440182073B

United States
Environmental Protection
Agency

Effluent Guidelines Division
WH-552
Washington DC 20460

EPA
November 1982

KAD

Water and Waste Management

EPA

Development Document for Effluent Limitations Guidelines and Standards for the Aluminum Forming

Proposed

Point Source Category

MC-II

DEVELOPMENT DOCUMENT

for

EFFLUENT LIMITATIONS GUIDELINES AND STANDARDS

for the

ALUMINUM FORMING POINT SOURCE CATEGORY

Anne M. Gorsuch
Administrator

Frederick A. Eidsness
Assistant Administrator for Water

Steven Schatzow
Director
Office of Water Regulations and Standards

Jeffery D. Denit, Director
Effluent Guidelines Division

Ernst P. Hall, P.E., Chief
Metals and Machinery Branch

Janet K. Goodwin
Technical Project Officer

November 1982

U.S. Environmental Protection Agency
Office of Water
Office of Water Regulations and Standards
Effluent Guidelines Division
Washington, D.C. 20460

TABLE OF CONTENTS

Section		Page
I	SUMMARY AND CONCLUSIONS	1
II	RECOMMENDATIONS	5
	BPT MASS LIMITATIONS FOR THE ROLLING WITH NEAT OILS SUBCATEGORY	5
	BPT MASS LIMITATIONS FOR THE ROLLING WITH EMULSIONS SUBCATEGORY	8
	BPT MASS LIMITATIONS FOR THE EXTRUSION SUBCATEGORY	10
	BPT MASS LIMITATIONS FOR THE DRAWING WITH NEAT OILS SUBCATEGORY	12
	BPT MASS LIMITATIONS FOR THE DRAWING WITH EMULSIONS OR SOAPS SUBCATEGORY.	14
	BAT MASS LIMITATIONS FOR THE ROLLING WITH NEAT OILS SUBCATEGORY	17
	BAT MASS LIMITATIONS FOR THE ROLLING WITH EMULSIONS SUBCATEGORY	18
	BAT MASS LIMITATIONS FOR THE EXTRUSION SUBCATEGORY	20
	BAT MASS LIMITATIONS FOR THE DRAWING WITH NEAT OILS SUBCATEGORY	21
	BAT MASS LIMITATIONS FOR THE DRAWING WITH EMULSIONS OR SOAPS SUBCATEGORY.	23
	NSPS FOR THE ROLLING WITH NEAT OILS SUBCATEGORY	24
	NSPS FOR THE ROLLING WITH EMULSIONS SUBCATEGORY	26
	NSPS FOR THE EXTRUSION SUBCATEGORY.	28
	NSPS FOR THE FORGING SUBCATEGORY.	30

TABLE OF CONTENTS (Continued)

Section		Page
II	NSPS FOR THE DRAWING WITH NEAT OILS SUBCATEGORY	31
	NSPS FOR THE DRAWING WITH EMULSIONS OR SOAPS SUBCATEGORY	33
	PSES FOR THE ROLLING WITH NEAT OILS SUBCATEGORY	36
	PSES FOR THE ROLLING WITH EMULSIONS SUBCATEGORY	38
	PSES FOR THE EXTRUSION SUBCATEGORY	40
	PSES FOR THE FORGING SUBCATEGORY	41
	PSES FOR THE DRAWING WITH NEAT OILS SUBCATEGORY	43
	PSES FOR THE DRAWING WITH EMULSIONS OR SOAPS SUBCATEGORY	45
	PSNS FOR THE ROLLING WITH NEAT OILS SUBCATEGORY	47
	PSNS FOR THE ROLLING WITH EMULSIONS SUBCATEGORY	49
	PSNS FOR THE EXTRUSION SUBCATEGORY	51
	PSNS FOR THE FORGING SUBCATEGORY	53
	PSNS FOR THE DRAWING WITH NEAT OILS SUBCATEGORY	54
	PSNS FOR THE DRAWING WITH EMULSIONS OR SOAPS SUBCATEGORY	56
	ALTERNATE BAT MASS LIMITATIONS FOR THE ROLLING WITH NEAT OILS SUBCATEGORY	59

TABLE OF CONTENTS (Continued)

Section		Page
II	ALTERNATE BAT MASS LIMITATIONS FOR THE ROLLING WITH EMULSIONS SUBCATEGORY	60
	ALTERNATE BAT MASS LIMITATIONS FOR THE EXTRUSION SUBCATEGORY.	62
	ALTERNATE BAT MASS LIMITATIONS FOR THE DRAWING WITH NEAT OILS SUBCATEGORY	63
	ALTERNATE BAT MASS LIMITATIONS FOR THE DRAWING WITH EMULSIONS OR SOAPS SUBCATEGORY. .	65
	ALTERNATE PSES FOR THE ROLLING WITH NEAT OILS SUBCATEGORY.	66
	ALTERNATE PSES FOR THE ROLLING WITH EMULSIONS SUBCATEGORY.	68
	ALTERNATE PSES FOR THE EXTRUSION SUBCATEGORY .	70
	ALTERNATE PSES FOR THE FORGING SUBCATEGORY . .	72
	ALTERNATE PSES FOR THE DRAWING WITH NEAT OILS SUBCATEGORY.	73
	ALTERNATE PSES FOR THE DRAWING WITH EMULSIONS OR SOAPS SUBCATEGORY	75
III	INTRODUCTION	79
	PURPOSE AND AUTHORITY.	79
	METHODOLOGY.	81
	Approach of Study.	81
	Data Collection and Methods of Evaluation. . .	81
	Literature Review.	81
	Existing Data.	82
	Data Collection Portfolios	82
	GENERAL PROFILE OF THE ALUMINUM FORMING CATEGORY	84

TABLE OF CONTENTS (Continued)

Section		Page
III	ALUMINUM FORMING PROCESSES	87
	CORE OPERATIONS	88
	Rolling	88
	Extrusion	90
	Forging	91
	Drawing	93
	Sawing	93
	Swaging	94
	ANCILLARY OPERATIONS	94
	Casting	94
	Direct Chill Casting	96
	Continuous Casting	97
	Stationary Casting	99
	Heat Treatment	99
	Cleaning and Etching	102
	Solvent Cleaning	103
	Alkaline and Acid Cleaning	104
	Chemical and Electrochemical Brightening	104
	Etching	105
	Desmutting and Deoxidizing	105
	Anodizing	105
	Chemical Conversion Coating	106
IV	INDUSTRY SUBCATEGORIZATION	123
	SUBCATEGORIZATION BASIS	123
	Factors Considered	123
	Subcategorization Factors Considered	124
	Raw Materials	125
	Manufacturing Processes	125
	Wastewater Characteristics and Treatment Technologies	126
	Products Manufactured	126
	Process Water Use	127
	Size	128
	Age	128
	Unique Plant Characteristics	128
	Location	128
	Unit Operations	129
	Subcategory Selection	130

TABLE OF CONTENTS (Continued)

Section		Page
IV	Raw Materials	130
	Manufacturing Processes	131
	Wastewater Characteristics	131
	Products Manufactured	131
	Process Water Use	132
	Size	132
	Age	132
	Location	132
	Unit Operations	132
	Production Normalizing Parameter	134
	Mass of Aluminum Processed	134
	Number of End Products Processed	135
	Surface Area of Aluminum Processed	135
	Mass of Process Chemicals Used	135
	Selection of Production Normalizing Parameter	135
	DESCRIPTION OF SELECTED SUBCATEGORIES	136
	Subcategory Terminology and Usage	136
	Rolling with Neat Oils Subcategory	138
	Rolling with Emulsions Subcategory	141
	Extrusion Subcategory	144
	Forging Subcategory	146
	Drawing with Neat Oils Subcategory	148
	Drawing with Emulsions or Soaps Subcategory	150
V	WATER USE AND WASTEWATER CHARACTERISTICS	153
	DATA SOURCES	153
	Historical Data	153
	Data Collection Portfolios	153
	Sampling and Analysis Program	155
	Site Selection	155
	Field Sampling	155
	Sample Collection, Preservation, and Transportation	156
	Sample Analysis	158
	Quality Control	161
	WATER USE AND WASTEWATER CHARACTERISTICS	161
	CORE OPERATIONS ASSOCIATED WITH MAJOR FORMING PROCESSES	162

TABLE OF CONTENTS (Continued)

Section		Page
V	Rolling	162
	Rolling with Neat Oils Spent Lubricant	162
	Rolling with Emulsions Spent Emulsion	162
	Roll Grinding Spent Emulsion	163
	Extrusion	163
	Extrusion Die Cleaning Bath	163
	Extrusion Die Cleaning Rinse	164
	Extrusion Die Cleaning Scrubber Liquor	165
	Extrusion Press Scrubber Liquor	165
	Extrusion Dummy Block Contact Cooling Water	165
	Forging	166
	Drawing	166
	Drawing with Neat Oils Spent Lubricant	166
	Drawing with Emulsions or Soaps Spent Emulsion	166
	Swaging	167
	CORE OPERATIONS NOT ASSOCIATED WITH SPECIFIC MAJOR FORMING PROCESSES	167
	Sawing Spent Lubricant	167
	Degreasing Spent Solvents	167
	Annealing Atmosphere Scrubber Liquor	168
	ANCILLARY OPERATIONS	168
	Heat Treatment	168
	Solution and Press Heat Treatment Contact Cooling Water	168
	Cleaning or Etching Bath	169
	Cleaning or Etching Rinse	170
	Cleaning or Etching Scrubber Liquor	171
	Forging Scrubber Liquor	171
	Casting	171
	Direct Chill Casting Contact Cooling Water	171
	Continuous Rod Casting Contact Cooling Water	172
	Continuous Rod Casting Spent Lubricant	173
	Continuous Sheet Casting Spent Lubricant	173
	Stationary Casting	174
	Degassing Scrubber Liquor	174
	Additional Wastewater Samples	174
	Treated Wastewater Samples	174

TABLE OF CONTENTS (Continued)

Section		Page
VI	SELECTION OF POLLUTANT PARAMETERS	437
	RATIONALE FOR SELECTION OF POLLUTANT PARAMETERS	438
	DESCRIPTION OF POLLUTANT PARAMETERS	439
	POLLUTANT SELECTION FOR CORE WASTE STREAMS. . .	504
	Rolling with Neat Oils Core Waste Streams . . .	504
	Rolling with Emulsions Core Waste Streams . . .	512
	Extrusion Core Waste Streams.	519
	Forging Core Waste Streams.	528
	Drawing with Neat Oils Core Waste Streams . . .	535
	Drawing with Emulsions or Soaps Core Waste Streams	543
	POLLUTANT SELECTION FOR ANCILLARY WASTE STREAMS	551
	Direct Chill Casting Contact Cooling Water. . .	551
	Continuous Rod Casting Contact Cooling Water. .	551
	Continuous Sheet Casting Spent Lubricants . . .	558
	Continous Rod Casting Spent Lubricants.	558
	Forging Scrubber Liquor	565
	Solution and Press Heat Treatment Contact Cooling Water	570
	Cleaning or Etching Bath.	577
	Cleaning or Etching Rinse	583
	Cleaning or Etching Scrubber Liquor	590
	Degassing Scrubber Liquor	593
VII	CONTROL AND TREATMENT TECHNOLOGY.	605
	END-OF-PIPE TREATMENT TECHNOLOGIES.	605
	MAJOR TECHNOLOGIES.	606
	Chemical Reduction of Chromium.	606
	Chemical Precipitation.	608
	Cyanide Precipitation	614
	Granular Bed Filtration	615
	Pressure Filtration	619
	Settling.	621
	Skimming.	623

TABLE OF CONTENTS (Continued)

Section		Page
VII	Chemical Emulsion Breaking	627
	Thermal Emulsion Breaking	629
	MAJOR TECHNOLOGY EFFECTIVENESS	631
	L&S Performance - Combined Metals Data Base	631
	One-Day Effluent Values	632
	Average Effluent Values	635
	Application	637
	Additional Pollutants	638
	LS&F Performance	640
	Analysis of Treatment System Effectiveness	641
	MINOR TECHNOLOGIES	644
	Carbon Adsorption	644
	Flotation	646
	Centrifugation	648
	Coalescing	650
	Cyanide Oxidation by Chlorine	652
	Cyanide Oxidation by Ozone	653
	Cyanide Oxidation by Ozone with UV Radiation	654
	Cyanide Oxidation by Hydrogen Peroxide	655
	Evaporation	656
	Gravity Sludge Thickening	659
	Ion Exchange	660
	Insoluble Starch Xanthate	663
	Peat Adsorption	663
	Membrane Filtration	665
	Reverse Osmosis	667
	Sludge Bed Drying	670
	Ultrafiltration	672
	Vacuum Filtration	674
	IN-PLANT TECHNOLOGY	675
	Process Water Recycle	675
	Process Water Reuse	678
	Countercurrent Cascade Rinsing	679
	Regeneration of Chemical Baths	683
	Process Water Use Reduction	684
	Wastewater Segregation	685
	Lubricating Oil and Deoiling Solvent Recovery	685
	Dry Air Pollution Control Devices	686
	Good Housekeeping	688

TABLE OF CONTENTS (Continued)

Section		Page
VIII	COSTS, ENERGY, AND NONWATER QUALITY ASPECTS . .	757
	BASIS FOR COST ESTIMATION	757
	Sources of Cost Data.	757
	Determination of Costs.	757
	Cost Data Reliability	760
	TREATMENT TECHNOLOGIES AND RELATED COSTS. . . .	761
	Skimming.	761
	Chemical Emulsion Breaking.	762
	Dissolved Air Flotation	763
	Thermal Emulsion Breaking	763
	Multimedia Filtration	764
	pH Adjustment	764
	Lime and Settle (L&S)	765
	Hexavalent Chromium Reduction	766
	Cyanide Oxidation	767
	Cyanide Precipitation	768
	Activated Carbon Adsorption	771
	Vacuum Filtration	772
	Contractor Hauling.	772
	Countercurrent Cascade Rinsing.	773
	Regeneration of Chemical Baths.	773
	Flow Equalization	774
	Pumping	774
	Holding Tank.	775
	Recycle of Cooling Water.	775
	Enclosures.	776
	Cost Calculation Example.	776
	NONWATER QUALITY ASPECTS OF POLLUTION CONTROL .	780
	Air Pollution	781
	Solid Waste	781
	Consumptive Water Loss.	782
	Energy Requirements	783
IX	BEST PRACTICABLE CONTROL TECHNOLOGY CURRENTLY AVAILABLE	793
	TECHNICAL APPROACH TO BPT	793
	Regulated Pollutant Parameters.	797

TABLE OF CONTENTS (Continued)

Section		Page
IX	ROLLING WITH NEAT OILS SUBCATEGORY.	798
	Production Operations and Discharge Flows . . .	798
	Core Operations	799
	Ancillary Operations.	802
	Pollutants.	804
	Treatment Train	804
	Effluent Limitations.	805
	Benefits.	805
	ROLLING WITH EMULSIONS SUBCATEGORY.	806
	Production Operations and Discharge Flows . . .	806
	Core Operations	806
	Ancillary Operations.	808
	Pollutants.	809
	Treatment Train	810
	Effluent Limitations.	810
	Benefits.	810
	EXTRUSION SUBCATEGORY	811
	Production Operations and Discharge Flows . . .	811
	Core Operations	811
	Ancillary Operations.	813
	Pollutants.	814
	Treatment Train	815
	Effluent Limitations.	815
	Benefits.	815
	FORGING SUBCATEGORY	816
	Production Operations and Discharge Flows . . .	816
	Core Operations	816
	Ancillary Operations.	817
	Pollutants.	818
	Treatment Train	818
	Effluent Limitations.	819
	Benefits.	819
	DRAWING WITH NEAT OILS SUBCATEGORY.	819
	Production Operations and Discharge Flows . . .	819
	Core Operations	819
	Ancillary Operations.	821

TABLE OF CONTENTS (Continued)

Section		Page
IX	Pollutants	822
	Treatment Train	822
	Effluent Limitations	823
	Benefits	823
	DRAWING WITH EMULSIONS OR SOAPS SUBCATEGORY	823
	Production Operations and Discharge Flows	823
	Core Operations	824
	Ancillary Operations	826
	Pollutants	826
	Treatment Train	827
	Effluent Limitations	827
	Benefits	827
	APPLICATION OF REGULATIONS IN PERMITS	828
	Example 1	828
	Example 2	828
X	BEST AVAILABLE TECHNOLOGY ECONOMICALLY ACHIEVABLE	881
	TECHNICAL APPROACH TO BAT	881
	OPTION 1	883
	OPTION 2	884
	OPTION 3	885
	OPTION 4	886
	OPTION 5	886
	OPTION 6	887
	BAT OPTION SELECTION	887
	Industry Cost and Environmental Benefits of the Various Treatment Options	887
	Selected Option for BAT	889

TABLE OF CONTENTS (Continued)

Section		Page
X	REGULATED POLLUTANT PARAMETERS	891
	ROLLING WITH NEAT OILS SUBCATEGORY	893
	Discharge Flows	893
	Pollutants	895
	Treatment Train	895
	Effluent Limitations	895
	Benefits	895
	ROLLING WITH EMULSIONS SUBCATEGORY	896
	Discharge Flows	896
	Pollutants	896
	Treatment Train	896
	Effluent Limitations	897
	Benefits	897
	EXTRUSION SUBCATEGORY	897
	Discharge Flows	897
	Pollutants	898
	Treatment Train	899
	Effluent Limitations	899
	Benefits	899
	FORGING SUBCATEGORY	899
	Discharge Flows	899
	Pollutants	900
	Treatment Train	900
	Effluent Limitations	901
	Benefits	901
	DRAWING WITH NEAT OILS SUBCATEGORY	901
	Discharge Flows	901
	Pollutants	902
	Treatment Train	902
	Effluent Limitations	903
	Benefits	903

TABLE OF CONTENTS (Continued)

Section		Page
X	DRAWING WITH EMULSIONS OR SOAPS SUBCATEGORY . .	903
	Discharge Flows	903
	Pollutants.	904
	Treatment Train	904
	Effluent Limitations.	904
	Benefits.	905
XI	NEW SOURCE PERFORMANCE STANDARDS.	981
	TECHNICAL APPROACH TO NSPS.	981
	NSPS OPTION SELECTION	982
	Costs and Environmental Benefits of Treatment Options	983
	REGULATED POLLUTANT PARAMETERS.	983
	NEW SOURCE PERFORMANCE STANDARDS.	983
XII	PRETREATMENT STANDARDS.	1007
	DISCHARGE OF ALUMINUM FORMING WASTEWATERS TO A POTW.	1007
	TECHNICAL APPROACH TO PRETREATMENT.	1009
	PSES AND PSNS OPTION SELECTION.	1010
	Costs and Environmental Benefits of Treatment Options	1011
	REGULATED POLLUTANT PARAMETERS.	1011
	PRETREATMENT STANDARDS.	1012
XIII	BEST CONVENTIONAL POLLUTANT CONTROL TECHNOLOGY.	1071
XIV	ACKNOWLEDGEMENT	1073
XV	REFERENCES.	1075
XVI	GLOSSARY.	1089

LIST OF TABLES

Table		Page
III-1	PROFILE OF ALUMINUM FORMING PLANTS	108
III-2	PLANT AGE DISTRIBUTION BY DISCHARGE TYPE	110
III-3	DISTRIBUTION OF FACILITIES ACCORDING TO TIME ELAPSED SINCE LATEST MAJOR PLANT MODIFICATION. .	111
V-1	ROLLING WITH NEAT OILS SPENT LUBRICANTS.	196
V-2	FREQUENCY OF OCCURRENCE OF TOXIC POLLUTANTS ROLLING WITH NEAT OILS SPENT LUBRICANTS RAW WASTEWATER	197
V-3	SAMPLING DATA ROLLING WITH NEAT OILS SPENT LUBRICANTS RAW WASTEWATER.	201
V-4	ROLLING WITH EMULSIONS SPENT EMULSION.	203
V-5	FREQUENCY OF OCCURRENCE OF TOXIC POLLUTANTS ROLLING WITH EMULSIONS SPENT EMULSIONS RAW WASTEWATER	204
V-6	SAMPLING DATA ROLLING WITH EMULSIONS SPENT EMULSIONS RAW WASTEWATER	208
V-7	ROLL GRINDING SPENT LUBRICANT.	216
V-8	FREQUENCY OF OCCURRENCE OF TOXIC POLLUTANTS ROLL GRINDING SPENT LUBRICANT RAW WASTEWATER . .	217
V-9	SAMPLING DATA ROLL GRINDING SPENT EMULSION RAW WASTEWATER	221
V-10	EXTRUSION DIE CLEANING BATH.	222
V-11	EXTRUSION DIE CLEANING RINSE	223
V-12	FREQUENCY OF OCCURRENCE OF TOXIC POLLUTANTS EXTRUSION DIE CLEANING RINSE RAW WASTEWATER. . .	224
V-13	SAMPLING DATA EXTRUSION DIE CLEANING RINSE RAW WASTEWATER	228

LIST OF TABLES (Continued)

Table		Page
V-14	EXTRUSION DIE CLEANING SCRUBBER LIQUOR	231
V-15	FREQUENCY OF OCCURRENCE OF TOXIC POLLUTANTS EXTRUSION DIE CLEANING SCRUBBER LIQUOR RAW WASTEWATER	232
V-16	SAMPLING DATA EXTRUSION DIE CLEANING SCRUBBER LIQUOR RAW WASTEWATER.	236
V-17	EXTRUSION PRESS SCRUBBER LIQUOR.	237
V-18	FREQUENCY OF OCCURRENCE OF TOXIC POLLUTANTS EXTRUSION PRESS SCRUBBER LIQUOR RAW WASTEWATER .	238
V-19	SAMPLING DATA EXTRUSION PRESS SCRUBBER LIQUOR RAW WASTEWATER	242
V-20	EXTRUSION DUMMY BLOCK CONTACT COOLING WATER. . .	243
V-21	FREQUENCY OF OCCURRENCE OF TOXIC POLLUTANTS EXTRUSION DUMMY BLOCK CONTACT COOLING WATER RAW WASTEWATER	244
V-22	SAMPLING DATA EXTRUSION DUMMY BLOCK COOLING RAW WASTEWATER	248
V-23	DRAWING WITH NEAT OILS SPENT LUBRICANT	249
V-24	DRAWING WITH EMULSIONS OR SOAPS SPENT EMULSION .	250
V-25	FREQUENCY OF OCCURRENCE OF TOXIC POLLUTANTS DRAWING WITH EMULSIONS OR SOAPS SPENT EMULSION RAW WASTEWATER	251
V-26	SAMPLING DATA DRAWING WITH EMULSIONS OR SOAPS SPENT EMULSION RAW WASTEWATER.	255
V-27	SAWING SPENT LUBRICANT	256
V-28	FREQUENCY OF OCCURRENCE OF TOXIC POLLUTANTS DEGREASING SPENT SOLVENTS RAW WASTEWATER	257
V-29	SAMPLING DATA DEGREASING SPENT SOLVENTS RAW WASTEWATER	261

LIST OF TABLES (Continued)

Table		Page
V-30	ANNEALING ATMOSPHERE SCRUBBER LIQUOR	262
V-31	FREQUENCY OF OCCURRENCE OF TOXIC POLLUTANTS ANNEALING ATMOSPHERE SCRUBBER LIQUOR RAW WASTEWATER	263
V-32	SAMPLING DATA ANNEALING ATMOSPHERE SCRUBBER LIQUOR RAW WASTEWATER.	267
V-33	ROLLING SOLUTION HEAT TREATMENT CONTACT COOLING WATER.	268
V-34	FREQUENCY OF OCCURRENCE OF TOXIC POLLUTANTS ROLLING SOLUTION HEAT TREATMENT CONTACT COOLING WATER RAW WASTEWATER	269
V-35	SAMPLING DATA ROLLING SOLUTION HEAT TREATMENT CONTACT COOLING WATER RAW WASTEWATER	273
V-36	EXTRUSION PRESS HEAT TREATMENT CONTACT COOLING WATER.	276
V-37	FREQUENCY OF OCCURRENCE OF TOXIC POLLUTANTS EXTRUSION PRESS HEAT TREATMENT CONTACT COOLING WATER RAW WASTEWATER	277
V-38	SAMPLING DATA EXTRUSION PRESS HEAT TREATMENT CONTACT COOLING WATER RAW WASTEWATER	281
V-39	EXTRUSION SOLUTION HEAT TREATMENT CONTACT COOLING WATER.	287
V-40	FREQUENCY OF OCCURRENCE OF TOXIC POLLUTANTS EXTRUSION SOLUTION HEAT TREATMENT CONTACT COOLING WATER RAW WASTEWATER	288
V-41	SAMPLING DATA EXTRUSION SOLUTION HEAT TREATMENT CONTACT COOLING WATER RAW WASTEWATER	292
V-42	FORGING SOLUTION HEAT TREATMENT CONTACT COOLING WATER.	295
V-43	FREQUENCY OF OCCURRENCE OF TOXIC POLLUTANTS FORGING SOLUTION HEAT TREATMENT CONTACT COOLING WATER RAW WASTEWATER	296

LIST OF TABLES (Continued)

Table		Page
V-44	SAMPLING DATA FORGING SOLUTION HEAT TREATMENT CONTACT COOLING WATER RAW WASTEWATER	300
V-45	DRAWING SOLUTION HEAT TREATMENT CONTACT COOLING WATER.	305
V-46	FREQUENCY OF OCCURRENCE OF TOXIC POLLUTANTS DRAWING SOLUTION HEAT TREATMENT CONTACT COOLING WATER RAW WASTEWATER	306
V-47	SAMPLING DATA DRAWING SOLUTION HEAT TREATMENT CONTACT COOLING WATER RAW WASTEWATER	310
V-48	CLEANING OR ETCHING BATH	314
V-49	FREQUENCY OF OCCURRENCE OF TOXIC POLLUTANTS CLEANING OR ETCHING BATH RAW WASTEWATER.	315
V-50	SAMPLING DATA CLEANING OR ETCHING BATH RAW WASTEWATER	319
V-51	CLEANING OR ETCHING RINSE.	324
V-52	FREQUENCY OF OCCURRENCE OF TOXIC POLLUTANTS CLEANING OR ETCHING RINSE RAW WASTEWATER	325
V-53	SAMPLING DATA CLEANING OR ETCHING RINSE RAW WASTEWATER	329
V-54	CLEANING OR ETCHING SCRUBBER LIQUOR.	349
V-55	FREQUENCY OF OCCURRENCE OF TOXIC POLLUTANTS CLEANING OR ETCHING SCRUBBER LIQUOR RAW WASTE-WATER.	350
V-56	SAMPLING DATA CLEANING OR ETCHING SCRUBBER LIQUOR RAW WASTEWATER.	354
V-57	FORGING SCRUBBER LIQUOR.	355
V-58	FREQUENCY OF OCCURRENCE OF TOXIC POLLUTANTS FORGING SCRUBBER LIQUOR RAW WASTEWATER	356
V-59	SAMPLING DATA FORGING SCRUBBER LIQUOR RAW WASTEWATER	360

LIST OF TABLES (Continued)

Table		Page
V-60	DIRECT CHILL CASTING CONTACT COOLING WATER (ALUMINUM FORMING PLANTS)	362
V-61	DIRECT CHILL CASTING CONTACT COOLING WATER (PRIMARY ALUMINUM PLANTS)	364
V-62	FREQUENCY OF OCCURRENCE OF TOXIC POLLUTANTS DIRECT CHILL CASTING CONTACT COOLING WATER RAW WASTEWATER.	365
V-63	SAMPLING DATA DIRECT CHILL CASTING CONTACT CONTACT COOLING WATER RAW WASTEWATER	369
V-64	CONTINUOUS ROD CASTING CONTACT COOLING WATER . .	383
V-65	CONTINUOUS ROD CASTING SPENT LUBRICANT	384
V-66	CONTINUOUS SHEET CASTING SPENT LUBRICANT	385
V-67	DEGASSING SCRUBBER LIQUOR (PRIMARY ALUMINUM PLANTS).	386
V-68	FREQUENCY OF OCCURRENCE OF TOXIC POLLUTANTS DEGASSING SCRUBBER LIQUOR RAW WASTEWATER	387
V-69	SAMPLING DATA DEGASSING SCRUBBER LIQUOR RAW WASTEWATER	391
V-70	SAMPLING DATA ADDITIONAL WASTEWATER RAW WASTE-WATER.	392
V-71	SAMPLING DATA PLANT B TREATED WASTEWATER	401
V-72	SAMPLING DATA PLANT C TREATED WASTEWATER	405
V-73	SAMPLING DATA PLANT D TREATED WASTEWATER	406
V-74	SAMPLING DATA PLANT E TREATED WASTEWATER	411
V-75	SAMPLING DATA PLANT H TREATED WASTEWATER	419
V-76	SAMPLING DATA PLANT J TREATED WASTEWATER	421
V-77	SAMPLING DATA PLANT K TREATED WASTEWATER	423

LIST OF TABLES (Continued)

Table		Page
V-78	SAMPLING DATA PLANT L TREATED WASTEWATER	425
V-79	SAMPLING DATA PLANT P TREATED WASTEWATER	426
V-80	SAMPLING DATA PLANT Q TREATED WASTEWATER	428
V-81	SAMPLING DATA PLANT U TREATED WASTEWATER	430
V-82	SAMPLING DATA PLANT V TREATED WASTEWATER	434
VI-1	LIST OF 129 TOXIC POLLUTANTS	598
VII-1	pH CONTROL EFFECT ON METALS REMOVAL.	728
VII-2	EFFECTIVENESS OF SODIUM HYDROXIDE FOR METALS REMOVAL.	729
VII-3	EFFECTIVENESS OF LIME AND SODIUM HYDROXIDE FOR METALS REMOVAL	730
VII-4	THEORETICAL SOLUBILITIES OF HYDROXIDES AND SULFIDES OF SELECTED METALS IN PURE WATER. . . .	731
VII-5	SAMPLING DATA FROM SULFIDE PRECIPITATION-SEDIMENTATION SYSTEMS.	732
VII-6	SULFIDE PRECIPITATION-SEDIMENTATION PERFORMANCE.	733
VII-7	FERRITE CO-PRECIPITATION PERFORMANCE	734
VII-8	CONCENTRATION OF TOTAL CYANIDE (mg/l).	735
VII-9	MULTIMEDIA FILTER PERFORMANCE.	736
VII-10	PERFORMANCE OF SELECTED SETTLING SYSTEMS	737
VII-11	SKIMMING PERFORMANCE	738
VII-12	TRACE ORGANIC REMOVAL BY SKIMMING API PLUS BELT SKIMMERS.	739
VII-13	CHEMICAL EMULSION BREAKING EFFICIENCIES.	740

LIST OF TABLES (Continued)

Table		Page
VII-14	COMBINED METALS DATA EFFLUENT VALUES.	741
VII-15	L&S PERFORMANCE ADDITIONAL POLLUTANTS	742
VII-16	COMBINED METALS DATA SET - UNTREATED WASTE-WATER	743
VII-17	MAXIMUM POLLUTANT LEVEL IN UNTREATED WASTE-WATER ADDITIONAL POLLUTANTS	744
VII-18	PRECIPITATION-SETTLING-FILTRATION (LS&F) PERFORMANCE PLANT A	745
VII-19	PRECIPITATION-SETTLING-FILTRATION (LS&F) PERFORMANCE PLANT B	746
VII-20	PRECIPITATION-SETTLING-FILTRATION (LS&F) PERFORMANCE PLANT C	747
VII-21	SUMMARY OF TREATMENT EFFECTIVENESS (mg/l) . . .	748
VII-22	TREATABILITY RATING OF PRIORITY POLLUTANTS UTILIZING CARBON ADSORPTION	749
VII-23	CLASSES OF ORGANIC COMPOUNDS ADSORBED ON CARBON.	750
VII-24	ACTIVATED CARBON PERFORMANCE.	751
VII-25	ION EXCHANGE PERFORMANCE.	752
VII-26	PEAT ADSORPTION PERFORMANCE	753
VII-27	MEMBRANE FILTRATON SYSTEM EFFLUENT.	754
VII-28	ULTRAFILTRATION PERFORMANCE	755
VIII-1	COST EQUATIONS FOR RECOMMENDED TREATMENT AND CONTROL TECHNOLOGIES.	784
VIII-2	OILY SLUDGE PRODUCTION ASSOCIATED WITH ALUMINUM FORMING.	789
VIII-3	LIME DOSAGE REQUIREMENTS AND LIME SLUDGE PRODUCTION ASSOCIATED WITH ALUMINUM FORMING . .	790

LIST OF TABLES (Continued)

Table		Page
VIII-4	CARBON EXHAUSTION RATES ASSOCIATED WITH ALUMINUM FORMING.	791
IX-1	PRODUCTION OPERATIONS - ROLLING WITH NEAT OILS SUBCATEGORY.	830
IX-2	COMPARISON OF WASTEWATER DISCHARGE RATES FROM CLEANING OR ETCHING RINSE STREAMS	832
IX-3	CONCENTRATION RANGE OF POLLUTANTS CONSIDERED FOR BPT REGULATION IN CORE AND ANCILLARY WASTE STREAMS - ROLLING WITH NEAT OILS SUBCATEGORY. .	833
IX-4	BPT MASS LIMITATIONS FOR THE ROLLING WITH NEAT OILS SUBCATEGORY	836
IX-5	PRODUCTION OPERATIONS - ROLLING WITH EMULSIONS SUBCATEGORY	840
IX-6	CONCENTRATION RANGE OF POLLUTANTS CONSIDERED FOR BPT REGULATION IN CORE AND ANCILLARY WASTE STREAMS - ROLLING WITH EMULSIONS SUBCATEGORY. .	841
IX-7	BPT MASS LIMITATIONS FOR THE ROLLING WITH EMULSIONS SUBCATEGORY	844
IX-8	PRODUCTION OPERATIONS - EXTRUSION SUBCATEGORY .	847
IX-9	CONCENTRATION RANGE OF POLLUTANTS CONSIDERED FOR BPT REGULATION IN CORE AND ANCILLARY WASTE STREAMS - EXTRUSION SUBCATEGORY	848
IX-10	BPT MASS LIMITATIONS FOR THE EXTRUSION SUBCATEGORY.	851
IX-11	PRODUCTION OPERATIONS - FORGING SUBCATEGORY . .	855
IX-12	CONCENTRATION RANGE OF POLLUTANTS CONSIDERED FOR BPT REGULATION IN CORE AND ANCILLARY WASTE STREAMS - FORGING SUBCATEGORY	856
IX-13	BPT MASS LIMITATIONS FOR THE FORGING SUBCATEGORY.	859

LIST OF TABLES (Continued)

Table		Page
IX-14	PRODUCTION OPERATIONS - DRAWING WITH NEAT OILS SUBCATEGORY	862
IX-15	CONCENTRATION RANGE OF POLLUTANTS CONSIDERED FOR BPT REGULATION IN CORE AND ANCILLARY WASTE STREAMS - DRAWING WITH NEAT OILS SUBCATEGORY. .	863
IX-16	BPT MASS LIMITATIONS FOR THE DRAWING WITH NEAT OILS SUBCATEGORY	866
IX-17	PRODUCTION OPERATIONS - DRAWING WITH EMULSIONS OR SOAPS SUBCATEGORY.	870
IX-18	COMPARISON OF WASTEWATER DISCHARGE RATES FROM DRAWING EMULSION AND SOAP STREAMS	871
IX-19	CONCENTRATION RANGE OF POLLUTANTS CONSIDERED FOR BPT REGULATION IN CORE AND ANCILLARY WASTE STREAMS - DRAWING WITH EMULSIONS OR SOAPS SUBCATEGORY.	872
IX-20	BPT MASS LIMITATIONS FOR THE DRAWING WITH EMULSIONS OR SOAPS SUBCATEGORY.	875
IX-21	ALLOWABLE DISCHARGE CALCULATIONS FOR PLANT X IN EXAMPLE 1.	879
IX-22	ALLOWABLE DISCHARGE CALCULATIONS FOR PLANT Y IN EXAMPLE 2.	880
X-1	CAPITAL AND ANNUAL COSTS ESTIMATES FOR BAT OPTIONS TOTAL SUBCATEGORY	912
X-2	CAPITAL AND ANNUAL COSTS ESTIMATES FOR BAT OPTIONS DIRECT DISCHARGERS.	913
X-3	TOTAL TREATMENT PERFORMANCE ROLLING WITH NEAT OILS SUBCATEGORY.	914
X-4	TOTAL TREATMENT PERFORMANCE ROLLING WITH EMULSIONS SUBCATEGORY	916
X-5	TOTAL TREATMENT PERFORMANCE EXTRUSION SUBCATEGORY.	918

LIST OF TABLES (Continued)

Table		Page
X-6	TOTAL TREATMENT PERFORMANCE FORGING SUBCATEGORY.	920
X-7	TOTAL TREATMENT PERFORMANCE DRAWING WITH NEAT OILS SUBCATEGORY.	922
X-8	TOTAL TREATMENT PERFORMANCE DRAWING WITH EMULSIONS OR SOAPS SUBCATEGORY.	924
X-9	TREATMENT PERFORMANCE - DIRECT DISCHARGERS ROLLING WITH NEAT OILS SUBCATEGORY.	926
X-10	TREATMENT PERFORMANCE - DIRECT DISCHARGERS ROLLING WITH EMULSIONS SUBCATEGORY.	928
X-11	TREATMENT PERFORMANCE - DIRECT DISCHARGERS EXTRUSION SUBCATEGORY	930
X-12	TREATMENT PERFORMANCE - DIRECT DISCHARGERS DRAWING WITH NEAT OILS SUBCATEGORY.	932
X-13	TREATMENT PERFORMANCE - DIRECT DISCHARGERS DRAWING WITH EMULSIONS OR SOAPS SUBCATEGORY . .	934
X-14	TREATMENT PERFORMANCE - NORMAL PLANT ROLLING WITH NEAT OIL SUBCATEGORY	936
X-15	TREATMENT PERFORMANCE - NORMAL PLANT ROLLING WITH EMULSIONS SUBCATEGORY.	938
X-16	TREATMENT PERFORMANCE - NORMAL PLANT EXTRUSION SUBCATEGORY	940
X-17	TREATMENT PERFORMANCE - NORMAL PLANT FORGING SUBCATEGORY	942
X-18	TREATMENT PERFORMANCE - NORMAL PLANT DRAWING WITH NEAT OILS SUBCATEGORY.	944
X-19	TREATMENT PERFORMANCE - NORMAL PLANT DRAWING WITH EMULSIONS OR SOAPS SUBCATEGORY	946
X-20	PRODUCTION NORMALIZED RAW WASTE VALUES AND CONCENTRATIONS FOR ALUMINUM FORMING WASTEWATER STREAMS	948

LIST OF TABLES (Continued)

Table		Page
X-21	TTO - EVALUATION OF OIL TREATMENT EFFECTIVENESS ON TOXICS REMOVAL.	951
X-22	PRODUCTION OPERATIONS - ROLLING WITH NEAT OILS SUBCATEGORY.	952
X-23	BAT MASS LIMITATIONS FOR THE ROLLING WITH NEAT OILS SUBCATEGORY	954
X-24	PRODUCTION OPERATIONS - ROLLING WITH EMULSIONS SUBCATEGORY	958
X-25	BAT MASS LIMITATIONS FOR THE ROLLING WITH EMULSIONS SUBCATEGORY	959
X-26	PRODUCTION OPERATIONS - EXTRUSION SUBCATEGORY .	962
X-27	BAT MASS LIMITATIONS FOR THE EXTRUSION SUBCATEGORY.	963
X-28	PRODUCTION OPERATIONS - FORGING SUBCATEGORY . .	967
X-29	BAT MASS LIMITATIONS FOR THE FORGING SUBCATEGORY.	968
X-30	PRODUCTION OPERATIONS - DRAWING WITH NEAT OILS SUBCATEGORY.	971
X-31	BAT MASS LIMITATIONS FOR THE DRAWING WITH NEAT OILS SUBCATEGORY	972
X-32	PRODUCTION OPERATIONS - DRAWING WITH EMULSIONS OR SOAPS SUBCATEGORY.	976
X-33	BAT MASS LIMITATIONS FOR THE DRAWING WITH EMULSIONS OR SOAPS SUBCATEGORY.	977
XI-1	NSPS FOR THE ROLLING WITH NEAT OILS SUBCATEGORY	985
XI-2	NSPS FOR THE ROLLING WITH EMULSIONS SUBCATEGORY	989
XI-3	NSPS FOR THE EXTRUSION SUBCATEGORY.	992

LIST OF TABLES (Continued)

Table		Page
XI-4	NSPS FOR THE FORGING SUBCATEGORY.	996
XI-5	NSPS FOR THE DRAWING WITH NEAT OILS SUBCATEGORY	999
XI-6	NSPS FOR THE DRAWING WITH EMULSIONS OR SOAPS SUBCATEGORY	1003
XII-1	CAPITAL AND ANNUAL COST ESTIMATES FOR BAT OPTIONS INDIRECT DISCHARGERS.	1014
XII-2	TREATMENT PERFORMANCE - INDIRECT DISCHARGERS ROLLING WITH NEAT OILS SUBCATEGORY.	1015
XII-3	TREATMENT PERFORMANCE - INDIRECT DISCHARGERS ROLLING WITH EMULSIONS SUBCATEGORY.	1017
XII-4	TREATMENT PERFORMANCE - INDIRECT DISCHARGERS EXTRUSION SUBCATEGORY	1019
XII-5	TREATMENT PERFORMANCE - INDIRECT DISCHARGERS FORGING SUBCATEGORY	1021
XII-6	TREATMENT PERFORMANCE - INDIRECT DISCHARGERS DRAWING WITH NEAT OILS SUBCATEGORY.	1023
XII-7	TREATMENT PERFORMANCE - INDIRECT DISCHARGERS DRAWING WITH EMULSIONS OR SOAPS SUBCATEGORY . .	1025
XII-8	PSES FOR THE ROLLING WITH NEAT OILS SUBCATEGORY	1027
XII-9	PSES FOR THE ROLLING WITH EMULSIONS SUBCATEGORY	1031
XII-10	PSES FOR THE EXTRUSION SUBCATEGORY.	1034
XII-11	PSES FOR THE FORGING SUBCATEGORY.	1038
XII-12	PSES FOR THE DRAWING WITH NEAT OILS SUBCATEGORY	1041

LIST OF TABLES (Continued)

Table		Page
XII-13	PSES FOR THE DRAWING WITH EMULSIONS OR SOAPS SUBCATEGORY	1045
XII-14	PSNS FOR THE ROLLING WITH NEAT OILS SUBCATEGORY	1049
XII-15	PSNS FOR THE ROLLING WITH EMULSIONS SUBCATEGORY	1053
XII-16	PSNS FOR THE EXTRUSION SUBCATEGORY.	1056
XII-17	PSNS FOR THE FORGING SUBCATEGORY.	1060
XII-18	PSNS FOR THE DRAWING WITH NEAT OILS SUBCATEGORY	1063
XII-19	PSNS FOR THE DRAWING WITH EMULSIONS OR SOAPS SUBCATEGORY	1067

LIST OF FIGURES

Figure		Page
III-1	ALUMINUM FORMING PRODUCTS	107
III-2	GEOGRAPHICAL DISTRIBUTION OF ALUMINUM FORMING PLANTS.	109
III-3	COMMON ROLLING MILL CONFIGURATIONS.	112
III-4	GEOGRAPHICAL DISTRIBUTION OF PLANTS WITH HOT/COLD ROLLING.	113
III-5	DIRECT EXTRUSION.	114
III-6	GEOGRAPHICAL DISTRIBUTION OF PLANTS WITH EXTRUSION	115
III-7	FORGING	116
III-8	GEOGRAPHICAL DISTRIBUTION OF PLANTS WITH FORGING	117
III-9	TUBE DRAWING.	118
III-10	GEOGRAPHICAL DISTRIBUTION OF PLANTS WITH TUBE, WIRE, ROD AND BAR DRAWING	119
III-11	DIRECT CHILL CASTING.	120
III-12	CONTINUOUS CASTING.	121
III-13	VAPOR DEGREASING.	122
V-1	WASTEWATER SOURCES AT PLANT A	176
V-2	WASTEWATER SOURCES AT PLANT B	177
V-3	WASTEWATER SOURCES AT PLANT C	178
V-4	WASTEWATER SOURCES AT PLANT D	179
V-5	WASTEWATER SOURCES AT PLANT E	180
V-6	WASTEWATER SOURCES AT PLANT F	181
V-7	WASTEWATER SOURCES AT PLANT G	182

LIST OF FIGURES (Continued)

Figure		Page
V-8	WASTEWATER SOURCES AT PLANT H	183
V-9	WASTEWATER SOURCES AT PLANT J	184
V-10	WASTEWATER SOURCES AT PLANT K	185
V-11	WASTEWATER SOURCES AT PLANT L	186
V-12	WASTEWATER SOURCES AT PLANT N	187
V-13	WASTEWATER SOURCES AT PLANT P	188
V-14	WASTEWATER SOURCES AT PLANT Q	189
V-15	WASTEWATER SOURCES AT PLANT R	190
V-16	WASTEWATER SOURCES AT PLANT S	191
V-17	WASTEWATER SOURCES AT PLANT T	192
V-18	WASTEWATER SOURCES AT PLANT U	193
V-19	WASTEWATER SOURCES AT PLANT V	194
V-20	WASTEWATER SOURCES AT PLANT W	195
VII-1	HEXAVALENT CHROMIUM REDUCTION WITH SULFUR DIOXIDE	689
VII-2	COMPARATIVE SOLUBILITIES OF METAL HYDROXIDES AND SULFIDE AS A FUNCTION OF pH	690
VII-3	EFFLUENT ZINC CONCENTRATION VS. MINIMUM EFFLUENT pH	691
VII-4	LEAD SOLUBILITY IN THREE ALKALIES	692
VII-5	FILTER CONFIGURATIONS	693
VII-6	GRANULAR BED FILTRATION	694
VII-7	PRESSURE FILTRATION	695
VII-8	REPRESENTATIVE TYPES OF SEDIMENTATION	696

LIST OF FIGURES (Continued)

Figure		Page
VII-9	GRAVITY OIL/WATER SEPARATOR	697
VII-10	FLOW DIAGRAM FOR EMULSION BREAKING WITH CHEMICALS	698
VII-11	HYDROXIDE PRECIPITATION SEDIMENTATION EFFECTIVENESS CADMIUM.	699
VII-12	HYDROXIDE PRECIPITATION SEDIMENTATION EFFECTIVENESS CHROMIUM	700
VII-13	HYDROXIDE PRECIPITATION SEDIMENTATION EFFECTIVENESS COPPER	701
VII-14	HYDROXIDE PRECIPITATION SEDIMENTATION EFFECTIVENESS LEAD	702
VII-15	HYDROXIDE PRECIPITATION SEDIMENTATION EFFECTIVENESS NICKEL AND ALUMINUM.	703
VII-16	HYDROXIDE PRECIPITATION SEDIMENTATION EFFECTIVENESS ZINC	704
VII-17	HYDROXIDE PRECIPITATION SEDIMENTATION EFFECTIVENESS IRON	705
VII-18	HYDROXIDE PRECIPITATION SEDIMENTATION EFFECTIVENESS MANGANESE.	706
VII-19	HYDROXIDE PRECIPITATION SEDIMENTATION EFFECTIVENESS TSS.	707
VII-20	FLOW DIAGRAM OF ACTIVATED CARBON ADSORPTION WITH REGENERATION	708
VII-21	ACTIVATED CARBON ADSORPTION COLUMN.	709
VII-22	DISSOLVED AIR FLOTATION	710
VII-23	CENTRIFUGATION.	711
VII-24	TREATMENT OF CYANIDE WASTE BY ALKALINE CHLORINATION.	712
VII-25	TYPICAL OZONE PLANT FOR WASTE TREATMENT	713

LIST OF FIGURES (Continued)

Figure		Page
VII-26	UV/OZONATION.	714
VII-27	TYPES OF EVAPORATION EQUIPMENT.	715
VII-28	GRAVITY THICKENING.	716
VII-29	ION EXCHANGE WITH REGENERATION.	717
VII-30	SIMPLIFIED REVERSE OSMOSIS SCHEMATIC.	718
VII-31	REVERSE OSMOSIS MEMBRANE CONFIGURATIONS	719
VII-32	SLUDGE DRYING BED	720
VII-33	SIMPLIFIED ULTRAFILTRATION FLOW SCHEMATIC . . .	721
VII-34	FLOW DIAGRAM FOR A BATCH TREATMENT ULTRA-FILTRATION SYSTEM	722
VII-35	VACUUM FILTRATION	723
VII-36	FLOW DIAGRAM FOR RECYCLING WITH A COOLING TOWER	724
VII-37	COUNTERCURRENT RINSING (TANKS).	725
VII-38	EFFECT OF ADDED RINSE STAGES ON WATER USE . . .	726
VII-39	SCHEMATIC DIAGRAM OF SPINNING NOZZLE ALUMINUM REFINING PROCESS.	727
IX-1	BPT TREATMENT TRAIN FOR THE ROLLING WITH NEAT OILS SUBCATEGORY	835
IX-2	BPT TREATMENT TRAIN FOR THE ROLLING WITH EMUL-SIONS SUBCATEGORY.	843
IX-3	BPT TREATMENT TRAIN FOR THE EXTRUSION SUBCATE-GORY	850
IX-4	BPT TREATMENT TRAIN FOR THE FORGING SUBCATEGORY.	858
IX-5	BPT TREATMENT TRAIN FOR THE DRAWING WITH NEAT OILS SUBCATEGORY	865

LIST OF FIGURES (Continued)

Figure		Page
IX-6	BPT TREATMENT TRAIN FOR THE DRAWING WITH EMULSIONS OR SOAPS SUBCATEGORY	874
X-1	BAT TREATMENT TRAIN FOR OPTION 1	906
X-2	BAT TREATMENT TRAIN FOR OPTION 2	907
X-3	BAT TREATMENT TRAIN FOR OPTION 3	908
X-4	BAT TREATMENT TRAIN FOR OPTION 4	909
X-5	BAT TREATMENT TRAIN FOR OPTION 5	910
X-6	BAT TREATMENT TRAIN FOR OPTION 6	911

SECTION I

SUMMARY AND CONCLUSIONS

Pursuant to Sections 301, 304, 306, 307, and 501 of the Clean Water Act and the Settlement Agreement in Natural Resources Defense Council v. Train 8 ERC 2120 (D.D.C. 1976) modified 12 ERC 1833 (D.D.C. 1979), EPA has collected and analyzed data for plants in the Aluminum Forming Point Source Category. There are no existing effluent limitations or performance standards for this industry. This document and the administrative record provide the technical basis for proposing effluent limitations guidelines for existing direct dischargers, pretreatment standards for new and existing indirect dischargers, and standards of performance for new source direct dischargers.

Two hundred seventy-seven plants employing 28,500 people make up this category. Of the 277 plants, 58 discharge directly to rivers, lakes, or streams; 66 discharge to publicly owned treatment works (POTW); and 153 do not discharge process wastewater.

The Agency developed a data collection portfolio (dcp) to collect information regarding plant size, age, production, the production processes used, the quantity of process wastewater used and discharged, wastewater treatment in-place, and disposal practices at plants practicing aluminum forming. The dcp's were sent to 580 firms known or believed to perform aluminum forming, 95 percent of these firms responded.

EPA sampled the raw (untreated) and treated process wastewater at 20 aluminum forming plants. Screen sampling was performed at four facilities, each representing one of the major manufacturing processes of rolling, extruding, forging, and drawing. Samples were collected from wastewater sources associated with the major manufacturing processes, as well as any associated processes, including cleaning, etching, solution heat treatment, and annealing, among others. Each of the samples was analyzed to determine the presence or absence, and if present, the concentration of 129 toxic priority pollutants, plus conventional and selected nonconventional pollutants. The remaining 16 plants were sampled to verify the findings and strengthen the data base.

The Agency examined the rate of production and wastewater generation reported in the dcp's for each aluminum forming operation. These data combined with the wastewater characteristics determined during sampling became the principle bases for subcategorizing this category. Based on these data, the most appropriate

approach to subcategorizing this category is by the major manufacturing processes. In addition, a review of the use of lubricants in rolling and drawing showed that these operations needed to be segmented according to whether neat oils or soaps and emulsions are used. A neat oil is a pure oil which when spent of its lubricating properties, can be hauled to an oil reclaimer or used as fuel in the plant. Emulsions and soaps are mixtures of oils and water. When these lubricants are spent, plants can contract haul them to a disposal site, or treat them to remove the oil and discharge or reuse the water. The aluminum forming category is subcategorized based on manufacturing processes and wastewater characteristics, resulting in six subcategories: rolling with neat oils, rolling with emulsions, extrusion, forging, drawing with neat oils, and drawing with emulsions or soaps.

Each subcategory is divided into two segments. The first segment, called the core, consists of the specific forming operation and related operations that are an integral part of the forming process. The core also includes operations that may be found in conjunction with the forming operation but do not discharge wastewater. The effluent flow from the core for each of the subcategories is production normalized or related to the mass of aluminum processed through the forming operation, and the limitations at BPT and BAT are based on the effluent flow and the treatment effectiveness.

The second segment of each subcategory consists of ancillary operations that generate wastewater and when practiced are an integral part of the aluminum forming process. These ancillary operations, such as solution heat treatment, cleaning or etching, and casting, are practiced to achieve desired characteristics or finishes on the aluminum products and can be characterized by the generation of large volumes of wastewater. Because they are not found at every plant in a subcategory and they are not always unique to a specific subcategory, they are not included in the core. Instead, a separate limitation is proposed for the waste streams generated by these ancillary operations and normalized by the mass of aluminum processed through the ancillary operation. An aluminum forming plant would be permitted to discharge pollutants equivalent to the sum of the limitations established for the core and the ancillary operation(s) practiced at the plant.

EPA used the subcategories to study the characteristics of the untreated wastewater for the purpose of selecting in-plant control and end-of-pipe treatment options. The pollutants present at levels of most significant concentration are:

- Cadmium,
- Chromium,
- Cyanide,

- Copper,
- Lead,
- Nickel,
- Zinc,
- Aluminum,
- Oil and grease,
- Suspended solids, and
- Specific toxic organics.

The Agency studied various end-of-pipe technologies to treat the above pollutants, including:

- Chemical precipitation and sedimentation (lime and settle),
- Oil skimming,
- Chromium reduction,
- Cyanide oxidation or precipitation,
- Multimedia filtration,
- Carbon adsorption,
- Reverse osmosis,
- Chemical emulsion breaking, and
- Thermal emulsion breaking.

EPA also studied various types of in-plant controls reported in the dcp's and observed during sampling. The in-plant controls studied included:

- Recycle of contact cooling water and scrubber liquor,
- Countercurrent cascade rinsing,
- Hauling or regeneration of chemical baths for cleaning or etching, and
- Alternative fluxing and degassing methods which do not require wet scrubbing.

Engineering costs were prepared for each of the treatment options considered for each plant in the category. These costs were then used by the Agency to estimate the impact of implementing the various options on the industry. For each subcategory for each control and treatment option, the number of potential closures,

number of employees affected, and impact on price were estimated. These results are reported in the Economic Impact Analysis of Proposed Effluent Limitations and Standards for the Aluminum Forming Industry.

The Agency has also examined the performance of each control and treatment option. The Agency has identified BPT to represent the average of the best existing technology. Metals removal based on lime and settle technology is the basis for the BPT limitations on zinc, aluminum, and suspended solids, while oil removal by skimming and chemical emulsion breaking were selected as the basis for the oil and grease limitation. Chromium reduction may be necessary to achieve the limitation on chromium. Cyanide removal may be necessary if cyanide is present in wastewaters.

The goal of BAT is to achieve increased levels of toxic pollutant removal. For BAT, the Agency selected the same end-of-pipe treatment as BPT in conjunction with several in-process control technologies which include recycle of process water from scrubbing and contact cooling waste streams, countercurrent cascade rinsing, regeneration or hauling of chemical baths used for cleaning or etching, and alternate fluxing and desgassing methods to achieve zero discharge. All of the control technologies, as well as the end-of-pipe treatment, except for cyanide removal, are currently being applied to aluminum forming process wastewater. The Agency is considering promulgating BAT on the basis of the addition of polishing filters.

BDT, which is the technical basis of NSPS is similar to BAT with the addition of polishing filters. In selecting BDT, EPA recognizes that new plants have the opportunity to implement the best and most efficient manufacturing processes and control and treatment technology.

For PSES, the Agency selected the same technology as BAT, which is BPT end-of-pipe treatment in conjunction with several in-process flow reduction control techniques. For PSNS, the Agency selected the same technology as NSPS, which is BPT end-of-pipe treatment with the addition of polishing filters in conjunction with several in-process flow reduction control techniques. The Agency is considering promulgating PSES on the basis of the addition of polishing filters.

SECTION II

RECOMMENDATIONS

1. EPA has divided the aluminum forming category into six subcategories for the purpose of effluent limitations and standards. These subcategories are:

   - Rolling With Neat Oils
   - Rolling With Emulsions
   - Extrusion
   - Forging
   - Drawing With Neat Oils
   - Drawing With Emulsions or Soaps

2. BPT is being proposed based on the treatment effectiveness achievable by the application of oil skimming and chemical precipitation and sedimentation (lime and settle) technology. The following BPT effluent limitations are being proposed for existing sources:

A. BPT MASS LIMITATIONS FOR THE ROLLING WITH NEAT OILS SUBCATEGORY

(a) Rolling With Neat Oils - Core Waste Streams Without An Annealing Furnace Scrubber

Pollutant or Pollutant Property		Maximum for Any One Day	Maximum for Monthly Average
	mg/kkg (lb/billion lbs) of aluminum rolled with neat oils		
119	Chromium	6.96	2.82
121	Cyanide	4.81	1.99
128	Zinc	22.05	9.28
	Aluminum	75.44	30.84
	Oil & Grease	331.60	198.96
	Total Suspended Solids	679.78	331.60
	pH	Within the range of 7.5 to 10.0 at all times.	

(b) Rolling With Neat Oils - Core Waste Streams With An Annealing Furnace Scrubber

	Pollutant or Pollutant Property	Maximum for Any One Day	Maximum for Monthly Average
	mg/kkg (lb/billion lbs) of aluminum rolled with neat oils		
119	Chromium	18.03	7.30
121	Cyanide	12.45	5.15
128	Zinc	57.10	24.04
	Aluminum	195.33	79.85
	Oil & Grease	858.60	515.16
	Total Suspended Solids	1,760.13	858.60
	pH	Within the range of 7.5 to 10.0 at all times.	

(c) Continuous Sheet Casting - Spent Lubricant

	Pollutant or Pollutant Property	Maximum for Any One Day	Maximum for Monthly Average
	mg/kkg (lb/billion lbs) of aluminum cast by continuous methods		
119	Chromium	0.77	0.31
121	Cyanide	0.53	0.22
128	Zinc	2.45	1.03
	Aluminum	8.39	3.43
	Oil & Grease	36.86	22.12
	Total Suspended Solids	75.56	36.86
	pH	Within the range of 7.5 to 10.0 at all times.	

(d) Solution Heat Treatment - Contact Cooling Water

	Pollutant or Pollutant Property	Maximum for Any One Day	Maximum for Monthly Average
	mg/kkg (lb/billion lbs) of aluminum quenched		
119	Chromium	3,236.10	1,309.85
121	Cyanide	2,234.45	924.60
128	Zinc	10,247.65	4,314.80
	Aluminum	35,057.75	14,331.30
	Oil & Grease	154,100.00	92,460.00
	Total Suspended Solids	315,905.00	154,100.00
	pH	Within the range of 7.5 to 10.0 at all times.	

(e) Cleaning or Etching - Bath

Pollutant or Pollutant Property		Maximum for Any One Day	Maximum for Monthly Average
	mg/kkg (lb/billion lbs) of aluminum cleaned or etched		
119	Chromium	85.85	34.75
121	Cyanide	59.28	24.53
128	Zinc	271.85	114.46
	Aluminum	930.02	380.18
	Oil & Grease	4,088.00	2,452.80
	Total Suspended Solids	8,380.40	4,088.00
	pH	Within the range of 7.5 to 10.0 at all times.	

(f) Cleaning or Etching - Rinse

Pollutant or Pollutant Property		Maximum for Any One Day	Maximum for Monthly Average
	mg/kkg (lb/billion lbs) of aluminum cleaned or etched		
119	Chromium	7,081.20	2,866.20
121	Cyanide	4,889.40	2,023.20
128	Zinc	22,423.80	9,441.60
	Aluminum	76,713.00	31,359.60
	Oil & Grease	337,200.00	202,320.00
	Total Suspended Solids	691,260.00	337,200.00
	pH	Within the range of 7.5 to 10.0 at all times.	

(g) Cleaning or Etching - Scrubber Liquor

Pollutant or Pollutant Property		Maximum for Any One Day	Maximum for Monthly Average
	mg/kkg (lb/billion lbs) of aluminum cleaned or etched		
119	Chromium	7,232.40	2,927.40
121	Cyanide	4,993.80	2,066.40
128	Zinc	22,902.60	9,643.20
	Aluminum	78,351.00	32,029.20
	Oil & Grease	344,400.00	206,640.00
	Total Suspended Solids	706,020.00	344,400.00
	pH	Within the range of 7.5 to 10.0 at all times.	

B. BPT MASS LIMITATIONS FOR THE ROLLING WITH EMULSIONS SUBCATEGORY

(a) Rolling With Emulsions - Core Waste Streams

	Pollutant or Pollutant Property	Maximum for Any One Day	Maximum for Monthly Average
	mg/kkg (lb/billion lbs) of aluminum rolled with emulsions		
119	Chromium	38.26	15.49
121	Cyanide	26.42	10.93
128	Zinc	121.15	51.01
	Aluminum	414.46	169.43
	Oil & Grease	1,821.80	1,093.08
	Total Suspended Solids	3,734.69	1,821.80
	pH	Within the range of 7.5 to 10.0 at all times.	

(b) Direct Chill Casting - Contact Cooling Water

	Pollutant or Pollutant Property	Maximum for Any One Day	Maximum for Monthly Average
	mg/kkg (lb/billion lbs) of aluminum cast by direct chill methods		
119	Chromium	839.58	339.83
121	Cyanide	579.71	239.88
128	Zinc	2,658.67	1,119.44
	Aluminum	9,095.45	3,718.14
	Oil & Grease	39,980.00	23,988.00
	Total Suspended Solids	81,959.00	39,980.00
	pH	Within the range of 7.5 to 10.0 at all times.	

(c) Solution Heat Treatment - Contact Cooling Water

	Pollutant or Pollutant Property	Maximum for Any One Day	Maximum for Monthly Average
	mg/kkg (lb/billion lbs) of aluminum quenched		
119	Chromium	3,236.10	1,309.85
121	Cyanide	2,234.45	924.60
128	Zinc	10,247.65	4,314.80
	Aluminum	35,057.75	14,331.30
	Oil & Grease	154,100.00	92,460.00
	Total Suspended Solids	315,905.00	154,100.00
	pH	Within the range of 7.5 to 10.0 at all times.	

(d) Cleaning or Etching - Bath

	Pollutant or Pollutant Property	Maximum for Any One Day	Maximum for Monthly Average
	mg/kkg (lb/billion lbs) of aluminum cleaned or etched		
119	Chromium	85.85	34.75
121	Cyanide	59.28	24.53
128	Zinc	271.85	114.46
	Aluminum	930.02	380.18
	Oil & Grease	4,088.00	2,452.80
	Total Suspended Solids	8,380.40	4,088.00
	pH	Within the range of 7.5 to 10.0 at all times.	

(e) Cleaning or Etching - Rinse

	Pollutant or Pollutant Property	Maximum for Any One Day	Maximum for Monthly Average
	mg/kkg (lb/billion lbs) of aluminum cleaned or etched		
119	Chromium	7,081.20	2,866.20
121	Cyanide	4,889.40	2,023.20
128	Zinc	22,423.80	9,441.60
	Aluminum	76,713.00	31,359.60
	Oil & Grease	337,200.00	202,320.00
	Total Suspended Solids	691,260.00	337,200.00
	pH	Within the range of 7.5 to 10.0 at all times.	

(f) Cleaning or Etching - Scrubber Liquor

	Pollutant or Pollutant Property	Maximum for Any One Day	Maximum for Monthly Average
	mg/kkg (lb/billion lbs) of aluminum cleaned or etched		
119	Chromium	7,232.40	2,927.40
121	Cyanide	4,993.80	2,066.40
128	Zinc	22,902.60	9,643.20
	Aluminum	78,351.00	32,029.20
	Oil & Grease	344,400.00	206,640.00
	Total Suspended Solids	706,020.00	344,400.00
	pH	Within the range of 7.5 to 10.0 at all times.	

C. BPT MASS LIMITATIONS FOR THE EXTRUSION SUBCATEGORY

(a) Extrusion - Core Waste Streams

Pollutant or Pollutant Property		Maximum for Any One Day	Maximum for Monthly Average
		mg/kkg (lb/billion lbs) of aluminum extruded	
119	Chromium	135.95	55.03
121	Cyanide	93.87	38.84
128	Zinc	430.52	181.27
	Aluminum	1,472.84	602.08
	Oil & Grease	6,474.00	3,884.40
	Total Suspended Solids	13,271.70	6,474.00
	pH	Within the range of 7.5 to 10.0 at all times.	

(b) Direct Chill Casting - Contact Cooling Water

Pollutant or Pollutant Property		Maximum for Any One Day	Maximum for Monthly Average
		mg/kkg (lb/billion lbs) of aluminum cast by direct chill methods	
119	Chromium	839.58	339.83
121	Cyanide	579.71	239.88
128	Zinc	2,658.67	1,119.44
	Aluminum	9,095.45	3,718.14
	Oil & Grease	39,980.00	23,988.00
	Total Suspended Solids	81,959.00	39,980.00
	pH	Within the range of 7.5 to 10.0 at all times.	

(c) Solution and Press Heat Treatment - Contact Cooling Water

Pollutant or Pollutant Property		Maximum for Any One Day	Maximum for Monthly Average
		mg/kkg (lb/billion lbs) of aluminum quenched	
119	Chromium	3,236.10	1,309.85
121	Cyanide	2,234.45	924.60
128	Zinc	10,247.65	4,314.80
	Aluminum	35,057.75	14,331.30
	Oil & Grease	154,100.00	92,460.00
	Total Suspended Solids	315,905.00	154,100.00
	pH	Within the range of 7.5 to 10.0 at all times.	

(d) Cleaning or Etching - Bath

	Pollutant or Pollutant Property	Maximum for Any One Day	Maximum for Monthly Average
	mg/kkg (lb/billion lbs) of aluminum cleaned or etched		
119	Chromium	85.85	34.75
121	Cyanide	59.28	24.53
128	Zinc	271.85	114.46
	Aluminum	930.02	380.18
	Oil & Grease	4,088.00	2,452.80
	Total Suspended Solids	8,380.40	4,088.00
	pH	Within the range of 7.5 to 10.0 at all times.	

(e) Cleaning or Etching - Rinse

	Pollutant or Pollutant Property	Maximum for Any One Day	Maximum for Monthly Average
	mg/kkg (lb/billion lbs) of aluminum cleaned or etched		
119	Chromium	7,081.20	2,866.20
121	Cyanide	4,889.40	2,023.20
128	Zinc	22,423.80	9,441.60
	Aluminum	76,713.00	31,359.60
	Oil & Grease	337,200.00	202,320.00
	Total Suspended Solids	691,260.00	337,200.00
	pH	Within the range of 7.5 to 10.0 at all times.	

(f) Cleaning or Etching - Scrubber Liquor

	Pollutant or Pollutant Property	Maximum for Any One Day	Maximum for Monthly Average
	mg/kkg (lb/billion lbs) of aluminum cleaned or etched		
119	Chromium	7,232.40	2,927.40
121	Cyanide	4,993.80	2,066.40
128	Zinc	22,902.60	9,643.20
	Aluminum	78,351.00	32,029.20
	Oil & Grease	344,400.00	206,640.00
	Total Suspended Solids	706,020.00	344,400.00
	pH	Within the range of 7.5 to 10.0 at all times.	

(g) Degassing - Scrubber Liquor

Pollutant or Pollutant Property		Maximum for Any One Day	Maximum for Monthly Average
		mg/kkg (lb/billion lbs) of aluminum degassed	
119	Chromium	12.26	4.96
121	Cyanide	8.47	3.50
128	Zinc	38.82	16.35
	Aluminum	132.81	54.29
	Oil & Grease	583.80	350.28
	Total Suspended Solids	1,196.79	583.80
	pH	Within the range of 7.5 to 10.0 at all times.	

D. BPT MASS LIMITATIONS FOR THE DRAWING WITH NEAT OILS SUBCATEGORY

(a) Drawing With Neat Oils - Core Waste Streams

Pollutant or Pollutant Property		Maximum for Any One Day	Maximum for Monthly Average
		mg/kkg (lb/billion lbs) of aluminum drawn with neat oils	
119	Chromium	3.28	1.33
121	Cyanide	2.26	0.94
128	Zinc	10.38	4.37
	Aluminum	35.52	14.52
	Oil & Grease	156.14	93.68
	Total Suspended Solids	320.09	156.14
	pH	Within the range of 7.5 to 10.0 at all times.	

(b) Continuous Rod Casting - Contact Cooling Water

Pollutant or Pollutant Property		Maximum for Any One Day	Maximum for Monthly Average
		mg/kkg (lb/billion lbs) of aluminum cast by continuous methods	
119	Chromium	437.64	177.14
121	Cyanide	302.18	125.04
128	Zinc	1,385.86	583.52
	Aluminum	4,741.10	1,938.12
	Oil & Grease	20,840.00	12,504.00
	Total Suspended Solids	42,722.00	20,840.00
	pH	Within the range of 7.5 to 10.0 at all times.	

(c) Continuous Rod Casting - Spent Lubricant

	Pollutant or Pollutant Property	Maximum for Any One Day	Maximum for Monthly Average
	mg/kkg (lb/billion lbs) of aluminum cast by continuous methods		
119	Chromium	0.77	0.31
121	Cyanide	0.53	0.22
128	Zinc	2.45	1.03
	Aluminum	8.39	3.43
	Oil & Grease	36.86	22.12
	Total Suspended Solids	75.56	36.86
	pH	Within the range of 7.5 to 10.0 at all times.	

(d) Solution Heat Treatment - Contact Cooling Water

	Pollutant or Pollutant Property	Maximum for Any One Day	Maximum for Monthly Average
	mg/kkg (lb/billion lbs) of aluminum quenched		
119	Chromium	3,236.10	1,309.85
121	Cyanide	2,234.45	924.60
128	Zinc	10,247.65	4,314.80
	Aluminum	35,057.75	14,331.30
	Oil & Grease	154,100.00	92,460.00
	Total Suspended Solids	315,905.00	154,100.00
	pH	Within the range of 7.5 to 10.0 at all times.	

(e) Cleaning or Etching - Bath

	Pollutant or Pollutant Property	Maximum for Any One Day	Maximum for Monthly Average
	mg/kkg (lb/billion lbs) of aluminum cleaned or etched		
119	Chromium	85.85	34.75
121	Cyanide	59.28	24.53
128	Zinc	271.85	114.46
	Aluminum	930.02	380.18
	Oil & Grease	4,088.00	2,452.80
	Total Suspended Solids	8,380.40	4,088.00
	pH	Within the range of 7.5 to 10.0 at all times.	

(f) Cleaning or Etching - Rinse

Pollutant or Pollutant Property		Maximum for Any One Day	Maximum for Monthly Average
	mg/kkg (lb/billion lbs) of aluminum cleaned or etched		
119	Chromium	7,081.20	2,866.20
121	Cyanide	4,889.40	2,023.20
128	Zinc	22,423.80	9,441.60
	Aluminum	76,713.00	31,359.60
	Oil & Grease	337,200.00	202,320.00
	Total Suspended Solids	691,260.00	337,200.00
	pH	Within the range of 7.5 to 10.0 at all times.	

(g) Cleaning or Etching - Scrubber Liquor

Pollutant or Pollutant Property		Maximum for Any One Day	Maximum for Monthly Average
	mg/kkg (lb/billion lbs) of aluminum cleaned or etched		
119	Chromium	7,232.40	2,927.40
121	Cyanide	4,993.80	2,066.40
128	Zinc	22,902.60	9,643.20
	Aluminum	78,351.00	32,029.20
	Oil & Grease	344,400.00	206,640.00
	Total Suspended Solids	706,020.00	344,400.00
	pH	Within the range of 7.5 to 10.0 at all times.	

E. BPT MASS LIMITATIONS FOR THE DRAWING WITH EMULSIONS OR SOAPS SUBCATEGORY

(a) Drawing With Emulsions or Soaps - Core Waste Streams

Pollutant or Pollutant Property		Maximum for Any One Day	Maximum for Monthly Average
	mg/kkg (lb/billion lbs) of aluminum drawn with emulsions or soaps		
119	Chromium	178.21	72.13
121	Cyanide	123.05	50.92
128	Zinc	564.32	237.61
	Aluminum	1,930.57	789.20
	Oil & Grease	8,486.00	5,091.60
	Total Suspended Solids	17,396.30	8,486.00
	pH	Within the range of 7.5 to 10.0 at all times.	

(b) Continuous Rod Casting - Contact Cooling Water

	Pollutant or Pollutant Property	Maximum for Any One Day	Maximum for Monthly Average
	mg/kkg (lb/billion lbs) of aluminum cast by continuous methods		
119	Chromium	437.64	177.14
121	Cyanide	302.18	125.04
128	Zinc	1,385.86	583.52
	Aluminum	4,741.10	1,938.12
	Oil & Grease	20,840.00	12,504.00
	Total Suspended Solids	42,722.00	20,840.00
	pH	Within the range of 7.5 to 10.0 at all times.	

(c) Continuous Rod Casting - Spent Lubricant

	Pollutant or Pollutant Property	Maximum for Any One Day	Maximum for Monthly Average
	mg/kkg (lb/billion lbs) of aluminum cast by continuous methods		
119	Chromium	0.77	0.31
121	Cyanide	0.53	0.22
128	Zinc	2.45	1.03
	Aluminum	8.39	3.43
	Oil & Grease	36.86	22.12
	Total Suspended Solids	75.56	36.86
	pH	Within the range of 7.5 to 10.0 at all times.	

(d) Solution Heat Treatment - Contact Cooling Water

	Pollutant or Pollutant Property	Maximum for Any One Day	Maximum for Monthly Average
	mg/kkg (lb/billion lbs) of aluminum quenched		
119	Chromium	3,236.10	1,309.85
121	Cyanide	2,234.45	924.60
128	Zinc	10,247.65	4,314.80
	Aluminum	35,057.75	14,331.30
	Oil & Grease	154,100.00	92,460.00
	Total Suspended Solids	315,905.00	154,100.00
	pH	Within the range of 7.5 to 10.0 at all times.	

(e) Cleaning or Etching - Bath

	Pollutant or Pollutant Property	Maximum for Any One Day	Maximum for Monthly Average
	mg/kkg (lb/billion lbs) of aluminum cleaned or etched		
119	Chromium	85.85	34.75
121	Cyanide	59.28	24.53
128	Zinc	271.85	114.46
	Aluminum	930.02	380.18
	Oil & Grease	4,088.00	2,452.80
	Total Suspended Solids	8,380.40	4,088.00
	pH	Within the range of 7.5 to 10.0 at all times.	

(f) Cleaning or Etching - Rinse

	Pollutant or Pollutant Property	Maximum for Any One Day	Maximum for Monthly Average
	mg/kkg (lb/billion lbs) of aluminum cleaned or etched		
119	Chromium	7,081.20	2,866.20
121	Cyanide	4,889.40	2,023.20
128	Zinc	22,423.80	9,441.60
	Aluminum	76,713.00	31,359.60
	Oil & Grease	337,200.00	202,320.00
	Total Suspended Solids	691,260.00	337,200.00
	pH	Within the range of 7.5 to 10.0 at all times.	

(g) Cleaning or Etching - Scrubber Liquor

	Pollutant or Pollutant Property	Maximum for Any One Day	Maximum for Monthly Average
	mg/kkg (lb/billion lbs) of aluminum cleaned or etched		
119	Chromium	7,232.40	2,927.40
121	Cyanide	4,993.80	2,066.40
128	Zinc	22,902.60	9,643.20
	Aluminum	78,351.00	32,029.20
	Oil & Grease	344,400.00	206,640.00
	Total Suspended Solids	706,020.00	344,400.00
	pH	Within the range of 7.5 to 10.0 at all times.	

3. BAT is being proposed based on the treatment effectiveness achievable by the application of oil skimming, chemical precipitation, and sedimentation (lime and settle) technology and in-process flow reduction control methods. The following BAT effluent limitations are being proposed for existing sources:

A. BAT MASS LIMITATIONS FOR THE ROLLING WITH NEAT OILS SUBCATEGORY

(a) Rolling With Neat Oils - Core Waste Streams Without An Annealing Furnace Scrubber

Pollutant or Pollutant Property		Maximum for Any One Day	Maximum for Monthly Average
mg/kkg (lb/billion lbs) of aluminum rolled with neat oils			
119	Chromium	6.96	2.82
121	Cyanide	4.81	1.99
128	Zinc	22.05	9.28
	Aluminum	75.44	30.84

(b) Rolling With Neat Oils - Core Waste Streams With An Annealing Furnace Scrubber

Pollutant or Pollutant Property		Maximum for Any One Day	Maximum for Monthly Average
mg/kkg (lb/billion lbs) of aluminum rolled with neat oils			
119	Chromium	18.03	7.30
121	Cyanide	12.45	5.15
128	Zinc	57.10	24.04
	Aluminum	195.33	79.85

(c) Continuous Sheet Casting - Spent Lubricant

Pollutant or Pollutant Property		Maximum for Any One Day	Maximum for Monthly Average
mg/kkg (lb/billion lbs) of aluminum cast by continuous methods			
119	Chromium	0.77	0.31
121	Cyanide	0.53	0.22
128	Zinc	2.45	1.03
	Aluminum	8.39	3.43

(d) Solution Heat Treatment - Contact Cooling Water

Pollutant or Pollutant Property		Maximum for Any One Day	Maximum for Monthly Average
		mg/kkg (lb/billion lbs) of aluminum quenched	
119	Chromium	855.54	346.29
121	Cyanide	590.73	244.44
128	Zinc	2,709.21	1,140.72
	Aluminum	9,268.35	3,788.82

(e) Cleaning or Etching - Rinse

Pollutant or Pollutant Property		Maximum for Any One Day	Maximum for Monthly Average
		mg/kkg (lb/billion lbs) of aluminum cleaned or etched	
119	Chromium	708.12	286.62
121	Cyanide	488.94	202.32
128	Zinc	2,242.38	944.16
	Aluminum	7,671.30	3,135.96

(f) Cleaning or Etching - Scrubber Liquor

Pollutant or Pollutant Property		Maximum for Any One Day	Maximum for Monthly Average
		mg/kkg (lb/billion lbs) of aluminum cleaned or etched	
119	Chromium	811.86	328.61
121	Cyanide	560.57	231.96
128	Zinc	2,570.89	1,082.48
	Aluminum	8,795.15	3,595.38

B. BAT MASS LIMITATIONS FOR THE ROLLING WITH EMULSIONS SUBCATEGORY

(a) Rolling With Emulsions - Core Waste Streams

Pollutant or Pollutant Property		Maximum for Any One Day	Maximum for Monthly Average
		mg/kkg (lb/billion lbs) of aluminum rolled with emulsions	
119	Chromium	38.26	15.49
121	Cyanide	26.42	10.93
128	Zinc	121.15	51.01
	Aluminum	414.46	169.43

(b) Direct Chill Casting - Contact Cooling Water

Pollutant or Pollutant Property		Maximum for Any One Day	Maximum for Monthly Average
mg/kkg (lb/billion lbs) of aluminum cast by direct chill methods			
119	Chromium	839.58	339.83
121	Cyanide	579.71	239.88
128	Zinc	2,658.67	1,119.44
	Aluminum	9,095.45	3,718.14

(c) Solution Heat Treatment - Contact Cooling Water

Pollutant or Pollutant Property		Maximum for Any One Day	Maximum for Monthly Average
mg/kkg (lb/billion lbs) of aluminum quenched			
119	Chromium	855.54	346.29
121	Cyanide	590.73	244.44
128	Zinc	2,709.21	1,140.72
	Aluminum	9,268.35	3,788.82

(d) Cleaning or Etching - Rinse

Pollutant or Pollutant Property		Maximum for Any One Day	Maximum for Monthly Average
mg/kkg (lb/billion lbs) of aluminum cleaned or etched			
119	Chromium	708.12	286.62
121	Cyanide	488.94	202.32
128	Zinc	2,242.38	944.16
	Aluminum	7,671.30	3,135.96

(e) Cleaning or Etching - Scrubber Liquor

Pollutant or Pollutant Property		Maximum for Any One Day	Maximum for Monthly Average
mg/kkg (lb/billion lbs) of aluminum cleaned or etched			
119	Chromium	811.86	328.61
121	Cyanide	560.57	231.96
128	Zinc	2,570.89	1,082.48
	Aluminum	8,795.15	3,595.38

C. BAT MASS LIMITATIONS FOR THE EXTRUSION SUBCATEGORY

(a) Extrusion - Core Waste Streams

Pollutant or Pollutant Property		Maximum for Any One Day	Maximum for Monthly Average
		mg/kkg (lb/billion lbs) of aluminum extruded	
119	Chromium	125.20	50.68
121	Cyanide	86.45	35.77
128	Zinc	396.47	166.94
	Aluminum	1,356.36	554.47

(b) Direct Chill Casting - Contact Cooling Water

Pollutant or Pollutant Property		Maximum for Any One Day	Maximum for Monthly Average
		mg/kkg (lb/billion lbs) of aluminum cast by direct chill methods	
119	Chromium	839.58	339.83
121	Cyanide	579.71	239.88
128	Zinc	2,658.67	1,119.44
	Aluminum	9,095.45	3,718.14

(c) Solution and Press Heat Treatment - Contact Cooling Water

Pollutant or Pollutant Property		Maximum for Any One Day	Maximum for Monthly Average
		mg/kkg (lb/billion lbs) of aluminum quenched	
119	Chromium	855.54	346.29
121	Cyanide	590.73	244.44
128	Zinc	2,709.21	1,140.72
	Aluminum	9,268.35	3,788.82

(d) Cleaning or Etching - Rinse

Pollutant or Pollutant Property		Maximum for Any One Day	Maximum for Monthly Average
		mg/kkg (lb/billion lbs) of aluminum cleaned or etched	
119	Chromium	708.12	286.62
121	Cyanide	488.94	202.32
128	Zinc	2,242.38	944.16
	Aluminum	7,671.30	3,135.96

(e) Cleaning or Etching - Scrubber Liquor

Pollutant or Pollutant Property		Maximum for Any One Day	Maximum for Monthly Average
mg/kkg (lb/billion lbs) of aluminum cleaned or etched			
119	Chromium	811.86	328.61
121	Cyanide	560.57	231.96
128	Zinc	2,570.89	1,082.48
	Aluminum	8,795.15	3,595.38

D. BAT MASS LIMITATIONS FOR THE DRAWING WITH NEAT OILS SUBCATEGORY

(a) Drawing With Neat Oils - Core Waste Streams

Pollutant or Pollutant Property		Maximum for Any One Day	Maximum for Monthly Average
mg/kkg (lb/billion lbs) of aluminum drawn with neat oils			
119	Chromium	3.28	1.33
121	Cyanide	2.26	0.94
128	Zinc	10.38	4.37
	Aluminum	35.52	14.52

(b) Continuous Rod Casting - Contact Cooling Water

Pollutant or Pollutant Property		Maximum for Any One Day	Maximum for Monthly Average
mg/kkg (lb/billion lbs) of aluminum cast by continuous methods			
119	Chromium	43.76	17.71
121	Cyanide	30.22	12.50
128	Zinc	138.59	58.35
	Aluminum	474.11	193.81

(c) Continuous Rod Casting - Spent Lubricant

Pollutant or Pollutant Property		Maximum for Any One Day	Maximum for Monthly Average
mg/kkg (lb/billion lbs) of aluminum cast by continuous methods			
119	Chromium	0.77	0.31
121	Cyanide	0.53	0.22
128	Zinc	2.45	1.03
	Aluminum	8.39	3.43

(d) Solution Heat Treatment - Contact Cooling Water

Pollutant or Pollutant Property		Maximum for Any One Day	Maximum for Monthly Average
mg/kkg (lb/billion lbs) of aluminum quenched			
119	Chromium	855.54	346.29
121	Cyanide	590.73	244.44
128	Zinc	2,709.21	1,140.72
	Aluminum	9,268.35	3,788.82

(e) Cleaning or Etching - Rinse

Pollutant or Pollutant Property		Maximum for Any One Day	Maximum for Monthly Average
mg/kkg (lb/billion lbs) of aluminum cleaned or etched			
119	Chromium	708.12	286.62
121	Cyanide	488.94	202.32
128	Zinc	2,242.38	944.16
	Aluminum	7,671.30	3,135.96

(f) Cleaning or Etching - Scrubber Liquor

Pollutant or Pollutant Property		Maximum for Any One Day	Maximum for Monthly Average
mg/kkg (lb/billion lbs) of aluminum cleaned or etched			
119	Chromium	811.86	328.61
121	Cyanide	560.57	231.96
128	Zinc	2,570.89	1,082.48
	Aluminum	8,795.15	3,595.38

E. BAT MASS LIMITATIONS FOR THE DRAWING WITH EMULSIONS OR SOAPS SUBCATEGORY

(a) Drawing With Emulsions or Soaps - Core Waste Streams

Pollutant or Pollutant Property		Maximum for Any One Day	Maximum for Monthly Average
mg/kkg (lb/billion lbs) of aluminum drawn with emulsions or soaps			
119	Chromium	178.21	72.13
121	Cyanide	123.05	50.92
128	Zinc	564.32	237.61
	Aluminum	1,930.57	789.20

(b) Continuous Rod Casting - Contact Cooling Water

Pollutant or Pollutant Property		Maximum for Any One Day	Maximum for Monthly Average
mg/kkg (lb/billion lbs) of aluminum cast by continuous methods			
119	Chromium	43.76	17.71
121	Cyanide	30.22	12.50
128	Zinc	138.59	58.35
	Aluminum	474.11	193.81

(c) Continuous Rod Casting - Spent Lubricant

Pollutant or Pollutant Property		Maximum for Any One Day	Maximum for Monthly Average
mg/kkg (lb/billion lbs) of aluminum cast by continuous methods			
119	Chromium	0.77	0.31
121	Cyanide	0.53	0.22
128	Zinc	2.45	1.03
	Aluminum	8.39	3.43

(d) Solution Heat Treatment - Contact Cooling Water

Pollutant or Pollutant Property		Maximum for Any One Day	Maximum for Monthly Average
mg/kkg (lb/billion lbs) of aluminum quenched			
119	Chromium	855.54	346.29
121	Cyanide	590.73	244.44
128	Zinc	2,709.21	1,140.72
	Aluminum	9,268.35	3,788.82

(e) Cleaning or Etching - Rinse

Pollutant or Pollutant Property		Maximum for Any One Day	Maximum for Monthly Average
		mg/kkg (lb/billion lbs) of aluminum cleaned or etched	
119	Chromium	708.12	286.62
121	Cyanide	488.94	202.32
128	Zinc	2,242.38	944.16
	Aluminum	7,671.30	3,135.96

(f) Cleaning or Etching - Scrubber Liquor

Pollutant or Pollutant Property		Maximum for Any One Day	Maximum for Monthly Average
		mg/kkg (lb/billion lbs) of aluminum cleaned or etched	
119	Chromium	811.86	328.61
121	Cyanide	560.57	231.96
128	Zinc	2,570.89	1,082.48
	Aluminum	8,795.15	3,595.38

4. NSPS is being proposed based on the treatment effectiveness achievable by the application of oil skimming, chemical precipitation, sedimentation and filtration (lime, settle, and filter) technology and in-process flow reduction control methods. The following effluent standards are being proposed for new sources:

A. NSPS FOR THE ROLLING WITH NEAT OILS SUBCATEGORY

(a) Rolling With Neat Oils - Core Waste Streams Without An Annealing Furnace Scrubber

Pollutant or Pollutant Property		Maximum for Any One Day	Maximum for Monthly Average
		mg/kkg (lb/billion lbs) of aluminum rolled with neat oils	
119	Chromium	6.13	2.49
121	Cyanide	3.32	1.33
128	Zinc	16.91	6.96
	Aluminum	50.24	20.56
	Oil & Grease	165.80	165.80
	Total Suspended Solids	248.70	182.38
	pH	Within the range of 7.5 to 10.0 at all times.	

(b) Rolling With Neat Oils - Core Waste Streams With An Annealing Furnace Scrubber

	Pollutant or Pollutant Property	Maximum for Any One Day	Maximum for Monthly Average
	mg/kkg (lb/billion lbs) of aluminum rolled with neat oils		
119	Chromium	15.88	6.44
121	Cyanide	8.59	3.43
128	Zinc	43.79	18.03
	Aluminum	130.08	53.23
	Oil & Grease	429.30	429.30
	Total Suspended Solids	643.95	472.23
	pH	Within the range of 7.5 to 10.0 at all times.	

(c) Continuous Sheet Casting - Spent Lubricant

	Pollutant or Pollutant Property	Maximum for Any One Day	Maximum for Monthly Average
	mg/kkg (lb/billion lbs) of aluminum cast by continuous methods		
119	Chromium	0.68	0.28
121	Cyanide	0.37	0.15
128	Zinc	1.88	0.77
	Aluminum	5.58	2.29
	Oil & Grease	18.43	18.43
	Total Suspended Solids	27.65	20.27
	pH	Within the range of 7.5 to 10.0 at all times.	

(d) Solution Heat Treatment - Contact Cooling Water

	Pollutant or Pollutant Property	Maximum for Any One Day	Maximum for Monthly Average
	mg/kkg (lb/billion lbs) of aluminum quenched		
119	Chromium	753.69	305.55
121	Cyanide	407.40	162.96
128	Zinc	2,077.74	855.54
	Aluminum	6,172.11	2,525.88
	Oil & Grease	20,370.00	20,370.00
	Total Suspended Solids	30,555.00	22,407.00
	pH	Within the range of 7.5 to 10.0 at all times.	

(e) Cleaning or Etching - Rinse

	Pollutant or Pollutant Property	Maximum for Any One Day	Maximum for Monthly Average
	mg/kkg (lb/billion lbs) of aluminum cleaned or etched		
119	Chromium	623.82	252.90
121	Cyanide	337.20	134.88
128	Zinc	1,719.72	708.12
	Aluminum	5,108.58	2,090.64
	Oil & Grease	16,860.00	16,860.00
	Total Suspended Solids	25,290.00	18,546.00
	pH	Within the range of 7.5 to 10.0 at all times.	

(f) Cleaning or Etching - Scrubber Liquor

	Pollutant or Pollutant Property	Maximum for Any One Day	Maximum for Monthly Average
	mg/kkg (lb/billion lbs) of aluminum cleaned or etched		
119	Chromium	715.21	289.95
121	Cyanide	386.60	154.64
128	Zinc	1,971.66	811.86
	Aluminum	5,856.99	2,396.92
	Oil & Grease	19,330.00	19,330.00
	Total Suspended Solids	28,995.00	21,263.00
	pH	Within the range of 7.5 to 10.0 at all times.	

B. NSPS FOR THE ROLLING WITH EMULSIONS SUBCATEGORY

(a) Rolling With Emulsions - Core Waste Streams

	Pollutant or Pollutant Property	Maximum for Any One Day	Maximum for Monthly Average
	mg/kkg (lb/billion lbs) of aluminum rolled with emulsions		
119	Chromium	33.70	13.66
121	Cyanide	8.22	7.29
128	Zinc	92.91	38.26
	Aluminum	276.00	112.95
	Oil & Grease	910.90	910.90
	Total Suspended Solids	1,366.35	1,001.99
	pH	Within the range of 7.5 to 10.0 at all times.	

(b) Direct Chill Casting - Contact Cooling Water

	Pollutant or Pollutant Property	Maximum for Any One Day	Maximum for Monthly Average
	mg/kkg (lb/billion lbs) of aluminum cast by direct chill methods		
119	Chromium	739.63	299.85
121	Cyanide	399.80	159.92
128	Zinc	2,038.98	839.58
	Aluminum	6,056.97	2,478.76
	Oil & Grease	19,990.00	19,990.00
	Total Suspended Solids	29,985.00	21,989.00
	pH	Within the range of 7.5 to 10.0 at all times.	

(c) Solution Heat Treatment - Contact Cooling Water

	Pollutant or Pollutant Property	Maximum for Any One Day	Maximum for Monthly Average
	mg/kkg (lb/billion lbs) of aluminum quenched		
119	Chromium	753.69	305.55
121	Cyanide	407.40	162.96
128	Zinc	2,077.74	855.54
	Aluminum	6,172.11	2,525.88
	Oil & Grease	20,370.00	20,370.00
	Total Suspended Solids	30,555.00	22,407.00
	pH	Within the range of 7.5 to 10.0 at all times.	

(d) Cleaning or Etching - Rinse

	Pollutant or Pollutant Property	Maximum for Any One Day	Maximum for Monthly Average
	mg/kkg (lb/billion lbs) of aluminum cleaned or etched		
119	Chromium	623.82	252.90
121	Cyanide	337.20	134.88
128	Zinc	1,719.72	708.12
	Aluminum	5,108.58	2,090.64
	Oil & Grease	16,860.00	16,860.00
	Total Suspended Solids	25,290.00	18,546.00
	pH	Within the range of 7.5 to 10.0 at all times.	

(e) Cleaning or Etching - Scrubber Liquor

	Pollutant or Pollutant Property	Maximum for Any One Day	Maximum for Monthly Average
	mg/kkg (lb/billion lbs) of aluminum cleaned or etched		
119	Chromium	715.21	289.95
121	Cyanide	386.60	154.64
128	Zinc	1,971.66	811.86
	Aluminum	5,856.99	2,396.92
	Oil & Grease	19,330.00	19,330.00
	Total Suspended Solids	28,995.00	21,263.00
	pH	Within the range of 7.5 to 10.0 at all times.	

C. NSPS FOR THE EXTRUSION SUBCATEGORY

(a) Extrusion - Core Waste Streams

	Pollutant or Pollutant Property	Maximum for Any One Day	Maximum for Monthly Average
	mg/kkg (lb/billion lbs) of aluminum extruded		
119	Chromium	110.30	44.72
121	Cyanide	59.62	23.85
128	Zinc	304.06	125.20
	Aluminum	903.24	369.64
	Oil & Grease	2,981.00	2,981.00
	Total Suspended Solids	4,471.50	3,279.10
	pH	Within the range of 7.5 to 10.0 at all times.	

(b) Direct Chill Casting - Contact Cooling Water

	Pollutant or Pollutant Property	Maximum for Any One Day	Maximum for Monthly Average
	mg/kkg (lb/billion lbs) of aluminum cast by direct chill methods		
119	Chromium	739.63	299.85
121	Cyanide	399.80	159.92
128	Zinc	2,038.98	839.58
	Aluminum	6,056.97	2,478.76
	Oil & Grease	19,990.00	19,990.00
	Total Suspended Solids	29,985.00	21,989.00
	pH	Within the range of 7.5 to 10.0 at all times.	

(c) Solution and Press Heat Treatment - Contact Cooling Water

	Pollutant or Pollutant Property	Maximum for Any One Day	Maximum for Monthly Average
	mg/kkg (lb/billion lbs) of aluminum quenched		
119	Chromium	753.69	305.55
121	Cyanide	407.40	162.96
128	Zinc	2,077.74	855.54
	Aluminum	6,172.11	2,525.88
	Oil & Grease	20,370.00	20,370.00
	Total Suspended Solids	30,555.00	22,407.00
	pH	Within the range of 7.5 to 10.0 at all times.	

(d) Cleaning or Etching - Rinse

	Pollutant or Pollutant Property	Maximum for Any One Day	Maximum for Monthly Average
	mg/kkg (lb/billion lbs) of aluminum cleaned or etched		
119	Chromium	623.82	252.90
121	Cyanide	337.20	134.88
128	Zinc	1,719.72	708.12
	Aluminum	5,108.58	2,090.64
	Oil & Grease	16,860.00	16,860.00
	Total Suspended Solids	25,290.00	18,546.00
	pH	Within the range of 7.5 to 10.0 at all times.	

(e) Cleaning or Etching - Scrubber Liquor

	Pollutant or Pollutant Property	Maximum for Any One Day	Maximum for Monthly Average
	mg/kkg (lb/billion lbs) of aluminum cleaned or etched		
119	Chromium	715.21	289.95
121	Cyanide	386.60	154.64
128	Zinc	1,971.66	811.86
	Aluminum	5,856.99	2,396.92
	Oil & Grease	19,330.00	19,330.00
	Total Suspended Solids	28,995.00	21,263.00
	pH	Within the range of 7.5 to 10.0 at all times.	

D. NSPS FOR THE FORGING SUBCATEGORY

(a) Forging - Core Waste Streams

Pollutant or Pollutant Property		Maximum for Any One Day	Maximum for Monthly Average
		mg/kkg (lb/billion lbs) of aluminum forged	
119	Chromium	2.89	1.17
121	Cyanide	1.56	0.62
128	Zinc	7.96	3.28
	Aluminum	23.66	9.68
	Oil & Grease	78.07	78.07
	Total Suspended Solids	117.11	85.88
	pH	Within the range of 7.5 to 10.0 at all times.	

(b) Forging - Scrubber Liquor

Pollutant or Pollutant Property		Maximum for Any One Day	Maximum for Monthly Average
		mg/kkg (lb/billion lbs) of aluminum forged	
119	Chromium	34.89	14.15
121	Cyanide	18.86	7.54
128	Zinc	96.20	39.61
	Aluminum	285.76	116.94
	Oil & Grease	943.10	943.10
	Total Suspended Solids	1,414.65	1,037.41
	pH	Within the range of 7.5 to 10.0 at all times.	

(c) Solution Heat Treatment - Contact Cooling Water

Pollutant or Pollutant Property		Maximum for Any One Day	Maximum for Monthly Average
		mg/kkg (lb/billion lbs) of aluminum quenched	
119	Chromium	753.69	305.55
121	Cyanide	407.40	162.96
128	Zinc	2,077.74	855.54
	Aluminum	6,172.11	2,525.88
	Oil & Grease	20,370.00	20,370.00
	Total Suspended Solids	30,555.00	22,407.00
	pH	Within the range of 7.5 to 10.0 at all times.	

(d) Cleaning or Etching - Rinse

	Pollutant or Pollutant Property	Maximum for Any One Day	Maximum for Monthly Average
	mg/kkg (lb/billion lbs) of aluminum cleaned or etched		
119	Chromium	623.82	252.90
121	Cyanide	337.20	134.88
128	Zinc	1,719.72	708.12
	Aluminum	5,108.58	2,090.64
	Oil & Grease	16,860.00	16,860.00
	Total Suspended Solids	25,290.00	18,546.00
	pH	Within the range of 7.5 to 10.0 at all times.	

(e) Cleaning or Etching - Scrubber Liquor

	Pollutant or Pollutant Property	Maximum for Any One Day	Maximum for Monthly Average
	mg/kkg (lb/billion lbs) of aluminum cleaned or etched		
119	Chromium	715.21	289.95
121	Cyanide	386.60	154.64
128	Zinc	1,971.66	811.86
	Aluminum	5,856.99	2,396.92
	Oil & Grease	19,330.00	19,330.00
	Total Suspended Solids	28,995.00	21,263.00
	pH	Within the range of 7.5 to 10.0 at all times.	

E. NSPS FOR THE DRAWING WITH NEAT OILS SUBCATEGORY

(a) Drawing With Neat Oils - Core Waste Streams

	Pollutant or Pollutant Property	Maximum for Any One Day	Maximum for Monthly Average
	mg/kkg (lb/billion lbs) of aluminum drawn with neat oils		
119	Chromium	2.89	1.17
121	Cyanide	1.56	0.62
128	Zinc	7.96	3.28
	Aluminum	23.66	9.68
	Oil & Grease	78.07	78.07
	Total Suspended Solids	117.11	85.88
	pH	Within the range of 7.5 to 10.0 at all times.	

(b) Continuous Rod Casting - Contact Cooling Water

Pollutant or Pollutant Property		Maximum for Any One Day	Maximum for Monthly Average
mg/kkg (lb/billion lbs) of aluminum cast by continuous methods			
119	Chromium	38.55	15.63
121	Cyanide	20.84	8.34
128	Zinc	106.28	43.76
	Aluminum	315.73	129.21
	Oil & Grease	1,042.00	1,042.00
	Total Suspended Solids	1,563.00	1,146.20
	pH	Within the range of 7.5 to 10.0 at all times.	

(c) Continuous Rod Casting - Spent Lubricant

Pollutant or Pollutant Property		Maximum for Any One Day	Maximum for Monthly Average
mg/kkg (lb/billion lbs) of aluminum cast by continuous methods			
119	Chromium	0.68	0.28
121	Cyanide	0.37	0.15
128	Zinc	1.88	0.77
	Aluminum	5.58	2.29
	Oil & Grease	18.43	18.43
	Total Suspended Solids	27.65	20.27
	pH	Within the range of 7.5 to 10.0 at all times.	

(d) Solution Heat Treatment - Contact Cooling Water

Pollutant or Pollutant Property		Maximum for Any One Day	Maximum for Monthly Average
mg/kkg (lb/billion lbs) of aluminum quenched			
119	Chromium	753.69	305.55
121	Cyanide	407.40	162.96
128	Zinc	2,077.74	855.54
	Aluminum	6,172.11	2,525.88
	Oil & Grease	20,370.00	20,370.00
	Total Suspended Solids	30,555.00	22,407.00
	pH	Within the range of 7.5 to 10.0 at all times.	

(e) Cleaning or Etching - Rinse

Pollutant or Pollutant Property		Maximum for Any One Day	Maximum for Monthly Average
	mg/kkg (lb/billion lbs) of aluminum cleaned or etched		
119	Chromium	623.82	252.90
121	Cyanide	337.20	134.88
128	Zinc	1,719.72	708.12
	Aluminum	5,108.58	2,090.64
	Oil & Grease	16,860.00	16,860.00
	Total Suspended Solids	25,290.00	18,546.00
	pH	Within the range of 7.5 to 10.0 at all times.	

(f) Cleaning or Etching - Scrubber Liquor

Pollutant or Pollutant Property		Maximum for Any One Day	Maximum for Monthly Average
	mg/kkg (lb/billion lbs) of aluminum cleaned or etched		
119	Chromium	715.21	289.95
121	Cyanide	386.60	154.64
128	Zinc	1,971.66	811.86
	Aluminum	5,856.99	2,396.92
	Oil & Grease	19,330.00	19,330.00
	Total Suspended Solids	28,995.00	21,263.00
	pH	Within the range of 7.5 to 10.0 at all times.	

F. NSPS FOR THE DRAWING WITH EMULSIONS OR SOAPS SUBCATEGORY

(a) Drawing With Emulsions or Soaps - Core Waste Streams

Pollutant or Pollutant Property		Maximum for Any One Day	Maximum for Monthly Average
	mg/kkg (lb/billion lbs) of aluminum drawn with emulsions or soaps		
119	Chromium	156.99	63.65
121	Cyanide	84.86	33.94
128	Zinc	432.79	178.21
	Aluminum	1,285.63	526.13
	Oil & Grease	4,243.00	4,243.00
	Total Suspended Solids	6,364.50	4,667.30
	pH	Within the range of 7.5 to 10.0 at all times.	

(b) Continuous Rod Casting - Contact Cooling Water

	Pollutant or Pollutant Property	Maximum for Any One Day	Maximum for Monthly Average
	mg/kkg (lb/billion lbs) of aluminum cast by continuous methods		
119	Chromium	38.55	15.63
121	Cyanide	20.84	8.34
128	Zinc	106.28	43.76
	Aluminum	315.73	129.21
	Oil & Grease	1,042.00	1,042.00
	Total Suspended Solids	1,563.00	1,146.20
	pH	Within the range of 7.5 to 10.0 at all times.	

(c) Continuous Rod Casting - Spent Lubricant

	Pollutant or Pollutant Property	Maximum for Any One Day	Maximum for Monthly Average
	mg/kkg (lb/billion lbs) of aluminum cast by continuous methods		
119	Chromium	0.68	0.28
121	Cyanide	0.37	0.15
128	Zinc	1.88	0.77
	Aluminum	5.58	2.29
	Oil & Grease	18.43	18.43
	Total Suspended Solids	27.65	20.27
	pH	Within the range of 7.5 to 10.0 at all times.	

(d) Solution Heat Treatment - Contact Cooling Water

	Pollutant or Pollutant Property	Maximum for Any One Day	Maximum for Monthly Average
	mg/kkg (lb/billion lbs) of aluminum quenched		
119	Chromium	753.69	305.55
121	Cyanide	407.40	162.96
128	Zinc	2,077.74	855.54
	Aluminum	6,172.11	2,525.88
	Oil & Grease	20,370.00	20,370.00
	Total Suspended Solids	30,555.00	22,407.00
	pH	Within the range of 7.5 to 10.0 at all times.	

(e) Cleaning or Etching - Rinse

	Pollutant or Pollutant Property	Maximum for Any One Day	Maximum for Monthly Average
	mg/kkg (lb/billion lbs) of aluminum cleaned or etched		
119	Chromium	623.82	252.90
121	Cyanide	337.20	134.88
128	Zinc	1,719.72	708.12
	Aluminum	5,108.58	2,090.64
	Oil & Grease	16,860.00	16,860.00
	Total Suspended Solids	25,290.00	18,546.00
	pH	Within the range of 7.5 to 10.0 at all times.	

(f) Cleaning or Etching - Scrubber Liquor

	Pollutant or Pollutant Property	Maximum for Any One Day	Maximum for Monthly Average
	mg/kkg (lb/billion lbs) of aluminum cleaned or etched		
119	Chromium	715.21	289.95
121	Cyanide	386.60	154.64
128	Zinc	1,971.66	811.86
	Aluminum	5,856.99	2,396.92
	Oil & Grease	19,330.00	19,330.00
	Total Suspended Solids	28,995.00	21,263.00
	pH	Within the range of 7.5 to 10.0 at all times.	

5. PSES is being proposed based on the treatment effectiveness achievable by the application of oil skimming and chemical precipitation and sedimentation (lime and settle) technology and in-process flow reduction control methods. The following pretreatment standards are being proposed for existing sources:

A. PSES FOR THE ROLLING WITH NEAT OILS SUBCATEGORY

(a) Rolling With Neat Oils - Core Waste Streams Without An Annealing Furnace Scrubber

	Pollutant or Pollutant Property	Maximum for Any One Day	Maximum for Monthly Average
	mg/kkg (lb/billion lbs) of aluminum rolled with neat oils		
119	Chromium	6.96	2.82
121	Cyanide	4.81	1.99
128	Zinc	22.05	9.28
	Total Toxic Organics (TTO)	11.44	-
	Oil & Grease*	331.60	198.96

(b) Rolling With Neat Oils - Core Waste Streams With An Annealing Furnace Scrubber

	Pollutant or Pollutant Property	Maximum for Any One Day	Maximum for Monthly Average
	mg/kkg (lb/billion lbs) of aluminum rolled with neat oils		
119	Chromium	18.03	7.30
121	Cyanide	12.45	5.15
128	Zinc	57.10	24.04
	Total Toxic Organics (TTO)	29.62	-
	Oil & Grease*	858.60	515.16

*Alternate monitoring limit - oil and grease may be substituted for TTO.

(c) Continuous Sheet Casting - Spent Lubricant

Pollutant or Pollutant Property		Maximum for Any One Day	Maximum for Monthly Average
mg/kkg (lb/billion lbs) of aluminum cast by continuous methods			
119	Chromium	0.77	0.31
121	Cyanide	0.53	0.22
128	Zinc	2.45	1.03
	Total Toxic Organics (TTO)	1.27	-
	Oil & Grease*	36.86	22.12

(d) Solution Heat Treatment - Contact Cooling Water

Pollutant or Pollutant Property		Maximum for Any One Day	Maximum for Monthly Average
mg/kkg (lb/billion lbs) of aluminum quenched			
119	Chromium	855.54	346.29
121	Cyanide	590.73	244.44
128	Zinc	2,709.21	1,140.72
	Total Toxic Organics (TTO)	1,405.53	-
	Oil & Grease*	40,740.00	24,440.00

(e) Cleaning or Etching - Rinse

Pollutant or Pollutant Property		Maximum for Any One Day	Maximum for Monthly Average
mg/kkg (lb/billion lbs) of aluminum cleaned or etched			
119	Chromium	708.12	286.62
121	Cyanide	488.94	202.32
128	Zinc	2,242.38	944.16
	Total Toxic Organics (TTO)	1,163.34	-
	Oil & Grease*	33,720.00	20,232.00

*Alternate monitoring limit - oil and grease may be substituted for TTO.

(f) Cleaning or Etching - Scrubber Liquor

Pollutant or Pollutant Property		Maximum for Any One Day	Maximum for Monthly Average
mg/kkg (lb/billion lbs) of aluminum cleaned or etched			
119	Chromium	811.86	328.61
121	Cyanide	560.57	231.96
128	Zinc	2,570.89	1,082.48
	Total Toxic Organics (TTO)	1,333.77	-
	Oil & Grease*	38,660.00	23,196.00

B. PSES FOR THE ROLLING WITH EMULSIONS SUBCATEGORY

(a) Rolling With Emulsions - Core Waste Streams

Pollutant or Pollutant Property		Maximum for Any One Day	Maximum for Monthly Average
mg/kkg (lb/billion lbs) of aluminum rolled with emulsions			
119	Chromium	38.26	15.49
121	Cyanide	26.42	10.93
128	Zinc	121.15	51.01
	Total Toxic Organics (TTO)	62.85	-
	Oil & Grease*	1,821.80	1,093.08

(b) Direct Chill Casting - Contact Cooling Water

Pollutant or Pollutant Property		Maximum for Any One Day	Maximum for Monthly Average
mg/kkg (lb/billion lbs) of aluminum cast by direct chill methods			
119	Chromium	839.58	339.83
121	Cyanide	579.71	239.88
128	Zinc	2,658.67	1,119.44
	Total Toxic Organics (TTO)	1,379.31	-
	Oil & Grease*	39,980.00	23,988.00

*Alternate monitoring limit - oil and grease may be substituted for TTO.

(c) Solution Heat Treatment - Contact Cooling Water

Pollutant or Pollutant Property		Maximum for Any One Day	Maximum for Monthly Average
		mg/kkg (lb/billion lbs) of aluminum quenched	
119	Chromium	855.54	346.29
121	Cyanide	590.73	244.44
128	Zinc	2,709.21	1,140.72
	Total Toxic Organics (TTO)	1,405.53	-
	Oil & Grease*	40,740.00	24,440.00

(d) Cleaning or Etching - Rinse

Pollutant or Pollutant Property		Maximum for Any One Day	Maximum for Monthly Average
		mg/kkg (lb/billion lbs) of aluminum cleaned or etched	
119	Chromium	708.12	286.62
121	Cyanide	488.94	202.32
128	Zinc	2,242.38	944.16
	Total Toxic Organics (TTO)	1,163.34	-
	Oil & Grease*	33,720.00	20,232.00

(e) Cleaning or Etching - Scrubber Liquor

Pollutant or Pollutant Property		Maximum for Any One Day	Maximum for Monthly Average
		mg/kkg (lb/billion lbs) of aluminum cleaned or etched	
119	Chromium	811.86	328.61
121	Cyanide	560.57	231.96
128	Zinc	2,570.89	1,082.48
	Total Toxic Organics (TTO)	1,333.77	-
	Oil & Grease*	38,660.00	23,196.00

*Alternate monitoring limit - oil and grease may be substituted for TTO.

C. PSES FOR THE EXTRUSION SUBCATEGORY

(a) Extrusion - Core Waste Streams

Pollutant or Pollutant Property		Maximum for Any One Day	Maximum for Monthly Average
		mg/kkg (lb/billion lbs) of aluminum extruded	
119	Chromium	125.20	50.68
121	Cyanide	86.45	35.77
128	Zinc	396.47	166.94
	Total Toxic Organics (TTO)	205.69	-
	Oil & Grease*	5,962.00	3,577.20

(b) Direct Chill Casting - Contact Cooling Water

Pollutant or Pollutant Property		Maximum for Any One Day	Maximum for Monthly Average
		mg/kkg (lb/billion lbs) of aluminum cast by direct chill methods	
119	Chromium	839.58	339.83
121	Cyanide	579.71	239.88
128	Zinc	2,658.67	1,119.44
	Total Toxic Organics (TTO)	1,379.31	-
	Oil & Grease*	39,980.00	23,988.00

(c) Solution and Press Heat Treatment - Contact Cooling Water

Pollutant or Pollutant Property		Maximum for Any One Day	Maximum for Monthly Average
		mg/kkg (lb/billion lbs) of aluminum quenched	
119	Chromium	855.54	346.29
121	Cyanide	590.73	244.44
128	Zinc	2,709.21	1,140.72
	Total Toxic Organics (TTO)	1,405.53	-
	Oil & Grease*	40,740.00	24,440.00

*Alternate monitoring limit - oil and grease may be substituted for TTO.

(d) Cleaning or Etching - Rinse

Pollutant or Pollutant Property		Maximum for Any One Day	Maximum for Monthly Average
	mg/kkg (lb/billion lbs) of aluminum cleaned or etched		
119	Chromium	708.12	286.62
121	Cyanide	488.94	202.32
128	Zinc	2,242.38	944.16
	Total Toxic Organics (TTO)	1,163.34	-
	Oil & Grease*	33,720.00	20,232.00

(e) Cleaning or Etching - Scrubber Liquor

Pollutant or Pollutant Property		Maximum for Any One Day	Maximum for Monthly Average
	mg/kkg (lb/billion lbs) of aluminum cleaned or etched		
119	Chromium	811.86	328.61
121	Cyanide	560.57	231.96
128	Zinc	2,570.89	1,082.48
	Total Toxic Organics (TTO)	1,333.77	-
	Oil & Grease*	38,660.00	23,196.00

D. PSES FOR THE FORGING SUBCATEGORY

(a) Forging - Core Waste Streams

Pollutant or Pollutant Property		Maximum for Any One Day	Maximum for Monthly Average
	mg/kkg (lb/billion lbs) of aluminum forged		
119	Chromium	3.28	1.33
121	Cyanide	2.26	0.94
128	Zinc	10.38	4.37
	Total Toxic Organics (TTO)	5.39	-
	Oil & Grease*	156.14	93.68

*Alternate monitoring limit - oil and grease may be substituted for TTO.

(b) Forging - Scrubber Liquor

Pollutant or Pollutant Property		Maximum for Any One Day	Maximum for Monthly Average
		mg/kkg (lb/billion lbs) of aluminum forged	
119	Chromium	39.61	16.03
121	Cyanide	27.35	11.32
128	Zinc	125.43	52.81
	Total Toxic Organics (TTO)	65.07	-
	Oil & Grease*	1,886.20	1,131.72

(c) Solution Heat Treatment - Contact Cooling Water

Pollutant or Pollutant Property		Maximum for Any One Day	Maximum for Monthly Average
		mg/kkg (lb/billion lbs) of aluminum quenched	
119	Chromium	855.54	346.29
121	Cyanide	590.73	244.44
128	Zinc	2,709.21	1,140.72
	Total Toxic Organics (TTO)	1,405.53	-
	Oil & Grease*	40,740.00	24,440.00

(d) Cleaning or Etching - Rinse

Pollutant or Pollutant Property		Maximum for Any One Day	Maximum for Monthly Average
		mg/kkg (lb/billion lbs) of aluminum cleaned or etched	
119	Chromium	708.12	286.62
121	Cyanide	488.94	202.32
128	Zinc	2,242.38	944.16
	Total Toxic Organics (TTO)	1,163.34	-
	Oil & Grease*	33,720.00	20,232.00

*Alternate monitoring limit - oil and grease may be substituted for TTO.

(e) Cleaning or Etching - Scrubber Liquor

Pollutant or Pollutant Property		Maximum for Any One Day	Maximum for Monthly Average
	mg/kkg (lb/billion lbs) of aluminum cleaned or etched		
119	Chromium	811.86	328.61
121	Cyanide	560.57	231.96
128	Zinc	2,570.89	1,082.48
	Total Toxic Organics (TTO)	1,333.77	-
	Oil & Grease*	38,660.00	23,196.00

E. PSES FOR THE DRAWING WITH NEAT OILS SUBCATEGORY

(a) Drawing With Neat Oils - Core Waste Streams

Pollutant or Pollutant Property		Maximum for Any One Day	Maximum for Monthly Average
	mg/kkg (lb/billion lbs) of aluminum drawn with neat oils		
119	Chromium	3.28	1.33
121	Cyanide	2.26	0.94
128	Zinc	10.38	4.37
	Total Toxic Organics (TTO)	5.39	-
	Oil & Grease*	156.14	93.68

(b) Continuous Rod Casting - Contact Cooling Water

Pollutant or Pollutant Property		Maximum for Any One Day	Maximum for Monthly Average
	mg/kkg (lb/billion lbs) of aluminum cast by continuous methods		
119	Chromium	43.76	17.71
121	Cyanide	30.22	12.50
128	Zinc	138.59	58.35
	Total Toxic Organics (TTO)	71.90	-
	Oil & Grease*	2,084.00	1,250.40

*Alternate monitoring limit - oil and grease may be substituted for TTO.

(c) Continuous Rod Casting - Spent Lubricant

Pollutant or Pollutant Property		Maximum for Any One Day	Maximum for Monthly Average
mg/kkg (lb/billion lbs) of aluminum cast by continuous methods			
119	Chromium	0.77	0.31
121	Cyanide	0.53	0.22
128	Zinc	2.45	1.03
	Total Toxic Organics (TTO)	1.27	-
	Oil & Grease*	36.86	22.12

(d) Solution Heat Treatment - Contact Cooling Water

Pollutant or Pollutant Property		Maximum for Any One Day	Maximum for Monthly Average
mg/kkg (lb/billion lbs) of aluminum quenched			
119	Chromium	855.54	346.29
121	Cyanide	590.73	244.44
128	Zinc	2,709.21	1,140.72
	Total Toxic Organics (TTO)	1,405.53	-
	Oil & Grease*	40,740.00	24,440.00

(e) Cleaning or Etching - Rinse

Pollutant or Pollutant Property		Maximum for Any One Day	Maximum for Monthly Average
mg/kkg (lb/billion lbs) of aluminum cleaned or etched			
119	Chromium	708.12	286.62
121	Cyanide	488.94	202.32
128	Zinc	2,242.38	944.16
	Total Toxic Organics (TTO)	1,163.34	-
	Oil & Grease*	33,720.00	20,232.00

*Alternate monitoring limit - oil and grease may be substituted for TTO.

(f) Cleaning or Etching - Scrubber Liquor

Pollutant or Pollutant Property		Maximum for Any One Day	Maximum for Monthly Average
mg/kkg (lb/billion lbs) of aluminum cleaned or etched			
119	Chromium	811.86	328.61
121	Cyanide	560.57	231.96
128	Zinc	2,570.89	1,082.48
	Total Toxic Organics (TTO)	1,333.77	-
	Oil & Grease*	38,660.00	23,196.00

F. PSES FOR THE DRAWING WITH EMULSIONS OR SOAPS SUBCATEGORY

(a) Drawing With Emulsions or Soaps - Core Waste Streams

Pollutant or Pollutant Property		Maximum for Any One Day	Maximum for Monthly Average
mg/kkg (lb/billion lbs) of aluminum drawn with emulsions or soaps			
119	Chromium	178.21	72.13
121	Cyanide	123.05	50.92
128	Zinc	564.32	237.61
	Total Toxic Organics (TTO)	292.77	-
	Oil & Grease*	8,486.00	5,091.60

(b) Continuous Rod Casting - Contact Cooling Water

Pollutant or Pollutant Property		Maximum for Any One Day	Maximum for Monthly Average
mg/kkg (lb/billion lbs) of aluminum cast by continuous methods			
119	Chromium	43.76	17.71
121	Cyanide	30.22	12.50
128	Zinc	138.59	58.35
	Total Toxic Organics (TTO)	71.90	-
	Oil & Grease*	2,084.00	1,250.40

*Alternate monitoring limit - oil and grease may be substituted for TTO.

(c) Continuous Rod Casting - Spent Lubricant

Pollutant or Pollutant Property		Maximum for Any One Day	Maximum for Monthly Average
mg/kkg (lb/billion lbs) of aluminum cast by continuous methods			
119	Chromium	0.77	0.31
121	Cyanide	0.53	0.22
128	Zinc	2.45	1.03
	Total Toxic Organics (TTO)	1.27	-
	Oil & Grease*	36.86	22.12

(d) Solution Heat Treatment - Contact Cooling Water

Pollutant or Pollutant Property		Maximum for Any One Day	Maximum for Monthly Average
mg/kkg (lb/billion lbs) of aluminum quenched			
119	Chromium	855.54	346.29
121	Cyanide	590.73	244.44
128	Zinc	2,709.21	1,140.72
	Total Toxic Organics (TTO)	1,405.53	-
	Oil & Grease*	40,740.00	24,440.00

(e) Cleaning or Etching - Rinse

Pollutant or Pollutant Property		Maximum for Any One Day	Maximum for Monthly Average
mg/kkg (lb/billion lbs) of aluminum cleaned or etched			
119	Chromium	708.12	286.62
121	Cyanide	488.94	202.32
128	Zinc	2,242.38	944.16
	Total Toxic Organics (TTO)	1,163.34	-
	Oil & Grease*	33,720.00	20,232.00

*Alternate monitoring limit - oil and grease may be substituted for TTO.

(f) Cleaning or Etching - Scrubber Liquor

Pollutant or Pollutant Property		Maximum for Any One Day	Maximum for Monthly Average
	mg/kkg (lb/billion lbs) of aluminum cleaned or etched		
119	Chromium	811.86	328.61
121	Cyanide	560.57	231.96
128	Zinc	2,570.89	1,082.48
	Total Toxic Organics (TTO)	1,333.77	-
	Oil & Grease*	38,660.00	23,196.00

6. PSNS is being proposed based on the treatment effectiveness achievable by the application of oil skimming and chemical precipitation, sedimentation and filtration (lime, settle, and filter) technology and in-process flow reduction control methods. The following pretreatment standards are being proposed for new sources:

A. PSNS FOR THE ROLLING WITH NEAT OILS SUBCATEGORY

(a) Rolling With Neat Oils - Core Waste Streams Without An Annealing Furnace Scrubber

Pollutant or Pollutant Property		Maximum for Any One Day	Maximum for Monthly Average
	mg/kkg (lb/billion lbs) of aluminum rolled with neat oils		
119	Chromium	6.13	2.49
121	Cyanide	3.32	1.33
128	Zinc	16.91	6.96
	Total Toxic Organics (TTO)	11.44	-
	Oil & Grease*	165.80	165.80

*Alternate monitoring limit - oil and grease may be substituted for TTO.

(b) Rolling With Neat Oils - Core Waste Streams With An Annealing Furnace Scrubber

	Pollutant or Pollutant Property	Maximum for Any One Day	Maximum for Monthly Average
	mg/kkg (lb/billion lbs) of aluminum rolled with neat oils		
119	Chromium	15.88	6.44
121	Cyanide	8.59	3.43
128	Zinc	43.79	18.03
	Total Toxic Organics (TTO)	29.62	-
	Oil & Grease*	429.30	429.30

(c) Continuous Sheet Casting - Spent Lubricant

	Pollutant or Pollutant Property	Maximum for Any One Day	Maximum for Monthly Average
	mg/kkg (lb/billion lbs) of aluminum cast by continuous methods		
119	Chromium	0.68	0.28
121	Cyanide	0.37	0.15
128	Zinc	1.88	0.77
	Total Toxic Organics (TTO)	1.27	-
	Oil & Grease*	18.43	18.43

(d) Solution Heat Treatment - Contact Cooling Water

	Pollutant or Pollutant Property	Maximum for Any One Day	Maximum for Monthly Average
	mg/kkg (lb/billion lbs) of aluminum quenched		
119	Chromium	753.69	305.55
121	Cyanide	407.40	162.96
128	Zinc	2,077.74	855.54
	Total Toxic Organics (TTO)	1,405.53	-
	Oil & Grease*	20,370.00	20,370.00

*Alternate monitoring limit - oil and grease may be substituted for TTO.

(e) Cleaning or Etching - Rinse

Pollutant or Pollutant Property		Maximum for Any One Day	Maximum for Monthly Average
	mg/kkg (lb/billion lbs) of aluminum cleaned or etched		
119	Chromium	623.82	252.90
121	Cyanide	337.20	134.88
128	Zinc	1,719.72	708.12
	Total Toxic Organics (TTO)	1,163.34	-
	Oil & Grease*	16,860.00	16,860.00

(f) Cleaning or Etching - Scrubber Liquor

Pollutant or Pollutant Property		Maximum for Any One Day	Maximum for Monthly Average
	mg/kkg (lb/billion lbs) of aluminum cleaned or etched		
119	Chromium	715.21	289.95
121	Cyanide	386.60	154.64
128	Zinc	1,971.66	811.86
	Total Toxic Organics (TTO)	1,333.77	-
	Oil & Grease*	19,330.00	19,330.00

B. PSNS FOR THE ROLLING WITH EMULSIONS SUBCATEGORY

(a) Rolling With Emulsions - Core Waste Streams

Pollutant or Pollutant Property		Maximum for Any One Day	Maximum for Monthly Average
	mg/kkg (lb/billion lbs) of aluminum rolled with emulsions		
119	Chromium	33.70	13.66
121	Cyanide	18.22	7.29
128	Zinc	92.92	38.26
	Total Toxic Organics (TTO)	62.85	-
	Oil & Grease*	910.90	910.90

*Alternate monitoring limit - oil and grease may be substituted for TTO.

(b) Direct Chill Casting - Contact Cooling Water

Pollutant or Pollutant Property		Maximum for Any One Day	Maximum for Monthly Average
mg/kkg (lb/billion lbs) of aluminum cast by direct chill methods			
119	Chromium	739.63	299.85
121	Cyanide	399.80	159.92
128	Zinc	2,038.98	839.58
	Total Toxic Organics (TTO)	1,379.31	-
	Oil & Grease*	19,990.00	19,990.00

(c) Solution Heat Treatment - Contact Cooling Water

Pollutant or Pollutant Property		Maximum for Any One Day	Maximum for Monthly Average
mg/kkg (lb/billion lbs) of aluminum quenched			
119	Chromium	753.69	305.55
121	Cyanide	407.40	162.96
128	Zinc	2,077.74	855.54
	Total Toxic Organics (TTO)	1,405.53	-
	Oil & Grease*	20,370.00	20,370.00

(d) Cleaning or Etching - Rinse

Pollutant or Pollutant Property		Maximum for Any One Day	Maximum for Monthly Average
mg/kkg (lb/billion lbs) of aluminum cleaned or etched			
119	Chromium	623.82	252.90
121	Cyanide	337.20	134.88
128	Zinc	1,719.72	708.12
	Total Toxic Organics (TTO)	1,163.34	-
	Oil & Grease*	16,860.00	16,860.00

*Alternate monitoring limit - oil and grease may be substituted for TTO.

(e) Cleaning or Etching - Scrubber Liquor

Pollutant or Pollutant Property		Maximum for Any One Day	Maximum for Monthly Average
	mg/kkg (lb/billion lbs) of aluminum cleaned or etched		
119	Chromium	715.21	289.95
121	Cyanide	386.60	154.64
128	Zinc	1,971.66	811.86
	Total Toxic Organics (TTO)	1,333.77	-
	Oil & Grease*	19,330.00	19,330.00

C. PSNS FOR THE EXTRUSION SUBCATEGORY

(a) Extrusion - Core Waste Streams

Pollutant or Pollutant Property		Maximum for Any One Day	Maximum for Monthly Average
	mg/kkg (lb/billion lbs) of aluminum extruded		
119	Chromium	110.30	44.72
121	Cyanide	59.62	23.85
128	Zinc	304.06	125.20
	Total Toxic Organics (TTO)	205.69	-
	Oil & Grease*	2,981.00	2,981.00

(b) Direct Chill Casting - Contact Cooling Water

Pollutant or Pollutant Property		Maximum for Any One Day	Maximum for Monthly Average
	mg/kkg (lb/billion lbs) of aluminum cast by direct chill methods		
119	Chromium	739.63	299.85
121	Cyanide	399.80	159.92
128	Zinc	2,038.98	839.58
	Total Toxic Organics (TTO)	1,379.31	-
	Oil & Grease*	19,990.00	19,990.00

*Alternate monitoring limit - oil and grease may be substituted for TTO.

(c) Solution and Press Heat Treatment - Contact Cooling Water

Pollutant or Pollutant Property		Maximum for Any One Day	Maximum for Monthly Average
		mg/kkg (lb/billion lbs) of aluminum quenched	
119	Chromium	753.69	305.55
121	Cyanide	407.40	162.96
128	Zinc	2,077.74	855.54
	Total Toxic Organics (TTO)	1,405.53	-
	Oil & Grease*	20,370.00	20,370.00

(d) Cleaning or Etching - Rinse

Pollutant or Pollutant Property		Maximum for Any One Day	Maximum for Monthly Average
		mg/kkg (lb/billion lbs) of aluminum cleaned or etched	
119	Chromium	623.82	252.90
121	Cyanide	337.20	134.88
128	Zinc	1,719.72	708.12
	Total Toxic Organics (TTO)	1,163.34	-
	Oil & Grease*	16,860.00	16,860.00

(e) Cleaning or Etching - Scrubber Liquor

Pollutant or Pollutant Property		Maximum for Any One Day	Maximum for Monthly Average
		mg/kkg (lb/billion lbs) of aluminum cleaned or etched	
119	Chromium	715.21	289.95
121	Cyanide	386.60	154.64
128	Zinc	1,971.66	811.86
	Total Toxic Organics (TTO)	1,333.77	-
	Oil & Grease*	19,330.00	19,330.00

*Alternate monitoring limit - oil and grease may be substituted for TTO.

D. PSNS FOR THE FORGING SUBCATEGORY

(a) Forging - Core Waste Streams

Pollutant or Pollutant Property		Maximum for Any One Day	Maximum for Monthly Average
		mg/kkg (lb/billion lbs) of aluminum forged	
119	Chromium	2.89	1.17
121	Cyanide	1.56	0.62
128	Zinc	7.96	3.28
	Total Toxic Organics (TTO)	5.39	-
	Oil & Grease*	78.07	78.07

(b) Forging - Scrubber Liquor

Pollutant or Pollutant Property		Maximum for Any One Day	Maximum for Monthly Average
		mg/kkg (lb/billion lbs) of aluminum forged	
119	Chromium	34.89	14.15
121	Cyanide	18.86	7.54
128	Zinc	96.20	39.61
	Total Toxic Organics (TTO)	65.07	-
	Oil & Grease*	943.10	943.10

(c) Solution Heat Treatment - Contact Cooling Water

Pollutant or Pollutant Property		Maximum for Any One Day	Maximum for Monthly Average
		mg/kkg (lb/billion lbs) of aluminum quenched	
119	Chromium	753.69	305.55
121	Cyanide	407.40	162.96
128	Zinc	2,077.74	855.54
	Total Toxic Organics (TTO)	1,405.53	-
	Oil & Grease*	20,370.00	20,370.00

*Alternate monitoring limit - oil and grease may be substituted for TTO.

(d) Cleaning or Etching - Rinse

Pollutant or Pollutant Property		Maximum for Any One Day	Maximum for Monthly Average
	mg/kkg (lb/billion lbs) of aluminum cleaned or etched		
119	Chromium	623.82	252.90
121	Cyanide	337.20	134.88
128	Zinc	1,719.72	708.12
	Total Toxic Organics (TTO)	1,163.34	-
	Oil & Grease*	16,860.00	16,860.00

(e) Cleaning or Etching - Scrubber Liquor

Pollutant or Pollutant Property		Maximum for Any One Day	Maximum for Monthly Average
	mg/kkg (lb/billion lbs) of aluminum cleaned or etched		
119	Chromium	715.21	289.95
121	Cyanide	386.60	154.64
128	Zinc	1,971.66	811.86
	Total Toxic Organics (TTO)	1,333.77	-
	Oil & Grease*	19,330.00	19,330.00

E. PSNS FOR THE DRAWING WITH NEAT OILS SUBCATEGORY

(a) Drawing With Neat Oils - Core Waste Streams

Pollutant or Pollutant Property		Maximum for Any One Day	Maximum for Monthly Average
	mg/kkg (lb/billion lbs) of aluminum drawn with neat oils		
119	Chromium	2.89	1.17
121	Cyanide	1.56	0.62
128	Zinc	7.96	3.28
	Total Toxic Organics (TTO)	5.39	-
	Oil & Grease*	78.07	78.07

*Alternate monitoring limit - oil and grease may be substituted for TTO.

(b) Continuous Rod Casting - Contact Cooling Water

Pollutant or Pollutant Property	Maximum for Any One Day	Maximum for Monthly Average
mg/kkg (lb/billion lbs) of aluminum cast by continuous methods		
119 Chromium	38.55	15.63
121 Cyanide	20.84	8.34
128 Zinc	106.28	43.76
Total Toxic Organics (TTO)	71.90	-
Oil & Grease*	1,042.00	1,042.00

(c) Continuous Rod Casting - Spent Lubricant

Pollutant or Pollutant Property	Maximum for Any One Day	Maximum for Monthly Average
mg/kkg (lb/billion lbs) of aluminum cast by continuous methods		
119 Chromium	0.68	0.28
121 Cyanide	0.37	0.15
128 Zinc	1.88	0.77
Total Toxic Organics (TTO)	1.27	-
Oil & Grease*	18.43	18.43

(d) Solution Heat Treatment - Contact Cooling Water

Pollutant or Pollutant Property	Maximum for Any One Day	Maximum for Monthly Average
mg/kkg (lb/billion lbs) of aluminum quenched		
119 Chromium	753.69	305.55
121 Cyanide	407.40	162.96
128 Zinc	2,077.74	855.54
Total Toxic Organics (TTO)	1,405.53	-
Oil & Grease*	20,370.00	20,370.00

*Alternate monitoring limit - oil and grease may be substituted for TTO.

(e) Cleaning or Etching - Rinse

Pollutant or Pollutant Property		Maximum for Any One Day	Maximum for Monthly Average
	mg/kkg (lb/billion lbs) of aluminum cleaned or etched		
119	Chromium	623.82	252.90
121	Cyanide	337.20	134.88
128	Zinc	1,719.72	708.12
	Total Toxic Organics (TTO)	1,163.34	-
	Oil & Grease*	16,860.00	16,860.00

(f) Cleaning or Etching - Scrubber Liquor

Pollutant or Pollutant Property		Maximum for Any One Day	Maximum for Monthly Average
	mg/kkg (lb/billion lbs) of aluminum cleaned or etched		
119	Chromium	715.21	289.95
121	Cyanide	386.60	154.64
128	Zinc	1,971.66	811.86
	Total Toxic Organics (TTO)	1,333.77	-
	Oil & Grease*	19,330.00	19,330.00

F. PSNS FOR THE DRAWING WITH EMULSIONS OR SOAPS SUBCATEGORY

(a) Drawing With Emulsions or Soaps - Core Waste Streams

Pollutant or Pollutant Property		Maximum for Any One Day	Maximum for Monthly Average
	mg/kkg (lb/billion lbs) of aluminum drawn with emulsions or soaps		
119	Chromium	156.99	63.65
121	Cyanide	84.86	33.94
128	Zinc	432.79	178.21
	Total Toxic Organics (TTO)	292.77	-
	Oil & Grease*	4,243.00	4,243.00

*Alternate monitoring limit - oil and grease may be substituted for TTO.

(b) Continuous Rod Casting - Contact Cooling Water

Pollutant or Pollutant Property		Maximum for Any One Day	Maximum for Monthly Average
mg/kkg (lb/billion lbs) of aluminum cast by continuous methods			
119	Chromium	38.55	15.63
121	Cyanide	20.84	8.34
128	Zinc	106.28	43.76
	Total Toxic Organics (TTO)	71.90	-
	Oil & Grease*	1,042.00	1,042.00

(c) Continuous Rod Casting - Spent Lubricant

Pollutant or Pollutant Property		Maximum for Any One Day	Maximum for Monthly Average
mg/kkg (lb/billion lbs) of aluminum cast by continuous methods			
119	Chromium	0.68	0.28
121	Cyanide	0.37	0.15
128	Zinc	1.88	0.77
	Total Toxic Organics (TTO)	1.27	-
	Oil & Grease*	18.43	18.43

(d) Solution Heat Treatment - Contact Cooling Water

Pollutant or Pollutant Property		Maximum for Any One Day	Maximum for Monthly Average
mg/kkg (lb/billion lbs) of aluminum quenched			
119	Chromium	753.69	305.55
121	Cyanide	407.40	162.96
128	Zinc	2,077.74	855.54
	Total Toxic Organics (TTO)	1,405.53	-
	Oil & Grease*	20,370.00	20,370.00

*Alternate monitoring limit - oil and grease may be substituted for TTO.

(e) Cleaning or Etching - Rinse

Pollutant or Pollutant Property		Maximum for Any One Day	Maximum for Monthly Average
	mg/kkg (lb/billion lbs) of aluminum cleaned or etched		
119	Chromium	623.82	252.90
121	Cyanide	337.20	134.88
128	Zinc	1,719.72	708.12
	Total Toxic Organics (TTO)	1,163.34	-
	Oil & Grease*	16,860.00	16,860.00

(f) Cleaning or Etching - Scrubber Liquor

Pollutant or Pollutant Property		Maximum for Any One Day	Maximum for Monthly Average
	mg/kkg (lb/billion lbs) of aluminum cleaned or etched		
119	Chromium	715.21	289.95
121	Cyanide	386.60	154.64
128	Zinc	1,971.66	811.86
	Total Toxic Organics (TTO)	1,333.77	-
	Oil & Grease*	19,330.00	19,330.00

*Alternate monitoring limit - oil and grease may be substituted for TTO.

7. EPA is considering promulgating BAT effluent limitations more stringent than the limitations now proposed for BAT. The limitations are based upon the treatment effectiveness achieved through the control and treatment used to form the basis of BAT, with the addition of filtration. In the event that the Agency decides to promulgate these more stringent limitations, the following would apply:

A. ALTERNATE BAT MASS LIMITATIONS FOR THE ROLLING WITH NEAT OILS SUBCATEGORY

(a) Rolling With Neat Oils - Core Waste Streams Without An Annealing Furnace Scrubber

Pollutant or Pollutant Property		Maximum for Any One Day	Maximum for Monthly Average
mg/kkg (lb/billion lbs) of aluminum rolled with neat oils			
119	Chromium	6.13	2.49
121	Cyanide	3.32	1.33
128	Zinc	16.91	6.96
	Aluminum	50.24	20.56

(b) Rolling With Neat Oils - Core Waste Streams With An Annealing Furnace Scrubber

Pollutant or Pollutant Property		Maximum for Any One Day	Maximum for Monthly Average
mg/kkg (lb/billion lbs) of aluminum rolled with neat oils			
119	Chromium	15.88	6.44
121	Cyanide	8.59	3.43
128	Zinc	43.79	18.03
	Aluminum	130.08	53.23

(c) Continuous Sheet Casting - Spent Lubricant

Pollutant or Pollutant Property		Maximum for Any One Day	Maximum for Monthly Average
mg/kkg (lb/billion lbs) of aluminum cast by continuous methods			
119	Chromium	0.68	0.28
121	Cyanide	0.37	0.15
128	Zinc	1.88	0.77
	Aluminum	5.58	2.29

(d) Solution Heat Treatment - Contact Cooling Water

Pollutant or Pollutant Property		Maximum for Any One Day	Maximum for Monthly Average
		mg/kkg (lb/billion lbs) of aluminum quenched	
119	Chromium	753.69	305.55
121	Cyanide	407.40	162.96
128	Zinc	2,077.74	855.54
	Aluminum	6,172.11	2,525.88

(e) Cleaning or Etching - Rinse

Pollutant or Pollutant Property		Maximum for Any One Day	Maximum for Monthly Average
		mg/kkg (lb/billion lbs) of aluminum cleaned or etched	
119	Chromium	623.82	252.90
121	Cyanide	337.20	134.88
128	Zinc	1,719.72	708.12
	Aluminum	5,108.58	2,090.64

(f) Cleaning or Etching - Scrubber Liquor

Pollutant or Pollutant Property		Maximum for Any One Day	Maximum for Monthly Average
		mg/kkg (lb/billion lbs) of aluminum cleaned or etched	
119	Chromium	715.21	289.95
121	Cyanide	386.60	154.64
128	Zinc	1,971.66	811.86
	Aluminum	5,856.99	2,396.92

B. ALTERNATE BAT MASS LIMITATIONS FOR THE ROLLING WITH EMULSIONS SUBCATEGORY

(a) Rolling With Emulsions - Core Waste Streams

Pollutant or Pollutant Property		Maximum for Any One Day	Maximum for Monthly Average
		mg/kkg (lb/billion lbs) of aluminum rolled with emulsions	
119	Chromium	33.70	13.66
121	Cyanide	8.22	7.29
128	Zinc	92.91	38.26
	Aluminum	276.00	112.95

(b) Direct Chill Casting - Contact Cooling Water

Pollutant or Pollutant Property		Maximum for Any One Day	Maximum for Monthly Average
mg/kkg (lb/billion lbs) of aluminum cast by direct chill methods			
119	Chromium	739.63	299.85
121	Cyanide	399.80	159.92
128	Zinc	2,038.98	839.58
	Aluminum	6,056.97	2,478.76

(c) Solution Heat Treatment - Contact Cooling Water

Pollutant or Pollutant Property		Maximum for Any One Day	Maximum for Monthly Average
mg/kkg (lb/billion lbs) of aluminum quenched			
119	Chromium	753.69	305.55
121	Cyanide	407.40	162.96
128	Zinc	2,077.74	855.54
	Aluminum	6,172.11	2,525.88

(d) Cleaning or Etching - Rinse

Pollutant or Pollutant Property		Maximum for Any One Day	Maximum for Monthly Average
mg/kkg (lb/billion lbs) of aluminum cleaned or etched			
119	Chromium	623.82	252.90
121	Cyanide	337.20	134.88
128	Zinc	1,719.72	708.12
	Aluminum	5,108.58	2,090.64

(e) Cleaning or Etching - Scrubber Liquor

Pollutant or Pollutant Property		Maximum for Any One Day	Maximum for Monthly Average
mg/kkg (lb/billion lbs) of aluminum cleaned or etched			
119	Chromium	715.21	289.95
121	Cyanide	386.60	154.64
128	Zinc	1,971.66	811.86
	Aluminum	5,856.99	2,396.92

C. ALTERNATE BAT MASS LIMITATIONS FOR THE EXTRUSION SUBCATEGORY

(a) Extrusion - Core Waste Streams

Pollutant or Pollutant Property		Maximum for Any One Day	Maximum for Monthly Average
		mg/kkg (lb/billion lbs) of aluminum extruded	
119	Chromium	110.30	44.72
121	Cyanide	59.62	23.85
128	Zinc	304.06	125.20
	Aluminum	903.24	369.64

(b) Direct Chill Casting - Contact Cooling Water

Pollutant or Pollutant Property		Maximum for Any One Day	Maximum for Monthly Average
		mg/kkg (lb/billion lbs) of aluminum cast by direct chill methods	
119	Chromium	739.63	299.85
121	Cyanide	399.80	159.92
128	Zinc	2,038.98	839.58
	Aluminum	6,056.97	2,478.76

(c) Solution and Press Heat Treatment - Contact Cooling Water

Pollutant or Pollutant Property		Maximum for Any One Day	Maximum for Monthly Average
		mg/kkg (lb/billion lbs) of aluminum quenched	
119	Chromium	753.69	305.55
121	Cyanide	407.40	162.96
128	Zinc	2,077.74	855.54
	Aluminum	6,172.11	2,525.88

(d) Cleaning or Etching - Rinse

Pollutant or Pollutant Property		Maximum for Any One Day	Maximum for Monthly Average
		mg/kkg (lb/billion lbs) of aluminum cleaned or etched	
119	Chromium	623.82	252.90
121	Cyanide	337.20	134.88
128	Zinc	1,719.72	708.12
	Aluminum	5,108.58	2,090.64

(e) Cleaning or Etching - Scrubber Liquor

Pollutant or Pollutant Property		Maximum for Any One Day	Maximum for Monthly Average
mg/kkg (lb/billion lbs) of aluminum cleaned or etched			
119	Chromium	715.21	289.95
121	Cyanide	386.60	154.64
128	Zinc	1,971.66	811.86
	Aluminum	5,856.99	2,396.92

D. ALTERNATE BAT MASS LIMITATIONS FOR THE DRAWING WITH NEAT OILS SUBCATEGORY

(a) Drawing With Neat Oils - Core Waste Streams

Pollutant or Pollutant Property		Maximum for Any One Day	Maximum for Monthly Average
mg/kkg (lb/billion lbs) of aluminum drawn with neat oils			
119	Chromium	2.89	1.17
121	Cyanide	1.56	0.62
128	Zinc	7.96	3.28
	Aluminum	23.66	9.68

(b) Continuous Rod Casting - Contact Cooling Water

Pollutant or Pollutant Property		Maximum for Any One Day	Maximum for Monthly Average
mg/kkg (lb/billion lbs) of aluminum cast by continuous methods			
119	Chromium	38.55	15.63
121	Cyanide	20.84	8.34
128	Zinc	106.28	43.76
	Aluminum	315.73	129.21

(c) Continuous Rod Casting - Spent Lubricant

Pollutant or Pollutant Property		Maximum for Any One Day	Maximum for Monthly Average
mg/kkg (lb/billion lbs) of aluminum cast by continuous methods			
119	Chromium	0.68	0.28
121	Cyanide	0.37	0.15
128	Zinc	1.88	0.77
	Aluminum	5.58	2.29

(d) Solution Heat Treatment - Contact Cooling Water

Pollutant or Pollutant Property		Maximum for Any One Day	Maximum for Monthly Average
mg/kkg (lb/billion lbs) of aluminum quenched			
119	Chromium	753.69	305.55
121	Cyanide	407.40	162.96
128	Zinc	2,077.74	855.54
	Aluminum	6,172.11	2,525.88

(e) Cleaning or Etching - Rinse

Pollutant or Pollutant Property		Maximum for Any One Day	Maximum for Monthly Average
mg/kkg (lb/billion lbs) of aluminum cleaned or etched			
119	Chromium	623.82	252.90
121	Cyanide	337.20	134.88
128	Zinc	1,719.72	708.12
	Aluminum	5,108.58	2,090.64

(f) Cleaning or Etching - Scrubber Liquor

Pollutant or Pollutant Property		Maximum for Any One Day	Maximum for Monthly Average
mg/kkg (lb/billion lbs) of aluminum cleaned or etched			
119	Chromium	715.21	289.95
121	Cyanide	386.60	154.64
128	Zinc	1,971.66	811.86
	Aluminum	5,856.99	2,396.92

E. ALTERNATE BAT MASS LIMITATIONS FOR THE DRAWING WITH EMULSIONS OR SOAPS SUBCATEGORY

(a) Drawing With Emulsions or Soaps - Core Waste Streams

Pollutant or Pollutant Property		Maximum for Any One Day	Maximum for Monthly Average
mg/kkg (lb/billion lbs) of aluminum drawn with emulsions or soaps			
119	Chromium	156.99	63.65
121	Cyanide	84.86	33.94
128	Zinc	432.79	178.21
	Aluminum	1,285.63	526.13

(b) Continuous Rod Casting - Contact Cooling Water

Pollutant or Pollutant Property		Maximum for Any One Day	Maximum for Monthly Average
mg/kkg (lb/billion lbs) of aluminum cast by continuous methods			
119	Chromium	38.55	15.63
121	Cyanide	20.84	8.34
128	Zinc	106.28	43.76
	Aluminum	315.73	129.21

(c) Continuous Rod Casting - Spent Lubricant

Pollutant or Pollutant Property		Maximum for Any One Day	Maximum for Monthly Average
mg/kkg (lb/billion lbs) of aluminum cast by continuous methods			
119	Chromium	0.68	0.28
121	Cyanide	0.37	0.15
128	Zinc	1.88	0.77
	Aluminum	5.58	2.29

(d) Solution Heat Treatment - Contact Cooling Water

Pollutant or Pollutant Property		Maximum for Any One Day	Maximum for Monthly Average
mg/kkg (lb/billion lbs) of aluminum quenched			
119	Chromium	753.69	305.55
121	Cyanide	407.40	162.96
128	Zinc	2,077.74	855.54
	Aluminum	6,172.11	2,525.88

(e) Cleaning or Etching - Rinse

Pollutant or Pollutant Property		Maximum for Any One Day	Maximum for Monthly Average
	mg/kkg (lb/billion lbs) of aluminum cleaned or etched		
119	Chromium	623.82	252.90
121	Cyanide	337.20	134.88
128	Zinc	1,719.72	708.12
	Aluminum	5,108.58	2,090.64

(f) Cleaning or Etching - Scrubber Liquor

Pollutant or Pollutant Property		Maximum for Any One Day	Maximum for Monthly Average
	mg/kkg (lb/billion lbs) of aluminum cleaned or etched		
119	Chromium	715.21	289.95
121	Cyanide	386.60	154.64
128	Zinc	1,971.66	811.86
	Aluminum	5,856.99	2,396.92

8. EPA is considering promulgating PSES standards more stringent than the standards now proposed for PSES. The standards are based upon the treatment effectiveness achieved through the control and treatment used to form the basis of PSES, with the addition of filtration. In the event that the Agency decides to promulgate these more stringent standards, the following would apply:

A. ALTERNATE PSES FOR THE ROLLING WITH NEAT OILS SUBCATEGORY

(a) Rolling With Neat Oils - Core Waste Streams Without An Annealing Furnace Scrubber

Pollutant or Pollutant Property		Maximum for Any One Day	Maximum for Monthly Average
	mg/kkg (lb/billion lbs) of aluminum rolled with neat oils		
119	Chromium	6.13	2.49
121	Cyanide	3.32	1.33
128	Zinc	16.91	6.96
	Total Toxic Organics (TTO)	11.44	-
	Oil & Grease*	165.80	165.80

*Alternate monitoring limit - oil and grease may be substituted for TTO.

(b) Rolling With Neat Oils - Core Waste Streams With An Annealing Furnace Scrubber

	Pollutant or Pollutant Property	Maximum for Any One Day	Maximum for Monthly Average
	mg/kkg (lb/billion lbs) of aluminum rolled with neat oils		
119	Chromium	15.88	6.44
121	Cyanide	8.59	3.43
128	Zinc	43.79	18.03
	Total Toxic Organics (TTO)	29.62	-
	Oil & Grease*	429.30	429.30

(c) Continuous Sheet Casting - Spent Lubricant

	Pollutant or Pollutant Property	Maximum for Any One Day	Maximum for Monthly Average
	mg/kkg (lb/billion lbs) of aluminum cast by continuous methods		
119	Chromium	0.68	0.28
121	Cyanide	0.37	0.15
128	Zinc	1.88	0.77
	Total Toxic Organics (TTO)	1.27	-
	Oil & Grease*	18.43	18.43

(d) Solution Heat Treatment - Contact Cooling Water

	Pollutant or Pollutant Property	Maximum for Any One Day	Maximum for Monthly Average
	mg/kkg (lb/billion lbs) of aluminum quenched		
119	Chromium	753.69	305.55
121	Cyanide	407.40	162.96
128	Zinc	2,077.74	855.54
	Total Toxic Organics (TTO)	1,405.53	-
	Oil & Grease*	20,370.00	20,370.00

*Alternate monitoring limit - oil and grease may be substituted for TTO.

(e) Cleaning or Etching - Rinse

Pollutant or Pollutant Property		Maximum for Any One Day	Maximum for Monthly Average
	mg/kkg (lb/billion lbs) of aluminum cleaned or etched		
119	Chromium	623.82	252.90
121	Cyanide	337.20	134.88
128	Zinc	1,719.72	708.12
	Total Toxic Organics (TTO)	1,163.34	-
	Oil & Grease*	16,860.00	16,860.00

(f) Cleaning or Etching - Scrubber Liquor

Pollutant or Pollutant Property		Maximum for Any One Day	Maximum for Monthly Average
	mg/kkg (lb/billion lbs) of aluminum cleaned or etched		
119	Chromium	715.21	289.95
121	Cyanide	386.60	154.64
128	Zinc	1,971.66	811.86
	Total Toxic Organics (TTO)	1,333.77	-
	Oil & Grease*	19,330.00	19,330.00

B. ALTERNATE PSES FOR THE ROLLING WITH EMULSIONS SUBCATEGORY

(a) Rolling With Emulsions - Core Waste Streams

Pollutant or Pollutant Property		Maximum for Any One Day	Maximum for Monthly Average
	mg/kkg (lb/billion lbs) of aluminum rolled with emulsions		
119	Chromium	33.70	13.66
121	Cyanide	18.22	7.29
128	Zinc	92.92	38.26
	Total Toxic Organics (TTO)	62.85	-
	Oil & Grease*	910.90	910.90

*Alternate monitoring limit - oil and grease may be substituted for TTO.

(b) Direct Chill Casting - Contact Cooling Water

Pollutant or Pollutant Property		Maximum for Any One Day	Maximum for Monthly Average
mg/kkg (lb/billion lbs) of aluminum cast by direct chill methods			
119	Chromium	739.63	299.85
121	Cyanide	399.80	159.92
128	Zinc	2,038.98	839.58
	Total Toxic Organics (TTO)	1,379.31	-
	Oil & Grease*	19,990.00	19,990.00

(c) Solution Heat Treatment - Contact Cooling Water

Pollutant or Pollutant Property		Maximum for Any One Day	Maximum for Monthly Average
mg/kkg (lb/billion lbs) of aluminum quenched			
119	Chromium	753.69	305.55
121	Cyanide	407.40	162.96
128	Zinc	2,077.74	855.54
	Total Toxic Organics (TTO)	1,405.53	-
	Oil & Grease*	20,370.00	20,370.00

(d) Cleaning or Etching - Rinse

Pollutant or Pollutant Property		Maximum for Any One Day	Maximum for Monthly Average
mg/kkg (lb/billion lbs) of aluminum cleaned or etched			
119	Chromium	623.82	252.90
121	Cyanide	337.20	134.88
128	Zinc	1,719.72	708.12
	Total Toxic Organics (TTO)	1,163.34	-
	Oil & Grease*	16,860.00	16,860.00

*Alternate monitoring limit - oil and grease may be substituted for TTO.

(e) Cleaning or Etching - Scrubber Liquor

Pollutant or Pollutant Property		Maximum for Any One Day	Maximum for Monthly Average
mg/kkg (lb/billion lbs) of aluminum cleaned or etched			
119	Chromium	715.21	289.95
121	Cyanide	386.60	154.64
128	Zinc	1,971.66	811.86
	Total Toxic Organics (TTO)	1,333.77	-
	Oil & Grease*	19,330.00	19,330.00

C. ALTERNATE PSES FOR THE EXTRUSION SUBCATEGORY

(a) Extrusion - Core Waste Streams

Pollutant or Pollutant Property		Maximum for Any One Day	Maximum for Monthly Average
mg/kkg (lb/billion lbs) of aluminum extruded			
119	Chromium	110.30	44.72
121	Cyanide	59.62	23.85
128	Zinc	304.06	125.20
	Total Toxic Organics (TTO)	205.69	-
	Oil & Grease*	2,981.00	2,981.00

(b) Direct Chill Casting - Contact Cooling Water

Pollutant or Pollutant Property		Maximum for Any One Day	Maximum for Monthly Average
mg/kkg (lb/billion lbs) of aluminum cast by direct chill methods			
119	Chromium	739.63	299.85
121	Cyanide	399.80	159.92
128	Zinc	2,038.98	839.58
	Total Toxic Organics (TTO)	1,379.31	-
	Oil & Grease*	19,990.00	19,990.00

*Alternate monitoring limit - oil and grease may be substituted for TTO.

(c) Solution and Press Heat Treatment - Contact Cooling Water

Pollutant or Pollutant Property		Maximum for Any One Day	Maximum for Monthly Average
		mg/kkg (lb/billion lbs) of aluminum quenched	
119	Chromium	753.69	305.55
121	Cyanide	407.40	162.96
128	Zinc	2,077.74	855.54
	Total Toxic Organics (TTO)	1,405.53	-
	Oil & Grease*	20,370.00	20,370.00

(d) Cleaning or Etching - Rinse

Pollutant or Pollutant Property		Maximum for Any One Day	Maximum for Monthly Average
		mg/kkg (lb/billion lbs) of aluminum cleaned or etched	
119	Chromium	623.82	252.90
121	Cyanide	337.20	134.88
128	Zinc	1,719.72	708.12
	Total Toxic Organics (TTO)	1,163.34	-
	Oil & Grease*	16,860.00	16,860.00

(e) Cleaning or Etching - Scrubber Liquor

Pollutant or Pollutant Property		Maximum for Any One Day	Maximum for Monthly Average
		mg/kkg (lb/billion lbs) of aluminum cleaned or etched	
119	Chromium	715.21	289.95
121	Cyanide	386.60	154.64
128	Zinc	1,971.66	811.86
	Total Toxic Organics (TTO)	1,333.77	-
	Oil & Grease*	19,330.00	19,330.00

*Alternate monitoring limit - oil and grease may be substituted for TTO.

D. ALTERNATE PSES FOR THE FORGING SUBCATEGORY

(a) Forging - Core Waste Streams

Pollutant or Pollutant Property		Maximum for Any One Day	Maximum for Monthly Average
		mg/kkg (lb/billion lbs) of aluminum forged	
119	Chromium	2.89	1.17
121	Cyanide	1.56	0.62
128	Zinc	7.96	3.28
	Total Toxic Organics (TTO)	5.39	-
	Oil & Grease*	78.07	78.07

(b) Forging - Scrubber Liquor

Pollutant or Pollutant Property		Maximum for Any One Day	Maximum for Monthly Average
		mg/kkg (lb/billion lbs) of aluminum forged	
119	Chromium	34.89	14.15
121	Cyanide	18.86	7.54
128	Zinc	96.20	39.61
	Total Toxic Organics (TTO)	65.07	-
	Oil & Grease*	943.10	943.10

(c) Solution Heat Treatment - Contact Cooling Water

Pollutant or Pollutant Property		Maximum for Any One Day	Maximum for Monthly Average
		mg/kkg (lb/billion lbs) of aluminum quenched	
119	Chromium	753.69	305.55
121	Cyanide	407.40	162.96
128	Zinc	2,077.74	855.54
	Total Toxic Organics (TTO)	1,405.53	-
	Oil & Grease*	20,370.00	20,370.00

*Alternate monitoring limit - oil and grease may be substituted for TTO.

(d) Cleaning or Etching - Rinse

	Pollutant or Pollutant Property	Maximum for Any One Day	Maximum for Monthly Average
	mg/kkg (lb/billion lbs) of aluminum cleaned or etched		
119	Chromium	623.82	252.90
121	Cyanide	337.20	134.88
128	Zinc	1,719.72	708.12
	Total Toxic Organics (TTO)	1,163.34	-
	Oil & Grease*	16,860.00	16,860.00

(e) Cleaning or Etching - Scrubber Liquor

	Pollutant or Pollutant Property	Maximum for Any One Day	Maximum for Monthly Average
	mg/kkg (lb/billion lbs) of aluminum cleaned or etched		
119	Chromium	715.21	289.95
121	Cyanide	386.60	154.64
128	Zinc	1,971.66	811.86
	Total Toxic Organics (TTO)	1,333.77	-
	Oil & Grease*	19,330.00	19,330.00

E. ALTERNATE PSES FOR THE DRAWING WITH NEAT OILS SUBCATEGORY

(a) Drawing With Neat Oils - Core Waste Streams

	Pollutant or Pollutant Property	Maximum for Any One Day	Maximum for Monthly Average
	mg/kkg (lb/billion lbs) of aluminum drawn with neat oils		
119	Chromium	2.89	1.17
121	Cyanide	1.56	0.62
128	Zinc	7.96	3.28
	Total Toxic Organics (TTO)	5.39	-
	Oil & Grease*	78.07	78.07

*Alternate monitoring limit - oil and grease may be substituted for TTO.

(b) Continuous Rod Casting - Contact Cooling Water

Pollutant or Pollutant Property		Maximum for Any One Day	Maximum for Monthly Average
mg/kkg (lb/billion lbs) of aluminum cast by continuous methods			
119	Chromium	38.55	15.63
121	Cyanide	20.84	8.34
128	Zinc	106.28	43.76
	Total Toxic Organics (TTO)	71.90	-
	Oil & Grease*	1,042.00	1,042.00

(c) Continuous Rod Casting - Spent Lubricant

Pollutant or Pollutant Property		Maximum for Any One Day	Maximum for Monthly Average
mg/kkg (lb/billion lbs) of aluminum cast by continuous methods			
119	Chromium	0.68	0.28
121	Cyanide	0.37	0.15
128	Zinc	1.88	0.77
	Total Toxic Organics (TTO)	1.27	-
	Oil & Grease*	18.43	18.43

(d) Solution Heat Treatment - Contact Cooling Water

Pollutant or Pollutant Property		Maximum for Any One Day	Maximum for Monthly Average
mg/kkg (lb/billion lbs) of aluminum quenched			
119	Chromium	753.69	305.55
121	Cyanide	407.40	162.96
128	Zinc	2,077.74	855.54
	Total Toxic Organics (TTO)	1,405.53	-
	Oil & Grease*	20,370.00	20,370.00

*Alternate monitoring limit - oil and grease may be substituted for TTO.

(e) Cleaning or Etching - Rinse

Pollutant or Pollutant Property		Maximum for Any One Day	Maximum for Monthly Average
	mg/kkg (lb/billion lbs) of aluminum cleaned or etched		
119	Chromium	623.82	252.90
121	Cyanide	337.20	134.88
128	Zinc	1,719.72	708.12
	Total Toxic Organics (TTO)	1,163.34	-
	Oil & Grease*	16,860.00	16,860.00

(f) Cleaning or Etching - Scrubber Liquor

Pollutant or Pollutant Property		Maximum for Any One Day	Maximum for Monthly Average
	mg/kkg (lb/billion lbs) of aluminum cleaned or etched		
119	Chromium	715.21	289.95
121	Cyanide	386.60	154.64
128	Zinc	1,971.66	811.86
	Total Toxic Organics (TTO)	1,333.77	-
	Oil & Grease*	19,330.00	19,330.00

F. ALTERNATE PSES FOR THE DRAWING WITH EMULSIONS OR SOAPS SUBCATEGORY

(a) Drawing With Emulsions or Soaps - Core Waste Streams

Pollutant or Pollutant Property		Maximum for Any One Day	Maximum for Monthly Average
	mg/kkg (lb/billion lbs) of aluminum drawn with emulsions or soaps		
119	Chromium	156.99	63.65
121	Cyanide	84.86	33.94
128	Zinc	432.79	178.21
	Total Toxic Organics (TTO)	292.77	-
	Oil & Grease*	4,243.00	4,243.00

*Alternate monitoring limit - oil and grease may be substituted for TTO.

(b) Continuous Rod Casting - Contact Cooling Water

Pollutant or Pollutant Property		Maximum for Any One Day	Maximum for Monthly Average
mg/kkg (lb/billion lbs) of aluminum cast by continuous methods			
119	Chromium	38.55	15.63
121	Cyanide	20.84	8.34
128	Zinc	106.28	43.76
	Total Toxic Organics (TTO)	71.90	-
	Oil & Grease*	1,042.00	1,042.00

(c) Continuous Rod Casting - Spent Lubricant

Pollutant or Pollutant Property		Maximum for Any One Day	Maximum for Monthly Average
mg/kkg (lb/billion lbs) of aluminum cast by continuous methods			
119	Chromium	0.68	0.28
121	Cyanide	0.37	0.15
128	Zinc	1.88	0.77
	Total Toxic Organics (TTO)	1.27	-
	Oil & Grease*	18.43	18.43

(d) Solution Heat Treatment - Contact Cooling Water

Pollutant or Pollutant Property		Maximum for Any One Day	Maximum for Monthly Average
mg/kkg (lb/billion lbs) of aluminum quenched			
119	Chromium	753.69	305.55
121	Cyanide	407.40	162.96
128	Zinc	2,077.74	855.54
	Total Toxic Organics (TTO)	1,405.53	-
	Oil & Grease*	20,370.00	20,370.00

*Alternate monitoring limit - oil and grease may be substituted for TTO.

(e) Cleaning or Etching - Rinse

	Pollutant or Pollutant Property	Maximum for Any One Day	Maximum for Monthly Average
	mg/kkg (lb/billion lbs) of aluminum cleaned or etched		
119	Chromium	623.82	252.90
121	Cyanide	337.20	134.88
128	Zinc	1,719.72	708.12
	Total Toxic Organics (TTO)	1,163.34	-
	Oil & Grease*	16,860.00	16,860.00

(f) Cleaning or Etching - Scrubber Liquor

	Pollutant or Pollutant Property	Maximum for Any One Day	Maximum for Monthly Average
	mg/kkg (lb/billion lbs) of aluminum cleaned or etched		
119	Chromium	715.21	289.95
121	Cyanide	386.60	154.64
128	Zinc	1,971.66	811.86
	Total Toxic Organics (TTO)	1,333.77	-
	Oil & Grease*	19,330.00	19,330.00

*Alternate monitoring limit - oil and grease may be substituted for TTO.

SECTION III

INTRODUCTION

PURPOSE AND AUTHORITY

The Federal Water Pollution Control Act Amendments of 1972 established a comprehensive program to "restore and maintain the chemical, physical, and biological integrity of the Nation's waters," under Section 101(a). By July 1, 1977, existing industrial dischargers were required to achieve "effluent limitations requiring the application of the best practicable control technology currently available" (BPT), under Section 301(b)(1)(A); and by July 1, 1983, these dischargers were required to achieve "effluent limitations requiring the application of the best available technology economically achievable . . . which will result in reasonable further progress toward the national goal of eliminating the discharge of all pollutants" (BAT), under Section 301(b)(2)(A). New industrial direct dischargers were required to comply with Section 306 new source performance standards (NSPS), based on best available demonstrated technology; existing and new dischargers to publicly owned treatment works (POTW) were subject to pretreatment standards under Sections 307(b) (PSES) and (c) (PSNS), respectively, of the Act. While the requirements for direct dischargers were to be incorporated into National Pollutant Discharge Elimination System (NPDES) permits issued under Section 402 of the Act, pretreatment standards were made enforceable directly against discharges to a POTW (indirect dischargers). Although Section 402(a)(1) of the 1972 Act authorized the setting of NPDES permit requirements for direct dischargers on a case-by-case basis, Congress intended that, for the most part, control requirements would be based on the degree of effluent reduction attainable through the application of BPT and BAT. Moreover, Sections 304(c) and 306 of the Act required promulgation of regulations for new sources (NSPS); and Sections 304(f), 307(b), and 307(c) required promulgation of regulations for pretreatment standards. In addition to these regulations for designated industry categories, Section 307(a) of the Act required the Administrator to promulgate effluent standards applicable to all dischargers of toxic pollutants. Finally, Section 301(a) of the Act authorized the Administrator to prescribe any additional regulations "necessary to carry out his functions" under the Act.

EPA was unable to promulgate many of these regulations by the dates contained in the Act. In 1976, EPA was sued by several environmental groups and in settlement of this lawsuit, EPA and the plaintiffs executed a "Settlement Agreement," which was approved by the Court. This Agreement required EPA to develop a

program and adhere to a schedule for promulgating 21 major industries' BAT effluent limitations guidelines, pretreatment standards, and new source performance standards for 65 "priority" pollutants and classes of pollutants. See Settlement Agreement in Natural Resources Defense Council, Inc. v. Train, 8 ERC 2120 (D.D.C. 1976), modified 12 ERC 1833 (D.D.C. 1979).

On December 27, 1977, the President signed into law amendments to the Federal Water Pollution Control Act (P.L. 95-217). The Act, as amended, is commonly referred to as the Clean Water Act. Although this Act makes several important changes in the federal water pollution control program, its most significant feature is its incorporation of several of the basic elements of the Settlement Agreement program for toxic pollution control. Sections 301(b)(2)(A) and 301(b)(2)(C) of the Act now require the achievement, by July 1, 1984, of effluent limitations requiring application of BAT for toxic pollutants, including the 65 priority pollutants and classes of pollutants (the same priority pollutants as listed in Natural Resources Defense Council v. Train), which Congress declared toxic under Section 307(a) of the Act. Likewise, EPA's programs for new source performance standards and pretreatment standards are now aimed principally at control of these toxic pollutants. Moreover, to strengthen the toxics control program, Congress added Section 304(e) to the Act, authorizing the Administrator to prescribe "best management practices" (BMP) to prevent the release of toxic and hazardous pollutants from plant site runoff, spillage or leaks, sludge or waste disposal, and drainage from raw material storage associated with, or ancillary to, the manufacturing or treatment process.

In keeping with its emphasis on toxic pollutants, the Clean Water Act also revised the control program for nontoxic pollutants. Instead of BAT for "conventional" pollutants identified under Section 304(a)(4) (including biological oxygen demand, suspended solids, oil and grease, fecal coliform, and pH), the new Section 301(b)(2)(E) requires achievement, by July 1, 1984, of "effluent limitations requiring the application of the best conventional pollutant control technology" (BCT). The factors considered in assessing BCT for an industry include a two-part "cost-reasonableness" test [Section 304(b)(4)(B)], American Paper Institute v. EPA, 660 F.2d 954 (4th Cir. 1981). The first part compares the cost for private industry to reduce its conventional pollutants with the costs to publicly owned treatment works for similar levels of reduction in their discharge of pollutants. The second part examines the cost effectiveness of additional industrial treatment beyond BPT. For nontoxic, nonconventional pollutants, Sections 301(b)(2)(A) and (b)(2)(F) require achievement of BAT effluent limitations within three years after their establishment or not later than July 1, 1984.

The purpose of this report is to provide the supporting technical data regarding water use, pollutants, and treatment technologies for BPT, BAT, NSPS, PSES, or PSNS effluent limitations that EPA is proposing for the aluminum forming category under Sections 301, 304, 306, 307, and 501 of the Clean Water Act.

METHODOLOGY

Approach of Study

EPA gathered and evaluated technical data in the course of developing these guidelines in order to perform the following tasks:

1. To profile the category with regard to the production, manufacturing processes, geographical distribution, potential wastewater streams, and discharge mode of aluminum forming plants.

2. To subcategorize, if necessary, in order to permit regulation of the aluminum forming category in an equitable and manageable way. This was done by taking all of the factors mentioned above plus others into account.

3. To characterize wastewater, detailing water use, wastewater discharge, and the occurrence of priority, conventional, and nonconventional pollutants, in waste streams from aluminum forming processes.

4. To select pollutant parameters--those priority or conventional pollutants present at significant concentrations in wastewater streams--that should be considered for regulation.

5. To consider control and treatment technologies and select alternative methods for reducing pollutant discharge in this category.

6. To evaluate the costs of implementing the alternative control and treatment technologies.

7. To present possible regulatory alternatives.

Data Collection and Methods of Evaluation

Literature Review. EPA reviewed and evaluated existing literature for background information to clarify and define various aspects of the aluminum forming category and to determine general characteristics and trends in production processes and wastewater treatment technology. Review of current literature continued

throughout the development of these guidelines. Information gathered in this review was used, along with information from other sources as discussed below, in the following specific areas:

- Introduction (Section III) - description of production processes and the associated lubricants and wastewater streams.

- Subcategorization (Section IV) - identification of differences in manufacturing process technology and their potential effect on associated wastewater streams.

- Selection of Pollutant Parameters (Section VI) - information regarding the toxicity and potential sources of the pollutants identified in wastewater from aluminum forming processes.

- Control and Treatment Technology (Section VII) - information on alternative controls and treatments and corresponding effects on pollutant removal.

- Costs (Section VIII) - formulation of the methodology and equations for determining the current capital and annual costs to apply the selected treatment alternatives.

Existing Data. Information related to aluminum forming processes, wastewater, or wastewater treatment technology was compiled from a number of sources. Technical data gathered for development of guidelines for related categories, such as the nonferrous metals category, were reviewed and incorporated into this guideline, where applicable.

The concentration or mass loading of pollutant parameters in wastewater effluent discharges are monitored and reported as required by individual state agencies. These historical data are available from NPDES monitoring reports.

Frequent contact has been maintained with industry personnel. Contributions from these sources were particularly useful for clarifying differences in production processes.

Data Collection Portfolios. The aluminum forming plants were surveyed to gather information regarding plant size, age and production, the production processes used, and the quantity, treatment, and disposal of wastewater generated at these plants. This information was requested in data collection portfolios (dcp's) mailed to all companies known or believed to be involved in the forming of aluminum or aluminum alloys. The original mailing list was compiled from the following sources:

- U.S. Department of Commerce, Directory of Aluminum Suppliers in the United States, Revised January 1978.

- Architectural Aluminum Manufacturers Association, Membership Directory, 1977.

- Aluminum Foil Containing Manufacturers Association, Membership Roster as of May 1, 1978.

- Dun & Bradstreet, Inc., Million Dollar Directory, 1978.

In all, dcp's were sent to 580 firms. Approximately 95 percent of the companies responded to the survey. In many cases, companies contacted were not actually members of the aluminum forming category as it is defined by the Agency. Where firms had aluminum forming operations at more than one location, a dcp was returned for each plant. A total of 279 dcp's applicable to the aluminum forming category were returned. Two plants have since ceased aluminum forming operations, therefore, a total of 277 plants were included in the data base. In cases where the dcp responses were incomplete or unclear, additional information was requested by telephone or letter.

The dcp responses were interpreted individually, and the following data were documented for future reference and evaluation:

- Company name, plant address, and name of the contact listed in the dcp.

- Plant discharge status as direct (to surface water), indirect (to POTW), or zero discharge.

- Production process streams present at the plant, as well as associated flow rates; production rates; operating hours; wastewater treatment, reuse, or disposal methods; the quantity and nature of process chemicals; and the percent of any soluble oil used in emulsified mixtures.

- Capital and annual treatment costs.

- Availability of pollutant monitoring data provided by the plant.

The summary listing of this information provided a consistent, systematic method of evaluating and summarizing the dcp responses. In addition, procedures were developed to simplify subsequent analyses. The procedures developed had the following capabilities:

- Selection and listing of plants containing specific production process streams or treatment technologies.

- Summation of the number of plants containing specific process stream and treatment combinations.

- Calculation of the percent recycle present for specific streams and summation of the number of plants recycling this stream within various percent recycle ranges.

- Calculation of annual production values associated with each process stream and summation of the number of plants with these process streams having production values within various ranges.

- Calculation of water use and blowdown from individual process streams.

The calculated information and summaries were important and frequently used in the development of this guideline. Summaries were used in the category profile, evaluation of subcategorization, and analysis of in-place treatment and control technologies. Calculated information was used in the determination of water use and discharge values for the conversion of pollutant concentrations to mass loadings.

GENERAL PROFILE OF THE ALUMINUM FORMING CATEGORY

There are a number of advantages to using aluminum in a wide variety of products. Chief among these are that aluminum is lightweight, tough, resistant to corrosion, and has high electrical conductivity. The major uses of aluminum are in the building and construction industry, transportation industries, the electrical products industry, and in container and package manufacturing.

Products manufactured by aluminum forming operations generally serve as stock for subsequent fabricating operations, as shown in Figure III-1. Cast ingots and billets are the starting point for making sheet and plate, extrusions, forgings, and rod, for use in drawing operations. Rolled aluminum sheet and plate can be used as stock for stampings, can blanks, and roll formed products; as finished products in building, ship and aircraft construction; or as foil. Extrusions can be used as raw stock for forging and drawing; to fabricate final products, such as bumpers, window frames, or light standards; or can be sold as final products, such as beams or extruded tubing. Forgings are either sold as consumer products or used as parts in the production of machinery, aircraft, and engines.

The variety and type of products produced at one location has a large influence on the production capacity of the forming plant, the number of people employed, and the amount of water used. The

capital intensive investment, large source of energy required, and specialized labor force involved in making aluminum sheet, strip, foil, and plate products limit the number of facilities available to meet the demand for these sheet products. Most sheet products are made at a few large plants owned by major companies. Table III-1 summarizes data about these and other products of aluminum forming. A variety of sheet products are often produced at the same location. Other products, such as billets and extrusions, are frequently made in conjunction with the rolled products at these plants.

Tubes, rod, cable, and wire are produced at sites that range in size from very large to small. On a mass basis most drawn products are produced by a few large companies or factories, while the remainder are produced by a number of smaller firms. Employment varies from a few to several hundred people.

Extrusion and forging processes, which produce a wide variety of products, do not require large facilities. Consequently, extrusion and forging products are formed at many sites by a number of companies. Production and employment at facilities using either type of process range from small plants with few workers to large plants with hundreds of employees. Some extrusion plants have other forming operations as well. Forging; however, is usually performed by plants that are not involved in other processes.

Casting in the aluminum forming category, both continuous and direct chill, is done prior to another operation, such as rolling or extrusion. Aluminum billets or ingots are rarely cast at aluminum forming plants for sale to other industries or firms. Stationary casting in this industry usually involves only melted in-plant scrap aluminum. The ingots, frequently called pigs or sows, produced from stationary casting are normally remelted and used as stock for continuous or direct chill casting.

The dcp responses indicate that 156 companies own 277 aluminum forming plants. Five of the companies own 22 percent of the plants, and 16 companies own 42 percent of the production facilities.

Employment data is given in the dcp responses for 248 plants (89 percent of the total). These plants report a total of 28,557 workers involved in aluminum forming. Employment at the individual sites ranges from one to 2,100 people. The employment distribution of aluminum forming workers at the 248 plants is: 69 percent employ fewer than 100 people in aluminum forming operations; 83 percent employ fewer than 200 people in this capacity; and 95 percent employ fewer than 500 people.

Reported production of formed aluminum at individual plant sites ranged from .09 kkg (0.1 ton) to almost 360,000 kkg (400,000 tons) during 1977. The aluminum forming production distribution for the 249 plants, for which 1977 production data were available, is summarized as follows: 75 percent produced less than 9,000 kkg (10,000 tons); 96 percent produced less than 45,000 kkg (50,000 tons); and 98 percent produced less than 180,000 kkg (200,000 tons).

Aluminum forming plants are not limited to any one geographical location. As shown in Figure III-2, plants are found throughout most of the United States, but the majority are located east of the Mississippi River. Population density is not a limiting factor in plant location. Aluminum forming plants tend to be more common in urban areas, but they are frequently found in rural areas as well.

The majority of the aluminum forming plants (55 percent) that reported the age of their facility indicated they were built since 1957. Table III-2 shows the age distribution of aluminum forming plants according to their classification as direct, indirect, and zero discharge type. The dates of most recent modification were reported by 230 plants. The distribution of facilities according to time elapsed since their last major plant modification is given in Table III-3. Of the 277 aluminum forming plants, 44 percent have been modified since 1972.

One hundred fifty-three plants indicated that no wastewater from aluminum forming operations is discharged to either surface waters or a POTW. Of the remaining 124, 58 discharge an effluent from aluminum forming directly to surface waters, and 66 discharge indirectly, sending aluminum forming effluent through a POTW. The volume of aluminum forming wastewater discharged by plants in this category ranges from 0 to 2,896,000 liters per hour (0 to 765,000 gal/hr). The mean volume is approximately 74,000 liters per hour (19,540 gal/hr) for those plants having discharges. Two hundred fifty-nine plants supplied wastewater data. This is less than the total number of aluminum forming plants in the category because several plants did not provide enough information to calculate the flows. Of these 259 plants, 65 percent reported no wastewater discharge from aluminum forming operations; 90 percent discharge less than 19,000 liters per hour (5,000 gal/hr); and 98 percent discharge less than 190,000 liters per hour (50,000 gal/hr). There is no correlation between overall water use and total aluminum production; however, correlations can be developed between water use or wastewater discharge and production on a process basis. This is discussed further in Section V.

Sixty plants reported some form of treatment for wastewater from aluminum forming processes. Another 13 plants mentioned treatment only for wastes not covered under the aluminum forming category. The most common forms of wastewater treatment are pH adjustment, clarification, gravity oil separation (skimming), and lagooning. In-line filtration and cooling towers are frequently used as wastewater controls. Oily wastes are separated into oil and water fractions by emulsion breaking using heat or chemicals. Gravity separation is frequently used to separate neat oil and broken emulsions from the water fraction. The oil portion is usually removed by a contractor, although some plants dispose of it by land application, incineration, or lagooning. Sludges generally are not thickened, but are disposed of without treatment; however, vacuum and pressure filters, centrifuges, and drying beds are occasionally used. Sludge disposal methods include landfill and contractor removal. Disposal of wastewater is being accomplished by discharge to surface waters or a POTW, by contractor removal, or by land application.

ALUMINUM FORMING PROCESSES

Aluminum forming processes, for the purpose of this guideline, are those manufacturing operations in which aluminum or aluminum alloys are shaped into semifinished or mill products by hot or cold working. These manufacturing operations, called core operations (see Section IV), include rolling, extruding, forging and drawing of aluminum. Associated processes, called ancillary operations, such as the casting of aluminum alloys for subsequent forming, heat treatment, cleaning, and etching are also included.

Water is used in combination with oil lubricants, surface processing chemicals, and in contact cooling as a part of these operations in order to achieve specified desired metal characteristics (i.e., tensile strength, malleability, specific surface properties). Water may also be used in wet air pollution control devices (i.e., wet scrubbers, electrostatic precipitators) to collect fumes and particulates. A further discussion of wastewater sources from aluminum forming processes is presented in Section V. Regulatory flow allowances for waste streams under BPT and BAT are presented and discussed in Sections IX and X, respectively.

EPA recognizes that plants sometimes combine nonaluminum forming process and nonprocess wastewater prior to treatment and discharge. Pollutant discharge allowances will be established only for aluminum forming process wastewater, not the nonaluminum process or nonprocess wastewaters under this regulation. The flows and wastewater characteristics are a function of the plant layout and water handling practices. As a result, the pollutant discharge effluent limitation for nonaluminum forming wastewater

streams will be prepared by the permitting authority. These wastewaters are not further discussed in this document or covered by the regulation.

CORE OPERATIONS

Rolling

The rolling process is used to transform cast aluminum ingot into any one of a number of intermediate or final products. Pressure exerted by the rollers as aluminum is passed between them reduces the thickness in the metal and may cause work hardening. Square ingots cast by the direct chill method described previously are often used in the production of wire, rod, and bar. The ingots are usually reduced by hot rolling to elongated forms, known as blooms. Additional hot or cold rolling may be used to produce rod, bar, or wire. Rod is defined as having a solid round cross section 0.95 cm (3/8 inch) or more in diameter. Bar is also identified by a cross section with 0.95 cm (3.8 inch) or more between two parallel sides, but it is not round. Wire is characterized by a diameter of less than 0.95 cm (3/8 inch).

Although the design of rolling mills varies considerably, the principle behind the process is essentially the same. At the rolling mill, aluminum is passed through a set of rolls that reduces the thickness of the metal and increases its length. Two common roll configurations are shown in Figure III-3. Multiple passes through the rolls are usually required, and mills are frequently designed to allow rolling in the reverse direction. For wire, rod, and bar products, grooves in the upper and lower rolls account for the various reductions in cross sectional area.

At sheet mills, ingots are heated to temperatures ranging from 400 to 500°C and hot rolled to form slabs. Hot rolling is usually followed by further reduction of thickness on a cold rolling mill. The hot rolled product is generally limited to plate [typically defined as being greater than or equal to 6.3 mm (0.25 inch) thick]. Cold rolled products are classified as sheet [from 6.3 to 0.15 mm (0.249 to 0.007 inch) thick] and foil [below 0.15 mm (0.006 inch) thick].

As will be discussed later in this section, heat treatment is usually required before and between stages of the rolling process. Ingots are usually made homogeneous in grain structure prior to hot rolling in order to remove the effects of casting on the aluminum's mechanical properties. Annealing is typically required between passes or after cold rolling to keep the metal ductile and remove the effects of work hardening. The kind and degree of heat treatment applied depends on the alloy involved, the nature of the rolling operation, and the properties desired in the product.

It is necessary to use a cooling and lubricating compound during rolling to prevent excessive wear on the rolls, to prevent adhesion of aluminum to the rolls, and to maintain a suitable and uniform rolling temperature. Oil-in-water emulsions, stabilized with emulsifying agents such as soaps and other polar organic materials, are used for this purpose in hot rolling operations. Emulsion concentrations usually vary between 5 and 10 percent oil. Evaporation of the lubricant as it is sprayed on the hot metal serves to cool the rolling process. Mist eliminators may be used to recover rolling emulsions that are dispersed to the atmosphere. The emulsions are typically filtered to remove metal fines and other contaminants and recirculated through the mills. The use of deionized water to replace evaporative and carryover losses and the addition of bactericides and antioxidizing agents are practiced at many plants to increase the life of the emulsions. Nevertheless, the emulsions eventually become rancid or degraded and must be eliminated from circulation either by continuous bleed or periodic discharge. Most cold rolling operations use mineral oil or kerosene-based lubricants rather than water-based compounds to avoid staining the aluminum surface; however, emulsions are used for cold rolling in other countries and, to a limited extent, in the United States. As in hot rolling, mist eliminators are commonly used to collect cold rolling mists in order to recover the rolling oils for reuse.

The steel rolls used in hot and cold rolling operations require periodic machining to remove aluminum buildup and to grind away any cracks or imperfections that appear on the surface of the rolls. Although the survey of the industry indicated that roll grinding with water is practiced, the use of an oil-in-water emulsion is much more common. This emulsion is usually recycled and periodically discharged after treatment with other emulsified waste streams at the plant. Some plants have demonstrated that the discharge of roll grinding emulsions can be avoided by in-line removal using magnetic separation of steel fines from the emulsion or filtration techniques. With this treatment, the emulsion can be recycled indefinitely with no bleed stream other than carryover on the rolls.

Of the plants surveyed, 57 have rolling operations. Twenty-three of these discharge wastewater directly to surface water, nine discharge indirectly through a POTW, and 25 do not discharge process wastewater. The geographical location of plants with aluminum rolling operations is presented in Figure III-4. The annual production of rolled aluminum at these plants during 1977 varied from 270 to 580,000 kkg (300 to 640,000 tons), with a mean value of 200,000 kkg (110,000 tons). The production distribution is summarized as follows: of the 45 rolling operations for which 1977 production data were available, 36 percent produced less than 18,000 kkg (20,000 tons) of aluminum and aluminum alloys; 73 percent produced less than 90,000 kkg (100,000 tons); and 90 percent produced less than 360,000 kkg (400,000 tons).

Extrusion

In the extrusion process, high pressures are applied to a cast billet of aluminum, forcing the metal to flow through a die orifice. The resulting product is an elongated shape or tube of uniform cross sectional area. Extrusions are manufactured using either a mechanical or a hydraulic extrusion press.

There are two basic methods of extrusion practiced in the aluminum forming category:

- direct extrusion, and
- indirect extrusion.

The direct extrusion process is shown schematically in Figure III-5. A heated cylindrical billet is placed into the ingot chamber, and the dummy block and ram are placed into position behind it. Pressure is exerted on the ram by hydraulic or mechanical means, forcing the metal to flow through the die opening. The extrusion is sawed off next to the die, and the dummy block and ingot butt are released. Hollow shapes are produced with the use of a mandrel postioned in the die opening so that the aluminum is forced to flow around it. A less common technique, indirect extrusion, is similar, except that in this method, the die is forced against the billet extruding the metal in the opposite direction through the ram stem. A dummy block is not used in indirect extrusion.

Although aluminum can be extruded cold, it is usually first heated to a temperature ranging from 375 to 525°C, so that little work hardening will be imposed on the product. Heat treatment is frequently used after extrusion to attain the desired mechanical properties. Heat treatment techniques will be described later in this section. At some plants, contact cooling of the extrusion, sometimes called press heat treatment quench, is practiced as it leaves the press. This can be done in one of three ways: with a water spray near the die, by immersion in a water tank adjacent to the runout table, or by passing the aluminum through a water wall. A third wastewater stream which may be associated with the extrusion process is dummy block cooling water. Following an extrusion, the dummy block drops from the press and is cooled before being used again. Air cooling is most commonly used for this purpose, but water is used at a few plants to quench the dummy blocks.

The extrusion process requires the use of a lubricant to prevent adhesion of the aluminum to the die and ingot container walls. In hot extrusion, limited amounts of lubricant are applied to the ram and die face or to the billet ends. For cold extrusion, the

container walls, billet surfaces, and die orifice must be lubricated with a thin film of viscous or solid lubricant. The lubricant most commonly used in extrusion is graphite in an oil or water base. A less common technique, spraying liquid nitrogen on the billet prior to extrusion, is also used. The nitrogen vaporizes during the extrusion process and acts as a lubricant.

The steel dies used in the extrusion process require frequent dressing and repairing to ensure the necessary dimensional precision and surface quality of the product. The aluminum that has adhered to the die orifice is typically removed by soaking the die in a caustic solution. The aluminum is dissolved and later precipitated as aluminum oxide. The caustic bath is followed by a water rinse of the dies. The rinse is frequently discharged as a wastewater stream.

In all, 163 extrusion plants were identified in this survey. Of these, 85 indicated that no wastewater is discharged from aluminum forming operations at the plant; 38 identified themselves as direct dischargers; and 40 indicated indirect discharge of the process effluent to a POTW. In subsequent investigation of extrusion practices, it became apparent that these figures may be misleading. At many of the extrusion plants contacted, personnel did not realize that die cleaning rinse water was considered to be an aluminum forming wastewater stream as defined in this study. For this reason, some of the plants classified as zero discharge are believed to be discharging this effluent stream either to surface waters or to a POTW.

The geographical location of the extrusion plants is shown in Figure III-6. Annual production of extruded products from these plants ranged between 6.8 and 68,000 kkg (7.5 and 75,000 tons) in 1977. The production distribution is summarized as follows: of the 157 extrusion operations for which 1977 production data were available, 58 percent produced less than 4,500 kkg (5,000 tons) of aluminum and aluminum alloys; 81 percent produced less than 9,000 kkg (10,000 tons); and 92 percent produced less than 18,000 kkg (20,000 tons).

Forging

Forging is a process in which aluminum is formed, usually hot, into shapes by employing compressive forces. The actual forging process is a dry operation. There are four basic methods of forging practiced in the aluminum forming category:

- Closed die forging,
- Open die forging,
- Rolled ring forging, and
- Cold impact extruding.

In each of these techniques, pressure is exerted on dies or rolls, forcing the heated stock to take the desired shape. The first three methods are shown schematically in Figure III-7.

Closed die forging, the most prevalent method, is accomplished by hammering or squeezing the aluminum between two steel dies, one fixed to the hammer or press ram and the other to the anvil. Forging hammers, mechanical presses, and hydraulic presses can be used for the closed die forging of aluminum alloys. The heated stock is placed in the lower die and, by one or more blows of the ram, forced to take the shape of the die set. In closed-die forging, aluminum is shaped entirely within the cavity created by these two dies. The die set comes together to completely enclose the forging, giving lateral restraining to the flow of the metal.

The process of open die forging is similar to that described above, but in this method, the shape of the forging is determined by manually turning the stock and regulating the blows of the hammer or strokes of the press. Open die forging requires a great deal of skill and only simple, roughly shaped forgings can be produced. Its use is usually restricted to items produced in small quantities and to development work where the cost of making closed type dies is prohibitive.

The process of rolled ring forging is used in the manufacture of seamless rings. A hollow cylindrical billet is rotated between a mandrel and pressure roll to reduce its thickness and increase its diameter.

The process of impact extruding is performed by placing a cut-off piece of aluminum in a bottom die. A top die consisting of a round or rectangular punch and fastened to the press ram is driven into the aluminum slug, causing the aluminum to be driven up around the top punch. Usually, the aluminum adheres to the punch and must be stripped off as the press ram rises.

Proper lubrication of the dies is essential in forging aluminum alloys. Collodial graphite in either a water or an oil medium is usually sprayed onto the dies for this purpose. Particulates and smoke may be generated from the partial combustion of oil-based lubricants as they contact the hot forging dies. In those cases, air pollution controls may be required. Baghouses, wet scrubbers, and commercially available dry scrubbers are in use at aluminum forming facilities.

Forging of aluminum alloys is practiced at 16 plants located as shown in Figure III-8. Of those plants, 12 discharge aluminum forming wastewater indirectly to a POTW, and the remaining four plants have no discharge of process wastewater. The production distribution is summarized as follows: of the 15 forging operations for which 1977 production data were available, 67 percent

produced less than 900 kkg (1,000 tons) of aluminum and aluminum alloys; 80 percent produced less than 4,500 kkg (5,000 tons); and 87 percent produced less than 9,000 kkg (10,000 tons).

Drawing

The term drawing, when it applies to the manufacture of tube, rod, bar, or wire, refers to the pulling of metal through a die or succession of dies to reduce its diameter, alter the cross sectional shape, or increase its hardness. In the drawing of aluminum tubing, one end of the extruded tube is swaged to form a solid point and then passed through the die. A clamp, known as a bogie, grips the swaged end of tubing, as shown in Figure III-9. A mandrel is then inserted into the die orifice, and the tubing is pulled between the mandrel and die, reducing the outside diameter and the wall thickness of the tubing. Wire, rod, and bar drawing is accomplished in a similar manner, but the aluminum is drawn through a simple die orifice without using a mandrel.

In order to ensure uniform drawing temperatures and avoid excessive wear on the dies and mandrels used, it is essential that a suitable lubricant be applied during drawing. A wide variety of lubricants are used for this purpose. Heavier draws, which have a higher reduction in diameter, may require oil-based lubricants, but oil-in-water emulsions are used for many applications. Soap solutions may also be used for some of the lighter draws. Drawing oils are usually recycled until their lubricating properties are exhausted.

Intermediate annealing is frequently required between draws in order to restore the ductility lost by cold working of the drawn product. Degreasing of the aluminum may be required to prevent burning of heavy lubricating oils in the annealing furnaces.

Of the plants surveyed, 77 are involved in the drawing of tube, wire, rod, and bar. The geographical location of these plants is shown in Figure III-10. No aluminum forming wastewater is discharged at 51 of the plants. Of the remainder, 10 discharge directly to surface water, and 16 discharge indirectly to a POTW. The production distribution is summarized as follows: of the 57 drawing operations for which 1977 production data were available, 46 percent produced less than 900 kkg (1,000 tons) of aluminum and aluminum alloys; 74 percent produced less than 4,500 kkg (5,000 tons); and 82 percent produced less than 9,000 kkg (10,000 tons).

Sawing. Sawing may be required for a number of aluminum forming processes. Before ingots can be used as stock for rolling or extrusion, the ingot may require scalping or sawing to a suitable length. Following processes such as rolling, extrusion, and drawing, the aluminum products may be sawed. The circular saws

and band saws used generally require a cutting lubricant in order to minimize friction and act as a coolant. Oil-in-water emulsions or mineral-based oils are usually applied to the sides of the blade as a spray. In some cases, a heavy grease or wax may be used as a saw lubricant. Normally, saw oils are not discharged as a wastewater stream. The lubricants frequently are carried over on the product or removed together with the saw chips for reprocessing. In some cases; however, recycle and discharge of a low-volume saw lubricant stream is practiced.

Swaging. Swaging is a forming operation frequently associated with drawing. Swaging is often the initial step in drawing tube or wire. By repeated blows of one or more pairs of opposing dies, a solid point is formed. The point is then inserted through the drawing die and gripped. In a few cases, swaging is used in tube forming without a subsequent drawing operation. Some lubricants, such as waxes and kerosene, may be used to prevent adhesion of the metal or oxide on the swaging dies.

ANCILLARY OPERATIONS

Casting

Before aluminum alloys can be used for rolling or extrusion, and subsequently for other aluminum forming operations, they are usually cast into ingots of suitable size and shape. Although ingots may be prepared at smelters or other forming plants, 85 of the 277 plants surveyed indicated that casting is done on site. In addition, 30 of the 31 primary aluminum plants surveyed in the nonferrous metals study indicated that some form of casting is done on site. Nine of these plants fall into both the aluminum forming and nonferrous metals categories. Therefore, 106 primary reduction and aluminum forming plants have casting operations on site.

The equipment and methods of casting used at aluminum forming plants are the same as those employed by primary plants plus the water requirements and waste characteristics are also very similar. Casting done at a plant which does both primary aluminum reduction and aluminum forming will be subject to the casting limitations for primary aluminum if they cast the aluminum directly without cooling. If the aluminum is a remelted primary aluminum product then the casting subsequent to the remelting will be subject to the aluminum forming limitations.

The aluminum alloys used as the raw materials for casting operations are sometimes purchased from nearby smelters and transported to the forming plants in the molten state. Usually, however, purchased aluminum ingots are charged together with alloying elements into melting furnaces at the casting plants.

Several types of furnaces can be used, but reverberatory furnaces are the most common. The melting temperatures used range from 650 to 750°C.

At many plants, fluxes are added to the metal in order to reduce hydrogen contamination, remove oxides, and eliminate undesirable trace elements. Solid fluxes, such as hexachloroethane, aluminum chloride, and anhydrous magnesium chloride, may be used, but it is more common to bubble gases such as chlorine, nitrogen, argon, helium, and mixtures of chlorine and inert gases through the molten metal. Fluxing is accomplished by inserting a long, perforated "lance" into the molten liquid and pumping the gas through it. This forces the oxides of aluminum back up to the surface. The oxides form on top of the metal while it stands in the crucibles and after it is poured into the furnace, and--being heavier than pure aluminum--sink down into the molten metal. Bubbles in the fluxing material surround the aluminum oxide and carry it up to the surface, where it can be skimmed off with big, long-handled rakes.

After alloying and fluxing, the metal is allowed to flow into a second or "holding" compartment of the furnace, which acts as a reservoir. When the reservoir of molten metal is sufficiently full the metal may be drawn off to be cast.

Certain complex reactions occur in the furnace itself and, as a result, some hydrogen gas is trapped in the molten metal. So, just before it moves from the charging furnace to the holding furnaces, the metal is "degassed" by introducing a combination of nitrogen and chlorine gas, or chlorine gas alone, or other chemicals. Although similar to fluxing in its description, degassing has an entirely different purpose but both may occur in the same operation.

The fluxing and degassing operations are not the same as the demagging process used in the manufacture of secondary aluminum. Like degassing and fluxing, demagging involves bubbling of chlorine gas through molten aluminum, however the constituent to be removed through demagging is primarily magnesium. Thus, the demagging process is a refining process which frequently requires significantly more chlorine than degassing or fluxing and some type of wet air pollution control.

One of the problems associated with furnace degassing with chlorine is the need for air pollution control. If the alloy being treated does not contain magnesium, the chlorine gas will react to form aluminum chloride, which exists as a dense, white smoke. The presence of hydrochloric acid in these vapors necessitates the use of wet scrubbers. For this reason, other gases or mixtures of gases may be preferred as degassing agents. In addition, a number of in-line treatment methods that eliminate

the need for fluxing when degassing aluminum have recently been developed and are being adopted by the industry. For a more detailed description of these alternatives, see Section VII. One of the aluminum forming plants and four primary aluminum plants with casting operations reported using wet air pollution controls to treat fumes from their melting furnaces. Chlorine was occasionally cited as a degassing agent.

The casting methods used in aluminum forming can be divided into three classes:

- Direct chill casting,
- Continuous casting, and
- Stationary casting.

The process variations among these techniques affect both the metallic properties of the aluminum that is cast and the characteristics of associated wastewater streams.

Direct Chill Casting. Direct chill casting is performed at 61 aluminum forming plants and is the most widely used method of casting aluminum for subsequent forming. Direct chill casting is characterized by continuous solidification of the metal while it is being poured. The length of an ingot cast using this method is determined by the vertical distance it is allowed to drop rather than by mold dimensions.

As shown in Figure III-11, molten aluminum is tapped from the melting furnace and flows through a distributor channel into a shallow mold. Noncontact cooling water circulates within this mold, causing solidification of the aluminum. The base of the mold is attached to a hydraulic cylinder which is gradually lowered as pouring continues. As the solidified aluminum leaves the mold, it is sprayed with contact cooling water to reduce the temperature of the forming ingot. The cylinder continues to descend into a tank of water, causing further cooling of the ingot as it is immersed. When the cylinder has reached its lowest position, pouring stops and the ingot is lifted from the pit. The hydraulic cylinder is then raised and positioned for another casting cycle.

In direct chill casting, lubrication of the mold is required to ensure proper ingot quality. Lard or castor oil is usually applied before casting begins and may be reapplied during the drop. Much of the lubricant volatilizes on contact with the molten aluminum, but contamination of the contact cooling water with oil and oil residues does occur.

The production distribution is summarized as follows: of the 56 direct chill casting operations for which 1977 production data were available, 52 percent produced less than 23,000 kkg (25,000

tons) of aluminum and aluminum alloys; 73 percent produced less than 45,000 kkg (50,000 tons); and 89 percent produced less than 180,000 kkg (200,000 tons). Direct chill casting is also performed by 27 primary aluminum plants covered in the nonferrous metals survey. A comparison of production information was made using production capacity from the two data sets, since the primary aluminum data was not from 1977. Of the 18 reduction plants supplying production capacity data, 28 percent produce less than 90,000 kkg (100,000 tons); 78 percent produce less than 180,000 kkg (200,000 tons); and 94 percent produce less than 227,000 kkg (250,000 tons).

Continuous Casting. Of the aluminum forming category plants surveyed, 15 use continuous casting instead of, or in addition to, direct chill casting methods. Unlike direct chill casting, no restrictions are placed on the length of the casting, and it is not necessary to interrupt production to remove the cast product. The use of continuous casting eliminates or reduces the degree of subsequent rolling required.

A relatively new technology, continuous casting of aluminum first came into practice in the late 1950's. Since then, improvements and modifications have resulted in the increased use of this process. Current applications include the casting of plate, sheet, foil, and rod. Because continuous casting affects the mechanical properties of the aluminum cast, the use of continuous casting is limited by the alloys used, the nature of subsequent forming operations, and the desired properties of the finished product. In applications where continuous casting can be used, the following advantages have been cited:

- Increased flexibility in the dimensions of the cast product;

- Low capital costs, as little as 10 to 15 percent of the cost of conventional direct chill casting and hot rolling methods; and

- Low energy requirements, reducing the amount of energy required to produce comparable products by direct chill casting and rolling methods by 35 to 80 percent, depending on the product being cast.

In addition, the use of continuous casting techniques has been found to significantly reduce or eliminate the use of contact cooling water and oil lubricants.

A number of different continuous casting processes are currently being used in the industry. Although the methods vary somewhat, they are similar in principle to one of the three processes diagrammed schematically in Figure III-12. The most common method

of continuous sheet casting, shown in Figure III-12A, substitutes a single casting process for the conventional direct chill casting, scalping, heating, and hot rolling sequence. The typical continuous sheet casting line consists of melting and holding furnaces, a caster, pinch roll, shear, bridle, and coiler. Molten aluminum flows from the holding furnace through a degassing chamber or filter to the caster headbox. The level of molten aluminum maintained in the headbox causes the metal to flow upwards through the top assembly, which distributes it uniformly across the width of the casting rolls. The aluminum solidifies as it leaves the tip and is further cooled and solidified as it passes through the internally water-cooled rolls. It leaves the caster as a formed sheet and successively passes through pinch rolls, a shear, and a tension bridle before being wound into a coil. The cooling water associated with this method of continuous sheet casting never comes into contact with the aluminum metal.

Another method of casting continuous aluminum sheet is shown in Figure III-12B. This process is not very common and is limited due to the mechanical properties of the sheet produced. Molten aluminum is poured into a rotating perforated cylinder. The droplets formed are air cooled and solidify as they fall. At this point, the pellets may either be removed for temporary storage or charged directly to a preheated chamber, hot rolled into sheet, and coiled. This unique process design not only eliminates the use of contact cooling water, but also results in considerable reductions in the amount of noncontact cooling water required in the production of sheet.

Several methods of wheel casting, similar to the one shown in Figure III-12C, are currently being used to produce aluminum rod. Typically, continuous rod is manufactured on an integrated casting and rolling line consisting of a wheel belt caster, pinch roll, shear, rolling trains, and a coiler. A ring mold is set into the edge of the casting wheel. The mold is bound peripherally by a continuous belt which loops around the casting wheel and an associated idler wheel. As the casting wheel rotates, aluminum is poured into the mold and solidifies. After a rotation of approximately 180°, the belt separates from the mold, releasing the still pliable aluminum bar. The bar then enters directly into an in-line rolling mill, where it is rolled into rod and coiled. Noncontact cooling water circulating within the casting wheel is used to control the temperature of the ring mold. Cooling of the belt is, for the most part, also accomplished by noncontact water, though some plants indicated that contact with the aluminum bar as it leaves the mold is difficult to avoid. Some models are actually designed so that cooling water circulates within the interior of the wheel and then flows over the freshly cast bar and onto the belt as the belt separates from the ring mold. Because continuous casting incorporates

casting and rolling into a single process, rolling lubricants may be required. Frequently, oil emulsions similar to those used in conventional hot rolling are used for this purpose. Graphite solutions may be suitable for roll lubrication of some continuous casting processes. In other instances, aqueous solutions of magnesia are used.

The production distribution is summarized as follows: of the 14 continuous casting operations for which 1977 production data were available, 57 percent produced less than 18,000 kkg (20,000 tons) of aluminum and aluminum alloys; 71 percent produced less than 27,000 kkg (30,000 tons); and 100 percent produced less than 36,000 kkg (40,000 tons). Five plants in the primary aluminum industry have continuous casting. Production was compared using the production capacity rather than actual production since 1977 production was not available. Of the four plants supplying production capacity data, one plant has a capacity less than 22,700 kkg (25,000 tons); two plants have a capacity of 45,000 kkg (50,000 tons) or less; and no plant has a capacity above 68,000 kkg (75,000 tons).

Stationary Casting. Stationary casting of aluminum ingots is practiced at 16 aluminum plants, usually to recycle in-house aluminum scrap. The production distribution is summarized as follows: of the 10 stationary casting operations for which 1977 production data were available, 50 percent produced less than 1,800 kkg (2,000 tons) of aluminum and aluminum alloys; 70 percent produced less than 4,500 kkg (5,000 tons); and 90 percent produced less than 9,000 kkg (10,000 tons). In the stationary casting method, molten aluminum is poured into cast iron molds and allowed to air cool. Lubricants and cooling water are not required. Melting and casting procedures are dictated by the intended use of the ingots produced. Frequently, the ingots are used as raw material for subsequent aluminum forming operations at the plant. Other plants sell these ingots for reprocessing.

Heat Treatment

Heat treatment is an integral part of aluminum forming practiced at nearly every plant in the category. It is frequently used both in process and as a final step in forming to give the aluminum alloy the desired mechanical properties. The general types of heat treatment applied are the following:

- Homogenizing, to increase the workability and help control recrystallization and grain growth following casting;

- Annealing, to soften work-hardened and heat-treated alloys, relieve stress, and stabilize properties and dimensions;

- Solution heat treatment, to improve mechanical properties by maximizing the concentration of hardening constituents in solid solution; and

- Artificial aging, to provide hardening by precipitation of constituents from solid solution.

Homogenizing, annealing, and aging are dry processes, while solution heat treatment typically involves significant quantities of contact cooling water.

In the casting process, large crystals of intermetallic compounds are distributed heterogeneously throughout the ingot. Homogenization of the cast ingot provides a more uniform distribution of the soluble constituents within the alloy. By reducing the brittleness caused by casting, homogenization prepares the ingot for subsequent forming operations. The need for homogenization and the time and temperatures required are dependent on the alloy involved, the ingot size, the method of casting used, and the nature of the subsequent forming operations. Typically, the ingot is heated to a temperature ranging between 425 and 650°C and held at that temperature for four to 48 hours. The ingots are then allowed to air cool. One plant does use a water mist to aid final cooling after homogenizing.

Annealing is used by plants in the aluminum forming category to remove the effects of strain hardening or solution heat treatment. The alloy is raised to its recrystallization temperature, typically between 350 and 400°C. Nonheat-treatable, strain-hardened alloys need only be held in the furnace until the annealing temperature is reached; heat-treatable alloys usually require a detention time of two or three hours. In continuous furnaces, the metal is raised to higher temperatures (i.e., 425 to 450°C) and detained in the furnace for 30 to 60 seconds. Once removed from the annealing furnace, it is essential that the heat-treatable alloys be cooled to 250°C or lower at a slow, controlled rate. After annealing, the aluminum is in a ductile, more workable condition suitable for subsequent forming operations. One plant reported that a water seal was used on its annealing furnace to maintain the inert atmosphere in the annealing furnace. Water circulates through a fibrous material which provides the seal between the furnace door and the frame. The purpose of the water is to prevent scorching of the seal material. Some of the water does pass through the fibrous material and contacts the metal; however, this water evaporates on contact. After discussions with the plant and the furnace vendor, it was concluded that the furnace seal water is a non-contact cooling water stream.

Solution heat treatment is accomplished by raising the temperature of a heat-treatable alloy to the eutectic temperature, where

it is held for the required length of time and quenched rapidly. As a result of this process, the metallic constituents in the alloy are held in a super-saturated solid solution, improving its mechanical properties. The metal temperatures recommended for solution heat treatment of formed aluminum alloys typically range from 450 to 550°C. The required length of time the metal must be held at this temperature varies from one to 48 hours. In the case of extrusion, certain aluminum alloys can be solution heat treated immediately following the extrusion process. In this procedure, known as press heat treatment, the metal is extruded at the required temperatures and quenched with contact cooling water as it emerges from the die or press.

The quenching techniques used in solution heat treatment are frequently critical in achieving the desired mechanical properties. The sensitivity of alloys to quenching varies, but delays in transferring the product from the furnace to the quench, a quenching rate that is incorrect or not uniform, and the quality of the quenching medium used can all have serious detrimental effects. With few exceptions, contact cooling water is used to quench solution heat treated products. Immersion quenching in contact cooling water, typically ranging from 65 to 100°C, is used for most aluminum formed products. Forgings can be quenched at cooler temperatures (i.e., 60 to 70°C). Spray or flush quenching is sometimes used to quench thick products. Solution heat treated forgings of certain alloys can be quenched using an air blast rather than a water medium. Air quenching can also be used for certain extrusions following press heat treatment. Immersion quenching using glycol is often found in the manufacture of high-performance aeronautical components. This unusual operation is critical for achieving desired mechanical properties, and its use may increase as the demand for high-quality parts goes up.

Artificial aging, also known as precipitation heat treatment, is applied to some aluminum alloys in order to cause precipitation of super-saturated constituents in the metal. The alloy is heated to a relatively low temperature (i.e., 120 to 200°C) for several hours and then air cooled. Artificial aging is frequently used following solution heat treatment to develop the maximum hardness and ultimate tensile and yield strength in the metal. For certain alloys, the mechanical properties are maximized by sequentially applying solution heat treatment, cold working, and artificial aging.

At elevated temperatures, the presence of water vapors can disrupt the oxide film on the surface of the product, especially if the atmosphere is also contaminated with ammonia or sulfur compounds. Possible detrimental effects include surface blistering, porosity, discoloration, and a decrease in tensile properties. When this occurs, it is necessary to control the atmosphere

within a heat treatment furnace. A number of techniques can be used to control the atmosphere. At some aluminum forming plants, natural gas is burned to generate an inert atmosphere. The resulting flue gases are cooled to remove moisture and are introduced to the heat treatment furnace. Under the proper conditions, the same fuel that heats the furnace can be used for this purpose. Because of the high sulfur content in most furnace fuels; however, the off-gases require treatment by wet scrubbers before they can be used as inert atmosphere for heat treatment.

Cleaning and Etching

A number of chemical or electrochemical treatments may be applied after the forming of aluminum or aluminum alloy products. Solvent, acid and alkaline solutions, and detergents can be used to clean soils such as oil and grease from the aluminum surface. Acid and alkaline solutions can also be used to etch the product or brighten its surface. Deoxidizing and desmutting are accomplished with acid solutions. Surface treatments and their associated rinses are usually combined in a single line of successive tanks. Wastewater discharge from these lines is typically commingled prior to treatment or discharge. In some cases, rinse water from one treatment is reused in the rinse of another. These treatments may be used for cleaning purposes or to provide the desired finish for an aluminum formed product, or they may simply prepare the aluminum surface for subsequent coating by such processes as anodizing, conversion coating, electroplating, painting, and porcelain enameling. A number of different terms are commonly used in referring to sequences of surface treatments (e.g., pickling lines, cleaning lines, etch lines, preparation lines, and pretreatment lines). The terminology depends, to some degree, on the purpose of the lines, but usage varies within the industry. In addition, the characteristics of wastewater generated by surface treatment is determined by the unit components of the treatment lines rather than the specific purpose of its application. In order to simplify discussion, the term cleaning or etching is used in this document to refer to any surface treatment processes other than solvent cleaning.

Surface treatment operations performed as an integral part of the forming process are considered to be within the scope of the aluminum forming category. In other words, those surface treatment operations that immediately follow an aluminum forming operation or precede further forming or working of the aluminum are considered a part of aluminum forming.

In situations where surface treatment operations are an integral part of coil coating lines or are not an integral part of the forming process, (i.e., performed at another site) the wastewaters will not be considered as aluminum forming wastewaters.

Solvent Cleaning. Solvent cleaners are used to remove oil and grease compounds from the surface of aluminum products. This process is usually used to remove cold rolling and drawing lubricants before products are annealed, finished, or shipped. There are three basic methods of solvent cleaning: vapor degreasing, cold cleaning, and emulsified solvent degreasing.

Vapor degreasing, the predominant method of solvent cleaning in the aluminum forming industry, uses the hot vapors of chlorinated solvents to remove oils, greases, and waxes. In simplest form, vapor degreasing units consist of an open steel tank similar to the one shown in Figure III-13A. Solvent is heated at the bottom of a steel tank and, as it boils, a hot solvent vapor is generated. Because of its higher density, the vapor displaces air and fills the tank. Near the top of the tank, condenser coils provide a cooling zone in which the vapors condense and are prevented from rising above a fixed level. When cool aluminum forming products are lowered into the hot vapor, the solvent condenses onto the product, dissolving oils present on the surface. Vapor degreasing units may also incorporate immersion or spraying of the hot solvent for more effective cleaning. Conveyor systems similar to the one shown in Figure III-13B are used in some applications.

The solvents most commonly used for vapor degreasing in aluminum forming are trichloroethylene, 1,1,1-trichloroethane, and perchloroethylene. Selection of the solvent depends on a number of factors, including solvent boiling point, product dimension, and alloy makeup; and the nature of the oil, grease, or wax to be removed. Stabilizing agents are usually added to the solvents.

Vapor degreasing solvents are frequently recovered by distillation. Solvents can be distilled either within the degreasing unit itself or in a solvent recovery still. The sludge residue generated in the recovery process is toxic and may be flammable. Suitable handling and disposal procedures must be followed and are discussed in subsequent sections of this report (principally in Section VII).

Cold cleaning is another solvent cleaning method and involves hand wiping, spraying, or immersion of metal parts in organic solvents to remove oil, grease, and other contaminants from the surface. A variety of solvents or solvent blends, primarily petroleums and chlorinated hydrocarbons, are used in cold cleaning. These solvents can be reclaimed by distillation either on site or by an outside recovery service. For highly contaminated solvents; however, reclamation may not be cost effective, and contract hauling is the disposal method of choice. In general, cold cleaning is not as effective as vapor degreasing treatment, but the costs are considerably lower.

Emulsified solvents can also be used to clean aluminum, but they are less efficient than pure solvents, and their use is limited to the removal of light oil and grease. Reclamation of emulsified solvents is not economically feasible at this time. Contract hauling of the spent solvents is the disposal method practiced by plants in the aluminum forming category.

Due to the toxic nature of many cleaning solvents, emission controls may be required.

Alkaline and Acid Cleaning. Alkaline cleaning is the most common method of cleaning aluminum surfaces. The alkaline solutions vary in pH and chemical composition. Inhibitors are frequently added to minimize or prevent attack on the metal. Alkaline cleaners are able to emulsify vegetable and animal oils and greases to a certain degree and are effective in the removal of lard, oil, and other such compounds. Mineral oils and grease, on the other hand, are not emulsified by alkaline cleaning solutions and, therefore, are not removed as effectively.

Aluminum products can be cleaned with an alkaline solution either by immersion or spray. The solution is usually maintained at a temperature ranging between 60 and 80°C. Rinsing, usually with warm water, should follow the alkaline cleaning process to prevent the solution from drying on the product.

Acid solutions can also be used for aluminum cleaning, but they are less effective than either alkaline or solvent cleaning systems. Their use is generally limited to the removal of oxides and smut. Acid cleaning solutions usually have a pH ranging from 4.0 to 5.7 and temperatures between room temperature and 80°C. The solutions typically contain one or two acids (e.g., nitric, sulfuric, phosphoric, chromic, and hydrofluoric acids).

Chemical and Electrochemical Brightening. The surface of aluminum or aluminum alloys can be chemically or electrochemically brightened to improve surface smoothness and reflectance. Chemical brightening is accomplished by immersing the product in baths of concentrated or dilute acid solutions. The acids most commonly used for this purpose are sulfuric; nitric; phosphoric; acetic; and, to a lesser extent, chromic and hydrofluoric. Other constituents, such as copper or lead salts, glycerol, and ethylene glycol, may be added as well.

Aluminum can also be brightened by electrochemical methods. The product is immersed in an electrolyte bath, through which direct current is passed. The electrolytic solutions are acidic, containing hydrofluoric, phosphoric, chromic, or sulfuric acid, or they may be alkaline, containing sodium carbonate or trisodium phosphate.

Etching. Chemical etchants are used to reduce or eliminate scratches and other surface imperfections, to remove oxides, or to provide surface roughness. The most widely used etchant is an aqueous solution of sodium hydroxide. The concentration and temperature of the caustic bath are carefully controlled to provide the desired degree of etching. In general, the sodium hydroxide concentration ranges from 1 to 15 percent, and the solution is maintained between 50 and 80°C. It is important that products are rinsed immediately following caustic etching.

As a result of etching with a caustic solution, the surface of the product may be discolored. Alloying constituents, such as copper, manganese, and silicon, as well as other impurities in the metal, are not dissolved in the etchant and form a dark residual film referred to as smut. In order to alleviate this problem, caustic etching is frequently followed by desmutting.

For specific aluminum alloys or desired finishes, acid etching may be used. Aluminum-silicon alloys are frequently etched in a solution containing nitric and hydrofluoric acids. Fumes generated by acid etching are corrosive and may constitute a health hazard requiring suitable air pollution control. In general, etching with acids is more expensive, but it may result in less aluminum loss, which can be an economic advantage.

Desmutting and Deoxidizing. Acid solutions are used in desmutting and deoxidizing aluminum products. Desmutting, a process frequently applied following caustic etching, is accomplished by immersion in an acid solution that dissolves the residual film. Although a number of acid solutions can be used to remove smut, dilute nitric acid is most commonly employed.

Deoxidizers are acid solutions formulated to remove specific oxide films and coatings from the aluminum products. The oxides may have been formed naturally, or they may result from heat treatment or other surface treatments. Deoxidizing solutions can be composed of a variety of acids, including chromic, phosphoric, sulfuric, nitric, and hydrofluoric acid.

Anodizing. Anodizing is either a chemical or an electrolytic oxidation process which converts the surface of the metal to an insoluble oxide. These oxide coatings provide corrosion protection, decorative surfaces, a base for painting and other coating processes, as well as special electrical and mechanical properties.

The majority of anodizing is carried out by immersion of racked parts in tanks. Continuous anodizing may be done on large coils of aluminum in a manner similar to continuous electroplating. The formation of the oxide occurs (in electrolytic anodizing) when the parts are made anodic in dilute sulfuric acid or dilute

chromic acid solutions. The oxide layer begins formation at the extreme outer surface, and as the reaction proceeds, the oxide grows into the metal. The last formed oxide, known as the boundary layer, is located at the interface between the aluminum and the oxide. The boundary is extremely thin and nonporous. The sulfuric acid process is typically used for all parts subject to stress or containing recesses in which the sulfuric acid solution may be retained and attack the aluminum. Chromic acid anodic coatings are more protective than sulfuric acid coatings and have a relatively thick boundary layer. For these reasons, a chromic acid bath is used if a complete rinsing of the part cannot be achieved.

Chemical Conversion Coating. This manufacturing operation includes chromating, phosphating, and passivating. These coatings are applied to previously deposited metal or basis material for increased corrosion protection, lubricity, preparation of the surface for additional coatings, or formulation of a special surface appearance. In chromating, a portion of the aluminum is converted to one of the components of the protective film formed by the coating solution. This occurs by reaction with aqueous solutions containing hexavalent chromium and active organic or inorganic compounds. Most of the coatings are applied by chemical immersion, although a spray or brush treatment can be used.

Phosphate coatings are used to provide a good base for paints and other organic coatings, to condition the surfaces for cold forming operations by providing a base for drawing compounds and lubricants, and to impart corrosion resistance to the aluminum surface by the coating itself or by providing a suitable base for rust-preventive oils or waxes. Phosphate conversion coatings are formed by the immersion of aluminum in a dilute solution of phosphoric acid. The method of applying the phosphate coating is dependent upon the size and shape of the part to be coated. Small parts frequently are coated in barrels immersed in the phosphating solution. Large parts may be spray coated or continuously passed through the phosphating solution.

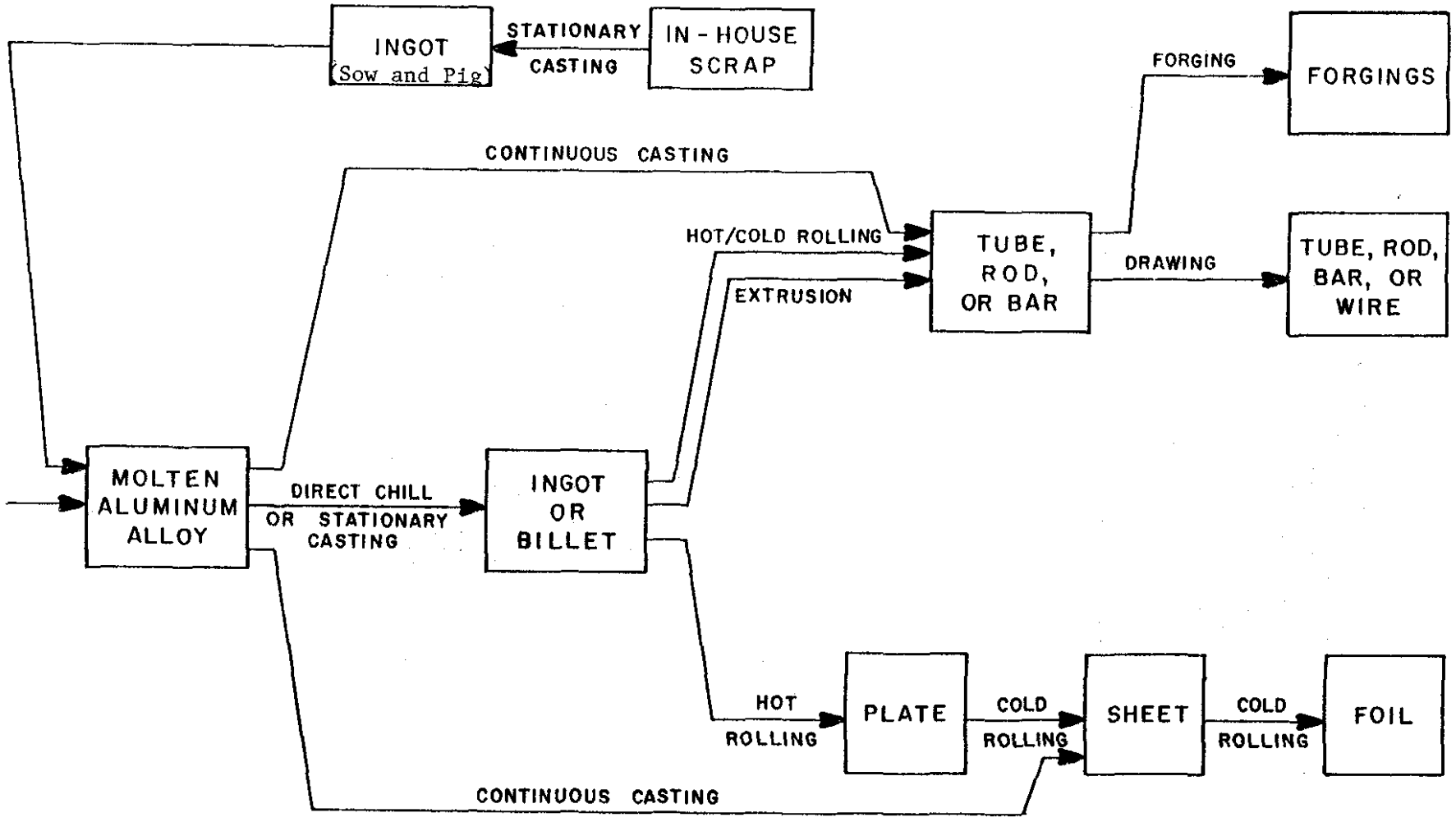

Figure III-1

ALUMINUM FORMING PRODUCTS

Table III-1

PROFILE OF ALUMINUM FORMING PLANTS

Aluminum Product	Number of Plants	PRODUCTION (tons/yr) Industry Total	PRODUCTION (tons/yr) Plant Average	EMPLOYMENT Plant Average
Plate	7	6.00×10^4	8.57×10^3	852
Sheet	16	8.34×10^5	5.56×10^4	693
Strip	21	7.28×10^5	3.639×10^4	356
Foil	15	2.091×10^5	1.394×10^4	294
Tube	25	7.08×10^4	3,078	176
Rod	13	4.747×10^4	4,747	125
Wire & Cable	48	1.988×10^5	4,229	43
Extrusions	141	9.07×10^5	6.48×10^3	100
Forgings	13	1.856×10^4	1,547	94

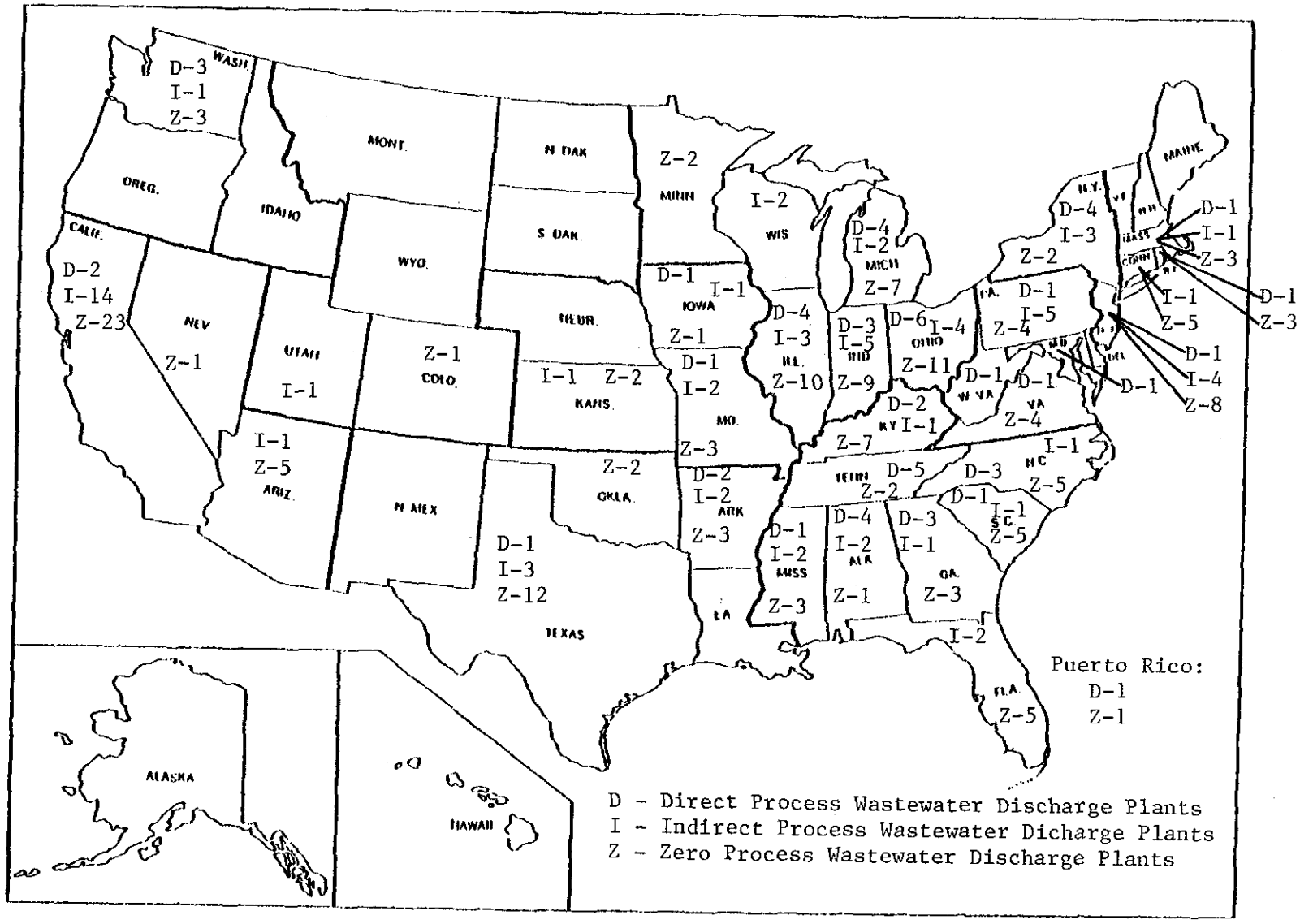

Figure III-2

GEOGRAPHICAL DISTRIBUTION OF ALUMINUM FORMING PLANTS

Table III-2

PLANT AGE DISTRIBUTION BY DISCHARGE TYPE

Type of Plant Discharge	No Data	Plant Age As of 1977 (Years) 0-5	6-10	11-20	21-30	31-40	41-50	51-60	61-75	75+*	Total
Direct	0	1	7	18	18	11	0	1	1	1	58
Indirect	0	10	5	17	15	7	2	3	4	3	66
Zero	3	17	24	52	32	9	6	3	2	5	153
Total	3	28	36	87	65	27	8	7	7	9	277

*These plants may have installed aluminum forming operations after their initial construction.

Table III-3

DISTRIBUTION OF FACILITIES ACCORDING TO TIME ELAPSED SINCE LATEST MAJOR PLANT MODIFICATION

Type of Plant Discharge	No Data	Years Elapsed Since Latest Major Modification (As of 1977)					
		0-5	6-10	11-15	16-20	21+	Total
Direct	8	31	12	5	1	1	58
Indirect	13	34	10	3	3	3	66
Zero	38	69	26	4	9	7	153
Total	59	134	48	12	13	11	277

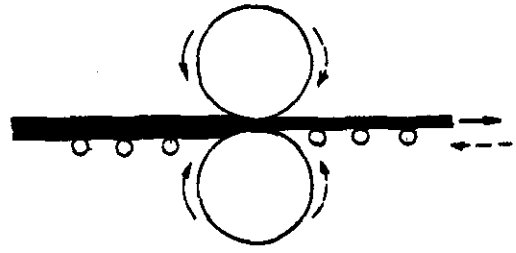

A. TWO - HIGH REVERSING MILL

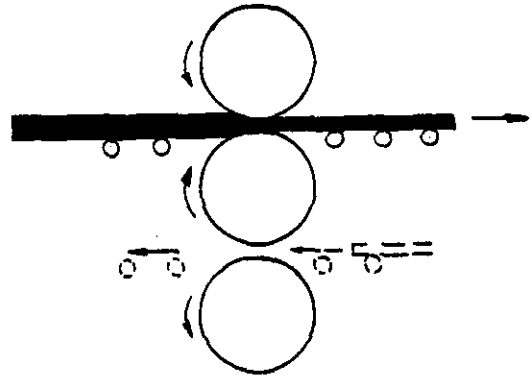

B. THREE - HIGH CONTINUOUS ROLLING MILL

Figure III-3

COMMON ROLLING MILL CONFIGURATIONS

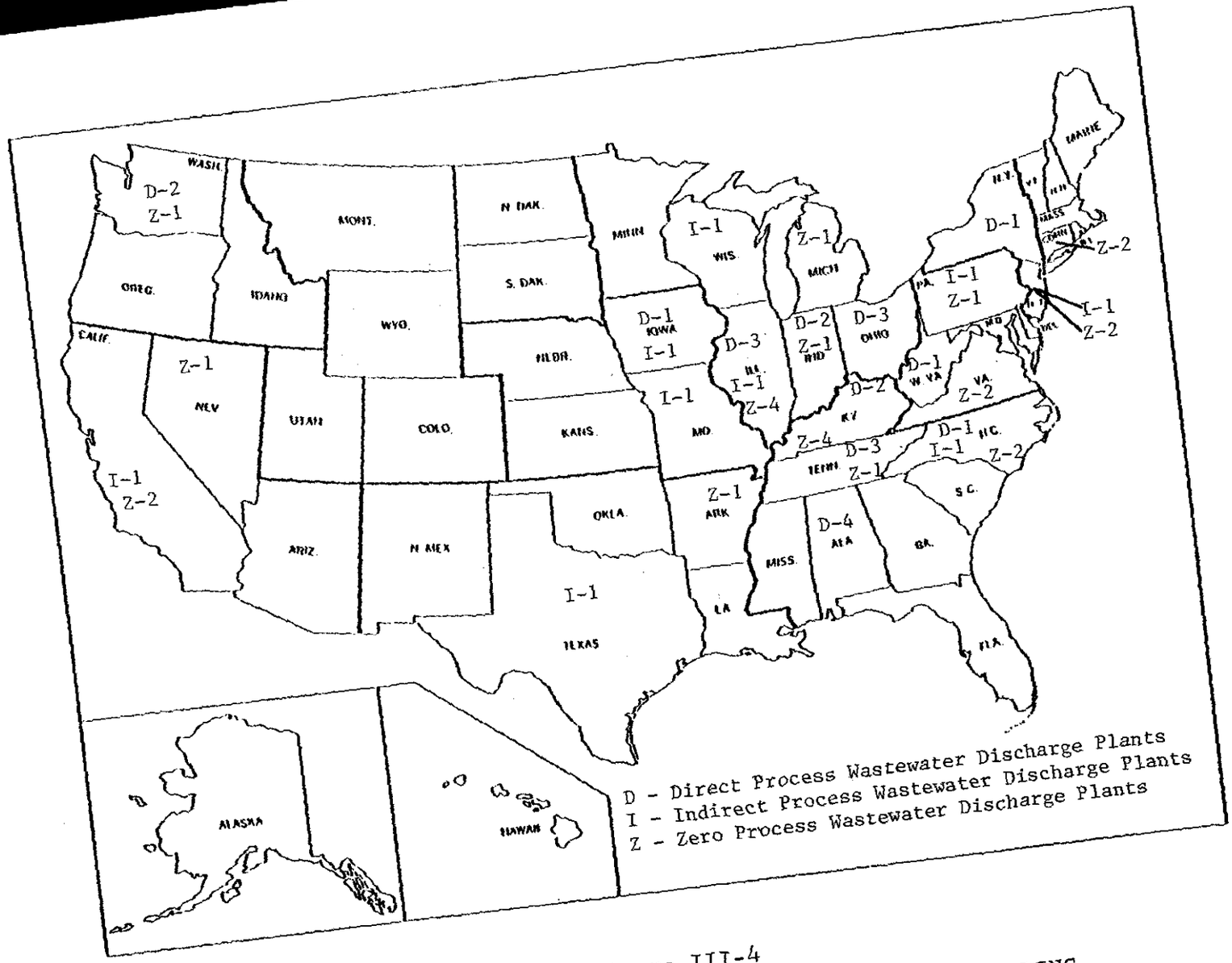

Figure III-4

GEOGRAPHICAL DISTRIBUTION OF PLANTS WITH HOT/COLD ROLLING

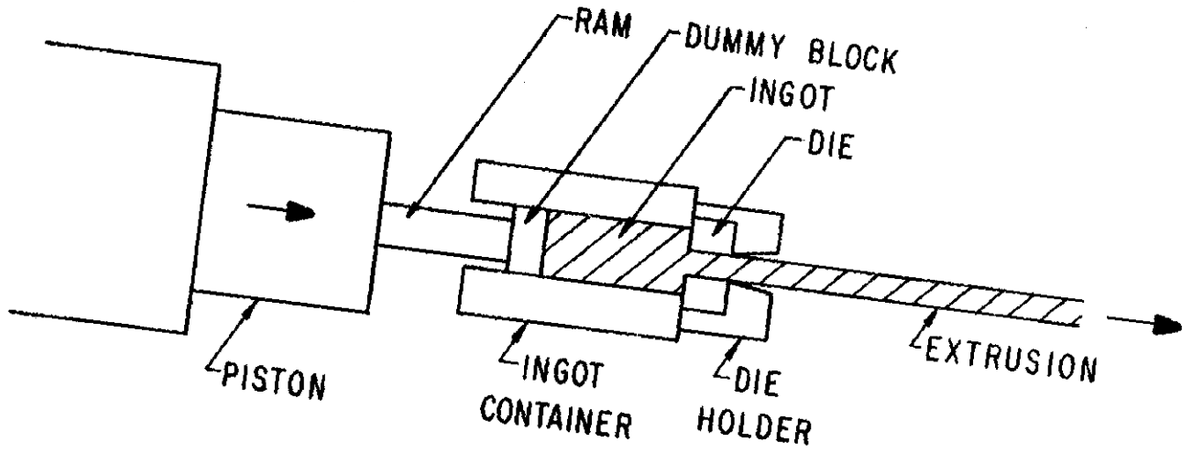

Figure III-5

DIRECT EXTRUSION

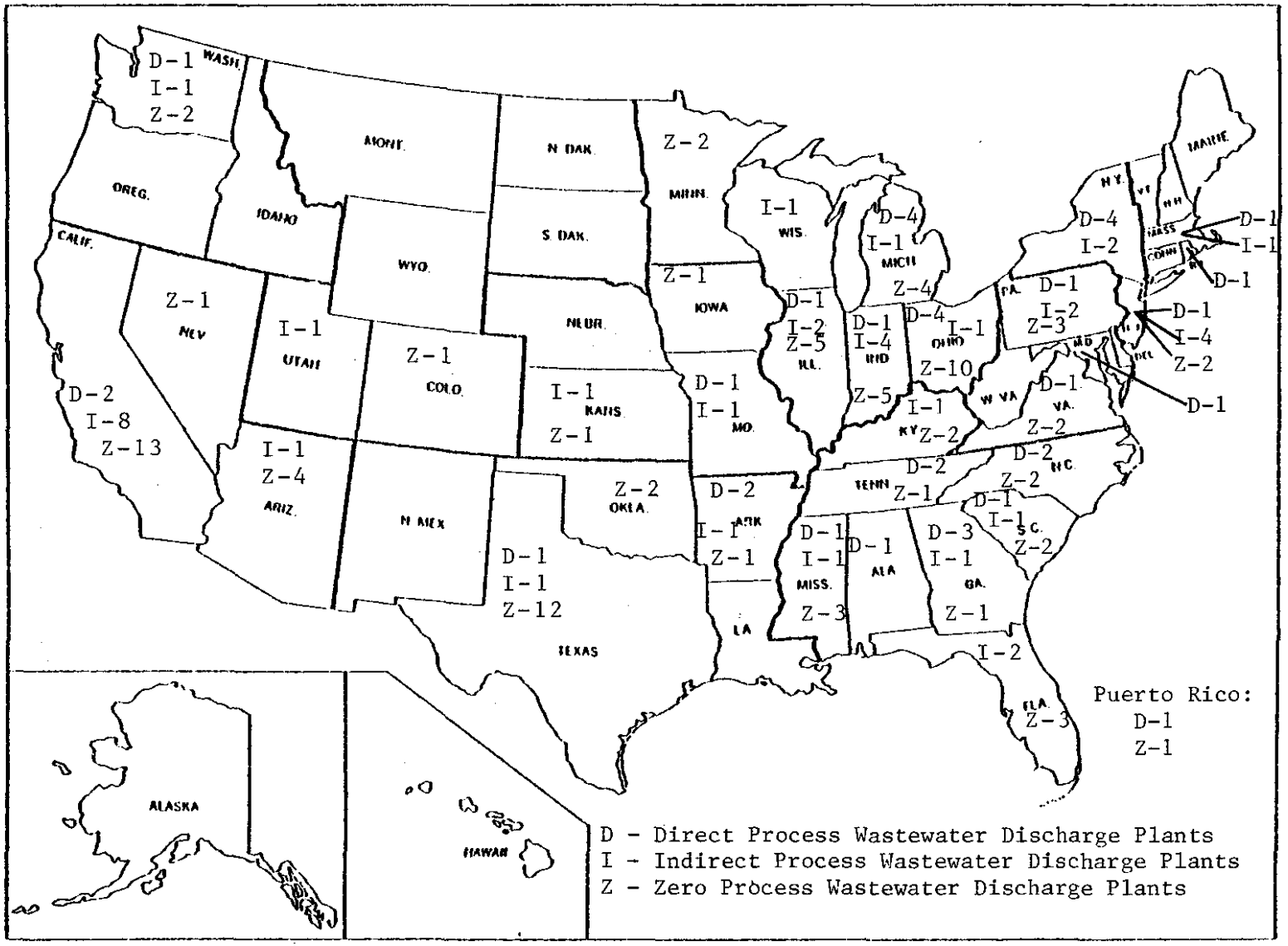

Figure III-6

GEOGRAPHICAL DISTRIBUTION OF PLANTS WITH EXTRUSION

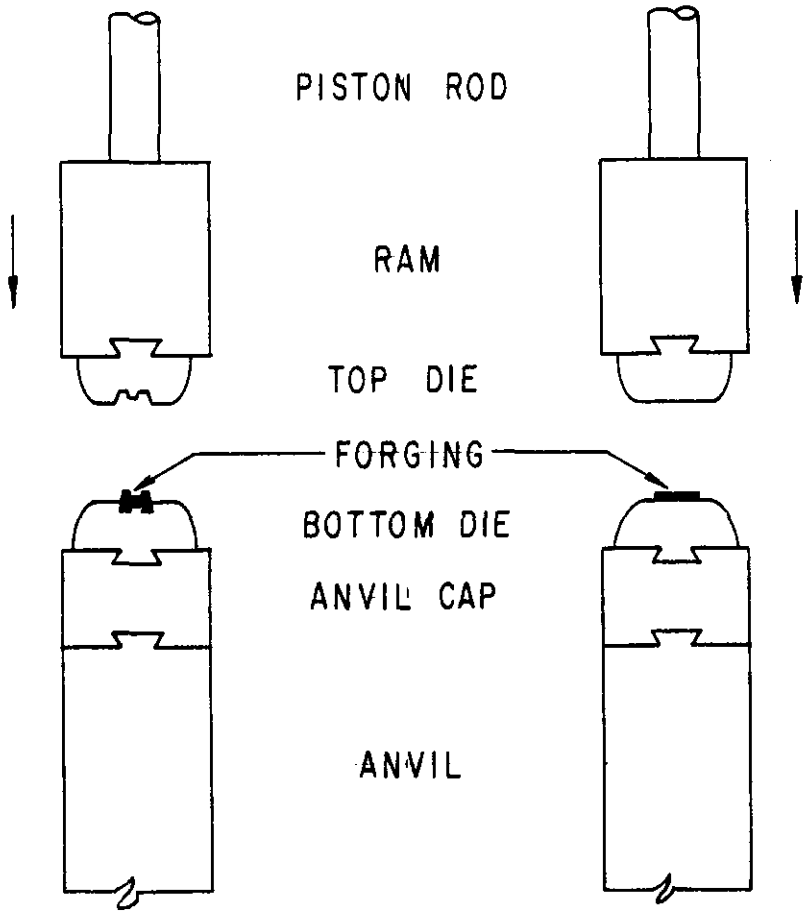

A. CLOSED DIE FORGING

B. OPEN DIE FORGING

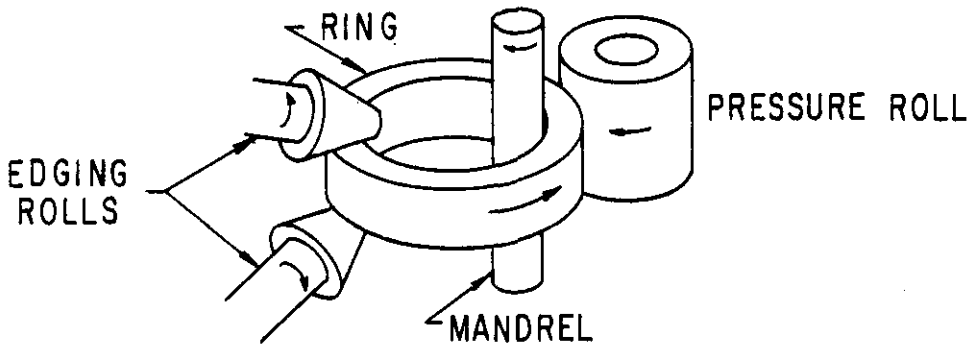

C. ROLLED RING FORGING

Figure III-7

FORGING

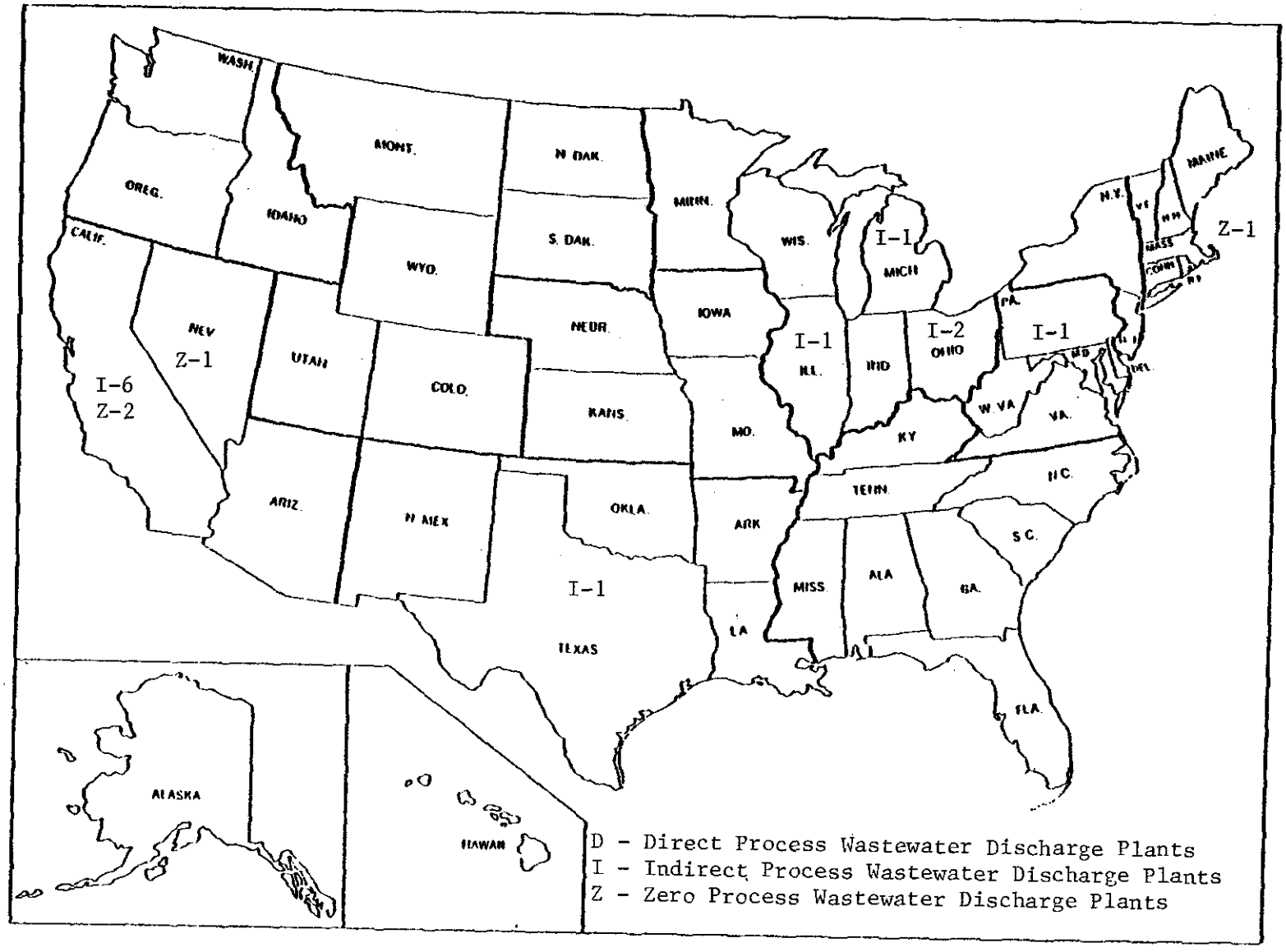

Figure III-8

GEOGRAPHICAL DISTRIBUTION OF PLANTS WITH FORGING

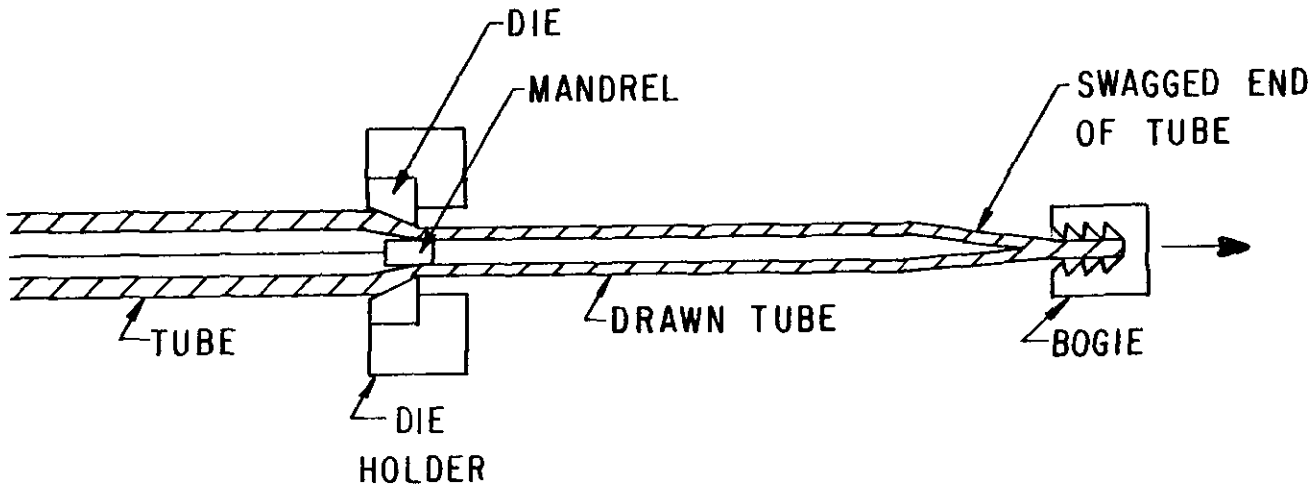

Figure III-9

TUBE DRAWING

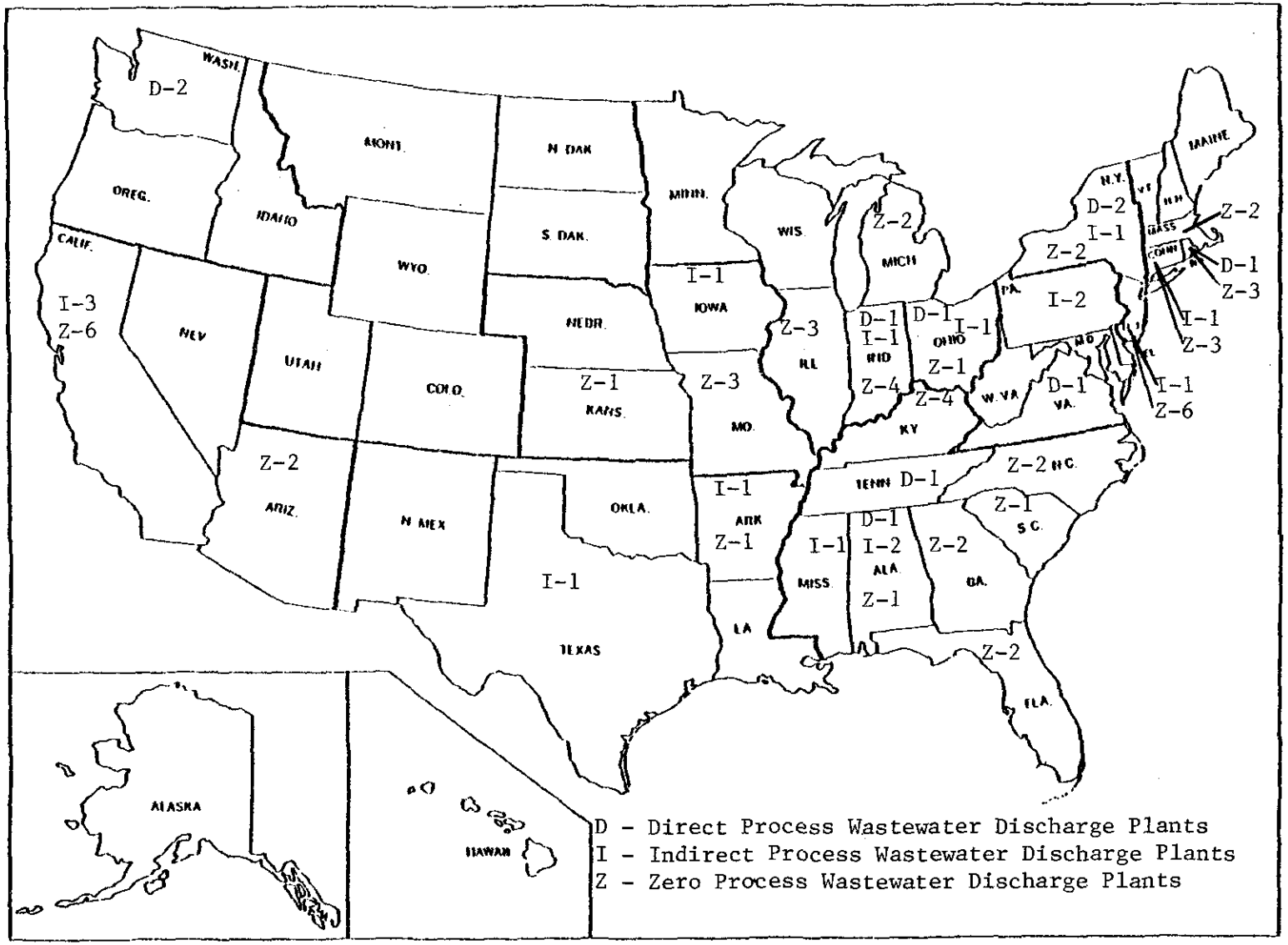

Figure III-10

GEOGRAPHICAL DISTRIBUTION OF PLANTS WITH
TUBE, WIRE, ROD AND BAR DRAWING

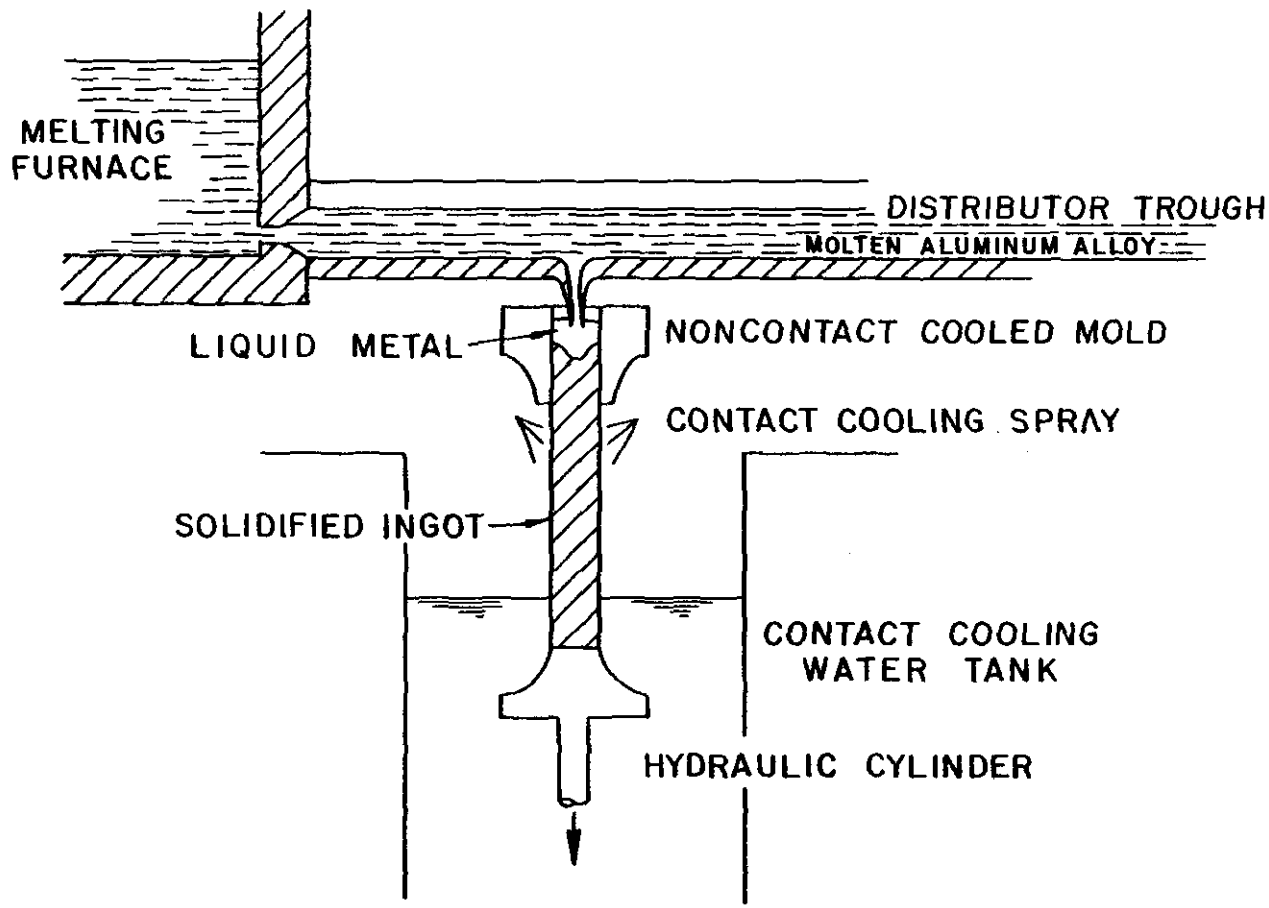

Figure III-11

DIRECT CHILL CASTING

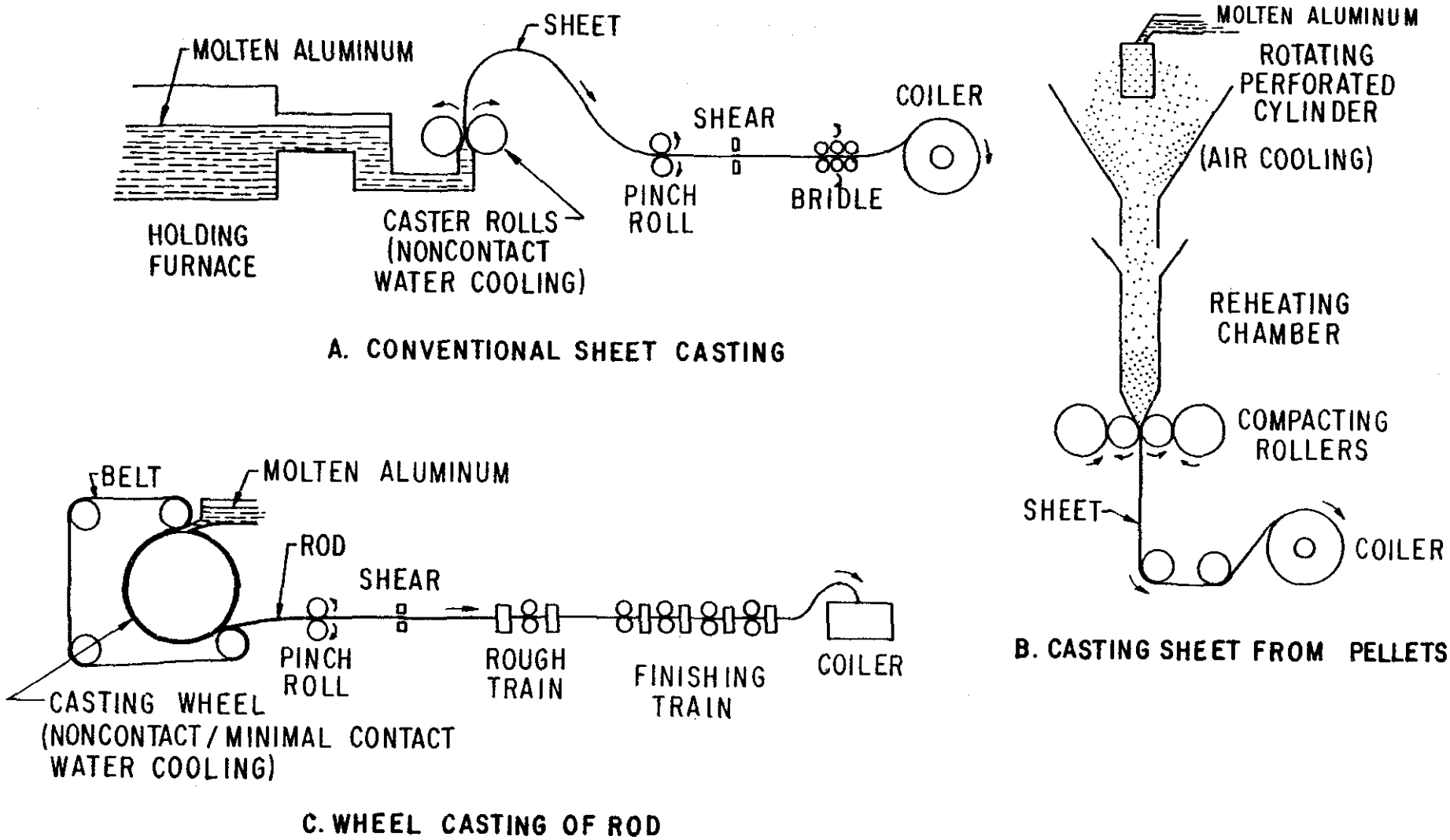

Figure III-12

CONTINUOUS CASTING

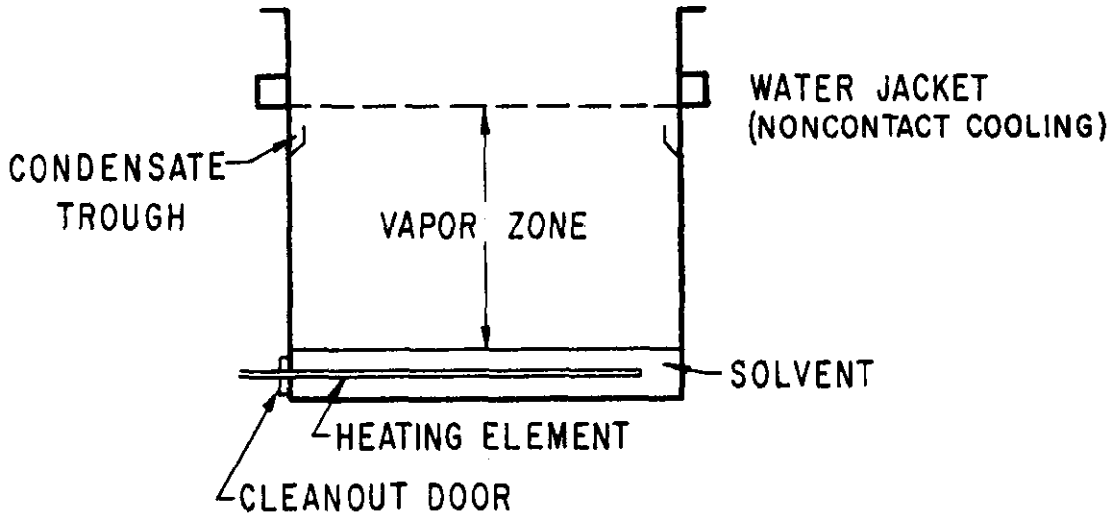

A. OPEN TOP VAPOR DEGREASER

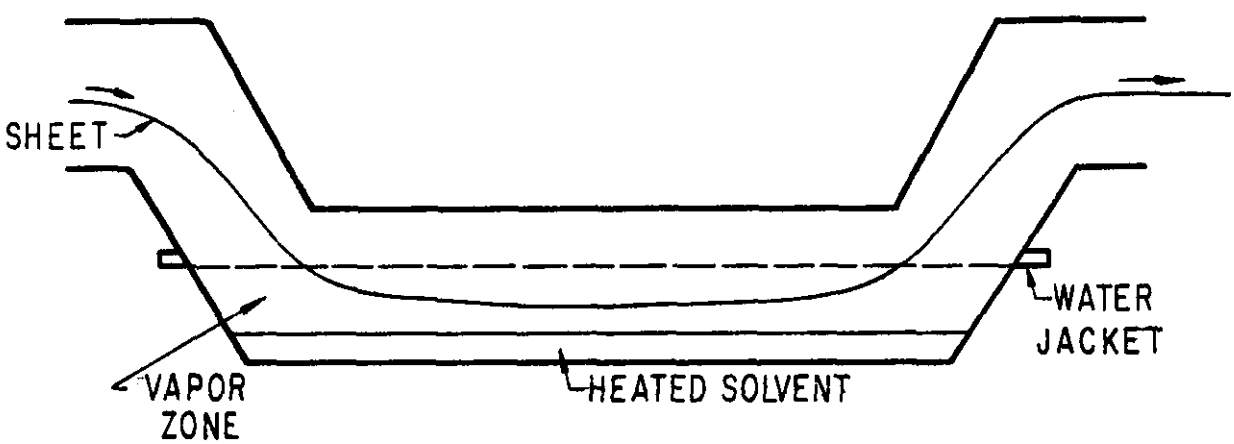

B. STRIP CONVEYORIZED DEGREASER

Figure III-13

VAPOR DEGREASING

SECTION IV

INDUSTRY SUBCATEGORIZATION

Subcategorization should take into account pertinent industry characteristics, manufacturing process variations, wastewater characteristics, and other factors. Effluent limitations and standards establish mass limitations on the discharge of pollutants which are applied, through the permit issuance process, to specific dischargers. To allow the national standard to be applied to a wide range of sizes of production units, the mass of pollutant discharge must be referenced to a unit of production. This factor is referred to as a production normalizing parameter and is developed in conjunction with subcategorization.

Division of the category into subcategories provides a mechanism for addressing process and product variations which result in distinct wastewater characteristics. The selection of production normalizing parameters provides the means for compensating for differences in production rates among plants with similar products and processes within a uniform set of mass-based effluent limitations and standards.

SUBCATEGORIZATION BASIS

Factors Considered

After considering the nature of the various segments of the aluminum forming industry and their operations, EPA evaluated possible bases for subcategorization. These include:

1. Raw Materials Used
2. Manufacturing Processes
3. Wastewater Characteristics
4. Products Manufactured
5. Water Use
6. Water Pollution Control Technology
7. Treatment Costs
8. Solid Waste Generation and Disposal
9. Size of Plant
10. Age of Plant
11. Number of Employees
12. Total Energy Requirements (Manufacturing Process and Water Treatment and Control)
13. Non-Water Quality Characteristics
14. Unique Plant Characteristics

In addition to considering how the individual factors influenced subcategorization, the interrelationship between different factors was also evaluated.

After considering the above factors, it was concluded that the aluminum forming category is comprised of separate and distinct processes with enough variability in products and wastes to require the division of the industry into a number of discrete subcategories. The individual processes, wastewater characteristics, and treatment effectiveness comprise the most significant factors in the subcategorization of this complex industry. The remaining factors either served to support and substantiate the subcategorization or were shown to be inappropriate bases for subcategorization. Discussion of each of the factors is presented later in this section.

Effluent limitations and standards establishing mass limitations on the discharge of pollutants are applied to direct dischargers through the permit issuance process and to indirect dischargers by POTW. The mass limitations are normalized to some factor of production to avoid the possibility of plants meeting the limitations by dilution rather than treatment. The production normalizing parameter (PNP) allows for equitable consideration of all plants, regardless of size or volume of production, because we assume that the mass of pollutants discharged in the raw wastewater is dependent on the production processes that generate the wastewater. Thus, the wastewater from a given process will have similar characteristics from plant to plant with a constant mass of pollutant generated per an appropriate unit of production.

To establish effluent limitations that relate the mass of pollutants discharged to production within the above subcategories, appropriate PNP's had to be selected. In this analysis, the following alternatives were considered:

1. mass of aluminum processed
2. number of products processed
3. area of aluminum processed
4. mass of process chemicals used

The evaluation of alternative PNP's, discussed further in this section, involved consideration of the same factors used in analyzing subcategorization.

Subcategorization Factors Considered

Each of the factors considered in developing subcategorization is discussed below. In evaluating these factors, the following items were addressed: the nature of subcategorization based on

the factor being considered; the positive and negative aspects of the potential subcategorization; and the potential PNP's that could be used in conjunction with this subcategorization scheme.

Raw Materials. The raw materials used in the aluminum forming category can be classified as follows:

- aluminum and aluminum alloys;
- lubricants;
- surface treatment, degreasing, and furnace fluxing chemicals; and
- additives to lubricants and cooling water.

At times, the same raw material may take on various effluent characteristics, and these will require different treatment. For example, an oil that is emulsified requires different treatment than the same oil in a pure state. Due to process variations and the proprietary nature of many chemical additives, it is difficult to establish a production normalizing parameter that directly relates pollutant discharge to specific process chemicals or lubricants.

Manufacturing Processes. There are four principal manufacturing processes used in aluminum forming: rolling, extrusion, forging, and drawing. Since the terminology is common in the aluminum forming industry, subcategorization using these four processes would be easily recognized and understood.

Typically, a company will have only one of these forming operations at an individual plant site, as tabulated below. Consequently, all the plant operations associated with that facility would be regulated under one subcategory.

PLANTS HAVING ONLY ONE ALUMINUM FORMING OPERATION ON-SITE

Forming Operation	Number of Plants With Only This Forming Operation	Percent of Total Plants With This Forming Operation
Rolling	37	65
Extrusion	144	88
Forging	13	81
Drawing	52	68

Subcategorization based on the principal manufacturing processes does not take into account the wastewater generated by minor or ancillary production processes. In many cases, the principal manufacturing process will contribute only a small fraction of the plant's total process wastewater.

Wastewater Characteristics and Treatment Technologies. Using wastewater characteristics as a criterion, the following subcategorization would result: emulsions; pure oils, also known as neat oils; oil-in water (nonemulsified) mixtures; and acidic or basic wastewaters. The major types of unit operations producing the identified waste streams are listed below.

Waste Stream	Unit Operations Producing the Waste Stream
Emulsions	Hot Rolling Cold Rolling Drawing
Neat Oils	Cold Rolling Drawing
Oil-in-water (nonemulsified) mixtures	Casting Solution heat treatment Cleaning or etching
Acidic or basic wastewaters	Extrusion die cleaning Cleaning or etching

This subcategorization scheme reflects the fact that effective wastewater pollutant removal is dependent on the wastewater characteristics and treatment system designed for removal of these pollutants. Treatment of emulsified and oil-in-water (nonemulsified) wastewaters in the same treatment system is inappropriate because additional treatment steps are required to break emulsions. Wastewaters generated during the cleaning or etching of aluminum with an acid or base solution may require pH adjustment with metals removal and may not need to be treated for oil removal. Finally, since spent neat oils are pure oil and contain no water, they may frequently be disposed of by incineration or contract hauling, thus requiring no treatment.

Products Manufactured. Another approach to subcategorization is based on the products manufactured, as listed below:

Product	Associated Manufacturing Process
Plate	Rolling
Sheet	Rolling
Strip	Rolling
Foil	Rolling
Rod and bar	Rolling, extrusion, drawing
Tubing	Extrusion or drawing
Miscellaneous shapes	Forging
Wire and cable	Drawing
Other (L shapes, I-beams, etc.)	Drawing or extrusion

The product manufactured is an excellent criterion for subcategorization if the waste characterization and production process to produce a given item are the same from plant to plant; however, this approach is not applicable to the manufacture of many aluminum formed products. For example, rods can be produced by two different production processes which generate similar wastewater (i.e., rolling and drawing), the mass of pollutants generated per unit of rod produced by rolling will be different than the amount generated by drawing the rod. Furthermore, some products produced by the same process may use different lubricants, therefore generating a waste with different characteristics. Strip and sheet, for example, can be produced by operations which use either neat or emulsified oils as lubricants.

This approach to subcategorization does not take into account ancillary operations, such as cleaning or etching, heat treatment, and casting, that may be found at any given plant. All of these factors make it very difficult to develop an equitable regulation using products manufactured as a basis for subcategorization.

Process Water Use. Major differences in water use (volume of water applied to a process per mass of product) between facilities with large and small production could warrant the development of subcategories.

As will be discussed in Section V, analysis of the data indicated that production normalized water use (i.e., gallons per ton of aluminum formed) for a given unit operation is usually independent of production volume. For example, a large direct chill casting operation will use about the same amount of water per ton of ingot produced as an operation casting much less aluminum by the same method. For certain unit operations, there is a trend for the normalized water use to decrease with increased production; however, no distinct break point could be identified to distinguish between water use at high production and low production plants.

Size. The number of employees and amount of aluminum processed were used to measure relative sizes of aluminum forming plants.

Wastewaters produced by a production process are largely independent of the number of plant employees. Variations in staff occur for many reasons, including shift differences, clerical and administrative support, maintenance workers, efficiency of plant operations, and market fluctuations. Due to these and other factors, the number of employees is constantly fluctuating, making it difficult to develop a correlation between the number of employees and wastewater generation.

Subcategorization based on size in terms of production of aluminum would group plants by the off-pounds of extrusions, sheets, rods, etc. This is a good method of subcategorization for an economic analysis on this category since plants producing rod will compete for the same market, and smaller production plants may have very different characteristics than large production plants. One drawback to this subcategorization approach is that it does not account for the ancillary operations frequently performed in conjunction with the forming operation.

Age. Aluminum forming is one of the newest large-volume metal industries. The demand for aluminum products has grown greatly since the end of World War II. Thus, aluminum forming plants are relatively modern; most are less than 30 years old. Furthermore, to remain competitive, plants must be constantly modernized. Modernization of production equipment, processes, treatment systems, and air pollution control equipment is undertaken on a continuous basis throughout the industry. Data regarding the age and date of the latest major modification for each plant were compiled from the dcp responses and summarized in Tables III-2 and III-3 (pp. 110 and 111), respectively.

Unique Plant Characteristics. Aluminum forming plants are unique on the basis of their physical locations and unit operations. These unit operations are necessary to the manufacturing process, but vary from plant to plant, depending on the product and specifications.

Location. The geographical distribution of the aluminum forming plants is shown in Figure III-2 (p. 109). The plants are not limited to any one geographical location, but they are generally located east of the Mississippi River, with pockets of plants located in the western states of Washington, California, and Texas. Although some cost savings may be realized for facilities located in nonurban settings where land is available to install lagoons, equivalent control of wastewater pollutant discharge can be achieved by urban plants with the use of physical and chemical

treatment systems that have smaller land requirements. Since most plants are located in the eastern part of the United States (an area where precipitation exceeds evaporation) or in urban areas, evaporation and land application of the wastewater are not commonly used. Presently, only 27 of the 277 plants evaporate or apply wastewater to land.

Unit Operations. The following is a list of the unit operations performed as part of the aluminum forming process.

Unit Operation	Waste Stream
Direct chill casting	Contact cooling water
Continuous rod casting	Spent lubricant Contact cooling water
Continuous sheet casting	Spent lubricant
Stationary casting	Dry operation
Hot rolling	Spent emulsion
Cold rolling	Spent neat oil or emulsion
Roll grinding	Spent emulsion
Degassing	Scrubber liquor
Extrusion die cleaning	Bath caustic solution Rinse water Scrubber liquor
Extrusion dummy block cooling	Contact cooling water
Forging	Scrubber liquor
Drawing	Spent neat oil, emulsion, or soap solution
Annealing	Atmosphere scrubber liquor
Press heat treatment	Contact cooling water

Unit Operation	Waste Stream
Solution heat treatment	Contact cooling water
Homogenizing	Dry operation
Artificial aging	Dry operation
Degreasing	Spent solvents
Cleaning or etching	Bath caustic, acid, or detergent solutions Rinse water Scrubber liquor
Sawing	Spent neat oil or emulsion
Swaging	Dry operation

Included in this list are several operations that either do not discharge a waste stream or discharge small quantities of pollutants. Furthermore, for subcategories based on these operations, this approach to subcategorization does not take into account the different types of oils used for lubrication. For example, drawing can use a neat oil lubricant or an emulsified oil lubricant. Waste characteristics and treatment schemes are different for the two types of oils used.

Subcategory Selection

In selecting the subcategories, the Agency tried to minimize the number of subcategories, but at the same time provide sufficient segmentation to account for the differences between processes and associated wastewater streams. Because the aluminum forming category encompasses a variety of operations that generate wastewaters with differing characteristics, it is necessary to consider a combination of factors when establishing subcategorization.

Each of the factors listed and discussed previously are evaluated below on the basis of suitability for subcategorizing the aluminum forming category.

Raw Materials. The pollutants in the wastewater discharged are dependent on the raw materials; however, the amount of pollutants discharged does not directly correlate with the nature of raw materials used. Discharge of heavy metals may result from the presence of these compounds in the aluminum alloy; however, the amount of metal that enters the wastewater is largely dependent

on the operation performed on the alloy. For instance, etching the workpiece will result in a higher metal discharge than rolling the workpiece. Subcategorization solely on the basis of raw materials was considered inappropriate for this category because of the difficulty associated with correlating raw materials with the discharge of pollutants.

Manufacturing Processes. Aluminum forming is widely characterized by the principal manufacturing processes of rolling, extruding, forging, and drawing. The industry has built plants around a single production process and is familiar with the terminology. Pollutant generation can be related to the mass of production from these processes. On this basis, subcategorization based on manufacturing processes is appropriate for this category; however, the four processes of rolling, extruding, forging, and drawing do not account for the different lubricants, requiring different treatments, that can be used for the rolling and drawing operations. This approach to subcategorization also fails to consider the unique properties of the aluminum forming plants in the variety of ancillary unit operations that may be present, many of which generate large volumes of wastewater. Therefore, the manufacturing processes by themselves are not suitable for subcategorizing the aluminum forming category.

Wastewater Characteristics. Wastewater characteristics are very important in the consideration of appropriate treatment technology and form the basis for effluent limitations. Subcategorization based solely on wastewater characteristics is inappropriate for the aluminum forming category since it is difficult to develop a production normalizing parameter. More than one manufacturing process may generate a waste stream with the same characteristics, such as rolling and drawing which both can use neat oils and emulsions. Volume of wastewater, or in this case lubricant generated per the mass of aluminum rolled, may vary greatly with the volume generated per mass of aluminum drawn. The purpose of subcategorizing is to allow for equitable regulations across a category and the subcategories must allow for a normalizing parameter to establish mass limitations. Wastewater characteristics alone are inappropriate for subcategorizing the aluminum forming category.

Products Manufactured. As discussed previously, the same product can be manufactured by as many as three of the aluminum forming operations. The mass of pollutant generated per unit of product will be different depending on the type of forming operation employed. Subcategorization based on products manufactured does not account for the ancillary operations, such as cleaning or etching, heat treatment, and casting, that may be found at any given plant. These factors make it very difficult to develop a reliable effluent limitation using products manufactured as a basis for the subcategorization. Thus, this is an inappropriate

approach for subcategorizing the aluminum forming category to establish equitable effluent limitations; however, subcategorization on the basis of products manufactured is an appropriate approach for characterizing the industry for an economic impact analysis where the emphasis is on a plant's ability to compete in the marketplace.

Process Water Use. Process water use, when related to the mass of aluminum processed, is fairly constant regardless of the production volume. Since no distinct differences in water use could be identified between plants with large production volumes and plants with small production volumes, the Agency has determined that this approach is inappropriate to subcategorize the aluminum forming category. Flows which are normalized by some aspect of production are used to establish effluent limitations; variations in water use or discharge were considered and are discussed in detail in Sections V and IX.

Size. Size in terms of employment is considered to be an inappropriate basis for subcategorization because it cannot be directly related to the generation of wastewater. Size in terms of production is also considered to be inappropriate for subcategorizing to establish effluent guidelines, since it does not account for the wastewaters generated by the ancillary operations.

Age. Since most aluminum forming plants have been built in the past 30 years and have been modernized frequently, age is not a valid basis for subcategorization.

Location. Location does not appear to be a significant factor on which to base subcategorization. Most aluminum forming plants are located in urban areas; thus, there is no vast disparity in land availability between urban and rural plants. In addition, few plants use land application or evaporation to treat aluminum forming wastewaters.

Unit Operations. The principal benefit from using unit operations as a basis for subcategorization is that an appropriate effluent limitation can be established for each waste stream generated. For each regulated pollutant, a specific pollutant mass discharge value could be calculated for each waste stream present at the facility. These values would be summed to determine the total mass discharge allowed for that pollutant at that facility.

The difficulties with this approach are the large number of subcategories (approximately 25) and the need for a separate production normalizing parameter for each subcategory or unit operation.

Primarily because of the large number of subcategories and complications associated with it, subcategorization based on unit operations alone was not considered to be appropriate.

The aluminum forming category is not well suited to subcategorization using any one of the factors discussed in this section. By applying a combination of factors, such as manufacturing processes, unit operations, raw materials, and wastewater characteristics, the aluminum forming category can be divided into six subcategories:

1. Rolling with Neat Oils
2. Rolling with Emulsions
3. Extrusion
4. Forging
5. Drawing with Neat Oils
6. Drawing with Emulsions or Soaps

Each manufacturing process consists of the four principle forming operations plus a number of ancillary operations. Each of these unit operations must be addressed by the limitations and standards. Since not all plants with a given manufacturing process have the same number of ancillary unit operations, some method of equating the plants must be developed. In addition to the principle forming operation, there are some ancillary operations that are unique to the principle forming operations and others that are necessary to manufacture the final product. For the purpose of subcategorization, the forming operation and these closely related ancillary operations are grouped to comprise a core operation. Another group of operations is not unique to the forming operations, is not always necessary in the manufacturing process, and does not discharge wastewater. For simplification, these are included with the other operations in the core. The core thus becomes a distinct regulatory unit that for the purpose of establishing limits is viewed as a single source of pollutants.

There are still a number of unit operations that do not fit into the core. These operations are not unique to a forming process, discharge wastewater (usually large volumes), and are not always necessary to the manufacturing process. Because these operations make significant contributions to the pollutant loadings when they are performed, but they are not performed consistently throughout the subcategory, they are not included in the core. Instead, these operations are included in the subcategories as ancillary operations that for regulatory purposes can be added to the core when appropriate to limit the pollutant discharges from aluminum forming plants.

Subcategorization on the basis of the core and ancillary operations as previously defined does not take into account the different types of wastes that can be generated by rolling and

drawing. To account for the two types of wastes generated by rolling and drawing lubricants, four distinct operations were formed: rolling that uses neat oils, rolling that uses emulsions, drawing that uses neat oils, and drawing that uses emulsions or soaps. These four operations are still identifiable by the industry and account for the differences in wastewater generated by the same forming operation. Furthermore, each can be related to some unit of production to normalize plant practices and can be applied to the subcategorization scheme of a core and ancillary operations. Thus, the manufacturing processes, unit operations, raw materials, and wastewater characteristics all play an important part in subcategorizing the aluminum forming category.

Production Normalizing Parameter

In order to ensure equitable regulation of the category, effluent limitations guidelines and standards of performance have been established on a pollutant mass discharge basis (i.e., mass of pollutant discharged per unit of production). The unit of production specified in these regulations is known as a production normalizing parameter (PNP). Establishing concentration limitations rather than mass-based limits was considered; however, a plant that diluted its wastewater would have an advantage in meeting concentration-based limitations over a plant that conserved water. Thus, with concentration limitations a plant might actually be penalized for having good water conservation practices. To avoid this possibility, the mass of pollutants in the discharge has been related to a specific PNP to establish a limitation that will limit the pollutant mass discharged proportionate to an amount of production.

The approach used in selecting the appropriate PNP for a given subcategory or ancillary operation is two-fold: achieving a correlation between production and the corresponding discharge of pollutants and ensuring feasibility and ease of regulation. Some of the alternatives considered in specifying the PNP include:

1. Mass of aluminum processed,
2. Number of finished products manufactured,
3. Surface area of aluminum processed, and
4. Mass of process chemicals used.

The evaluation of these alternatives is summarized in the discussion that follows.

Mass of Aluminum Processed. The aluminum forming industry typically maintains production records of the pounds of aluminum processed by an individual unit operation. Availability of these production data and lack of data for other production parameters, such as area of aluminum and number of products, makes this the most convenient parameter to use. The aluminum forming dcp

requested three production values: the capacity production rate for the unit operation in question, the maximum production rate achieved in 1977, and the average production rate for 1977, all in lb/hr. The PNP is based on the average production rates reported in the dcp's. In most cases, the plants were operating their units at or near the capacity production rate. The average production rate will correlate with the mass of pollutants found in the wastewater.

Number of End Products Processed. The number of products processed by a given plant would not account for the variations in size and shape typical of formed products. Extrusions, for instance, are produced in a wide range of sizes. It would be unreasonable to expect the quenching of a large extrusion to use the same amount of water required for a smaller extruded product.

Surface Area of Aluminum Processed. The area of aluminum processed is not generally kept or known by industry. In some cases, such as forging of miscellaneous shapes, surface area data would be difficult to determine. Surface area data would be difficult to collect. Surface area is an appropriate production normalizing parameter for aluminum which has been cleaned or etched (for these operations, the water use and discharge ought to show a correlation with surface area).

Mass of Process Chemicals Used. The mass of process chemicals used (e.g., lubricants, solvents, and cleaning or etching solutions) is dependent on the processes which the aluminum undergoes rather than the other raw materials used in the process.

Selection of the Production Normalizing Parameter

Two of the four parameters considered, number of finished products and mass of process chemicals are not appropriate PNP's for the aluminum forming category. The number of finished products is inappropriate because of the lack of consistency and uniformity in the finished products manufactured by an aluminum forming plant, particularly by an extrusion or forging plant. Also the processes vary from plant to plant even when producing essentially the same product. The mass of process chemicals is an inappropriate PNP because the mass of pollutants discharged is more directly related to the type of operation using the process chemicals than the amount of these compounds used, although the process chemicals frequently enter the wastewater.

The surface area of product as a PNP would relate the mass of pollutants discharged to the surface area of aluminum that contacts the process wastewater. This parameter would be appropriate for a number of aluminum forming operations that produce wastewater, since the mass of pollutants entering the wastewater is proportional to the aluminum it is contacted with. The Agency

is not selecting surface area as a production normalizing parameter because surface area is not always the most appropriate parameter, especially in contact cooling situations where the volume of water used is more closely related to the mass of product. Aluminum formed products, especially forged products or extrusions, also come in a wide variety of shapes and the surface area of these shapes would be difficult to determine.

The fourth parameter considered is the mass of product. The Agency has selected mass as the most appropriate PNP. The mass of pollutants can be related to the mass of aluminum processed and most companies keep production records in terms of mass. For the six subcategories, the core operations are closely related to the principle forming operation and the mass of pollutants generated from each ought to be dependent on the mass of aluminum processed through the forming operation. Thus, there is only one PNP for each core based on the mass of pollutants processed through the forming operation. Each ancillary operation has a separate PNP based on the mass of aluminum processed through the ancillary operation. An example of how the PNP's apply when establishing mass discharge limits is shown in Section IX.

The PNP for aluminum forming is "off-kilograms" or the kilograms of product removed from a machine at the end of a process cycle. In the rolling process aluminum ingot enters the mill to be processed. Following one process cycle which may substantially reduce the ingot's thickness, the aluminum is removed from the rolling mill where it may be processed through another operation, such as annealing, sizing, cleaning, or it may simply be stored before being brought back to the rolling mill for another process cycle, further reducing the thickness. The mass of aluminum removed from the rolling mill after each process cycle multiplied by the number of process cycles is the PNP for that process. The core of each subcategory has one PNP which is based on the mass of aluminum processed through the principal forming operation. There is a different PNP for each ancillary operation which is the mass of aluminum removed from the process following each process cycle. For example, the PNP for solution heat treatment would be the mass of aluminum removed from the contact cooling water quench that follows solution heat treatment. In the case of press heat treatment the PNP is still the mass of aluminum removed from the contact cooling water quench that immediately follows extrusion.

DESCRIPTION OF SELECTED SUBCATEGORIES

Subcategory Terminology and Usage

Each subcategory is broken into "core" and "ancillary" operations. The core is composed of those operations that always occur with the subcategory, are dry operations, or are an

integral part of the manufacturing process. The core limitation is based on the mass of aluminum passed through the principle manufacturing unit. The core limitation does not vary within a given subcategory and applies to all the plants in that subcategory.

Operations not included in the core are classified as ancillary operations. These are operations involving discharged wastewater streams of significant pollutant concentrations and flows that may or may not be present at any one facility. The ancillary operations are based on the mass of aluminum processed through the given ancillary operations. In other words, the mass of aluminum cast by the direct chill method is the normalizing parameter for casting, the mass of aluminum cleaned or etched is the normalizing parameter for cleaning or etching. If they are present, the permit writer adds the appropriate pollutant limitations to the core limitation to determine the effluent limitation for the facility as a whole.

The ancillary operation of cleaning or etching shall include all surface treatment operations, including chemical or electrochemical anodizing and conversion coating when performed as an integral part of the aluminum forming process. A cleaning or etching operation is defined by the cleaning or etching baths which are followed by a rinse. Multiple baths would be considered multiple cleaning or etching operations only when each bath is followed by a rinse and a separate limitation would apply to each bath rinse combination. Multiple rinses following a single bath will be regulated by a single limitation.

In the following discussion, the aluminum forming subcategories are presented on an individual basis. The core and ancillary operations included in each subcategory are briefly described, and the appropriate production normalizing parameters are identified.

Some plants will include more than one subcategory. The frequency of plants with more than one subcategory is tabulated below. In these cases, the subcategories should be used as building blocks to establish permit limitations. It should be noted that in most cases the ancillary operations will be included with only one subcategory. The ancillary operation is associated with the core operation it is most closely associated with. As an example, consider a rolling plant which has both rolling with neat oils and rolling with emulsions. As one of the ancillary operations, this plant has direct chill casting. Since the casting precedes rolling with emulsions and the rolling with emulsions operation is performed on the product of the casting operation, casting will be considered an ancillary operation only to the Rolling with Emulsions Subcategory.

The lists presented in the following discussions provide information specific to the subcategory being addressed. The frequency of occurrence of ancillary streams looks at each ancillary operation individually and apart from any other ancillary operations that may be present at the same plant. Thus, the sum of the frequencies of the ancillary operations cannot be related to the number of plants in that subcategory. The same methods have been applied to the frequency of subcategory overlap. Since there are some plants that will be in more than one subcategory, the sum of plants in each subcategory will be larger than the number of plants in the category.

INCIDENCE OF OVERLAP WITH MORE THAN ONE OTHER SUBCATEGORY

Subcategory	Total Plants in One or More Subcategory	Percent of Total Plants in the Subcategory
Rolling with Neat Oils	34	68
Rolling with Emulsions	28	86
Extrusion	22	13
Forging	9	57
Drawing with Neat Oils	25	38
Drawing with Emulsions or Soaps	5	38

Rolling with Neat Oils Subcategory

This subcategory is applicable to all wastewater discharges resulting from or associated with aluminum rolling operations in which neat oils are used as a lubricant. The unit operations and associated waste streams covered by this subcategory and the appropriate production normalizing parameters are listed below.

ROLLING WITH NEAT OILS SUBCATEGORY

Unit Operation	Waste Stream	Production Normalizing Parameter
CORE:		
Rolling with neat oils	Spent lubricant	Mass of aluminum rolled with neat oil
Roll grinding	Spent emulsion	Mass of aluminum rolled with neat oil
Stationary casting	None	Mass of aluminum rolled with neat oil
Homogenizing	None	Mass of aluminum rolled with neat oil
Annealing	Atmosphere scrubber liquor	Mass of aluminum rolled with neat oil
Artificial aging	None	Mass of aluminum rolled with neat oil
Degreasing	Spent solvent	Mass of aluminum rolled with neat oil
Sawing	Spent lubricant	Mass of aluminum rolled with neat oil
Miscellaneous non-descript wastewater sources	Various	Mass of aluminum rolled with neat oil
ANCILLARY:		
Continuous sheet casting	Spent lubricant	Mass of aluminum sheet cast by continuous methods
Rolling solution heat treatment	Contact cooling water	Mass of aluminum quenched
Cleaning or etching	Bath	Mass of aluminum cleaned or etched
	Rinse	Mass of aluminum cleaned or etched
	Scrubber liquor	Mass of aluminum cleaned or etched

The following list summarizes data pertaining to the number of plants in this subcategory and the waste streams which are present at those plants:

Associated Waste Streams	Frequency: No. of Plants	Frequency: Percent of Total Plants in the Subcategory
CORE:		
Rolling with neat oils spent lubricant	50	100
Roll grinding spent emulsion	*	*
Annealing atmosphere scrubber liquor	1	2
Sawing spent lubricant	*	*
Miscellanous nondescript wastewater	*	*
ANCILLARY:		
Continuous sheet casting		
Spent lubricant	11	22
Rolling solution heat treatment		
Contact cooling water	6	12
Cleaning or etching		
Bath	9	18
Rinse	9	18
Scrubber liquor	0	0

*An accurate count could not be determined from available data, assumed to be present at all plants.

As this table shows, 50 of the plants surveyed in this study are included in the Rolling with Neat Oils Subcategory. For the majority of these plants, the core regulations can be applied without alteration because no ancillary streams are present. However, continuous sheet casting is practiced at 11 plants (22 percent), and cleaning or etching of the rolled product is practiced at 9 plants (18 percent). The presence of heat treatment was reported at only six plants (12 percent).

Over half of the plants (33 of 50) associated with this subcategory were also associated with one or more additional subcategories. The most common case, overlap with the Rolling with Emulsions Subcategory, was reported at 19 of the 50 plants (38 percent). Frequently, rolling of aluminum with emulsions is followed by rolling to desired gauge using neat oils. It is important to realize that at these plants, operations such as casting were considered to be associated with the emulsion rolling rather than neat oil rolling for the purpose of subcategorization. In this way, duplication of streams is avoided. Seven of the plants (14 percent) were included in both the Rolling with Neat Oils and Drawing with Neat Oils subcategories. In these cases, the aluminum was usually first rolled and then drawn to form the desired product. If the drawn product was then etched or heat treated, these operations were associated with drawing with neat oils rather than rolling with neat oils. In only four cases (8 percent) was overlap with more than one other subcategory found to exist.

As discussed in Section III (p. 100), the annealing operation does not use process water. One of the plants surveyed anneals aluminum which is rolled with neat oils and derives the inert gas atmosphere used in its annealing process from furnace off gases. Because of the sulfur content of furnace fuels, the off gases require cleaning with wet scrubbers to remove contaminants. Other plants import cleaned gases or burn natural gas to provide an inert atmosphere. Since the Agency believes that this scrubber is necessary to the operation of the annealing furnace, an allowance has been included as part of the core of the Rolling with Neat Oils Subcategory. For the Rolling with Neat Oils Subcategory, two core allowances will be established, because most plants do not have an annealing scrubber liquor flow. Separate allowances will be established for core waste streams without an annealing furnace scrubber and for core waste streams with an annealing furnace scrubber.

Rolling with Emulsions Subcategory

This subcategory is applicable to all wastewater discharges resulting from or associated with aluminum rolling operations in which oil-in-water emulsions are used as lubricants. The unit operations and associated waste streams covered by this subcategory and the appropriate production normalizing parameters are listed below.

ROLLING WITH EMULSIONS SUBCATEGORY

Unit Operation	Waste Stream	Production Normalizing Parameter
CORE:		
Rolling with emulsions	Spent emulsion	Mass of aluminum rolled with emulsions
Roll grinding	Spent emulsion	Mass of aluminum rolled with emulsions
Stationary casting	None	Mass of aluminum rolled with emulsions
Homogenizing	None	Mass of aluminum rolled with emulsions
Artificial aging	None	Mass of aluminum rolled with emulsions
Degreasing	None	Mass of aluminum rolled with emulsions
Annealing	None	Mass of aluminum rolled with emulsions
Sawing	Spent lubricant	Mass of aluminum rolled with emulsions
Miscellaneous non-descript wastewater sources	Various	Mass of aluminum rolled with emulsions
ANCILLARY:		
Direct chill casting	Contact cooling water	Mass of aluminum cast by direct chill method
Rolling solution heat treatment	Contact cooling water	Mass of aluminum quenched
Cleaning or etching	Bath	Mass of aluminum cleaned or etched
	Rinse	Mass of aluminum cleaned or etched
	Scrubber liquor	Mass of aluminum cleaned or etched

The following list summarizes data pertaining to the number of plants in this subcategory and the waste streams which are present at those plants.

Associated Waste Streams	Frequency: No. of Plants	Frequency: Percent of Total Plants in the Subcategory
CORE:		
Rolling with emulsions spent emulsion	29	100
Roll grinding spent emulsion	*	*
Sawing spent lubricant	*	*
Miscellaneous nondescript wastewater	*	*
ANCILLARY:		
Direct chill casting		
Contact cooling water	20	69
Rolling solution heat treatment		
Contact cooling water	8	28
Cleaning or Etching		
Bath	7	24
Rinse	7	24
Scrubber liquor	2	7

*An accurate count could not be determined from available data, assumed to be present at all plants.

Of the plants surveyed in this study, 29 were classified as belonging to the Rolling with Emulsions Subcategory. The core streams in this subcategory include rolling emulsions that are expected to be present at every plant. As shown in the preceding list, the regulation of plants in this subcategory will usually require consideration of waste streams associated with ancillary operations. Direct chill casting is associated with the rolling operations at 20 of the plants surveyed. Solution heat treatment is practiced at eight plants. Seven plants will also require regulation of cleaning or etching baths and rinses as an ancillary stream, and two plants will receive an allocation for a cleaning or etching scrubber liquor discharge.

In all but one case (97 percent), plants in the Rolling with Emulsions Subcategory were also included in one or more other subcategories. The most common case, overlap with the Rolling with Neat Oils Subcategory, was reported at 19 of the 29 plants (66 percent). Frequently, rolling of aluminum with emulsions is followed by rolling to desired gauge using neat oils. It is important to realize that at these plants, operations such as direct chill casting were considered to be associated with the emulsion rolling rather than neat oil rolling for the purpose of subcategorization. In this way, duplication of streams is avoided. Two of the plants (7 percent) were included in both the

Rolling with Emulsions and Drawing with Neat Oils subcategories. Two of the plants (7 percent) were included in both the Rolling with Emulsions and Extrusion subcategories. In five cases (17 percent), overlap with more than one other subcategory was found to exist.

Extrusion Subcategory

This subcategory is applicable to all wastewater discharges resulting from or associated with aluminum extrusion operations. The unit operations and associated waste streams covered by this subcategory and the appropriate production normalizing parameters are listed below.

EXTRUSION SUBCATEGORY

Unit Operation	Waste Stream	Production Normalizing Parameter
CORE:		
Extrusion	Dummy block cooling	Mass of aluminum extruded
Die cleaning	Bath and rinse	Mass of aluminum extruded
	Scrubber liquor	Mass of aluminum extruded
Stationary casting	None	Mass of aluminum extruded
Annealing	None	Mass of aluminum extruded
Homogenizing	None	Mass of aluminum extruded
Artificial aging	None	Mass of aluminum extruded
Degreasing	Spent solvent	Mass of aluminum extruded
Sawing	Spent lubricant	Mass of aluminum extruded
Miscellaneous non-descript wastewater sources	Various	Mass of aluminum extruded

EXTRUSION SUBCATEGORY (Continued)

Unit Operation	Waste Stream	Production Normalizing Parameter
ANCILLARY:		
Direct chill casting	Contact cooling water	Mass of aluminum cast by direct chill method
Extrusion press or solution heat treatment	Contact cooling water	Mass of aluminum quenched
Cleaning or etching	Bath	Mass of aluminum cleaned or etched
	Rinse	Mass of aluminum cleaned or etched
	Scrubber liquor	Mass of aluminum cleaned or etched
Degassing	Scrubber liquor	Mass of aluminum degassed

The following list summarizes data pertaining to the number of plants in this subcategory and the waste streams which are present at those plants:

Associated Waste Streams	Frequency: No. of Plants	Frequency: Percent of Total Plants in the Subcategory
CORE:		
Extrusion	163	100
Die cleaning bath and rinse	*	*
Die cleaning scrubber liquor	*	*
Sawing spent lubricant	*	*
Miscellaneous nondescript wastewater	*	*

Associated Waste Streams	Frequency: No. of Plants	Frequency: Percent of Total Plants in the Subcategory
ANCILLARY:		
Direct chill casting		
Contact cooling water	44	27
Extrusion press and solution heat treatment		
Contact cooling water	52	32
Cleaning or etching		
Bath	41	25
Rinse	41	25
Scrubber liquor	2	1
Degassing		
Scrubber liquor	1	1

*An accurate count could not be determined from available data, assumed to be present at all plants.

The Extrusion Subcategory includes more plants than any other subcategory, 163, or approximately half of the plants surveyed. Although an accurate count was not possible from the available data, extrusion die cleaning is expected to be present at every extrusion plant, and this operation serves as the principal component of the core for this subcategory.

More than half of the plants in this subcategory can be regulated on the basis of the core allocation alone, but the other facilities will require the consideration of ancillary streams. As shown in the preceding list, the most common ancillary operation is heat treatment (associated with extrusion at 52 of these plants), followed by direct chill casting (27 percent) and cleaning or etching (25 percent).

Although most of the plants in the Extrusion Subcategory (88 percent) are not associated with any other subcategories, some overlap does occur. In the most common example, nine of the extrusion plants (6 percent) are also associated with the Drawing with Neat Oils Subcategory.

Forging Subcategory

This subcategory is applicable to all wastewater discharges resulting from or associated with aluminum forging operations. The unit operations and associated waste streams covered by this subcategory and the appropriate production normalizing parameters are listed below.

FORGING SUBCATEGORY

Unit Operation	Waste Stream	Production Normalizing Parameter
CORE:		
Forging	None	Mass of aluminum forged
Artificial aging	None	Mass of aluminum forged
Annealing	None	Mass of aluminum forged
Degreasing	Spent solvent	Mass of aluminum forged
Sawing	Spent lubricant	Mass of aluminum forged
Miscellaneous non-descript wastewater sources	Various	Mass of aluminum forged
ANCILLARY:		
Forging air pollution control	Scrubber liquor	Mass of aluminum forged
Forging solution heat treatment	Contact cooling water	Mass of aluminum quenched
Cleaning or etching	Bath	Mass of aluminum cleaned or etched
	Rinse	Mass of aluminum cleaned or etched
	Scrubber liquor	Mass of aluminum cleaned or etched

The following list summarizes data pertaining to the number of plants in this subcategory and the waste streams which are present at these plants:

Associated Waste Streams	Frequency: No. of Plants	Frequency: Percent of Total Plants in the Subcategory
CORE:		
Sawing spent lubricant	16	100
Miscellaneous nondescript wastewater	*	*
ANCILLARY:		
Forging air pollution control		
Scrubber liquor	4	25
Forging solution heat treatment		
Contact cooling water	11	69
Cleaning or etching		
Bath	13	81
Rinse	13	81
Scrubber liquor	2	13

*An accurate count could not be determined from available data, assumed to be present at all plants.

Of the 16 plants identified with the Forging Subcategory, only 1 could be regulated by the core streams alone. The most common ancillary streams, cleaning or etching baths and rinses, are each associated with 81 percent of the forging plants. Frequently, more than one ancillary stream was associated with a given plant. Six of the sixteen forging plants (38 percent) involved at least three such streams.

Most of the plants in the Forging Subcategory (81 percent) did not have operations associated with any other subcategory. No overlap occurred with only one other subcategory. Some overlap did occur, however, with the Extrusion and Drawing subcategories.

Drawing with Neat Oils Subcategory

This subcategory is applicable to all wastewater discharges resulting from or associated with aluminum drawing operations in which neat oils are used as a lubricant. The unit operations and associated waste streams covered by this subcategory and the appropriate production normalizing parameters are listed below.

DRAWING WITH NEAT OILS SUBCATEGORY

Unit Operation	Waste Stream	Production Normalizing Parameter
CORE:		
Drawing with neat oils	Spent lubricant	Mass of aluminum drawn with neat oils
Stationary casting	None	Mass of aluminum drawn with neat oils
Homogenizing	None	Mass of aluminum drawn with neat oils
Annealing	None	Mass of aluminum drawn with neat oils
Artificial aging	None	Mass of aluminum drawn with neat oils
Degreasing	Spent solvent	Mass of aluminum drawn with neat oils
Sawing	Spent lubricant	Mass of aluminum drawn with neat oils
Swaging	None	Mass of aluminum drawn with neat oils
Miscellaneous non-descript wastewater sources	Various	Mass of aluminum drawn with neat oils
ANCILLARY:		
Continuous rod casting	Contact cooling water	Mass of aluminum rod cast by continuous methods
	Spent lubricant	Mass of aluminum rod cast by continuous methods
Drawing solution heat treatment	Contact cooling water	Mass of aluminum quenched
Cleaning or etching	Bath	Mass of aluminum cleaned or etched
	Rinse	Mass of aluminum cleaned or etched
	Scrubber liquor	Mass of aluminum cleaned or etched

The following list summarizes data pertaining to the number of plants in this subcategory and the waste streams which are present at those plants:

Associated Waste Streams	Frequency: No. of Plants	Frequency: Percent of Total Plants in the Subcategory
CORE:		
Drawing with neat oils spent lubricant	66	100
Sawing spent lubricant	*	*
Miscellaneous nondescript wastewater	*	*
ANCILLARY:		
Continous rod casting		
Contact cooling water	2	3
Spent lubricant	2	3
Drawing solution heat treatment		
Contact cooling water	8	12
Cleaning or etching		
Bath	13	20
Rinse	13	20
Scrubber liquor	0	0

*An accurate count could not be determined from available data, assumed to be present at all plants.

The Drawing with Neat Oils Subcategory is the second largest aluminum forming subcategory and contains 66 of the 277 plants surveyed in this study. The majority of the plants in the Drawing with Neat Oils Subcategory can be regulated on the basis of the core alone. Heat treatment contact cooling water and cleaning or etching baths and rinses are the most common ancillary streams in this subcategory.

Frequent overlap with other subcategories was noted. The most common case was with the Extrusion Subcategory; nine of the neat oil drawing plants (14 percent) were found to have extrusion processes as well. In all, 36 percent of the plants in the Drawing with Neat Oils Subcategory were also associated with one or more other alumminum forming subcategories.

Drawing with Emulsions or Soaps Subcategory

This subcategory is applicable to all wastewater discharges resulting from or associated with the aluminum drawing operations which use oil-in-water emulsion or soap solution lubricants. The unit operations and associated waste streams covered by this subcategory and the appropriate production normalizing parameters are listed below.

DRAWING WITH EMULSIONS OR SOAPS SUBCATEGORY

Unit Operation	Waste Stream	Production Normalizing Parameter
CORE:		
Drawing with emulsions or soaps	Spent emulsion	Mass of aluminum drawn with emulsions or soaps
Stationary casting	None	Mass of aluminum drawn with emulsions or soaps
Artificial aging	None	Mass of aluminum drawn with emulsions or soaps
Homogenizing	None	Mass of aluminum drawn with emulsions or soaps
Annealing	None	Mass of aluminum drawn with emulsions or soaps
Degreasing	Spent solvent	Mass of aluminum drawn with emulsions or soaps
Sawing	Spent lubricant	Mass of aluminum drawn with emulsions or soaps
Swaging	None	Mass of aluminum drawn with emulsions or soaps
Miscellaneous non-descript wastewater sources	Various	Mass of aluminum drawn with emulsions or soaps
ANCILLARY:		
Continuous rod casting	Contact cooling water	Mass of aluminum rod cast by continuous methods
	Spent lubricant	Mass of aluminum rod cast by continuous methods
Drawing solution heat treatment	Contact cooling water	Mass of aluminum quenched
Cleaning or etching	Bath	Mass of aluminum cleaned or etched
	Rinse	Mass of aluminum cleaned or etched
	Scrubber liquor	Mass of aluminum cleaned or etched

The following list summarizes data pertaining to the number of plants in this subcategory and the waste streams which are present at these plants:

Associated Waste Streams	Frequency: No. of Plants	Frequency: Percent of Total Plants in the Subcategory
CORE:		
Drawing with emulsions or soaps spent lubricants	13	100
Sawing spent lubricants	*	*
Miscellaneous nondescript wastewater	*	*
ANCILLARY:		
Continuous rod casting		
Contact cooling water	1	8
Spent lubricant	1	8
Drawing solution heat treatment		
Contact cooling water	4	31
Cleaning or etching		
Bath	1	8
Rinse	1	8
Scrubber liquor	0	0

*An accurate count could not be determined from available data, assumed to be present at all plants.

The Drawing with Emulsions or Soaps Subcategory is the smallest of the aluminum forming subcategories, with only 13 plants. The principal core stream in this subcategory, spent emulsions from drawing with emulsions or soaps, is present at all 13 plants. For the majority of plants, the core streams accurately describe all wastewater associated with the subcategory. At four of the plants (31 percent), solution heat treatment is applied to the drawn product. Continuous rod casting and cleaning or etching were each reported less frequently. Consideration of the appropriate ancillary streams is required for these plants.

Most of the plants (69 percent) are not associated with any other subcategories. Overlap with other subcategories was observed at four of the thirteen plants surveyed (31 percent).

SECTION V

WATER USE AND WASTEWATER CHARACTERISTICS

This section presents the analytical data that characterize the raw wastewater and indicate the effectiveness of various wastewater treatment processes and the flow data that serve as the basis for developing regulatory flows in the aluminum forming category. The data were obtained from three sources: long-term or historical data, data collection portfolios (dcp's), and sampling and analysis programs.

DATA SOURCES

Historical Data

A useful source of long-term or historical data available for aluminum forming plants are the Discharge Monitoring Reports (DMR's) completed as a part of the National Pollutant Discharge Elimination System (NPDES). All applicable DMR's were obtained through the EPA regional offices and state regulatory agencies for the year 1977, the last complete year for which information was available. The DMR's present a summary of the analytical results from a series of samples taken during a given month for the pollutants designated in the plant's permit. In general, minimum, maximum, and average values, in mg/l or lbs/day, are presented for such pollutants as total suspended solids, aluminum, oil and grease, pH, copper, and zinc. The samples are collected from the plant outfall(s), which represents the discharge(s) from the plant. For facilities with wastewater treatment, the DMR's provide a measure of the performance of the treatment system. In theory, these data could then serve as a basis for characterizing treated wastewater from aluminum forming plants; however, there is no influent to treatment information and too little information on the performance of the plant at the time the samples were collected to use these data in formulating performance levels of various levels of treatment. They do serve as a set of data that can be used to verify the treatability performance levels presented in Section VII, Control and Treatment Technology (Table VII-21, p. 748).

Data Collection Portfolios

The dcp responses supplied the quantity of aluminum produced during 1977, as well as the average production rate (lb/hr), maximum production rate, and the rate at full capacity for each operation. When data were supplied, the quantity of wastewater produced by a production process and the quantity of production of that process were added to the data base. The average 1977 production rate is considered most representative for relating to

water use and raw waste characteristics, and has been used as the normalizing basis for calculations.

Data supplied by dcp responses were evaluated, and two flow-to-production ratios were calculated for each stream. The two ratios, water use and wastewater discharge flow, are differentiated by the flow value used in calculation. Water use is defined as the volume of water or other fluid (e.g., emulsions, lubricants) required for a given process per mass of aluminum product and is therefore based on the sum of recycle and make-up flows to a given process. Wastewater flow discharged after pretreatment or recycle (if these are present) is used in calculating the production normalized flow--the volume of wastewater discharged from a given process to further treatment, disposal, or discharge per mass of aluminum produced. Differences between the water use and wastewater flows associated with a given stream result from recycle, evaporation, and carryover on the product. The production values used in calculation correspond to the production normalizing parameter, PNP, assigned to each stream, as outlined in Section IV.

The production normalized flows were compiled and statistically analyzed by stream type. Where appropriate, an attempt was made to identify factors that could account for variations in water use. This information is summarized in this section. A similar analysis of factors affecting the wastewater values is presented in Sections IX, X, XI, and XII where representative BPT, BAT, NSPS, and pretreatment discharge flows are selected for use in calculating the effluent limitations.

The BPT discharge flows were also used to estimate flows at aluminum forming plants that supplied EPA with only production data. The estimated flow was then used to determine the cost of wastewater treatment at these facilities (see Section VIII).

The methods used in evaluation of wastewater data varied as dictated by the intended use of the results. For example, in Section VI the wastewater data from effluent samples are examined to select pollutants for consideration in regulating the category.

Congress directed EPA to regulate pollutant discharges based on a production normalized basis; that is, kilograms (pounds) of pollutant per metric ton (ton) of production, recognizing that the mass of pollutants discharged is proportional to the production, as discussed in Section IV. Thus, the mass loading data (kg of pollutant per kkg of production) from sampled plants were averaged to determine mass loadings typical of the different wastewater streams.

The concentration of pollutants detected in individual samples may not be representative of the wastewater stream due to differing degrees of dilution at each plant.

Sampling and Analysis Program

The sampling and analysis program discussed in this section was undertaken primarily to implement the Consent Decree and to identify pollutants of concern in the industry, with emphasis on toxic pollutants. Samples were collected at 20 aluminum forming facilities and subsequently analyzed.

This section summarizes the purpose of the sampling trips and identifies the sites sampled and parameters analyzed. It also presents an overview of sample collection, preservation, and transportation techniques. Finally, it describes the pollutant parameters quantified, the methods of analyses and laboratories used, the detectable concentration of each pollutant, and the general approach used to ensure the reliability of the analytical data produced.

Site Selection. The plants sampled were selected to be representative of the industry. Considerations included the number of operations to be represented, how well each facility represented the subcategory as indicated by available data, potential problems in meeting technology-based standards, differences in production processes used, and wastewater treatment in place.

Field Sampling. After selection of the plants to be sampled, each plant was contacted by telephone, and a letter of notification was sent to each plant as to when a visit would be expected. These inquiries led to acquisition of facility information necessary for efficient on-site sampling. The information resulted in selection of the sources of wastewater to be sampled at each plant. The sample points included, but were not limited to, untreated and treated discharges, process wastewater, and partially treated wastewater.

Sites visited for this sampling program are listed below by subcategory and letter designation:

1. Rolling with Neat Oils - Plants B, C, D, E, N, P, U, and T.

2. Rolling with Emulsions - Plants B, C, D, E, H, P, T, and U.

3. Extrusion - Plants F, G, K, L, N, R, V, and W.

4. Forging - Plants A, J, Q, R, and W.

5. Drawing with Neat Oils - Plants E, H, R, and V.

6. Drawing with Emulsions or Soaps - Plants S and W.

Sample Collection, Preservation, and Transportation. Collection, preservation, and transportation of samples were accomplished in accordance with procedures outlined in Appendix III of "Sampling and Analysis Procedures for Screening of Industrial Effluents for Priority Pollutants" (published by the Environmental Monitoring and Support Laboratory, Cincinnati, Ohio, March 1977, revised, April 1977) and in "Sampling Screening Procedure for the Measurement of Priority Pollutants" (published by the EPA Effluent Guidelines Division, Washington, D.C., October 1976). The procedures are summarized in the paragraphs that follow.

Whenever practical, all samples collected at each sampling point were taken from mid-channel at mid-depth in a turbulent, well-mixed portion of the waste stream. Periodically, the temperature and pH of each waste stream sampled were measured on-site.

Each large composite (Type 1) sample was collected in a new 11.4-liter (3-gallon), narrow-mouth glass jug that had been washed with detergent and water, rinsed with tap water, rinsed with distilled water, rinsed with methylene chloride, and air dried at room temperature in a dust-free environment.

Before collection of Type 1 samples, new Tygon® tubing was cut to minimum lengths and installed on the inlet and outlet (suction and discharge) fittings of the automatic sampler. Two liters (2.1 quarts) of blank water, known to be free of organic compounds and brought to the sampling site from the analytical laboratory, were pumped through the sampler and its attached tubing into the glass jug; the water was then distributed to cover the interior of the jug and subsequently discarded.

A blank was produced by pumping an additional 3 liters (3.2 quarts) of blank water through the sampler, distributed inside the glass jug, and poured into a 3.8-liter (1 gallon) sample bottle that had been cleaned in the same manner as the glass jug. The blank sample was sealed with a Teflon®-lined cap, labeled, and packed in ice in a plastic foam-insulated chest. This sample subsequently was analyzed to determine any contamination contributed by the automatic sampler.

During collection of each Type 1 sample, the glass jug was packed in ice in a separate plastic foam-insulated container. After the complete composite sample had been collected, it was mixed to

provide a homogeneous mixture, and two 0.95-liter (1 quart) aliquots were removed for metals analysis and placed in new labeled plastic 0.95-liter bottles which had been rinsed with distilled water. One of these 0.95-liter aliquots was sealed with a Teflon®-lined cap; placed in an iced, insulated chest to maintain it at 4°C (39°F), and shipped by air for plasma-arc metal analysis. Initially, the second sample was stabilized by the addition of 5 ml (0.2 ounce) of concentrated nitric acid, capped and iced in the same manner as the first, and shipped by air to the contractor's facility for atomic-absorption metal analysis.

Because of subsequent EPA notification that the acid pH of the stabilized sample fell outside the limits permissible under Department of Transportation regulations for air shipment, stabilization of the second sample in the field was discontinued. Instead, this sample was acid-stabilized at the analytical laboratory.

After removal of the two 0.95-liter (1 quart) metals aliquots from the composite sample, the balance of the sample in the 11.4-liter (3 gallon) glass jug was subdivided for analysis of nonvolatile organics, asbestos, conventional, and nonconventional parameters. If a portion of this 7.7-liter (2 gallon) sample was requested by an industry representative for independent analysis, a 0.95-liter (1 quart) aliquot was placed in a sample container supplied by the representative.

Sample Types 2 (cyanide) and 3 (total phenol) were stored in new bottles which had been iced and labeled, 1-liter (33.8 ounce) clear plastic bottles for Type 2, and 0.47-liter (16 ounce) amber glass for Type 3. The bottles had been cleaned by rinsing with distilled water, and the samples were preserved as described below.

To each Type 2 (cyanide) sample, sodium hydroxide was added as necessary to elevate the pH to 12 or more (as measured using pH paper). Where the presence of chlorine was suspected, the sample was tested for chlorine (which would decompose most of the cyanide) by using potassium iodide/starch paper. If the paper turned blue, ascorbic acid crystals were slowly added and dissolved until a drop of the sample produced no change in the color of the test paper. An additional 0.6 gram (0.021 ounce) of ascorbic acid was added, and the sample bottle was sealed (by a Teflon®-lined cap), labeled, iced, and shipped for analysis.

To each Type 3 (total phenol) sample, phosphoric acid was added as necessary to reduce the pH to 4 or less (as measured using pH paper). Then, 0.5 gram (0.018 ounce) of copper sulfate was added to kill bacteria, and the sample bottle was sealed (by a Teflon®-lined cap), labeled, iced, and shipped for analysis.

Each Type 4 (volatile organics) sample was stored in a new 125-ml (4.2 ounce) glass bottle that had been rinsed with tap water and distilled water, heated to 105°C (221°F) for one hour, and cooled. This method was also used to prepare the septum and lid for each bottle. Each bottle, when used, was filled to overflowing, sealed with a Teflon®-faced silicone septum (Teflon® side down) and a crimped aluminum cap, labeled, and iced. Hermetic sealing was verified by inverting and tapping the sealed container to confirm the absence of air bubbles. (If bubbles were found, the bottle was opened, a few additional drops of sample were added, and a new seal was installed.) Samples were maintained hermetically sealed and iced until analyzed.

Wastewater samples were collected in two stages: screening and verification. Ideally, the screening phase involves collection of samples from every waste stream in the category. Pollutants that were not detected during screening were not considered further in the study. Because of the tight schedule of this study, there was not time to analyze all of the samples obtained during screening before verification sampling began. Therefore, verification samples were analyzed for almost all of the toxic pollutants, as well as selected conventional and nonconventional pollutants.

Sample Analysis. Samples were sent by air to one of five laboratories: Cyrus Wm. Rice Division of NUS Corporation of Pittsburgh, Pennsylvania; ARO, Inc. of Tullahoma, Tennessee; Systems Science and Software (SSS) of San Diego, California: Spectrix of Houston, Texas; and Radian Corporation of Austin, Texas. Screening samples went to Rice; there the samples were split for metals analysis. An aliquot of each metal sample received by Rice was sent to EPA's Chicago laboratory for inductively coupled argon plasma emission spectrophotometry (ICAP) analysis; Rice retained an aliquot for atomic absorption spectrophotometry (AA). Twenty-two metals were analyzed by ICAP, and five metals were analyzed by AA, as follows:

Metals Analyzed by ICAP

Calcium	Copper
Magnesium	Iron
Sodium	Manganese
Silver	Molybdenum
Aluminum	Nickel
Boron	Lead
Barium	Tin
Beryllium	Titanium
Cadmium	Vanadium
Cobalt	Ytrium
Chromium	Zinc

Metals Analyzed by AA

Antimony
Arsenic
Selenium
Thallium
Mercury

Many of the metals analyzed by ICAP are not classified as pollutants and are not reported in this document as pollutants. They are considered only because they consume lime and increase sludge production in wastewater treatment facilities.

Verification samples went to Radian or ARO when metal analysis was performed by AA. Since metals analysis of screening samples was complete before verification metals analysis began, Radian analyzed the samples only for metals shown to be significant in the aluminum forming category or those expected to consume large amounts of lime.

Some verification samples were sent to System, Science and Software (SSS), Spectrix, Radian, or Rice, where analysis for the organic toxic pollutants was done.

Due to their very similar physical and chemical properties, it is extremely difficult to separate the seven polychlorinated biphenyls (pollutants 106 to 112) for analytical identification and quantification. For that reason, the concentrations of the polychlorinated biphenyls are reported by the analytical laboratory in two groups: one group consists of PCB-1242, PCB-1254, and PCB-1221; the other group consists of PCB-1232, PCB-1248, PCB-1260, and PCB-1016. For convenience, the first group will be referred to as PCB-1254 and the second as PCB-1248.

The samples were not analyzed for Pollutant 129, 2,3,7,8-tetrachlorodibenzo-p-dioxin (TCDD) because no authentic reference sample was available to the analytical laboratory.

Past studies by EPA and others have identified many nontoxic pollutant parameters useful in characterizing industrial wastewaters and in evaluating treatment process removal efficiencies. Some of these pollutants may also be selected as reliable indicators of the presence of specific toxic pollutants. For these reasons, a number of nontoxic pollutants were also studied for the aluminum forming category. These additional pollutants may be divided into two general groups:

Conventional	Nonconventional
total suspended solids (TSS)	chemical oxygen demand (COD)
oil and grease	phenols (total)
pH	total organic carbon (TOC)
	total dissolved solids (TDS)

Congress has defined the following criteria for the selection of conventional pollutants:

(1) Generally those pollutants which are naturally occurring, biodegradable, oxygen demanding materials, and solids which have characteristics similar to naturally occurring biodegradable substances; or,

(2) Include those classes of pollutants which traditionally have been the primary focus of wastewater control.

In addition, aluminum, calcium, magnesium, alkalinity, total dissolved solids, and sulfate were measured to provide data to evaluate the cost of lime and settle treatment of certain wastewater streams.

The analytical quantification levels used in evaluation of the sampling data reflect the accuracy of the analytical methods employed. Below these concentrations, the identification of the individual compounds is possible, but quantification is difficult. Pesticides and PCB's can be analytically quantified at concentrations above 0.005 mg/l, and other organic toxic levels above 0.010 mg/l levels associated with toxic metals are as follows: 0.100 mg/l for antimony; 0.10 mg/l for arsenic; 1×10^7 fibers/l for asbestos; 0.010 mg/l for beryllium; 0.002 mg/l for cadmium; 0.005 mg/l for chromium; 0.009 mg/l for copper; 0.100 mg/l for cyanide; 0.02 mg/l for lead; 0.0001 mg/l for mercury; 0.005 mg/l for nickel; 0.010 mg/l for selenium; 0.020 mg/l for silver; 0.100 mg/l for thallium; and 0.050 mg/l for zinc.

These detection limits are not the same as published detection limits for these pollutants by the same analytical methods. The detection limits used were reported with the analytical data and hence are the appropriate limits to apply to the data. Detection limit variation can occur as a result of a number of laboratory-specific, equipment-specific, and daily operator-specific factors. These factors can include day-to-day differences in machine calibration, variation in stock solutions, and variation in operators.

Quality Control. Quality control measures used in performing all analyses conducted for this program complied with the guidelines given in "Handbook for Analytical Quality Control in Water and Wastewater Laboratories" (published by EPA Environmental Monitoring and Support Laboratory, Cincinnati, Ohio, 1976). As part of the daily quality control program, blanks (including sealed samples of blank water carried to each sampling site and returned unopened, as well as samples of blank water used in the field), standards, and spiked samples were routinely analyzed with actual samples. As part of the overall program, all analytical instruments (such as balances, spectrophotometers, and recorders) were routinely maintained and calibrated.

The atomic-absorption spectrometer used for metal analysis was checked to see that it was operating correctly and performing within expected limits. Appropriate standards were included after at least every 10 samples. Also, approximately 15 percent of the analyses were spiked with distilled water to assure recovery of the metal of interest. Reagent blanks were analyzed for each metal, and sample values were corrected if necessary.

WATER USE AND WASTEWATER CHARACTERISTICS

To simplify the presentation of the sampling data, tables were developed that present ranges of concentrations with the number of samples in which each pollutant was found within these ranges. For each waste stream a frequency of occurrance table is presented for all 129 toxic pollutants. For those pollutants detected above analytically quantifiable concentrations in any sample of that wastewater stream, the actual analytical data is presented in a second table. Where no data is listed for a specific day of sampling, it indicates that the wastewater samples for the stream were not collected.

The statistical analysis of data includes some samples measured at levels considered not quantifiable. The base neutrals, acid fraction, and volatile organics are considered not quantifiable at concentrations equal to or less than 0.010 mg/l. Below this level, organic analytical results are not quantitatively accurate; however, the analyses are useful to indicate the presence of a particular pollutant. Nonquantifiable results are designated in the tables with an asterisk (double asterisk for pesticides).

When calculating averages from the organic sample data, nonquantifiable results were assumed to be zero. Organics data reported as not detected (ND) are not averaged. For example, three samples reported as ND, *, 0.021 mg/l would average as 0.010 mg/l.

In the following discussion, water use and field sampling data are presented for each core operation by subcategory. Discussions of the water use and discharge rates and field sampling data for the ancillary operations follows thereafter. Appropriate tubing or background blank and source water concentrations are presented with the summaries of the sampling data. Figures V-1 through V-20 show the location of wastewater sampling sites at each facility. The method by which each sample was collected is indicated by number, as follows:

1 one-time grab
2 24-hour manual composite
3 24-hour automatic composite
4 48-hour manual composite
5 48-hour automatic composite
6 72-hour manual composite
7 72-hour automatic composite

CORE OPERATIONS ASSOCIATED WITH MAJOR FORMING PROCESSES

Rolling

Rolling with Neat Oils Spent Lubricant. As described in Section III, the cold rolling of aluminum products typically requires the use of mineral oil or kerosene-based lubricants. The oils are usually recycled with in-line filtration and periodically disposed of by sale to an oil reclaimer or by incineration. Because discharge of this stream is not practiced, limited flow data were available for analysis. Of the 50 plants surveyed that use neat oil rolling lubricants, water (oil) use could be calculated for only four. These data are presented and summarized in Table V-1. None of the plants provided sufficient flow data to calculate the degree of recycle practiced or the discharge flow of this stream.

Toxic pollutant frequency occurence data are presented in Table V-2. Wastewater sampling data for neat oil lubricants are presented in Table V-3.

Rolling with Emulsions Spent Emulsion. Of the plants surveyed, 29 rolling operations were identified that use oil-in-water emulsions as coolants and lubricants. Rolling emulsions are typically recycled using in-line filtration treatment. Several plants discharge a bleed stream, but periodic discharge of the recycled emulsion is more commonly practiced.

Water use, wastewater factors, and percent recyle corresponding to this stream are summarized in Table V-4.

Toxic pollutant frequency occurrence data are presented in Table V-5. Table V-6 summarizes the field sampling data for toxic and

selected conventional and nonconventional pollutants. This stream is characterized by high levels of COD (79.8 to 1,520,000 mg/l), TOC (38.0 to 560,000 mg/l), and phenolic compounds as measured by total phenolics-4AAP (0.210 to 49.0 mg/l). Several toxic organic pollutants were detected in the spent emulsions at significant concentrations. These included several of the polynuclear aromatic hydrocarbons (PAH) and polychlorinated biphenyls (PCBs).

Roll Grinding Spent Emulsion. The steel rolls used in rolling operations require periodic machining to remove aluminum buildup and surface imperfections. In responding to the dcp's, most plants did not interpret the scope of aluminum forming processes to include roll grinding. For this reason, a number of plants were contacted by telephone to supplement the dcp responses. Although the survey for this stream is not as complete as for the other aluminum forming processes, it provided a basis for the analysis of water use and wastewater rates typically associated with roll grinding. This information is summarized in Table V-7, along with the degree of recycle or disposal mode practiced at those plants.

A roll grinding operation was sampled at one facility. This sample was not from an emulsified stream. Due to the nature of the roll grinding operation, it is assumed that the wastewater characteristics of the resultant spent emulsions are similar to those of the rolling with emulsions spent emulsion waste stream. Toxic pollutant frequency occurrence data for the nonemulsified stream are presented in Table V-8. The field sampling data are summarized in Table V-9. This waste stream is characterized by high levels of oil and grease (107 mg/l), suspended solids (118 mg/l), and COD (230 mg/l). Only one of the toxic organic pollutants, acrolein, was detected (0.05 mg/l).

Extrusion

Extrusion Die Cleaning Bath. As discussed in Section III (p. 91), the steel dies used in extrusion require frequent dressing to ensure the necessary dimensional precision and surface quality of the product. The aluminum that has adhered to the die orifice is typically removed by soaking the die in a caustic solution. A few plants indicated that mechanical brushing could be used to clean very simple dies, but caustic cleaning is a much more common practice. As with roll grinding, it was necessary to supplement the survey of die cleaning operations with telephone calls to several plants. Of the 163 extrusion plants, 37 are known to have die cleaning facilities. Water use and wastewater values corresponding to the die cleaning caustic bath were

calculated for plants for which information was available. This information is presented and statistically summarized in Table V-10.

Although recycle of the caustic solution, as such, is never practiced, periodic discharge of these stagnant baths is common. For this reason, water use (make-up rate) and wastewater (discharge rates) are normally identical. Variations in the water use in caustic die cleaning baths may result from the following:

- Intricacy and size of the die orifice.
- Aluminum alloy being extruded.
- Concentration of caustic used.
- Individual plant practices.

Sufficient information is not available, however, to analyze the effect of these factors.

Wastewater samples were not collected from extrusion die cleaning baths during the sampling program. Due to the nature of the extrusion die cleaning operation, it is assumed that the wastewater characteristics of this stream are similar to discharges from cleaning or etching baths. Untreated wastewater data for cleaning and etching baths are summarized in Tables V-50 and V-51.

Extrusion Die Cleaning Rinse. After caustic treatment, the extrusion dies are rinsed with water. At some plants, the dies are simply hosed off; at others, a rinse tank is used for this purpose. Most of the plants contacted indicated that rinsing was required to avoid damage to the die and the material being extruded. Water use and wastewater factors could be calculated for only nine of the thirty plants. This information is presented and summarized in Table V-11. As can be seen, water use is small and recycle, as such, is not practiced. Water use does not appear to be affected by differences in rinsing method (i.e., hose or rinse tank). Other factors, such as the intricacy of the dies, concentration of caustic used, aluminum alloy being extruded, and individual plant practices, could account for variations in water use. Sufficient data were not available to determine the degree of influence of these factors.

Toxic pollutant frequency occurrence data are presented in Table V-12. Table V-13 summarizes the field sampling data for toxic and selected conventional and nonconventional pollutants detected above the analytically quantifiable levels. This waste stream is characterized by high concentrations of aluminum (9.41 to 400 mg/l), dissolved solids (3,230 to 7,200 mg/l), and low concentrations of suspended solids (28 to 120 mg/l) and oil and grease (<2.9 to 8 mg/l). Only five of the toxic organic pollutants were detected during sampling.

Extrusion Die Cleaning Scrubber Liquor. Of the plants surveyed, two indicated the use of wet scrubbers associated with their die cleaning operations. As with the other die cleaning streams, however, this survey may not accurately represent the total number of plants with this waste stream. Wet scrubbers may be required to treat fumes from the caustic die cleaning operation in order to control air pollution emissions and ensure a safe working environment. Water use and wastewater factors are calculated in Table V-14. Toxic pollutant frequency occurrence data are presented in Table V-15. Table V-16 summarizes the field sampling data for toxic and selected conventional and nonconventional pollutants detected above the analytically quantifiable levels. This waste stream is characterized by relatively high levels of oil and grease (57.6 mg/l) and dissolved solids (330 mg/l). The toxic metals, when detected, were present at levels well below their treatability levels.

Extrusion Press Scrubber Liquor. Of the 163 extrusion plants surveyed, two plants reported the use of wet scrubbers at the extrusion presses to remove caustic fumes. These fumes occur as a result of cleaning aluminum from extrusion presses between operations.

One of these plants reported sufficient data for the calculation of wastewater values. The scrubber at this plant runs continuously without recycle and has water use and wastewater values of 2,071 l/kkg. The other plant, while not supplying enough information to allow calculation of these values, reported that their scrubber is only run intermittently. These data appear in Table V-17. This waste stream was sampled at only one plant. Toxic pollutant frequency occurrence data are presented in Table V-18. The field sampling data are summarized in Table V-19. As can be seen in the table, this stream is characterized by low levels of suspended solids (5 mg/l) and elevated levels of dissolved solids (357 mg/l). All of the toxic metals were detected well below their treatability levels.

Extrusion Dummy Block Contact Cooling Water. As described in Section III (p. 90), a dummy block is placed between the ram and ingot during the direct extrusion process. After the extrusion is complete, the ingot butt and dummy block are released from the press. Typically, the dummy blocks are allowed to air cool; however, of the 163 extrusion plants, three indicated that water was used for this purpose. As can be seen in Table V-20, none of these plants recycle the cooling water. Data were available to calculate water use and wastewater discharge rates for two of the three plants.

Toxic pollutant frequency occurrence data are presented in Table V-21. Data from wastewater sampling of dummy block cooling water are presented in Table V-22. This waste stream is characterized by elevated concentrations of oil and grease (74 mg/l) and dissolved solids (50 mg/l). Only one toxic organic pollutant (chloroform) was detected (0.08 mg/l). None of the toxic metals were detected.

Forging

There are no core waste streams that are unique to the forging operation.

Drawing

Drawing with Neat Oils Spent Lubricant. Of the 277 plants surveyed, 66 draw aluminum products using neat oil lubricants. Two plants avoid discharge of this stream by 100 percent recycle of the drawing oil. Most of the plants dispose of the spent oil by incineration or contractor hauling and did not provide the flow data required to calculate water (oil) use and wastewater discharge (oil) values. Table V-23 shows the water use and wastewater values for the plants that supplied sufficient information for the calculation of these values.

No wastewater samples were collected from neat oils for drawing.

Drawing with Emulsions or Soaps Spent Emulsion. Of the plants surveyed, nine draw aluminum products using oil-in-water emulsions, and four indicated that soap solutions were used as drawing lubricants. Water use and wastewater factors calculated for this stream are presented and summarized in Table V-24. As can be seen, the solutions are frequently recycled and discharged periodically after their lubricating properties are exhausted. Wastewater discharge factors were calculated for seven of the 13 plants. As shown in Table V-24, the wastewater discharge rates associated with these plants vary considerably. Analysis of the data has shown that this variation is related to differences in the dimension of wire being drawn. The amount of lubricant required for drawing a given length of wire is roughly the same for fine and coarse wire. Since the weight of finer wire is less, the corresponding production figures will be lower. As a result, the wastewater factors calculated as flow per unit production will be higher for lubricants used in fine wire drawing than in drawing of coarse wire.

Toxic pollutant frequency occurrence data are presented in Table V-25. Table V-26 summarizes the field sampling data for the toxic and selected conventional and nonconventional pollutants detected above analytically quantifiable levels. This waste

stream is characterized by extremely high levels of oil and grease (51,500 mg/l) and the presence of certain toxic organic pollutants.

Swaging. Swaging is frequently associated with drawing operations and has been included in the Drawing with Neat Oils Subcategory. Swaging is used as an initial step in drawing with tube or wire. By repeated blows of one or more pairs of opposing dies, a solid point is formed. This can then be inserted through the die and gripped for drawing. In a few cases, swaging is used in tube forming without a subsequent drawing operation. Some lubricants, such as waxes and kerosene, may be used to prevent adhesion of metal or oxide on the dies. Discharge of swaging lubricants was not reported by any of the plants surveyed in this study.

CORE OPERATIONS NOT ASSOCIATED WITH SPECIFIC MAJOR FORMING PROCESSES

Sawing Spent Lubricant. Although sawing is associated with nearly all aluminum forming operations, only 12 of the plants surveyed reported the use of saw oil emulsions. Because plants frequently failed to mention minor streams that are not discharged, the actual number of plants using saw lubricants is probably much higher. The lubricants are frequently recycled and, in most instances, discharge from the system is limited to carryover and disposal by contractor hauling. Only three plants reported direct or indirect discharge of saw oils.

Water use and wastewater factors were calculated for plants providing flow and production data corresponding to the stream. These factors are shown and summarized in Table V-27.

Field samples of sawing spent lubricant were not collected. Due to the nature of the lubricants used in the sawing operation, it is assumed that the wastewater characteristics of this waste stream are similar to those of the rolling with emulsions spent emulsion waste stream. These data are presented in Tables V-5 and V-6.

Degreasing Spent Solvents. Although 34 solvent degreasing operations have been identified from dcp responses, no discharge is typically associated with this process, and little flow data were provided. Vapor degreasing, the predominant method of solvent cleaning in the aluminum forming industry, is described in Section III (p. 103). A number of toxic organic pollutants, including trichloroethylene, 1,1,1-trichloroethane, and perchloroethylene, are commonly used solvents for vapor degreasing. The solvents are frequently reclaimed by distillation, either on-site or by an outside recovery service.

Toxic pollutant frequency occurrence data are presented in Table V-28. Field sampling data for cleaning solvent streams are summarized in Table V-29. Besides the presence of volatile organic pollutants mentioned above, this waste stream is characterized by high levels of oil and grease (2,180 mg/l), COD (330 mg/l), and TOC (143 mg/l).

Annealing Atmosphere Scrubber Liquor. As described in Section III (p. 100), annealing is used to soften work-hardened and solution-heat-treated alloys, to relieve stress, and to stabilize the properties and dimensions of the aluminum product. In some cases, it is necessary to control the atmosphere within the annealing furnace. At elevated temperatures, the presence of water vapors can disrupt the oxide film on the surface of the product, especially if the atmosphere is also contaminated with ammonia or sulfur compounds. Inert gas atmospheres can be used within the furnace to avoid possible detrimental effects, such as blistering, discoloration, and a decrease in tensile properties. At some plants, natural gas is burned to generate an inert atmosphere. At one of the aluminum forming plants surveyed, flue gases from the burning of fuel to heat the annealing furnace are used as the furnace atmosphere. Due to the sulfur content of furnace fuels; however, the off gases require treatment by wet scrubbers before they can be used as an inert atmosphere for heat treatment. The scrubber in use at this plant was reported to require a relatively large flow of water which is extensively recycled (more than 99 percent). The water use and wastewater values calculated for this stream are shown in Table V-30.

Toxic pollutant frequency occurrence data are presented in Table V-31. Table V-32 summarizes the field sampling data for those pollutants detected above analytically quantifiable levels. This waste stream is characterized by high levels of sulfates if the furnace fuel has a high sulfur content.

ANCILLARY OPERATIONS

Heat Treatment

Solution and Press Heat Treatment Contact Cooling Water. Heat treatment of aluminum products frequently involves the use of a water quench in order to achieve desired metallic properties. At the 277 aluminum forming plants surveyed, 88 solution heat treatment processes were identified that involve water quenching.

The field samples from heat treatment quenching processes have been identified and compiled according to the aluminum forming operation that it follows (i.e., rolling, forging, drawing, and extrusion). Additional differentiation was made between press and solution heat treatment of extrusions. The wastewater streams and the tables which list the water use, percent recycle,

wastwater values, frequency of occurrence of toxic pollutants, and sampling data for toxic and conventional and nonconventional pollutants are listed below:

Wastewater Stream	Water Use, Percent Recycle, Wastewater Values	Toxic Pollutant Frequency of Occurrence	Field Sampling Data
Rolling Solution Heat Treatment Contact Cooling Water	Table V-33	Table V-34	Table V-35
Extrusion Press Heat Treatment Contact Cooling Water	Table V-36	Table V-37	Table V-38
Extrusion Solution Heat Treatment Contact Cooling Water	Table V-39	Table V-40	Table V-41
Forging Solution Heat Treatment Contact Cooling Water	Table V-42	Table V-43	Table V-44
Drawing Solution Heat Treatment Contact Cooling Water	Table V-45	Table V-46	Table V-47

The water use factors calculated for this stream were analyzed to determine if a relationship exists between water use requirements and the type of products being quenched (extrusions, forgings, etc.) or the method of heat treatment used (e.g., press versus solution heat treatment of extrusions). It was determined that neither of these factors account for the variations in water use. Heat treatment water requirements are independent of the major forming process which precedes the heat treatment operation. The water requirements are a function of several variables, including the mass and surface area of the aluminum, the time allowed for cooling, and the temperature gradient.

Since the water use requirements are independent of the major forming process which precedes the operation, it is assumed that the pollutant loadings in the discharged wastewater are also independent and will be similar for the various heat treatment operations. For regulatory purposes the wastewater discharge values for all the heat treatment operations will be combined into a single value for all solution and press heat treatment operations.

Cleaning or Etching Bath. As described in Section III (p. 102), a variety of chemical solutions are used for cleaning purposes or to provide the desired finish for formed aluminum products.

These treatments and their associated rinses are usually combined in a single line of successive tanks. Wastewater discharged from these lines is typically commingled prior to treatment or discharge.

The acid, alkaline, and detergent solutions used in cleaning or etching lines are usually maintained as stagnant baths into which the products are immersed. Chemicals are added as required to make up for losses due to evaporation, carryover, and splash-out. In this survey, most of the plants with cleaning or etching lines did not indicate discharge of these chemical dips. A few plants reported periodic discharge of cleaning or etching compounds, usually following treatment. Other plants indicated that the chemical dip is hauled periodically by an outside contractor or disposed of on-site. Water use and wastewater discharge rates for this stream are presented in Table V-48.

Table V-49 presents the frequency of occurrence of toxic pollutants for this wastewater stream type. Table V-50 summarizes the field sampling data for those pollutants detected above analytically quantifiable levels. This waste stream is characterized by high levels of several of the toxic metals, copper, chromium and lead, oil and grease (7 to 100 mg/l), suspended solids (1 to 348 mg/l), aluminum (30 to 70,000 mg/l), dissolved solids (27,600 to 284,000 mg/l), and TOC (1 to 3,550 mg/l).

Cleaning or Etching Rinse. Rinsing is usually required following successive chemical treatments within cleaning or etching lines. The most common methods are spray rinsing or immersion in a continuous-flow rinse tank. The number of rinses within a given line varied from plant to plant, depending on the kind of surface treatment applied.

Water use and wastewater values calculated for the cleaning or etch lines at aluminum forming plants are shown in Table V-51. As can be seen, cleaning or etching lines with multiple rinses tend to have higher water use and wastewater discharge values. Direct correlations between these factors cannot be established on the basis of these data. A more detailed discussion of factors which could account for variations in wastewater discharge of this stream is presented in Section IX. The percent of recycled rinse water could not be calculated because of the difficulty in defining the amount of water used. This was caused by countercurrent and stagnant rinses, carryover, and other practices peculiar to the cleaning or etching lines in the aluminum forming category.

Toxic pollutant frequency occurrence data are presented in Table V-52. Table V-53 summarizes the field sampling data for those pollutants detected above analytically quantifiable levels. This waste stream, like cleaning or etching baths, is characterized by

elevated concentrations of the toxic metals, copper, chromium, and lead. In addition, nickel and zinc were present at high levels in many samples. Oil and grease and suspended solids were also present at high levels, but lower relative to the baths, as would be expected.

Cleaning or Etching Scrubber Liquor. Of the 40 plants with cleaning and etching lines, six indicated that wet scrubbers are associated with these operations. Fumes from caustic or acid baths may require treatment to control air pollution emissions and ensure a safe working environment. Sufficient flow data were available to calculate water use from two of the six plants, and wastewater values were available from three of the six plants. This information is summarized and presented in Table V-54.

Toxic pollutant frequency occurrence data are presented in Table V-55. Table V-56 summarizes the field sampling data for those pollutants detected above the analytically quantifiable levels. This waste stream is characterized by low levels of contamination, as exhibited by suspended solids at 12 mg/l.

Forging Scrubber Liquor. Of the 16 forging plants surveyed, three indicated that wet scrubbers were used to control particulates and smoke generated from the partial combustion of oil-based lubricants in the forging process. Water use and wastewater discharge rates are summarized in Table V-57.

Toxic pollutant frequency occurrence data are presented in Table V-58. Table V-59 summarizes the field sampling data for the toxic and selected conventional and nonconventional pollutants detected above the analytically quantifiable levels. This waste stream is characterized by the presence of eight toxic organic pollutants, five of which were polynuclear aromatics. The five were present at concentrations ranging from 0.018 to 0.075 mg/l. High levels of oil and grease (162 mg/l), COD (349 mg/l), and dissolved solids (388 mg/l) are also characteristic of this waste stream.

Casting

Direct Chill Casting Contact Cooling Water. Of the plants surveyed, 61 aluminum forming and 27 primary aluminum plants indicated that they cast aluminum or aluminum alloys using the direct chill method. Because the ingot or billet produced by direct chill casting is used as stock for subsequent rolling or extrusion, this wastewater stream is considered to be an ancillary stream for the Rolling with Emulsions and Extrusion Subcategories.

Contact cooling water is used in the direct chill casting method to spray the ingot or billet as it drops from the mold and then

to quench it as it is immersed in a cooling tank at the bottom of the casting pit. As described in Section III (p. 96), the cooling water may be contaminated by lubricants applied to the mold before and during the casting process. Some plants discharge this cooling water stream without recycle, but it is commonly recirculated through a cooling tower. Even with recycle, periodic discharge or the discharge of a continuous bleed stream is required to prevent the accumulation of dissolved solids. Of the 48 aluminum forming plants for which information was available, 30 recycle the contact cooling water stream used in direct chill casting. The average recycle rate at these plants was 96 percent, but the reported values ranged between 50 and 100 percent.

The calculated water use, percent recycle and wastewater values corresponding to direct chill casting cooling water streams at aluminum forming plants are presented in Table V-60, along with a statistical summary of this data. For comparative purposes, the calculated water use, percent recycle, and wastewater values for primary aluminum plants with direct chill casting operations are presented in Table V-61.

Toxic pollutant frequency occurrence data are presented in Table V-62. The field sampling data for those pollutants detected above analytically quantifiable levels are summarized in Table V-63. This waste stream is characterized by the presence of certain toxic organic pollutants at levels ranging from 0.500 mg/l to below the level of detection. It is also characterized by elevated levels of oil and grease (5 to 214 mg/l) and suspended solids (1 to 220 mg/l).

Continuous Rod Casting Contact Cooling Water. Three of the aluminum forming plants surveyed in this study use continuous casting methods to manufacture aluminum rod for subsequent drawing. Four primary aluminum plants also have continuous rod casting operations. This process, also referred to as Properzi or wheel casting, is described in Section III (p. 98). Although the cooling water associated with continuous rod casting is, for the most part, noncontact, some contact with the freshly cast aluminum bar as it leaves the ring mold is difficult to avoid. For this reason, the cooling water used in continuous rod casting operations is classified as an ancillary stream associated with the Drawing with Neat Oils and Drawing with Emulsions or Soaps Subcategories.

Water use and wastewater factors corresponding to this stream could be calculated for only one of the aluminum forming continuous rod casting plants. At this facility no recycle of the cooling water was practiced. Water use and wastewater rates could not be calculated for the other aluminum forming plant

known to recycle and periodically discharge this stream. The other plant indicated that contact cooling water was not used. This information is presented in Table V-64.

No field samples were collected of this cooling water stream. Due to the nature of the continuous rod casting operation, it is assumed that the wastewater characteristics of this stream are similar to those of the direct chill casting contact cooling water waste stream. These data are presented in Tables V-62 and V-63.

Continuous Rod Casting Spent Lubricant. As discussed in Section III (p. 98), in continuous casting operations, oil-in-water emulsions are used as lubricants. Both of the rod casting plants providing information practiced total recycle of this stream, although one aluminum forming plant indicated that periodic disposal was required. Sufficient flow and production data were not available to calculate water use or wastewater flows for this stream. Some recycle information is presented in Table V-65.

No continuous rod casting lubricant field samples were collected. Due to the nature of the lubricant used in the continuous rod casting operation, it is assumed that the wastewater characteristics of this waste stream are similar to those of the rolling with emulsions spent emulsion waste stream. These data are presented in Tables V-5 and V-6.

Continuous Sheet Casting Spent Lubricant. Of the 277 plants surveyed in the aluminum forming study, 11 cast aluminum sheet products using continuous techniques such as the Hunter or Hazelett methods. No plants in the primary aluminum industry reported casting aluminum sheet products using continuous methods. While continuous sheet or strip casting uses only noncontact cooling water, a few plants indicated that lubricants were required for the associated rolling line. Oil-in-water emulsions, graphite solutions, and aqueous solutions of magnesia can be used for this purpose. Of the plants surveyed, five reported the use of lubricants in their continuous sheet casting operations. The lubricants were always recycled and two of the plants indicated that periodic disposal of this stream was required. Water use and wastewater rates of this stream are shown for the plants in Table V-66. Other plants reported periodic disposal of the lubricant, but provided no flow data. Six additional facilities with continuous sheet casting did not indicate the use of a rolling lubricant.

No wastewater samples were collected from continuous sheet casting operations. Due to the nature of the type of lubricant used in this operation, it is assumed that the wastewater characteristics of this waste stream are similar to those of the rolling

with emulsions spent emulsion waste stream. These data are presented in Tables V-5 and V-6.

Stationary Casting. All of the 16 stationary casting facilities surveyed in the aluminum forming study indicated that contact cooling water is not associated with stationary casting. Any water used to cool the molds is strictly noncontact. Small quantities of water are sometimes sprayed onto the surface of the molten metal in stationary casting operations. Although not reported to occur in aluminum forming stationary casting operations, if contact water is used, it probably is evaporated and not discharged.

Degassing Scrubber Liquor. The purpose, variations, and limitations of metal treatment technologies are described in Section III (p. 95). While the wastewater sampling program was in progress, two of the plants visited had wet air pollution control devices cleaning the degassing fumes. Since that time, the plant that was sampled replaced the wet scrubbers with dry devices. Only one of the 80 plants with casting operations surveyed in this study continues to use wet air pollution controls in association with their metal treatment operations prior to casting. Sufficient data were not available from this plant; however, to calculate the water use or wastewater flow of this stream. There have been four plants that have gone to the alternative degassing air pollution control methods since the draft document was written. Eleven primary aluminum plants reported using wet air pollution controls in their metal treatment operations. Of these, four provided enough information to allow the calculation of water use values and five gave enough data for wastewater calculations. This information is presented in Table V-67.

Toxic pollutant frequency occurrence data are presented in Table V-68. Table V-69 summarizes the field sampling data for those pollutants detected above analytically quantifiable levels. This wastewater is characterized by slightly elevated levels of suspended solids (<38 mg/l).

Additional Wastewater Samples

Table V-70 presents the field sampling data for all raw waste samples not previously presented. Most of these samples represent combined wastewater streams (e.g., contact cooling water and noncontact cooling water) or streams not considered in the scope of this regulation.

Treated Wastewater Samples

Tables V-71 through V-82 present the field sampling data for the treated wastewater from 12 of the 20 sampled plants. These

treated wastewater data have been incorporated into the larger data base which was used to determine the treatment effectiveness for different control systems. The treatability limits selected for the aluminum forming control options are presented in Section VII (Control and Treatment Technology) (Table VII-21, p. 748).

Most of the treated wastewater streams analyzed were collected after some form of oil separation (Streams D-15, E-8, and U-3) and emulsion breaking process (Streams B-7, C-9, E-9, P-7, and U-8) (see Figures V-1 through V-20). As expected, these streams showed lower concentrations of oil and grease (<100 mg/l) than found in the influent raw waste streams. In addition, one stream (Stream B-8) was sampled after an ultrafiltration process which removes a large percentage of the oil and grease from the raw waste. Also, samples collected after settling ponds, lagoons, or clarifiers (Streams D-4, E-11, J-6, K-5, and Q-4) showed reduced levels of suspended solids. Lime and settle system effluents (Streams D-14 and K-5) had toxic metal concentrations below the detection limits for most of the toxic metals.

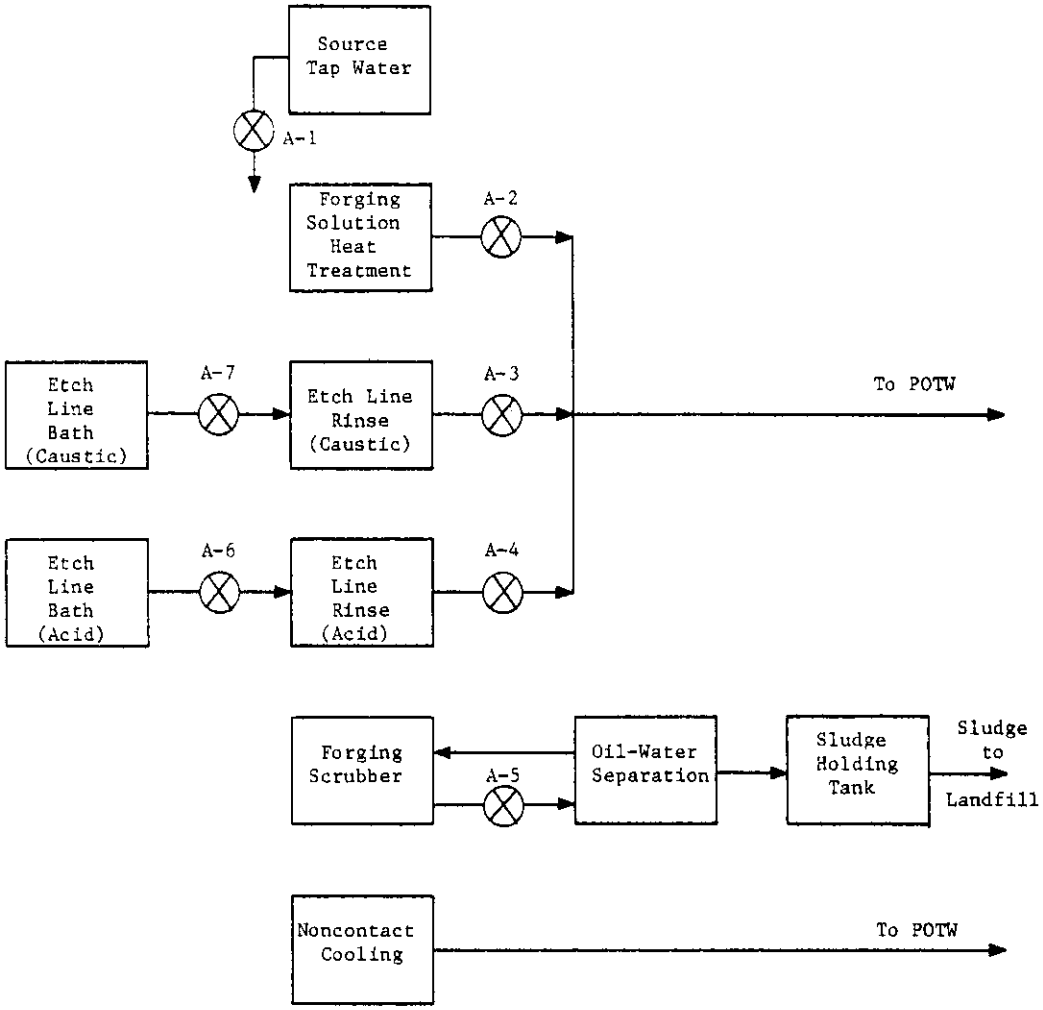

Figure V-1

WASTEWATER SOURCES AT PLANT A

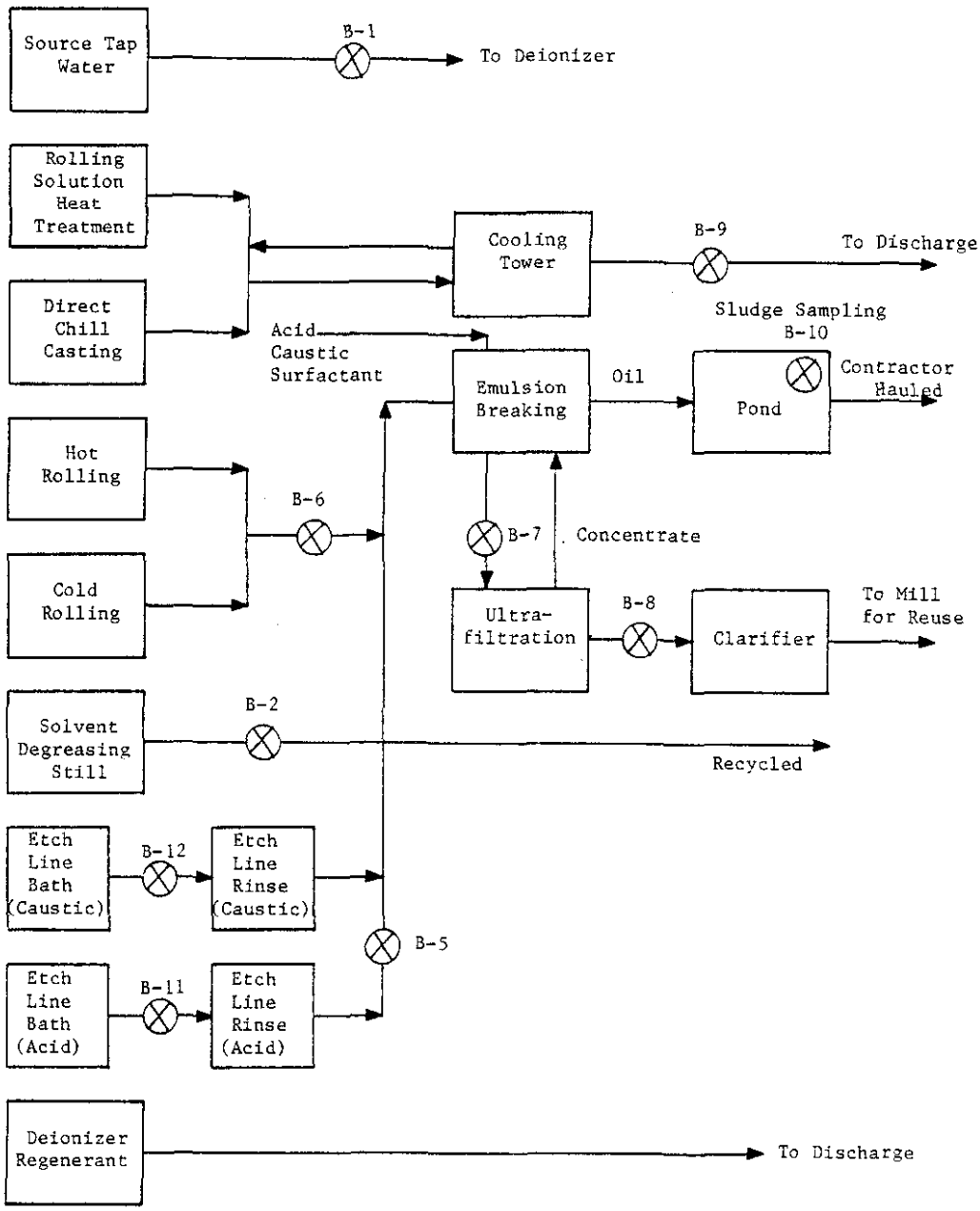

Figure V-2

WASTEWATER SOURCES AT PLANT B

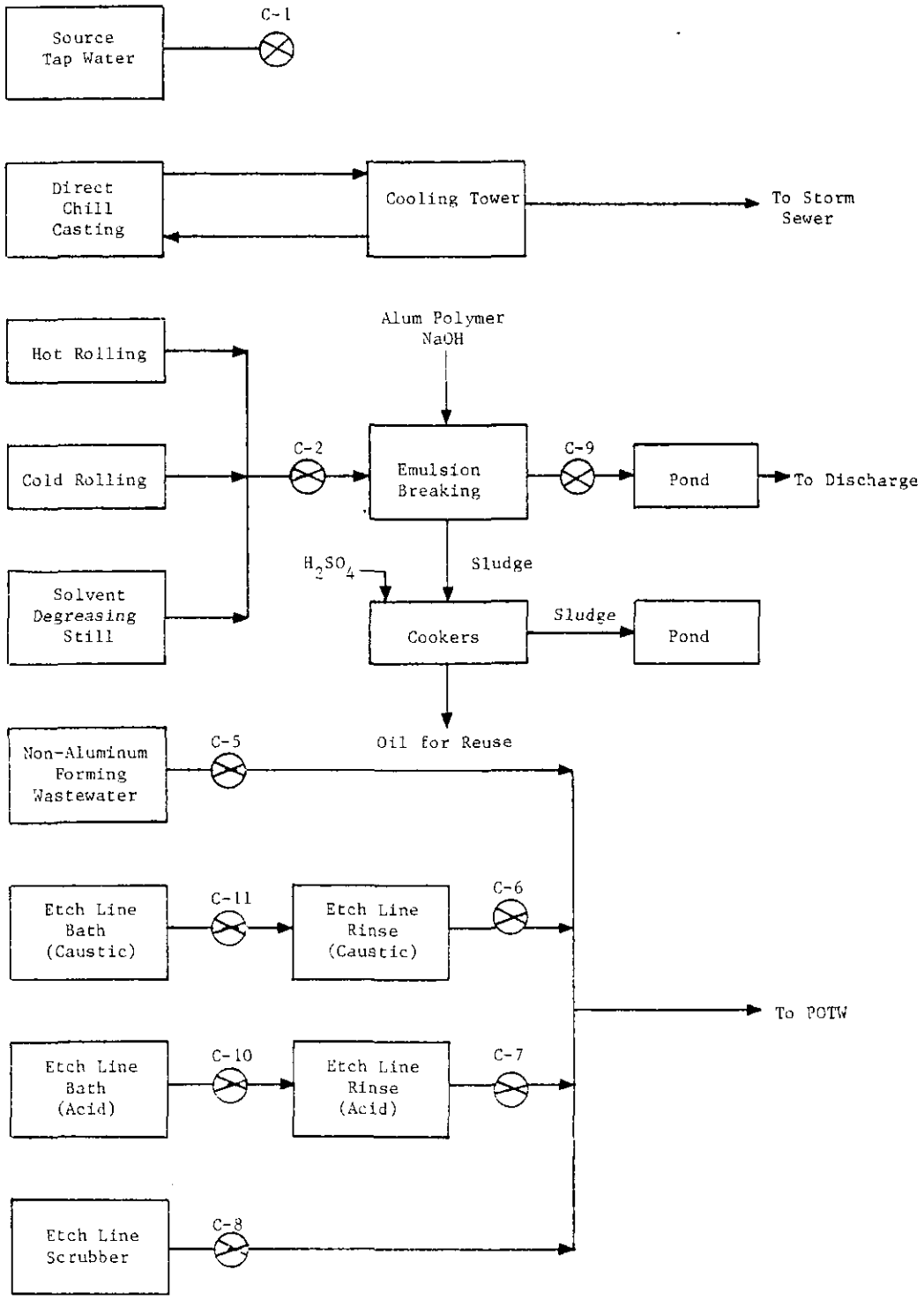

Figure V-3

WASTEWATER SOURCES AT PLANT C

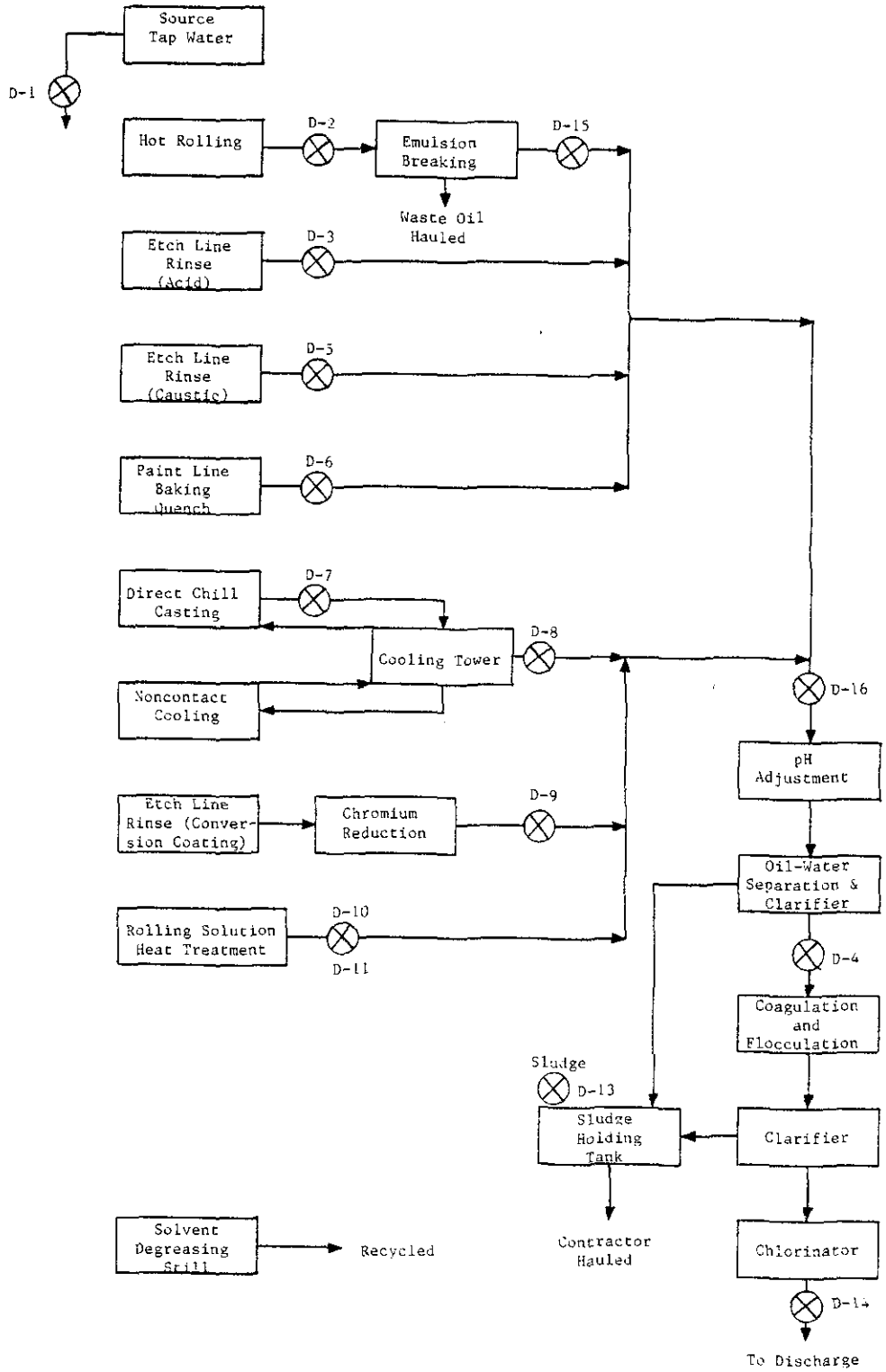

Figure V-4

WASTEWATER SOURCES AT PLANT D

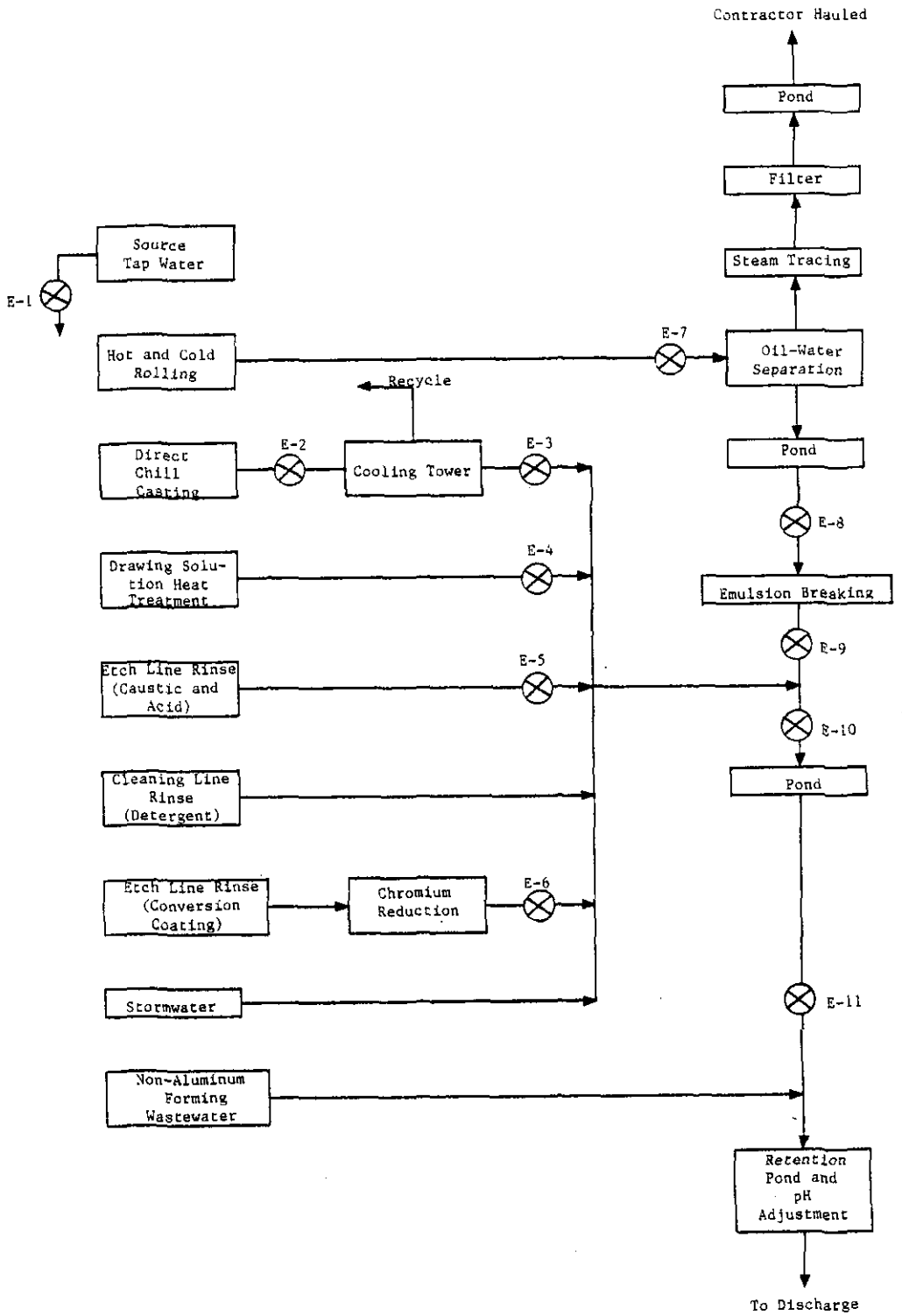

Figure V-5

WASTEWATER SOURCES AT PLANT E

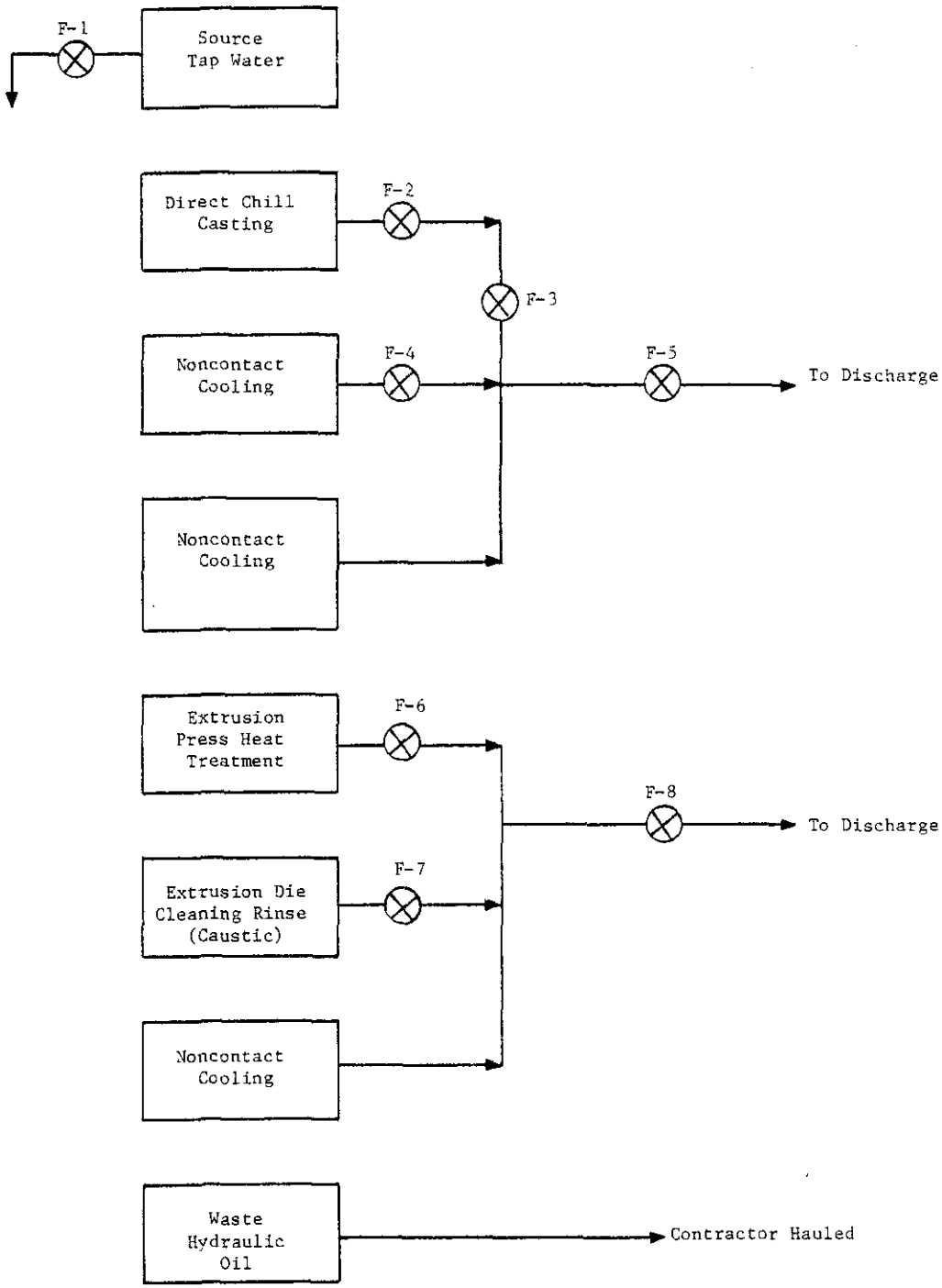

Figure V-6

WASTEWATER SOURCES AT PLANT F

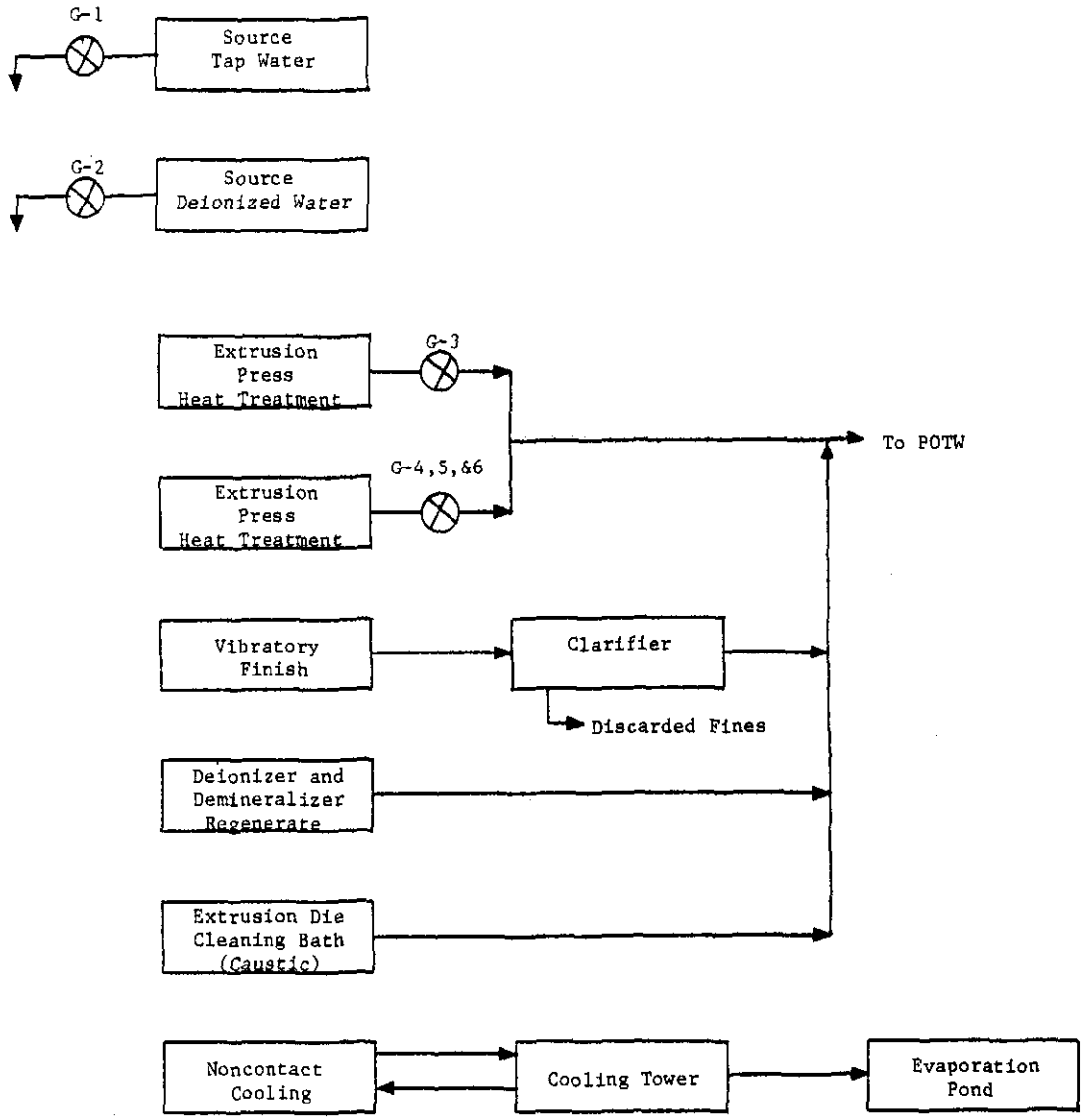

Figure V-7

WASTEWATER SOURCES AT PLANT G

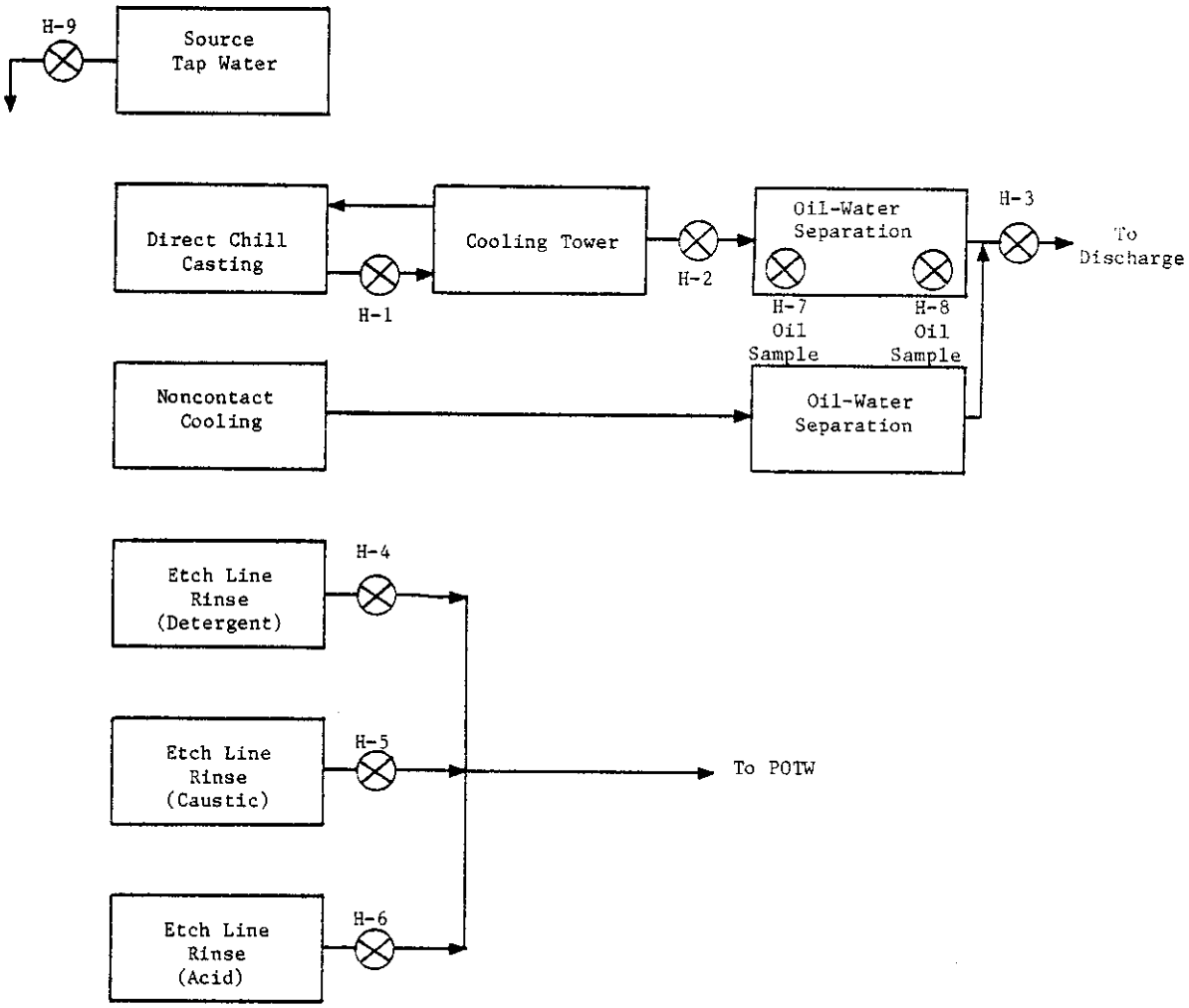

Figure V-8

WASTEWATER SOURCES AT PLANT H

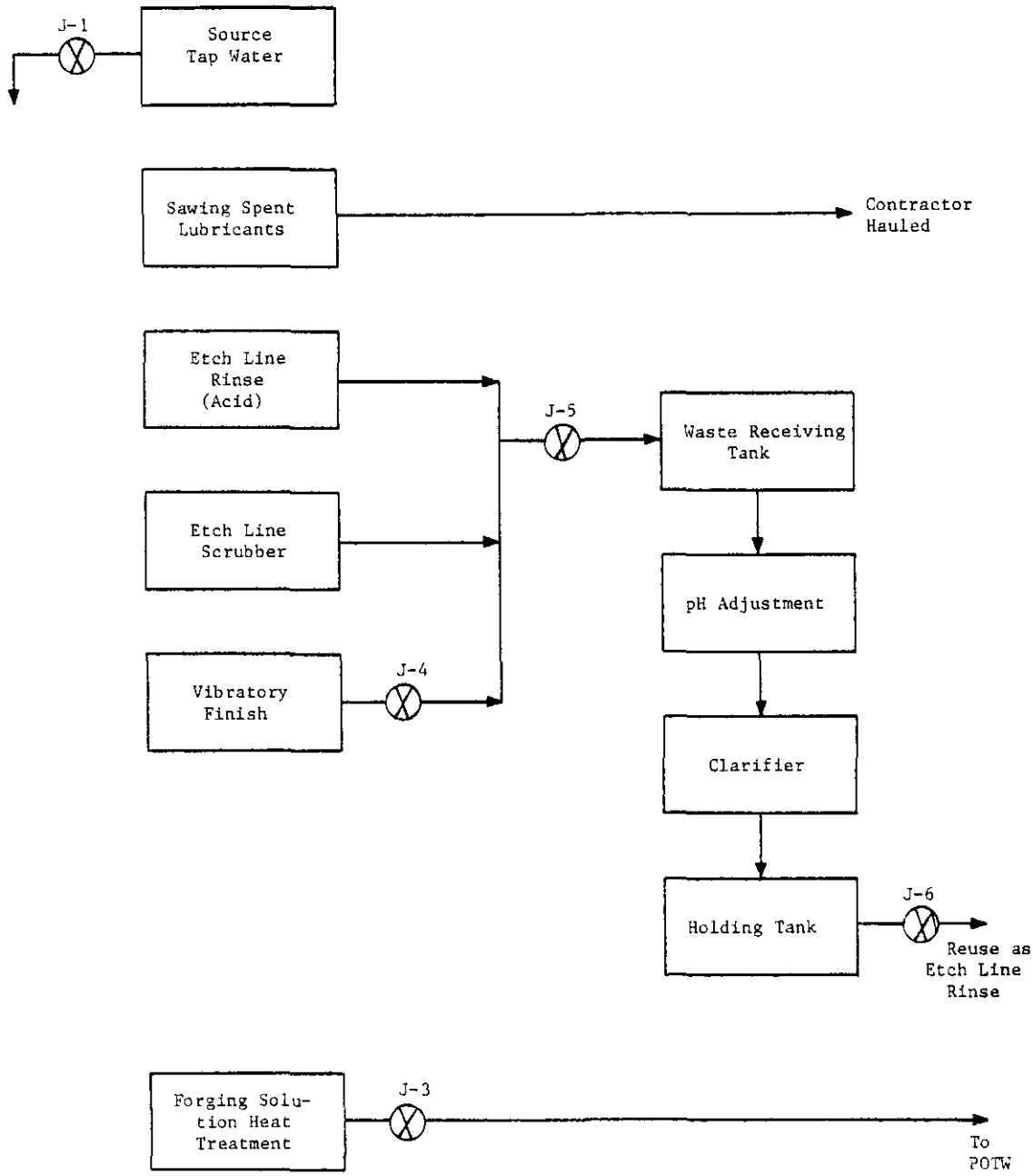

Figure V-9

WASTEWATER SOURCES AT PLANT J

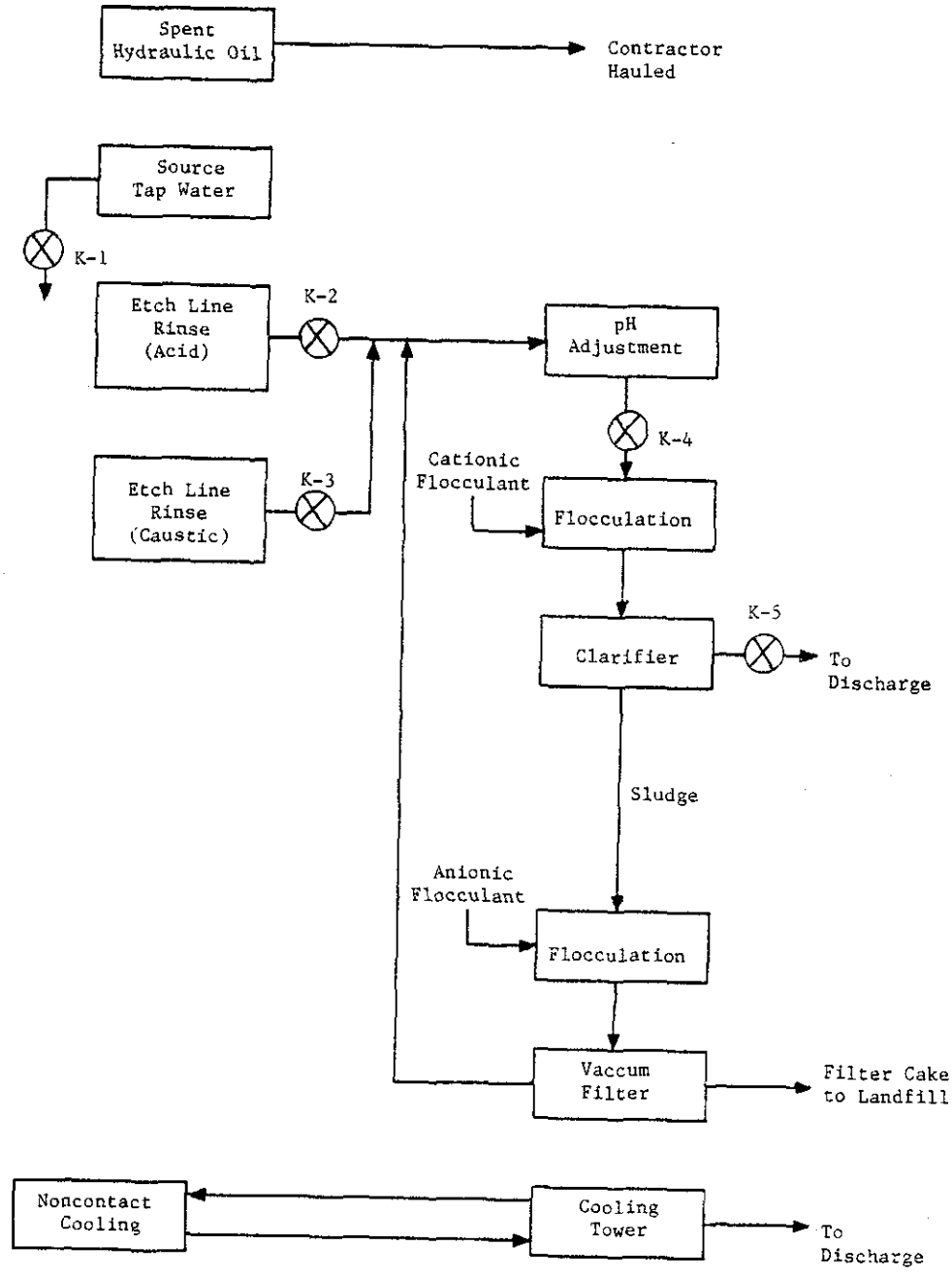

Figure V-10

WASTEWATER SOURCES AT PLANT K

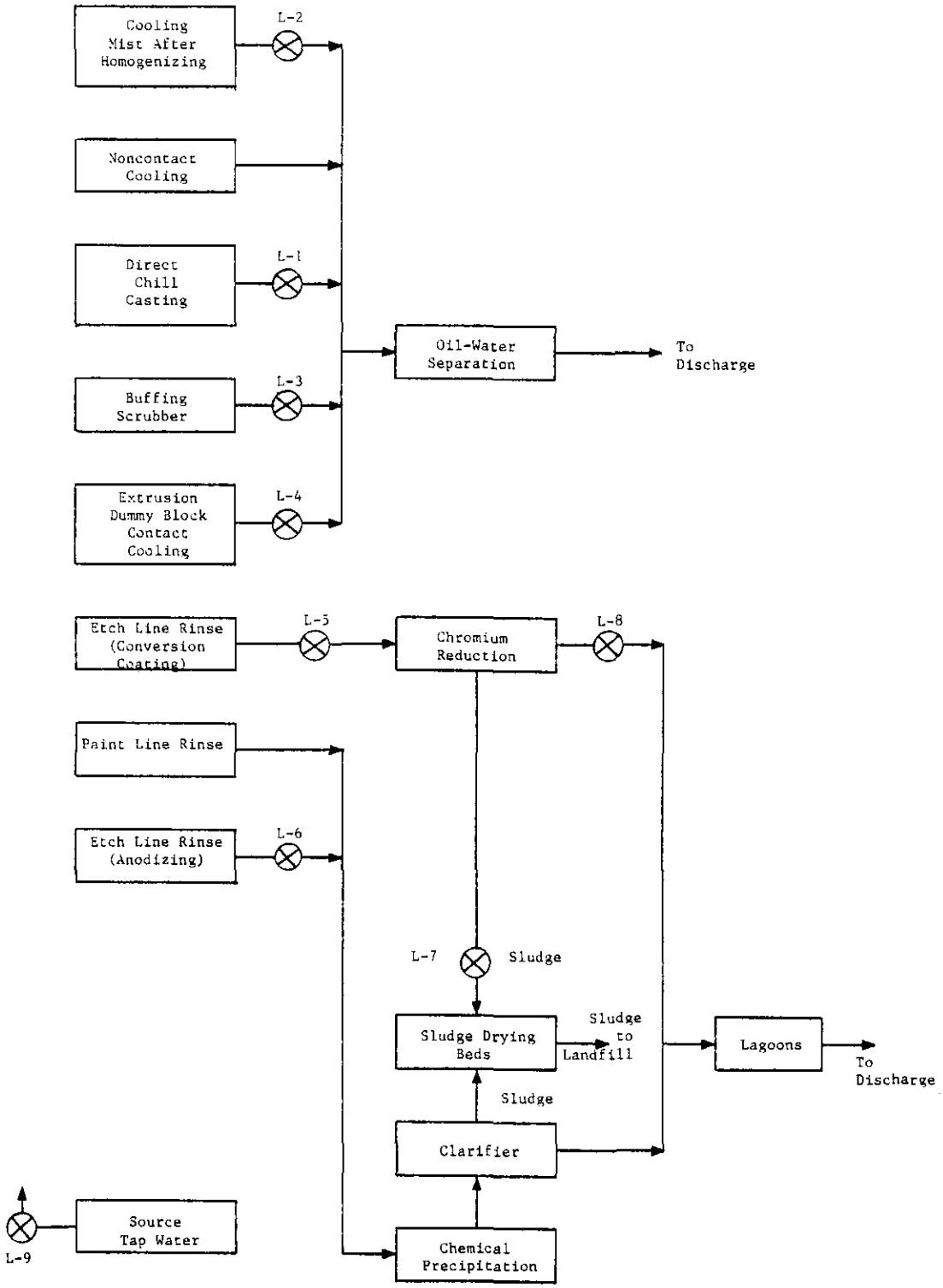

Figure V-11

WASTEWATER SOURCES AT PLANT L

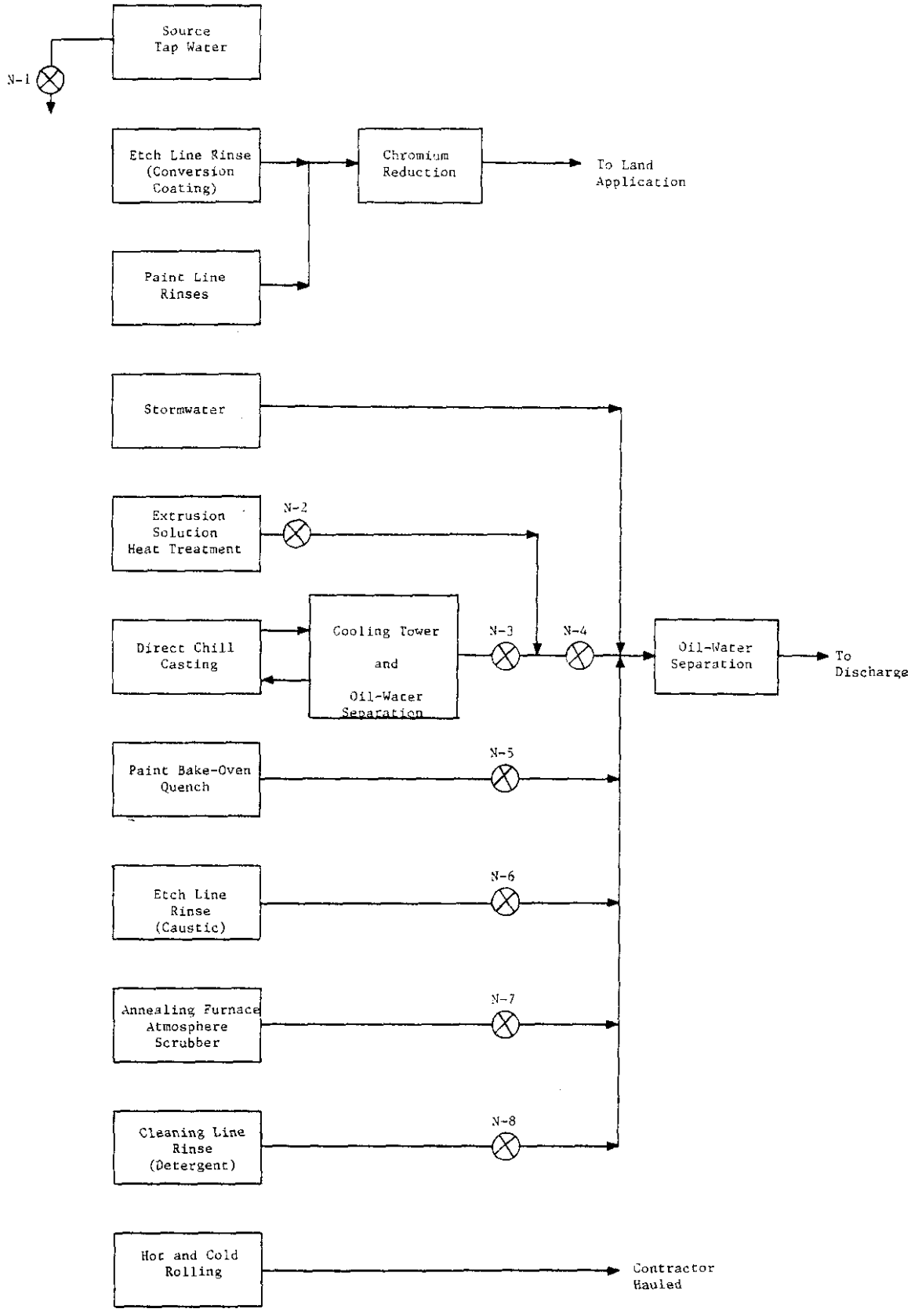

Figure V-12

WASTEWATER SOURCES AT PLANT N

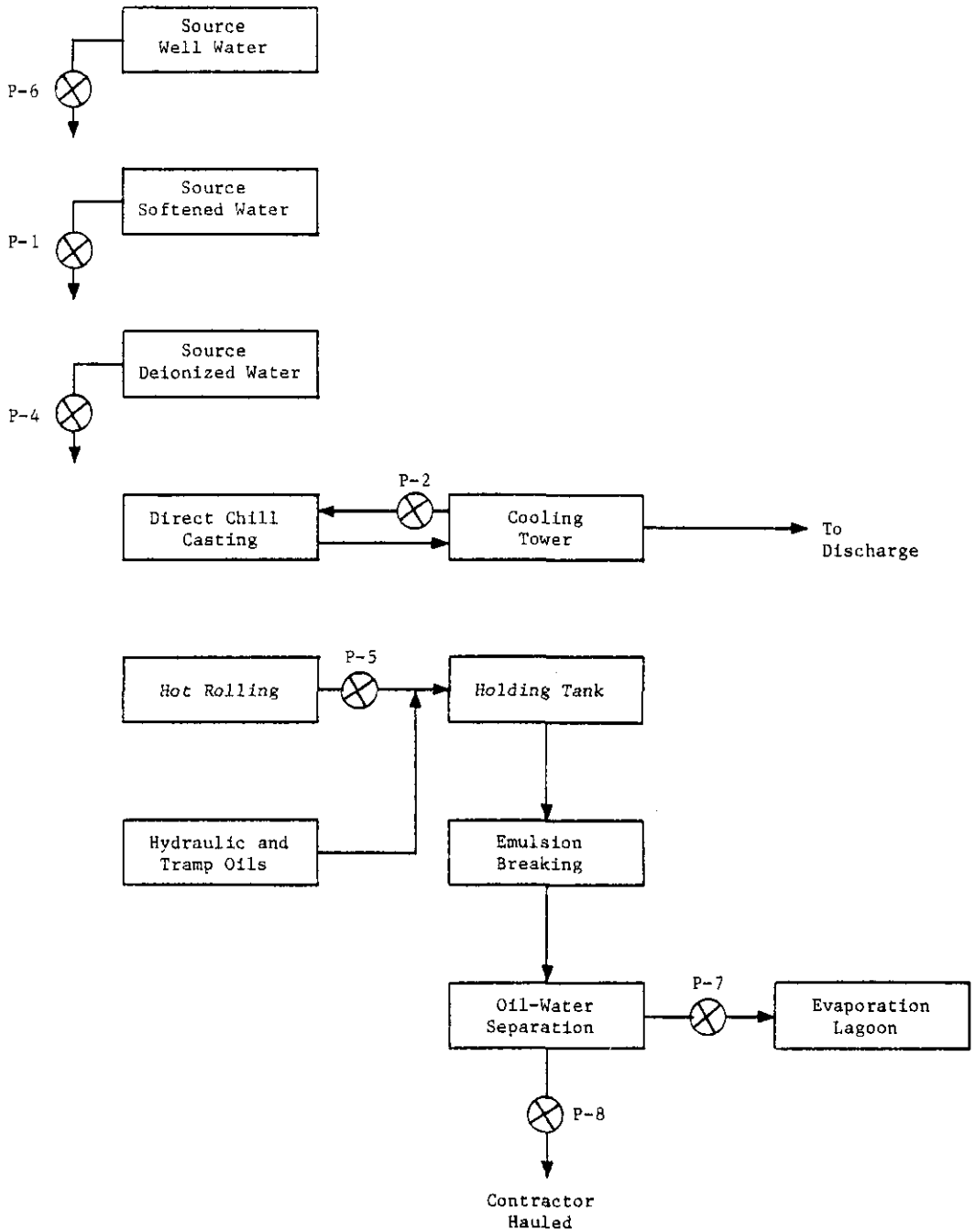

Figure V-13

WASTEWATER SOURCES AT PLANT P

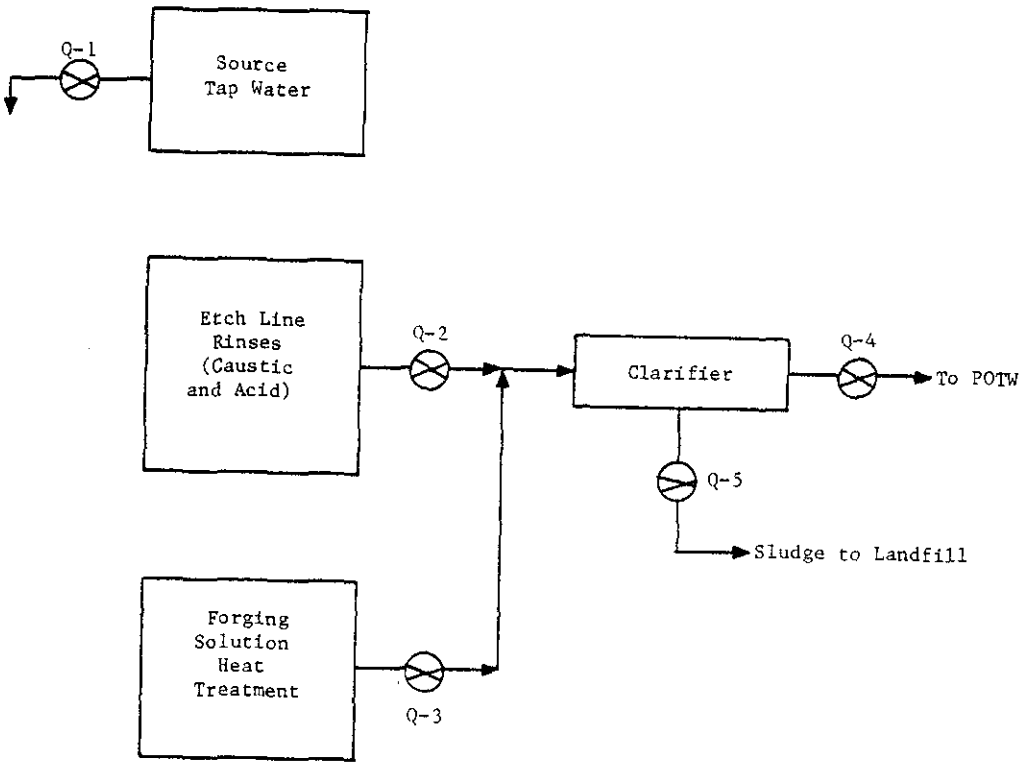

Figure V-14

WASTEWATER SOURCES AT PLANT Q

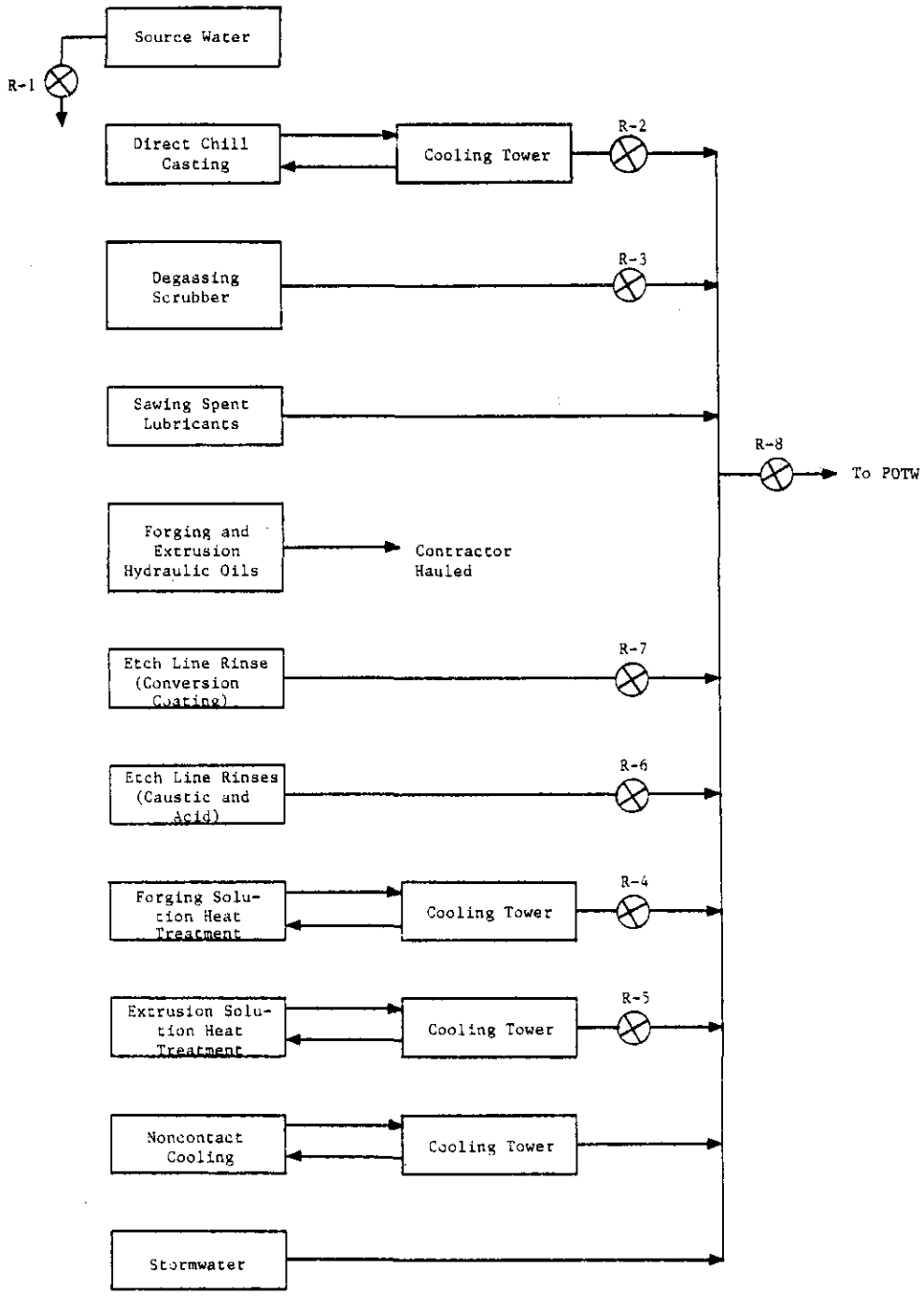

Figure V-15

WASTEWATER SOURCES AT PLANT R

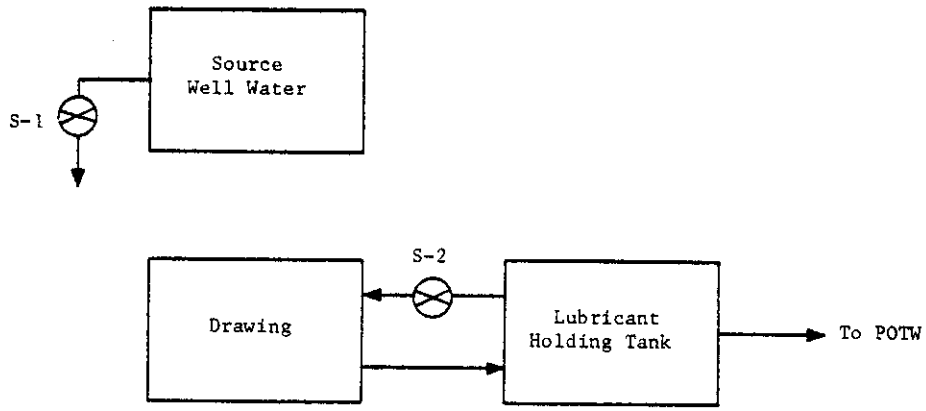

Figure V-16

WASTEWATER SOURCES AT PLANT S

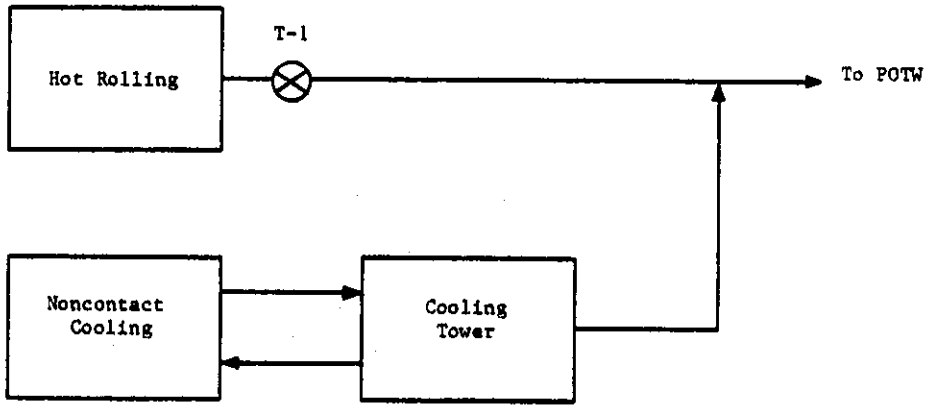

Figure V-17

WASTEWATER SOURCES AT PLANT T

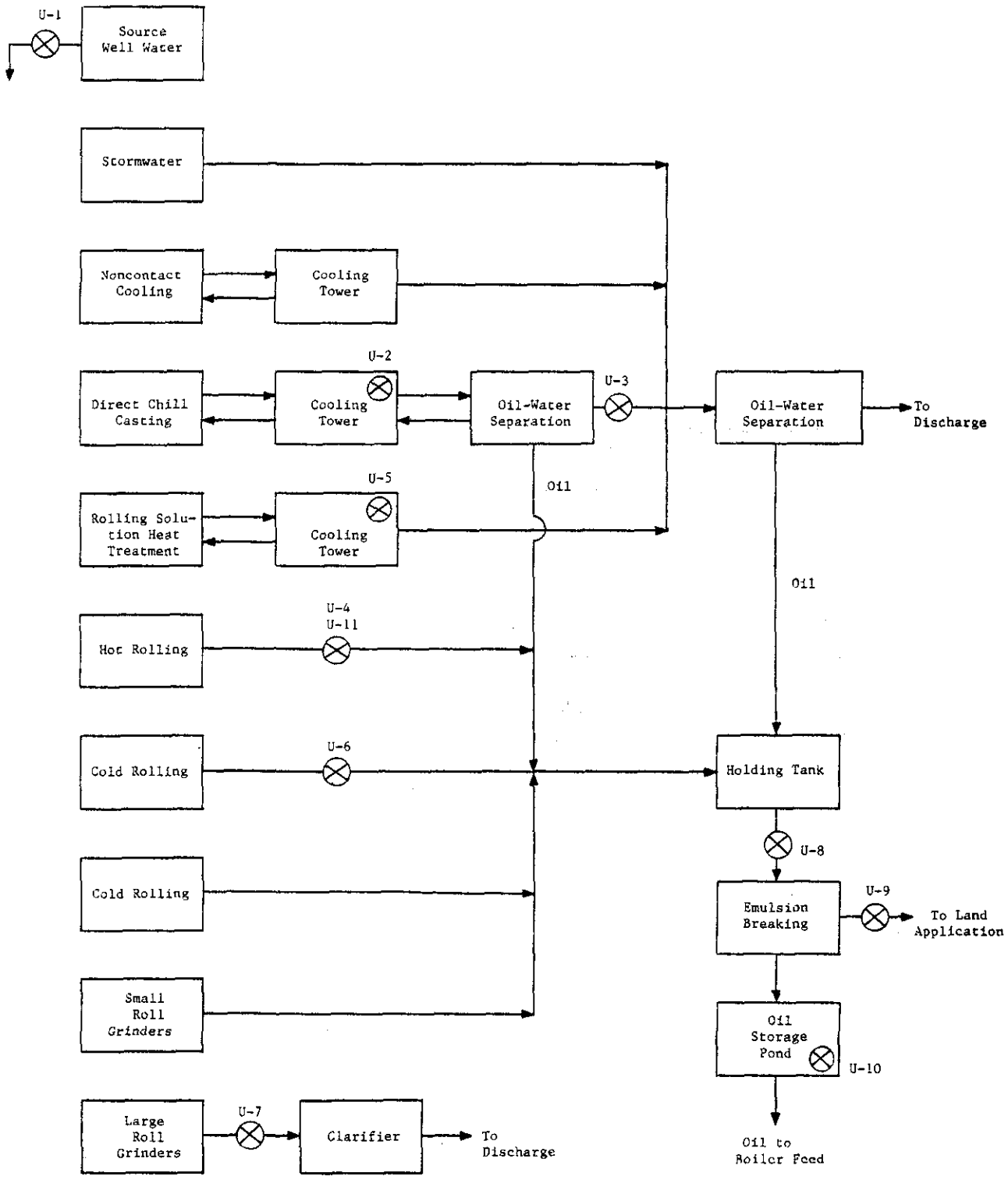

Figure V-18

WASTEWATER SOURCES AT PLANT U

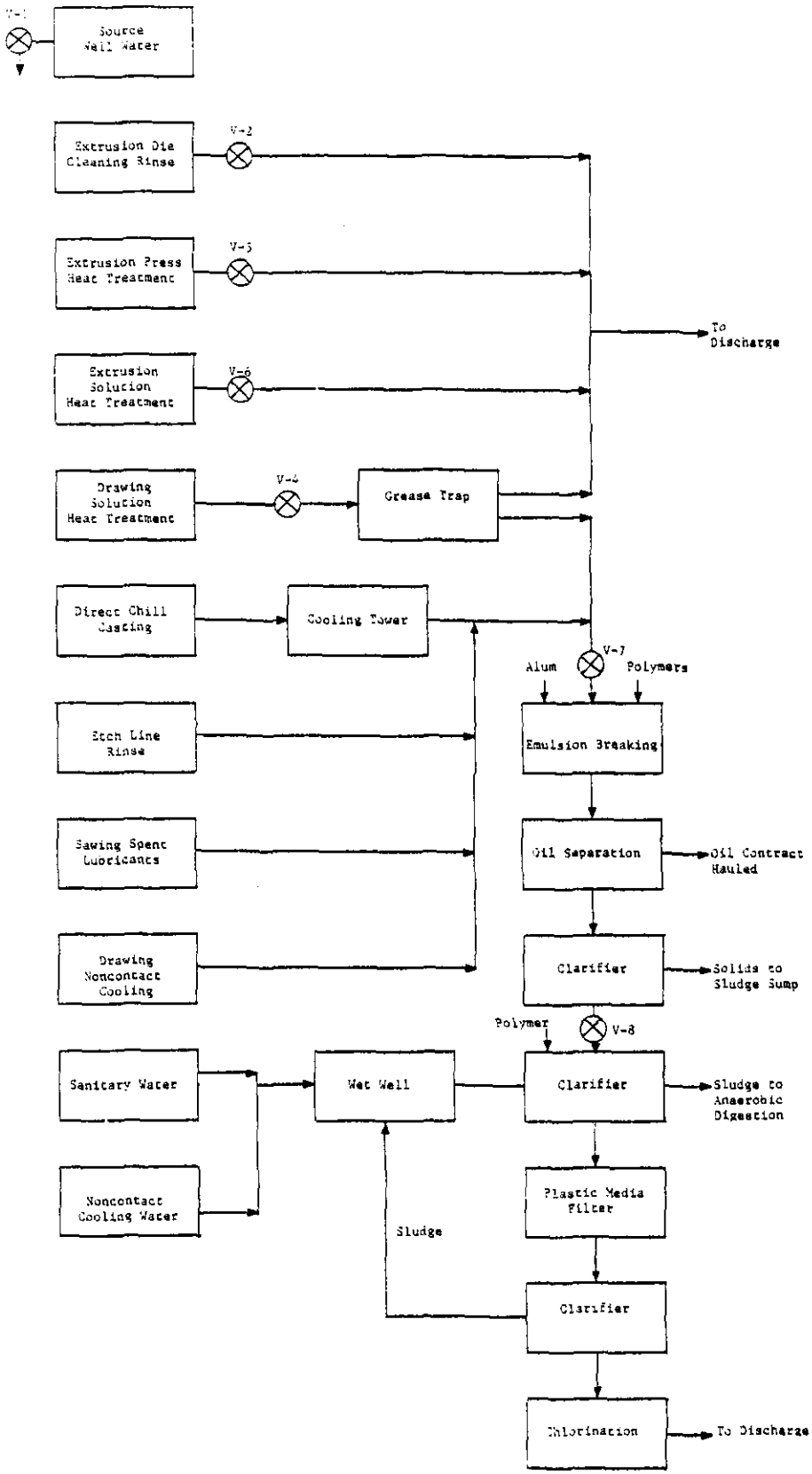

Figure V-19

WASTEWATER SOURCES AT PLANT V

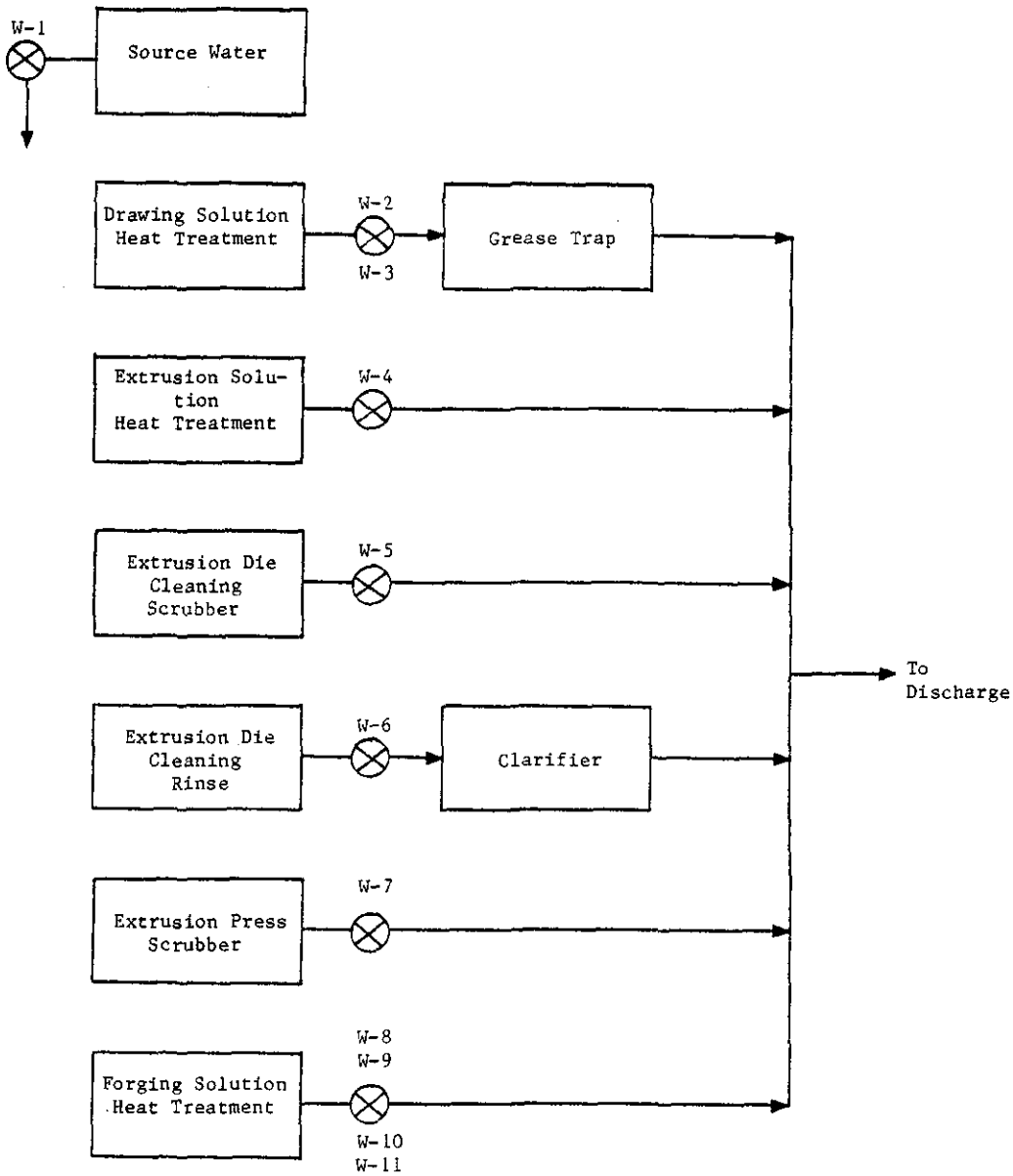

Figure V-20

WASTEWATER SOURCES AT PLANT W

Table V-1

ROLLING WITH NEAT OILS SPENT LUBRICANTS

Plant	Water Use l/kkg	Water Use gal/ton	Percent Recycle	Wastewater l/kkg	Wastewater gal/ton
1	10.17	2.440	*	*	*
2	4.586	1.100	*	*	*
3	4.753	1.140	*	*	*
4	3.144	0.7540	*	*	*

*Data not available.

Statistical Summary

Minimum	3.144	0.7540
Maximum	10.17	2.440
Mean	5.666	1.359
Median	4.670	1.120
Sample:	4 of 50 plants	

Note: Table does not include 46 plants which provided insufficient information to calculate water use and wastewater values.

Table V-2

FREQUENCY OF OCCURRENCE OF TOXIC POLLUTANTS
ROLLING WITH NEAT OILS SPENT LUBRICANTS
RAW WASTEWATER

	Pollutant	Analytical Quantification Level (mg/l)	Number of Streams Analyzed	Number of Samples Analyzed	Number of Times Observed in Samples (mg/l) ND-0.010	0.011-0.100	0.101-1.000	1.000+
1.	acenaphthene	0.010	1	2	2			
2.	acrolein	0.010	1	1	1			
3.	acrylonitrile	0.010	1	1	1			
4.	benzene	0.010	1	1		1		
5.	benzidine	0.010	1	2	2			
6.	carbon tetrachloride	0.010	1	1	1			
7.	chlorobenzene	0.010	1	1	1			
8.	1,2,4-trichlorobenzene	0.010	1	2	2			
9.	hexachlorobenzene	0.010	1	2	2			
10.	1,2-dichloroethane	0.010	1	1	1			
11.	1,1,1-trichloroethane	0.010	1	1			1	
12.	hexachloroethane	0.010	1	2	2			
13.	1,1-dichloroethane	0.010	1	1	1			
14.	1,1,2-trichloroethane	0.010	1	1	1			
15.	1,1,2,2-tetrachloroethane	0.010	1	1	1			
16.	chloroethane	0.010	1	1	1			
17.	bis(chloromethyl)ether	0.010	1	2	2			
18.	bis(chloroethyl)ether	0.010	1	2	2			
19.	2-chloroethyl vinyl ether	0.010	1	1	1			
20.	2-chloronaphthalene	0.010	1	2	2			
21.	2,4,6-trichlorophenol	0.010	1	2	2			
22.	p-chloro-m-cresol	0.010	1	2	2			
23.	chloroform	0.010	1	1	1			
24.	2-chlorophenol	0.010	1	2	2			
25.	1,2-dichlorobenzene	0.010	1	2	2			
26.	1,3-dichlorobenzene	0.010	1	2	2			
27.	1,4-dichlorobenzene	0.010	1	2	2			
28.	3,3'-dichlorobenzidine	0.010	1	2	2			
29.	1,1-dichloroethylene	0.010	1	1	1			
30.	1,2-trans-dichloroethylene	0.010	1	1	1			
31.	2,4-dichlorophenol	0.010	1	2	2			
32.	1,2-dichloropropane	0.010	1	1	1			
33.	1,3-dichloropropene	0.010	1	1	1			
34.	2,4-dimethylphenol	0.010	1	2	2			
35.	2,4-dinitrotoluene	0.010	1	2	2			
36.	2,6-dinitrotoluene	0.010	1	2	2			
37.	1,2-diphenylhydrazine	0.010	1	2	2			
38.	ethylbenzene	0.010	1	1			1	
39.	fluoranthene	0.010	1	2	2			

Table V-2 (Continued)

FREQUENCY OF OCCURRENCE OF TOXIC POLLUTANTS
ROLLING WITH NEAT OILS SPENT LUBRICANTS
RAW WASTEWATER

	Pollutant	Analytical Quantification Level (mg/l)	Number of Streams Analyzed	Number of Samples Analyzed	Number of Times Observed in Samples (mg/l) ND-0.010	0.011-0.100	0.101-1.000	1.000+
40.	4-chlorophenyl phenyl ether	0.010	1	2	2			
41.	4-bromophenyl phenyl ether	0.010	1	2	2			
42.	bis(2-chloroisopropyl)ether	0.010	1	2	2			
43.	bis(2-chloroethoxy)methane	0.010	1	2	2			
44.	methylene chloride	0.010	1	1			1	
45.	methyl chloride (chloromethane)	0.010	1	1	1			
46.	methyl bromide (bromomethane)	0.010	1	1	1			
47.	bromoform (tribromomethane)	0.010	1	1	1			
48.	dichlorobromomethane	0.010	1	1	1			
49.	trichlorofluoromethane	0.010	1	1	1			
50.	dichlorodifluoromethane	0.010	1	1	1			
51.	chlorodibromomethane	0.010	1	1	1			
52.	hexachlorobutadiene	0.010	1	2	2			
53.	hexachlorocyclopentadiene	0.010	1	2	2			
54.	isophorone	0.010	1	2	2			
55.	naphthalene	0.010	1	2	2			
56.	nitrobenzene	0.010	1	2	2			
57.	2-nitrophenol	0.010	1	2	2			
58.	4-nitrophenol	0.010	1	2	2			
59.	2,4-dinitrophenol	0.010	1	2	2			
60.	4,6-dinitro-o-cresol	0.010	1	2	2			
61.	N-nitrosodimethylamine	0.010	1	2	2			
62.	N-nitrosodiphenylamine	0.010	1	2	2			
63.	N-nitrosodi-n-propylamine	0.010	1	2	2			
64.	pentachlorophenol	0.010	1	2	2			
65.	phenol	0.010	1	2	2			
66.	bis (2-ethylhexyl) phthalate	0.010	1	2				2
67.	butyl benzyl phthalate	0.010	1	2	2			
68.	di-n-butyl phthalate	0.010	1	2				2
69.	di-n-octyl phthalate	0.010	1	2	2			
70.	diethyl phthalate	0.010	1	2				2
71.	dimethyl phthalate	0.010	1	2	2			
72.	benzo(a)anthracene	0.010	1	2	2			
73.	benzo(a)pyrene	0.010	1	2	2			
74.	benzo(b)fluoranthene	0.010	1	2	2			
75.	benzo(k)fluoranthene	0.010	1	2	2			
76.	chrysene	0.010	1	2	2			
77.	acenaphthylene	0.010	1	2	2			
78.	anthracene (a)	0.010	1	2				2

Table V-2 (Continued)

FREQUENCY OF OCCURRENCE OF TOXIC POLLUTANTS
ROLLING WITH NEAT OILS SPENT LUBRICANTS
RAW WASTEWATER

	Pollutant	Analytical Quantification Level (mg/l)	Number of Streams Analyzed	Number of Samples Analyzed	Number of Times Observed in Samples (mg/l) ND-0.010	0.011-0.100	0.101-1.000	1.000+
79.	benzo(ghi)perylene	0.010	1	2	2			
80.	fluorene	0.010	1	2	2			
81.	phenanthrene (a)	0.010	-	-				
82.	dibenzo(a,h)anthracene	0.010	1	2	2			
83.	indeno (1,2,3-c,d)pyrene	0.010	1	2	2			
84.	pyrene	0.010	1	2	2			
85.	tetrachloroethylene	0.010	1	1				1
86.	toluene	0.010	1	1			1	
87.	trichloroethylene	0.010	1	1	1			
88.	vinyl chloride (chloroethylene)	0.010	1	1	1			
89.	aldrin	0.005	0	0				
90.	dieldrin	0.005	0	0				
91.	chlordane	0.005	0	0				
92.	4,4'-DDT	0.005	0	0				
93.	4,4'-DDE	0.005	0	0				
94.	4,4'-DDD	0.005	0	0				
95.	alpha-endosulfan	0.005	0	0				
96.	beta-endosulfan	0.005	0	0				
97.	endosulfan sulfate	0.005	0	0				
98.	endrin	0.005	0	0				
99.	endrin aldehyde	0.005	0	0				
100.	heptachlor	0.005	0	0				
101.	heptachlor epoxide	0.005	0	0				
102.	alpha-BHC	0.005	0	0				
103.	beta-BHC	0.005	0	0				
104.	gamma-BHC	0.005	0	0				
105.	delta-BHC	0.005	0	0				
106.	PCB-1242 (b)	0.005	0	0				
107.	PCB-1254 (b)	0.005	-	-				
108.	PCB-1221 (b)	0.005	-	-				
109.	PCB-1232 (b)	0.005	-	-				
110.	PCB-1248 (c)	0.005	0	0				
111.	PCB-1260 (c)	0.005	-	-				
112.	PCB-1016 (c)	0.005	-	-				
113.	toxaphene	0.005	0	0				
114.	antimony	0.100	0	0				
115.	arsenic	0.010	1	2	2			
116.	asbestos	10 MFL	0	0				

Table V-2 (Continued)

FREQUENCY OF OCCURRENCE OF TOXIC POLLUTANTS
ROLLING WITH NEAT OILS SPENT LUBRICANTS
RAW WASTEWATER

Pollutant	Analytical Quantification Level (mg/l)	Number of Streams Analyzed	Number of Samples Analyzed	Number of Times Observed in Samples (mg/l) ND-0.010	0.011-0.100	0.101-1.000	1.000+
117. beryllium	0.010	1	2	2			
118. cadmium	0.002	1	2			2	
119. chromium (total)	0.005	1	2				2
120. copper	0.009	1	2				2
121. cyanide (total)	0.100	1	2	2			
122. lead	0.020	1	2				2
123. mercury	0.0001	1	2	2			
124. nickel	0.005	1	2		1		1
125. selenium	0.01	0	0				
126. silver	0.02	0	0				
127. thallium	0.100	0	0				
128. zinc	0.050	1	2				2
129. 2,3,7,8-tetrachlorodibenzo-p-dioxin	0.005	0	0				

(a), (b), (c) Reported together.

Table V-3

SAMPLING DATA
ROLLING WITH NEAT OILS SPENT LUBRICANTS
RAW WASTEWATER

Pollutant	Stream Code	Sample Type†	Source	Concentrations (mg/l) Day 1	Day 2	Day 3	Average
Toxic Pollutants							
4. benzene	U-6	1	*		0.080		0.080
11. 1,1,1-trichloroethane	U-6	1	*		0.200		0.200
38. ethylbenzene	U-6	1	ND		0.880		0.880
44. methylene chloride	U-6	1	*		0.310		0.310
66. bis(2-ethylhexyl) phthalate	U-6	1	*	350.000	640.000		495.000
68. di-n-butyl phthalate	U-6	1	*	110.000	100.000		105.000
70. diethyl phthalate	U-6	1	*	48.000	100.000		74.000
78. anthracene (a) 81. phenanthrene (a)	U-6	1	ND	150.000	200.000		175.000
85. tetrachloroethylene	U-6	1	ND		1.400		1.400
86. toluene	U-6	1	ND		0.510		0.510
118. cadmium	U-6	1	0.002	0.29	0.44		0.37
119. chromium	U-6	1	<0.001	2.13	20.0		11.1
120. copper	U-6	1	0.013	5.25	22		14
122. lead	U-6	1	0.010	1.09	7.73		4.41
124. nickel	U-6	1	0.016	0.044	1.87		0.96
128. zinc	U-6	1	<0.010	3.2	20		12
Nonconventional							
aluminum	U-6	1	<0.100	732	663		698
calcium	U-6	1	58.7	485	351		418
chemical oxygen demand (COD)	U-6	1		20,930	20,810		20,870
magnesium	U-6	1	7.44	43.9	43.3		43.6
phenols (total; by 4-AAP method)	U-6	1		2.2	2.1		2.2
total organic carbon (TOC)	U-6	1		11,000	13,000		12,000

Table V-3 (Continued)

SAMPLING DATA
ROLLING WITH NEAT OILS SPENT LUBRICANTS
RAW WASTEWATER

Pollutant	Stream Code	Sample Type†	Source	Concentrations (mg/l) Day 1	Day 2	Day 3	Average
Conventional							
oil and grease	U-6	1		78,300	91,400		85,400
suspended solids	U-6	1		58	66		62

(a) Reported together.

†Sample Type
Note: These numbers also apply to subsequent sampling data tables in this section.
1 one-time grab
2 24-hour manual composite
3 24-hour automatic composite
4 48-hour manual composite
5 48-hour automatic composite
6 72-hour manual composite
7 72-hour automatic composite
* Indicates less than or equal to 0.01 mg/l.
** Indicates less than or equal to 0.005 mg/l.

Table V-4

ROLLING WITH EMULSIONS SPENT EMULSION

Plant	Water Use l/kkg	Water Use gal/ton	Percent Recycle	Wastewater l/kkg	Wastewater gal/ton
1	*	*	* (P)	0.3344	0.0802
2	*	*	* (P)	0.3919	0.0940
3	*	*	* (P)	0.5879	0.1410
4	60.46	14.50	99 (B)	0.6046	0.1450
5	*	*	* (P)	0.6404	0.1536
6	*	*	* (P)	0.6671	0.1600
7	*	*	* (P)	1.376	0.3300
8	*	*	* (P)	2.039	0.4890
9	*	*	* (P)	3.919	0.9400
10	*	*	* (P)	4.837	1.160
11	*	*	* (P)	5.045	1.210
12	*	*	* (P)	6.921	1.660
13	*	*	* (P)	7.255	1.740
14	*	*	* (P)	12.63	3.030
15	*	*	* (P)	15.05	3.610
16	*	*	* (P)	23.35	5.600
17	30,600	7,340	100 (P)	28.13	6.746
18	*	*	* (P)	50.87	12.20
19	*	*	* (P)	89.39	21.44
20	54,870	13,160	97 (B)	181.4	43.50
21	*	*	* (P)	197.8	47.43
22	*	*	*	228.6	54.82
23	41,110	9,860	85 (B)	304.4	73.00
24	*	*	*	344.4	82.60
25	76,340	18,310	100 (P)	352.2	84.48
26	*	*	100 (P)	*	*
27	*	*	* (P)	*	*
28	*	*	* (P)	*	*
29	*	*	* (P)	*	*
30	*	*	* (P)	*	*
31	*	*	*	*	*
32	*	*	*	*	*

*Data not available.
P Periodic discharge.
B Bleed discharge.

Statistical Summary

Minimum	60.46	14.50	0.3344	0.0802
Maximum	76,340	18,310	352.2	84.48
Mean	40,600	9,737	74.51	17.87
Median	41,110	9,860	7.255	1.740
Sample:	5 of 29 plants		25 of 29 plants	

Note: Three plants discharge from both hot and cold rolling operations which appear separately in this table.

Table V-5

FREQUENCY OF OCCURRENCE OF TOXIC POLLUTANTS
ROLLING WITH EMULSIONS SPENT EMULSIONS
RAW WASTEWATER

	Pollutant	Analytical Quantification Level (mg/l)	Number of Streams Analyzed	Number of Samples Analyzed	Number of Times Observed in Samples (mg/l)			
					ND-0.010	0.011-0.100	0.101-1.000	1.000+
1.	acenaphthene	0.010	6	9	7	1		1
2.	acrolein	0.010	4	8	6	2		
3.	acrylonitrile	0.010	4	8	8			
4.	benzene	0.010	4	8	7	1		
5.	benzidine	0.010	6	9	9			
6.	carbon tetrachloride	0.010	4	8	8			
7.	chlorobenzene	0.010	5	9	8	1		
8.	1,2,4-trichlorobenzene	0.010	6	9	9			
9.	hexachlorobenzene	0.010	6	9	9			
10.	1,2-dichloroethane	0.010	4	8	8			
11.	1,1,1-trichloroethane	0.010	4	8	8			
12.	hexachloroethane	0.010	6	9	9			
13.	1,1-dichloroethane	0.010	4	8	8			
14.	1,1,2-trichloroethane	0.010	4	8	8			
15.	1,1,2,2-tetrachloroethane	0.010	4	8	8			
16.	chloroethane	0.010	4	8	8			
17.	bis(chloromethyl)ether	0.010	4	8	8			
18.	bis(chloroethyl)ether	0.010	6	9	9			
19.	2-chloroethyl vinyl ether	0.010	4	8	8			
20.	2-chloronaphthalene	0.010	6	9	9			
21.	2,4,6-trichlorophenol	0.010	6	9	8	1		
22.	p-chloro-m-cresol	0.010	6	10	10			
23.	chloroform	0.010	4	8	6	2		
24.	2-chlorophenol	0.010	6	10	10			
25.	1,2-dichlorobenzene	0.010	6	9	9			
26.	1,3-dichlorobenzene	0.010	6	9	9			
27.	1,4-dichlorobenzene	0.010	6	9	9			
28.	3,3'-dichlorobenzidine	0.010	6	9	9			
29.	1,1-dichloroethylene	0.010	4	8	8			
30.	1,2-trans-dichloroethylene	0.010	4	8	7		1	
31.	2,4-dichlorophenol	0.010	6	10	10			
32.	1,2-dichloropropane	0.010	4	8	8			
33.	1,3-dichloropropene	0.010	4	8	8			
34.	2,4-dimethylphenol	0.010	6	10	10			
35.	2,4-dinitrotoluene	0.010	6	9	9			
36.	2,6-dinitrotoluene	0.010	6	9	9			
37.	1,2-diphenylhydrazine	0.010	6	9	9			
38.	ethylbenzene	0.010	4	8	3	5		
39.	fluoranthene	0.010	6	9	6	3		

Table V-5 (Continued)

FREQUENCY OF OCCURRENCE OF TOXIC POLLUTANTS
ROLLING WITH EMULSIONS SPENT EMULSIONS
RAW WASTEWATER

	Pollutant	Analytical Quantification Level (mg/l)	Number of Streams Analyzed	Number of Samples Analyzed	Number of Times Observed in Samples (mg/l) ND-0.010	0.011-0.100	0.101-1.000	1.000+
40.	4-chlorophenyl phenyl ether	0.010	6	9	9			
41.	4-bromophenyl phenyl ether	0.010	6	9	9			
42.	bis(2-chloroisopropyl)ether	0.010	6	9	9			
43.	bis(2-chloroethoxy)methane	0.010	6	9	9			
44.	methylene chloride	0.010	4	8	3		1	4
45.	methyl chloride (chloromethane)	0.010	4	8	8			
46.	methyl bromide (bromomethane)	0.010	4	8	8			
47.	bromoform (tribromomethane)	0.010	4	8	8			
48.	dichlorobromomethane	0.010	4	8	8			
49.	trichlorofluoromethane	0.010	4	8	8			
50.	dichlorodifluoromethane	0.010	4	8	8			
51.	chlorodibromomethane	0.010	4	8	8			
52.	hexachlorobutadiene	0.010	6	9	9			
53.	hexachlorocyclopentadiene	0.010	6	9	9			
54.	isophorone	0.010	6	9	9			
55.	naphthalene	0.010	6	9	7		2	
56.	nitrobenzene	0.010	6	9	9			
57.	2-nitrophenol	0.010	6	10	10			
58.	4-nitrophenol	0.010	6	10	10			
59.	2,4-dinitrophenol	0.010	6	10	10			
60.	4,6-dinitro-o-cresol	0.010	6	10	10			
61.	N-nitrosodimethylamine	0.010	6	9	9			
62.	N-nitrosodiphenylamine	0.010	6	9	6		2	1
63.	N-nitrosodi-n-propylamine	0.010	6	9	9			
64.	pentachlorophenol	0.010	6	10	10			
65.	phenol	0.010	6	10	7		2	1
66.	bis (2-ethylhexyl) phthalate	0.010	6	9	5		2	2
67.	butyl benzyl phthalate	0.010	6	9	8		1	
68.	di-n-butyl phthalate	0.010	6	9	5		2	2
69.	di-n-octyl phthalate	0.010	6	9	9			
70.	diethyl phthalate	0.010	6	10	5		2	2
71.	dimethyl phthalate	0.010	6	9	8			1
72.	benzo(a)anthracene	0.010	6	9	9			
73.	benzo(a)pyrene	0.010	6	9	9			
74.	benzo(b)fluoranthene	0.010	6	9	9			
75.	benzo(k)fluoranthene	0.010	6	9	9			
76.	chrysene	0.010	6	9	8		1	
77.	acenaphthylene	0.010	6	9	8		1	
78.	anthracene (a)	0.010	6	9	7			2

Table V-5 (Continued)

FREQUENCY OF OCCURRENCE OF TOXIC POLLUTANTS
ROLLING WITH EMULSIONS SPENT EMULSIONS
RAW WASTEWATER

	Pollutant	Analytical Quantification Level (mg/l)	Number of Streams Analyzed	Number of Samples Analyzed	Number of Times Observed in Samples (mg/l) ND-0.010	0.011-0.100	0.101-1.000	1.000+
79.	benzo(ghi)perylene	0.010	6	9	9			
80.	fluorene	0.010	6	9	4	2	3	
81.	phenanthrene (a)	0.010	-	-				
82.	dibenzo(a,h)anthracene	0.010	6	9	9			
83.	indeno (1,2,3-c,d)pyrene	0.010	6	9	9			
84.	pyrene	0.010	6	9	5	4		
85.	tetrachloroethylene	0.010	4	8	4	1		3
86.	toluene	0.010	4	8	3	3	2	
87.	trichloroethylene	0.010	4	8	7			1
88.	vinyl chloride (chloroethylene)	0.010	4	8	8			
89.	aldrin	0.005	5	7	7			
90.	dieldrin	0.005	5	7	7			
91.	chlordane	0.005	5	7	6	1		
92.	4,4'-DDT	0.005	5	7	7			
93.	4,4'-DDE	0.005	5	7	6	1		
94.	4,4'-DDD	0.005	5	7	7			
95.	alpha-endosulfan	0.005	5	7	7			
96.	beta-endosulfan	0.005	5	7	7			
97.	endosulfan sulfate	0.005	5	7	6	1		
98.	endrin	0.005	5	7	6	1		
99.	endrin aldehyde	0.005	5	7	5	2		
100.	heptachlor	0.005	5	7	7			
101.	heptachlor epoxide	0.005	5	7	7			
102.	alpha-BHC	0.005	5	7	6	1		
103.	beta-BHC	0.005	5	7	6	1		
104.	gamma-BHC	0.005	5	7	7			
105.	delta-BHC	0.005	5	7	7			
106.	PCB-1242 (b)	0.005	-	-				
107.	PCB-1254 (b)	0.005	5	7	4	2		1
108.	PCB-1221 (b)	0.005	-	-				
109.	PCB-1232 (b)	0.005	-	-				
110.	PCB-1248 (c)	0.005	5	7	4	1	1	1
111.	PCB-1260 (c)	0.005	-	-				
112.	PCB-1016 (c)	0.005	-	-				
113.	toxaphene	0.005	5	7	7			
114.	antimony	0.100	5	9	9			
115.	arsenic	0.010	5	9	5	4		
116.	asbestos	10 MFL	0	0				

Table V-5 (Continued)

FREQUENCY OF OCCURRENCE OF TOXIC POLLUTANTS
ROLLING WITH EMULSIONS SPENT EMULSIONS
RAW WASTEWATER

Pollutant	Analytical Quantification Level (mg/l)	Number of Streams Analyzed	Number of Samples Analyzed	Number of Times Observed in Samples (mg/l)			
				ND-0.010	0.011-0.100	0.101-1.000	1.000+
117. beryllium	0.010	5	9	9			
118. cadmium	0.002	5	9	4	4	1	
119. chromium (total)	0.005	5	9	3	3	3	
120. copper	0.009	5	9	4		2	3
121. cyanide (total)	0.100	6	10	2	5	2	1
122. lead	0.020	5	9	3		1	5
123. mercury	0.0001	5	9	9			
124. nickel	0.005	5	9	3	2	4	
125. selenium	0.01	5	9	9			
126. silver	0.02	5	9	9			
127. thallium	0.100	5	9	9			
128. zinc	0.050	5	9	3			6
129. 2,3,7,8-tetrachlorodibenzo-p-dioxin	0.005	0	0				

(a), (b), (c) Reported together.

Table V-6

SAMPLING DATA
ROLLING WITH EMULSIONS SPENT EMULSIONS
RAW WASTEWATER

Pollutant	Stream Code	Sample Type	Source	Concentrations (mg/l) Day 1	Day 2	Day 3	Average
Toxic Pollutants							
1. acenaphthene	B-6	6	ND	ND			
	E-7	3	*	5.700	ND	ND	5.700
	P-5	1	ND	ND	ND		
	T-1	1		0.095			0.095
	U-4	1	ND	ND			
	U-11	1	ND	ND			
2. acrolein	E-7	1	ND	ND	ND	ND	
	P-5	1	ND	ND	ND	ND	
	U-4	1	ND	0.050			0.050
	U-11	1	ND	0.040			0.040
4. benzene	E-7	1	ND	ND	ND	*	*
	P-5	1	ND	0.020	ND	*	0.010
	U-4	1	*	*			*
	U-11	1	*	*			*
7. chlorobenzene	E-7	1	ND	ND	0.011	ND	0.011
	P-5	1	ND	ND	ND	ND	
	U-4	1	ND	ND			
	U-11	1	ND	ND			
21. 2,4,6-trichlorophenol	B-6	6	*	ND			
	E-7	3	*	ND	ND	ND	
	P-5	1	ND	ND	ND		
	T-1	1		0.022			0.022
	U-4	1	ND	ND			
	U-11	1	ND	ND			
23. chloroform	E-7	1	*	0.013	0.026	*	0.013
	P-5	1	ND	ND	ND	ND	
	U-4	1	*	ND			
	U-11	1	*	ND			
30. 1,2-trans-di-chloroethylene	E-7	1	ND	ND	0.690	ND	0.690
	P-5	1	ND	ND	ND	ND	
	U-4	1	ND	ND			
	U-11	1	ND	ND			
38. ethylbenzene	E-7	1	ND	ND	0.089	ND	0.089
	P-5	1	ND	0.020	0.030	0.070	0.040
	U-4	1	ND	0.040			0.040
	U-11	1	ND	ND			

Table V-6 (Continued)

SAMPLING DATA
ROLLING WITH EMULSIONS SPENT EMULSIONS
RAW WASTEWATER

Pollutant	Stream Code	Sample Type	Source	Concentrations (mg/l) Day 1	Day 2	Day 3	Average
39. fluoranthene	B-6	6	ND	ND			
	E-7	3	ND	ND	0.066	0.051	0.059
	P-5	1	ND	ND	ND		
	T-1	1		ND			
	U-4	1	ND	ND			
	U-11	1	ND	0.020			0.020
44. methylene chloride	E-7	1	0.017	*	1.100	0.360	0.487
	P-5	1	0.010	1.200	1.000	1.300	1.167
	U-4	1	*	*			*
	U-11	1	*	*			*
55. naphthalene	B-6	6	ND	ND			
	E-7	3	ND	ND	ND	ND	
	P-5	1	ND	0.750	ND		0.750
	T-1	1		ND			
	U-4	1	ND	0.150			0.150
	U-11	1	ND	*			*
62. N-nitrosodiphenylamine	B-6	6	ND	ND			
	E-7	3	ND	ND	0.780	1.500	1.140
	P-5	1	ND	ND	ND		
	T-1	1		ND			
	U-4	1	ND	ND			
	U-11	1	ND	0.600			0.600
65. phenol	B-6	6	*	ND			
	E-7	3	*	ND	0.270	ND	0.270
	P-5	1	ND	ND	0.180	ND	0.180
	T-1	1		9.900			9.900
	U-4	1	ND	ND			
	U-11	1	ND	ND			
66. bis(2-ethylhexyl) phthalate	B-6	6	0.010	ND			
	E-7	3	*	2.900	0.320	0.520	1.247
	P-5	1	**	ND	ND		
	T-1	1		1.900			1.900
	U-4	1	*	ND			
	U-11	1	*	ND			
67. butyl benzyl phthalate	B-6	6	*	ND			
	E-7	3	*	ND	ND	ND	
	P-5	1	ND	ND	ND		
	T-1	1		0.190			0.190
	U-4	1	ND	ND			
	U-11	1	ND	ND			

Table V-6 (Continued)

SAMPLING DATA
ROLLING WITH EMULSIONS SPENT EMULSIONS
RAW WASTEWATER

Pollutant	Stream Code	Sample Type	Source	Concentrations (mg/l) Day 1	Day 2	Day 3	Average
68. di-n-butyl phthalate	B-6	6	*	ND			
	E-7	3	*	3.100	0.370	0.330	1.267
	P-5	1	ND	ND	ND		
	T-1	1		19.000			19.000
	U-4	1	*	ND			
	U-11	1	*	ND			
70. diethyl phthalate	B-6	6	*	ND			
	E-7	3	*	1.900	0.340	0.220	0.820
	P-5	1	ND	ND	ND		
	T-1	1		3.100			3.100
	U-4	1	*	ND			
	U-11	1	*	ND			
71. dimethyl phthalate	B-6	6	ND	ND			
	E-7	3	*	1.200	ND	ND	1.200
	P-5	1	ND	ND	ND		
	T-1	1		ND			
	U-4	1	ND	ND			
	U-11	1	ND	ND			
76. chrysene	B-6	6	ND	ND			
	E-7	3	*	ND	ND	ND	
	P-5	1	ND	ND	ND		
	T-1	1		0.360			0.360
	U-4	1	ND	ND			
	U-11	1	ND	*			*
77. acenaphthylene	B-6	6	ND	ND			
	E-7	3	*	ND	1.000	ND	1.000
	P-5	1	ND	ND	ND		
	T-1	1		ND			
	U-4	1	ND	ND			
	U-11	1	ND	ND			
78. anthracene (a) 81. phenanthrene (a)	B-6	6	ND	ND			
	E-7	3	ND	ND	1.000	2.000	1.500
	P-5	1	ND	ND	ND		
	T-1	1		<1.100			<1.100
	U-4	1	ND	<0.090			<0.090
	U-11	1	ND	<0.200			<0.200
80. fluorene	B-6	6	ND	ND			
	E-7	3	*	ND	0.220	0.760	0.490
	P-5	1	ND	ND	ND		
	T-1	1		0.450			0.450
	U-4	1	ND	0.070			0.070
	U-11	1	ND	0.040			0.040

Table V-6 (Continued)

SAMPLING DATA
ROLLING WITH EMULSIONS SPENT EMULSIONS
RAW WASTEWATER

Pollutant	Stream Code	Sample Type	Source	Concentrations (mg/l) Day 1	Day 2	Day 3	Average
84. pyrene	B-6	6	ND	ND			
	E-7	3	ND	ND	0.075	0.048	0.062
	P-5	1	ND	ND	ND		
	T-1	1		0.098			0.098
	U-4	1	ND	ND			
	U-11	1	ND	0.020			0.020
85. tetrachloroethylene	E-7	1	ND	ND	0.040	0.010	0.025
	P-5	1	ND	4.700	1.900	4.200	3.600
	U-4	1	ND	*			*
	U-11	1	ND	*			*
86. toluene	E-7	1	ND	ND	0.089	*	0.045
	P-5	1	ND	0.200	0.040	0.160	0.133
	U-4	1	ND	0.040			0.040
	U-11	1	ND	*			*
87. trichloroethylene	E-7	3	ND	ND	4.800	ND	4.800
	P-5	1	ND	ND	ND	ND	
	U-4	1	ND	ND			
	U-11	1	ND	ND			
91. chlordane	B-6	6	ND	ND			
	E-7	3	**	0.013			0.013
	P-5	1	ND	ND	ND	ND	
	T-1	1		ND			
	U-11	1	ND	ND			
93. 4,4'-DDE	B-6	6	**	0.053			0.053
	E-7	3	**	ND			
	P-5	1	ND	ND	ND	ND	
	T-1	1		ND			
	U-11	1	ND	ND			
95. alpha-endosulfan	B-6	6	ND	0.008			0.008
	E-7	3	ND	ND			
	P-5	1	ND	ND	ND	ND	
	T-1	1		ND			
	U-11	1	ND	ND			
96. beta-endosulfan	B-6	6	ND	0.006			0.006
	E-7	3	ND	ND			
	P-5	1	ND	ND	ND	ND	
	T-1	1		ND			
	U-11	1	ND	ND			

Table V-6 (Continued)

SAMPLING DATA
ROLLING WITH EMULSIONS SPENT EMULSIONS
RAW WASTEWATER

Pollutant	Stream Code	Sample Type	Source	Concentrations (mg/l) Day 1	Day 2	Day 3	Average
97. endosulfan sulfate	B-6	6	ND	0.010			0.010
	E-7	3	ND	0.012			0.012
	P-5	1	ND	ND	ND	ND	
	T-1	1		ND			
	U-11	1	ND	ND			
98. endrin	B-6	6	**	0.010			0.010
	E-7	3	ND	0.066			0.066
	P-5	1	ND	ND	ND	ND	
	T-1	1		ND			
	U-11	1	ND	ND			
99. endrin aldehyde	B-6	6	ND	ND			
	E-7	3	ND	0.014			0.014
	P-5	1	ND	ND	ND	ND	
	T-1	1		0.058			0.058
	U-11	1	ND	ND			
102. alpha-BHC	B-6	6	ND	0.013			0.013
	E-7	3	**	ND			
	P-5	1	ND	ND	ND	ND	
	T-1	1		ND			
	U-11	1	ND	ND			
103. beta-BHC	B-6	6	**	ND			
	E-7	3	**	ND			
	P-5	1	ND	ND	ND	ND	
	T-1	1		0.018			0.018
	U-11	1	ND	ND			
106. PCB-1242 (b)	B-6	6	**	1.100			1.100
107. PCB-1254 (b)	E-7	3	**	0.076			0.076
108. PCB-1221 (b)	P-5	1	ND	ND	ND	ND	
	T-1	1		0.063			0.063
	U-11	1	ND	ND			
109. PCB-1232 (c)	B-6	6	**	1.800			1.800
110. PCB-1248 (c)	E-7	3	**	0.160			0.160
111. PCB-1260 (c)	P-5	1	ND	ND	ND	ND	
112. PCB-1016 (c)	T-1	1		0.065			0.065
	U-11	1	ND	ND			
115. arsenic	B-6	6	<0.01	0.05			0.05
	E-7	3	<0.010	<0.010	<0.010	<0.010	<0.010
	P-5	1	0.001	0.016	0.019	0.013	0.016
	U-4	1	<0.002	<0.002			<0.002
	U-11	1	<0.002	<0.002			<0.002

Table V-6 (Continued)

SAMPLING DATA
ROLLING WITH EMULSIONS SPENT EMULSIONS
RAW WASTEWATER

Pollutant	Stream Code	Sample Type	Source	Concentrations (mg/l) Day 1	Day 2	Day 3	Average
118. cadmium	B-6	6		<0.002			<0.002
	E-7	3	<0.002	<0.0002	<0.0002	<0.0002	<0.0002
	P-5	1	<0.0005	0.014	0.016	0.014	0.015
	U-4	1	0.002	0.065			0.065
	U-11	1	0.002	0.180			0.180
119. chromium	B-6	6		1			1
	E-7	3	<0.005	0.001	<0.001	0.001	<0.001
	P-5	1	0.002	0.031	0.070	0.023	0.041
	U-4	1	<0.001	0.115			0.115
	U-11	1	<0.001	0.124			0.124
120. copper	B-6	6		1			1
	E-7	3	0.009	0.009	0.003	0.009	0.007
	P-5	1	0.009	1.10	ND	0.780	0.94
	U-4	1	0.013	7.40			7.40
	U-11	1	0.013	4.14			4.14
121. cyanide	B-6	1		0.019			0.019
	D-2	1		0.059			0.059
	E-7	1		0.053	0.016	0.055	0.041
	P-5	1		0.16	2.5	0.17	0.9
	U-4	1		<0.02			<0.02
	U-11	1		<0.02			<0.02
122. lead	B-6	6		0.4			0.4
	E-7	3	<0.020	0.005	<0.002	0.003	<0.003
	P-5	1	0.002	2.10	2.40	1.50	2.00
	U-4	1	0.010	12.10			12.10
	U-11	1	0.010	56.90			56.90
123. mercury	B-6	6		0.0001			0.0001
	E-7	3	0.0004	<0.020	<0.100	<0.100	<0.073
	P-5	1	<0.0001	<0.0001	<0.0001	<0.0001	<0.0001
	U-4	1	0.005	0.004			0.004
	U-11	1	0.005	0.007			0.007
124. nickel	B-6	6		1			1
	E-7	3	<0.005	<0.001	<0.001	<0.001	<0.001
	P-5	1	<0.001	0.070	0.140	0.049	0.086
	U-4	1	0.016	0.214			0.214
	U-11	1	0.016	0.130			0.130
128. zinc	B-6	6		5			5
	E-7	3	<0.050	0.008	<0.005	0.008	<0.007
	P-5	1	<0.010	1.3	1.7	1.1	1.4
	U-4	1	<0.010	4.200			4.200
	U-11	1	<0.010	2.200			2.200

Table V-6 (Continued)

SAMPLING DATA
ROLLING WITH EMULSIONS SPENT EMULSIONS
RAW WASTEWATER

Pollutant	Stream Code	Sample Type	Source	Concentrations (mg/l) Day 1	Day 2	Day 3	Average
Nonconventional							
alkalinity	E-7	3	ND	330.0	290.0	220.0	280.0
	U-4	1		440			440
	U-11	1		620			620
aluminum	E-7	3	<0.09	350	130	310	260
	P-5	1	<0.5	52	41	40	44
	U-4	1	<0.1	210			210
	U-11	1	<0.1	20			20
calcium	E-7	3	68	<19.3	<22.3	19.3	<20.3
	P-5	1	96.0	19.0	30.0	17.0	22.0
	U-4	1	58.7	26.7			26.7
	U-11	1	58.7	18.1			18.1
chemical oxygen demand (COD)	D-2	6		1,520,000			1,520,000
	E-7	3	<5	85.8	75.5	78.1	79.8
	P-5	1	<5	22,100	36,800	30,300	29,730
	U-4	1		109,900			109,900
	U-11	1		148,500			148,500
dissolved solids	U-4	1		26,700			26,700
	U-11	1		34,300			34,300
magnesium	E-7	3	3.8	22.3	<22.3	<22.3	<22.3
	P-5	1	26.00	9.50	14.00	9.00	10.83
	U-4	1	7.44	11.50			11.50
	U-11	1	7.44	16.70			16.70
phenols (total; by 4-AAP method)	D-2	1		49.00			49.00
	E-7	1		0.249	0.098	0.284	0.210
	P-5	1		0.228	0.258	0.224	0.237
	U-4	1		0.466			0.466
	U-11	1		0.248			0.248
sulfate	E-7	3	ND	<0.025	<0.025	<0.025	<0.025
total organic carbon (TOC)	D-2	6		560,000			560,000
	E-7	3	1	48.6	37.0	30.3	38.0
	P-5	1	2,000	1,280	2,950	1,140	1,790
	U-4	1		6,800			6,800
	U-11	1		23,000			23,000

Table V-6 (Continued)

SAMPLING DATA
ROLLING WITH EMULSIONS SPENT EMULSIONS
RAW WASTEWATER

Pollutant	Stream Code	Sample Type	Source	Concentrations (mg/l) Day 1	Day 2	Day 3	Average
Conventional							
oil and grease	D-2	1		802,000			802,000
	E-7	1		21,300	13,000	18,400	17.6 — ?
	P-5	1		12,500	2,300	1,380	5,390
	T-1	1		1,277			1,277
	U-4	1		28,400			28,400
	U-11	1		30,700			30,700
suspended solids	D-2	6		2,700			2,700
	E-7	3	<1	0.540	1.060	0.680	0.760
	P-5	1	5	2,200	1,700	3,500	2,500
	U-4	1		3,910			3,910
	U-11	1		890			890
pH (standard units)	P-5	1		7.1	6.9		

(a), (b), (c) Reported together.

Table V-7

ROLL GRINDING SPENT LUBRICANT

Plant	Water Use l/kkg	Water Use gal/ton	Percent Recycle	Wastewater l/kkg	Wastewater gal/ton
1	*	*	100	0	0
2	*	*	100	0	0
3	*	*	P	0.6779	0.1626
4	*	*	*	7.659	1.837
5	*	*	P	18.00	4.317
6	0.0576	0.0138	P	*	*
7	*	*	*	*	*

*Sufficient data not available to calculate these values.

P Total recycle with periodic discharge.

Statistical Summary

Minimum	0	0
Maximum	18.00	4.317
Mean	5.266	1.263
Median	0.6779	0.1626
Sample:	5 of 7 plants	
Nonzero Mean	8.770	2.103
Sample:	3 of 7 plants	

Table V-8

FREQUENCY OF OCCURRENCE OF TOXIC POLLUTANTS
ROLL GRINDING SPENT LUBRICANT
RAW WASTEWATER

	Pollutant	Analytical Quantification Level (mg/l)	Number of Streams Analyzed	Number of Samples Analyzed	Number of Times Observed in Samples (mg/l) ND-0.010	0.011-0.100	0.101-1.000	1.000+
1.	acenaphthene	0.010	1	1	1			
2.	acrolein	0.010	1	1		1		
3.	acrylonitrile	0.010	1	1	1			
4.	benzene	0.010	1	1	1			
5.	benzidine	0.010	1	1	1			
6.	carbon tetrachloride	0.010	1	1	1			
7.	chlorobenzene	0.010	1	1	1			
8.	1,2,4-trichlorobenzene	0.010	1	1	1			
9.	hexachlorobenzene	0.010	1	1	1			
10.	1,2-dichloroethane	0.010	1	1	1			
11.	1,1,1-trichloroethane	0.010	1	1	1			
12.	hexachloroethane	0.010	1	1	1			
13.	1,1-dichloroethane	0.010	1	1	1			
14.	1,1,2-trichloroethane	0.010	1	1	1			
15.	1,1,2,2-tetrachloroethane	0.010	1	1	1			
16.	chloroethane	0.010	1	1	1			
17.	bis(chloromethyl)ether	0.010	1	1	1			
18.	bis(chloroethyl)ether	0.010	1	1	1			
19.	2-chloroethyl vinyl ether	0.010	1	1	1			
20.	2-chloronaphthalene	0.010	1	1	1			
21.	2,4,6-trichlorophenol	0.010	1	1	1			
22.	p-chloro-m-cresol	0.010	1	1	1			
23.	chloroform	0.010	1	1	1			
24.	2-chlorophenol	0.010	1	1	1			
25.	1,2-dichlorobenzene	0.010	1	1	1			
26.	1,3-dichlorobenzene	0.010	1	1	1			
27.	1,4-dichlorobenzene	0.010	1	1	1			
28.	3,3'-dichlorobenzidine	0.010	1	1	1			
29.	1,1-dichloroethylene	0.010	1	1	1			
30.	1,2-trans-dichloroethylene	0.010	1	1	1			
31.	2,4-dichlorophenol	0.010	1	1	1			
32.	1,2-dichloropropane	0.010	1	1	1			
33.	1,3-dichloropropene	0.010	1	1	1			
34.	2,4-dimethylphenol	0.010	1	1	1			
35.	2,4-dinitrotoluene	0.010	1	1	1			
36.	2,6-dinitrotoluene	0.010	1	1	1			
37.	1,2-diphenylhydrazine	0.010	1	1	1			
38.	ethylbenzene	0.010	1	1	1			
39.	fluoranthene	0.010	1	1	1			

Table V-8 (Continued)

FREQUENCY OF OCCURRENCE OF TOXIC POLLUTANTS
ROLL GRINDING SPENT LUBRICANT
RAW WASTEWATER

	Pollutant	Analytical Quantification Level (mg/l)	Number of Streams Analyzed	Number of Samples Analyzed	Number of Times Observed in Samples (mg/l)			
					ND-0.010	0.011-0.100	0.101-1.000	1.000+
40.	4-chlorophenyl phenyl ether	0.010	1	1	1			
41.	4-bromophenyl phenyl ether	0.010	1	1	1			
42.	bis(2-chloroisopropyl)ether	0.010	1	1	1			
43.	bis(2-chloroethoxy)methane	0.010	1	1	1			
44.	methylene chloride	0.010	1	1	1			
45.	methyl chloride (chloromethane)	0.010	1	1	1			
46.	methyl bromide (bromomethane)	0.010	1	1	1			
47.	bromoform (tribromomethane)	0.010	1	1	1			
48.	dichlorobromomethane	0.010	1	1	1			
49.	trichlorofluoromethane	0.010	1	1	1			
50.	dichlorodifluoromethane	0.010	1	1	1			
51.	chlorodibromomethane	0.010	1	1	1			
52.	hexachlorobutadiene	0.010	1	1	1			
53.	hexachlorocyclopentadiene	0.010	1	1	1			
54.	isophorone	0.010	1	1	1			
55.	naphthalene	0.010	1	1	1			
56.	nitrobenzene	0.010	1	1	1			
57.	2-nitrophenol	0.010	1	1	1			
58.	4-nitrophenol	0.010	1	1	1			
59.	2,4-dinitrophenol	0.010	1	1	1			
60.	4,6-dinitro-o-cresol	0.010	1	1	1			
61.	N-nitrosodimethylamine	0.010	1	1	1			
62.	N-nitrosodiphenylamine	0.010	1	1	1			
63.	N-nitrosodi-n-propylamine	0.010	1	1	1			
64.	pentachlorophenol	0.010	1	1	1			
65.	phenol	0.010	1	1	1			
66.	bis (2-ethylhexyl) phthalate	0.010	1	1	1			
67.	butyl benzyl phthalate	0.010	1	1	1			
68.	di-n-butyl phthalate	0.010	1	1	1			
69.	di-n-octyl phthalate	0.010	1	1	1			
70.	diethyl phthalate	0.010	1	1	1			
71.	dimethyl phthalate	0.010	1	1	1			
72.	benzo(a)anthracene	0.010	1	1	1			
73.	benzo(a)pyrene	0.010	1	1	1			
74.	benzo(b)fluoranthene	0.010	1	1	1			
75.	benzo(k)fluoranthene	0.010	1	1	1			
76.	chrysene	0.010	1	1	1			
77.	acenaphthylene	0.010	1	1	1			
78.	anthracene (a)	0.010	1	1	1			

Table V-8 (Continued)

FREQUENCY OF OCCURRENCE OF TOXIC POLLUTANTS
ROLL GRINDING SPENT LUBRICANT
RAW WASTEWATER

	Pollutant	Analytical Quantification Level (mg/l)	Number of Streams Analyzed	Number of Samples Analyzed	Number of Times Observed in Samples (mg/l) ND-0.010	0.011-0.100	0.101-1.000	1.000+
79.	benzo(ghi)perylene	0.010	1	1	1			
80.	fluorene	0.010	1	1	1			
81.	phenanthrene (a)	0.010	-	-				
82.	dibenzo(a,h)anthracene	0.010	1	1	1			
83.	indeno (1,2,3-c,d)pyrene	0.010	1	1	1			
84.	pyrene	0.010	1	1	1			
85.	tetrachloroethylene	0.010	1	1	1			
86.	toluene	0.010	1	1	1			
87.	trichloroethylene	0.010	1	1	1			
88.	vinyl chloride (chloroethylene)	0.010	1	1	1			
89.	aldrin	0.005	1	1	1			
90.	dieldrin	0.005	1	1	1			
91.	chlordane	0.005	1	1	1			
92.	4,4'-DDT	0.005	1	1	1			
93.	4,4'-DDE	0.005	1	1	1			
94.	4,4'-DDD	0.005	1	1	1			
95.	alpha-endosulfan	0.005	1	1	1			
96.	beta-endosulfan	0.005	1	1	1			
97.	endosulfan sulfate	0.005	1	1	1			
98.	endrin	0.005	1	1	1			
99.	endrin aldehyde	0.005	1	1	1			
100.	heptachlor	0.005	1	1	1			
101.	heptachlor epoxide	0.005	1	1	1			
102.	alpha-BHC	0.005	1	1	1			
103.	beta-BHC	0.005	1	1	1			
104.	gamma-BHC	0.005	1	1	1			
105.	delta-BHC	0.005	1	1	1			
106.	PCB-1242 (b)	0.005	1	1	1			
107.	PCB-1254 (b)	0.005	-	-				
108.	PCB-1221 (b)	0.005	-	-				
109.	PCB-1232 (b)	0.005	-	-				
110.	PCB-1248 (c)	0.005	1	1	1			
111.	PCB-1260 (c)	0.005	-	-				
112.	PCB-1016 (c)	0.005	-	-				
113.	toxaphene	0.005	1	1	1			
114.	antimony	0.100	0	0				
115.	arsenic	0.010	1	1	1			
116.	asbestos	10 MFL	0	0				

Table V-8 (Continued)

FREQUENCY OF OCCURRENCE OF TOXIC POLLUTANTS
ROLL GRINDING SPENT LUBRICANT
RAW WASTEWATER

Pollutant	Analytical Quantification Level (mg/l)	Number of Streams Analyzed	Number of Samples Analyzed	Number of Times Observed in Samples (mg/l) ND-0.010	0.011-0.100	0.101-1.000	1.000+
117. beryllium	0.010	1	1	1			
118. cadmium	0.002	1	1	1			
119. chromium (total)	0.005	1	1			1	
120. copper	0.009	1	1			1	
121. cyanide (total)	0.100	1	1	1			
122. lead	0.020	1	1	1			
123. mercury	0.0001	1	1	1			
124. nickel	0.005	1	1		1		
125. selenium	0.01	0	0				
126. silver	0.02	0	0				
127. thallium	0.100	0	0				
128. zinc	0.050	1	1	1			
129. 2,3,7,8-tetrachlorodibenzo-p-dioxin	0.005	0	0				

(a), (b), (c) Reported together.

Table V-9

SAMPLING DATA
ROLL GRINDING SPENT EMULSION
RAW WASTEWATER

Pollutant	Stream Code	Sample Type	Source	Concentrations (mg/l) Day 1	Day 2	Day 3	Average
Toxic Pollutants							
2. acrolein	U-7	1	ND	0.050			0.050
119. chromium	U-7	1	<0.001	0.850			0.850
120. copper	U-7	1	0.013	0.150			0.150
122. lead	U-7	1	0.010	0.006			0.006
123. mercury	U-7	1	0.005	0.005			0.005
124. nickel	U-7	1	0.016	0.044			0.044
Nonconventional							
alkalinity	U-7	1		180			180
aluminum	U-7	1	<0.1	<0.1			<0.1
calcium	U-7	1	58.7	69.8			69.8
chemical oxygen demand (COD)	U-7	1		230			230
magnesium	U-7	1	7.44	10.5			10.5
phenol (total; by 4-AAP method)	U-7	1		0.007			0.007
sulfate	U-7	1		59			59
total organic carbon (TOC)	U-7	1		2.5			2.5
Conventional							
oil and grease	U-7	1		107			107
suspended solids	U-7	1		118			118
pH (standard units)	U-7	1	8.0	6.0			

Table V-10

EXTRUSION DIE CLEANING BATH

Plant	Water Use l/kkg	Water Use gal/ton	Percent Recycle	Wastewater l/kkg	Wastewater gal/ton
1	*	*	**	0	0
2	51.87	12.44	**	0	0
3	*	*	**	0	0
4	0.2506	0.0601	**	0.2506	0.0601
5	2.472	0.5929	**	2.060	0.4941
6	2.811	0.6742	**	2.811	0.6742
7	4.009	0.9615	**	3.341	0.8013
8	5.833	1.399	**	5.833	1.399
9	12.52	3.003	**	12.52	3.003
10	13.90	3.333	**	13.90	3.333
11	13.99	3.356	**	13.99	3.356
12	39.68	9.517	**	39.68	9.517
13	53.45	12.82	**	53.45	12.82
14	9.957	2.388	**	*	*

*Data not available.
**Not applicable.

Statistical Summary

Minimum	0.2506	0.0601	0	0
Maximum	53.45	12.82	53.45	12.82
Mean	17.56	4.212	11.37	2.728
Median	11.24	2.696	3.341	0.8013
Sample:	12 of 37 plants		13 of 37 plants	
Nonzero Mean	17.56	4.212	14.79	3.546
Sample:	12 of 37 plants		10 of 37 plants	

Note: Table does not include 23 plants which provided insufficient information to calculate water use and wastewater values.

Table V-11

EXTRUSION DIE CLEANING RINSE

Plant	Water Use l/kkg	Water Use gal/ton	Percent Recycle	Wastewater l/kkg	Wastewater gal/ton
1	*	*	100	0	0
2	0.7025	0.1685	0	0.7025	0.1685
3	4.009	0.9615	*	3.341	0.8013
4	5.833	1.399	0	5.833	1.399
5	8.285	1.987	0	8.285	1.987
6	9.957	2.388	0	9.957	2.388
7	11.78	2.826	0	11.78	2.826
8	*	*	*	18.65	4.473
9	53.45	12.82	0	53.45	12.82
10	155.6	37.33	*	118.6	28.44

*Data not available.

Statistical Summary

Minimum	0.7025	0.1685	0	0
Maximum	155.6	37.33	118.6	28.44
Mean	31.21	7.485	23.06	5.530
Median	9.121	2.188	9.121	2.188
Sample:	8 of 30 plants		10 of 30 plants	
Nonzero Mean	31.21	7.485	25.62	6.145
Sample:	8 of 30 plants		9 of 30 plants	

Note: Table does not include 20 plants which provided insufficient information to calculate water use and wastewater values.

Table V-12

FREQUENCY OF OCCURRENCE OF TOXIC POLLUTANTS
EXTRUSION DIE CLEANING RINSE
RAW WASTEWATER

Pollutant	Analytical Quantification Level (mg/l)	Number of Streams Analyzed	Number of Samples Analyzed	Number of Times Observed in Samples (mg/l)			
				ND-0.010	0.011-0.100	0.101-1.000	1.000+
1. acenaphthene	0.010	2	2	2			
2. acrolein	0.010	2	2	2			
3. acrylonitrile	0.010	2	2	2			
4. benzene	0.010	2	2	2			
5. benzidine	0.010	2	2	2			
6. carbon tetrachloride	0.010	2	2	2			
7. chlorobenzene	0.010	2	2	2			
8. 1,2,4-trichlorobenzene	0.010	2	2	2			
9. hexachlorobenzene	0.010	2	2	2			
10. 1,2-dichloroethane	0.010	2	2	2			
11. 1,1,1-trichloroethane	0.010	2	2	2			
12. hexachloroethane	0.010	2	2	2			
13. 1,1-dichloroethane	0.010	2	2	2			
14. 1,1,2-trichloroethane	0.010	2	2	2			
15. 1,1,2,2-tetrachloroethane	0.010	2	2	2			
16. chloroethane	0.010	2	2	2			
17. bis(chloromethyl)ether	0.010	2	2	2			
18. bis(chloroethyl)ether	0.010	2	2	2			
19. 2-chloroethyl vinyl ether	0.010	2	2	2			
20. 2-chloronaphthalene	0.010	2	2	2			
21. 2,4,6-trichlorophenol	0.010	2	2	2			
22. p-chloro-m-cresol	0.010	2	2	2			
23. chloroform	0.010	2	2	2			
24. 2-chlorophenol	0.010	2	2	2			
25. 1,2-dichlorobenzene	0.010	2	2	2			
26. 1,3-dichlorobenzene	0.010	2	2	2			
27. 1,4-dichlorobenzene	0.010	2	2	2			
28. 3,3'-dichlorobenzidine	0.010	2	2	2			
29. 1,1-dichloroethylene	0.010	2	2	2			
30. 1,2-trans-dichloroethylene	0.010	2	2	2			
31. 2,4-dichlorophenol	0.010	2	2	2			
32. 1,2-dichloropropane	0.010	2	2	2			
33. 1,3-dichloropropene	0.010	2	2	2			
34. 2,4-dimethylphenol	0.010	2	2	2			
35. 2,4-dinitrotoluene	0.010	2	2	2			
36. 2,6-dinitrotoluene	0.010	2	2	2			
37. 1,2-diphenylhydrazine	0.010	2	2	2			
38. ethylbenzene	0.010	2	2	2			
39. fluoranthene	0.010	2	2	2			

Table V-12 (Continued)

FREQUENCY OF OCCURRENCE OF TOXIC POLLUTANTS
EXTRUSION DIE CLEANING RINSE
RAW WASTEWATER

	Pollutant	Analytical Quantification Level (mg/l)	Number of Streams Analyzed	Number of Samples Analyzed	Number of Times Observed in Samples (mg/l) ND-0.010	0.011-0.100	0.101-1.000	1.000+
40.	4-chlorophenyl phenyl ether	0.010	2	2	2			
41.	4-bromophenyl phenyl ether	0.010	2	2	2			
42.	bis(2-chloroisopropyl)ether	0.010	2	2	2			
43.	bis(2-chloroethoxy)methane	0.010	2	2	2			
44.	methylene chloride	0.010	2	2		2		
45.	methyl chloride (chloromethane)	0.010	2	2	2			
46.	methyl bromide (bromomethane)	0.010	2	2	2			
47.	bromoform (tribromomethane)	0.010	2	2	2			
48.	dichlorobromomethane	0.010	2	2	2			
49.	trichlorofluoromethane	0.010	2	2	2			
50.	dichlorodifluoromethane	0.010	2	2	2			
51.	chlorodibromomethane	0.010	2	2	2			
52.	hexachlorobutadiene	0.010	2	2	2			
53.	hexachlorocyclopentadiene	0.010	2	2	2			
54.	isophorone	0.010	2	2	2			
55.	naphthalene	0.010	2	2	2			
56.	nitrobenzene	0.010	2	2	2			
57.	2-nitrophenol	0.010	2	2	2			
58.	4-nitrophenol	0.010	2	2	2			
59.	2,4-dinitrophenol	0.010	2	2	2			
60.	4,6-dinitro-o-cresol	0.010	2	2	2			
61.	N-nitrosodimethylamine	0.010	2	2	2			
62.	N-nitrosodiphenylamine	0.010	2	2	2			
63.	N-nitrosodi-n-propylamine	0.010	2	2	2			
64.	pentachlorophenol	0.010	2	2	2			
65.	phenol	0.010	2	2	2			
66.	bis (2-ethylhexyl) phthalate	0.010	2	2	1	1		
67.	butyl benzyl phthalate	0.010	2	2	2			
68.	di-n-butyl phthalate	0.010	2	2	2			
69.	di-n-octyl phthalate	0.010	2	2	2			
70.	diethyl phthalate	0.010	2	2	2			
71.	dimethyl phthalate	0.010	2	2	2			
72.	benzo(a)anthracene	0.010	2	2	2			
73.	benzo(a)pyrene	0.010	2	2	2			
74.	benzo(b)fluoranthene	0.010	2	2	2			
75.	benzo(k)fluoranthene	0.010	2	2	2			
76.	chrysene	0.010	2	2	2			
77.	acenaphthylene	0.010	2	2	2			
78.	anthracene (a)	0.010	2	2	2			

Table V-12 (Continued)

FREQUENCY OF OCCURRENCE OF TOXIC POLLUTANTS
EXTRUSION DIE CLEANING RINSE
RAW WASTEWATER

	Pollutant	Analytical Quantification Level (mg/l)	Number of Streams Analyzed	Number of Samples Analyzed	Number of Times Observed in Samples (mg/l) ND-0.010	0.011-0.100	0.101-1.000	1.000+
79.	benzo(ghi)perylene	0.010	2	2	2			
80.	fluorene	0.010	2	2	2			
81.	phenanthrene (a)	0.010	-	-				
82.	dibenzo(a,h)anthracene	0.010	2	2	2			
83.	indeno (1,2,3-c,d)pyrene	0.010	2	2	2			
84.	pyrene	0.010	2	2	2			
85.	tetrachloroethylene	0.010	2	2	2			
86.	toluene	0.010	2	2	2			
87.	trichloroethylene	0.010	2	2	2			
88.	vinyl chloride (chloroethylene)	0.010	2	2	2			
89.	aldrin	0.005	2	2	2			
90.	dieldrin	0.005	2	2	2			
91.	chlordane	0.005	2	2	2			
92.	4,4'-DDT	0.005	2	2	2			
93.	4,4'-DDE	0.005	2	2	2			
94.	4,4'-DDD	0.005	2	2	2			
95.	alpha-endosulfan	0.005	2	2	2			
96.	beta-endosulfan	0.005	2	2	2			
97.	endosulfan sulfate	0.005	2	2	2			
98.	endrin	0.005	2	2	2			
99.	endrin aldehyde	0.005	2	2	2			
100.	heptachlor	0.005	2	2	2			
101.	heptachlor epoxide	0.005	2	2	2			
102.	alpha-BHC	0.005	2	2	2			
103.	beta-BHC	0.005	2	2	2			
104.	gamma-BHC	0.005	2	2	2			
105.	delta-BHC	0.005	2	2	2			
106.	PCB-1242 (b)	0.005	2	2	2			
107.	PCB-1254 (b)	0.005	-	-				
108.	PCB-1221 (b)	0.005	-	-				
109.	PCB-1232 (b)	0.005	-	-				
110.	PCB-1248 (c)	0.005	2	2	2			
111.	PCB-1260 (c)	0.005	-	-				
112.	PCB-1016 (c)	0.005	-	-				
113.	toxaphene	0.005	2	2	2			
114.	antimony	0.100	3	5	2	3		
115.	arsenic	0.010	3	5	4	1		
116.	asbestos	10 MFL	0	0				

Table V-12 (Continued)

FREQUENCY OF OCCURRENCE OF TOXIC POLLUTANTS
EXTRUSION DIE CLEANING RINSE
RAW WASTEWATER

Pollutant	Analytical Quantification Level (mg/l)	Number of Streams Analyzed	Number of Samples Analyzed	Number of Times Observed in Samples (mg/l) ND-0.010	0.011-0.100	0.101-1.000	1.000+
117. beryllium	0.010	3	5	5			
118. cadmium	0.002	3	5	3	2		
119. chromium (total)	0.005	3	5	1	4	1	
120. copper	0.009	3	5			4	1
121. cyanide (total)	0.100	3	5	2	3		
122. lead	0.020	3	5			5	
123. mercury	0.0001	3	5	5			
124. nickel	0.005	3	5	4	1		
125. selenium	0.01	3	5	4	1		
126. silver	0.02	3	5	4	1		
127. thallium	0.100	3	5	4	1		
128. zinc	0.050	3	5		2	2	1
129. 2,3,7,8-tetrachlorodibenzo-p-dioxin	0.005	0	0				

(a), (b), (c) Reported together.

Table V-13

SAMPLING DATA
EXTRUSION DIE CLEANING RINSE
RAW WASTEWATER

Pollutant	Stream Code	Sample Type	Source	Concentrations (mg/l) Day 1	Day 2	Day 3	Average
Toxic Pollutants							
4. benzene	F-7	1	ND	ND			
	V-2	1	0.004	0.004			0.004
11. 1,1,1-trichloroethane	F-7	1	ND	ND			
	V-2	1	ND	0.002			0.002
44. methylene chloride	F-7	1	0.024	0.036			0.036
	V-2	1	0.015	0.021			0.021
66. bis(2-ethylhexyl) phthalate	F-7	1	0.025	0.027			0.027
	V-2	1	0.008	0.008			0.008
86. toluene	F-7	1	*	ND			
	V-2	1	0.002	0.002			0.002
114. antimony	F-7	1	<0.1	<0.1			<0.1
	V-2	1	<0.001	0.013			0.013
	W-6	2	0.003	0.035	<0.001	0.015	<0.017
115. arsenic	F-7	1	<0.01	<0.01			<0.01
	V-2	1	<0.005	0.042			0.042
	W-6	2	<0.005	0.004	0.009	<0.005	<0.006
116. cadmium	F-7	1	<0.002	0.020			0.020
	V-2	1	<0.001	0.020			0.020
	W-6	2	<0.001	0.001	<0.001	<0.001	<0.001
119. chromium	F-7	1	<0.005	0.090			0.090
	V-2	1	<0.001	0.210			0.210
	W-6	2	0.004	0.037	0.030	0.045	0.037
120. copper	F-7	1	<0.009	0.200			0.200
	V-2	1	0.027	0.320			0.320
	W-6	2	0.010	2.4	0.930	0.300	1.2
121. cyanide	F-7	1		0.002			0.002
	V-2	1	0.0042	0.0042			0.0042
	W-6	1	0.030	0.015	0.015	0.015	0.015
122. lead	F-7	1	<0.020	0.600			0.600
	V-2	1	0.079	0.270			0.270
	W-6	2	0.009	0.830	0.130	0.550	0.503

Table V-13 (Continued)

SAMPLING DATA
EXTRUSION DIE CLEANING RINSE
RAW WASTEWATER

Pollutant	Stream Code	Sample Type	Source	Concentrations (mg/l) Day 1	Day 2	Day 3	Average
123. mercury	F-7	1	0.0006	0.0007			0.0007
	V-2	1	<0.0002	<0.0002			<0.0002
	W-6	2	<0.002	<0.002	<0.002	<0.002	<0.002
124. nickel	F-7	1	<0.005	<0.005			<0.005
	V-2	1	0.009	0.10			0.10
	W-6	2	0.060	0.010	0.021	<0.009	<0.013
125. selenium	F-7	1	<0.01	<0.01			<0.01
	V-2	1	0.020	<0.005			<0.005
	W-6	2	0.015	0.100	<0.005	<0.005	<0.037
126. silver	F-7	1	<0.02	<0.02			<0.02
	V-2	1	0.05	<0.001			<0.001
	W-6	2	0.02	0.02	<0.001	<0.001	<0.01
127. thallium	F-7	1	<0.1	<0.1			<0.1
	V-2	1	<0.001	<0.001			<0.001
	W-6	2	<0.001	0.002	<0.001	0.057	<0.026
128. zinc	F-7	1	<0.050	0.100			0.100
	V-2	1	0.500	0.100			0.100
	W-6	2	0.030	1.500	0.300	0.26	0.69
Nonconventional							
alkalinity	F-7	1		ND			
	V-2	1		5,400			5,400
	W-6	2	170	3,200	1,700	3,100	2,700
aluminum	F-7	1		430			430
	V-2	1	0.09	48			48
	W-6	2	0.06	4.8	23	0.42	9
calcium	F-7	1		<0.03			<0.03
	V-2	1	9.8	6.9			6.9
	W-6	2	55	55	20	3.7	26
chemical oxygen demand (COD)	F-7	1		12			12
	V-2	1	<1	28			28
	W-6	1	12	20	60	12	31

Table V-13 (Continued)

SAMPLING DATA
EXTRUSION DIE CLEANING RINSE
RAW WASTEWATER

Pollutant	Stream Code	Sample Type	Source	Concentrations (mg/l) Day 1	Day 2	Day 3	Average
dissolved solids	F-7	1		3,237			3,237
	V-2	1		7,200			7,200
	W-6	2	3	3,700	2,200	3,800	3,200
magnesium	F-7	1		0.03			0.03
	V-2	1	63	2.7			2.7
	W-6	2	19	12	11	1.6	8
phenols (total; by 4-AAP method)	F-7	1		0.005			0.005
	V-2	1	0.062	0.019			0.019
	W-6	1	1.0	0.012	0.088	0.060	0.053
sulfate	F-7	1		60			60
	V-2	1		290			290
	W-6	2	81	110	170	180	150
total organic carbon (TOC)	F-7	1		19			19
	V-2	1	4.7	120			120
	W-6	1	0	7	20	11	13
Conventional							
oil and grease	F-7	1		8			8
	V-2	1	16	17			17
	W-6	1	6.6	6.8	<1	<1	<3
suspended solids	F-7	1		28			28
	V-2	1		120			120
	W-6	2	<1	26	130	44	67
pH (standard units)	F-7	1	7.55	10.85			
	V-2	1	7.3	10.3			
	W-6	1	7.7	11.5	11.7	7.8	

Table V-14

EXTRUSION DIE CLEANING SCRUBBER LIQUOR

Plant	Water Use l/kkg	Water Use gal/ton	Percent Recycle	Wastewater l/kkg	Wastewater gal/ton
1	258.8	62.08	0	258.8	62.08
2	292.2	70.08	0	292.2	70.08
Statistical Summary					
Mean	275.5	66.08		275.5	66.08
Sample:	2 of 2 plants			2 of 2 plants	

Table V-15

FREQUENCY OF OCCURRENCE OF TOXIC POLLUTANTS
EXTRUSION DIE CLEANING SCRUBBER LIQUOR
RAW WASTEWATER

	Pollutant	Analytical Quantification Level (mg/l)	Number of Streams Analyzed	Number of Samples Analyzed	Number of Times Observed in Samples (mg/l)			
					ND-0.010	0.011-0.100	0.101-1.000	1.000+
1.	acenaphthene	0.010	0	0				
2.	acrolein	0.010	0	0				
3.	acrylonitrile	0.010	0	0				
4.	benzene	0.010	0	0				
5.	benzidine	0.010	0	0				
6.	carbon tetrachloride	0.010	0	0				
7.	chlorobenzene	0.010	0	0				
8.	1,2,4-trichlorobenzene	0.010	0	0				
9.	hexachlorobenzene	0.010	0	0				
10.	1,2-dichloroethane	0.010	0	0				
11.	1,1,1-trichloroethane	0.010	0	0				
12.	hexachloroethane	0.010	0	0				
13.	1,1-dichloroethane	0.010	0	0				
14.	1,1,2-trichloroethane	0.010	0	0				
15.	1,1,2,2-tetrachloroethane	0.010	0	0				
16.	chloroethane	0.010	0	0				
17.	bis(chloromethyl)ether	0.010	0	0				
18.	bis(chloroethyl)ether	0.010	0	0				
19.	2-chloroethyl vinyl ether	0.010	0	0				
20.	2-chloronaphthalene	0.010	0	0				
21.	2,4,6-trichlorophenol	0.010	0	0				
22.	p-chloro-m-cresol	0.010	0	0				
23.	chloroform	0.010	0	0				
24.	2-chlorophenol	0.010	0	0				
25.	1,2-dichlorobenzene	0.010	0	0				
26.	1,3-dichlorobenzene	0.010	0	0				
27.	1,4-dichlorobenzene	0.010	0	0				
28.	3,3'-dichlorobenzidine	0.010	0	0				
29.	1,1-dichloroethylene	0.010	0	0				
30.	1,2-trans-dichloroethylene	0.010	0	0				
31.	2,4-dichlorophenol	0.010	0	0				
32.	1,2-dichloropropane	0.010	0	0				
33.	1,3-dichloropropene	0.010	0	0				
34.	2,4-dimethylphenol	0.010	0	0				
35.	2,4-dinitrotoluene	0.010	0	0				
36.	2,6-dinitrotoluene	0.010	0	0				
37.	1,2-diphenylhydrazine	0.010	0	0				
38.	ethylbenzene	0.010	0	0				
39.	fluoranthene	0.010	0	0				

Table V-15 (Continued)

FREQUENCY OF OCCURRENCE OF TOXIC POLLUTANTS
EXTRUSION DIE CLEANING SCRUBBER LIQUOR
RAW WASTEWATER

	Pollutant	Analytical Quantification Level (mg/l)	Number of Streams Analyzed	Number of Samples Analyzed	Number of Times Observed in Samples (mg/l)			
					ND-0.010	0.011-0.100	0.101-1.000	1.000+
40.	4-chlorophenyl phenyl ether	0.010	0	0				
41.	4-bromophenyl phenyl ether	0.010	0	0				
42.	bis(2-chloroisopropyl)ether	0.010	0	0				
43.	bis(2-chloroethoxy)methane	0.010	0	0				
44.	methylene chloride	0.010	0	0				
45.	methyl chloride (chloromethane)	0.010	0	0				
46.	methyl bromide (bromomethane)	0.010	0	0				
47.	bromoform (tribromomethane)	0.010	0	0				
48.	dichlorobromomethane	0.010	0	0				
49.	trichlorofluoromethane	0.010	0	0				
50.	dichlorodifluoromethane	0.010	0	0				
51.	chlorodibromomethane	0.010	0	0				
52.	hexachlorobutadiene	0.010	0	0				
53.	hexachlorocyclopentadiene	0.010	0	0				
54.	isophorone	0.010	0	0				
55.	naphthalene	0.010	0	0				
56.	nitrobenzene	0.010	0	0				
57.	2-nitrophenol	0.010	0	0				
58.	4-nitrophenol	0.010	0	0				
59.	2,4-dinitrophenol	0.010	0	0				
60.	4,6-dinitro-o-cresol	0.010	0	0				
61.	N-nitrosodimethylamine	0.010	0	0				
62.	N-nitrosodiphenylamine	0.010	0	0				
63.	N-nitrosodi-n-propylamine	0.010	0	0				
64.	pentachlorophenol	0.010	0	0				
65.	phenol	0.010	0	0				
66.	bis (2-ethylhexyl) phthalate	0.010	0	0				
67.	butyl benzyl phthalate	0.010	0	0				
68.	di-n-butyl phthalate	0.010	0	0				
69.	di-n-octyl phthalate	0.010	0	0				
70.	diethyl phthalate	0.010	0	0				
71.	dimethyl phthalate	0.010	0	0				
72.	benzo(a)anthracene	0.010	0	0				
73.	benzo(a)pyrene	0.010	0	0				
74.	benzo(b)fluoranthene	0.010	0	0				
75.	benzo(k)fluoranthene	0.010	0	0				
76.	chrysene	0.010	0	0				
77.	acenaphthylene	0.010	0	0				
78.	anthracene (a)	0.010	0	0				

Table V-15 (Continued)

FREQUENCY OF OCCURRENCE OF TOXIC POLLUTANTS
EXTRUSION DIE CLEANING SCRUBBER LIQUOR
RAW WASTEWATER

	Pollutant	Analytical Quantification Level (mg/l)	Number of Streams Analyzed	Number of Samples Analyzed	Number of Times Observed in Samples (mg/l) ND-0.010	0.011-0.100	0.101-1.000	1.000+
79.	benzo(ghi)perylene	0.010	0	0				
80.	fluorene	0.010	0	0				
81.	phenanthrene (a)	0.010	-	-				
82.	dibenzo(a,h)anthracene	0.010	0	0				
83.	indeno (1,2,3-c,d)pyrene	0.010	0	0				
84.	pyrene	0.010	0	0				
85.	tetrachloroethylene	0.010	0	0				
86.	toluene	0.010	0	0				
87.	trichloroethylene	0.010	0	0				
88.	vinyl chloride (chloroethylene)	0.010	0	0				
89.	aldrin	0.005	0	0				
90.	dieldrin	0.005	0	0				
91.	chlordane	0.005	0	0				
92.	4,4'-DDT	0.005	0	0				
93.	4,4'-DDE	0.005	0	0				
94.	4,4'-DDD	0.005	0	0				
95.	alpha-endosulfan	0.005	0	0				
96.	beta-endosulfan	0.005	0	0				
97.	endosulfan sulfate	0.005	0	0				
98.	endrin	0.005	0	0				
99.	endrin aldehyde	0.005	0	0				
100.	heptachlor	0.005	0	0				
101.	heptachlor epoxide	0.005	0	0				
102.	alpha-BHC	0.005	0	0				
103.	beta-BHC	0.005	0	0				
104.	gamma-BHC	0.005	0	0				
105.	delta-BHC	0.005	0	0				
106.	PCB-1242 (b)	0.005	0	0				
107.	PCB-1254 (b)	0.005	-	-				
108.	PCB-1221 (b)	0.005	-	-				
109.	PCB-1232 (b)	0.005	-	-				
110.	PCB-1248 (c)	0.005	0	0				
111.	PCB-1260 (c)	0.005	-	-				
112.	PCB-1016 (c)	0.005	-	-				
113.	toxaphene	0.005	0	0				
114.	antimony	0.100	1	3	2	1		
115.	arsenic	0.010	1	3	3			
116.	asbestos	10 MFL	0	0				

Table V-15 (Continued)

FREQUENCY OF OCCURRENCE OF TOXIC POLLUTANTS
EXTRUSION DIE CLEANING SCRUBBER LIQUOR
RAW WASTEWATER

Pollutant	Analytical Quantification Level (mg/l)	Number of Streams Analyzed	Number of Samples Analyzed	Number of Times Observed in Samples (mg/l)			
				ND-0.010	0.011-0.100	0.101-1.000	1.000+
117. beryllium	0.010	1	3	3			
118. cadmium	0.002	1	3	3			
119. chromium (total)	0.005	1	3	3			
120. copper	0.009	1	3	3			
121. cyanide (total)	0.100	1	3		3		
122. lead	0.020	1	3	2	1		
123. mercury	0.0001	1	3	3			
124. nickel	0.005	1	3	3			
125. selenium	0.01	1	3	3			
126. silver	0.02	1	3	3			
127. thallium	0.100	1	3	3			
128. zinc	0.050	1	3		3		
129. 2,3,7,8-tetrachlorodibenzo-p-dioxin	0.005	0	0				

(a), (b), (c) Reported together.

Table V-16

SAMPLING DATA
EXTRUSION DIE CLEANING SCRUBBER LIQUOR
RAW WASTEWATER

Pollutant	Stream Code	Sample Type	Source	Concentrations (mg/l) Day 1	Day 2	Day 3	Average
Toxic Pollutants							
114. antimony	W-5	2	0.003	0.013	<0.001	<0.001	<0.005
118. cadmium	W-5	2	<0.001	<0.001	0.001	<0.001	<0.001
119. chromium	W-5	2	0.004	0.004	0.003	0.003	0.003
120. copper	W-5	2	0.010	0.006	0.006	0.006	0.006
121. cyanide	W-5	1	0.030	0.020	0.013	0.020	0.018
122. lead	W-5	2	0.009	0.005	0.024	0.006	0.012
124. nickel	W-5	2	0.060	<0.001	<0.001	0.003	<0.002
125. selenium	W-5	2	0.015	0.005	0.005	<0.005	<0.005
126. silver	W-5	2	0.02	0.001	<0.001	<0.001	<0.001
127. thallium	W-5	2	<0.001	0.010	<0.001	<0.001	<0.004
128. zinc	W-5	2	0.03	0.04	0.03	0.02	0.03
Nonconventional							
alkalinity	W-5	2	170	200	190	220	203
aluminum	W-5	2	0.06	1.3	0.65	0.60	0.9
calcium	W-5	2	55	49	30	30	36
chemical oxygen demand (COD)	W-5	2	12	7.7	7.5	<1	<5
dissolved solids	W-5	2	3	270	300	420	330
magnesium	W-5	2	19	18	16	15	16
phenols (total; by 4-AAP method)	W-5	1	1.00	0.0095	0.095	0.14	0.08
sulfate	W-5	2	81	70	65	80	71
total organic carbon (TOC)	W-5	2	0	5	5	4	5
Conventional							
oil and grease	W-5	1	6.6	160	7.1	5.7	58
suspended solids	W-5	2	<1	1	4	2	2
pH (standard units)	W-5	2	7.7	8.1	8.2	8.3	

Table V-17

EXTRUSION PRESS SCRUBBER LIQUOR

Plant	Water Use l/kkg	Water Use gal/ton	Percent Recycle	Wastewater l/kkg	Wastewater gal/ton
1	2,071	496.7	0	2,071	496.7
2	*	*	*	*	*

*Data not available.

Sample: 1 of 2 plants 1 of 2 plants

Table V-18

FREQUENCY OF OCCURRENCE OF TOXIC POLLUTANTS
EXTRUSION PRESS SCRUBBER LIQUOR
RAW WASTEWATER

	Pollutant	Analytical Quantification Level (mg/l)	Number of Streams Analyzed	Number of Samples Analyzed	Number of Times Observed in Samples (mg/l)			
					ND-0.010	0.011-0.100	0.101-1.000	1.000+
1.	acenaphthene	0.010	0	0				
2.	acrolein	0.010	0	0				
3.	acrylonitrile	0.010	0	0				
4.	benzene	0.010	0	0				
5.	benzidine	0.010	0	0				
6.	carbon tetrachloride	0.010	0	0				
7.	chlorobenzene	0.010	0	0				
8.	1,2,4-trichlorobenzene	0.010	0	0				
9.	hexachlorobenzene	0.010	0	0				
10.	1,2-dichloroethane	0.010	0	0				
11.	1,1,1-trichloroethane	0.010	0	0				
12.	hexachloroethane	0.010	0	0				
13.	1,1-dichloroethane	0.010	0	0				
14.	1,1,2-trichloroethane	0.010	0	0				
15.	1,1,2,2-tetrachloroethane	0.010	0	0				
16.	chloroethane	0.010	0	0				
17.	bis(chloromethyl)ether	0.010	0	0				
18.	bis(chloroethyl)ether	0.010	0	0				
19.	2-chloroethyl vinyl ether	0.010	0	0				
20.	2-chloronaphthalene	0.010	0	0				
21.	2,4,6-trichlorophenol	0.010	0	0				
22.	p-chloro-m-cresol	0.010	0	0				
23.	chloroform	0.010	0	0				
24.	2-chlorophenol	0.010	0	0				
25.	1,2-dichlorobenzene	0.010	0	0				
26.	1,3-dichlorobenzene	0.010	0	0				
27.	1,4-dichlorobenzene	0.010	0	0				
28.	3,3'-dichlorobenzidine	0.010	0	0				
29.	1,1-dichloroethylene	0.010	0	0				
30.	1,2-trans-dichloroethylene	0.010	0	0				
31.	2,4-dichlorophenol	0.010	0	0				
32.	1,2-dichloropropane	0.010	0	0				
33.	1,3-dichloropropene	0.010	0	0				
34.	2,4-dimethylphenol	0.010	0	0				
35.	2,4-dinitrotoluene	0.010	0	0				
36.	2,6-dinitrotoluene	0.010	0	0				
37.	1,2-diphenylhydrazine	0.010	0	0				
38.	ethylbenzene	0.010	0	0				
39.	fluoranthene	0.010	0	0				

Table V-18 (Continued)

FREQUENCY OF OCCURRENCE OF TOXIC POLLUTANTS
EXTRUSION PRESS SCRUBBER LIQUOR
RAW WASTEWATER

Pollutant	Analytical Quantification Level (mg/l)	Number of Streams Analyzed	Number of Samples Analyzed	Number of Times Observed in Samples (mg/l) ND-0.010	0.011-0.100	0.101-1.000	1.000+
40. 4-chlorophenyl phenyl ether	0.010	0	0				
41. 4-bromophenyl phenyl ether	0.010	0	0				
42. bis(2-chloroisopropyl)ether	0.010	0	0				
43. bis(2-chloroethoxy)methane	0.010	0	0				
44. methylene chloride	0.010	0	0				
45. methyl chloride (chloromethane)	0.010	0	0				
46. methyl bromide (bromomethane)	0.010	0	0				
47. bromoform (tribromomethane)	0.010	0	0				
48. dichlorobromomethane	0.010	0	0				
49. trichlorofluoromethane	0.010	0	0				
50. dichlorodifluoromethane	0.010	0	0				
51. chlorodibromomethane	0.010	0	0				
52. hexachlorobutadiene	0.010	0	0				
53. hexachlorocyclopentadiene	0.010	0	0				
54. isophorone	0.010	0	0				
55. naphthalene	0.010	0	0				
56. nitrobenzene	0.010	0	0				
57. 2-nitrophenol	0.010	0	0				
58. 4-nitrophenol	0.010	0	0				
59. 2,4-dinitrophenol	0.010	0	0				
60. 4,6-dinitro-o-cresol	0.010	0	0				
61. N-nitrosodimethylamine	0.010	0	0				
62. N-nitrosodiphenylamine	0.010	0	0				
63. N-nitrosodi-n-propylamine	0.010	0	0				
64. pentachlorophenol	0.010	0	0				
65. phenol	0.010	0	0				
66. bis (2-ethylhexyl) phthalate	0.010	0	0				
67. butyl benzyl phthalate	0.010	0	0				
68. di-n-butyl phthalate	0.010	0	0				
69. di-n-octyl phthalate	0.010	0	0				
70. diethyl phthalate	0.010	0	0				
71. dimethyl phthalate	0.010	0	0				
72. benzo(a)anthracene	0.010	0	0				
73. benzo(a)pyrene	0.010	0	0				
74. benzo(b)fluoranthene	0.010	0	0				
75. benzo(k)fluoranthene	0.010	0	0				
76. chrysene	0.010	0	0				
77. acenaphthylene	0.010	0	0				
78. anthracene (a)	0.010	0	0				

Table V-18 (Continued)

FREQUENCY OF OCCURRENCE OF TOXIC POLLUTANTS
EXTRUSION PRESS SCRUBBER LIQUOR
RAW WASTEWATER

	Pollutant	Analytical Quantification Level (mg/l)	Number of Streams Analyzed	Number of Samples Analyzed	Number of Times Observed in Samples (mg/l) ND-0.010	0.011-0.100	0.101-1.000	1.000+
79.	benzo(ghi)perylene	0.010	0	0				
80.	fluorene	0.010	0	0				
81.	phenanthrene (a)	0.010	-	-				
82.	dibenzo(a,h)anthracene	0.010	0	0				
83.	indeno (1,2,3-c,d)pyrene	0.010	0	0				
84.	pyrene	0.010	0	0				
85.	tetrachloroethylene	0.010	0	0				
86.	toluene	0.010	0	0				
87.	trichloroethylene	0.010	0	0				
88.	vinyl chloride (chloroethylene)	0.010	0	0				
89.	aldrin	0.005	0	0				
90.	dieldrin	0.005	0	0				
91.	chlordane	0.005	0	0				
92.	4,4'-DDT	0.005	0	0				
93.	4,4'-DDE	0.005	0	0				
94.	4,4'-DDD	0.005	0	0				
95.	alpha-endosulfan	0.005	0	0				
96.	beta-endosulfan	0.005	0	0				
97.	endosulfan sulfate	0.005	0	0				
98.	endrin	0.005	0	0				
99.	endrin aldehyde	0.005	0	0				
100.	heptachlor	0.005	0	0				
101.	heptachlor epoxide	0.005	0	0				
102.	alpha-BHC	0.005	0	0				
103.	beta-BHC	0.005	0	0				
104.	gamma-BHC	0.005	0	0				
105.	delta-BHC	0.005	0	0				
106.	PCB-1242 (b)	0.005	0	0				
107.	PCB-1254 (b)	0.005	-	-				
108.	PCB-1221 (b)	0.005	-	-				
109.	PCB-1232 (b)	0.005	-	-				
110.	PCB-1248 (c)	0.005	0	0				
111.	PCB-1260 (c)	0.005	-	-				
112.	PCB-1016 (c)	0.005	-	-				
113.	toxaphene	0.005	0	0				
114.	antimony	0.100	1	3	2	1		
115.	arsenic	0.010	1	3	3			
116.	asbestos	10 MFL	0	0				

Table V-18 (Continued)

FREQUENCY OF OCCURRENCE OF TOXIC POLLUTANTS
EXTRUSION PRESS SCRUBBER LIQUOR
RAW WASTEWATER

Pollutant	Analytical Quantification Level (mg/l)	Number of Streams Analyzed	Number of Samples Analyzed	Number of Times Observed in Samples (mg/l)			
				ND-0.010	0.011-0.100	0.101-1.000	1.000+
117. beryllium	0.010	1	3	3			
118. cadmium	0.002	1	3	3			
119. chromium (total)	0.005	1	3	3			
120. copper	0.009	1	3	1	2		
121. cyanide (total)	0.100	1	3		3		
122. lead	0.020	1	3	2	1		
123. mercury	0.0001	1	3	3			
124. nickel	0.005	1	3	3			
125. selenium	0.01	1	3	2	1		
126. silver	0.02	1	3	3			
127. thallium	0.100	1	3	2	1		
128. zinc	0.050	1	3		3		
129. 2,3,7,8-tetrachlorodibenzo-p-dioxin	0.005	0	0				

(a), (b), (c) Reported together.

Table V-19

SAMPLING DATA
EXTRUSION PRESS SCRUBBER LIQUOR
RAW WASTEWATER

Pollutant	Stream Code	Sample Type	Source	Concentrations (mg/l) Day 1	Day 2	Day 3	Average
Toxic Pollutants							
114. antimony	W-7	2	0.003	0.005	0.002	0.013	0.007
115. arsenic	W-7	2	<0.005	0.003	<0.005	<0.005	<0.004
116. cadmium	W-7	2	<0.001	<0.001	<0.001	0.001	<0.001
119. chromium	W-7	2	0.004	0.006	0.002	0.005	0.004
120. copper	W-7	2	0.010	0.056	0.005	0.012	0.024
121. cyanide	W-7	1	0.030	0.020	0.022	0.013	0.018
122. lead	W-7	2	0.009	0.059	0.010	0.006	0.025
123. mercury	W-7	2	<0.002	<0.0002	<0.0002	0.0002	<0.0002
125. selenium	W-7	2	0.015	<0.005	0.021	0.005	<0.010
127. thallium	W-7	2	<0.001	<0.001	<0.001	0.012	<0.005
128. zinc	W-7	2	0.03	0.05	0.05	0.04	0.05
Nonconventional							
alkalinity	W-7	2	170	200	190	220	203
aluminum	W-7	2	0.06	0.40	5.7	0.30	2.1
calcium	W-7	2	55	30	31	30	30
chemical oxygen demand (COD)	W-7	2	12	16	100	7.9	41
dissolved solids	W-7	2	3	400	240	430	360
magnesium	W-7	2	19	17	19	16	17
phenols (total; by 4-AAP method)	W-7	1	1.0	0.011	0.012	0.012	0.012
sulfate	W-7	2	81	72	86	80	79
total organic carbon (TOC)	W-7	2	0	2	8	15	8
Conventional							
oil and grease	W-7	1	6.6	5.6	6.9	9.3	7.3
suspended solids	W-7	2	<1	3	6	5	5
pH (standard units)	W-7		7.7	8.4	8.3	8.1	

Table V-20

EXTRUSION DUMMY BLOCK CONTACT COOLING WATER

Plant	Water Use l/kkg	Water Use gal/ton	Percent Recycle	Wastewater l/kkg	Wastewater gal/ton
1	2,072	497.0	0	2,072	497.0
2	2,172	521.0	0	2,172	521.0
3	*	*	0	*	*

*Data not available.

Statistical Summary

Mean	2,122	509.0	2,122	509.0
Sample:	2 of 3 plants		2 of 3 plants	

Table V-21

FREQUENCY OF OCCURRENCE OF TOXIC POLLUTANTS
EXTRUSION DUMMY BLOCK CONTACT COOLING WATER
RAW WASTEWATER

	Pollutant	Analytical Quantification Level (mg/l)	Number of Streams Analyzed	Number of Samples Analyzed	Number of Times Observed in Samples (mg/l) ND-0.010	0.011-0.100	0.101-1.000	1.000+
1.	acenaphthene	0.010	1	1	1			
2.	acrolein	0.010	1	1	1			
3.	acrylonitrile	0.010	1	1	1			
4.	benzene	0.010	1	1	1			
5.	benzidine	0.010	1	1	1			
6.	carbon tetrachloride	0.010	1	1	1			
7.	chlorobenzene	0.010	1	1	1			
8.	1,2,4-trichlorobenzene	0.010	1	1	1			
9.	hexachlorobenzene	0.010	1	1	1			
10.	1,2-dichloroethane	0.010	1	1	1			
11.	1,1,1-trichloroethane	0.010	1	1	1			
12.	hexachloroethane	0.010	1	1	1			
13.	1,1-dichloroethane	0.010	1	1	1			
14.	1,1,2-trichloroethane	0.010	1	1	1			
15.	1,1,2,2-tetrachloroethane	0.010	1	1	1			
16.	chloroethane	0.010	1	1	1			
17.	bis(chloromethyl)ether	0.010	1	1	1			
18.	bis(chloroethyl)ether	0.010	1	1	1			
19.	2-chloroethyl vinyl ether	0.010	1	1	1			
20.	2-chloronaphthalene	0.010	1	1	1			
21.	2,4,6-trichlorophenol	0.010	1	1	1			
22.	p-chloro-m-cresol	0.010	1	1	1			
23.	chloroform	0.010	1	1		1		
24.	2-chlorophenol	0.010	1	1	1			
25.	1,2-dichlorobenzene	0.010	1	1	1			
26.	1,3-dichlorobenzene	0.010	1	1	1			
27.	1,4-dichlorobenzene	0.010	1	1	1			
28.	3,3'-dichlorobenzidine	0.010	1	1	1			
29.	1,1-dichloroethylene	0.010	1	1	1			
30.	1,2-trans-dichloroethylene	0.010	1	1	1			
31.	2,4-dichlorophenol	0.010	1	1	1			
32.	1,2-dichloropropane	0.010	1	1	1			
33.	1,3-dichloropropene	0.010	1	1	1			
34.	2,4-dimethylphenol	0.010	1	1	1			
35.	2,4-dinitrotoluene	0.010	1	1	1			
36.	2,6-dinitrotoluene	0.010	1	1	1			
37.	1,2-diphenylhydrazine	0.010	1	1	1			
38.	ethylbenzene	0.010	1	1	1			
39.	fluoranthene	0.010	1	1	1			

Table V-21 (Continued)

FREQUENCY OF OCCURRENCE OF TOXIC POLLUTANTS
EXTRUSION DUMMY BLOCK CONTACT COOLING WATER
RAW WASTEWATER

	Pollutant	Analytical Quantification Level (mg/l)	Number of Streams Analyzed	Number of Samples Analyzed	Number of Times Observed in Samples (mg/l)			
					ND-0.010	0.011-0.100	0.101-1.000	1.000+
40.	4-chlorophenyl phenyl ether	0.010	1	1	1			
41.	4-bromophenyl phenyl ether	0.010	1	1	1			
42.	bis(2-chloroisopropyl)ether	0.010	1	1	1			
43.	bis(2-chloroethoxy)methane	0.010	1	1	1			
44.	methylene chloride	0.010	1	1	1			
45.	methyl chloride (chloromethane)	0.010	1	1	1			
46.	methyl bromide (bromomethane)	0.010	1	1	1			
47.	bromoform (tribromomethane)	0.010	1	1	1			
48.	dichlorobromomethane	0.010	1	1	1			
49.	trichlorofluoromethane	0.010	1	1	1			
50.	dichlorodifluoromethane	0.010	1	1	1			
51.	chlorodibromomethane	0.010	1	1	1			
52.	hexachlorobutadiene	0.010	1	1	1			
53.	hexachlorocyclopentadiene	0.010	1	1	1			
54.	isophorone	0.010	1	1	1			
55.	naphthalene	0.010	1	1	1			
56.	nitrobenzene	0.010	1	1	1			
57.	2-nitrophenol	0.010	1	1	1			
58.	4-nitrophenol	0.010	1	1	1			
59.	2,4-dinitrophenol	0.010	1	1	1			
60.	4,6-dinitro-o-cresol	0.010	1	1	1			
61.	N-nitrosodimethylamine	0.010	1	1	1			
62.	N-nitrosodiphenylamine	0.010	1	1	1			
63.	N-nitrosodi-n-propylamine	0.010	1	1	1			
64.	pentachlorophenol	0.010	1	1	1			
65.	phenol	0.010	1	1	1			
66.	bis (2-ethylhexyl) phthalate	0.010	1	1	1			
67.	butyl benzyl phthalate	0.010	1	1	1			
68.	di-n-butyl phthalate	0.010	1	1	1			
69.	di-n-octyl phthalate	0.010	1	1	1			
70.	diethyl phthalate	0.010	1	1	1			
71.	dimethyl phthalate	0.010	1	1	1			
72.	benzo(a)anthracene	0.010	1	1	1			
73.	benzo(a)pyrene	0.010	1	1	1			
74.	benzo(b)fluoranthene	0.010	1	1	1			
75.	benzo(k)fluoranthene	0.010	1	1	1			
76.	chrysene	0.010	1	1	1			
77.	acenaphthylene	0.010	1	1	1			
78.	anthracene (a)	0.010	1	1	1			

Table V-21 (Continued)

FREQUENCY OF OCCURRENCE OF TOXIC POLLUTANTS
EXTRUSION DUMMY BLOCK CONTACT COOLING WATER
RAW WASTEWATER

	Pollutant	Analytical Quantification Level (mg/l)	Number of Streams Analyzed	Number of Samples Analyzed	Number of Times Observed in Samples (mg/l) ND-0.010	0.011-0.100	0.101-1.000	1.000+
79.	benzo(ghi)perylene	0.010	1	1	1			
80.	fluorene	0.010	1	1	1			
81.	phenanthrene (a)	0.010	-	-				
82.	dibenzo(a,h)anthracene	0.010	1	1	1			
83.	indeno (1,2,3-c,d)pyrene	0.010	1	1	1			
84.	pyrene	0.010	1	1	1			
85.	tetrachloroethylene	0.010	1	1	1			
86.	toluene	0.010	1	1	1			
87.	trichloroethylene	0.010	1	1	1			
88.	vinyl chloride (chloroethylene)	0.010	1	1	1			
89.	aldrin	0.005	1	1	1			
90.	dieldrin	0.005	1	1	1			
91.	chlordane	0.005	1	1	1			
92.	4,4'-DDT	0.005	1	1	1			
93.	4,4'-DDE	0.005	1	1	1			
94.	4,4'-DDD	0.005	1	1	1			
95.	alpha-endosulfan	0.005	1	1	1			
96.	beta-endosulfan	0.005	1	1	1			
97.	endosulfan sulfate	0.005	1	1	1			
98.	endrin	0.005	1	1	1			
99.	endrin aldehyde	0.005	1	1	1			
100.	heptachlor	0.005	1	1	1			
101.	heptachlor epoxide	0.005	1	1	1			
102.	alpha-BHC	0.005	1	1	1			
103.	beta-BHC	0.005	1	1	1			
104.	gamma-BHC	0.005	1	1	1			
105.	delta-BHC	0.005	1	1	1			
106.	PCB-1242 (b)	0.005	1	1	1			
107.	PCB-1254 (b)	0.005	-	-				
108.	PCB-1221 (b)	0.005	-	-				
109.	PCB-1232 (b)	0.005	-	-				
110.	PCB-1248 (c)	0.005	1	1	1			
111.	PCB-1260 (c)	0.005	-	-				
112.	PCB-1016 (c)	0.005	-	-				
113.	toxaphene	0.005	1	1	1			
114.	antimony	0.100	1	1	1			
115.	arsenic	0.010	1	1	1			
116.	asbestos	10 MFL	0	0				

Table V-21 (Continued)

FREQUENCY OF OCCURRENCE OF TOXIC POLLUTANTS
EXTRUSION DUMMY BLOCK CONTACT COOLING WATER
RAW WASTEWATER

Pollutant	Analytical Quantification Level (mg/l)	Number of Streams Analyzed	Number of Samples Analyzed	Number of Times Observed in Samples (mg/l)			
				ND-0.010	0.011-0.100	0.101-1.000	1.000+
117. beryllium	0.010	1	1	1			
118. cadmium	0.002	1	1	1			
119. chromium (total)	0.005	1	1	1			
120. copper	0.009	1	1	1			
121. cyanide (total)	0.100	1	1	1			
122. lead	0.020	1	1	1			
123. mercury	0.0001	1	1	1			
124. nickel	0.005	1	1	1			
125. selenium	0.01	0	0				
126. silver	0.02	0	0				
127. thallium	0.100	0	0				
128. zinc	0.050	1	1	1			
129. 2,3,7,8-tetrachlorodibenzo-p-dioxin	0.005	0	0				

(a), (b), (c) Reported together.

Table V-22

SAMPLING DATA
EXTRUSION DUMMY BLOCK COOLING
RAW WASTEWATER

Pollutant	Stream Code	Sample Type	Source	Concentrations (mg/l) Day 1	Day 2	Day 3	Average
Toxic Pollutants							
23. chloroform	L-4	1	0.100	0.080			0.080
Nonconventional							
alkalinity	L-4	2		32			32
aluminum	L-4	2	<0.5	<0.5			<0.5
calcium	L-4	2	9	10			10
chemical oxygen demand (COD)	L-4	2	<5	<5			<5
dissolved solids	L-4	2		50			50
magnesium	L-4	2	2.24	2.1			2.1
phenols (total; by 4-AAP method)	L-4	2		0.002			0.002
sulfate	L-4	2		72			72
total organic carbon (TOC)	L-4	2	2.8	2.40			2.40
Conventional							
oil and grease	L-4	1		74			74
suspended solids	L-4	2	<2	<2			<2
pH (standard units)	L-4	2		7.8			

Table V-23

DRAWING WITH NEAT OILS SPENT LUBRICANT

Plant	Water Use 1/kkg	Water Use gal/ton	Percent Recycle	Wastewater 1/kkg	Wastewater gal/ton
1	*	*	100	0	0
2	*	*	100	0	0
3	*	*	*	5.420	1.300
4	*	*	*	8.147	1.954
5	5.879	1.410	*	*	*

*Data not available.

Statistical Summary

Minimum	0	0
Maximum	8.147	1.954
Mean	3.392	0.8135
Median	2.710	0.6500
Sample:	4 of 66 plants	
Nonzero Mean	6.784	1.627
Sample:	2 of 66 plants	

Note: Table does not include 61 plants which provided insufficient information to calculate water use and wastewater values.

Table V-24

DRAWING WITH EMULSIONS OR SOAPS SPENT EMULSION

Plant	Water Use l/kkg	Water Use gal/ton	Percent Recycle	Wastewater l/kkg	Wastewater gal/ton
1	*	*	*	0	0
2	*	*	P	3.377	0.8100
3	*	*	P	11.72	2.810
4	*	*	P	26.18	6.279
5	*	*	P	260.6	62.50
6	*	*	*	1,084	260.0
7	*	*	99 P	1,113	267.0
8	1,072,000	257,100	0	1,072,000	257,100
9	*	*	*	*	*
10	*	*	*	*	*
11	*	*	*	*	*
12	*	*	*	*	*
13	*	*	*	*	*

*Data not available.
P Periodic discharge.

Statistical Summary

Minimum	0	0
Maximum	1,072,000	257,100
Mean	134,300	32,210
Median	143.4	34.39
Sample:	8 of 13 plants	
Nonzero Mean	153,500	36,810
Sample:	7 of 13 plants	
Nonzero Mean with Recycle	416.5	99.90
Sample:	6 of 13 plants	

Table V-25

FREQUENCY OF OCCURRENCE OF TOXIC POLLUTANTS
DRAWING WITH EMULSIONS OR SOAPS SPENT EMULSION
RAW WASTEWATER

	Pollutant	Analytical Quantification Level (mg/l)	Number of Streams Analyzed	Number of Samples Analyzed	Number of Times Observed in Samples (mg/l) ND-0.010	0.011-0.100	0.101-1.000	1.000+
1.	acenaphthene	0.010	1	1	1			
2.	acrolein	0.010	0	0				
3.	acrylonitrile	0.010	0	0				
4.	benzene	0.010	0	0				
5.	benzidine	0.010	1	1	1			
6.	carbon tetrachloride	0.010	0	0				
7.	chlorobenzene	0.010	0	0				
8.	1,2,4-trichlorobenzene	0.010	1	1	1			
9.	hexachlorobenzene	0.010	1	1	1			
10.	1,2-dichloroethane	0.010	0	0				
11.	1,1,1-trichloroethane	0.010	0	0				
12.	hexachloroethane	0.010	1	1	1			
13.	1,1-dichloroethane	0.010	0	0				
14.	1,1,2-trichloroethane	0.010	0	0				
15.	1,1,2,2-tetrachloroethane	0.010	0	0				
16.	chloroethane	0.010	0	0				
17.	bis(chloromethyl)ether	0.010	1	1	1			
18.	bis(chloroethyl)ether	0.010	1	1	1			
19.	2-chloroethyl vinyl ether	0.010	0	0				
20.	2-chloronaphthalene	0.010	1	1	1			
21.	2,4,6-trichlorophenol	0.010	1	1	1			
22.	p-chloro-m-cresol	0.010	1	1		1		
23.	chloroform	0.010	0	0				
24.	2-chlorophenol	0.010	1	1			1	
25.	1,2-dichlorobenzene	0.010	1	1	1			
26.	1,3-dichlorobenzene	0.010	1	1	1			
27.	1,4-dichlorobenzene	0.010	1	1	1			
28.	3,3'-dichlorobenzidine	0.010	1	1	1			
29.	1,1-dichloroethylene	0.010	0	0				
30.	1,2-trans-dichloroethylene	0.010	0	0				
31.	2,4-dichlorophenol	0.010	1	1	1			
32.	1,2-dichloropropane	0.010	0	0				
33.	1,3-dichloropropene	0.010	0	0				
34.	2,4-dimethylphenol	0.010	1	1	1			
35.	2,4-dinitrotoluene	0.010	1	1		1		
36.	2,6-dinitrotoluene	0.010	1	1	1			
37.	1,2-diphenylhydrazine	0.010	1	1		1		
38.	ethylbenzene	0.010	0	0				
39.	fluoranthene	0.010	1	1	1			

Table V-25 (Continued)

FREQUENCY OF OCCURRENCE OF TOXIC POLLUTANTS
DRAWING WITH EMULSIONS OR SOAPS SPENT EMULSION
RAW WASTEWATER

	Pollutant	Analytical Quantification Level (mg/l)	Number of Streams Analyzed	Number of Samples Analyzed	Number of Times Observed in Samples (mg/l) ND-0.010	0.011-0.100	0.101-1.000	1.000+
40.	4-chlorophenyl phenyl ether	0.010	1	1	1			
41.	4-bromophenyl phenyl ether	0.010	1	1	1			
42.	bis(2-chloroisopropyl)ether	0.010	1	1	1			
43.	bis(2-chloroethoxy)methane	0.010	1	1	1			
44.	methylene chloride	0.010	0	0				
45.	methyl chloride (chloromethane)	0.010	0	0				
46.	methyl bromide (bromomethane)	0.010	0	0				
47.	bromoform (tribromomethane)	0.010	0	0				
48.	dichlorobromomethane	0.010	0	0				
49.	trichlorofluoromethane	0.010	0	0				
50.	dichlorodifluoromethane	0.010	0	0				
51.	chlorodibromomethane	0.010	0	0				
52.	hexachlorobutadiene	0.010	1	1	1			
53.	hexachlorocyclopentadiene	0.010	1	1	1			
54.	isophorone	0.010	1	1		1		
55.	naphthalene	0.010	1	1	1			
56.	nitrobenzene	0.010	1	1	1			
57.	2-nitrophenol	0.010	1	1	1			
58.	4-nitrophenol	0.010	1	1	1			
59.	2,4-dinitrophenol	0.010	1	1	1			
60.	4,6-dinitro-o-cresol	0.010	1	1	1			
61.	N-nitrosodimethylamine	0.010	1	1	1			
62.	N-nitrosodiphenylamine	0.010	1	1	1			
63.	N-nitrosodi-n-propylamine	0.010	1	1	1			
64.	pentachlorophenol	0.010	1	1	1			
65.	phenol	0.010	1	1	1			
66.	bis (2-ethylhexyl) phthalate	0.010	1	1		1		
67.	butyl benzyl phthalate	0.010	1	1	1			
68.	di-n-butyl phthalate	0.010	1	1		1		
69.	di-n-octyl phthalate	0.010	1	1		1		
70.	diethyl phthalate	0.010	1	1	1			
71.	dimethyl phthalate	0.010	1	1	1			
72.	benzo(a)anthracene	0.010	1	1	1			
73.	benzo(a)pyrene	0.010	1	1	1			
74.	benzo(b)fluoranthene	0.010	1	1	1			
75.	benzo(k)fluoranthene	0.010	1	1	1			
76.	chrysene	0.010	1	1	1			
77.	acenaphthylene	0.010	1	1	1			
78.	anthracene (a)	0.010	1	1	1			

Table V-25 (Continued)

FREQUENCY OF OCCURRENCE OF TOXIC POLLUTANTS
DRAWING WITH EMULSIONS OR SOAPS SPENT EMULSION
RAW WASTEWATER

	Pollutant	Analytical Quantification Level (mg/l)	Number of Streams Analyzed	Number of Samples Analyzed	Number of Times Observed in Samples (mg/l) ND-0.010	0.011-0.100	0.101-1.000	1.000+
79.	benzo(ghi)perylene	0.010	1	1	1			
80.	fluorene	0.010	1	1	1			
81.	phenanthrene (a)	0.010	-	-				
82.	dibenzo(a,h)anthracene	0.010	1	1	1			
83.	indeno (1,2,3-c,d)pyrene	0.010	1	1	1			
84.	pyrene	0.010	1	1	1			
85.	tetrachloroethylene	0.010	0	0				
86.	toluene	0.010	0	0				
87.	trichloroethylene	0.010	0	0				
88.	vinyl chloride (chloroethylene)	0.010	0	0				
89.	aldrin	0.005	1	1	1			
90.	dieldrin	0.005	1	1	1			
91.	chlordane	0.005	1	1	1			
92.	4,4'-DDT	0.005	1	1	1			
93.	4,4'-DDE	0.005	1	1	1			
94.	4,4'-DDD	0.005	1	1	1			
95.	alpha-endosulfan	0.005	1	1	1			
96.	beta-endosulfan	0.005	1	1	1			
97.	endosulfan sulfate	0.005	1	1	1			
98.	endrin	0.005	1	1	1			
99.	endrin aldehyde	0.005	1	1	1			
100.	heptachlor	0.005	1	1	1			
101.	heptachlor epoxide	0.005	1	1	1			
102.	alpha-BHC	0.005	1	1	1			
103.	beta-BHC	0.005	1	1	1			
104.	gamma-BHC	0.005	1	1	1			
105.	delta-BHC	0.005	1	1	1			
106.	PCB-1242 (b)	0.005	1	1	1			
107.	PCB-1254 (b)	0.005	-	-				
108.	PCB-1221 (b)	0.005	-	-				
109.	PCB-1232 (b)	0.005	-	-				
110.	PCB-1248 (c)	0.005	1	1	1			
111.	PCB-1260 (c)	0.005	-	-				
112.	PCB-1016 (c)	0.005	-	-				
113.	toxaphene	0.005	1	1	1			
114.	antimony	0.100	0	0				
115.	arsenic	0.010	0	0				
116.	asbestos	10 MFL	0	0				

Table V-25 (Continued)

FREQUENCY OF OCCURRENCE OF TOXIC POLLUTANTS
DRAWING WITH EMULSIONS OR SOAPS SPENT EMULSION
RAW WASTEWATER

Pollutant	Analytical Quantification Level (mg/l)	Number of Streams Analyzed	Number of Samples Analyzed	Number of Times Observed in Samples (mg/l)			
				ND-0.010	0.011-0.100	0.101-1.000	1.000+
117. beryllium	0.010	0	0				
118. cadmium	0.002	0	0				
119. chromium (total)	0.005	0	0				
120. copper	0.009	0	0				
121. cyanide (total)	0.100	0	0				
122. lead	0.020	0	0				
123. mercury	0.0001	0	0				
124. nickel	0.005	0	0				
125. selenium	0.01	0	0				
126. silver	0.02	0	0				
127. thallium	0.100	0	0				
128. zinc	0.050	0	0				
129. 2,3,7,8-tetrachlorodibenzo-p-dioxin	0.005	0	0				

(a), (b), (c) Reported together.

Table V-26

SAMPLING DATA
DRAWING WITH EMULSIONS OR SOAPS SPENT EMULSION
RAW WASTEWATER

Pollutant	Stream Code	Sample Type	Source	Concentrations (mg/l) Day 1	Day 2	Day 3	Average
Toxic Pollutants							
22. p-chloro-m-cresol	S-2	1	ND	0.028			0.028
24. 2-chlorophenol	S-2	1	ND	0.130			0.130
35. 2,4-dinitrotoluene	S-2	1	ND	0.077			0.077
37. 1,2-diphenylhydrazine	S-2	1	ND	0.071			0.071
54. isophorone	S-2	1	ND	0.039			0.039
66. bis(2-ethylhexyl) phthalate	S-2	1	*	0.034			0.034
68. di-n-butyl phthalate	S-2	1	ND	0.023			0.023
69. di-n-octyl phthalate	S-2	1	*	0.023			0.023
Conventional							
oil and grease	S-2	1	5	51,540			51,540

Table V-27

SAWING SPENT LUBRICANT

Plant	Water Use l/kkg	Water Use gal/ton	Percent Recycle	Wastewater l/kkg	Wastewater gal/ton
1	0.5212	0.1250	0	0	0
2	*	*	*	0.4586	0.0110
3	*	*	*	0.6671	0.1600
4	*	*	*	1.167	0.2800
5	1.438	0.3450	0	1.438	0.3450
6	*	*	*	6.379	1.530
7	*	*	*	19.14	4.590
8	*	*	*	*	*
9	*	*	*	*	*
10	*	*	*	*	*
11	*	*	*	*	*
12	*	*	*	*	*

*Sufficient data not available to calculate these values.

Statistical Summary

Minimum	0	0
Maximum	19.14	4.590
Mean	4.119	0.9880
Median	1.167	0.2800
Sample:	7 of 12 plants	
Nonzero Mean	4.807	1.153
Sample:	6 of 12 plants	

Table V-28

FREQUENCY OF OCCURRENCE OF TOXIC POLLUTANTS
DEGREASING SPENT SOLVENTS
RAW WASTEWATER

	Pollutant	Analytical Quantification Level (mg/l)	Number of Streams Analyzed	Number of Samples Analyzed	Number of Times Observed in Samples (mg/l)			
					ND-0.010	0.011-0.100	0.101-1.000	1.000+
1.	acenaphthene	0.010	1	1	1			
2.	acrolein	0.010	1	1	1			
3.	acrylonitrile	0.010	1	1	1			
4.	benzene	0.010	1	1	1			
5.	benzidine	0.010	1	1	1			
6.	carbon tetrachloride	0.010	1	1	1			
7.	chlorobenzene	0.010	1	1	1			
8.	1,2,4-trichlorobenzene	0.010	1	1	1			
9.	hexachlorobenzene	0.010	1	1	1			
10.	1,2-dichloroethane	0.010	1	1	1			
11.	1,1,1-trichloroethane	0.010	1	1	1			
12.	hexachloroethane	0.010	1	1	1			
13.	1,1-dichloroethane	0.010	1	1	1			
14.	1,1,2-trichloroethane	0.010	1	1	1			
15.	1,1,2,2-tetrachloroethane	0.010	1	1	1			
16.	chloroethane	0.010	1	1	1			
17.	bis(chloromethyl)ether	0.010	1	1	1			
18.	bis(chloroethyl)ether	0.010	1	1	1			
19.	2-chloroethyl vinyl ether	0.010	1	1	1			
20.	2-chloronaphthalene	0.010	1	1	1			
21.	2,4,6-trichlorophenol	0.010	1	1	1			
22.	p-chloro-m-cresol	0.010	1	1	1			
23.	chloroform	0.010	1	1	1			
24.	2-chlorophenol	0.010	1	1	1			
25.	1,2-dichlorobenzene	0.010	1	1	1			
26.	1,3-dichlorobenzene	0.010	1	1	1			
27.	1,4-dichlorobenzene	0.010	1	1	1			
28.	3,3'-dichlorobenzidine	0.010	1	1	1			
29.	1,1-dichloroethylene	0.010	1	1	1			
30.	1,2-trans-dichloroethylene	0.010	1	1	1			
31.	2,4-dichlorophenol	0.010	1	1	1			
32.	1,2-dichloropropane	0.010	1	1	1			
33.	1,3-dichloropropene	0.010	1	1	1			
34.	2,4-dimethylphenol	0.010	1	1	1			
35.	2,4-dinitrotoluene	0.010	1	1	1			
36.	2,6-dinitrotoluene	0.010	1	1	1			
37.	1,2-diphenylhydrazine	0.010	1	1	1			
38.	ethylbenzene	0.010	1	1	1			
39.	fluoranthene	0.010	1	1	1			

Table V-28 (Continued)

FREQUENCY OF OCCURRENCE OF TOXIC POLLUTANTS
DEGREASING SPENT SOLVENTS
RAW WASTEWATER

	Pollutant	Analytical Quantification Level (mg/l)	Number of Streams Analyzed	Number of Samples Analyzed	Number of Times Observed in Samples (mg/l) ND-0.010	0.011-0.100	0.101-1.000	1.000+
40.	4-chlorophenyl phenyl ether	0.010	1	1	1			
41.	4-bromophenyl phenyl ether	0.010	1	1	1			
42.	bis(2-chloroisopropyl)ether	0.010	1	1	1			
43.	bis(2-chloroethoxy)methane	0.010	1	1	1			
44.	methylene chloride	0.010	1	1	1			
45.	methyl chloride (chloromethane)	0.010	1	1	1			
46.	methyl bromide (bromomethane)	0.010	1	1	1			
47.	bromoform (tribromomethane)	0.010	1	1	1			
48.	dichlorobromomethane	0.010	1	1	1			
49.	trichlorofluoromethane	0.010	1	1	1			
50.	dichlorodifluoromethane	0.010	1	1	1			
51.	chlorodibromomethane	0.010	1	1	1			
52.	hexachlorobutadiene	0.010	1	1	1			
53.	hexachlorocyclopentadiene	0.010	1	1	1			
54.	isophorone	0.010	1	1	1			
55.	naphthalene	0.010	1	1	1			
56.	nitrobenzene	0.010	1	1	1			
57.	2-nitrophenol	0.010	1	1	1			
58.	4-nitrophenol	0.010	1	1	1			
59.	2,4-dinitrophenol	0.010	1	1	1			
60.	4,6-dinitro-o-cresol	0.010	1	1	1			
61.	N-nitrosodimethylamine	0.010	1	1	1			
62.	N-nitrosodiphenylamine	0.010	1	1	1			
63.	N-nitrosodi-n-propylamine	0.010	1	1	1			
64.	pentachlorophenol	0.010	1	1	1			
65.	phenol	0.010	1	1	1			
66.	bis (2-ethylhexyl) phthalate	0.010	1	1	1			
67.	butyl benzyl phthalate	0.010	1	1	1			
68.	di-n-butyl phthalate	0.010	1	1	1			
69.	di-n-octyl phthalate	0.010	1	1	1			
70.	diethyl phthalate	0.010	1	1	1			
71.	dimethyl phthalate	0.010	1	1	1			
72.	benzo(a)anthracene	0.010	1	1	1			
73.	benzo(a)pyrene	0.010	1	1	1			
74.	benzo(b)fluoranthene	0.010	1	1	1			
75.	benzo(k)fluoranthene	0.010	1	1	1			
76.	chrysene	0.010	1	1	1			
77.	acenaphthylene	0.010	1	1	1			
78.	anthracene (a)	0.010	1	1	1			

Table V-28 (Continued)

FREQUENCY OF OCCURRENCE OF TOXIC POLLUTANTS
DEGREASING SPENT SOLVENTS
RAW WASTEWATER

	Pollutant	Analytical Quantification Level (mg/l)	Number of Streams Analyzed	Number of Samples Analyzed	Number of Times Observed in Samples (mg/l) ND-0.010	0.011-0.100	0.101-1.000	1.000+
79.	benzo(ghi)perylene	0.010	1	1	1			
80.	fluorene	0.010	1	1	1			
81.	phenanthrene (a)	0.010	-	-				
82.	dibenzo(a,h)anthracene	0.010	1	1	1			
83.	indeno (1,2,3-c,d)pyrene	0.010	1	1	1			
84.	pyrene	0.010	1	1	1			
85.	tetrachloroethylene	0.010	1	1				1
86.	toluene	0.010	1	1	1			
87.	trichloroethylene	0.010	1	1	1			
88.	vinyl chloride (chloroethylene)	0.010	1	1	1			
89.	aldrin	0.005	1	1	1			
90.	dieldrin	0.005	1	1	1			
91.	chlordane	0.005	1	1	1			
92.	4,4'-DDT	0.005	1	1	1			
93.	4,4'-DDE	0.005	1	1	1			
94.	4,4'-DDD	0.005	1	1	1			
95.	alpha-endosulfan	0.005	1	1	1			
96.	beta-endosulfan	0.005	1	1	1			
97.	endosulfan sulfate	0.005	1	1	1			
98.	endrin	0.005	1	1	1			
99.	endrin aldehyde	0.005	1	1	1			
100.	heptachlor	0.005	1	1	1			
101.	heptachlor epoxide	0.005	1	1	1			
102.	alpha-BHC	0.005	1	1	1			
103.	beta-BHC	0.005	1	1	1			
104.	gamma-BHC	0.005	1	1	1			
105.	delta-BHC	0.005	1	1	1			
106.	PCB-1242 (b)	0.005	1	1	1			
107.	PCB-1254 (b)	0.005	-	-				
108.	PCB-1221 (b)	0.005	-	-				
109.	PCB-1232 (b)	0.005	-	-				
110.	PCB-1248 (c)	0.005	1	1	1			
111.	PCB-1260 (c)	0.005	-	-				
112.	PCB-1016 (c)	0.005	-	-				
113.	toxaphene	0.005	1	1	1			
114.	antimony	0.100	1	1	1			
115.	arsenic	0.010	0	0				
116.	asbestos	10 MFL	0	0				

Table V-28 (Continued)

FREQUENCY OF OCCURRENCE OF TOXIC POLLUTANTS
DEGREASING SPENT SOLVENTS
RAW WASTEWATER

Pollutant	Analytical Quantification Level (mg/l)	Number of Streams Analyzed	Number of Samples Analyzed	Number of Times Observed in Samples (mg/l)			
				ND-0.010	0.011-0.100	0.101-1.000	1.000+
117. beryllium	0.010	1	1	1			
118. cadmium	0.002	1	1	1			
119. chromium (total)	0.005	1	1	1			
120. copper	0.009	1	1				1
121. cyanide (total)	0.100	1	1	1			
122. lead	0.020	1	1		1		
123. mercury	0.0001	1	1	1			
124. nickel	0.005	1	1	1			
125. selenium	0.01	1	1	1			
126. silver	0.02	1	1	1			
127. thallium	0.100	1	1	1			
128. zinc	0.050	1	1		1		
129. 2,3,7,8-tetrachlorodibenzo-p-dioxin	0.005	0	0				

(a), (b), (c) Reported together.

Table V-29

SAMPLING DATA
DEGREASING SPENT SOLVENTS
RAW WASTEWATER

Pollutant	Stream Code	Sample Type	Source	Concentrations (mg/l) Day 1	Day 2	Day 3	Average
Toxic Pollutants							
66. bis(2-ethylhexyl) phthalate	B-2	1	0.01	*			*
85. tetrachloroethylene	B-2	1	ND	500,000.000			500,000.000
91. chlordane	B-2	1	ND	**			**
95. alpha-endosulfan	B-2	1	ND	**			**
96. beta-endosulfan	B-2	1	ND	**			**
102. alpha-BHC	B-2	1	ND	**			**
104. gamma-BHC	B-2	1	**	**			**
120. copper	B-2	1	ND	2			2
121. cyanide	B-2	1		0.004			0.004
122. lead	B-2	1	ND	0.02			0.02
123. mercury	B-2	1	ND	0.0005			0.0005
128. zinc	B-2	1	ND	0.06			0.06
Nonconventional							
aluminum	B-2	1		0.1			0.1
calcium	B-2	1		<5			<5
chemical oxygen demand (COD)	B-2	1		330			330
magnesium	B-2	1		<0.1			<0.1
phenols (total; by 4-AAP method)	B-2	1		0.072			0.072
total organic carbon (TOC)	B-2	1	35	143			143
Conventional							
oil and grease	B-2	1		2,180			2,180
suspended solids	B-2	1	138	23			23

Table V-30

ANNEALING ATMOSPHERE SCRUBBER LIQUOR

Plant	Water Use l/kkg	Water Use gal/ton	Percent Recycle	Wastewater l/kkg	Wastewater gal/ton
1	6,171	1,480	99.6	26.35	6.320

Table V-31

FREQUENCY OF OCCURRENCE OF TOXIC POLLUTANTS
ANNEALING ATMOSPHERE SCRUBBER LIQUOR
RAW WASTEWATER

	Pollutant	Analytical Quantification Level (mg/l)	Number of Streams Analyzed	Number of Samples Analyzed	Number of Times Observed in Samples (mg/l) ND-0.010	0.011-0.100	0.101-1.000	1.000+
1.	acenaphthene	0.010	1	1	1			
2.	acrolein	0.010	1	1	1			
3.	acrylonitrile	0.010	1	1	1			
4.	benzene	0.010	1	1	1			
5.	benzidine	0.010	1	1	1			
6.	carbon tetrachloride	0.010	1	1	1			
7.	chlorobenzene	0.010	1	1	1			
8.	1,2,4-trichlorobenzene	0.010	1	1	1			
9.	hexachlorobenzene	0.010	1	1	1			
10.	1,2-dichloroethane	0.010	1	1	1			
11.	1,1,1-trichloroethane	0.010	1	1	1			
12.	hexachloroethane	0.010	1	1	1			
13.	1,1-dichloroethane	0.010	1	1	1			
14.	1,1,2-trichloroethane	0.010	1	1	1			
15.	1,1,2,2-tetrachloroethane	0.010	1	1	1			
16.	chloroethane	0.010	1	1	1			
17.	bis(chloromethyl)ether	0.010	1	1	1			
18.	bis(chloroethyl)ether	0.010	1	1	1			
19.	2-chloroethyl vinyl ether	0.010	1	1	1			
20.	2-chloronaphthalene	0.010	1	1	1			
21.	2,4,6-trichlorophenol	0.010	1	1	1			
22.	p-chloro-m-cresol	0.010	1	1	1			
23.	chloroform	0.010	1	1	1			
24.	2-chlorophenol	0.010	1	1	1			
25.	1,2-dichlorobenzene	0.010	1	1	1			
26.	1,3-dichlorobenzene	0.010	1	1	1			
27.	1,4-dichlorobenzene	0.010	1	1	1			
28.	3,3'-dichlorobenzidine	0.010	1	1	1			
29.	1,1-dichloroethylene	0.010	1	1	1			
30.	1,2-trans-dichloroethylene	0.010	1	1	1			
31.	2,4-dichlorophenol	0.010	1	1	1			
32.	1,2-dichloropropane	0.010	1	1	1			
33.	1,3-dichloropropene	0.010	1	1	1			
34.	2,4-dimethylphenol	0.010	1	1	1			
35.	2,4-dinitrotoluene	0.010	1	1	1			
36.	2,6-dinitrotoluene	0.010	1	1	1			
37.	1,2-diphenylhydrazine	0.010	1	1	1			
38.	ethylbenzene	0.010	1	1	1			
39.	fluoranthene	0.010	1	1	1			

Table V-31 (Continued)

FREQUENCY OF OCCURRENCE OF TOXIC POLLUTANTS
ANNEALING ATMOSPHERE SCRUBBER LIQUOR
RAW WASTEWATER

	Pollutant	Analytical Quantification Level (mg/l)	Number of Streams Analyzed	Number of Samples Analyzed	Number of Times Observed in Samples (mg/l) ND-0.010	0.011-0.100	0.101-1.000	1.000+
40.	4-chlorophenyl phenyl ether	0.010	1	1	1			
41.	4-bromophenyl phenyl ether	0.010	1	1	1			
42.	bis(2-chloroisopropyl)ether	0.010	1	1	1			
43.	bis(2-chloroethoxy)methane	0.010	1	1	1			
44.	methylene chloride	0.010	1	1	1			
45.	methyl chloride (chloromethane)	0.010	1	1	1			
46.	methyl bromide (bromomethane)	0.010	1	1	1			
47.	bromoform (tribromomethane)	0.010	1	1	1			
48.	dichlorobromomethane	0.010	1	1	1			
49.	trichlorofluoromethane	0.010	1	1	1			
50.	dichlorodifluoromethane	0.010	1	1	1			
51.	chlorodibromomethane	0.010	1	1	1			
52.	hexachlorobutadiene	0.010	1	1	1			
53.	hexachlorocyclopentadiene	0.010	1	1	1			
54.	isophorone	0.010	1	1	1			
55.	naphthalene	0.010	1	1	1			
56.	nitrobenzene	0.010	1	1	1			
57.	2-nitrophenol	0.010	1	1	1			
58.	4-nitrophenol	0.010	1	1	1			
59.	2,4-dinitrophenol	0.010	1	1	1			
60.	4,6-dinitro-o-cresol	0.010	1	1	1			
61.	N-nitrosodimethylamine	0.010	1	1	1			
62.	N-nitrosodiphenylamine	0.010	1	1	1			
63.	N-nitrosodi-n-propylamine	0.010	1	1	1			
64.	pentachlorophenol	0.010	1	1	1			
65.	phenol	0.010	1	1	1			
66.	bis (2-ethylhexyl) phthalate	0.010	1	1	1			
67.	butyl benzyl phthalate	0.010	1	1	1			
68.	di-n-butyl phthalate	0.010	1	1	1			
69.	di-n-octyl phthalate	0.010	1	1	1			
70.	diethyl phthalate	0.010	1	1	1			
71.	dimethyl phthalate	0.010	1	1	1			
72.	benzo(a)anthracene	0.010	1	1	1			
73.	benzo(a)pyrene	0.010	1	1	1			
74.	benzo(b)fluoranthene	0.010	1	1	1			
75.	benzo(k)fluoranthene	0.010	1	1	1			
76.	chrysene	0.010	1	1	1			
77.	acenaphthylene	0.010	1	1	1			
78.	anthracene (a)	0.010	1	1	1			

Table V-31 (Continued)

FREQUENCY OF OCCURRENCE OF TOXIC POLLUTANTS
ANNEALING ATMOSPHERE SCRUBBER LIQUOR
RAW WASTEWATER

	Pollutant	Analytical Quantification Level (mg/l)	Number of Streams Analyzed	Number of Samples Analyzed	Number of Times Observed in Samples (mg/l)			
					ND-0.010	0.011-0.100	0.101-1.000	1.000+
79.	benzo(ghi)perylene	0.010	1	1	1			
80.	fluorene	0.010	1	1	1			
81.	phenanthrene (a)	0.010	-	-				
82.	dibenzo(a,h)anthracene	0.010	1	1	1			
83.	indeno (1,2,3-c,d)pyrene	0.010	1	1	1			
84.	pyrene	0.010	1	1	1			
85.	tetrachloroethylene	0.010	1	1	1			
86.	toluene	0.010	1	1	1			
87.	trichloroethylene	0.010	1	1	1			
88.	vinyl chloride (chloroethylene)	0.010	1	1	1			
89.	aldrin	0.005	1	1	1			
90.	dieldrin	0.005	1	1	1			
91.	chlordane	0.005	1	1	1			
92.	4,4'-DDT	0.005	1	1	1			
93.	4,4'-DDE	0.005	1	1	1			
94.	4,4'-DDD	0.005	1	1	1			
95.	alpha-endosulfan	0.005	1	1	1			
96.	beta-endosulfan	0.005	1	1	1			
97.	endosulfan sulfate	0.005	1	1	1			
98.	endrin	0.005	1	1	1			
99.	endrin aldehyde	0.005	1	1	1			
100.	heptachlor	0.005	1	1	1			
101.	heptachlor epoxide	0.005	1	1	1			
102.	alpha-BHC	0.005	1	1	1			
103.	beta-BHC	0.005	1	1	1			
104.	gamma-BHC	0.005	1	1	1			
105.	delta-BHC	0.005	1	1	1			
106.	PCB-1242 (b)	0.005	1	1	1			
107.	PCB-1254 (b)	0.005	-	-				
108.	PCB-1221 (b)	0.005	-	-				
109.	PCB-1232 (b)	0.005	-	-				
110.	PCB-1248 (c)	0.005	1	1	1			
111.	PCB-1260 (c)	0.005	-	-				
112.	PCB-1016 (c)	0.005	-	-				
113.	toxaphene	0.005	1	1	1			
114.	antimony	0.100	0	0				
115.	arsenic	0.010	1	1	1			
116.	asbestos	10 MFL	0	0				

Table V-31 (Continued)

FREQUENCY OF OCCURRENCE OF TOXIC POLLUTANTS
ANNEALING ATMOSPHERE SCRUBBER LIQUOR
RAW WASTEWATER

Pollutant	Analytical Quantification Level (mg/l)	Number of Streams Analyzed	Number of Samples Analyzed	Number of Times Observed in Samples (mg/l)			
				ND-0.010	0.011-0.100	0.101-1.000	1.000+
117. beryllium	0.010	1	1	1			
118. cadmium	0.002	1	1	1			
119. chromium (total)	0.005	1	1		1		
120. copper	0.009	1	1		1		
121. cyanide (total)	0.100	1	1	1			
122. lead	0.020	1	1		1		
123. mercury	0.0001	1	1	1			
124. nickel	0.005	1	1	1			
125. selenium	0.01	1	1	1			
126. silver	0.02	1	1	1			
127. thallium	0.100	1	1	1			
128. zinc	0.050	1	1			1	
129. 2,3,7,8-tetrachlorodibenzo-p-dioxin	0.005	0	0				

(a), (b), (c) Reported together.

Table V-32

SAMPLING DATA
ANNEALING ATMOSPHERE SCRUBBER LIQUOR
RAW WASTEWATER

Pollutant	Stream Code	Sample Type	Source	Concentrations (mg/l) Day 1	Day 2	Day 3	Average
Toxic Pollutants							
119. chromium	N-7	1	<0.001	0.016			0.016
120. copper	N-7	1	0.008	0.021			0.021
122. lead	N-7	1	0.010	0.016			0.016
123. mercury	N-7	1	0.0091	0.0087			0.0087
128. zinc	N-7	1	<0.010	0.220			0.220
Nonconventional							
alkalinity	N-7	1		110			110
aluminum	N-7	1	<0.5	<0.5			<0.5
calcium	N-7	1	28	76			76
chemical oxygen demand (COD)	N-7	1	5	18			18
dissolved solids	N-7	1		18			18
magnesium	N-7	1	4.39	11.41			11.41
phenols (total; by 4-AAP method)	N-7	1		0.008			0.008
total organic carbon (TOC)	N-7	1	2.7	7			7
Conventional							
suspended solids	N-7	1	<0.002	4			4
pH (standard units)	N-7	1	7.1	6.2			

Table V-33

ROLLING SOLUTION HEAT TREATMENT CONTACT COOLING WATER

Plant	Water Use l/kkg	Water Use gal/ton	Percent Recycle	Wastewater l/kkg	Wastewater gal/ton
1	*	*	100	0	0
2	41.59	9.974	100	0	0
3	67.54	16.20	0	20.01	4.800
4	*	*	*	1,478	354.4
5	2,110	506.0	0	2,110	506.0
6	2,585	620.0	0	2,585	620.0
7	*	*	0	*	*
8	*	*	0	*	*
9	52,950	12,700	*	*	*
10	145,100	34,800	*	*	*
Statistical Summary					
Minimum	41.59	9.974		0	0
Maximum	145,100	34,800		2,585	620.0
Mean	33,810	8,109		1,032	247.5
Median	2,347	563.0		748.8	179.6
Sample:	6 of 9 plants			6 of 9 plants	
Nonzero Mean	33,810	8,109		1,548	371.3
Sample:	6 of 9 plants			4 of 9 plants	

Note: This table includes data from one plant which discharges from two rolling heat treatment operations.

Table V-34

FREQUENCY OF OCCURRENCE OF TOXIC POLLUTANTS
ROLLING SOLUTION HEAT TREATMENT CONTACT COOLING WATER
RAW WASTEWATER

	Pollutant	Analytical Quantification Level (mg/l)	Number of Streams Analyzed	Number of Samples Analyzed	Number of Times Observed in Samples (mg/l)			
					ND-0.010	0.011-0.100	0.101-1.000	1.000+
1.	acenaphthene	0.010	3	5	5			
2.	acrolein	0.010	3	9	9			
3.	acrylonitrile	0.010	3	9	9			
4.	benzene	0.010	3	9	9			
5.	benzidine	0.010	3	5	5			
6.	carbon tetrachloride	0.010	3	9	9			
7.	chlorobenzene	0.010	3	9	9			
8.	1,2,4-trichlorobenzene	0.010	3	5	5			
9.	hexachlorobenzene	0.010	3	5	5			
10.	1,2-dichloroethane	0.010	3	9	9			
11.	1,1,1-trichloroethane	0.010	3	9	8	1		
12.	hexachloroethane	0.010	3	5	5			
13.	1,1-dichloroethane	0.010	3	9	9			
14.	1,1,2-trichloroethane	0.010	3	9	9			
15.	1,1,2,2-tetrachloroethane	0.010	3	9	9			
16.	chloroethane	0.010	3	9	9			
17.	bis(chloromethyl)ether	0.010	3	9	9			
18.	bis(chloroethyl)ether	0.010	3	5	5			
19.	2-chloroethyl vinyl ether	0.010	3	9	9			
20.	2-chloronaphthalene	0.010	3	5	5			
21.	2,4,6-trichlorophenol	0.010	3	5	5			
22.	p-chloro-m-cresol	0.010	3	5	5			
23.	chloroform	0.010	3	9	7	2		
24.	2-chlorophenol	0.010	3	5	5			
25.	1,2-dichlorobenzene	0.010	3	5	5			
26.	1,3-dichlorobenzene	0.010	3	5	5			
27.	1,4-dichlorobenzene	0.010	3	5	5			
28.	3,3'-dichlorobenzidine	0.010	3	5	5			
29.	1,1-dichloroethylene	0.010	3	9	9			
30.	1,2-trans-dichloroethylene	0.010	3	9	9			
31.	2,4-dichlorophenol	0.010	3	5	5			
32.	1,2-dichloropropane	0.010	3	9	9			
33.	1,3-dichloropropene	0.010	3	9	9			
34.	2,4-dimethylphenol	0.010	3	5	5			
35.	2,4-dinitrotoluene	0.010	3	5	5			
36.	2,6-dinitrotoluene	0.010	3	5	5			
37.	1,2-diphenylhydrazine	0.010	3	5	5			
38.	ethylbenzene	0.010	3	9	9			
39.	fluoranthene	0.010	3	5	5			

Table V-34 (Continued)

FREQUENCY OF OCCURRENCE OF TOXIC POLLUTANTS
ROLLING SOLUTION HEAT TREATMENT CONTACT COOLING WATER
RAW WASTEWATER

	Pollutant	Analytical Quantification Level (mg/l)	Number of Streams Analyzed	Number of Samples Analyzed	Number of Times Observed in Samples (mg/l) ND-0.010	0.011-0.100	0.101-1.000	1.000+
40.	4-chlorophenyl phenyl ether	0.010	3	5	5			
41.	4-bromophenyl phenyl ether	0.010	3	5	5			
42.	bis(2-chloroisopropyl)ether	0.010	3	5	5			
43.	bis(2-chloroethoxy)methane	0.010	3	5	5			
44.	methylene chloride	0.010	3	9	6	1	2	
45.	methyl chloride (chloromethane)	0.010	3	9	9			
46.	methyl bromide (bromomethane)	0.010	3	9	9			
47.	bromoform (tribromomethane)	0.010	3	9	9			
48.	dichlorobromomethane	0.010	3	9	9			
49.	trichlorofluoromethane	0.010	3	9	9			
50.	dichlorodifluoromethane	0.010	3	9	9			
51.	chlorodibromomethane	0.010	3	9	9			
52.	hexachlorobutadiene	0.010	3	5	5			
53.	hexachlorocyclopentadiene	0.010	3	5	5			
54.	isophorone	0.010	3	5	5			
55.	naphthalene	0.010	3	5	5			
56.	nitrobenzene	0.010	3	5	5			
57.	2-nitrophenol	0.010	3	5	5			
58.	4-nitrophenol	0.010	3	5	5			
59.	2,4-dinitrophenol	0.010	3	5	5			
60.	4,6-dinitro-o-cresol	0.010	3	5	5			
61.	N-nitrosodimethylamine	0.010	3	5	5			
62.	N-nitrosodiphenylamine	0.010	3	5	5			
63.	N-nitrosodi-n-propylamine	0.010	3	5	5			
64.	pentachlorophenol	0.010	3	5	5			
65.	phenol	0.010	3	5	5			
66.	bis (2-ethylhexyl) phthalate	0.010	3	5	5			
67.	butyl benzyl phthalate	0.010	3	5	5			
68.	di-n-butyl phthalate	0.010	3	5	4	1		
69.	di-n-octyl phthalate	0.010	3	5	5			
70.	diethyl phthalate	0.010	3	5	5			1
71.	dimethyl phthalate	0.010	3	5	5			
72.	benzo(a)anthracene	0.010	3	5	5			
73.	benzo(a)pyrene	0.010	3	5	5			
74.	benzo(b)fluoranthene	0.010	3	5	5			
75.	benzo(k)fluoranthene	0.010	3	5	5			
76.	chrysene	0.010	3	5	5			
77.	acenaphthylene	0.010	3	5	5			
78.	anthracene (a)	0.010	3	5	5			

Table V-34 (Continued)

FREQUENCY OF OCCURRENCE OF TOXIC POLLUTANTS
ROLLING SOLUTION HEAT TREATMENT CONTACT COOLING WATER
RAW WASTEWATER

	Pollutant	Analytical Quantification Level (mg/l)	Number of Streams Analyzed	Number of Samples Analyzed	Number of Times Observed in Samples (mg/l)			
					ND-0.010	0.011-0.100	0.101-1.000	1.000+
79.	benzo(ghi)perylene	0.010	3	5	5			
80.	fluorene	0.010	3	5	5			
81.	phenanthrene (a)	0.010	-	-				
82.	dibenzo(a,h)anthracene	0.010	3	5	5			
83.	indeno (1,2,3-c,d)pyrene	0.010	3	5	5			
84.	pyrene	0.010	3	5	5			
85.	tetrachloroethylene	0.010	3	9	8	1		
86.	toluene	0.010	3	9	9			
87.	trichloroethylene	0.010	3	9	9			
88.	vinyl chloride (chloroethylene)	0.010	3	9	9			
89.	aldrin	0.005	3	5	5			
90.	dieldrin	0.005	3	5	5			
91.	chlordane	0.005	3	5	5			
92.	4,4'-DDT	0.005	3	5	5			
93.	4,4'-DDE	0.005	3	5	5			
94.	4,4'-DDD	0.005	3	5	5			
95.	alpha-endosulfan	0.005	3	5	5			
96.	beta-endosulfan	0.005	3	5	5			
97.	endosulfan sulfate	0.005	3	5	5			
98.	endrin	0.005	3	5	5			
99.	endrin aldehyde	0.005	3	5	5			
100.	heptachlor	0.005	3	5	5			
101.	heptachlor epoxide	0.005	3	5	5			
102.	alpha-BHC	0.005	3	5	5			
103.	beta-BHC	0.005	3	5	5			
104.	gamma-BHC	0.005	3	5	5			
105.	delta-BHC	0.005	3	5	5			
106.	PCB-1242 (b)	0.005	3	5	5			
107.	PCB-1254 (b)	0.005	-	-				
108.	PCB-1221 (b)	0.005	-	-				
109.	PCB-1232 (b)	0.005	-	-				
110.	PCB-1248 (c)	0.005	3	5	5			
111.	PCB-1260 (c)	0.005	-	-				
112.	PCB-1016 (c)	0.005	-	-				
113.	toxaphene	0.005	3	5	5			
114.	antimony	0.100	3	5	5			
115.	arsenic	0.010	3	5	2	3		
116.	asbestos	10 MFL	0	0				

Table V-34 (Continued)

FREQUENCY OF OCCURRENCE OF TOXIC POLLUTANTS
ROLLING SOLUTION HEAT TREATMENT CONTACT COOLING WATER
RAW WASTEWATER

Pollutant	Analytical Quantification Level (mg/l)	Number of Streams Analyzed	Number of Samples Analyzed	Number of Times Observed in Samples (mg/l)			
				ND-0.010	0.011-0.100	0.101-1.000	1.000+
117. beryllium	0.010	3	5	5			
118. cadmium	0.002	3	5	5			
119. chromium (total)	0.005	3	5	4	1		
120. copper	0.009	3	5	2	2	1	
121. cyanide (total)	0.100	3	5	5			
122. lead	0.020	3	5	1	2	1	1
123. mercury	0.0001	3	5	5			
124. nickel	0.005	3	5	3	2		
125. selenium	0.01	3	5	5			
126. silver	0.02	3	5	4		1	
127. thallium	0.100	3	5	5			
128. zinc	0.050	3	5	4		1	
129. 2,3,7,8-tetrachlorodibenzo-p-dioxin	0.005	0	0				

(a), (b), (c) Reported together.

Table V-35

SAMPLING DATA
ROLLING SOLUTION HEAT TREATMENT CONTACT COOLING WATER
RAW WASTEWATER

Pollutant	Stream Code	Sample Type	Source	Concentrations (mg/l) Day 1	Day 2	Day 3	Average
Toxic Pollutants							
4. benzene	D-10	1	ND	ND	ND	ND	
	D-11	1	ND	ND	ND	0.001	0.001
	U-5	1	*	*	ND	ND	*
11. 1,1,1-trichloroethane	D-10	1	ND	ND	ND	ND	
	D-11	1	ND	0.039	*	0.002	0.014
	U-5	1	*	ND	ND	ND	
23. chloroform	D-10	1	0.020	*	*	0.005	0.002
	D-11	1	0.020	0.038	0.010	0.012	0.020
	U-5	1	*	ND	ND	ND	
44. methylene chloride	D-10	1	*	*	*	0.110	0.037
	D-11	1	*	*	0.010	0.095	0.035
	U-5	1	*	0.400	*	*	0.133
48. dichlorobromomethane	D-10	1	*	ND	ND	ND	
	D-11	1	*	ND	*	0.002	0.001
	U-5	1	*	ND	ND	ND	
66. bis(2-ethylhexyl) phthalate	D-10	6	*	ND			
	D-11	6	*	*			*
	U-5	3	*	*	*	*	*
68. di-n-butyl phthalate	D-10	6	*	0.015			0.015
	D-11	6	*	*			*
	U-5	3	*	*	ND	*	*
69. di-n-octyl phthalate	D-10	6	ND	ND			
	D-11	6	ND	ND			
	U-5	3	ND	ND	0.010	ND	0.010
70. diethyl phthalate	D-10	6	ND	*			*
	D-11	6	ND	0.010			0.010
	U-5	3	*	*	*	*	*
85. tetrachloroethylene	D-10	1	ND	ND	ND	ND	
	D-11	1	ND	0.011	ND	0.003	0.007
	U-5	1	ND	ND	ND	ND	
87. trichloroethylene	D-10	1	*	ND	ND	ND	
	D-11	1	*	*	ND	0.002	0.001
	U-5	1	ND	ND	ND	ND	

Table V-35 (Continued)

SAMPLING DATA
ROLLING SOLUTION HEAT TREATMENT CONTACT COOLING WATER
RAW WASTEWATER

Pollutant	Stream Code	Sample Type	Source	Concentrations (mg/l) Day 1	Day 2	Day 3	Average
115. arsenic	D-10	6	<0.010	<0.010			<0.010
	D-11	6	<0.010	<0.010			<0.010
	U-5	3	<0.002	0.028	0.032	0.032	0.031
118. cadmium	D-10	6	<0.002	<0.001			<0.001
	D-11	6	<0.002	<0.001			<0.001
	U-5	3	0.002	0.002	0.002	0.002	0.002
119. chromium	D-10	6	<0.005	0.007			0.007
	D-11	6	<0.005	0.006			0.006
	U-5	3	<0.001	0.059	0.008	0.009	0.025
120. copper	D-10	6	<0.009	0.010			0.010
	D-11	6	<0.009	<0.009			<0.009
	U-5	3	0.013	0.160	0.026	0.026	0.071
121. cyanide	D-10	1		0.002			0.002
	D-11	1		<0.001			<0.001
	U-5	1		<0.02	<0.02	<0.02	<0.02
122. lead	D-10	6	<0.020	<0.020			<0.020
	D-11	6	<0.020	0.030			0.030
	U-5	3	0.010	0.380	1.740	0.018	0.713
123. mercury	D-10	6	0.0006	0.0005			0.0005
	D-11	6	0.0006	0.0004			0.0004
	U-5	3	0.005	0.002	0.003	0.003	0.003
124. nickel	D-10	6	<0.005	<0.005			<0.005
	D-11	6	<0.005	0.020			0.020
	U-5	3	0.016	0.006	0.016	0.007	0.010
126. silver	D-10	6	<0.020	<0.020			<0.020
	D-11	6	<0.020	<0.020			<0.020
	U-5	3	ND	0.118	ND	ND	0.118
128. zinc	D-10	6	<0.050	<0.050			<0.050
	D-11	6	<0.050	<0.050			<0.050
	U-5	3	<0.010	0.190	<0.010	<0.010	<0.070
Nonconventional							
alkalinity	D-10	6	ND	130			130
	D-11	6	ND	120			120
	U-5	3	ND		220	220	220

Table V-35 (Continued)

SAMPLING DATA
ROLLING SOLUTION HEAT TREATMENT CONTACT COOLING WATER
RAW WASTEWATER

Pollutant	Stream Code	Sample Type	Source	Concentrations (mg/l) Day 1	Day 2	Day 3	Average
aluminum	D-10	6	0.2	0.4			0.4
	D-11	6	0.2	<0.2			<0.2
	U-5	3	<0.1	<0.1	<0.1	<0.1	<0.1
calcium	D-10	6	38	51			51
	D-11	6	38	41			41
	U-5	3	58.7	93.4	90.3	85.4	89.7
chemical oxygen demand (COD)	D-10	6	ND	<5			<5
	D-11	6	ND	7			7
	U-5	3	ND	<5	11	11	<9
dissolved solids	D-10	6	ND	412			412
	D-11	6	ND	334			334
	U-5	3	ND	610	580	550	580
magnesium	D-10	6	12	20			20
	D-11	6	12	11			11
	U-5	3	7.44	18.9	20.8	21.1	20.3
phenols (total; by 4-AAP method)	D-10	6	ND	0.011			0.011
	D-11	6	ND	0.01			0.01
	U-5	1	ND	0.009	0.006	0.009	0.008
sulfate	D-10	6	ND	70			70
	D-11	6	ND	<10			<10
	U-5	3	ND		110	110	110
total organic carbon (TOC)	D-10	6	ND	2			2
	D-11	6	ND	<1			<1
	U-5	3	ND	3.8	3.5	3.4	3.6
Conventional							
oil and grease	D-10	1	ND	13			13
	D-11	1	ND	12			12
	U-5	1	ND	<5	<5	6	<5
suspended solids	D-10	6	ND	2			2
	D-11	6	ND	3			3
	U-5	3	ND	37	2	4.6	15
pH (standard units)	D-10	1		7.1	6.8	7.4	
	D-11	1		8.1	8.2	7.5	
	U-5	1			7		

Table V-36

EXTRUSION PRESS HEAT TREATMENT CONTACT COOLING WATER

Plant	Water Use l/kkg	Water Use gal/ton	Percent Recycle	Wastewater l/kkg	Wastewater gal/ton
1	*	*	100	0	0
2	*	*	100	0	0
3	1,924	461.5	100	0	0
4	76.30	18.30	0	65.46	15.70
5	80.05	19.20	0	68.80	16.50
6	833.9	200.0	0	81.35	19.51
7	113.0	27.10	0	96.73	23.20
8	116.7	28.00	0	100.1	24.00
9	433.6	104.0	0	433.6	104.0
10	554.5	133.0	0	554.5	133.0
11	*	*	*	1,057	253.4
12	*	*	0	1,447	347.0
13	1,768	424.0	0	1,768	424.0
14	26,600	6,380	92	2,218	532.0
15†	2,522	605.0	0	2,522	605.0
16	2,668	640.0	0	2,668	640.0
17	2,831	679.0	0	2,831	679.0
18	3,185	764.0	0	3,185	764.0
19	*	*	0	3,536	848.0
20	5,670	1,360	*	5,670	1,360
21	10,760	2,580	0	10,760	2,580
22	16,700	4,076	0	16,700	4,076
23	21,890	5,250	0	21,890	5,250
24	25,850	6,200	0	25,850	6,200
25	28,690	6,880	0	28,690	6,880
26	*	*	*	*	*
27	*	*	0	*	*
28	*	*	*	*	*
29	*	*	*	*	*
30	*	*	0	*	*

*Data not available.
†Combination of two presses.

Statistical Summary

Minimum	76.30	18.30	0	0
Maximum	28,690	6,880	28,690	6,880
Mean	7,676	1,841	5,299	1,271
Median	2,596	622.5	1,768	424.0
Sample:	20 of 29 plants		25 of 29 plants	
Nonzero Mean	7,676	1,841	6,021	1,444
Sample:	20 of 29 plants		22 of 29 plants	

Note: This table includes data from one plant which discharges from two extrusion press heat treatment operations.

Table V-37

FREQUENCY OF OCCURRENCE OF TOXIC POLLUTANTS
EXTRUSION PRESS HEAT TREATMENT CONTACT COOLING WATER
RAW WASTEWATER

	Pollutant	Analytical Quantification Level (mg/l)	Number of Streams Analyzed	Number of Samples Analyzed	Number of Times Observed in Samples (mg/l)			
					ND-0.010	0.011-0.100	0.101-1.000	1.000+
1.	acenaphthene	0.010	6	8	8			
2.	acrolein	0.010	6	9	9			
3.	acrylonitrile	0.010	6	9	9			
4.	benzene	0.010	6	9	8	1		
5.	benzidine	0.010	6	8	8			
6.	carbon tetrachloride	0.010	6	9	9			
7.	chlorobenzene	0.010	6	9	9			
8.	1,2,4-trichlorobenzene	0.010	6	8	8			
9.	hexachlorobenzene	0.010	6	8	8			
10.	1,2-dichloroethane	0.010	6	9	9			
11.	1,1,1-trichloroethane	0.010	6	9	9			
12.	hexachloroethane	0.010	6	8	8			
13.	1,1-dichloroethane	0.010	6	9	9			
14.	1,1,2-trichloroethane	0.010	6	9	9			
15.	1,1,2,2-tetrachloroethane	0.010	6	9	9			
16.	chloroethane	0.010	6	9	9			
17.	bis(chloromethyl)ether	0.010	6	9	9			
18.	bis(chloroethyl)ether	0.010	6	8	8			
19.	2-chloroethyl vinyl ether	0.010	6	9	9			
20.	2-chloronaphthalene	0.010	6	8	8			
21.	2,4,6-trichlorophenol	0.010	6	8	8			
22.	p-chloro-m-cresol	0.010	6	8	8			
23.	chloroform	0.010	6	9	5	4		
24.	2-chlorophenol	0.010	6	8	7	1		
25.	1,2-dichlorobenzene	0.010	6	8	8			
26.	1,3-dichlorobenzene	0.010	6	8	8			
27.	1,4-dichlorobenzene	0.010	6	8	8			
28.	3,3'-dichlorobenzidine	0.010	6	8	8			
29.	1,1-dichloroethylene	0.010	6	9	9			
30.	1,2-trans-dichloroethylene	0.010	6	9	8	1		
31.	2,4-dichlorophenol	0.010	6	8	8			
32.	1,2-dichloropropane	0.010	6	9	9			
33.	1,3-dichloropropene	0.010	6	9	9			
34.	2,4-dimethylphenol	0.010	6	8	8			
35.	2,4-dinitrotoluene	0.010	6	8	8			
36.	2,6-dinitrotoluene	0.010	6	8	8			
37.	1,2-diphenylhydrazine	0.010	6	8	8			
38.	ethylbenzene	0.010	6	9	9			
39.	fluoranthene	0.010	6	8	8			

Table V-37 (Continued)

FREQUENCY OF OCCURRENCE OF TOXIC POLLUTANTS
EXTRUSION PRESS HEAT TREATMENT CONTACT COOLING WATER
RAW WASTEWATER

	Pollutant	Analytical Quantification Level (mg/l)	Number of Streams Analyzed	Number of Samples Analyzed	Number of Times Observed in Samples (mg/l) ND-0.010	0.011-0.100	0.101-1.000	1.000+
40.	4-chlorophenyl phenyl ether	0.010	6	8	8			
41.	4-bromophenyl phenyl ether	0.010	6	8	8			
42.	bis(2-chloroisopropyl)ether	0.010	6	8	8			
43.	bis(2-chloroethoxy)methane	0.010	6	8	8			
44.	methylene chloride	0.010	6	9	3	3	3	
45.	methyl chloride (chloromethane)	0.010	6	9	9			
46.	methyl bromide (bromomethane)	0.010	6	9	9			
47.	bromoform (tribromomethane)	0.010	6	9	9			
48.	dichlorobromomethane	0.010	6	9	9			
49.	trichlorofluoromethane	0.010	6	9	9			
50.	dichlorodifluoromethane	0.010	6	9	9			
51.	chlorodibromomethane	0.010	6	9	9			
52.	hexachlorobutadiene	0.010	6	8	8			
53.	hexachlorocyclopentadiene	0.010	6	8	8			
54.	isophorone	0.010	6	8	8			
55.	naphthalene	0.010	6	8	8			
56.	nitrobenzene	0.010	6	8	8			
57.	2-nitrophenol	0.010	6	8	8			
58.	4-nitrophenol	0.010	6	8	7	1		
59.	2,4-dinitrophenol	0.010	6	8	8			
60.	4,6-dinitro-o-cresol	0.010	6	8	8			
61.	N-nitrosodimethylamine	0.010	6	8	8			
62.	N-nitrosodiphenylamine	0.010	6	8	8			
63.	N-nitrosodi-n-propylamine	0.010	6	8	8			
64.	pentachlorophenol	0.010	6	8	8			
65.	phenol	0.010	6	8	7			1
66.	bis (2-ethylhexyl) phthalate	0.010	6	8	4	3	1	
67.	butyl benzyl phthalate	0.010	6	8	5	2	1	
68.	di-n-butyl phthalate	0.010	6	8	5	3		
69.	di-n-octyl phthalate	0.010	6	8	7	1		
70.	diethyl phthalate	0.010	6	8	8			
71.	dimethyl phthalate	0.010	6	8	8			
72.	benzo(a)anthracene	0.010	6	8	8			
73.	benzo(a)pyrene	0.010	6	8	8			
74.	benzo(b)fluoranthene	0.010	6	8	8			
75.	benzo(k)fluoranthene	0.010	6	8	8			
76.	chrysene	0.010	6	8	8			
77.	acenaphthylene	0.010	6	8	8			
78.	anthracene (a)	0.010	6	8	8			

Table V-37 (Continued)

FREQUENCY OF OCCURRENCE OF TOXIC POLLUTANTS
EXTRUSION PRESS HEAT TREATMENT CONTACT COOLING WATER
RAW WASTEWATER

	Pollutant	Analytical Quantification Level (mg/l)	Number of Streams Analyzed	Number of Samples Analyzed	Number of Times Observed in Samples (mg/l) ND-0.010	0.011-0.100	0.101-1.000	1.000+
79.	benzo(ghi)perylene	0.010	6	8	8			
80.	fluorene	0.010	6	8	8			
81.	phenanthrene (a)	0.010	-	-				
82.	dibenzo(a,h)anthracene	0.010	6	8	8			
83.	indeno (1,2,3-c,d)pyrene	0.010	6	8	8			
84.	pyrene	0.010	6	8	8			
85.	tetrachloroethylene	0.010	6	9	9			
86.	toluene	0.010	6	9	9			
87.	trichloroethylene	0.010	6	9	9			
88.	vinyl chloride (chloroethylene)	0.010	6	9	9			
89.	aldrin	0.005	6	8	8			
90.	dieldrin	0.005	6	8	8			
91.	chlordane	0.005	6	8	7	1		
92.	4,4'-DDT	0.005	6	8	8			
93.	4,4'-DDE	0.005	6	8	8			
94.	4,4'-DDD	0.005	6	8	8			
95.	alpha-endosulfan	0.005	6	8	7		1	
96.	beta-endosulfan	0.005	6	8	7		1	
97.	endosulfan sulfate	0.005	6	8	7		1	
98.	endrin	0.005	6	8	7		1	
99.	endrin aldehyde	0.005	6	8	7	1		
100.	heptachlor	0.005	6	8	7		1	
101.	heptachlor epoxide	0.005	6	8	6	2		
102.	alpha-BHC	0.005	6	8	8			
103.	beta-BHC	0.005	6	8	8			
104.	gamma-BHC	0.005	6	8	8			
105.	delta-BHC	0.005	6	8	8			
106.	PCB-1242 (b)	0.005	6	8	8			
107.	PCB-1254 (b)	0.005	-	-				
108.	PCB-1221 (b)	0.005	-	-				
109.	PCB-1232 (b)	0.005	-	-				
110.	PCB-1248 (c)	0.005	6	8	8			
111.	PCB-1260 (c)	0.005	-	-				
112.	PCB-1016 (c)	0.005	-	-				
113.	toxaphene	0.005	6	8	8			
114.	antimony	0.100	6	8	8			
115.	arsenic	0.010	6	8	8			
116.	asbestos	10 MFL	0	0				

Table V-37 (Continued)

FREQUENCY OF OCCURRENCE OF TOXIC POLLUTANTS
EXTRUSION PRESS HEAT TREATMENT CONTACT COOLING WATER
RAW WASTEWATER

Pollutant	Analytical Quantification Level (mg/l)	Number of Streams Analyzed	Number of Samples Analyzed	Number of Times Observed in Samples (mg/l)			
				ND-0.010	0.011-0.100	0.101-1.000	1.000+
117. beryllium	0.010	5	7	7			
118. cadmium	0.002	5	7	7			
119. chromium (total)	0.005	5	7	7			
120. copper	0.009	5	7	1	6		
121. cyanide (total)	0.100	6	8	5	3		
122. lead	0.020	5	7	3	4		
123. mercury	0.0001	5	7	4	3		
124. nickel	0.005	5	7	5	2		
125. selenium	0.01	6	8	8			
126. silver	0.02	6	8	7	1		
127. thallium	0.100	6	8	8			
128. zinc	0.050	5	7	4	3		
129. 2,3,7,8-tetrachlorodibenzo-p-dioxin	0.005	0	0				

(a), (b), (c) Reported together.

Table V-38

SAMPLING DATA
EXTRUSION PRESS HEAT TREATMENT CONTACT COOLING WATER
RAW WASTEWATER

Pollutant	Stream Code	Sample Type	Source	Concentrations (mg/l) Day 1	Day 2	Day 3	Average
Toxic Pollutants							
4. benzene	F-6	1	ND	*	ND		*
	G-3	1	*	ND	*	*	*
	G-4	1	*	*			*
	G-5	1	*	*			*
	G-6	1	*	0.014			0.014
	V-5	1	0.004	ND			
23. chloroform	F-6	1	0.012	0.018	0.021		0.020
	G-3	1	0.015	*	0.011	*	0.004
	G-4	1	0.015	*			*
	G-5	1	0.015	*			*
	G-6	1	0.015	0.023			0.023
	V-5	1	ND	ND			
24. 2-chlorophenol	F-6	2	ND	0.020			0.020
	G-3	2	ND	ND	ND	ND	
	G-4	2	ND	ND			
	G-5	6	ND	ND			
	G-6	2	ND	ND			
	V-5	2	ND	ND			
30. 1,2-trans-dichloroethylene	F-6	1	ND	ND	ND		
	G-3	1	ND	*	ND	ND	*
	G-4	1	ND	*			*
	G-5	1	ND	0.013			0.013
	G-6	1	ND	ND			
	V-5	1	ND	ND			
44. methylene chloride	F-6	1	ND	0.011	0.110		0.061
	G-3	1	0.563	<0.290	<0.550	<0.175	<0.338
	G-4	1	0.563	0.110			0.110
	G-5	1	0.563	0.049			0.049
	G-6	1	0.563	0.800			0.800
	V-5	1	0.015	0.028			0.028
58. 4-nitrophenol	F-6	2	ND	ND			
	G-3	2	ND	*	ND	0.017	0.009
	G-4	2	ND	ND			
	G-5	6	ND	ND			
	G-6	2	ND	ND			
	V-5	2	ND	ND			
65. phenol	F-6	2	ND	ND			
	G-3	2	*	ND	ND	2.700	2.700
	G-4	2	*	ND			
	G-5	6	*	ND			
	G-6	2	*	ND			
	V-5	2	ND	0.006			0.006

Table V-38 (Continued)

SAMPLING DATA
EXTRUSION PRESS HEAT TREATMENT CONTACT COOLING WATER
RAW WASTEWATER

Pollutant	Stream Code	Sample Type	Source	Concentrations (mg/l) Day 1	Day 2	Day 3	Average
66. bis(2-ethylhexyl) phthalate	F-6	2	0.025	ND			
	G-3	2	*	0.190	0.035	0.085	0.103
	G-4	2	*	*			*
	G-5	6	*	0.032			0.032
	G-6	2	*	*			*
	V-5	2	0.008	ND			
67. butyl benzyl phthalate	F-6	2	ND	ND			
	G-3	2	ND	0.130	0.026	0.046	0.067
	G-4	2	ND	*			*
	G-5	6	ND	*			*
	G-6	2	ND	*			*
	V-5	2	ND	ND			
68. di-n-butyl phthalate	F-6	2	*	ND			
	G-3	2	*	0.022	0.013	0.015	0.017
	G-4	2	*	*			*
	G-5	6	*	*			*
	G-6	2	*	*			*
	V-5	2	ND	ND			
69. di-n-octyl phthalate	F-6	2	ND	ND			
	G-3	2	ND	ND	0.011	ND	0.011
	G-4	2	ND	ND			
	G-5	6	ND	*			*
	G-6	2	ND	*			*
	V-5	2	ND	ND			
91. chlordane	F-6	2		**			**
	G-3	2		ND	ND	ND	
	G-4	2		ND			
	G-5	6		0.0140			0.0140
	G-6	2		0.010			0.010
	V-5	2	ND	ND			
95. alpha-endosulfan	F-6	2	ND	ND			
	G-3	2	ND	ND	ND	ND	
	G-4	2	ND	ND			
	G-5	6	ND	0.500			0.500
	G-6	2	ND	**			**
	V-5	2	ND	ND			
96. beta-endosulfan	F-6	2	ND	**			**
	G-3	2	ND	ND	ND	ND	
	G-4	2	ND	ND			
	G-5	6	ND	**			**
	G-6	2	ND	0.200			0.200
	V-5	2	ND	ND			

Table V-38 (Continued)

SAMPLING DATA
EXTRUSION PRESS HEAT TREATMENT CONTACT COOLING WATER
RAW WASTEWATER

Pollutant	Stream Code	Sample Type	Source	Concentrations (mg/l) Day 1	Day 2	Day 3	Average
97. endosulfan sulfate	F-6	2	ND	ND			
	G-3	2	**	ND	ND	ND	
	G-4	2	**	**			**
	G-5	6	**	0.200			0.200
	G-6	2	**	ND			
	V-5	2	ND	ND			
98. endrin	F-6	2	ND	ND			
	G-3	2	ND	ND	ND	ND	
	G-4	2	ND	ND			
	G-5	6	ND	ND			
	G-6	2	ND	0.200			0.200
	V-5	2	ND	ND			
99. endrin aldehyde	F-6	2	ND	0.011			0.011
	G-3	2	ND	ND	ND	ND	
	G-4	2	ND	ND			
	G-5	6	ND	ND			
	G-6	2	ND	ND			
	V-5	2	ND	ND			
100. heptachlor	F-6	2	**	**			**
	G-3	2	ND	ND	ND	ND	
	G-4	2	ND	0.200			0.200
	G-5	6	ND	ND			
	G-6	2	ND	ND			
	V-5	2	ND	ND			
101. heptachlor epoxide	F-6	2	*	0.100			0.100
	G-3	2	**	ND	ND	ND	
	G-4	2	**	0.100			0.100
	G-5	6	**	ND			
	G-6	2	**	**			**
	V-5	2	ND	ND			
102. alpha-BHC	F-6	2	ND	ND			
	G-3	2	ND	ND	ND	ND	
	G-4	2	ND	ND			
	G-5	6	ND	**			**
	G-6	2	ND	**			**
	V-5	2	ND	ND			
115. arsenic	F-6	2	<0.01	<0.01			<0.01
	G-3	2	<0.01	<0.01	<0.01	<0.01	<0.01
	G-4	2	<0.01	<0.01			<0.01
	G-5	6	<0.01	<0.01			<0.01
	G-6	2	<0.01	<0.01			<0.01
	V-5	2	<0.005	0.010			0.010

Table V-38 (Continued)

SAMPLING DATA
EXTRUSION PRESS HEAT TREATMENT CONTACT COOLING WATER
RAW WASTEWATER

Pollutant	Stream Code	Sample Type	Source	Concentrations (mg/l) Day 1	Day 2	Day 3	Average
118. cadmium	G-3	2	<0.002	<0.002	<0.002	<0.002	<0.002
	G-4	2	<0.002	<0.002			<0.002
	G-5	6	<0.002	<0.002			<0.002
	G-6	2	<0.002	<0.002			<0.002
	V-5	2	<0.001	0.003			0.003
119. chromium	G-3	2	<0.005	0.010	<0.005	<0.005	<0.007
	G-4	2	<0.005	<0.005			<0.005
	G-5	6	<0.005	<0.005			<0.002
	G-6	2	<0.005	<0.005			<0.005
	V-5	2	<0.001	0.002			0.002
120. copper	G-3	2	<0.009	0.040	0.030	0.030	0.033
	G-4	2	<0.009	<0.009			<0.009
	G-5	6	<0.009	0.100			0.100
	G-6	2	<0.009	0.040			0.040
	V-5	2	0.027	0.024			0.024
121. cyanide	F-6	2	ND	<0.001			<0.001
	G-3	2	ND	0.012	0.006	0.014	0.011
	G-4	2	ND	0.001			0.001
	G-5	6	ND	0.029			0.029
	G-6	2	ND	0.004			0.004
	V-5	1	0.0042	0.0042			0.0042
122. lead	G-3	2	<0.020	0.040	0.040	<0.020	<0.033
	G-4	2	<0.020	0.020			0.020
	G-5	6	<0.020	<0.020			<0.020
	G-6	2	<0.020	<0.020			<0.020
	V-5	2	0.079	0.021			0.021
123. mercury	G-3	2	0.0005	0.030	0.030	0.030	0.030
	G-4	2	0.0005	0.0005			0.0005
	G-5	6	0.0005	0.0004			0.0004
	G-6	2	0.0005	0.0002			0.0002
	V-5	2	<0.0002	<0.0002			<0.0002
124. nickel	G-3	2	<0.005	0.040	<0.005	<0.005	<0.017
	G-4	2	<0.005	<0.005			<0.005
	G-5	6	<0.005	<0.005			<0.005
	G-6	2	<0.005	<0.005			<0.005
	V-5	2	0.009	0.017			0.017
126. silver	F-6	2	<0.020	<0.02			<0.02
	G-3	2	<0.020	<0.020	<0.020	<0.020	<0.020
	G-4	2	<0.020	<0.020			<0.020
	G-5	6	<0.020	<0.020			<0.020
	G-6	2	<0.020	<0.020			<0.020
	V-5	2	0.05	0.07			0.07

Table V-38 (Continued)

SAMPLING DATA
EXTRUSION PRESS HEAT TREATMENT CONTACT COOLING WATER
RAW WASTEWATER

Pollutant	Stream Code	Sample Type	Source	Concentrations (mg/l) Day 1	Day 2	Day 3	Average
127. thallium	F-6	2	<0.100	<0.100			<0.100
	G-3	2	<0.100	<0.100	<0.100	<0.100	<0.100
	G-4	2	<0.100	<0.100			<0.100
	G-5	6	<0.100	<0.100			<0.100
	G-6	2	<0.100	<0.100			<0.100
	V-5	2	<0.001	0.010			0.010
128. zinc	G-3	2	<0.050	0.050	<0.050	<0.050	<0.050
	G-4	2	<0.050	<0.050			<0.050
	G-5	6	<0.050	<0.050			<0.050
	G-6	2	<0.050	0.050			0.050
	V-5	2	0.50	0.05			0.05
Nonconventional							
alkalinity	F-6	2		140	140		140
	G-3	2		410	125	180	238
	G-4	2		280			280
	G-5	6		450			450
	V-5	2		320			320
aluminum	F-6	2	<0.090	<0.100	1.700		<0.900
	G-3	2	<0.090	0.300	0.300	0.800	0.467
	G-4	2	<0.090	<0.100			<0.100
	G-5	6	<0.090	0.200			0.200
	G-6	2	<0.090	0.200			0.200
	V-5	2	0.09	2.1			2.1
calcium	F-6	2	<5.000	0.680	0.220		0.450
	G-3	2	<5.000	<3.500	<2.800	<3.900	<3.400
	G-4	2	<5.000	3.1			3.1
	G-5	6	<5.000	ND			
	G-6	2	<5.000	<5.000			<5.000
	V-5	2	9.8	3.4			3.4
chemical oxygen demand (COD)	F-6	2		<5			<5
	G-3	2		218	127	295	213
	G-4	2		<5			<5
	G-5	6		76			76
	G-6	2		74			74
	V-5	2	<1	4			4

Table V-38 (Continued)

SAMPLING DATA
EXTRUSION PRESS HEAT TREATMENT CONTACT COOLING WATER
RAW WASTEWATER

Pollutant	Stream Code	Sample Type	Source	Concentrations (mg/l) Day 1	Day 2	Day 3	Average
magnesium	F-6	2	<0.100	0.110	0.080		0.095
	G-3	2	0.300	0.200	0.200	0.300	0.233
	G-4	2	0.300	0.300			0.300
	G-5	6	0.300	0.500			0.500
	G-6	2	0.300	<0.100			<0.100
	V-5	2	63	0.79			0.79
phenols (total; by 4-AAP method)	F-6	2		<0.001			<0.001
	G-3	2		0.017	0.015	0.010	0.014
	G-4	2		0.011			0.011
	G-5	6		0.015			0.015
	V-5	1	.062	0.015			0.015
sulfate	F-6	2		10	20		15
	G-3	2		10	5	<25	<13
	G-4	2		74			74
	G-5	6		95			95
	V-5	2		42			42
total organic carbon (TOC)	F-6	2		<1			<1
	G-3	2		106	35	122	88
	G-4	2		5			5
	G-5	6		46			46
	G-6	2		27			27
	V-5	2	4.7	79			79
Conventional							
oil and grease	F-6	1		9			9
	G-3	1		59	36	280	125
	G-4	1		8			8
	G-5	1		20			20
	G-6	1		17			17
	V-5	1	16	7.4			7.4
suspended solids	F-6	2		<1			<1
	G-3	2		41	61	74	59
	G-4	2		2			2
	G-5	6		28			28
	G-6	2		3			3
	V-5	2		20			20
pH (standard units)	F-6	1	7.55	7.1	7.7		
	G-3	2		8.2	7.1	7.3	
	G-4	1		7.8			
	G-5	1		8.6			
	G-6	1		9.2			

Table V-39

EXTRUSION SOLUTION HEAT TREATMENT CONTACT COOLING WATER

Plant	Water Use l/kkg	Water Use gal/ton	Percent Recycle	Wastewater l/kkg	Wastewater gal/ton
1	*	*	100	0	0
2	161,800	38,800	100	0	0
3	9,631	2,310	91	0	0
4	*	*	100	0	0
5	1,268	304.0	0	181.0	43.40
6	41,420	9,933	99	879.7	211.0
7	39,690	9,520	80	1,993	478.0
8	2,635	632.0	0	2,635	632.0
9	41,690	10,000	87	3,056	733.0
10	3,394	814.0	0	3,381	811.0
11	5,003	1,200	0	5,003	1,200
12	8,547	2,050	0	6,421	1,540
13	7,130	1,710	0	7,130	1,710
14	10,730	2,573	0	10,730	2,573
15	15,680	3,760	0	15,680	3,760
16	*	*	*	30,020	7,200
17	*	*	*	44,150	10,590
18	*	*	0	*	*
19	*	*	0	*	*
20	*	*	0	*	*
21	*	*	0	*	*
22	*	*	*	*	*
23	*	*	*	*	*
24	*	*	0	*	*
25	*	*	*	*	*
26	*	*	0	*	*
27	4,962	1,190	*	*	*

*Data not available.

Statistical Summary

Minimum	1,268	304.0	0	0
Maximum	161,800	38,800	44,150	10,590
Mean	25,250	6,057	7,901	1,895
Median	9,089	2,180	3,056	733.0
Sample:	14 of 27 plants		17 of 27 plants	
Nonzero Mean	25,250	6,057	10,330	2,478
Sample:	14 of 27 plants		13 of 27 plants	

Table V-40

FREQUENCY OF OCCURRENCE OF TOXIC POLLUTANTS
EXTRUSION SOLUTION HEAT TREATMENT CONTACT COOLING WATER
RAW WASTEWATER

	Pollutant	Analytical Quantification Level (mg/l)	Number of Streams Analyzed	Number of Samples Analyzed	Number of Times Observed in Samples (mg/l) ND-0.010	0.011-0.100	0.101-1.000	1.000+
1.	acenaphthene	0.010	3	3	3			
2.	acrolein	0.010	3	5	5			
3.	acrylonitrile	0.010	3	5	5			
4.	benzene	0.010	3	5	5			
5.	benzidine	0.010	3	3	3			
6.	carbon tetrachloride	0.010	3	5	5			
7.	chlorobenzene	0.010	3	5	5			
8.	1,2,4-trichlorobenzene	0.010	3	3	3			
9.	hexachlorobenzene	0.010	3	3	3			
10.	1,2-dichloroethane	0.010	3	5	5			
11.	1,1,1-trichloroethane	0.010	3	5	5			
12.	hexachloroethane	0.010	3	3	3			
13.	1,1-dichloroethane	0.010	3	5	5			
14.	1,1,2-trichloroethane	0.010	3	5	5			
15.	1,1,2,2-tetrachloroethane	0.010	3	5	5			
16.	chloroethane	0.010	3	5	5			
17.	bis(chloromethyl)ether	0.010	3	5	5			
18.	bis(chloroethyl)ether	0.010	3	3	3			
19.	2-chloroethyl vinyl ether	0.010	3	5	5			
20.	2-chloronaphthalene	0.010	3	3	3			
21.	2,4,6-trichlorophenol	0.010	3	3	3			
22.	p-chloro-m-cresol	0.010	3	3	3			
23.	chloroform	0.010	3	5	5			
24.	2-chlorophenol	0.010	3	3	3			
25.	1,2-dichlorobenzene	0.010	3	3	3			
26.	1,3-dichlorobenzene	0.010	3	3	3			
27.	1,4-dichlorobenzene	0.010	3	3	3			
28.	3,3'-dichlorobenzidine	0.010	3	3	3			
29.	1,1-dichloroethylene	0.010	3	5	5			
30.	1,2-trans-dichloroethylene	0.010	3	5	5			
31.	2,4-dichlorophenol	0.010	3	3	3			
32.	1,2-dichloropropane	0.010	3	5	5			
33.	1,3-dichloropropene	0.010	3	5	5			
34.	2,4-dimethylphenol	0.010	3	3	3			
35.	2,4-dinitrotoluene	0.010	3	3	3			
36.	2,6-dinitrotoluene	0.010	3	3	3			
37.	1,2-diphenylhydrazine	0.010	3	3	3			
38.	ethylbenzene	0.010	3	5	5			
39.	fluoranthene	0.010	3	3	3			

Table V-40 (Continued)

FREQUENCY OF OCCURRENCE OF TOXIC POLLUTANTS
EXTRUSION SOLUTION HEAT TREATMENT CONTACT COOLING WATER
RAW WASTEWATER

	Pollutant	Analytical Quantification Level (mg/l)	Number of Streams Analyzed	Number of Samples Analyzed	Number of Times Observed in Samples (mg/l)			
					ND-0.010	0.011-0.100	0.101-1.000	1.000+
40.	4-chlorophenyl phenyl ether	0.010	3	3	3			
41.	4-bromophenyl phenyl ether	0.010	3	3	3			
42.	bis(2-chloroisopropyl)ether	0.010	3	3	3			
43.	bis(2-chloroethoxy)methane	0.010	3	3	3			
44.	methylene chloride	0.010	3	5	3	1	1	
45.	methyl chloride (chloromethane)	0.010	3	5	5			
46.	methyl bromide (bromomethane)	0.010	3	5	5			
47.	bromoform (tribromomethane)	0.010	3	5	5			
48.	dichlorobromomethane	0.010	3	5	5			
49.	trichlorofluoromethane	0.010	3	5	5			
50.	dichlorodifluoromethane	0.010	3	5	5			
51.	chlorodibromomethane	0.010	3	5	5			
52.	hexachlorobutadiene	0.010	3	3	3			
53.	hexachlorocyclopentadiene	0.010	3	3	3			
54.	isophorone	0.010	3	3	3			
55.	naphthalene	0.010	3	3	3			
56.	nitrobenzene	0.010	3	3	3			
57.	2-nitrophenol	0.010	3	3	3			
58.	4-nitrophenol	0.010	3	3	3			
59.	2,4-dinitrophenol	0.010	3	3	3			
60.	4,6-dinitro-o-cresol	0.010	3	3	3			
61.	N-nitrosodimethylamine	0.010	3	3	3			
62.	N-nitrosodiphenylamine	0.010	3	3	3			
63.	N-nitrosodi-n-propylamine	0.010	3	3	3			
64.	pentachlorophenol	0.010	3	3	3			
65.	phenol	0.010	3	3	3			
66.	bis (2-ethylhexyl) phthalate	0.010	3	3	3			
67.	butyl benzyl phthalate	0.010	3	3	3			
68.	di-n-butyl phthalate	0.010	3	3	3			
69.	di-n-octyl phthalate	0.010	3	3	3			
70.	diethyl phthalate	0.010	3	3	3			
71.	dimethyl phthalate	0.010	3	3	3			
72.	benzo(a)anthracene	0.010	3	3	3			
73.	benzo(a)pyrene	0.010	3	3	3			
74.	benzo(b)fluoranthene	0.010	3	3	3			
75.	benzo(k)fluoranthene	0.010	3	3	3			
76.	chrysene	0.010	3	3	3			
77.	acenaphthylene	0.010	3	3	3			
78.	anthracene (a)	0.010	3	3	3			

Table V-40 (Continued)

FREQUENCY OF OCCURRENCE OF TOXIC POLLUTANTS
EXTRUSION SOLUTION HEAT TREATMENT CONTACT COOLING WATER
RAW WASTEWATER

	Pollutant	Analytical Quantification Level (mg/l)	Number of Streams Analyzed	Number of Samples Analyzed	Number of Times Observed in Samples (mg/l) ND-0.010	0.011-0.100	0.101-1.000	1.000+
79.	benzo(ghi)perylene	0.010	3	3	3			
80.	fluorene	0.010	3	3	3			
81.	phenanthrene (a)	0.010	-	-				
82.	dibenzo(a,h)anthracene	0.010	3	3	3			
83.	indeno (1,2,3-c,d)pyrene	0.010	3	3	3			
84.	pyrene	0.010	3	3	3			
85.	tetrachloroethylene	0.010	3	5	5			
86.	toluene	0.010	3	5	5			
87.	trichloroethylene	0.010	3	5	5			
88.	vinyl chloride (chloroethylene)	0.010	3	5	5			
89.	aldrin	0.005	3	3	3			
90.	dieldrin	0.005	3	3	3			
91.	chlordane	0.005	3	3	3			
92.	4,4'-DDT	0.005	3	3	3			
93.	4,4'-DDE	0.005	3	3	3			
94.	4,4'-DDD	0.005	3	3	3			
95.	alpha-endosulfan	0.005	3	3	3			
96.	beta-endosulfan	0.005	3	3	3			
97.	endosulfan sulfate	0.005	3	3	3			
98.	endrin	0.005	3	3	3			
99.	endrin aldehyde	0.005	3	3	3			
100.	heptachlor	0.005	3	3	3			
101.	heptachlor epoxide	0.005	3	3	3			
102.	alpha-BHC	0.005	3	3	3			
103.	beta-BHC	0.005	3	3	3			
104.	gamma-BHC	0.005	3	3	3			
105.	delta-BHC	0.005	3	3	3			
106.	PCB-1242 (b)	0.005	3	3	3			
107.	PCB-1254 (b)	0.005	-	-				
108.	PCB-1221 (b)	0.005	-	-				
109.	PCB-1232 (b)	0.005	-	-				
110.	PCB-1248 (c)	0.005	3	3	3			
111.	PCB-1260 (c)	0.005	-	-				
112.	PCB-1016 (c)	0.005	-	-				
113.	toxaphene	0.005	3	3	3			
114.	antimony	0.100	2	4	3	1		
115.	arsenic	0.010	4	6	4	2		
116.	asbestos	10 MFL	0	0				

Table V-40 (Continued)

FREQUENCY OF OCCURRENCE OF TOXIC POLLUTANTS
EXTRUSION SOLUTION HEAT TREATMENT CONTACT COOLING WATER
RAW WASTEWATER

Pollutant	Analytical Quantification Level (mg/l)	Number of Streams Analyzed	Number of Samples Analyzed	Number of Times Observed in Samples (mg/l)			
				ND-0.010	0.011-0.100	0.101-1.000	1.000+
117. beryllium	0.010	4	6	6			
118. cadmium	0.002	4	6	6			
119. chromium (total)	0.005	4	6	4	1		1
120. copper	0.009	4	6	2	4		
121. cyanide (total)	0.100	4	6	3	3		
122. lead	0.020	4	6	5	1		
123. mercury	0.0001	4	6	6			
124. nickel	0.005	4	6	4	2		
125. selenium	0.01	2	4	2	1	1	
126. silver	0.02	2	4	4			
127. thallium	0.100	2	4	4			
128. zinc	0.050	4	6		6		
129. 2,3,7,8-tetrachlorodibenzo-p-dioxin	0.005	0	0				

(a), (b), (c) Reported together.

Table V-41

SAMPLING DATA
EXTRUSION SOLUTION HEAT TREATMENT CONTACT COOLING WATER
RAW WASTEWATER

	Pollutant	Stream Code	Sample Type	Source	Concentrations (mg/l) Day 1	Day 2	Day 3	Average
Toxic Pollutants								
4.	benzene	N-2	1	ND	ND	ND	ND	
		R-5	1	ND	ND			
		V-6	1	0.004	0.005			0.005
11.	1,1,1-trichloroethane	N-2	1	ND	ND	ND	ND	
		R-5	1	ND	ND			
		V-6	1	ND	0.002			0.002
23.	chloroform	N-2	1	*	ND	ND	ND	
		R-5	1	0.040	ND			
		V-6	1	ND	0.002			0.002
44.	methylene chloride	N-2	1	ND	*	*	0.630	0.210
		R-5	1	*	0.010			0.010
		V-6	1	0.015	0.021			0.021
66.	bis(2-ethylhexyl) phthalate	N-2	6	ND	*			*
		R-5	6	*	*			*
		V-6	1	0.008	0.008			0.008
86.	toluene	N-2	1	ND	ND	ND	ND	
		R-5	1	ND	ND			
		V-6	1	0.002	0.005			0.005
114.	antimony	V-6	1	<0.001	0.002			0.002
		W-4	1	0.003	0.032	<0.001	0.009	<0.014
115.	arsenic	N-2	6	<0.0002	<0.0002			<0.0002
		R-5	6	0.0037	0.0032			0.0032
		V-6	1	<0.005	<0.005			<0.005
		W-4	1	<0.005	0.020	<0.005	0.018	<0.014
118.	cadmium	N-2	6	<0.0005	<0.0005			<0.0005
		R-5	6	<0.0005	0.0011			0.0011
		V-6	1	<0.001	0.002			0.002
		W-4	1	<0.001	<0.001	<0.001	<0.001	<0.001
119.	chromium	N-2	6	<0.001	0.018			0.018
		R-5	6	<0.001	5.100			5.100
		V-6	1	<0.001	0.005			0.005
		W-4	1	0.004	0.004	0.006	0.003	0.004
120.	copper	N-2	6	0.008	0.015			0.015
		R-5	6	0.010	0.013			0.013
		V-6	1	0.027	0.024			0.024
		W-4	1	0.010	0.008	0.001	0.060	0.023

Table V-41 (Continued)

SAMPLING DATA
EXTRUSION SOLUTION HEAT TREATMENT CONTACT COOLING WATER
RAW WASTEWATER

Pollutant	Stream Code	Sample Type	Source	Concentrations (mg/l) Day 1	Day 2	Day 3	Average
121. cyanide	N-2	6		<0.02			<0.02
	R-5	1		<0.02			<0.02
	V-6	1	0.0042	0.010			0.010
	W-4	1	0.030	0.015	0.013	0.020	0.016
122. lead	N-2	6	0.010	0.012			0.012
	R-5	6	<0.001	0.004			0.004
	V-6	1	0.079	0.003			0.003
	W-4	1	0.009	0.004	0.004	0.008	0.005
123. mercury	N-2	6	0.0041	0.009			0.009
	R-5	6	0.0007	<0.0001			<0.0001
	V-6	1	<0.0002	<0.0002			<0.0002
	W-4	1	<0.002	<0.002	<0.002	<0.002	<0.002
124. nickel	N-2	6	<0.001	<0.001			<0.001
	R-5	6	<0.001	0.018			0.018
	V-6	1	0.009	0.038			0.038
	W-4	1	0.060	<0.001	<0.001	<0.001	<0.001
125. selenium	V-6	1	0.020	0.24			0.24
	W-4	1	0.015	<0.005	<0.005	0.013	<0.008
127. thallium	V-6	1	<0.001	<0.001			<0.001
	W-4	1	<0.001	<0.001	<0.001	0.002	<0.001
128. zinc	N-2	6	<0.010	0.038			0.038
	R-5	6	0.053	0.038			0.038
	V-6	1	0.50	0.08			0.08
	W-4	1	0.03	0.03	0.03	0.03	0.03
Nonconventional							
alkalinity	N-2	6		110			110
	R-5	6		34			34
	V-6	1		280			280
	W-4	1	170	150	160	160	160
aluminum	N-2	6	<0.500	<0.500			<0.500
	R-5	6	<0.500	0.540			0.540
	V-6	1	0.09	0.20			0.20
	W-4	1	0.06	0.24	0.58	1.4	0.7
calcium	N-2	6	28	38			38
	R-5	6	60	58			58
	V-6	1	9.8	78			78
	W-4	1	55	29	54	31	38

Table V-41 (Continued)

SAMPLING DATA
EXTRUSION SOLUTION HEAT TREATMENT CONTACT COOLING WATER
RAW WASTEWATER

Pollutant	Stream Code	Sample Type	Source	Concentrations (mg/l) Day 1	Day 2	Day 3	Average
chemical oxygen demand (COD)	N-2	6	5	7			7
	R-5	6		20			20
	V-6	1	<1	4			4
	W-4	1	12	3.8	7.5	3.9	5.1
magnesium	N-2	6	4.39	5.3			5.3
	R-5	6	22.1	24.5			24.5
	V-6	1	63	50			50
	W-4	1	19	24	28	18	23
phenols (total; by 4-AAP method)	N-2	6	ND	0.014			0.014
	R-5	1		0.007			0.007
	V-6	1	0.062	0.130			0.130
	W-4	1	1.0	0.088	0.010	0.013	0.037
sulfate	N-2	6		7			7
	R-5	6		120			120
	V-6	1		43			43
	W-4	1	81	86	77	92	85
total dissolved solids	N-2	6		160			160
	R-5	6		580			580
	V-6	1		390			390
	W-4	1	3	320	240	400	320
total organic carbon (TOC)	N-2	6	2.7	1.8			1.8
	R-5	6		2.7			2.7
	V-6	1	4.7	28			28
	W-4	1	0	5	10	6	7
Conventional							
oil and grease	N-2	1	<5	68	14		41
	V-6	1	16	5.8			5.8
	W-4	1	6.6	4.0	1.5	4.8	3.4
suspended solids	N-2	6	<2	<2			<2
	R-5	6		<2			<2
	V-6	1		11			11
	W-4	1	<1	11	<1	<1	<4
pH (standard units)	N-2	1	7.1	7.3	7.3	7.2	
	R-5	6		7.3			
	V-6	1	7.3	7.2			
	W-4	1	7.7	7.3	7.7		

Table V-42

FORGING SOLUTION HEAT TREATMENT CONTACT COOLING WATER

Plant	Water Use l/kkg	Water Use gal/ton	Percent Recycle	Wastewater l/kkg	Wastewater gal/ton
1	833.9	200.0	0	0	0
2	1,151	276.0	0	1,109	266.0
3	2,956	709.0	*	2,148	515.2
4	2,502	600.0	0	2,502	600.0
5	3,235	776.0	0	3,235	776.0
6	4,169	1,000	0	3,752	900
7	21,120	5,065	0	21,120	5,065
8	32,230	7,730	0	32,230	7,730
9	*	*	*	32,320	7,752
10	*	*	0	*	*
11	*	*	*	*	*
12	*	*	0	*	*

*Data not available.

Statistical Summary

Minimum	833.9	200.0	0	0
Maximum	32,230	7,730	32,320	7,752
Mean	8,524	2,045	10,940	2,623
Median	3,096	742.5	3,235	776.0
Sample:	8 of 12 plants		9 of 12 plants	
Nonzero Mean	8,524	2,045	12,300	2,951
Sample:	8 of 12 plants		8 of 12 plants	

Table V-43

FREQUENCY OF OCCURRENCE OF TOXIC POLLUTANTS
FORGING SOLUTION HEAT TREATMENT CONTACT COOLING WATER
RAW WASTEWATER

	Pollutant	Analytical Quantification Level (mg/l)	Number of Streams Analyzed	Number of Samples Analyzed	Number of Times Observed in Samples (mg/l)			
					ND-0.010	0.011-0.100	0.101-1.000	1.000+
1.	acenaphthene	0.010	4	6	6			
2.	acrolein	0.010	3	5	5			
3.	acrylonitrile	0.010	3	5	5			
4.	benzene	0.010	3	5	5			
5.	benzidine	0.010	4	6	6			
6.	carbon tetrachloride	0.010	3	5	5			
7.	chlorobenzene	0.010	3	5	5			
8.	1,2,4-trichlorobenzene	0.010	4	6	6			
9.	hexachlorobenzene	0.010	4	6	6			
10.	1,2-dichloroethane	0.010	3	5	5			
11.	1,1,1-trichloroethane	0.010	3	5	5			
12.	hexachloroethane	0.010	4	6	6			
13.	1,1-dichloroethane	0.010	3	5	5			
14.	1,1,2-trichloroethane	0.010	3	5	5			
15.	1,1,2,2-tetrachloroethane	0.010	3	5	5			
16.	chloroethane	0.010	3	5	5			
17.	bis(chloromethyl)ether	0.010	3	5	5			
18.	bis(chloroethyl)ether	0.010	4	6	6			
19.	2-chloroethyl vinyl ether	0.010	3	5	5			
20.	2-chloronaphthalene	0.010	4	6	6			
21.	2,4,6-trichlorophenol	0.010	4	6	6			
22.	p-chloro-m-cresol	0.010	4	6	6			
23.	chloroform	0.010	3	5	3	2		
24.	2-chlorophenol	0.010	4	6	6			
25.	1,2-dichlorobenzene	0.010	4	6	6			
26.	1,3-dichlorobenzene	0.010	4	6	6			
27.	1,4-dichlorobenzene	0.010	4	6	6			
28.	3,3'-dichlorobenzidine	0.010	4	6	6			
29.	1,1-dichloroethylene	0.010	3	5	5			
30.	1,2-trans-dichloroethylene	0.010	3	5	5			
31.	2,4-dichlorophenol	0.010	4	6	6			
32.	1,2-dichloropropane	0.010	3	5	5			
33.	1,3-dichloropropene	0.010	3	5	5			
34.	2,4-dimethylphenol	0.010	4	6	6			
35.	2,4-dinitrotoluene	0.010	4	6	6			
36.	2,6-dinitrotoluene	0.010	4	6	6			
37.	1,2-diphenylhydrazine	0.010	4	6	6			
38.	ethylbenzene	0.010	3	5	5			
39.	fluoranthene	0.010	4	6	6			

Table V-43 (Continued)

FREQUENCY OF OCCURRENCE OF TOXIC POLLUTANTS
FORGING SOLUTION HEAT TREATMENT CONTACT COOLING WATER
RAW WASTEWATER

	Pollutant	Analytical Quantification Level (mg/l)	Number of Streams Analyzed	Number of Samples Analyzed	Number of Times Observed in Samples (mg/l)			
					ND-0.010	0.011-0.100	0.101-1.000	1.000+
40.	4-chlorophenyl phenyl ether	0.010	4	6	6			
41.	4-bromophenyl phenyl ether	0.010	4	6	6			
42.	bis(2-chloroisopropyl)ether	0.010	4	6	6			
43.	bis(2-chloroethoxy)methane	0.010	4	6	6			
44.	methylene chloride	0.010	3	5	4	1		
45.	methyl chloride (chloromethane)	0.010	3	5	5			
46.	methyl bromide (bromomethane)	0.010	3	5	5			
47.	bromoform (tribromomethane)	0.010	3	5	4	1		
48.	dichlorobromomethane	0.010	3	5	5			
49.	trichlorofluoromethane	0.010	3	5	5			
50.	dichlorodifluoromethane	0.010	3	5	5			
51.	chlorodibromomethane	0.010	3	5	5			
52.	hexachlorobutadiene	0.010	4	6	6			
53.	hexachlorocyclopentadiene	0.010	4	6	6			
54.	isophorone	0.010	4	6	6			
55.	naphthalene	0.010	4	6	6			
56.	nitrobenzene	0.010	4	6	6			
57.	2-nitrophenol	0.010	4	6	6			
58.	4-nitrophenol	0.010	4	6	6			
59.	2,4-dinitrophenol	0.010	4	6	6			
60.	4,6-dinitro-o-cresol	0.010	4	6	6			
61.	N-nitrosodimethylamine	0.010	4	6	6			
62.	N-nitrosodiphenylamine	0.010	4	6	6			
63.	N-nitrosodi-n-propylamine	0.010	4	6	6			
64.	pentachlorophenol	0.010	4	6	6			
65.	phenol	0.010	4	6	6			
66.	bis (2-ethylhexyl) phthalate	0.010	4	6	4	1	1	
67.	butyl benzyl phthalate	0.010	4	6	6			
68.	di-n-butyl phthalate	0.010	4	6	6			
69.	di-n-octyl phthalate	0.010	4	6	6			
70.	diethyl phthalate	0.010	4	6	6			
71.	dimethyl phthalate	0.010	4	6	6			
72.	benzo(a)anthracene	0.010	4	6	6			
73.	benzo(a)pyrene	0.010	4	6	6			
74.	benzo(b)fluoranthene	0.010	4	6	6			
75.	benzo(k)fluoranthene	0.010	4	6	6			
76.	chrysene	0.010	4	6	6			
77.	acenaphthylene	0.010	4	6	6			
78.	anthracene (a)	0.010	4	6	6			

Table V-43 (Continued)

FREQUENCY OF OCCURRENCE OF TOXIC POLLUTANTS
FORGING SOLUTION HEAT TREATMENT CONTACT COOLING WATER
RAW WASTEWATER

	Pollutant	Analytical Quantification Level (mg/l)	Number of Streams Analyzed	Number of Samples Analyzed	Number of Times Observed in Samples (mg/l) ND-0.010	0.011-0.100	0.101-1.000	1.000+
79.	benzo(ghi)perylene	0.010	4	6	6			
80.	fluorene	0.010	4	6	6			
81.	phenanthrene (a)	0.010	-	-				
82.	dibenzo(a,h)anthracene	0.010	4	6	6			
83.	indeno (1,2,3-c,d)pyrene	0.010	4	6	6			
84.	pyrene	0.010	4	6	6			
85.	tetrachloroethylene	0.010	3	5	5			
86.	toluene	0.010	3	5	5			
87.	trichloroethylene	0.010	3	5	5			
88.	vinyl chloride (chloroethylene)	0.010	3	5	5			
89.	aldrin	0.005	4	4	4			
90.	dieldrin	0.005	4	4	4			
91.	chlordane	0.005	4	4	4			
92.	4,4'-DDT	0.005	4	4	4			
93.	4,4'-DDE	0.005	4	4	4			
94.	4,4'-DDD	0.005	4	4	4			
95.	alpha-endosulfan	0.005	4	4	4			
96.	beta-endosulfan	0.005	4	4	4			
97.	endosulfan sulfate	0.005	4	4	4			
98.	endrin	0.005	4	4	4			
99.	endrin aldehyde	0.005	4	4	4			
100.	heptachlor	0.005	4	4	4			
101.	heptachlor epoxide	0.005	4	4	4			
102.	alpha-BHC	0.005	4	4	4			
103.	beta-BHC	0.005	4	4	4			
104.	gamma-BHC	0.005	4	4	4			
105.	delta-BHC	0.005	4	4	4			
106.	PCB-1242 (b)	0.005	4	4	4			
107.	PCB-1254 (b)	0.005	-	-				
108.	PCB-1221 (b)	0.005	-	-				
109.	PCB-1232 (b)	0.005	-	-				
110.	PCB-1248 (c)	0.005	4	4	4			
111.	PCB-1260 (c)	0.005	-	-				
112.	PCB-1016 (c)	0.005	-	-				
113.	toxaphene	0.005	4	4	4			
114.	antimony	0.100	5	11	10	1		
115.	arsenic	0.010	8	12	11	1		
116.	asbestos	10 MFL	0	0				

Table V-43 (Continued)

FREQUENCY OF OCCURRENCE OF TOXIC POLLUTANTS
FORGING SOLUTION HEAT TREATMENT CONTACT COOLING WATER
RAW WASTEWATER

Pollutant	Analytical Quantification Level (mg/l)	Number of Streams Analyzed	Number of Samples Analyzed	Number of Times Observed in Samples (mg/l)			
				ND-0.010	0.011-0.100	0.101-1.000	1.000+
117. beryllium	0.010	8	12	12			
118. cadmium	0.002	8	12	11	1		
119. chromium (total)	0.005	8	12	4	4	2	2
120. copper	0.009	8	12	2	9	1	
121. cyanide (total)	0.100	8	12	6			6
122. lead	0.020	8	12	6	4	1	1
123. mercury	0.0001	8	12	12			
124. nickel	0.005	8	12	11	1		
125. selenium	0.01	5	7	7			
126. silver	0.02	5	7	7			
127. thallium	0.100	5	7	5	2		
128. zinc	0.050	8	12		9	2	1
129. 2,3,7,8-tetrachlorodibenzo-p-dioxin	0.005	0	0				

(a), (b), (c) Reported together.

Table V-44

SAMPLING DATA
FORGING SOLUTION HEAT TREATMENT CONTACT COOLING WATER
RAW WASTEWATER

Pollutant	Stream Code	Sample Type	Source	Concentrations (mg/l) Day 1	Day 2	Day 3	Average
Toxic Pollutants							
23. chloroform	J-3	1	0.019	0.016	*	0.043	0.023
	Q-3	1	ND	ND			
	R-4	1	0.040	ND			
44. methylene chloride	J-3	1	ND	0.015	*	*	0.005
	Q-3	1	<0.010	*			*
	R-4	1	<0.005	*			*
47. bromoform	J-3	1	ND	ND	ND	0.016	0.016
	Q-3	1	ND	ND			
	R-4	1	ND	ND			
66. bis(2-ethylhexyl) phthalate	A-2	1	0.200	0.890			0.890
	J-3	1,2,2	ND	*	*	*	*
	Q-3	1	<0.010	0.010	*	*	0.003
	R-4	6	<0.005	0.050			0.050
114. antimony	A-2	1	<0.1	<0.1			<0.1
	W-8	1	0.003	<0.001	0.003	<0.001	<0.002
	W-9	1	0.003	0.008			0.008
	W-10	1	0.003	0.007			0.007
	W-11	1	0.003	0.038			0.038
115. arsenic	A-2	1	<0.01	<0.01			<0.01
	J-3	1	<0.01	<0.01	<0.01	<0.01	<0.01
	Q-3	1	0.0028	0.037			0.037
	R-4	6	0.0037	0.0039			0.0039
	W-8	1	<0.005	<0.005	<0.005	<0.005	<0.005
	W-9	1	<0.005	0.001			0.001
	W-10	1	<0.005	<0.005			<0.005
	W-11	1	<0.005	0.001			0.001
118. cadmium	A-2	1	<0.002	<0.002			<0.002
	J-3	1,2,2	<0.01	<0.01	<0.01	<0.01	<0.01
	Q-3	1	<0.0005	0.0011			0.0011
	R-4	6	<0.0005	0.012			0.012
	W-8	1	<0.001	<0.001	0.002	0.001	<0.001
	W-9	1	<0.001	<0.001			<0.001
	W-10	1	<0.001	<0.001			<0.001
	W-11	1	<0.001	<0.001			<0.001

Table V-44 (Continued)

SAMPLING DATA
FORGING SOLUTION HEAT TREATMENT CONTACT COOLING WATER
RAW WASTEWATER

Pollutant	Stream Code	Sample Type	Source	Concentrations (mg/l) Day 1	Day 2	Day 3	Average
119. chromium	A-2	1	<0.005	0.007			0.007
	J-3	1,2,2	<0.03	0.05	0.13	0.13	0.01
	Q-3	1	0.004	72			72
	R-4	6	<0.0001	46			46
	W-8	1	0.004	0.012	0.002	0.004	0.006
	W-9	1	0.004	0.006			0.006
	W-10	1	0.004	0.014			0.014
	W-11	1	0.004	0.030			0.030
120. copper	A-2	1	0.01	0.1			0.1
	J-3	1,2,2	0.03	<0.02	0.07	0.06	<0.05
	Q-3	1	0.026	0.07			0.07
	R-4	6	0.01	0.38			0.38
	W-8	1	0.010	0.039	0.019	0.019	0.026
	W-9	1	0.010	0.08			0.08
	W-10	1	0.010	0.07			0.07
	W-11	1	0.010	0.005			0.005
121. cyanide	A-2	1		<0.001			<0.001
	J-3	1		0.002	<0.002	0.006	<0.003
	Q-3	1		<0.02			<0.02
	R-4	1		<0.02			<0.02
	W-8	1	30	15	19	18	17
	W-9	1	30	2.2			2.2
	W-10	1	30	530			530
	W-11	1	30	15			15
122. lead	A-2	1	<0.02	0.06			0.06
	J-3	1,2,2	<0.050	<0.05	<0.05	<0.05	<0.05
	Q-3	1	0.006	ND			
	R-4	6	<0.001	17			17
	W-8	1	0.009	0.007	0.032	0.250	0.096
	W-9	1	0.009	0.019			0.019
	W-10	1	0.009	0.046			0.046
	W-11	1	0.009	0.005			0.005
123. mercury	A-2	1	0.0006	0.0005			0.0005
	J-3	1,2,2	<0.0004	<0.0004	<0.0002	<0.0002	<0.0003
	Q-3	1	<0.0001	<0.0001			<0.0001
	R-4	6	0.0007	<0.00005			<0.00005
	W-8	1	<0.0002	<0.0002	<0.002	<0.002	<0.001
	W-9	1	<0.0002	<0.0002			<0.0002
	W-10	1	<0.0002	<0.0002			<0.0002
	W-11	1	<0.0002	<0.0002			<0.0002

Table V-44 (Continued)

SAMPLING DATA
FORGING SOLUTION HEAT TREATMENT CONTACT COOLING WATER
RAW WASTEWATER

Pollutant	Stream Code	Sample Type	Source	Concentrations (mg/l) Day 1	Day 2	Day 3	Average
124. nickel	A-2	1	<0.005	<0.005			<0.005
	J-3	1,2,2	<0.02	<0.02	<0.02	<0.02	<0.02
	Q-3	1	<0.001	0.006			0.006
	R-4	6	<0.001	<0.008			<0.008
	W-8	1	0.060	0.018	<0.001	<0.001	<0.007
	W-9	1	0.060	<0.001			<0.001
	W-10	1	0.060	0.006			0.006
	W-11	1	0.060	0.004			0.004
125. selenium	A-2	1	<0.01	<0.01			<0.01
	W-8	1	0.015	<0.005	0.007	<0.005	<0.006
	W-9	1	0.015	<0.005			<0.005
	W-10	1	0.015	<0.005			<0.005
	W-11	1	0.015	<0.005			<0.005
127. thallium	A-2	1	<0.1	<0.1			<0.1
	W-8	1	<0.001	0.002	<0.001	0.042	<0.015
	W-9	1	<0.001	0.006			0.006
	W-10	1	<0.001	0.013			0.013
	W-11	1	<0.001	<0.001			<0.001
128. zinc	A-2	1	0.06	0.05			0.05
	J-3	1,2,2	0.04	0.03	0.07	0.08	0.06
	Q-3	1	<0.01	0.19			0.19
	R-4	6	0.053	5.2			5.2
	W-8	1	0.03	0.03	0.03	0.03	0.03
	W-9	1	0.03	0.02			0.02
	W-10	1	0.03	0.18			0.18
	W-11	1	0.03	0.03			0.03
Nonconventional							
alkalinity	A-2	1		92			92
	J-3	1,2,2	117	140	100	109	116
	Q-3	1		170			170
	R-4	6		170			170
	W-8	1	170	100	100	140	113
	W-9	1	170	200			200
	W-10	1	170	1,200			1,200
	W-11	1	170	140			140
aluminum	A-2	1	<0.09	<0.15			<0.15
	J-3	1,2,2	<0.1	0.9	1.2	1.3	1.1
	C-3	1	<0.5	1.2			1.2
	R-4	6	<0.5	9			9
	W-8	1	0.06	0.86	0.78	0.14	0.59
	W-9	1	0.06	0.90			0.90
	W-10	1	0.06	1.0			1.0
	W-11	1	0.06	0.45			0.45

Table V-44 (Continued)

SAMPLING DATA
FORGING SOLUTION HEAT TREATMENT CONTACT COOLING WATER
RAW WASTEWATER

Pollutant	Stream Code	Sample Type	Source	Concentrations (mg/l) Day 1	Day 2	Day 3	Average
calcium	A-2	1	39	49			49
	J-3	1,2,2	ND	40	36	37	38
	Q-3	1	61	77			77
	R-4	6	60	80			80
	W-8	1	55	22	22	2.3	15
	W-9	1	55	14			14
	W-10	1	55	7.0			7.0
	W-11	1	5.5	28			28
chemical oxygen demand (COD)	A-2	1	8	18			18
	J-3	1,2,2	5	6	<5	<5	<5
	Q-3	1		6			6
	R-4	6		56			56
	W-8	1	12	79	15	16	37
	W-9	1	12	96			96
	W-10	1	12	3,300			3,300
	W-11	1	12	80			80
dissolved solids	A-2	1		188			188
	J-3	1,2,2	177	206	202	2,723	1,044
	Q-3	1		1,370			1,370
	R-4	6		720			720
	W-8	1	3	690	660	380	580
	W-9	1	3	1,200			1,200
	W-19	1	3	4,400			4,400
	W-11	1	3	360			360
magnesium	A-2	1	8.7	8.1			8.1
	J-3	1,2,2	ND	13	12	12	12
	Q-3	1	12.2	35			35
	R-4	6	22.1	30.5			30.5
	W-8	1	19	11	13	16	13
	W-9	1	19	9.7			9.7
	W-10	1	19	0.40			0.40
	W-11	1	19	15			15
phenols (total; by 4-AAP method)	A-2	1		0.019			0.019
	J-3	1,2,2		1.6	0.01		0.8
	Q-3	1		<0.002			<0.002
	R-4	6		0.003			0.003
	W-8	1	1.0	12.0	23.0	0.098	11.7
	W-9	1	1.0	0.17			0.17
	W-10	1	1.0	0.01			0.01
	W-11	1	1.0	0.01			0.01

Table V-44 (Continued)

SAMPLING DATA
FORGING SOLUTION HEAT TREATMENT CONTACT COOLING WATER
RAW WASTEWATER

Pollutant	Stream Code	Sample Type	Source	Concentrations (mg/l) Day 1	Day 2	Day 3	Average
sulfate	A-2	1		70			70
	J-3	1,2,2	<10	30	30	30	30
	Q-3	1		330			330
	R-4	6		190			190
	W-8	1	81	30	290	86	135
	W-9	1	81	670			670
	W-10	1	81	110			110
	W-11	1	81	70			70
total organic carbon (TOC)	A-2	1	9	14			14
	J-3	1,2,2	<1	<1	4	1	<2
	Q-3	1		3.4			3.4
	R-4	6		3.4			3.4
	W-8	1	0	40	56	11	36
	W-9	1	0	10			10
	W-10	1	0	1,200			1,200
	W-11	1	0	30			30
Conventional							
oil and grease	A-2	1		14			14
	J-3	1			4	5	5
	Q-3	1		<5			<5
	R-4	1		7	248	<5	<87
	W-8	1	6.6	*	96	22	39
	W-9	1	6.6	7.3			7.3
	W-10	1	6.6	5.1			5.1
	W-11	1	6.6	3.1			3.1
suspended solids	A-2	1	<1	4			4
	J-3	1,2,2	14	34	21	12	22
	Q-3	1		7			7
	R-4	6		240			240
	W-8	1	<1	8	15	3	9
	W-9	1	<1	6			6
	W-10	1	<1	17			17
	W-11	1	<1	4			4
pH (standard units)	J-3	1		7.8	7.5	7.8	
	C-3	1		8.2			
	R-4	1		7.9	7.9	8.2	
	W-8	1	7.7	7.7	7.4	7.9	
	W-9	1	7.7	8.4			
	W-10	1	7.7	9.6			
	W-11	1	7.7	7.8			

Table V-45

DRAWING SOLUTION HEAT TREATMENT CONTACT COOLING WATER

Plant	Water Use l/kkg	Water Use gal/ton	Percent Recycle	Wastewater l/kkg	Wastewater gal/ton
1	13,430	3,220	95	0	0
2	119.2	28.60	0	119.2	28.60
3	496.2	119.0	0	328.1	78.70
4	921.4	221.0	0	921.4	221.0
5	3,002	720.0	0	3,002	720.0
6	*	*	*	27,850	6,680
7	*	*	*	*	*
8	*	*	87.5	*	*
9	*	*	*	*	*
10	*	*	*	*	*
11	*	*	*	*	*

*Data not available.

Statistical Summary

Minimum	119.2	28.6	0	0
Maximum	13,430	3,220	27,850	6,680
Mean	3,593	861.7	5,370	1,288
Median	921.4	221.0	624.8	149.9
Sample:	5 of 11 plants		6 of 11 plants	
Nonzero Mean	3,593	861.7	6,446	1,546
Sample:	5 of 11 plants		5 of 11 plants	

Table V-46

FREQUENCY OF OCCURRENCE OF TOXIC POLLUTANTS
DRAWING SOLUTION HEAT TREATMENT CONTACT COOLING WATER
RAW WASTEWATER

	Pollutant	Analytical Quantification Level (mg/l)	Number of Streams Analyzed	Number of Samples Analyzed	Number of Times Observed in Samples (mg/l)			
					ND-0.010	0.011-0.100	0.101-1.000	1.000+
1.	acenaphthene	0.010	2	6	4	2		
2.	acrolein	0.010	2	6	6			
3.	acrylonitrile	0.010	2	6	6			
4.	benzene	0.010	2	6	4	1		1
5.	benzidine	0.010	2	6	6			
6.	carbon tetrachloride	0.010	2	6	6			
7.	chlorobenzene	0.010	2	6	6			
8.	1,2,4-trichlorobenzene	0.010	2	6	6			
9.	hexachlorobenzene	0.010	2	6	6			
10.	1,2-dichloroethane	0.010	2	6	6			
11.	1,1,1-trichloroethane	0.010	2	6	6			
12.	hexachloroethane	0.010	2	6	6			
13.	1,1-dichloroethane	0.010	2	6	6			
14.	1,1,2-trichloroethane	0.010	2	6	6			
15.	1,1,2,2-tetrachloroethane	0.010	2	6	6			
16.	chloroethane	0.010	2	6	6			
17.	bis(chloromethyl)ether	0.010	2	6	6			
18.	bis(chloroethyl)ether	0.010	2	6	6			
19.	2-chloroethyl vinyl ether	0.010	2	6	6			
20.	2-chloronaphthalene	0.010	2	6	6			
21.	2,4,6-trichlorophenol	0.010	2	6	6			
22.	p-chloro-m-cresol	0.010	2	6	6			
23.	chloroform	0.010	2	6	4	1		1
24.	2-chlorophenol	0.010	2	6	6			
25.	1,2-dichlorobenzene	0.010	2	6	6			
26.	1,3-dichlorobenzene	0.010	2	6	6			
27.	1,4-dichlorobenzene	0.010	2	6	6			
28.	3,3'-dichlorobenzidine	0.010	2	6	6			
29.	1,1-dichloroethylene	0.010	2	6	6			
30.	1,2-trans-dichloroethylene	0.010	2	6	6			
31.	2,4-dichlorophenol	0.010	2	6	6			
32.	1,2-dichloropropane	0.010	2	6	6			
33.	1,3-dichloropropene	0.010	2	6	6			
34.	2,4-dimethylphenol	0.010	2	6	6			
35.	2,4-dinitrotoluene	0.010	2	6	6			
36.	2,6-dinitrotoluene	0.010	2	6	6			
37.	1,2-diphenylhydrazine	0.010	2	6	6			
38.	ethylbenzene	0.010	2	6	6			
39.	fluoranthene	0.010	2	6	6			

Table V-46 (Continued)

FREQUENCY OF OCCURRENCE OF TOXIC POLLUTANTS
DRAWING SOLUTION HEAT TREATMENT CONTACT COOLING WATER
RAW WASTEWATER

	Pollutant	Analytical Quantification Level (mg/l)	Number of Streams Analyzed	Number of Samples Analyzed	Number of Times Observed in Samples (mg/l)			
					ND-0.010	0.011-0.100	0.101-1.000	1.000+
40.	4-chlorophenyl phenyl ether	0.010	2	6	6			
41.	4-bromophenyl phenyl ether	0.010	2	6	6			
42.	bis(2-chloroisopropyl)ether	0.010	2	6	6			
43.	bis(2-chloroethoxy)methane	0.010	2	6	6			
44.	methylene chloride	0.010	2	6	2	1	2	1
45.	methyl chloride (chloromethane)	0.010	2	6	6			
46.	methyl bromide (bromomethane)	0.010	2	6	6			
47.	bromoform (tribromomethane)	0.010	2	6	6			
48.	dichlorobromomethane	0.010	2	6	6			
49.	trichlorofluoromethane	0.010	2	6	6			
50.	dichlorodifluoromethane	0.010	2	6	6			
51.	chlorodibromomethane	0.010	2	6	6			
52.	hexachlorobutadiene	0.010	2	6	6			
53.	hexachlorocyclopentadiene	0.010	2	6	6			
54.	isophorone	0.010	2	6	6			
55.	naphthalene	0.010	2	6	6			
56.	nitrobenzene	0.010	2	6	6			
57.	2-nitrophenol	0.010	2	6	6			
58.	4-nitrophenol	0.010	2	6	6			
59.	2,4-dinitrophenol	0.010	2	6	6			
60.	4,6-dinitro-o-cresol	0.010	2	6	6			
61.	N-nitrosodimethylamine	0.010	2	6	6			
62.	N-nitrosodiphenylamine	0.010	2	6	6			
63.	N-nitrosodi-n-propylamine	0.010	2	6	6			
64.	pentachlorophenol	0.010	2	6	6			
65.	phenol	0.010	2	6	4	2		
66.	bis (2-ethylhexyl) phthalate	0.010	2	6	3	2	1	
67.	butyl benzyl phthalate	0.010	2	6	6			
68.	di-n-butyl phthalate	0.010	2	6	4	1	1	
69.	di-n-octyl phthalate	0.010	2	6	6			
70.	diethyl phthalate	0.010	2	6	4	1	1	
71.	dimethyl phthalate	0.010	2	6	4	2		
72.	benzo(a)anthracene	0.010	2	6	6			
73.	benzo(a)pyrene	0.010	2	6	6			
74.	benzo(b)fluoranthene	0.010	2	6	6			
75.	benzo(k)fluoranthene	0.010	2	6	6			
76.	chrysene	0.010	2	6	6			
77.	acenaphthylene	0.010	2	6	6			
78.	anthracene (a)	0.010	2	6	6			

Table V-46 (Continued)

FREQUENCY OF OCCURRENCE OF TOXIC POLLUTANTS
DRAWING SOLUTION HEAT TREATMENT CONTACT COOLING WATER
RAW WASTEWATER

	Pollutant	Analytical Quantification Level (mg/l)	Number of Streams Analyzed	Number of Samples Analyzed	Number of Times Observed in Samples (mg/l) ND-0.010	0.011-0.100	0.101-1.000	1.000+
79.	benzo(ghi)perylene	0.010	2	6	6			
80.	fluorene	0.010	2	6	6			
81.	phenanthrene (a)	0.010	-	-				
82.	dibenzo(a,h)anthracene	0.010	2	6	6			
83.	indeno (1,2,3-c,d)pyrene	0.010	2	6	6			
84.	pyrene	0.010	2	6	6			
85.	tetrachloroethylene	0.010	2	6	5			1
86.	toluene	0.010	2	6	2	3	1	
87.	trichloroethylene	0.010	2	6	5			1
88.	vinyl chloride (chloroethylene)	0.010	2	6	6			
89.	aldrin	0.005	2	4	4			
90.	dieldrin	0.005	2	4	4			
91.	chlordane	0.005	2	4	4			
92.	4,4'-DDT	0.005	2	4	4			
93.	4,4'-DDE	0.005	2	4	4			
94.	4,4'-DDD	0.005	2	4	4			
95.	alpha-endosulfan	0.005	2	4	4			
96.	beta-endosulfan	0.005	2	4	4			
97.	endosulfan sulfate	0.005	2	4	4			
98.	endrin	0.005	2	4	4			
99.	endrin aldehyde	0.005	2	4	4			
100.	heptachlor	0.005	2	4	4			
101.	heptachlor epoxide	0.005	2	4	4			
102.	alpha-BHC	0.005	2	4	4			
103.	beta-BHC	0.005	2	4	4			
104.	gamma-BHC	0.005	2	4	4			
105.	delta-BHC	0.005	2	4	4			
106.	PCB-1242 (b)	0.005	2	4	4			
107.	PCB-1254 (b)	0.005	-	-				
108.	PCB-1221 (b)	0.005	-	-				
109.	PCB-1232 (b)	0.005	-	-				
110.	PCB-1248 (c)	0.005	2	4	4			
111.	PCB-1260 (c)	0.005	-	-				
112.	PCB-1016 (c)	0.005	-	-				
113.	toxaphene	0.005	2	4	4			
114.	antimony	0.100	4	12	11	1		
115.	arsenic	0.010	4	12	9	2	1	
116.	asbestos	10 MFL	0	0				

Table V-46 (Continued)

FREQUENCY OF OCCURRENCE OF TOXIC POLLUTANTS
DRAWING SOLUTION HEAT TREATMENT CONTACT COOLING WATER
RAW WASTEWATER

Pollutant	Analytical Quantification Level (mg/l)	Number of Streams Analyzed	Number of Samples Analyzed	Number of Times Observed in Samples (mg/l)			
				ND-0.010	0.011-0.100	0.101-1.000	1.000+
117. beryllium	0.010	4	12	12			
118. cadmium	0.002	4	12	12			
119. chromium (total)	0.005	4	12	10	2		
120. copper	0.009	4	12	3	9		
121. cyanide (total)	0.100	4	12	3	6		3
122. lead	0.020	4	12	6	5	1	
123. mercury	0.0001	4	12	10	2		
124. nickel	0.005	4	12	10	2		
125. selenium	0.01	4	12	9	3		
126. silver	0.02	4	12	8	4		
127. thallium	0.100	4	12	12			
128. zinc	0.050	4	12	3	3	6	
129. 2,3,7,8-tetrachlorodibenzo-p-dioxin	0.005	0	0				

(a), (b), (c) Reported together.

Table V-47

SAMPLING DATA
DRAWING SOLUTION HEAT TREATMENT CONTACT COOLING WATER
RAW WASTEWATER

Pollutant	Stream Code	Sample Type	Source	Concentrations (mg/l) Day 1	Day 2	Day 3	Average
Toxic Pollutants							
1. acenaphthene	E-4	1	*	ND	ND	0.012	0.012
	V-4	2	ND	ND	0.018	ND	0.018
4. benzene	E-4	1	ND	6.300	0.007	ND	3.154
	V-4	1	0.004	0.064	0.008	0.007	0.026
11. 1,1,1-trichloroethane	E-4	1	ND	ND	0.003	ND	0.003
	V-4	1	ND	0.010	0.007	0.006	0.008
23. chloroform	E-4	1	<0.100	35.000	0.030	*	11.677
	V-4	1	ND	0.005	ND	ND	0.005
38. ethylbenzene	E-4	1	ND	ND	ND	ND	
	V-4	1	ND	ND	0.007	0.004	0.006
44. methylene chloride	E-4	1	0.017	92.00	0.170	0.120	30.763
	V-4	1	0.015	0.056	0.010	0.008	0.025
65. phenol	E-4	1	*	ND	ND	0.031	0.031
	V-4	2	ND	0.021	ND	ND	0.021
66. bis(2-ethylhexyl phthalate)	E-4	1	*	0.840	0.036	0.048	0.308
	V-4	2	0.008	ND	0.002	0.002	0.002
68. di-n-butyl phthalate	E-4	1	*	0.990	ND	*	0.495
	V-4	2	ND	ND	0.017	ND	0.017
70. diethyl phthalate	E-4	1	*	0.470	ND	ND	0.470
	V-4	2	ND	ND	0.033	ND	0.033
71. dimethyl phthalate	E-4	1	*	ND	ND	0.050	0.050
	V-4	2	ND	ND	0.011	ND	0.011
85. tetrachloroethylene	E-4	1	ND	12.000	ND	*	6.000
	V-4	1	ND	ND	ND	ND	
86. toluene	E-4	1	ND	0.95	*	ND	0.475
	V-4	1	0.002	0.014	0.041	0.029	0.028
87. trichloroethylene	E-4	1	ND	1.300	ND	*	0.650
	V-4	1	ND	ND	ND	ND	

Table V-47 (Continued)

SAMPLING DATA
DRAWING SOLUTION HEAT TREATMENT CONTACT COOLING WATER
RAW WASTEWATER

Pollutant	Stream Code	Sample Type	Source	Concentrations (mg/l) Day 1	Day 2	Day 3	Average
114. antimony	E-4	1	<0.100	<0.200	<0.100	<0.100	<0.133
	V-4	2	<0.001	<0.001	0.001	<0.001	<0.001
	W-2	2	0.003	0.002	<0.001	<0.001	<0.001
	W-3	2	0.003	0.004	0.030	<0.001	<0.012
115. arsenic	E-4	1	<0.01	<0.01	<0.01	<0.01	<0.01
	V-4	2	<0.005	<0.005	0.24	<0.005	<0.08
	W-2	2	<0.005	<0.005	0.010	<0.005	<0.007
	W-3	2	<0.005	0.006	0.011	0.012	0.010
118. cadmium	E-4	1	<0.002	<0.002	<0.002	<0.002	<0.002
	V-4	2	<0.001	<0.001	0.001	<0.001	<0.001
	W-2	2	<0.001	<0.001	0.001	<0.001	<0.001
	W-3	2	<0.001	<0.001	0.002	0.002	<0.002
119. chromium	E-4	1	<0.005	<0.005	0.01	<0.005	<0.01
	V-4	2	<0.001	0.002	0.004	0.004	0.003
	W-2	2	0.004	0.003	0.015	0.003	0.007
	W-3	2	0.004	0.013	0.004	0.009	0.009
120. copper	E-4	1	<0.009	0.020	<0.009	0.020	<0.016
	V-4	2	0.027	0.012	0.015	0.010	0.012
	W-2	2	0.010	0.018	0.017	0.009	0.015
	W-3	2	0.010	0.070	0.011	0.070	0.050
121. cyanide	E-4	1		1.3	1.38	1.26	1.3
	V-4	1	0.0042	0.0042	0.0022	0.0080	0.0048
	W-2	2	0.030	0.017	0.024	0.018	0.020
	W-3	2	0.030	0.042	0.020	0.027	0.030
122. lead	E-4	1	<0.020	<0.020	<0.020	<0.020	<0.020
	V-4	2	0.079	<0.001	0.004	<0.001	<0.002
	W-2	2	0.009	0.047	0.034	0.021	0.034
	W-3	2	0.009	0.042	0.180	0.011	0.078
123. mercury	E-4	1	0.004	0.02	0.01	0.0003	0.01
	V-4	2	<0.0002	<0.0002	<0.0002	<0.0002	<0.0002
	W-2	2	<0.0002	<0.0002	<0.0002	<0.0002	<0.0002
	W-3	2	<0.0002	<0.0002	<0.0002	<0.0002	<0.0002
124. nickel	E-4	1	<0.005	<0.005	<0.005	<0.005	<0.005
	V-4	2	0.009	0.006	0.004	0.003	0.004
	W-2	2	0.060	<0.001	0.019	0.007	<0.009
	W-3	2	0.060	<0.001	<0.001	0.013	<0.005

Table V-47 (Continued)

SAMPLING DATA
DRAWING SOLUTION HEAT TREATMENT CONTACT COOLING WATER
RAW WASTEWATER

Pollutant	Stream Code	Sample Type	Source	Concentrations (mg/l) Day 1	Day 2	Day 3	Average
125. selenium	E-4	1	<0.01	<0.01	<0.01	<0.01	<0.01
	V-4	2	0.020	0.031	0.007	<0.005	<0.014
	W-2	2	0.015	0.051	0.017	<0.005	<0.024
	W-3	2	0.015	<0.005	<0.005	<0.005	<0.005
126. silver	E-4	1	<0.02	<0.04	<0.02	<0.02	<0.03
	V-4	2	0.05	0.05	<0.001	<0.001	<0.02
	W-2	2	0.02	0.04	<0.001	<0.001	<0.01
	W-3	2	0.02	0.05	0.02	<0.001	<0.02
127. zinc	E-4	1	<0.050	<0.050	<0.050	<0.050	<0.050
	V-4	2	0.50	0.02	0.04	0.04	0.03
	W-2	2	0.03	0.21	0.19	0.22	0.21
	W-3	2	0.03	0.32	0.11	0.40	0.28
Nonconventional							
alkalinity	E-4	1		340	400	370	370
	V-4	2		280	280	280	280
	W-2	2	170	140	240	250	210
	W-3	2	170	250	240	250	250
aluminum	E-4	1	<0.09	<0.295	<0.845	<0.395	<0.512
	V-4	2	0.09	0.10	0.21	0.12	0.14
	W-2	2	0.06	0.92	0.97	0.96	0.95
	W-3	2	0.06	2.6	0.32	2.6	1.8
calcium	E-4	1	68	35	22	36	31
	V-4	2	9.8	860	78	76	338
	W-2	2	55	35	34	59	43
	W-3	2	55	66	56	36	53
chemical oxygen demand (COD)	E-4	1	<5	79,600	98,400	97,700	91,900
	V-4	2	<1	12	32	32	25
	W-2	1	12	1,900	1,500	1,900	1,800
	W-3	1	12	1,200	1,000	1,100	1,100
dissolved solids	E-4	1		5,005	8,326	13,500	8,944
	V-4	2		400	420	410	410
	W-2	2	3	680	780	780	750
	W-3	2	3	680	730	740	720

Table V-47 (Continued)

SAMPLING DATA
DRAWING SOLUTION HEAT TREATMENT CONTACT COOLING WATER
RAW WASTEWATER

Pollutant	Stream Code	Sample Type	Source	Concentrations (mg/l) Day 1	Day 2	Day 3	Average
magnesium	E-4	1	3.8	26	<9.05	30	<22
	V-4	2	63	60	55	54	56
	W-2	2	19	51	36	33	40
	W-3	2	19	21	4.4	27	17
phenolics (total by 4-AAP method)	E-4	1		0.005		0.005	0.005
	V-4	1	0.062	0.009	0.007	0.025	0.014
	W-2	1	1.00	0.150	0.400	0.300	0.283
	W-3	1	1.00	0.800	0.720	0.900	0.807
sulfate	E-4	1		400	280	298	326
	V-4	2		32	23	29	28
	W-2	2	81	98	100	97	98
	W-3	2	81	100	100	85	95
total organic carbon (TOC)	E-4	1	1	20,000	20,300	18,400	19,600
	V-4	2	4.7	14	8.2	28	17
	W-2	1	0	660	690	900	750
	W-3	1	0	450	110	500	350
Conventional							
oil and grease	E-4	1		17	18	26	20
	V-4	1	16		6.3	8.0	7.2
	W-2	1	6.6	350	370	120	280
	W-3	1	6.6	150	120	120	130
suspended solids	E-4	1	<1	21	19	17	19
	V-4	2		12	13	7	11
	W-2	2	<1	98	93	87	93
	W-3	2	<1	57	39	50	49
pH (standard units)	E-4	1		7.9	8.2	8.4	
	V-4	1	7.3	7.3	7.5	7.4	
	W-2	1	7.7	8.7			
	W-3	1	7.7	7.8	7.7		

Table V-48

CLEANING OR ETCHING BATH

Plant	Water Use l/kkg	Water Use gal/ton	Percent Recycle	Wastewater l/kkg	Wastewater gal/ton
1	*	*	**	0	0
2	*	*	**	1.430	0.3430
3	*	*	**	5.816	1.395
4	*	*	**	8.406	2.016
5	*	*	**	9.498	2.278
6	*	*	**	28.35	6.800
7	*	*	**	192.4	46.15
8	*	*	**	346.4	83.08
9	*	*	**	446.5	107.1
10	*	*	**	800.5	192.0

*Data not available.
**Not applicable.

Statistical Summary

Minimum	0	0
Maximum	800.5	192
Mean	183.9	44.12
Median	18.92	4.539
Sample:	10 of 8 plants	
Nonzero Mean	204.4	49.02
Sample:	9 of 8 plants	

Note: This table includes only plants that discharge or haul away the baths and provided enough data for calculation of the wastewater value.

Note: This table includes data from two plants which have both cleaning and etch line bath discharges.

Table V-49

FREQUENCY OF OCCURRENCE OF TOXIC POLLUTANTS
CLEANING OR ETCHING BATH
RAW WASTEWATER

	Pollutant	Analytical Quantification Level (mg/l)	Number of Streams Analyzed	Number of Samples Analyzed	Number of Times Observed in Samples (mg/l) ND-0.010	0.011-0.100	0.101-1.000	1.000+
1.	acenaphthene	0.010	6	6	6			
2.	acrolein	0.010	4	4	4			
3.	acrylonitrile	0.010	4	4	4			
4.	benzene	0.010	4	4	4			
5.	benzidine	0.010	6	6	6			
6.	carbon tetrachloride	0.010	4	4	4			
7.	chlorobenzene	0.010	4	4	4			
8.	1,2,4-trichlorobenzene	0.010	6	6	6			
9.	hexachlorobenzene	0.010	6	6	6			
10.	1,2-dichloroethane	0.010	4	4	4			
11.	1,1,1-trichloroethane	0.010	4	4	4			
12.	hexachloroethane	0.010	6	6	6			
13.	1,1-dichloroethane	0.010	4	4	4			
14.	1,1,2-trichloroethane	0.010	4	4	4			
15.	1,1,2,2-tetrachloroethane	0.010	4	4	4			
16.	chloroethane	0.010	4	4	4			
17.	bis(chloromethyl)ether	0.010	4	4	4			
18.	bis(chloroethyl)ether	0.010	6	6	6			
19.	2-chloroethyl vinyl ether	0.010	4	4	4			
20.	2-chloronaphthalene	0.010	6	6	6			
21.	2,4,6-trichlorophenol	0.010	6	6	6			
22.	p-chloro-m-cresol	0.010	6	6	5	1		
23.	chloroform	0.010	4	4	3	1		
24.	2-chlorophenol	0.010	6	6	6			
25.	1,2-dichlorobenzene	0.010	6	6	6			
26.	1,3-dichlorobenzene	0.010	6	6	6			
27.	1,4-dichlorobenzene	0.010	6	6	6			
28.	3,3'-dichlorobenzidine	0.010	6	6	6			
29.	1,1-dichloroethylene	0.010	4	4	4			
30.	1,2-trans-dichloroethylene	0.010	4	4	4			
31.	2,4-dichlorophenol	0.010	6	6	6			
32.	1,2-dichloropropane	0.010	4	4	4			
33.	1,3-dichloropropene	0.010	4	4	4			
34.	2,4-dimethylphenol	0.010	6	6	5	1		
35.	2,4-dinitrotoluene	0.010	6	6	6			
36.	2,6-dinitrotoluene	0.010	6	6	6			
37.	1,2-diphenylhydrazine	0.010	6	6	6			
38.	ethylbenzene	0.010	4	4	4			
39.	fluoranthene	0.010	6	6	5	1		

Table V-49 (Continued)

FREQUENCY OF OCCURRENCE OF TOXIC POLLUTANTS
CLEANING OR ETCHING BATH
RAW WASTEWATER

	Pollutant	Analytical Quantification Level (mg/l)	Number of Streams Analyzed	Number of Samples Analyzed	Number of Times Observed in Samples (mg/l) ND-0.010	0.011-0.100	0.101-1.000	1.000+
40.	4-chlorophenyl phenyl ether	0.010	6	6	6			
41.	4-bromophenyl phenyl ether	0.010	6	6	6			
42.	bis(2-chloroisopropyl)ether	0.010	6	6	6			
43.	bis(2-chloroethoxy)methane	0.010	6	6	6			
44.	methylene chloride	0.010	4	4	1	3		
45.	methyl chloride (chloromethane)	0.010	4	4	4			
46.	methyl bromide (bromomethane)	0.010	4	4	4			
47.	bromoform (tribromomethane)	0.010	4	4	4			
48.	dichlorobromomethane	0.010	4	4	4			
49.	trichlorofluoromethane	0.010	4	4	4			
50.	dichlorodifluoromethane	0.010	4	4	4			
51.	chlorodibromomethane	0.010	4	4	4			
52.	hexachlorobutadiene	0.010	6	6	6			
53.	hexachlorocyclopentadiene	0.010	6	6	6			
54.	isophorone	0.010	6	6	6			
55.	naphthalene	0.010	6	6	6			
56.	nitrobenzene	0.010	6	6	6			
57.	2-nitrophenol	0.010	6	6	6			
58.	4-nitrophenol	0.010	6	6	6			
59.	2,4-dinitrophenol	0.010	6	6	4		1	1
60.	4,6-dinitro-o-cresol	0.010	6	6	6			
61.	N-nitrosodimethylamine	0.010	6	6	6			
62.	N-nitrosodiphenylamine	0.010	6	6	6			
63.	N-nitrosodi-n-propylamine	0.010	6	6	6			
64.	pentachlorophenol	0.010	6	6	5	1		
65.	phenol	0.010	6	6	3	3		
66.	bis (2-ethylhexyl) phthalate	0.010	6	6	3	3		
67.	butyl benzyl phthalate	0.010	6	6	6			
68.	di-n-butyl phthalate	0.010	6	6	4	2		
69.	di-n-octyl phthalate	0.010	6	6	5	1		
70.	diethyl phthalate	0.010	6	6	5	1		
71.	dimethyl phthalate	0.010	6	6	5	1		
72.	benzo(a)anthracene	0.010	6	6	6			
73.	benzo(a)pyrene	0.010	6	6	6			
74.	benzo(b)fluoranthene	0.010	6	6	6			
75.	benzo(k)fluoranthene	0.010	6	6	6			
76.	chrysene	0.010	6	6	6			
77.	acenaphthylene	0.010	6	6	6			
78.	anthracene (a)	0.010	6	6	6			

Table V-49 (Continued)

FREQUENCY OF OCCURRENCE OF TOXIC POLLUTANTS
CLEANING OR ETCHING BATH
RAW WASTEWATER

	Pollutant	Analytical Quantification Level (mg/l)	Number of Streams Analyzed	Number of Samples Analyzed	Number of Times Observed in Samples (mg/l) ND-0.010	0.011-0.100	0.101-1.000	1.000+
79.	benzo(ghi)perylene	0.010	6	6	6			
80.	fluorene	0.010	6	6	6			
81.	phenanthrene (a)	0.010	-	-	6			
82.	dibenzo(a,h)anthracene	0.010	6	6	6			
83.	indeno (1,2,3-c,d)pyrene	0.010	6	6	6			
84.	pyrene	0.010	6	6	6			
85.	tetrachloroethylene	0.010	4	4	4			
86.	toluene	0.010	4	4	4			
87.	trichloroethylene	0.010	4	4	4			
88.	vinyl chloride (chloroethylene)	0.010	4	4	4			
89.	aldrin	0.005	6	6	6			
90.	dieldrin	0.005	6	6	6			
91.	chlordane	0.005	6	6	6			
92.	4,4'-DDT	0.005	6	6	6			
93.	4,4'-DDE	0.005	6	6	6			
94.	4,4'-DDD	0.005	6	6	6			
95.	alpha-endosulfan	0.005	6	6	6			
96.	beta-endosulfan	0.005	6	6	6			
97.	endosulfan sulfate	0.005	6	6	6			
98.	endrin	0.005	6	6	6			
99.	endrin aldehyde	0.005	6	6	6			
100.	heptachlor	0.005	6	6	6			
101.	heptachlor epoxide	0.005	6	6	6			
102.	alpha-BHC	0.005	6	6	6			
103.	beta-BHC	0.005	6	6	6			
104.	gamma-BHC	0.005	6	6	6			
105.	delta-BHC	0.005	6	6	6			
106.	PCB-1242 (b)	0.005	6	6	6			
107.	PCB-1254 (b)	0.005	-	-				
108.	PCB-1221 (b)	0.005	-	-				
109.	PCB-1232 (b)	0.005	-	-				
110.	PCB-1248 (c)	0.005	6	6	6			
111.	PCB-1260 (c)	0.005	-	-				
112.	PCB-1016 (c)	0.005	-	-				
113.	toxaphene	0.005	6	6	6			
114.	antimony	0.100	4	4	4			
115.	arsenic	0.010	4	4	3		1	
116.	asbestos	10 MFL	0	0				

Table V-49 (Continued)

FREQUENCY OF OCCURRENCE OF TOXIC POLLUTANTS
CLEANING OR ETCHING BATH
RAW WASTEWATER

Pollutant	Analytical Quantification Level (mg/l)	Number of Streams Analyzed	Number of Samples Analyzed	Number of Times Observed in Samples (mg/l) ND-0.010	0.011-0.100	0.101-1.000	1.000+
117. beryllium	0.010	3	3	3			
118. cadmium	0.002	3	3	1	1		1
119. chromium (total)	0.005	3	3		1	1	1
120. copper	0.009	3	3	1			2
121. cyanide (total)	0.100	6	6	2	2	2	
122. lead	0.020	3	3			1	2
123. mercury	0.0001	3	3	2	1		
124. nickel	0.005	3	3	1	1	1	
125. selenium	0.01	6	6	6			
126. silver	0.02	4	4	4			
127. thallium	0.100	4	4	4			
128. zinc	0.050	3	3	1		2	
129. 2,3,7,8-tetrachlorodibenzo-p-dioxin	0.005	0	0				

(a), (b), (c) Reported together.

Table V-50

SAMPLING DATA
CLEANING OR ETCHING BATH
RAW WASTEWATER

Pollutant	Stream Code	Sample Type	Source	Concentrations (mg/l) Day 1	Day 2	Day 3	Average
Toxic Pollutants							
22. parachlorometa cresol	A-6	1	ND	0.021			0.021
	A-7	1	ND	ND			
	B-11	1	ND	ND			
	B-12	1	ND	*			*
	C-10	1	ND	ND			
	C-11	1	ND	ND			
23. chloroform	B-11	1	0.010	*			*
	B-12	1	0.010	*			*
	C-10	1	0.055	*			*
	C-11	1	0.055	0.020			0.020
34. 2,4-dimethylphenol	A-6	1	ND	ND			
	A-7	1	ND	ND			
	B-11	1	ND	*			*
	B-12	1	ND	*			*
	C-10	1	ND	ND			
	C-11	1	ND	0.034			0.034
39. fluoranthene	A-6	1	ND	*			*
	A-7	1	ND	ND			
	B-11	1	ND	0.002			0.002
	B-12	1	ND	0.018			0.018
	C-10	1	ND	ND			
	C-11	1	ND	ND			
44. methylene chloride	B-11	1	*	0.062			0.062
	B-12	1	*	*			*
	C-10	1	0.220	0.039			0.039
	C-11	1	0.220	0.015			0.015
59. 2,4-dinitrophenol	A-6	1	ND	2.900			2.900
	A-7	1	ND	ND			
	B-11	1	ND	0.146			0.146
	B-12	1	ND	*			*
	C-10	1	ND	ND			
	C-11	1	ND	ND			
64. pentachlorophenol	A-6	1	ND	ND			
	A-7	1	ND	ND			
	B-11	1	ND	*			*
	B-12	1	ND	0.012			0.012
	C-10	1	ND	ND			
	C-11	1	ND	ND			

Table V-50 (Continued)

SAMPLING DATA
CLEANING OR ETCHING BATH
RAW WASTEWATER

Pollutant	Stream Code	Sample Type	Source	Concentrations (mg/l) Day 1	Day 2	Day 3	Average
65. phenol	A-6	1		0.0160			0.0160
	A-7	1		0.035			0.035
	B-11	1		ND			
	B-12	1		0.0160			0.0160
	C-10	1	ND	ND			
	C-11	1	ND	ND			
66. bis(2-ethylhexyl) phthalate	A-6	1	0.200	0.033			0.033
	A-7	1	0.200	0.025			0.025
	B-11	1	*	0.009			0.009
	B-12	1	*	*			*
	C-10	1	*	0.021			0.021
	C-11	1	*	ND			
68. di-n-butyl phthalate	A-6	1	0.076	0.032			0.032
	A-7	1	0.076	0.012			0.012
	B-11	1	*	0.003			0.003
	B-12	1	*	*			*
	C-10	1	*	*			*
	C-11	1	*	ND			
69. di-n-octyl phthalate	A-6	1	ND	*			*
	A-7	1	ND	ND			
	B-11	1	ND	ND			
	B-12	1	ND	ND			
	C-10	1	ND	ND			
	C-11	1	ND	0.050			0.050
70. diethyl phthalate	A-6	1	ND	ND			
	A-7	1	ND	ND			
	B-11	1	*	*			*
	B-12	1	*	ND			
	C-10	1	*	*			*
	C-11	1	*	0.036			0.036
71. dimethyl phthalate	A-6	1	ND	ND			
	A-7	1	ND	ND			
	B-11	1	ND	ND			
	B-12	1	ND	0.013			0.013
	C-10	1	ND	ND			
	C-11	1	ND	ND			

Table V-50 (Continued)

SAMPLING DATA
CLEANING OR ETCHING BATH
RAW WASTEWATER

	Pollutant	Stream Code	Sample Type	Source	Concentrations (mg/l) Day 1	Day 2	Day 3	Average
99.	endrin aldehyde	A-6	1	ND	ND			
		A-7	1	ND	ND			
		B-11	1	ND	ND			
		B-12	1	ND	**			**
		C-10	1	**	**			**
		C-11	1	**	0.0052			0.0052
115.	arsenic	B-11	1	<0.010	0.14			0.14
		B-12	1	<0.010	<0.01			<0.01
		C-10	1	<0.020	0.01			0.01
		C-11	1	<0.020	<0.02			<0.02
116.	cadmium	B-11	1	ND	0.050			0.050
		C-10	1	<0.002	0.005			0.005
		C-11	1	<0.002	3.000			3.000
119.	chromium	B-11	1	ND	0.020			0.020
		C-10	1	0.007	0.400			0.400
		C-11	1	0.007	10.00			10.00
120.	copper	B-11	1	ND	20			20
		C-10	1	0.020	20			20
		C-11	1	0.02000	<5.00			<5.00
121.	cyanide	A-6	1	ND	0.408			0.408
		A-7	1	ND	0.082			0.082
		B-11	1	ND	0.196			0.196
		B-12	1	ND	0.003			0.003
		C-10	1	ND	0.054			0.054
		C-11	1	ND	<0.001			<0.001
122.	lead	B-11	1	ND	2.000			2.000
		C-10	1	0.030	0.400			0.400
		C-11	1	0.030	90.0			90.0
123.	mercury	B-11	1	ND	0.0004			0.0004
		C-10	1	0.0004	0.001			0.001
		C-11	1	0.0004	0.020			0.020
124.	nickel	B-11	1	ND	0.100			0.100
		C-10	1	0.030	0.500			0.500
		C-11	1	0.030	<3.000			<3.000
128.	zinc	B-11	1	ND	0.500			0.500
		C-10	1	0.200	0.900			0.900
		C-11	1	0.200	<30.00			<30.00

Table V-50 (Continued)

SAMPLING DATA
CLEANING OR ETCHING BATH
RAW WASTEWATER

Pollutant	Stream Code	Sample Type	Source	Concentrations (mg/l) Day 1	Day 2	Day 3	Average
Nonconventional							
aluminum	B-11	1		2,200			2,200
	B-12	1		2,000			2,000
	C-10	1	2	30			30
	C-11	1	2	70,000			70,000
calcium	B-11	1		18			18
	B-12	1		<0.03			<0.03
	C-10	1	12	36			36
	C-11	1	12	<2,500			<2,500
chemical oxygen demand (COD)	A-6	1	8.00	3,780			3,780
	A-7	1	8.00	207			207
	B-11	1	82.0	1			1
	B-12	1	82.0	17			17
	C-10	1	<5.000	1.0			1.0
	C-11	1	<5.000	9,270			9,270
dissolved solids	A-6	1		83,856			83,856
	A-7	1		284,000			284,000
	B-11	1		27,619			27,619
	B-12	1		43,647			43,647
	C-10	1		27,620			27,620
magnesium	B-11	1		980			980
	B-12	1		0.06			0.06
	C-10	1	4.6	5.9			5.9
	C-11	1	4.6	<50			<50
phenols (total; by 4-AAP method)	A-6	1		0.039			0.039
	A-7	1		0.174			0.174
	B-11	1		0.005			0.005
	B-12	1		0.040			0.040
	C-10	1		<0.001			<0.001
	C-11	1		0.197			0.197
sulfate	A-6	1		213.0			213.0
	A-7	1		<10.0			<10.0
	B-11	1		10			10
	B-12	1		200			200

Table V-50 (Continued)

SAMPLING DATA
CLEANING OR ETCHING BATH
RAW WASTEWATER

Pollutant	Stream Code	Sample Type	Source	Concentrations (mg/l) Day 1	Day 2	Day 3	Average
total organic carbon (TOC)	A-6	1	9.000	755			755
	B-11	1	35.00	<1.000			<1.000
	B-12	1	35.00	60			60
	C-10	1	<1.000	1.000			1.000
	C-11	1	<1.000	3,550			3,550
Conventional							
oil and grease	A-6	1		100			100
	A-7	1		7			7
	B-11	1		12			12
	B-12	1		12			12
	C-10	1		11			11
	C-11	1		11			11
suspended solids	A-6	1	<1.000	166			166
	A-7	1	<1.000	279			279
	B-11	1	138	27			27
	B-12	1	138	73			73
	C-10	1	<1.00	9			9
	C-11	1	<1.00	348			348
pH (standard units)	B-11	1		0.5			
	B-12	1		11.4			

Table V-51

CLEANING OR ETCHING RINSE

Plant	Water Use l/kkg	Water Use gal/ton	Percent Recycle	Wastewater l/kkg	Wastewater gal/ton
1	21,180	5,080	*	1.430	0.3430
2	15,800	3,790	*	2.635	0.6320
3	*	*	*	14.48	3.472
4	*	*	*	61.00	14.63
5	8,339	2,000	*	80.05	19.20
6	102.1	24.49	0	102.1	24.49
7	*	*	*	178.0	42.70
8	400.3	96.00	0	333.6	80.00
9	500.3	120.0	0	500.3	120.0
10	5,003	1,200	*	500.3	120.0
11	9,727	2,333	94.3	558.3	133.3
12	141,600	33,970	99.6	600.0	143.9
13	1,063	255.0	0	938.1	225.0
14	3,490	837.0	*	1,163	279.0
15	1,313	315.0	0	1,313	315.0
16	2,377	570.0	*	1,591	381.6
17	1,780	427.0	0	1,780	427.0
18	2,224	533.3	*	2,110	506.0
19	*	*	*	2,330	558.8
20	50,030	12,000	90.0	5,003	1,200
21	5,212	1,250	0	5,212	1,250
22	*	*	*	5,683	1,363
23	10,670	2,560	0	10,670	2,560
24	*	*	*	14,480	3,473
25	16,120	3,865	0	16,120	3,865
26	41,690	10,000	50.0	20,850	5,000
27	*	*	*	23,350	5,600
28	23,520	5,640	0	23,520	5,640
29	*	*	*	36,390	8,727
30	*	*	*	43,950	10,540
31	*	*	*	63,920	15,330
32	75,430	18,090	0	75,430	18,090
33	89,350	21,430	0	89,350	21,430
34	250,200	60,000	0	125,100	30,000

*Data not available.

Statistical Summary

Minimum	102.1	24.49	1.430	0.3430
Maximum	250,000	60,000	125,100	30,000
Mean	32,380	7,766	16,860	4,043
Median	9,033	2,167	1,945	467.0
Sample:	24 of 30 plants		34 of 30 plants	

Note: This table includes data from four plants which have both cleaning and etch line rinse discharges.

Table V-52

FREQUENCY OF OCCURRENCE OF TOXIC POLLUTANTS
CLEANING OR ETCHING RINSE
RAW WASTEWATER

	Pollutant	Analytical Quantification Level (mg/l)	Number of Streams Analyzed	Number of Samples Analyzed	Number of Times Observed in Samples (mg/l)			
					ND-0.010	0.011-0.100	0.101-1.000	1.000+
1.	acenaphthene	0.010	20	36	35	1		
2.	acrolein	0.010	20	42	42			
3.	acrylonitrile	0.010	20	42	42			
4.	benzene	0.010	20	42	36	6		
5.	benzidine	0.010	20	36	36			
6.	carbon tetrachloride	0.010	20	42	42			
7.	chlorobenzene	0.010	20	42	42			
8.	1,2,4-trichlorobenzene	0.010	20	36	36			
9.	hexachlorobenzene	0.010	20	36	36			
10.	1,2-dichloroethane	0.010	20	42	42			
11.	1,1,1-trichloroethane	0.010	20	42	42			
12.	hexachloroethane	0.010	20	36	36			
13.	1,1-dichloroethane	0.010	20	42	42			
14.	1,1,2-trichloroethane	0.010	20	42	42			
15.	1,1,2,2-tetrachloroethane	0.010	20	42	42			
16.	chloroethane	0.010	20	42	42			
17.	bis(chloromethyl)ether	0.010	20	42	42			
18.	bis(chloroethyl)ether	0.010	20	36	36			
19.	2-chloroethyl vinyl ether	0.010	20	42	42			
20.	2-chloronaphthalene	0.010	20	36	36			
21.	2,4,6-trichlorophenol	0.010	20	36	36			
22.	p-chloro-m-cresol	0.010	20	36	36			
23.	chloroform	0.010	20	42	18	23	1	
24.	2-chlorophenol	0.010	20	36	36			
25.	1,2-dichlorobenzene	0.010	20	36	36			
26.	1,3-dichlorobenzene	0.010	20	36	36			
27.	1,4-dichlorobenzene	0.010	20	36	36			
28.	3,3'-dichlorobenzidine	0.010	20	36	36			
29.	1,1-dichloroethylene	0.010	20	42	42			
30.	1,2-trans-dichloroethylene	0.010	20	42	41		1	
31.	2,4-dichlorophenol	0.010	20	36	36			
32.	1,2-dichloropropane	0.010	20	42	42			
33.	1,3-dichloropropene	0.010	20	42	42			
34.	2,4-dimethylphenol	0.010	20	36	35	1		
35.	2,4-dinitrotoluene	0.010	20	36	36			
36.	2,6-dinitrotoluene	0.010	20	36	36			
37.	1,2-diphenylhydrazine	0.010	20	36	36			
38.	ethylbenzene	0.010	20	42	42			
39.	fluoranthene	0.010	20	36	36			

Table V-52 (Continued)

FREQUENCY OF OCCURRENCE OF TOXIC POLLUTANTS
CLEANING OR ETCHING RINSE
RAW WASTEWATER

	Pollutant	Analytical Quantification Level (mg/l)	Number of Streams Analyzed	Number of Samples Analyzed	Number of Times Observed in Samples (mg/l) ND-0.010	0.011-0.100	0.101-1.000	1.000+
40.	4-chlorophenyl phenyl ether	0.010	20	36	36			
41.	4-bromophenyl phenyl ether	0.010	20	36	36			
42.	bis(2-chloroisopropyl)ether	0.010	20	36	36			
43.	bis(2-chloroethoxy)methane	0.010	20	36	36			
44.	methylene chloride	0.010	20	42	20	8	11	3
45.	methyl chloride (chloromethane)	0.010	20	42	42			
46.	methyl bromide (bromomethane)	0.010	20	42	42			
47.	bromoform (tribromomethane)	0.010	20	42	42			
48.	dichlorobromomethane	0.010	20	42	42			
49.	trichlorofluoromethane	0.010	20	42	42			
50.	dichlorodifluoromethane	0.010	20	42	42			
51.	chlorodibromomethane	0.010	20	42	40	2		
52.	hexachlorobutadiene	0.010	20	36	36			
53.	hexachlorocyclopentadiene	0.010	20	36	36			
54.	isophorone	0.010	20	36	35		1	
55.	naphthalene	0.010	20	36	35	1		
56.	nitrobenzene	0.010	20	36	36			
57.	2-nitrophenol	0.010	20	36	36			
58.	4-nitrophenol	0.010	20	36	36			
59.	2,4-dinitrophenol	0.010	20	36	36			
60.	4,6-dinitro-o-cresol	0.010	20	36	36			
61.	N-nitrosodimethylamine	0.010	20	36	36			
62.	N-nitrosodiphenylamine	0.010	20	36	36			
63.	N-nitrosodi-n-propylamine	0.010	20	36	36			
64.	pentachlorophenol	0.010	20	36	36			
65.	phenol	0.010	20	36	34	2		
66.	bis (2-ethylhexyl) phthalate	0.010	20	36	28	8		
67.	butyl benzyl phthalate	0.010	20	36	35	1		
68.	di-n-butyl phthalate	0.010	20	36	34	2		
69.	di-n-octyl phthalate	0.010	20	36	34	2		
70.	diethyl phthalate	0.010	20	36	33	3		
71.	dimethyl phthalate	0.010	20	36	36			
72.	benzo(a)anthracene	0.010	20	36	36			
73.	benzo(a)pyrene	0.010	20	36	36			
74.	benzo(b)fluoranthene	0.010	20	36	36			
75.	benzo(k)fluoranthene	0.010	20	36	36			
76.	chrysene	0.010	20	36	36			
77.	acenaphthylene	0.010	20	36	36			
78.	anthracene (a)	0.010	20	36	36			

Table V-52 (Continued)

FREQUENCY OF OCCURRENCE OF TOXIC POLLUTANTS
CLEANING OR ETCHING RINSE
RAW WASTEWATER

	Pollutant	Analytical Quantification Level (mg/l)	Number of Streams Analyzed	Number of Samples Analyzed	Number of Times Observed in Samples (mg/l) ND-0.010	0.011-0.100	0.101-1.000	1.000+
79.	benzo(ghi)perylene	0.010	20	36	36			
80.	fluorene	0.010	20	36	36			
81.	phenanthrene (a)	0.010	-	-				
82.	dibenzo(a,h)anthracene	0.010	20	36	36			
83.	indeno (1,2,3-c,d)pyrene	0.010	20	36	36			
84.	pyrene	0.010	20	36	36			
85.	tetrachloroethylene	0.010	20	42	42			
86.	toluene	0.010	20	42	42			
87.	trichloroethylene	0.010	20	42	42			
88.	vinyl chloride (chloroethylene)	0.010	20	42	42			
89.	aldrin	0.005	19	27	27			
90.	dieldrin	0.005	19	27	27			
91.	chlordane	0.005	19	27	27			
92.	4,4'-DDT	0.005	19	27	27			
93.	4,4'-DDE	0.005	19	27	27			
94.	4,4'-DDD	0.005	19	27	27			
95.	alpha-endosulfan	0.005	19	27	27			
96.	beta-endosulfan	0.005	19	27	27			
97.	endosulfan sulfate	0.005	19	27	27			
98.	endrin	0.005	19	27	27			
99.	endrin aldehyde	0.005	19	27	27			
100.	heptachlor	0.005	19	27	27			
101.	heptachlor epoxide	0.005	19	27	27			
102.	alpha-BHC	0.005	19	27	27			
103.	beta-BHC	0.005	19	27	27			
104.	gamma-BHC	0.005	19	27	27			
105.	delta-BHC	0.005	19	27	27			
106.	PCB-1242 (b)	0.005	19	27	26	1		
107.	PCB-1254 (b)	0.005	-	-				
108.	PCB-1221 (b)	0.005	-	-				
109.	PCB-1232 (b)	0.005	-	-				
110.	PCB-1248 (c)	0.005	19	27	26	1		
111.	PCB-1260 (c)	0.005	-	-				
112.	PCB-1016 (c)	0.005	-	-				
113.	toxaphene	0.005	19	27	27			
114.	antimony	0.100	9	12	12			
115.	arsenic	0.010	18	33	22	8	3	
116.	asbestos	10 MFL	0	0				

Table V-52 (Continued)

FREQUENCY OF OCCURRENCE OF TOXIC POLLUTANTS
CLEANING OR ETCHING RINSE
RAW WASTEWATER

Pollutant	Analytical Quantification Level (mg/l)	Number of Streams Analyzed	Number of Samples Analyzed	Number of Times Observed in Samples (mg/l)			
				ND-0.010	0.011-0.100	0.101-1.000	1.000+
117. beryllium	0.010	17	31	30		1	
118. cadmium	0.002	17	31	25	5	1	
119. chromium (total)	0.005	17	31	5	7	6	13
120. copper	0.009	17	31	2	5	14	10
121. cyanide (total)	0.100	19	35	31	4		
122. lead	0.020	17	31	9	9	6	7
123. mercury	0.0001	17	31	30	1		
124. nickel	0.005	17	31	22	5	3	1
125. selenium	0.01	9	12	12			
126. silver	0.02	9	12	12			
127. thallium	0.100	9	12	12			
128. zinc	0.050	17	31	2	9	7	13
129. 2,3,7,8-tetrachlorodibenzo-p-dioxin	0.005	0	0				

(a), (b), (c) Reported together.

Table V-53

SAMPLING DATA
CLEANING OR ETCHING RINSE
RAW WASTEWATER

Pollutant	Stream Code	Sample Type	Source	Concentrations (mg/l) Day 1	Day 2	Day 3	Average
Toxic Pollutants							
1. acenaphthene	A-3	1	ND	*			*
	A-4	1	ND	*			*
	B-5	1	ND	ND			
	C-6	1	ND	ND			
	C-7	1	ND	ND			
	D-3	6	ND	*			*
	D-5	6	ND	0.017			0.017
	E-5	3	*	ND	ND	ND	
	H-4	1	*	ND			
	H-5	1	*	ND	ND		
	H-6	1	*	ND	ND		
	K-2	1	ND	ND	ND	ND	
	K-3	1	ND	ND	ND	ND	
	L-5	7		ND			
	L-6	3	ND	ND	ND	ND	
	N-6	6	ND	ND			
	N-8	1	ND	ND			
	Q-2	3	ND	ND	ND	ND	
	R-6	3	ND	ND	ND	ND	
	R-7	3	ND	ND	ND	ND	
4. benzene	A-3	1	*	ND			
	A-4	1	*	*			*
	B-5	1	ND	ND			
	C-6	1	ND	ND			
	C-7	1	ND	ND			
	D-3	1	ND	ND	ND	*	*
	D-5	1	ND	ND	ND	*	*
	E-5	1	ND	ND	0.043	ND	0.043
	H-4	1	0.023	*			*
	H-5	1	0.023	*	0.031		0.016
	H-6	1	0.023	0.033	ND		0.033
	K-2	1	0.029	ND	*	ND	*
	K-3	1	0.029	0.042	0.042	0.019	0.034
	L-5	1	ND	ND			
	L-6	1	ND	ND	ND	ND	
	N-6	1	ND	ND	ND	ND	
	N-8	1	ND	ND			
	Q-2	1	ND	ND	ND	ND	
	R-6	1	ND	ND	ND	ND	
	R-7	1	ND	ND	ND	ND	

Table V-53 (Continued)

SAMPLING DATA
CLEANING OR ETCHING RINSE
RAW WASTEWATER

Pollutant	Stream Code	Sample Type	Source	Concentrations (mg/l) Day 1	Day 2	Day 3	Average
23. chloroform	A-3	1	0.052	0.024			0.024
	A-4	1	0.052	0.019			0.019
	B-5	1	*	*			*
	C-6	1	0.055	*			*
	C-7	1	0.055	*			*
	D-3	1	0.020	*	0.011	*	0.004
	D-5	1	0.020	*	0.011	0.017	0.009
	E-5	1	*	0.069	0.110	*	0.060
	H-4	1	0.066	0.029			0.029
	H-5	1	0.066	0.071	0.057		0.064
	H-6	1	0.066	0.044	0.030		0.037
	K-2	1	0.045	*	*	*	*
	K-3	1	0.045	0.057	0.067	0.100	0.075
	L-5	1	0.100	ND			
	L-6	1	0.100	0.025	0.030	0.020	0.025
	N-6	1	0.040	*	*	*	*
	N-8	1	0.040	ND			
	Q-2	1	ND	ND	ND	*	*
	R-6	1	0.040	0.020	0.030	0.030	0.027
	R-7	1	0.040	0.020	0.020	0.020	0.020
30. 1,2-trans-di-chloroethylene	A-3	1	ND	ND			
	A-4	1	ND	ND			
	B-5	1	ND	ND			
	C-6	1	ND	ND			
	C-7	1	ND	ND			
	D-3	1	ND	ND	ND	ND	
	D-5	1	ND	ND	ND	*	*
	E-5	1	ND	ND	ND	ND	
	H-4	1	*	0.110			0.110
	H-5	1	*	ND	ND		
	H-6	1	*	*	ND		*
	K-2	1	ND	ND	ND	ND	
	K-3	1	ND	ND	ND	ND	
	L-5	1	ND	ND			
	L-6	1	ND	ND	ND	ND	
	N-6	1	ND	ND	ND	ND	
	N-8	1	ND	ND			
	Q-2	1	ND	ND	ND	ND	
	R-6	1	ND	ND	ND	ND	
	R-7	1	ND	ND	ND	ND	

Table V-53 (Continued)

SAMPLING DATA
CLEANING OR ETCHING RINSE
RAW WASTEWATER

Pollutant	Stream Code	Sample Type	Source	Concentrations (mg/l) Day 1	Day 2	Day 3	Average
34. 2,4-dimethylphenol	A-3	1	ND	ND			
	A-4	1	ND	ND			
	B-5	1	ND	ND			
	C-6	1	ND	ND			
	C-7	1	ND	ND			
	D-3	6	*	ND			
	D-5	6	*	ND			
	E-5	3	0.013	ND	ND	ND	
	H-4	1	ND	0.019			0.019
	H-5	1	ND	ND	ND		
	H-6	1	ND	ND	ND		
	K-2	1	ND	ND	ND	ND	
	K-3	1	ND	ND	ND	ND	
	L-5	7	ND	ND			
	L-6	3	ND	ND	ND	ND	
	N-6	6	ND	ND			
	N-8	1	ND	ND			
	Q-2	3	ND	ND	ND	ND	
	R-6	3	ND	ND	ND	ND	
	R-7	3	ND	ND	ND	ND	
44. methylene chloride	A-3	1	0.130	0.150			0.150
	A-4		0.130	0.510			0.510
	B-5	1	*	0.020			0.020
	C-6	1	0.220	0.018			0.018
	C-7	1	0.220	*			*
	D-3	1	*	*	ND	0.520	0.260
	D-5	1	*	*	0.058	0.280	0.113
	E-5	1	0.017	0.150	6.100	0.120	2.123
	H-4	1	1.100	0.120			0.120
	H-5	1	1.100	0.318	1.300		0.809
	H-6	1	1.100	0.873	0.017		0.445
	K-2	1	1.300	0.040	0.034	0.038	0.037
	K-3	1	1.300	0.940	0.840	2.200	1.327
	L-5	1	ND	0.030			0.030
	L-6	1	ND	*	ND	ND	*
	N-6	1	ND	ND	*	ND	*
	N-8	1	ND	ND			
	Q-2	1	*	*	*	*	*
	R-6	1	*	*	*	*	*
	R-7	1	*	*	*	*	*

Table V-53 (Continued)

SAMPLING DATA
CLEANING OR ETCHING RINSE
RAW WASTEWATER

Pollutant	Stream Code	Sample Type	Source	Concentrations (mg/l) Day 1	Day 2	Day 3	Average
51. chlorodibromomethane	A-3	1	*	*			*
	A-4	1	*	*			*
	B-5	1	ND	ND			
	C-6	1	ND	ND			
	C-7	1	ND	ND			
	D-3	1	ND	*	ND	ND	*
	D-5	1	ND	ND	ND	ND	
	E-5	1	ND	ND	ND	ND	
	H-4	1	ND	ND			
	H-5	1	ND	*	ND		*
	H-6	1	ND	ND	ND		
	K-2	1	ND	ND	ND	ND	
	K-3	1	ND	ND	ND	ND	
	L-5	1	*	ND			
	L-6	1	*	ND	*	ND	*
	N-6	1	ND	ND	ND	ND	
	N-8	1	ND	ND			
	Q-2	1	ND	ND	ND	ND	
	R-6	1	0.020	ND	ND	ND	
	R-7	1	0.020	*	0.020	0.020	0.013
54. isophorone	A-3	1	ND	ND			
	A-4	1	ND	ND			
	B-5	1	ND	ND			
	C-6	1	ND	ND			
	C-7	1	ND	ND			
	D-3	6	ND	ND			
	D-5	6	ND	0.160			0.160
	E-5	3	ND	ND	ND	*	*
	H-4	1	0.011	ND			
	H-5	1	0.011	ND	ND		
	H-6	1	0.011	ND	ND		
	K-2	1	ND	ND	ND	ND	
	K-3	1	ND	ND	ND	ND	
	L-5	7		ND			
	L-6	3	ND	ND	ND	ND	
	N-6	6	ND	ND			
	N-8	1	ND	ND			
	Q-2	3	ND	ND	ND	ND	
	R-6	3	ND	ND	ND	ND	
	R-7	3	ND	ND	ND	ND	

Table V-53 (Continued)

SAMPLING DATA
CLEANING OR ETCHING RINSE
RAW WASTEWATER

Pollutant	Stream Code	Sample Type	Source	Concentrations (mg/l) Day 1	Day 2	Day 3	Average
55. naphthalene	A-3	1	ND	ND			
	A-4	1	ND	ND			
	B-5	1	ND	ND			
	C-6	1	ND	ND			
	C-7	1	ND	ND			
	D-3	6	ND	ND			
	D-5	6	ND	ND			
	E-5	3	ND	ND	*	*	*
	H-4	1	*	ND			
	H-5	1	*	ND	ND		
	H-6	1	*	ND	ND		
	K-2	1	ND	ND	ND	ND	
	K-3	1	ND	ND	ND	ND	
	L-5	7		0.050			0.050
	L-6	3	ND	ND	ND	ND	
	N-6	6	ND	ND			
	N-8	1	ND	ND			
	Q-2	3	ND	ND	ND	ND	
	R-6	3	ND	ND	ND	ND	
	R-7	3	ND	ND	ND	ND	
65. phenol	A-3	1	*	ND			
	A-4	1	*	*			
	B-5	1	*	ND			
	C-6	1	ND	0.012			0.012
	C-7	1	ND	ND			
	D-3	6	ND	*			*
	D-5	6	ND	ND			
	E-5	3	*	ND	*	ND	*
	H-4	1	ND	0.063			0.063
	H-5	1	ND	ND	ND		
	H-6	1	ND	ND	ND		
	K-2	1	ND	ND	ND	ND	
	K-3	1	ND	*	ND	ND	*
	L-5	7	ND	**			**
	L-6	3	ND	**	**	ND	**
	N-6	6	ND	ND			
	N-8	1	ND	ND			
	Q-2	3	ND	*	*	ND	*
	R-6	3	ND	*	ND	ND	*
	R-7	3	ND	ND	ND	ND	

Table V-53 (Continued)

SAMPLING DATA
CLEANING OR ETCHING RINSE
RAW WASTEWATER

Pollutant	Stream Code	Sample Type	Source	Concentrations (mg/l) Day 1	Day 2	Day 3	Average
66. bis(2-ethylhexyl) phthalate	A-3	1	0.200	*			*
	A-4	1	0.200	0.041			0.041
	B-5	1	*	*			*
	C-6	1	*	*			*
	C-7	1	*	*			*
	D-3	6	*	*			*
	D-5	6	*	0.078			0.078
	E-5	3	*	0.089	0.032	0.019	0.047
	H-4	1	0.065	0.098			0.098
	H-5	1	0.065	0.020	*		0.010
	H-6	1	0.065	*	*		*
	K-2	1	ND	0.021	*	*	0.007
	K-3	1	ND	*	*	*	*
	L-5	7		ND			
	L-6	3	ND	*	*	ND	*
	N-6	6	ND	*			*
	N-8	1	ND	ND			*
	Q-2	3	*	*	*	*	*
	R-6	3	*	*	*	*	*
	R-7	3	*	ND	ND	ND	
67. butyl benzyl phthalate	A-3	1	*	ND			
	A-4	1	*	ND			
	B-5	1	*	ND			
	C-6	1	ND	ND			
	C-7	1	ND	ND			
	D-3	6	ND	ND			
	D-5	6	ND	ND			
	E-5	3	*	ND	ND	ND	
	H-4	1	ND	0.066			0.066
	H-5	1	ND	*	ND		*
	H-6	1	ND	ND	ND		
	K-2	1	ND	ND	*	*	*
	K-3	1	ND	ND	ND	*	*
	L-5	7		ND			
	L-6	3	ND	**	ND	ND	**
	N-6	6	ND	*			*
	N-8	1	ND	*			*
	Q-2	3	ND	ND	ND	ND	
	R-6	3	ND	ND	ND	ND	
	R-7	3	ND	ND	ND	ND	

Table V-53 (Continued)

SAMPLING DATA
CLEANING OR ETCHING RINSE
RAW WASTEWATER

Pollutant	Stream Code	Sample Type	Source	Concentrations (mg/l) Day 1	Day 2	Day 3	Average
68. di-n-butyl phthlate	A-3	1	0.076	*			*
	A-4	1	0.076	*			*
	B-5	1	*	*			*
	C-6	1	ND	*			*
	C-7	1	ND	ND			
	D-3	6	*	*			*
	D-5	6	*	ND			
	E-5	3	*	0.033	ND	*	0.017
	H-4	1	*	0.068			0.068
	H-5	1	*	*	*		*
	H-6	1	*	*	*		*
	K-2	1	ND	*	*	*	*
	K-3	1	ND	*	*	ND	*
	L-5	7		ND			
	L-6	3	ND	ND	ND	ND	
	N-6	6	ND	*			*
	N-8	1	ND	ND			
	Q-2	3	ND	ND	ND	ND	
	R-6	3	*	ND	ND	*	*
	R-7	3	*	ND	*	ND	*
69. di-n-octyl phthalate	A-3	1	ND	ND			
	A-4	1	ND	ND			
	B-5	1	ND	ND			
	C-6	1	ND	ND			
	C-7	1	ND	ND			
	D-3	6	ND	ND			
	D-5	6	ND	ND			
	E-5	3	ND	ND	ND	*	*
	H-4	1	ND	0.038			0.038
	H-5	1	ND	*	ND		*
	H-6	1	ND	ND	ND		
	K-2	1	ND	0.029	ND	ND	0.029
	K-3	1	ND	ND	ND	ND	
	L-5	7		ND			
	L-6	3	ND	ND	ND	ND	
	N-6	6	ND	ND			
	N-8	1	ND	ND			
	Q-2	3	ND	ND	ND	ND	
	R-6	3	ND	ND	ND	ND	
	R-7	3	ND	ND	ND	ND	

Table V-53 (Continued)

SAMPLING DATA
CLEANING OR ETCHING RINSE
RAW WASTEWATER

Pollutant	Stream Code	Sample Type	Source	Concentrations (mg/l) Day 1	Day 2	Day 3	Average
70. diethyl phthalate	A-3	1	ND	ND			
	A-4	1	ND	ND			
	B-5	1	*	ND			
	C-6	1	ND	ND			
	C-7	1	ND	ND			
	D-3	6	ND	ND			
	D-5	6	ND	*			*
	E-5	3	*	0.011	ND	*	0.006
	H-4	1	*	0.022			0.022
	H-5	1	*	ND	ND		*
	H-6	1	*	0.013	ND		0.013
	K-2	1	ND	ND	ND	*	*
	K-3	1	ND	ND	ND	*	*
	L-5	7		ND			
	L-6	3	ND	ND	ND	ND	
	N-6	6	ND	ND			
	N-8	1	ND	ND			
	Q-2	3	ND	ND	ND	ND	
	R-6	3	ND	ND	ND	ND	
	R-7	3	ND	ND	ND	ND	
106. PCB-1242 (a)	A-4	1	ND	**			**
107. PCB-1254 (a)	B-5	1	**	**			**
108. PCB-1221 (a)	C-6	1	**	ND			
	C-7	1	**	**			**
	D-3	6	**	**			**
	D-5	6	**	**			**
	E-5	3	**	**			**
	H-4	1	**	0.016			0.016
	H-5	1	**	ND			
	H-6	1	**	**			**
	K-2	1	ND	**			**
	K-3	1	ND	**			**
	L-5	7	ND	ND			
	L-6	3	ND	ND	ND	ND	
	N-6	6	ND	ND			
	N-8	1	ND	ND			
	Q-2	3	ND	ND	ND	ND	
	R-6	3	ND	ND	ND	ND	
	R-7	3	ND	ND	ND	ND	

Table V-53 (Continued)

SAMPLING DATA
CLEANING OR ETCHING RINSE
RAW WASTEWATER

Pollutant	Stream Code	Sample Type	Source	Concentrations (mg/l) Day 1	Day 2	Day 3	Average
109. PCB-1232 (b)	A-4	1	0.130	**			**
110. PCB-1248 (b)	B-5	1	0.400	**			**
111. PCB-1260 (b)	C-6	1	0.610	ND			
112. PCB-1016 (b)	C-7	1	0.610	**			**
	D-3	6	0.290	**			**
	D-5	6	0.290	**			**
	E-5	3	0.200	**			**
	H-4	1	1.100	0.020			0.020
	H-5	1	1.100	ND			
	H-6	1	**	**			**
	K-2	1	ND	**			**
	K-3	1	ND	**			**
	L-5	7	ND	ND			
	L-6	3	ND	ND	ND	ND	
	N-6	6	ND	ND			
	N-8	1	ND	ND			
	Q-2	3	ND	ND	ND	ND	
	R-6	3	ND	ND	ND	ND	
	R-7	3	ND	ND	ND	ND	
115. arsenic	A-3	1	<0.010	<0.010			<0.010
	B-5	1	<0.010	<0.010			<0.010
	C-6	1	<0.020	<0.010			<0.010
	C-7	1	<0.020	<0.010			<0.010
	D-3	6	<0.010	<0.010			<0.010
	D-5	6	<0.010	<0.010			<0.010
	E-5	3	<0.010	0.010	<0.010		<0.010
	H-5	1	<0.010	<0.010	<0.010		<0.010
	H-6	1	<0.010	<0.010	<0.010		<0.010
	K-2	1	<0.010	<0.010	<0.010	<0.010	<0.010
	K-3	1	<0.010	<0.010	<0.010	<0.010	<0.010
	L-5	7	<0.0002	0.0071			0.0071
	L-6	3	<0.0002	0.056	0.039	0.026	0.040
	N-6	6	<0.0002	0.004			0.004
	N-8	1	<0.0002	0.004			0.004
	Q-2	3	<0.0028	0.025	0.013	0.027	0.022
	R-6	3	<0.0037	0.280	0.190	0.120	0.197
	R-7	3	0.0037	0.014	0.016	0.010	0.013

Table V-53 (Continued)

SAMPLING DATA
CLEANING OR ETCHING RINSE
RAW WASTEWATER

Pollutant	Stream Code	Sample Type	Source	Concentrations (mg/l) Day 1	Day 2	Day 3	Average
117. beryllium	A-3	1	<0.001	<0.001			<0.001
	B-5	1		0.200			0.200
	C-7	1	<0.001	<0.001			<0.001
	D-3	6	<0.001	<0.001			<0.001
	E-5	3	<0.001	<0.001	<0.001		<0.001
	H-4	1	<0.001	<0.020			<0.020
	H-5	1	<0.001	<0.001	<0.001		<0.001
	H-6	1	<0.001	<0.001			<0.001
	K-2	1	<0.020	<0.020	<0.020	<0.020	<0.020
	K-3	1	<0.020	<0.020	<0.020	<0.020	<0.020
	L-5	7	<0.0005	<0.0005			<0.0005
	L-6	3	<0.0005	<0.0005	<0.0005	<0.0005	<0.0005
	N-6	6	<0.0005	<0.0005			<0.0005
	N-8	1	<0.0005	<0.0005			<0.0005
	Q-2	3	<0.0005	<0.0005	0.0025	0.0029	<0.0020
	R-6	3	<0.0017	0.0038	0.0067	0.0083	0.0063
	R-7	3	<0.0017	0.0038	<0.0005	<0.0005	<0.0016
118. cadmium	A-3	1	<0.002	<0.002			<0.002
	B-5	1		0.200			0.200
	C-7	1	<0.002	<0.002			<0.002
	D-3	6	<0.002	0.009			0.009
	E-5	3	<0.002	0.010	0.030		0.020
	H-4	1	<0.002	<0.040			<0.040
	H-5	1	<0.002	0.008	0.030		0.019
	H-6	1	<0.002	0.003			0.003
	K-2	1	<0.010	<0.010	<0.010	<0.010	<0.010
	K-3	1	<0.010	<0.010	<0.010	<0.010	<0.010
	L-5	7	<0.0005	<0.0028			<0.0028
	L-6	3	<0.0005	<0.0005	<0.0005	<0.0008	<0.0006
	N-6	6	<0.0005	<0.0005			<0.0005
	N-8	1	<0.0005	<0.0005			<0.0005
	Q-2	3	<0.0005	<0.0005	<0.0005	<0.0011	<0.0007
	R-6	3	<0.0005	0.027	0.024	0.030	0.027
	R-7	3	<0.0005	0.0035	0.002	<0.0005	<0.002

Table V-53 (Continued)

SAMPLING DATA
CLEANING OR ETCHING RINSE
RAW WASTEWATER

Pollutant	Stream Code	Sample Type	Source	Concentrations (mg/l) Day 1	Day 2	Day 3	Average
119. chromium	A-3	1	<0.005	0.007			0.007
	B-5	1		280			280
	C-7	1	0.007	0.020			0.020
	D-3	6	<0.005	0.040			0.040
	E-5	3	<0.005	0.060	0.080		0.070
	H-4	1	<0.005	<0.100			<0.100
	H-5	1	<0.005	0.050	0.200		0.125
	H-6	1	<0.005	0.200			0.200
	K-2	1	<0.030	2.3	3.2	3.7	3.1
	K-3	1	<0.030	2.7	3.0	0.190	2.0
	L-5	7	<0.001	104			104
	L-6	3	<0.001	0.009	0.008	0.024	0.014
	N-6	6	<0.001	0.007			0.007
	N-8	1	<0.001	0.013			0.013
	Q-2	3	0.004	0.340	0.310	0.390	0.347
	R-6	3	<0.001	2.6	1.7	1.7	2.0
	R-7	3	<0.001	4.6	1.9	4.7	3.7
120. copper	A-3	1	0.010	0.060			0.060
	B-5	1		480			480
	C-7	1	0.020	0.200			0.200
	D-3	6	<0.009	3.0			3.0
	E-5	3	<0.009	1.0	1.0		1.0
	H-4	1	0.010	4.0			4.0
	H-5	1	0.010	0.400	1.0		0.7
	H-6	1	0.010	5.0			5.0
	K-2	1	<0.020	0.160	0.200	0.280	0.213
	K-3	1	<0.020	0.020	0.030	0.030	0.027
	L-5	7	0.01	0.04			0.04
	L-6	3	0.01	0.2	0.27	0.23	0.2
	N-6	6	0.008	0.0011			0.0011
	N-8	1	0.008	0.009			0.009
	Q-2	3	0.026	3.5	2.7	3.4	3.2
	R-6	3	0.010	38	38	27	34
	R-7	3	0.010	0.4	0.28	0.28	0.3

Table V-53 (Continued)

SAMPLING DATA
CLEANING OR ETCHING RINSE
RAW WASTEWATER

Pollutant	Stream Code	Sample Type	Source	Concentrations (mg/l) Day 1	Day 2	Day 3	Average
121. cyanide	A-3	1		0.007			0.007
	A-4	1		0.009			0.009
	B-5	1		<0.001			<0.001
	C-6	1		<0.001			<0.001
	C-7	1		0.003			0.003
	D-3	6		0.007			0.007
	D-5	6		0.002			0.002
	E-5	3		0.033	0.021	0.042	0.032
	H-5	1		<0.001	<0.001		<0.001
	H-6	1		<0.001	0.001		<0.001
	K-2	1		0.010	0.008	0.008	0.009
	K-3	1		<0.001	0.001	0.001	<0.001
	L-5	1	ND	<0.02			<0.02
	L-6	3		<0.02	<0.02	<0.02	<0.02
	N-6	6		<0.020			<0.020
	N-8	1		<0.020			<0.020
	Q-2	1		<0.02	<0.02	<0.02	<0.02
	R-6	1		0.00028	0.00059	0.00002	0.00030
	R-7	1		<0.02	<0.02	0.03	<0.02
122. lead	A-3	1	<0.020	0.020			0.020
	B-5	1		7.0			7.0
	C-7	1	0.030	<0.020			<0.020
	D-3	6	<0.020	0.200			0.200
	E-5	3	<0.020	0.500	0.800		0.650
	H-4	1	<0.020	<0.300			<0.300
	H-5	1	<0.020	0.200	0.800		0.500
	H-6	1	<0.020	0.4			0.4
	K-2	1	<0.050	<0.050	<0.050	<0.050	<0.050
	K-3	1	<0.050	<0.050	<0.050	<0.050	<0.050
	L-5	7	0.014	0.03			0.03
	L-6	3	0.014	0.030	0.021	0.025	0.025
	N-6	6	0.010	0.020			0.020
	N-8	1	0.010	0.012			0.012
	Q-2	3	0.006	1.6	1.1	2.2	1.6
	R-6	3	<0.001	7.9	11	11	10
	R-7	3	<0.001	0.013	0.05	0.01	0.02

Table V-53 (Continued)

SAMPLING DATA
CLEANING OR ETCHING RINSE
RAW WASTEWATER

Pollutant	Stream Code	Sample Type	Source	Concentrations (mg/l) Day 1	Day 2	Day 3	Average
123. mercury	A-3	1	0.0006	0.0005			0.0005
	B-5	1		0.0006			0.0006
	C-7	1	0.0004	0.0005			0.0005
	D-3	6	0.0006	0.0008			0.0008
	E-5	3	0.0004	0.0005	0.0013		0.0009
	H-4	1	0.0004	<0.001			<0.001
	H-5	1	0.0004	0.004	0.003		0.004
	H-6	1	0.0004	0.0004			0.0004
	K-2	1	<0.0004	<0.004	<0.002	<0.002	<0.003
	K-3	1	<0.0004	<0.002	<0.002	<0.002	<0.002
	L-5	7	0.0073	0.0034			0.0034
	L-6	3	0.0073	0.0022	0.0019	0.0015	0.0019
	N-6	6	0.0091	0.0021			0.0021
	N-8	1	0.0091	0.021			0.021
	Q-2	3	<0.0001	<0.0001	<0.0001	<0.0001	<0.0001
	R-6	3	0.0007	<0.0001	<0.0001	<0.0001	<0.0001
	R-7	3	0.0007	<0.0001	<0.0001	<0.0001	<0.0001
124. nickel	A-3	1	<0.005	<0.005			<0.005
	B-5	1		160			160
	C-7	1	0.030	<0.005			<0.005
	D-3	6	<0.005	<0.005			<0.005
	E-5	3	<0.005	<0.005	<0.005		<0.005
	H-4	1	<0.005	<0.100			<0.100
	H-5	1	<0.005	<0.005	<0.005		<0.005
	H-6	1	<0.005	0.007			0.007
	K-2	1	<0.020	<0.020	<0.020	<0.020	<0.020
	K-3	1	<0.020	<0.020	0.020	<0.020	<0.020
	L-5	7	<0.001	0.025			0.025
	L-6	3	<0.001	<0.001	<0.001	0.003	<0.002
	N-6	6	<0.001	<0.001			<0.001
	N-8	1	<0.001	<0.001			<0.001
	Q-2	3	<0.001	0.011	0.005	0.016	0.011
	R-6	3	<0.001	0.42	0.3	0.23	0.3
	R-7	3	<0.001	<0.001	0.012	0.003	<0.005

Table V-53 (Continued)

SAMPLING DATA
CLEANING OR ETCHING RINSE
RAW WASTEWATER

Pollutant	Stream Code	Sample Type	Source	Concentrations (mg/l) Day 1	Day 2	Day 3	Average
128. zinc	A-3	1	0.060	0.100			0.100
	B-5	1		410			410
	C-7	1	0.200	0.070			0.070
	D-3	6	<0.050	3.0			3.0
	E-5	3	<0.050	0.5	0.5		0.5
	H-4	1	0.100	3.0			3.0
	H-5	1	0.100	0.200	0.400		0.300
	H-6	1	0.100	6.0			6.0
	K-2	1	<0.020	0.080	0.120	0.150	0.117
	K-3	1	<0.020	0.020	0.040	<0.020	<0.027
	L-5	7	0.053	0.11			0.11
	L-6	3	0.053	0.053	0.053	<0.01	<0.04
	N-6	6	<0.010	0.068			0.068
	N-8	1	<0.010	0.098			0.098
	Q-2	3	<0.010	10	6.6	10	9
	R-6	3	0.053	48	51	46	48
	R-7	3	0.053	36	6.8	3.8	16
Nonconventional							
alkalinity	A-3	1		68	86		77
	A-4	1		70	205		138
	B-5	1		6			6
	C-6	1		0			0
	C-7	1		0			0
	D-3	6		0			0
	D-5	6		530			530
	E-5	3		0	0	0	0
	H-4	1	107	3,500			3,500
	H-5	1	107	110	0		55
	H-6	1	107	40	20		30
	K-2	1	96	0	0	0	0
	K-3	1	96	40	0	0	13
	L-5	7		<10			<10
	L-6	3		<10	<10	<10	<10
	N-6	6		310			310
	N-8	1		90			90
	Q-2	3	150	60	130	130	110
	R-6	3	170	12	16	66	31
	R-7	1	170	110	160	83	118

Table V-53 (Continued)

SAMPLING DATA
CLEANING OR ETCHING RINSE
RAW WASTEWATER

Pollutant	Stream Code	Sample Type	Source	Concentrations (mg/l) Day 1	Day 2	Day 3	Average
aluminum	A-3	1	<0.09	<0.01	1.0		<0.6
	A-4	1	<0.09	110	150		130
	B-5	1		1,200			1,200
	C-6	1	2	1,200			1,200
	C-7	1	2	1.4			1.4
	D-3	6	0.2	110			110
	D-5	6	0.2	100			100
	E-5	3	<0.09	330	750	450	510
	H-4	1	<0.09	200			200
	H-5	1	<0.09	130	300		215
	H-6	1	<0.09	9.8	16		13
	K-2	1	<0.1	9.7	13	16	13
	K-3	1	<0.1	270	350	280	300
	L-5	7		56.5			56.5
	L-6	3		170	130	120	140
	N-6	6	<0.5	40			40
	N-8	1	<0.5	7.1			7.1
	Q-2	3	<0.5	94	51	100	82
	R-6	3	<0.5	1,300	64	640	668
	R-7	3	<0.5	54	56	43	51
calcium	A-3	1	39	42	31		37
	A-4	1	39	8.1	0.9		4.5
	B-5	1		0.34			0.34
	C-6	1	12	<0.03			<0.03
	C-7	1	12	31			31
	D-3	6	38	20			20
	D-5	6	38	16			16
	E-5	3	68	0.14	<0.03	0.08	<0.08
	H-4	1	52	0.6			0.6
	H-5	1	52	3.2	0.2		1.7
	H-6	1	52	56	66		61
	K-2	1	ND	38	38	38	38
	K-3	1	ND	1.4	1.5	0.7	1.2
	L-5	7		10			10
	L-6	3		11	10	9	10
	N-6	6	28	24			24
	N-8	1	28	38			38
	Q-2	3	61	48	57	62	56
	R-6	3	60	54	66	48	56
	R-7	3	60	49	60	52	54

Table V-53 (Continued)

SAMPLING DATA
CLEANING OR ETCHING RINSE
RAW WASTEWATER

Pollutant	Stream Code	Sample Type	Source	Concentrations (mg/l) Day 1	Day 2	Day 3	Average
chemical oxygen demand (COD)	A-3	1	8	5			5
	A-4	1	8	12			12
	B-5	1	<5	<5			<5
	C-6	1	<5	230			230
	C-7	1	<5	<5			<5
	D-3	6		35			35
	D-5	6		75			75
	E-5	3	<5	184	357	89	210
	H-5	1		12	28		20
	H-6	1		<5	7		<6
	K-2	1	5	8	8	10	9
	K-3	1	5	23	27	20	23
	L-5	7	<5	20			20
	L-6	3	<5	10	7	9	9
	N-6	6	5	243			243
	N-8	1	5	36			36
	Q-2	3		14	127	20	54
	R-6	3		392	251	82	242
	R-7	1		20	20	8	16
dissolved solids	A-3	1		160	162		161
	A-4	1		601	772		687
	B-5	1		20			20
	C-6	1		5,972			5,972
	C-7	1		206			206
	D-3	6		2,053			2,053
	D-5	6		760			760
	E-5	3		2,530	4,430		3,480
	H-4	1	173	18,720			18,720
	H-5	1	173	649	1,809		1,229
	H-6	1	173	505	469		487
	K-2	1	164	386	445	378	403
	K-3	1	164	1,157	1,647	210	1,005
	L-5	7		770			770
	L-6	3		160	690	550	470
	N-6	6		660			660
	N-8	1		250			250
	Q-2	3	346	650	450	580	560
	R-6	3		2,430	3,660	2,410	2,830
	R-7	1		660	560	980	730

Table V-53 (Continued)

SAMPLING DATA
CLEANING OR ETCHING RINSE
RAW WASTEWATER

Pollutant	Stream Code	Sample Type	Source	Concentrations (mg/l) Day 1	Day 2	Day 3	Average
magnesium	A-3	1		6.8	6.0		6.4
	A-4	1		0.33	2.2		1.3
	B-5	1		0.19			0.19
	C-6	1		0.09			0.09
	C-7	1		4.8			4.8
	D-3	6		17			17
	D-5	6		9.9			9.9
	E-5	3		0.4	0.02	1.0	0.4
	H-4	1		18.0			18.0
	H-5	1		0.3	<0.02		<0.2
	H-6	1		8.0	11.0		9.5
	K-2	1		9.2	9.6	10.0	9.6
	K-3	1		1.0	0.5	<0.01	<0.5
	L-5	7		3.47			3.47
	L-6	3		2.59	2.50	2.62	2.57
	N-6	6	4.39	4.87			4.87
	N-8	1	4.39	10.33			10.33
	Q-2	3		13.6	14.0	17.5	15.0
	R-6	3		38.2	34.4	39.0	37.2
	R-7	3		22.9	21.5	19.1	21.2
phenols (total; by 4-AAP method)	A-3	1		0.008	0.015		0.012
	A-4	1		0.003	0.009		0.006
	B-5	1		0.012			0.012
	C-6	1		0.039			0.039
	C-7	1		0.013			0.013
	D-3	6		0.011			0.011
	D-5	6		0.014			0.014
	E-5	1		0.009	0.031	0.012	0.017
	H-5	1		0.004	0.008		0.006
	H-6	1		<0.001	0.008		0.005
	K-2	1		0.007	0.005	<0.001	<0.004
	K-3	1		0.004	0.006	<0.001	<0.004
	L-5	1		0.003			0.003
	L-6	2		0.01	0.004	0.006	0.01
	N-6	6			0.008		0.008
	N-8	1		0.008			0.008
	Q-2	1		0.066	0.009	0.012	0.029
	R-6	1		0.012	0.004		0.008
	R-7	1		0.026	0.003	0.002	0.010

Table V-53 (Continued)

SAMPLING DATA
CLEANING OR ETCHING RINSE
RAW WASTEWATER

Pollutant	Stream Code	Sample Type	Source	Concentrations (mg/l) Day 1	Day 2	Day 3	Average
sulfate	A-3	1		30	50		40
	A-4	1		30	50		40
	B-5	1		1			1
	C-6	1		<25			<25
	C-7	1		40			40
	D-3	6		1,263			1,263
	D-5	6		70			70
	E-5	3		39	<25	50	<38
	H-4	1	<10	130			130
	H-5	1	<10	30	130		80
	H-6	1	<10	30	20		25
	K-2	1	<10	40	50	50	50
	K-3	1	<10	60	39	70	56
	L-5	7		11			11
	L-6	3		250	280	460	330
	N-6	6		40			40
	N-8	1		60			60
	Q-2	3	67	35	9	53	32
	R-6	3		150	48	17	72
	R-7	1		170	150	190	170
total organic carbon (TOC)	A-3	1	9	3			3
	A-4	1	9	7			7
	B-5	1	35	<1			<1
	C-6	1	<1	109			109
	C-7	1	<1	<1			<1
	D-3	6		5			5
	D-5	6		45			45
	E-5	3	1	51	138	21	70
	H-5	1		10	5		8
	H-6	1		<1	7		<4
	K-2	1	6	8	6	<1	<5
	K-3	1	6	8	14	7	10
	L-5	7	2.8	13			13
	L-6	3	2.8	6	7.4	2.8	5
	N-6	6	2.7	184			184
	N-8	1	2.7	16			16
	Q-2	3		1.5	1.8	0.67	1.3
	R-6	3		30	53	13	32
	R-7	1		3.7	9.2	3.3	5.4

Table V-53 (Continued)

SAMPLING DATA
CLEANING OR ETCHING RINSE
RAW WASTEWATER

Pollutant	Stream Code	Sample Type	Source	Concentrations (mg/l) Day 1	Day 2	Day 3	Average
Conventional							
oil and grease	A-3	1		4			4
	A-4	1		2			2
	C-6	1		16			16
	C-7	1		11			11
	D-3	1		5			5
	D-5	1		47			47
	E-5	1		76	22	31	43
	H-5	1		16	18		17
	H-6	1		14	13		14
	K-2	1	3	10	7	7	8
	K-3	1	3	15	6	3	8
	L-5	1		5			5
	L-6	1		53	7	5	22
	N-6	1	<5	10	<5	17	<11
	Q-2	1		<5	<5	<5	<5
	R-6	1		14	105	6	42
	R-7	1		<5	146	13	<55
suspended solids	A-3	1	<1	2			2
	A-4	1	<1	310			310
	B-5	1	138	1			1
	C-6	1	<1	90			90
	C-7	1	<1	<1			<1
	D-3	6		23			23
	D-5	6		120			120
	E-5	3	<1	200	300	170	223
	H-5	1		363	298		331
	H-6	1		49	48		49
	K-2	1	13	13	151	10	58
	K-3	1	13	249	49	1	100
	L-5	7	<2	<2			<2
	L-6	3	<2	622	512	494	543
	N-6	6	<2	52			52
	N-8	1	<2	19			19
	Q-2	3		352	188	360	300
	R-6	3		3,640	2,140	2,230	2,670
	R-7	1		250	230	160	210

Table V-53 (Continued)

SAMPLING DATA
CLEANING OR ETCHING RINSE
RAW WASTEWATER

Pollutant	Stream Code	Sample Type	Source	Concentrations (mg/l) Day 1	Day 2	Day 3	Average
pH (standard units)	A-3	1		8			8
	A-4	1		6			6
	B-5	1		6.9			6.9
	C-6	1		11.8			11.8
	C-7	1		2.2			2.2
	D-3	1		3.5	4	3.3	4
	D-5	1		11.2	10.8	11.2	11.1
	E-5	1		9.8	11.6	10.5	10.6
	K-2	1		2.5	2.5	2.2	2.4
	K-3	1		11.3	11.7	10.8	11.3
	L-5	1		2.5			2.5
	L-6	1		3.6	2.1	2.0	2.6
	N-6	1	7.1	9.4	9.1	9.4	9.3
	N-8	1	7.1	8.1			8.1
	Q-2	1		5.7	8.9		7.3
	R-6	1		9.2	7.7	7.3	8.1
	R-7	1		6.3			6.3

(a), (b) Reported together

Table V-54

CLEANING OR ETCHING SCRUBBER LIQUOR

Plant	Water Use l/kkg	Water Use gal/ton	Percent Recycle	Wastewater l/kkg	Wastewater gal/ton
1	*	*	*	1,880	451.0
2	*	*	*	1,985	476.0
3	47,780	11,460	0	47,780	11,460
4	*	*	*	*	*
5	*	*	*	*	*
6	*	*	*	*	*

*Data not available.

Statistical Summary

Minimum	1,880	451.0
Maximum	47,780	11,460
Mean	17,220	4,129
Median	1,985	476.0
Sample:	3 of 6 plants	

Table V-55

FREQUENCY OF OCCURRENCE OF TOXIC POLLUTANTS
CLEANING OR ETCHING SCRUBBER LIQUOR
RAW WASTEWATER

	Pollutant	Analytical Quantification Level (mg/l)	Number of Streams Analyzed	Number of Samples Analyzed	Number of Times Observed in Samples (mg/l) ND-0.010	0.011-0.100	0.101-1.000	1.000+
1.	acenaphthene	0.010	1	1	1			
2.	acrolein	0.010	1	1	1			
3.	acrylonitrile	0.010	1	1	1			
4.	benzene	0.010	1	1	1			
5.	benzidine	0.010	1	1	1			
6.	carbon tetrachloride	0.010	1	1	1			
7.	chlorobenzene	0.010	1	1	1			
8.	1,2,4-trichlorobenzene	0.010	1	1	1			
9.	hexachlorobenzene	0.010	1	1	1			
10.	1,2-dichloroethane	0.010	1	1	1			
11.	1,1,1-trichloroethane	0.010	1	1	1			
12.	hexachloroethane	0.010	1	1	1			
13.	1,1-dichloroethane	0.010	1	1	1			
14.	1,1,2-trichloroethane	0.010	1	1	1			
15.	1,1,2,2-tetrachloroethane	0.010	1	1	1			
16.	chloroethane	0.010	1	1	1			
17.	bis(chloromethyl)ether	0.010	1	1	1			
18.	bis(chloroethyl)ether	0.010	1	1	1			
19.	2-chloroethyl vinyl ether	0.010	1	1	1			
20.	2-chloronaphthalene	0.010	1	1	1			
21.	2,4,6-trichlorophenol	0.010	1	1	1			
22.	p-chloro-m-cresol	0.010	1	1	1			
23.	chloroform	0.010	1	1	1			
24.	2-chlorophenol	0.010	1	1	1			
25.	1,2-dichlorobenzene	0.010	1	1	1			
26.	1,3-dichlorobenzene	0.010	1	1	1			
27.	1,4-dichlorobenzene	0.010	1	1	1			
28.	3,3'-dichlorobenzidine	0.010	1	1	1			
29.	1,1-dichloroethylene	0.010	1	1	1			
30.	1,2-trans-dichloroethylene	0.010	1	1	1			
31.	2,4-dichlorophenol	0.010	1	1	1			
32.	1,2-dichloropropane	0.010	1	1	1			
33.	1,3-dichloropropene	0.010	1	1	1			
34.	2,4-dimethylphenol	0.010	1	1	1			
35.	2,4-dinitrotoluene	0.010	1	1	1			
36.	2,6-dinitrotoluene	0.010	1	1	1			
37.	1,2-diphenylhydrazine	0.010	1	1	1			
38.	ethylbenzene	0.010	1	1	1			
39.	fluoranthene	0.010	1	1	1			

Table V-55 (Continued)

FREQUENCY OF OCCURRENCE OF TOXIC POLLUTANTS
CLEANING OR ETCHING SCRUBBER LIQUOR
RAW WASTEWATER

	Pollutant	Analytical Quantification Level (mg/l)	Number of Streams Analyzed	Number of Samples Analyzed	Number of Times Observed in Samples (mg/l) ND-0.010	0.011-0.100	0.101-1.000	1.000+
40.	4-chlorophenyl phenyl ether	0.010	1	1	1			
41.	4-bromophenyl phenyl ether	0.010	1	1	1			
42.	bis(2-chloroisopropyl)ether	0.010	1	1	1			
43.	bis(2-chloroethoxy)methane	0.010	1	1	1			
44.	methylene chloride	0.010	1	1		1		
45.	methyl chloride (chloromethane)	0.010	1	1	1			
46.	methyl bromide (bromomethane)	0.010	1	1	1			
47.	bromoform (tribromomethane)	0.010	1	1	1			
48.	dichlorobromomethane	0.010	1	1	1			
49.	trichlorofluoromethane	0.010	1	1	1			
50.	dichlorodifluoromethane	0.010	1	1	1			
51.	chlorodibromomethane	0.010	1	1	1			
52.	hexachlorobutadiene	0.010	1	1	1			
53.	hexachlorocyclopentadiene	0.010	1	1	1			
54.	isophorone	0.010	1	1	1			
55.	naphthalene	0.010	1	1	1			
56.	nitrobenzene	0.010	1	1	1			
57.	2-nitrophenol	0.010	1	1	1			
58.	4-nitrophenol	0.010	1	1	1			
59.	2,4-dinitrophenol	0.010	1	1	1			
60.	4,6-dinitro-o-cresol	0.010	1	1	1			
61.	N-nitrosodimethylamine	0.010	1	1	1			
62.	N-nitrosodiphenylamine	0.010	1	1	1			
63.	N-nitrosodi-n-propylamine	0.010	1	1	1			
64.	pentachlorophenol	0.010	1	1	1			
65.	phenol	0.010	1	1	1			
66.	bis (2-ethylhexyl) phthalate	0.010	1	1	1			
67.	butyl benzyl phthalate	0.010	1	1	1			
68.	di-n-butyl phthalate	0.010	1	1	1			
69.	di-n-octyl phthalate	0.010	1	1	1			
70.	diethyl phthalate	0.010	1	1	1			
71.	dimethyl phthalate	0.010	1	1	1			
72.	benzo(a)anthracene	0.010	1	1	1			
73.	benzo(a)pyrene	0.010	1	1	1			
74.	benzo(b)fluoranthene	0.010	1	1	1			
75.	benzo(k)fluoranthene	0.010	1	1	1			
76.	chrysene	0.010	1	1	1			
77.	acenaphthylene	0.010	1	1	1			
78.	anthracene (a)	0.010	1	1	1			

Table V-55 (Continued)

FREQUENCY OF OCCURRENCE OF TOXIC POLLUTANTS
CLEANING OR ETCHING SCRUBBER LIQUOR
RAW WASTEWATER

	Pollutant	Analytical Quantification Level (mg/l)	Number of Streams Analyzed	Number of Samples Analyzed	Number of Times Observed in Samples (mg/l) ND-0.010	0.011-0.100	0.101-1.000	1.000+
79.	benzo(ghi)perylene	0.010	1	1	1			
80.	fluorene	0.010	1	1	1			
81.	phenanthrene (a)	0.010	-	-				
82.	dibenzo(a,h)anthracene	0.010	1	1	1			
83.	indeno (1,2,3-c,d)pyrene	0.010	1	1	1			
84.	pyrene	0.010	1	1	1			
85.	tetrachloroethylene	0.010	1	1	1			
86.	toluene	0.010	1	1	1			
87.	trichloroethylene	0.010	1	1	1			
88.	vinyl chloride (chloroethylene)	0.010	1	1	1			
89.	aldrin	0.005	1	1	1			
90.	dieldrin	0.005	1	1	1			
91.	chlordane	0.005	1	1	1			
92.	4,4'-DDT	0.005	1	1	1			
93.	4,4'-DDE	0.005	1	1	1			
94.	4,4'-DDD	0.005	1	1	1			
95.	alpha-endosulfan	0.005	1	1	1			
96.	beta-endosulfan	0.005	1	1	1			
97.	endosulfan sulfate	0.005	1	1	1			
98.	endrin	0.005	1	1	1			
99.	endrin aldehyde	0.005	1	1	1			
100.	heptachlor	0.005	1	1	1			
101.	heptachlor epoxide	0.005	1	1	1			
102.	alpha-BHC	0.005	1	1	1			
103.	beta-BHC	0.005	1	1	1			
104.	gamma-BHC	0.005	1	1	1			
105.	delta-BHC	0.005	1	1	1			
106.	PCB-1242 (b)	0.005	1	1	1			
107.	PCB-1254 (b)	0.005	-	-				
108.	PCB-1221 (b)	0.005	-	-				
109.	PCB-1232 (b)	0.005	-	-				
110.	PCB-1248 (c)	0.005	1	1	1			
111.	PCB-1260 (c)	0.005	-	-				
112.	PCB-1016 (c)	0.005	-	-				
113.	toxaphene	0.005	1	1	1			
114.	antimony	0.100	1	1	1			
115.	arsenic	0.010	1	1	1			
116.	asbestos	10 MFL	0	0				

Table V-55 (Continued)

FREQUENCY OF OCCURRENCE OF TOXIC POLLUTANTS
CLEANING OR ETCHING SCRUBBER LIQUOR
RAW WASTEWATER

Pollutant	Analytical Quantification Level (mg/l)	Number of Streams Analyzed	Number of Samples Analyzed	Number of Times Observed in Samples (mg/l)			
				ND-0.010	0.011-0.100	0.101-1.000	1.000+
117. beryllium	0.010	1	1	1			
118. cadmium	0.002	1	1	1			
119. chromium (total)	0.005	1	1	1			
120. copper	0.009	1	1	1			
121. cyanide (total)	0.100	1	1	1			
122. lead	0.020	1	1	1			
123. mercury	0.0001	1	1	1			
124. nickel	0.005	1	1	1			
125. selenium	0.01	1	1	1			
126. silver	0.02	1	1	1			
127. thallium	0.100	1	1	1			
128. zinc	0.050	1	1	1			
129. 2,3,7,8-tetrachlorodibenzo-p-dioxin	0.005	0	0				

(a), (b), (c) Reported together.

Table V-56

SAMPLING DATA
CLEANING OR ETCHING SCRUBBER LIQUOR
RAW WASTEWATER

Pollutant	Stream Code	Sample Type	Source	Concentrations (mg/l) Day 1	Day 2	Day 3	Average
Toxic Pollutants							
44. methylene chloride	C-8	1	0.220	0.014			0.014
120. copper	C-8	1	0.020	0.010			0.010
124. mercury	C-8	1	0.0004	0.0003			0.0003
Nonconventional							
alkalinity	C-8	1		110			110
aluminum	C-8	1	2	5.1			5.1
calcium	C-8	1	12	27			27
chemical oxygen demand (COD)	C-8	1	<5	<5			<5
dissolved solids	C-8	1		159			159
magnesium	C-8	1	4.6	5.2			5.2
phenols (total; by 4-AAP method)	C-8	1		0.016			0.016
sulfate	C-8	1		40			40
total organic carbon (TOC)	C-8	1	<1	<1			<1
Conventional							
oil and grease	C-8	1		13			13
suspended solids	C-8	1	<1	12			12
pH (standard units)	C-8	1	8.1	8.1			

Table V-57

FORGING SCRUBBER LIQUOR

Plant	Water Use l/kkg	Water Use gal/ton	Percent Recycle	Wastewater l/kkg	Wastewater gal/ton
1	*	*	P	28.85	6.920
2	*	*	P	159.7	38.31
3	5,937	1,424	0	4,453	1,068
4	*	*	*	*	*

*Data not available.
P Periodic discharge.

Statistical Summary

Minimum	28.85	6.920
Maximum	4,453	1,068
Mean	1,547	371.1
Median	159.7	38.31
Sample:	3 of 4 plants	

Table V-58

FREQUENCY OF OCCURRENCE OF TOXIC POLLUTANTS
FORGING SCRUBBER LIQUOR
RAW WASTEWATER

	Pollutant	Analytical Quantification Level (mg/l)	Number of Streams Analyzed	Number of Samples Analyzed	Number of Times Observed in Samples (mg/l) ND-0.010	0.011-0.100	0.101-1.000	1.000+
1.	acenaphthene	0.010	1	1	1			
2.	acrolein	0.010	1	1	1			
3.	acrylonitrile	0.010	1	1	1			
4.	benzene	0.010	1	1	1			
5.	benzidine	0.010	1	1	1			
6.	carbon tetrachloride	0.010	1	1	1			
7.	chlorobenzene	0.010	1	1	1			
8.	1,2,4-trichlorobenzene	0.010	1	1	1			
9.	hexachlorobenzene	0.010	1	1	1			
10.	1,2-dichloroethane	0.010	1	1	1			
11.	1,1,1-trichloroethane	0.010	1	1	1			
12.	hexachloroethane	0.010	1	1	1			
13.	1,1-dichloroethane	0.010	1	1	1			
14.	1,1,2-trichloroethane	0.010	1	1	1			
15.	1,1,2,2-tetrachloroethane	0.010	1	1	1			
16.	chloroethane	0.010	1	1	1			
17.	bis(chloromethyl)ether	0.010	1	1	1			
18.	bis(chloroethyl)ether	0.010	1	1	1			
19.	2-chloroethyl vinyl ether	0.010	1	1	1			
20.	2-chloronaphthalene	0.010	1	1	1			
21.	2,4,6-trichlorophenol	0.010	1	1	1			
22.	p-chloro-m-cresol	0.010	1	1	1			
23.	chloroform	0.010	1	1	1			
24.	2-chlorophenol	0.010	1	1	1			
25.	1,2-dichlorobenzene	0.010	1	1	1			
26.	1,3-dichlorobenzene	0.010	1	1	1			
27.	1,4-dichlorobenzene	0.010	1	1	1			
28.	3,3'-dichlorobenzidine	0.010	1	1	1			
29.	1,1-dichloroethylene	0.010	1	1	1			
30.	1,2-trans-dichloroethylene	0.010	1	1	1			
31.	2,4-dichlorophenol	0.010	1	1	1			
32.	1,2-dichloropropane	0.010	1	1	1			
33.	1,3-dichloropropene	0.010	1	1	1			
34.	2,4-dimethylphenol	0.010	1	1	1			
35.	2,4-dinitrotoluene	0.010	1	1	1			
36.	2,6-dinitrotoluene	0.010	1	1	1			
37.	1,2-diphenylhydrazine	0.010	1	1	1			
38.	ethylbenzene	0.010	1	1	1			
39.	fluoranthene	0.010	1	1		1		

Table V-58 (Continued)

FREQUENCY OF OCCURRENCE OF TOXIC POLLUTANTS
FORGING SCRUBBER LIQUOR
RAW WASTEWATER

	Pollutant	Analytical Quantification Level (mg/l)	Number of Streams Analyzed	Number of Samples Analyzed	Number of Times Observed in Samples (mg/l) ND-0.010	0.011-0.100	0.101-1.000	1.000+
40.	4-chlorophenyl phenyl ether	0.010	1	1	1			
41.	4-bromophenyl phenyl ether	0.010	1	1	1			
42.	bis(2-chloroisopropyl)ether	0.010	1	1	1			
43.	bis(2-chloroethoxy)methane	0.010	1	1	1			
44.	methylene chloride	0.010	1	1			1	
45.	methyl chloride (chloromethane)	0.010	1	1	1			
46.	methyl bromide (bromomethane)	0.010	1	1	1			
47.	bromoform (tribromomethane)	0.010	1	1	1			
48.	dichlorobromomethane	0.010	1	1	1			
49.	trichlorofluoromethane	0.010	1	1	1			
50.	dichlorodifluoromethane	0.010	1	1	1			
51.	chlorodibromomethane	0.010	1	1	1			
52.	hexachlorobutadiene	0.010	1	1	1			
53.	hexachlorocyclopentadiene	0.010	1	1	1			
54.	isophorone	0.010	1	1	1			
55.	naphthalene	0.010	1	1	1			
56.	nitrobenzene	0.010	1	1	1			
57.	2-nitrophenol	0.010	1	1	1			
58.	4-nitrophenol	0.010	1	1	1			
59.	2,4-dinitrophenol	0.010	1	1	1			
60.	4,6-dinitro-o-cresol	0.010	1	1	1			
61.	N-nitrosodimethylamine	0.010	1	1	1			
62.	N-nitrosodiphenylamine	0.010	1	1		1		
63.	N-nitrosodi-n-propylamine	0.010	1	1	1			
64.	pentachlorophenol	0.010	1	1	1			
65.	phenol	0.010	1	1	1			
66.	bis (2-ethylhexyl) phthalate	0.010	1	1		1		
67.	butyl benzyl phthalate	0.010	1	1	1			
68.	di-n-butyl phthalate	0.010	1	1	1			
69.	di-n-octyl phthalate	0.010	1	1	1			
70.	diethyl phthalate	0.010	1	1	1			
71.	dimethyl phthalate	0.010	1	1	1			
72.	benzo(a)anthracene	0.010	1	1		1		
73.	benzo(a)pyrene	0.010	1	1	1			
74.	benzo(b)fluoranthene	0.010	1	1	1			
75.	benzo(k)fluoranthene	0.010	1	1	1			
76.	chrysene	0.010	1	1		1		
77.	acenaphthylene	0.010	1	1	1			
78.	anthracene (a)	0.010	1	1		1		

Table V-58 (Continued)

FREQUENCY OF OCCURRENCE OF TOXIC POLLUTANTS
FORGING SCRUBBER LIQUOR
RAW WASTEWATER

	Pollutant	Analytical Quantification Level (mg/l)	Number of Streams Analyzed	Number of Samples Analyzed	Number of Times Observed in Samples (mg/l) ND-0.010	0.011-0.100	0.101-1.000	1.000+
79.	benzo(ghi)perylene	0.010	1	1	1			
80.	fluorene	0.010	1	1	1			
81.	phenanthrene (a)	0.010	-	-				
82.	dibenzo(a,h)anthracene	0.010	1	1	1			
83.	indeno (1,2,3-c,d)pyrene	0.010	1	1	1			
84.	pyrene	0.010	1	1		1		
85.	tetrachloroethylene	0.010	1	1	1			
86.	toluene	0.010	1	1	1			
87.	trichloroethylene	0.010	1	1	1			
88.	vinyl chloride (chloroethylene)	0.010	1	1	1			
89.	aldrin	0.005	1	1	1			
90.	dieldrin	0.005	1	1	1			
91.	chlordane	0.005	1	1	1			
92.	4,4'-DDT	0.005	1	1	1			
93.	4,4'-DDE	0.005	1	1	1			
94.	4,4'-DDD	0.005	1	1	1			
95.	alpha-endosulfan	0.005	1	1	1			
96.	beta-endosulfan	0.005	1	1	1			
97.	endosulfan sulfate	0.005	1	1	1			
98.	endrin	0.005	1	1	1			
99.	endrin aldehyde	0.005	1	1	1			
100.	heptachlor	0.005	1	1	1			
101.	heptachlor epoxide	0.005	1	1	1			
102.	alpha-BHC	0.005	1	1	1			
103.	beta-BHC	0.005	1	1	1			
104.	gamma-BHC	0.005	1	1	1			
105.	delta-BHC	0.005	1	1	1			
106.	PCB-1242 (b)	0.005	1	1	1			
107.	PCB-1254 (b)	0.005	-	-				
108.	PCB-1221 (b)	0.005	-	-				
109.	PCB-1232 (b)	0.005	-	-				
110.	PCB-1248 (c)	0.005	1	1	1			
111.	PCB-1260 (c)	0.005	-	-				
112.	PCB-1016 (c)	0.005	-	-				
113.	toxaphene	0.005	1	1	1			
114.	antimony	0.100	1	1	1			
115.	arsenic	0.010	1	1	1			
116.	asbestos	10 MFL	0	0				

Table V-58 (Continued)

FREQUENCY OF OCCURRENCE OF TOXIC POLLUTANTS
FORGING SCRUBBER LIQUOR
RAW WASTEWATER

Pollutant	Analytical Quantification Level (mg/l)	Number of Streams Analyzed	Number of Samples Analyzed	Number of Times Observed in Samples (mg/l)			
				ND-0.010	0.011-0.100	0.101-1.000	1.000+
117. beryllium	0.010	1	1	1			
118. cadmium	0.002	1	1	1			
119. chromium (total)	0.005	1	1	1			
120. copper	0.009	1	1	1			
121. cyanide (total)	0.100	1	1	1			
122. lead	0.020	1	1				1
123. mercury	0.0001	1	1	1			
124. nickel	0.005	1	1	1			
125. selenium	0.01	1	1	1			
126. silver	0.02	1	1	1			
127. thallium	0.100	1	1	1			
128. zinc	0.050	1	1			1	
129. 2,3,7,8-tetrachlorodibenzo-p-dioxin	0.005	0	0				

(a), (b), (c) Reported together.

Table V-59

SAMPLING DATA
FORGING SCRUBBER LIQUOR
RAW WASTEWATER

Pollutant	Stream Code	Sample Type	Source	Concentrations (mg/l) Day 1	Day 2	Day 3	Average
Toxic Pollutants							
39. fluoranthene	A-5	1	ND	0.018			0.018
44. methylene chloride	A-5	1	0.130	0.950			0.950
62. N-nitrosodiphenylamine	A-5	1	ND	0.017			0.017
66. bis (2-ethylhexyl) phthalate	A-5	1	0.200	0.075			0.075
72. benzo(a)anthracene	A-5	1	ND	0.019			0.019
76. chrysene	A-5	1	ND	0.019			0.019
78. anthracene (a) 81. phenanthrene (a)	A-5	1	ND	0.028			0.028
84. pyrene	A-5	1	ND	0.021			0.021
120. copper	A-5	1	0.010	0.010			0.010
122. lead	A-5	1	<0.20	2.000			2.000
123. mercury	A-5	1	0.0006	0.0005			0.0005
128. zinc	A-5	1	0.060	0.300			0.300
Nonconventional							
alkalinity	A-5	1		110			110
aluminum	A-5	1	<0.09	0.5			0.5
calcium	A-5	1	39	59			59
chemical oxygen demand (COD)	A-5	1	8	349			349
dissolved solids	A-5	1		388			388
magnesium	A-5	1	8.7	10.4			10.4

Table V-59 (Continued)

SAMPLING DATA
FORGING SCRUBBER LIQUOR
RAW WASTEWATER

Pollutant	Stream Code	Sample Type	Source	Concentrations (mg/l) Day 1	Day 2	Day 3	Average
phenols (total; by 4-AAP method)	A-5	1		0.067			0.067
sulfate	A-5	1		95			95
total organic carbon (TOC)	A-5	1	9	98			98
Conventional							
oil and grease	A-5	1		162			162
suspended solids	A-5	1	<1	2			2

(a) Reported together.

Table V-60

DIRECT CHILL CASTING CONTACT COOLING WATER
(ALUMINUM FORMING PLANTS)

Plant	Water Use l/kkg	Water Use gal/ton	Percent Recycle	Wastewater l/kkg	Wastewater gal/ton
1	*	*	100	0	0
2	*	*	100	0	0
3	2,743	658.0	50	0	0
4	*	*	97	0	0
5	*	*	100	0	0
6	*	*	100	0	0
7	*	*	100	0	0
8	*	*	100**	0	0
9	8.339	2.000	100	0	0
10	82,050	19,680	99	0.2989	0.0717
11	105,000	25,190	99	0.3252	0.0780
12	86,430	20,730	100	0.4169	0.1000
13	82,640	19,820	99	0.4169	0.1000
14	908.9	218.0	0	120.9	29.00
15	30,670	7,355	98	150.1	36.00
16	37,530	9,000	97	250.2	60.00
17	31,340	7,516	99	313.4	75.16
18	392.8	94.20	0	392.8	94.20
19	*	*	*	496.2	119.0
20	*	*	*	514.5	123.4
21	73,800	17,700	97	612.9	147.0
22	31,440	7,540	98	629.6	151.0
23	3,819	916.0	0	779.7	187.0
24	14,090	3,380	93	963.1	231.0
25	35,320	8,470	94	1,113	267.0
26	36,980	8,870	97	1,167	280.0
27	177,900	42,670	99	1,483	355.6
28	70,880	17,000	96	1,534	368.0
29	62,960	15,100	96	1,955	469.0
30	72,130	17,300	94	2,397	575.0
31	43,360	10,400	92	2,753	660.4
32	3,394	814.0	0	3,002	720.0
33	*	*	*	4,003	960.0
34	5,041	1,209	0	5,041	1,209
35	*	*	*	5,337	1,280
36	9,089	2,180	0	9,089	2,180
37	9,506	2,280	0	9,506	2,280
38	23,060	5,530	0	16,590	3,980
39	28,390	6,810	0	28,390	6,810
40	35,500	8,514	0	35,500	8,514
41	52,540	12,600	0	52,540	12,600
42	58,370	14,000	0	58,370	14,000
43	91,310	21,900	0	91,310	21,900

Table V-60 (Continued)

DIRECT CHILL CASTING CONTACT COOLING WATER
(ALUMINUM FORMING PLANTS)

Plant	Water Use l/kkg	Water Use gal/ton	Percent Recycle	Wastewater l/kkg	Wastewater gal/ton
44	*	*	98	*	*
45	*	*	96	*	*
46	*	*	*	*	*
47	*	*	*	*	*
48	*	*	0	*	*
49	*	*	0	*	*
50	*	*	*	*	*
51	*	*	0	*	*
52	*	*	*	*	*
53	*	*	0	*	*
54	*	*	*	*	*
55	*	*	*	*	*
56	50,030	12,000	100	*	*
57	*	*	*	*	*
58	*	*	*	*	*
59	*	*	0	*	*
60	*	*	90	*	*
61	*	*	*	*	*

*Data not available.
**Percent recycle value reported by plant; no recycle flow data given.

Statistical Summary

Minimum	8.339	2.000	0	0
Maximum	177,900	42,670	91,310	21,900
Mean	43,900	10,530	7,822	1,876
Median	35,500	8,514	629.6	151.0
Sample:	33 of 61 plants		43 of 61 plants	

Table V-61

DIRECT CHILL CASTING CONTACT COOLING WATER
(PRIMARY ALUMINUM PLANTS)

Plant	Water Use l/kkg	Water Use gal/ton	Percent Recycle	Wastewater l/kkg	Wastewater gal/ton
1	*	*	100	0	0
2	*	*	100	0	0
3	*	*	100	0	0
4	1,113	267.0	97	33.36	8.000
5	54,790	13,140	99	125.1	30.00
6	254.3	61.0	0	254.3	61.00
7	34,120	8,184	99	437.8	105.0
8	2,535	608.0	82	446.1	107.0
9	24,350	5,840	98	487.8	117.0
10	28,440	6,822	95	1,422	341.0
11	142,700	34,220	98	2,218	532.0
12	46,910	11,250	94	3,040	729.0
13	138,300	33,180	98	3,319	796.0
14	6,504	1,560	0	6,504	1,560
15	7,088	1,700	1	7,021	1,684
16	117,000	28,060	93	8,118	1,947
17	18,260	4,380	53	8,635	2,071
18	10,330	2,477	0	10,320	2,475
19	12,080	2,898	0	12,080	2,898
20	12,180	2,920	0	12,180	2,920
21	12,530	3,006	0	12,530	3,006
22	30,440	7,300	53	14,360	3,445
23	20,580	4,936	20	16,470	3,949
24	20,700	4,964	0	20,700	4,964
25	31,700	7,604	0	31,700	7,604
26	52,490	12,590	0	52,490	12,590
27	60,460	14,500	2	59,290	14,220
Statistical Summary					
Minimum	0	0		0	0
Maximum	142,700	34,220		59,290	14,220
Mean	36,910	8,853		10,520	2,524
Median	22,520	5,402		6,504	1,560
Sample:	24 of 27 plants			27 of 27 plants	

Table V-62

FREQUENCY OF OCCURRENCE OF TOXIC POLLUTANTS
DIRECT CHILL CASTING CONTACT COOLING WATER
RAW WASTEWATER

	Pollutant	Analytical Quantification Level (mg/l)	Number of Streams Analyzed	Number of Samples Analyzed	Number of Times Observed in Samples (mg/l)			
					ND-0.010	0.011-0.100	0.101-1.000	1.000+
1.	acenaphthene	0.010	12	20	18		2	
2.	acrolein	0.010	12	23	23			
3.	acrylonitrile	0.010	12	23	23			
4.	benzene	0.010	12	23	22	1		
5.	benzidine	0.010	12	20	20			
6.	carbon tetrachloride	0.010	12	23	23			
7.	chlorobenzene	0.010	12	23	23			
8.	1,2,4-trichlorobenzene	0.010	12	20	20			
9.	hexachlorobenzene	0.010	12	20	20			
10.	1,2-dichloroethane	0.010	12	23	23			
11.	1,1,1-trichloroethane	0.010	12	23	23			
12.	hexachloroethane	0.010	12	20	20			
13.	1,1-dichloroethane	0.010	12	23	23			
14.	1,1,2-trichloroethane	0.010	12	23	23			
15.	1,1,2,2-tetrachloroethane	0.010	12	23	23			
16.	chloroethane	0.010	12	23	23			
17.	bis(chloromethyl)ether	0.010	12	23	23			
18.	bis(chloroethyl)ether	0.010	12	20	20			
19.	2-chloroethyl vinyl ether	0.010	12	23	23			
20.	2-chloronaphthalene	0.010	12	20	20			
21.	2,4,6-trichlorophenol	0.010	12	20	20			
22.	p-chloro-m-cresol	0.010	12	20	20			
23.	chloroform	0.010	12	23	12	10	1	
24.	2-chlorophenol	0.010	12	20	19	1		
25.	1,2-dichlorobenzene	0.010	12	20	20			
26.	1,3-dichlorobenzene	0.010	12	20	20			
27.	1,4-dichlorobenzene	0.010	12	20	20			
28.	3,3'-dichlorobenzidine	0.010	12	20	20			
29.	1,1-dichloroethylene	0.010	12	23	23			
30.	1,2-trans-dichloroethylene	0.010	12	23	23			
31.	2,4-dichlorophenol	0.010	12	20	20			
32.	1,2-dichloropropane	0.010	12	23	23			
33.	1,3-dichloropropene	0.010	12	23	23			
34.	2,4-dimethylphenol	0.010	12	20	20			
35.	2,4-dinitrotoluene	0.010	12	20	20			
36.	2,6-dinitrotoluene	0.010	12	20	20			
37.	1,2-diphenylhydrazine	0.010	12	20	20			
38.	ethylbenzene	0.010	12	23	23			
39.	fluoranthene	0.010	12	20	20			

Table V-62 (Continued)

FREQUENCY OF OCCURRENCE OF TOXIC POLLUTANTS
DIRECT CHILL CASTING CONTACT COOLING WATER
RAW WASTEWATER

	Pollutant	Analytical Quantification Level (mg/l)	Number of Streams Analyzed	Number of Samples Analyzed	Number of Times Observed in Samples (mg/l) ND-0.010	0.011-0.100	0.101-1.000	1.000+
40.	4-chlorophenyl phenyl ether	0.010	12	20	20			
41.	4-bromophenyl phenyl ether	0.010	12	20	20			
42.	bis(2-chloroisopropyl)ether	0.010	12	20	20			
43.	bis(2-chloroethoxy)methane	0.010	12	20	20			
44.	methylene chloride	0.010	12	23	10	5	8	
45.	methyl chloride (chloromethane)	0.010	12	23	23			
46.	methyl bromide (bromomethane)	0.010	12	23	23			
47.	bromoform (tribromomethane)	0.010	12	23	23			
48.	dichlorobromomethane	0.010	12	23	23			
49.	trichlorofluoromethane	0.010	12	23	23			
50.	dichlorodifluoromethane	0.010	12	23	23			
51.	chlorodibromomethane	0.010	12	23	23			
52.	hexachlorobutadiene	0.010	12	20	20			
53.	hexachlorocyclopentadiene	0.010	12	20	20			
54.	isophorone	0.010	12	20	18	2		
55.	naphthalene	0.010	12	20	20			
56.	nitrobenzene	0.010	12	20	20			
57.	2-nitrophenol	0.010	12	20	20			
58.	4-nitrophenol	0.010	12	20	20			
59.	2,4-dinitrophenol	0.010	12	20	19	1		
60.	4,6-dinitro-o-cresol	0.010	12	20	19	1		
61.	N-nitrosodimethylamine	0.010	12	20	20			
62.	N-nitrosodiphenylamine	0.010	12	20	18	2		
63.	N-nitrosodi-n-propylamine	0.010	12	20	20			
64.	pentachlorophenol	0.010	12	20	20			
65.	phenol	0.010	12	20	17	2	1	
66.	bis (2-ethylhexyl) phthalate	0.010	12	20	11	5	4	
67.	butyl benzyl phthalate	0.010	12	20	15	1	4	
68.	di-n-butyl phthalate	0.010	12	20	12	8		
69.	di-n-octyl phthalate	0.010	12	20	18	1	1	
70.	diethyl phthalate	0.010	12	20	17	2	1	
71.	dimethyl phthalate	0.010	12	20	19	1		
72.	benzo(a)anthracene	0.010	12	20	20			
73.	benzo(a)pyrene	0.010	12	20	20			
74.	benzo(b)fluoranthene	0.010	12	20	20			
75.	benzo(k)fluoranthene	0.010	12	20	20			
76.	chrysene	0.010	12	20	20			
77.	acenaphthylene	0.010	12	20	19	1		
78.	anthracene (a)	0.010	12	20	18		2	

Table V-62 (Continued)

FREQUENCY OF OCCURRENCE OF TOXIC POLLUTANTS
DIRECT CHILL CASTING CONTACT COOLING WATER
RAW WASTEWATER

	Pollutant	Analytical Quantification Level (mg/l)	Number of Streams Analyzed	Number of Samples Analyzed	Number of Times Observed in Samples (mg/l) ND-0.010	0.011-0.100	0.101-1.000	1.000+
79.	benzo(ghi)perylene	0.010	12	20	20			
80.	fluorene	0.010	12	20	18	2		
81.	phenanthrene (a)	0.010	-	-				
82.	dibenzo(a,h)anthracene	0.010	12	20	20			
83.	indeno (1,2,3-c,d)pyrene	0.010	12	20	20			
84.	pyrene	0.010	12	20	20			
85.	tetrachloroethylene	0.010	12	23	23			
86.	toluene	0.010	12	23	23			
87.	trichloroethylene	0.010	12	23	23			
88.	vinyl chloride (chloroethylene)	0.010	12	23	23			
89.	aldrin	0.005	12	16	16			
90.	dieldrin	0.005	12	16	16			
91.	chlordane	0.005	12	16	16			
92.	4,4'-DDT	0.005	12	16	16			
93.	4,4'-DDE	0.005	12	16	16			
94.	4,4'-DDD	0.005	12	16	16			
95.	alpha-endosulfan	0.005	12	16	16			
96.	beta-endosulfan	0.005	12	16	16			
97.	endosulfan sulfate	0.005	12	16	16			
98.	endrin	0.005	12	16	16			
99.	endrin aldehyde	0.005	12	16	16			
100.	heptachlor	0.005	12	16	16			
101.	heptachlor epoxide	0.005	12	16	16			
102.	alpha-BHC	0.005	12	16	16			
103.	beta-BHC	0.005	12	16	16			
104.	gamma-BHC	0.005	12	16	16			
105.	delta-BHC	0.005	12	16	16			
106.	PCB-1242 (b)	0.005	12	16	14	2		
107.	PCB-1254 (b)	0.005	-	-				
108.	PCB-1221 (b)	0.005	-	-				
109.	PCB-1232 (b)	0.005	-	-				
110.	PCB-1248 (c)	0.005	12	16	14	2		
111.	PCB-1260 (c)	0.005	-	-				
112.	PCB-1016 (c)	0.005	-	-				
113.	toxaphene	0.005	12	16	16			
114.	antimony	0.100	7	11	11			
115.	arsenic	0.010	12	20	20			
116.	asbestos	10 MFL	0	0				

Table V-62 (Continued)

FREQUENCY OF OCCURRENCE OF TOXIC POLLUTANTS
DIRECT CHILL CASTING CONTACT COOLING WATER
RAW WASTEWATER

Pollutant	Analytical Quantification Level (mg/l)	Number of Streams Analyzed	Number of Samples Analyzed	Number of Times Observed in Samples (mg/l)			
				ND-0.010	0.011-0.100	0.101-1.000	1.000+
117. beryllium	0.010	12	20	20			
118. cadmium	0.002	12	20	19	1		
119. chromium (total)	0.005	12	20	18	1		1
120. copper	0.009	12	20	9	11		
121. cyanide (total)	0.100	12	20	20			
122. lead	0.020	12	20	10	10		
123. mercury	0.0001	12	20	19	1		
124. nickel	0.005	12	20	19	1		
125. selenium	0.01	7	11	11			
126. silver	0.02	7	11	11			
127. thallium	0.100	7	11	11			
128. zinc	0.050	12	20	6	5	9	
129. 2,3,7,8-tetrachlorodibenzo-p-dioxin	0.005	0	0				

(a), (b), (c) Reported together.

Table V-63

SAMPLING DATA
DIRECT CHILL CASTING CONTACT COOLING WATER
RAW WASTEWATER

Pollutant	Stream Code	Sample Type	Source	Concentrations (mg/l) Day 1	Day 2	Day 3	Average
Toxic Pollutants							
1. acenaphthene	D-7	2	ND	ND			
	E-2	2	*	0.440			0.440
	E-3	3	*	0.280	ND	ND	0.280
	F-2	1	ND	ND			
	F-3	6	ND	ND			
	H-1	2	*	ND			
	H-2	3	*	ND	ND	ND	
	L-1	7	ND	ND			
	N-3	6	ND	ND			
	P-2	3	ND	ND	ND	ND	
	R-2	1	ND	ND			
	U-2	3	ND	ND	ND	ND	
4. benzene	D-7	1	ND	*			*
	E-2	1	ND	ND	*	*	*
	E-3	1	ND	ND			
	F-2	1	ND	0.013			0.013
	F-3	1	ND	ND	ND	*	*
	H-1	1	0.023	*			*
	H-2	1	0.023	*	*	*	*
	L-1	1	ND	*			
	N-3	1	ND	ND	*	ND	*
	P-2	1	ND	ND	ND	ND	
	R-2	1	ND	ND			
	U-2	1	*	*	ND		*
23. chloroform	D-7	1	0.020	*			*
	E-2	1	*	0.065			0.065
	E-3	1	*	0.066	0.072	0.150	0.096
	F-2	1	2.012	0.036			0.036
	F-3	1	0.012	0.012	0.019	0.015	0.015
	H-1	1	0.066	0.014			0.014
	H-2	1	0.066	0.027	0.012	*	0.013
	L-1	1	0.100	*			*
	N-3	1	0.040	*	ND	*	*
	P-2	1	ND	ND	ND	*	*
	R-2	1	0.040	*			*
	U-2	1	*	ND	ND		

Table V-63 (Continued)

SAMPLING DATA
DIRECT CHILL CASTING CONTACT COOLING WATER
RAW WASTEWATER

Pollutant	Stream Code	Sample Type	Source	Concentrations (mg/l) Day 1	Day 2	Day 3	Average
24. 2-chlorophenol	D-7	2	ND	ND			
	E-2	2	ND	ND			
	E-3	3	ND	ND	ND	ND	
	F-2	1	ND	0.012			0.012
	F-3	6	ND	ND			
	H-1	2	ND	ND			
	H-2	3	ND	ND	ND	ND	
	L-1	7	ND	ND			
	N-3	6	ND	ND			
	P-2	3	ND	ND	ND	ND	
	R-2	1	ND	ND			
	U-2	3	ND	ND	ND	ND	
44. methylene chloride	D-7	1	*	0.230			0.230
	E-2	1	0.017	*			*
	E-3	1	0.170	0.013	0.058	0.393	0.155
	F-2	1	0.024	0.185			0.185
	F-3	1	0.024	0.040	0.084	0.160	0.095
	H-1	1	1.100	0.150			0.150
	H-2	1	1.100	0.110	0.140	0.034	0.095
	L-1	1	ND	*			*
	N-3	1	ND	*	*	*	*
	P-2	1	*	*	*	*	
	R-2	1	*	*			*
	U-2	1	*	0.470	*		0.235
54. isophorone	D-7	2	ND	ND			
	E-2	2	ND	ND			
	E-3	3	ND	ND	0.035	0.023	0.029
	F-2	1	ND	ND			
	F-3	6	ND	ND			
	H-1	2	0.011	ND			
	H-2	3	0.011	ND	ND	ND	
	I-1	7	ND	ND			
	N-3	6	ND	ND			
	P-2	3	ND	ND	ND	ND	
	R-2	1	ND	ND			
	U-2	3	ND	ND	ND	ND	

Table V-63 (Continued)

SAMPLING DATA
DIRECT CHILL CASTING CONTACT COOLING WATER
RAW WASTEWATER

Pollutant	Stream Code	Sample Type	Source	Concentrations (mg/l) Day 1	Day 2	Day 3	Average
59. 2,4-dinitrophenol	D-7	2	ND	ND			
	E-2	2	ND	ND			
	E-3	3	ND	0.042	ND	ND	0.042
	F-2	1	ND	ND			
	F-3	6	ND	ND			
	H-1	2	ND	ND			
	H-2	3	ND	ND	ND	ND	
	L-1	7	ND	ND			
	N-3	6	ND	ND			
	P-2	3	ND	ND	ND	ND	
	R-2	1	ND	ND			
	U-2	3	ND	ND	ND	ND	
60. 4,6-dinitro-o-cresol	D-7	2	ND	ND			
	E-2	2	ND	ND			
	E-3	3	ND	0.053	ND	ND	0.053
	F-2	1	ND	ND			
	F-3	6	ND	ND			
	H-1	2	ND	ND			
	H-2	3	ND	ND	ND	ND	
	L-1	7	ND	ND			
	N-3	6	ND	ND			
	P-2	3	ND	ND	ND	ND	
	R-2	1	ND	ND			
	U-2	3	ND	ND	ND	ND	
62. N-nitrosodiphenylamine	D-7	2	ND	ND			
	E-2	2	ND	ND			
	E-3	3	ND	ND	0.044	0.057	0.051
	F-2	1	ND	ND			
	F-3	6	ND	ND			
	H-1	2	ND	ND			
	H-2	3	ND	ND	ND	ND	
	L-1	7	ND	ND			
	N-3	6	ND	ND			
	P-2	3	ND	ND	ND	ND	
	R-2	1	ND	ND			
	U-2	3	ND	ND	ND	ND	

Table V-63 (Continued)

SAMPLING DATA
DIRECT CHILL CASTING CONTACT COOLING WATER
RAW WASTEWATER

Pollutant	Stream Code	Sample Type	Source	Concentrations (mg/l) Day 1	Day 2	Day 3	Average
65. phenol	D-7	2	ND	ND			
	E-2	2	*	0.056			0.056
	E-3	3	*	ND	ND	ND	
	F-2	1	ND	ND			
	F-3	6	ND	ND			
	H-1	2	ND	ND			
	H-2	3	ND	*	ND	ND	*
	L-1	7	ND	ND			
	N-3	6	ND	0.050			0.050
	P-2	3	ND	*	*	*	*
	R-2	1	ND	0.500			0.500
	U-2	3	ND	ND	ND	ND	
66. bis(2-ethylhexyl) phthalate	D-7	2	*	0.046			0.046
	E-2	2	*	0.064			0.064
	E-3	3	*	0.140	ND	ND	0.140
	F-2	1	0.025	0.023			0.023
	F-3	6	0.025	*			*
	H-1	2	0.065	0.280			0.280
	H-2	3	0.065	0.066	0.200	0.180	0.149
	L-1	7	ND	ND			
	N-3	6	ND	ND			
	P-2	3	*	ND	*	*	*
	R-2	1	*	ND			
	U-2	3	*	0.020	*	*	*
67. butyl benzyl phthalate	D-7	2	ND	0.037			0.037
	E-2	2	*	ND			
	E-3	3	*	ND	*	ND	*
	F-2	1	*	ND			
	F-3	6	*	ND			
	H-1	2	ND	0.230			0.230
	H-2	3	ND	0.130	0.340	0.600	0.360
	L-1	7	ND	ND			
	N-3	6	ND	ND			
	P-2	3	ND	ND	ND	ND	
	R-2	1	ND	ND			
	U-2	3	ND	ND	ND	ND	

Table V-63 (Continued)

SAMPLING DATA
DIRECT CHILL CASTING CONTACT COOLING WATER
RAW WASTEWATER

Pollutant	Stream Code	Sample Type	Source	Concentrations (mg/l) Day 1	Day 2	Day 3	Average
68. di-n-butyl phthalate	D-7	2	*	ND			
	E-2	2	*	0.043			0.043
	E-3	3	*	0.055	0.013	*	0.023
	F-2	1	*	0.011			0.011
	F-3	6	*	ND			
	H-1	2	*	0.029			0.029
	H-2	3	*	0.015	0.022	0.022	0.020
	L-1	7	ND	ND			
	N-3	6	ND	ND			
	P-2	3	ND	*	ND	ND	*
	R-2	1	*	ND			
	U-2	3	ND	ND	*	*	*
69. di-n-octyl phthalate	D-7	2	ND	ND			
	E-2	2	ND	ND			
	E-3	3	ND	ND	ND	ND	
	F-2	1	ND	ND			
	F-3	6	ND	ND			
	H-1	2	ND	0.094			0.094
	H-2	3	ND	ND	0.120	ND	0.120
	L-1	7	ND	ND			
	N-3	6	ND	ND			
	P-2	3	ND	ND	ND	ND	
	R-2	1	ND	ND			
	U-2	3	ND	*	ND	ND	*
70. diethyl phthalate	D-7	2	ND	ND			
	E-2	2	*	0.073			0.073
	E-3	3	*	0.110	ND	ND	0.110
	F-2	1	ND	*			*
	F-3	6	ND	0.012			0.012
	H-1	2	*	ND			
	H-2	3	*	*	ND	ND	*
	L-1	7	ND	ND			
	N-3	6	ND	ND			
	P-2	3	ND	ND	ND	ND	
	R-2	1	ND	ND			
	U-2	3	*	*	*	*	*

Table V-63 (Continued)

SAMPLING DATA
DIRECT CHILL CASTING CONTACT COOLING WATER
RAW WASTEWATER

Pollutant	Stream Code	Sample Type	Source	Concentrations (mg/l) Day 1	Day 2	Day 3	Average
71. dimethyl phthalate	D-7	2	ND	ND			
	E-2	2	*	ND			
	E-3	3	*	0.053	ND	ND	0.053
	F-2	1	ND	*			*
	F-3	6	ND	ND			
	H-1	2	*	ND			
	H-2	3	*	ND	ND	ND	
	L-1	7	ND	ND			
	N-3	6	ND	*			*
	P-2	3	ND	*	ND	ND	*
	R-2	1	ND	ND			
	U-2	3	ND	ND	*	*	*
77. acenaphthylene	D-7	2	ND	ND			
	E-2	2	*	ND			
	E-3	3	*	ND	0.012	*	0.006
	F-2	1	*	ND			
	F-3	6	*	ND			
	H-1	2	*	ND			
	H-2	3	*	ND	ND	ND	
	L-1	7	ND	ND			
	N-3	6	ND	ND			
	P-2	3	ND	ND	ND	ND	
	R-2	1	ND	ND			
	U-2	3	ND	ND	ND	ND	
78. anthracene (a) 81. phenanthrene (a)	D-7	2	ND	ND			
	E-2	2	ND	ND			
	E-3	3	ND	ND	0.130	0.148	0.139
	F-2	1	ND	ND			
	F-3	6	ND	ND			
	H-1	2	ND	ND			
	H-2	3	ND	ND	ND	ND	
	L-1	7	ND	ND			
	N-3	6	ND	*			*
	P-2	3	ND	ND	ND	ND	
	R-2	1	ND	ND			
	U-2	3	ND	*	ND	ND	*

Table V-63 (Continued)

SAMPLING DATA
DIRECT CHILL CASTING CONTACT COOLING WATER
RAW WASTEWATER

Pollutant	Stream Code	Sample Type	Source	Concentrations (mg/l) Day 1	Day 2	Day 3	Average
80. fluorene	D-7	2	ND	ND			
	E-2	2	*	ND			
	E-3	3	*	ND	0.024	0.023	0.024
	F-2	1	ND	ND			
	F-3	6	ND	ND			
	H-1	2	*	ND			
	H-2	3	*	ND	ND	ND	
	L-1	7	ND	ND			
	N-3	6	ND	ND			
	P-2	3	ND	ND	ND	ND	
	R-2	1	ND	ND			
	U-2	3	ND	ND	ND	ND	
91. chlordane	D-7	2	**	**			**
	E-2	2	**	0.0075			0.0075
	E-3	3	**	0.0056			0.0056
	F-2	1	**	**			**
	F-3	6	**	**			**
	H-1	2	**	ND			
	H-2	3	**	**			**
	L-1	7	ND	ND			
	N-3	6	ND	ND			
	P-2	3	ND	ND	ND	ND	
	R-2	1	ND	ND			
	U-2	3	ND	ND	ND	ND	
106. PCB-1242 (b)	D-7	2	**	**			**
107. PCB-1254 (b)	E-2	2	**	0.032			0.032
108. PCB-1221 (b)	E-3	3	88.000	0.025			0.025
	F-2	1	**	ND			
	F-3	6	**	**			**
	H-1	2	0.015	ND			
	H-2	3	0.015	ND			
	L-1	7	ND	ND			
	N-3	6	ND	ND			
	P-2	3	ND	ND	ND	ND	
	R-2	1	ND	ND			
	U-2	3	ND	ND	ND	ND	

Table V-63 (Continued)

SAMPLING DATA
DIRECT CHILL CASTING CONTACT COOLING WATER
RAW WASTEWATER

Pollutant	Stream Code	Sample Type	Source	Concentrations (mg/l) Day 1	Day 2	Day 3	Average
109. PCB-1232 (c)	D-7	2	**	**			**
110. PCB-1248 (c)	E-2	2	**	0.032			0.032
111. PCB-1260 (c)	E-3	3	**	0.027			0.027
112. PCB-1016 (c)	F-2	1	**	ND			
	F-3	6	**	**			**
	H-1	2	**	**			**
	H-2	3	**	ND			
	L-1	7	ND	ND			
	N-3	6	ND	ND			
	P-2	3	ND	ND	ND	ND	
	R-2	1	ND	ND			
	U-2	3	ND	ND	ND	ND	
118. cadmium	D-7	2	<0.002	<0.002			<0.002
	E-2	2	<0.002	<0.002			<0.002
	E-3	3	<0.002	<0.002	<0.002	<0.002	<0.002
	F-2	1	<0.002	<0.002			<0.002
	F-3	6	<0.002	<0.002			<0.002
	H-1	2	<0.002	<0.002			<0.002
	H-2	3	<0.002	<0.002	<0.002	<0.002	<0.002
	L-1	7	<0.0005	0.0011			0.0011
	N-3	6	<0.0005	0.0008			0.0008
	P-2	3	0.0011	<0.0005	0.0026	<0.0005	<0.0012
	R-2	1	<0.0005	0.020			0.020
	U-2	3	0.002	0.002	0.002	<0.001	<0.002
119. chromium	D-7	2	<0.005	0.007			0.007
	E-2	2	<0.005	<0.005			<0.005
	E-3	3	<0.005	<0.005	<0.005	<0.005	<0.005
	F-2	1	<0.005	<0.005			<0.005
	F-3	6	<0.005	<0.005			<0.005
	H-1	2	<0.005	<0.005			<0.005
	H-2	3	<0.005	<0.005	<0.005	<0.005	<0.005
	L-1	7	<0.001	<0.001			<0.001
	N-3	6	<0.001	<0.001			<0.001
	P-2	3	<0.001	0.002	0.053	0.004	0.020
	R-2	1	<0.0001	1.600			1.600
	U-2	3	<0.001	0.002	<0.001	<0.001	<0.001

Table V-63 (Continued)

SAMPLING DATA
DIRECT CHILL CASTING CONTACT COOLING WATER
RAW WASTEWATER

Pollutant	Stream Code	Sample Type	Source	Concentrations (mg/l) Day 1	Day 2	Day 3	Average
120. copper	D-7	2	<0.009	0.010			0.010
	E-2	2	<0.009	0.010			0.010
	E-3	3	<0.009	<0.009	0.010	0.010	<0.010
	F-2	1	<0.009	<0.009			<0.009
	F-3	6	<0.009	<0.009			<0.009
	H-1	2	0.010	0.020			0.020
	H-2	3	0.010	0.020	0.020	0.020	0.020
	L-1	7	0.010	0.004			0.004
	N-3	6	0.008	0.007			0.007
	P-2	3	0.004	0.030	0.020	0.019	0.023
	R-2	1	0.001	0.015			0.015
	U-2	3	0.013	0.012	0.016	0.011	0.013
122. lead	D-7	2	<0.020	0.020			0.020
	E-2	2	<0.020	0.020			0.020
	E-3	3	<0.020	<0.020	<0.020	<0.020	<0.020
	F-2	1	<0.020	<0.020			<0.020
	F-3	6	<0.020	<0.020			<0.020
	H-1	2	<0.020	0.100			0.100
	H-2	3	<0.020	0.090	0.090	0.090	0.090
	L-1	7	0.014	0.021			0.021
	N-3	6	0.010	0.014			0.014
	P-2	3	0.002	0.002	0.006	0.004	0.004
	R-2	1	<0.001	0.006			0.006
	U-2	3	0.010	0.012	0.007	0.011	0.010
123. mercury	D-7	2	0.0006	0.0005			0.0005
	E-2	2	0.0004	0.0005			0.0005
	E-3	3	0.0004	0.0004	0.0008	0.0004	0.0005
	F-2	1	0.0006	0.020			0.020
	F-3	6	0.0006	<0.0001			<0.0001
	H-1	2	0.0004	0.0002			0.0002
	H-2	3	0.0004	<0.0001	0.0002	0.005	<0.002
	L-1	7	0.0073	0.0076			0.0076
	N-3	6	0.0091	0.003			0.003
	P-2	3	<0.0001	<0.0001	<0.0004	<0.0001	<0.0002
	R-2	1	<0.0007	<0.001			<0.001
	U-2	3	0.005	0.002	0.002	0.002	0.002

Table V-63 (Continued)

SAMPLING DATA
DIRECT CHILL CASTING CONTACT COOLING WATER
RAW WASTEWATER

Pollutant	Stream Code	Sample Type	Source	Concentrations (mg/l) Day 1	Day 2	Day 3	Average
124. nickel	D-7	2	<0.005	<0.005			<0.005
	E-2	2	<0.005	<0.005			<0.005
	E-3	3	<0.005	<0.005	<0.005	<0.005	<0.005
	F-2	1	<0.005	<0.005			<0.005
	F-3	6	<0.005	<0.005			<0.005
	H-1	2	<0.005	<0.005			<0.005
	H-2	3	<0.005	<0.005	<0.005	<0.005	<0.005
	L-1	7	<0.001	<0.001			<0.001
	N-3	6	<0.001	<0.001			<0.001
	P-2	3	<0.001	<0.001	<0.001	<0.001	<0.001
	R-2	1	<0.001	<0.001			<0.001
	U-2	3	0.016	0.020	0.003	<0.003	<0.009
128. zinc	D-7	2	<0.050	0.100			0.100
	E-2	2	<0.050	0.100			0.100
	E-3	3	<0.050	0.100	0.100	0.100	0.100
	F-2	1	<0.050	<0.050			<0.050
	F-3	6	<0.050	<0.050			<0.050
	H-1	2	0.100	0.200			0.200
	H-2	3	0.100	0.300	0.300	0.200	0.270
	L-1	7	0.053	<0.010			<0.010
	N-3	6	<0.010	0.370			0.370
	P-2	3	<0.010	<0.010	<0.010	<0.010	<0.010
	R-2	1	0.053	1.0			1.0
	U-2	3	ND	0.220	0.240	0.140	0.200
Nonconventional							
alkalinity	D-7	2		140			140
	E-2	2		90			90
	E-3	1		90	84	76	83
	F-2	1		140			140
	F-3	6		130	130	150	137
	H-1	2	107	97			97
	H-2	1		100	134	150	128
	L-1	6		41			41
	N-3	6		70			70
	P-2	2		28	22	22	24
	R-2	1		160			160
	U-2	1		64	69	82	72

Table V-63 (Continued)

SAMPLING DATA
DIRECT CHILL CASTING CONTACT COOLING WATER
RAW WASTEWATER

Pollutant	Stream Code	Sample Type	Source	Concentrations (mg/l) Day 1	Day 2	Day 3	Average
Nonconventional							
aluminum	D-7	2	0.200	0.7			0.7
	E-2	2	<0.09	<0.295			<0.295
	E-3	3	<0.09	<0.295	<0.245	<0.195	<0.245
	F-2	1	<0.09	0.200			0.200
	F-3	6	<0.09	0.2	2	2	1
	H-1	2	<0.09	0.9			0.9
	H-2	3	<0.09	0.700	0.800	0.700	0.733
	L-1	7	<0.5	<0.5			<0.5
	N-3	6	<0.5	<0.050			<0.050
	P-2	3	<0.5	0.88	0.97	0.97	0.94
	R-2	1	<0.500				
	U-2	3		<0.100	<0.100	<0.100	<0.100
calcium	D-7	2	38	55			55
	E-2	2	68	77			77
	E-3	1	68	73	72	77	74
	F-2	1	<5	2.8			2.8
	F-3	6	<5	2.8	0.63	0.42	1.3
	H-1	2	52	56			56
	H-2	1	52	56	69	78	68
	L-1	6	9	13			13
	N-3	6	28	30			30
	P-2	2	0.300	101	106	107	105
	R-2	1	60	80			80
	U-2	1		13.2	86.9	150	83
chemical oxygen demand (COD)	D-7	2		62			62
	E-2	2	<5	281			281
	E-3	3	<5	236	350	373	320
	F-2	1		<5			<5
	F-3	6		12			12
	H-1	1		419			419
	H-2	3		374	312	343	343
	L-1	7	<5	24			24
	N-3	6	5	82			82
	P-2	3	<5	24	32	39	32
	R-2	1		396			396
	U-2	3		14	25	33	24

Table V-63 (Continued)

SAMPLING DATA
DIRECT CHILL CASTING CONTACT COOLING WATER
RAW WASTEWATER

Pollutant	Stream Code	Sample Type	Source	Concentrations (mg/l) Day 1	Day 2	Day 3	Average
dissolved solids	D-7	2		236			236
	E-2	2		327			327
	E-3	1		336	385	372	364
	F-2	1		255			255
	F-3	6		224	220		222
	H-1	2	173	237			237
	H-2	1	173	246	273	272	264
	L-1	6		150			150
	N-3	6		230			230
	P-2	2		810	860	810	827
	R-2	1		790			790
	U-2	1		830	820	810	820
magnesium	D-7	2	12	14			14
	E-2	2	3.8	3.7			3.7
	E-3	1	3.8	3.6	3.6	3.6	3.6
	F-2	1	<0.1	0.12			0.12
	F-3	6	<0.1	0.200	0.210	0.160	0.190
	H-1	2	3.6	4.2			4.2
	H-2	1	3.6	4.5	5.6	5.8	5.3
	L-1	6	2.24	3.07			3.07
	N-3	6	4.39	7.97			7.97
	P-2	2	0.08	40	41	39	40
	R-2	1	22.1	2.61			2.61
	U-2	1		16.9	14.9	16.9	16.2
phenols (total; by 4-AAP method)	D-7	2		0.01			0.01
	E-2	2		0.003			0.003
	E-3	1		0.004	0.005	0.014	0.008
	F-2	1		<0.001			<0.001
	F-3	6		0.002			0.002
	H-1	2		0.014			0.014
	H-2	1		0.032	0.016	0.011	0.020
	L-1	6		0.004			0.004
	N-3	6		0.077			0.077
	P-2	2		0.006	0.012		0.009
	R-2	1		0.117			0.117
	U-2	1		0.018	0.027		0.022

Table V-63 (Continued)

SAMPLING DATA
DIRECT CHILL CASTING CONTACT COOLING WATER
RAW WASTEWATER

Pollutant	Stream Code	Sample Type	Source	Concentrations (mg/l) Day 1	Day 2	Day 3	Average
sulfate	D-7	2		50			50
	E-2	2		90			90
	E-3	1		130	110	90	110
	F-2	1		10			10
	F-3	6		10	10	10	10
	H-1	2	<10	31			31
	H-2	1	<10	42	18	20	27
	L-1	6		9			9
	N-3	6		40			40
	P-2	2		24	21	23	23
	R-2	1		230			230
	U-2	1		370	340	350	353
total organic carbon (TOC)	D-7	2		25			25
	E-2	2	1	150			150
	E-3	3	1	136	119	153	136
	F-2	1		1			1
	F-3	6		5			5
	H-1	1		93			93
	H-2	3		38	76	74	63
	L-1	7	2.8	5.9			5.9
	N-3	6	2.7	19			19
	P-2	3	2	5.6	4	4	5
	R-2	1		13			13
	U-2	3		2.8	3.3	5.1	3.7
Conventional							
oil and grease	D-7	1		27			27
	E-2	1		137			137
	E-3	1		226	236	181	214
	F-2	1		5			5
	F-3	1		7	10	15	11
	H-1	1		50			50
	H-2	1		65	155	140	120
	L-1	1		19			19
	N-3	6	<5	103	32		68
	P-2	1		15	7	8	10
	R-2	1		198			198
	U-2	1		<5	8	59	<24

Table V-63 (Continued)

SAMPLING DATA
DIRECT CHILL CASTING CONTACT COOLING WATER
RAW WASTEWATER

Pollutant	Stream Code	Sample Type	Source	Concentrations (mg/l) Day 1	Day 2	Day 3	Average
suspended solids	D-7	2		37			37
	E-2	2	<1	44			44
	E-3	3	<1	26	45	40	37
	F-2	1		<1			<1
	F-3	6		6			6
	H-1	1		164			164
	H-2	3		113	135	149	132
	L-1	6	<2	7			7
	N-3	6	<2	3			3
	P-2	3	5	14	14	19	16
	R-2	1		220			220
	U-2	3		4	5	7	5
pH (standard units)	D-7	1		7.9	7.5		
	E-2	1		7			
	E-3	1		6.8	7.9	7.0	
	F-2	1	7.55	7.6			
	F-3	1	7.55	7.5	7.45	7.55	
	H-1	1		7.2			
	H-2	1		7.8			
	L-1	1		7.4	7.4		
	N-3	1	7.1	7.1	7.9	6.9	
	P-2	1		7.8	8.4	8.1	
	R-2	1		7.9			
	U-2	1	8	6			

(a), (b), (c) Reported together.

Note: Stream N-3 treated by oil separation.

Table V-64

CONTINUOUS ROD CASTING CONTACT COOLING WATER

Plant	Water Use l/kkg	Water Use gal/ton	Percent Recycle	Wastewater l/kkg	Wastewater gal/ton
1	0	0	Dry	0	0
2	1,042	250	0	1,042	250.0
3	*	*	P	*	*

*Sufficient data not available to calculate these values.
P Total recycle with periodic discharge.

Statistical Summary

Minimum	0	0	0	0
Maximum	1,042	250.0	1,042	250.0
Mean	521.3	125.0	521.3	125.0
Median	521.3	125.0	521.3	125.0
Sample:	2 of 3 plants		2 of 3 plants	
Nonzero Mean	1,042	250.0	1,042	250.0
Sample:	1 of 3 plants		1 of 3 plants	

Table V-65

CONTINUOUS ROD CASTING SPENT LUBRICANT

Plant	Water Use l/kkg	Water Use gal/ton	Percent Recycle	Wastewater l/kkg	Wastewater gal/ton
1	*	*	100	0	0
2	*	*	100 (P)	*	*
3	*	*	*	*	*

*Sufficient data not available to calculate these values.
P Periodic discharge.

Table V-66

CONTINUOUS SHEET CASTING SPENT LUBRICANT

Plant	Water Use l/kkg	Water Use gal/ton	Percent Recycle	Wastewater l/kkg	Wastewater gal/ton
1	*	*	100	0	0
2	5.087	1.220	* (P)	1.017	0.2440
3	*	*	* (P)	2.668	0.6400
4	*	*	* (P)	*	*
5	*	*	* (P)	*	*

*Sufficient data not available to calculate these values.
P Periodic discharge.

Statistical Summary

Minimum	0	0
Maximum	2.668	0.6400
Mean	1.229	0.2947
Median	1.017	0.2440
Sample:	3 of 5 plants	

Note: An additional 7 continuous sheet casting plants did not mention a lubricant; but one is probably used.

Table V-67

DEGASSING SCRUBBER LIQUOR (PRIMARY ALUMINUM PLANTS)

Plant	Water Use l/kkg	Water Use gal/ton	Percent Recycle	Wastewater l/kkg	Wastewater gal/ton
1	*	*	*	68.38	16.40
2	1,854	444.7	91	169.9	40.76
3	3,344	802.0	15	2,844	682.0
4	3,127	750.0	0	3,127	750.0
5	36,010	8,637	8	33,310	7,990
6	*	*	*	*	*
7	*	*	*	*	*
8	*	*	*	*	*
9	*	*	*	*	*
10	*	*	*	*	*
11	*	*	*	*	*

*Data not available or not applicable.

Statistical Summary

Minimum	1,854	444.7	68.38	16.40
Maximum	36,010	8,637	33,310	7,990
Mean	11,080	2,658	7,905	1,896
Median	3,235	776.0	2,844	682
Sample:	4 of 11 plants		5 of 11 plants	

Note: Insufficient information is available to calculate water use and wastewater values for the aluminum forming plant with this waste stream.

Table V-68

FREQUENCY OF OCCURRENCE OF TOXIC POLLUTANTS
DEGASSING SCRUBBER LIQUOR
RAW WASTEWATER

	Pollutant	Analytical Quantification Level (mg/l)	Number of Streams Analyzed	Number of Samples Analyzed	Number of Times Observed in Samples (mg/l)			
					ND-0.010	0.011-0.100	0.101-1.000	1.000+
1.	acenaphthene	0.010	1	3	3			
2.	acrolein	0.010	1	3	3			
3.	acrylonitrile	0.010	1	3	3			
4.	benzene	0.010	1	3	3			
5.	benzidine	0.010	1	3	3			
6.	carbon tetrachloride	0.010	1	3	3			
7.	chlorobenzene	0.010	1	3	3			
8.	1,2,4-trichlorobenzene	0.010	1	3	3			
9.	hexachlorobenzene	0.010	1	3	3			
10.	1,2-dichloroethane	0.010	1	3	3			
11.	1,1,1-trichloroethane	0.010	1	3	3			
12.	hexachloroethane	0.010	1	3	3			
13.	1,1-dichloroethane	0.010	1	3	3			
14.	1,1,2-trichloroethane	0.010	1	3	3			
15.	1,1,2,2-tetrachloroethane	0.010	1	3	3			
16.	chloroethane	0.010	1	3	3			
17.	bis(chloromethyl)ether	0.010	1	3	3			
18.	bis(chloroethyl)ether	0.010	1	3	3			
19.	2-chloroethyl vinyl ether	0.010	1	3	3			
20.	2-chloronaphthalene	0.010	1	3	3			
21.	2,4,6-trichlorophenol	0.010	1	3	3			
22.	p-chloro-m-cresol	0.010	1	3	3			
23.	chloroform	0.010	1	3	2	1		
24.	2-chlorophenol	0.010	1	3	3			
25.	1,2-dichlorobenzene	0.010	1	3	3			
26.	1,3-dichlorobenzene	0.010	1	3	3			
27.	1,4-dichlorobenzene	0.010	1	3	3			
28.	3,3'-dichlorobenzidine	0.010	1	3	3			
29.	1,1-dichloroethylene	0.010	1	3	3			
30.	1,2-trans-dichloroethylene	0.010	1	3	3			
31.	2,4-dichlorophenol	0.010	1	3	3			
32.	1,2-dichloropropane	0.010	1	3	3			
33.	1,3-dichloropropene	0.010	1	3	3			
34.	2,4-dimethylphenol	0.010	1	3	3			
35.	2,4-dinitrotoluene	0.010	1	3	3			
36.	2,6-dinitrotoluene	0.010	1	3	3			
37.	1,2-diphenylhydrazine	0.010	1	3	3			
38.	ethylbenzene	0.010	1	3	3			
39.	fluoranthene	0.010	1	3	3			

Table V-68 (Continued)

FREQUENCY OF OCCURRENCE OF TOXIC POLLUTANTS
DEGASSING SCRUBBER LIQUOR
RAW WASTEWATER

	Pollutant	Analytical Quantification Level (mg/l)	Number of Streams Analyzed	Number of Samples Analyzed	Number of Times Observed in Samples (mg/l)			
					ND-0.010	0.011-0.100	0.101-1.000	1.000+
40.	4-chlorophenyl phenyl ether	0.010	1	3	3			
41.	4-bromophenyl phenyl ether	0.010	1	3	3			
42.	bis(2-chloroisopropyl)ether	0.010	1	3	3			
43.	bis(2-chloroethoxy)methane	0.010	1	3	3			
44.	methylene chloride	0.010	1	3	3			
45.	methyl chloride (chloromethane)	0.010	1	3	3			
46.	methyl bromide (bromomethane)	0.010	1	3	3			
47.	bromoform (tribromomethane)	0.010	1	3	3			
48.	dichlorobromomethane	0.010	1	3	3			
49.	trichlorofluoromethane	0.010	1	3	3			
50.	dichlorodifluoromethane	0.010	1	3	3			
51.	chlorodibromomethane	0.010	1	3	3			
52.	hexachlorobutadiene	0.010	1	3	3			
53.	hexachlorocyclopentadiene	0.010	1	3	3			
54.	isophorone	0.010	1	3	3			
55.	naphthalene	0.010	1	3	3			
56.	nitrobenzene	0.010	1	3	3			
57.	2-nitrophenol	0.010	1	3	3			
58.	4-nitrophenol	0.010	1	3	3			
59.	2,4-dinitrophenol	0.010	1	3	3			
60.	4,6-dinitro-o-cresol	0.010	1	3	3			
61.	N-nitrosodimethylamine	0.010	1	3	3			
62.	N-nitrosodiphenylamine	0.010	1	3	3			
63.	N-nitrosodi-n-propylamine	0.010	1	3	3			
64.	pentachlorophenol	0.010	1	3	3			
65.	phenol	0.010	1	3	3			
66.	bis (2-ethylhexyl) phthalate	0.010	1	3	3			
67.	butyl benzyl phthalate	0.010	1	3	3			
68.	di-n-butyl phthalate	0.010	1	3	3			
69.	di-n-octyl phthalate	0.010	1	3	3			
70.	diethyl phthalate	0.010	1	3	3			
71.	dimethyl phthalate	0.010	1	3	3			
72.	benzo(a)anthracene	0.010	1	3	3			
73.	benzo(a)pyrene	0.010	1	3	3			
74.	benzo(b)fluoranthene	0.010	1	3	3			
75.	benzo(k)fluoranthene	0.010	1	3	3			
76.	chrysene	0.010	1	3	3			
77.	acenaphthylene	0.010	1	3	3			
78.	anthracene (a)	0.010	1	3	3			

Table V-68 (Continued)

FREQUENCY OF OCCURRENCE OF TOXIC POLLUTANTS
DEGASSING SCRUBBER LIQUOR
RAW WASTEWATER

	Pollutant	Analytical Quantification Level (mg/l)	Number of Streams Analyzed	Number of Samples Analyzed	Number of Times Observed in Samples (mg/l) ND-0.010	0.011-0.100	0.101-1.000	1.000+
79.	benzo(ghi)perylene	0.010	1	3	3			
80.	fluorene	0.010	1	3	3			
81.	phenanthrene (a)	0.010	-	-				
82.	dibenzo(a,h)anthracene	0.010	1	3	3			
83.	indeno (1,2,3-c,d)pyrene	0.010	1	3	3			
84.	pyrene	0.010	1	3	3			
85.	tetrachloroethylene	0.010	1	3	3			
86.	toluene	0.010	1	3	3			
87.	trichloroethylene	0.010	1	3	3			
88.	vinyl chloride (chloroethylene)	0.010	1	3	3			
89.	aldrin	0.005	1	3	3			
90.	dieldrin	0.005	1	3	3			
91.	chlordane	0.005	1	3	3			
92.	4,4'-DDT	0.005	1	3	3			
93.	4,4'-DDE	0.005	1	3	3			
94.	4,4'-DDD	0.005	1	3	3			
95.	alpha-endosulfan	0.005	1	3	3			
96.	beta-endosulfan	0.005	1	3	3			
97.	endosulfan sulfate	0.005	1	3	3			
98.	endrin	0.005	1	3	3			
99.	endrin aldehyde	0.005	1	3	3			
100.	heptachlor	0.005	1	3	3			
101.	heptachlor epoxide	0.005	1	3	3			
102.	alpha-BHC	0.005	1	3	3			
103.	beta-BHC	0.005	1	3	3			
104.	gamma-BHC	0.005	1	3	3			
105.	delta-BHC	0.005	1	3	3			
106.	PCB-1242 (b)	0.005	1	3	3			
107.	PCB-1254 (b)	0.005	-	-				
108.	PCB-1221 (b)	0.005	-	-				
109.	PCB-1232 (b)	0.005	-	-				
110.	PCB-1248 (c)	0.005	1	3	3			
111.	PCB-1260 (c)	0.005	-	-				
112.	PCB-1016 (c)	0.005	-	-				
113.	toxaphene	0.005	1	3	3			
114.	antimony	0.100	1	3	3			
115.	arsenic	0.010	1	3	3			
116.	asbestos	10 MFL	0	0				

Table V-68 (Continued)

FREQUENCY OF OCCURRENCE OF TOXIC POLLUTANTS
DEGASSING SCRUBBER LIQUOR
RAW WASTEWATER

Pollutant	Analytical Quantification Level (mg/l)	Number of Streams Analyzed	Number of Samples Analyzed	Number of Times Observed in Samples (mg/l) ND-0.010	0.011-0.100	0.101-1.000	1.000+
117. beryllium	0.010	1	3	3			
118. cadmium	0.002	1	3	2	1		
119. chromium (total)	0.005	1	3		3		
120. copper	0.009	1	3		2	1	
121. cyanide (total)	0.100	1	3	3			
122. lead	0.020	1	3		2	1	
123. mercury	0.0001	1	3	3			
124. nickel	0.005	1	3	2	1		
125. selenium	0.01	1	3	3			
126. silver	0.02	1	3	3			
127. thallium	0.100	1	3	3			
128. zinc	0.050	1	3			2	1
129. 2,3,7,8-tetrachlorodibenzo-p-dioxin	0.005	0	0				

(a), (b), (c) Reported together.

Table V-69

SAMPLING DATA
DEGASSING SCRUBBER LIQUOR
RAW WASTEWATER

Pollutant	Stream Code	Sample Type	Source	Concentrations (mg/l)* Day 1	Day 2	Day 3	Average
Toxic Pollutants							
23. chloroform	R-3	3	0.04	*	<0.02	0.02	<0.01
118. cadmium	R-3	3	<0.0005	0.011	0.0014	0.0008	0.004
119. chromium	R-3	3	<0.0001	0.09	0.022	0.014	0.04
120. copper	R-3	3	0.01	0.25	0.025	0.017	0.097
122. lead	R-3	3	<0.001	0.45	0.09	0.019	0.19
124. nickel	R-3	3	<0.001	0.023	0.008	<0.001	<0.011
128. zinc	R-3	3	0.053	1.3	0.22	0.13	0.6
Nonconventional							
alkalinity	R-3	3		44	89	91	75
aluminum	R-3	3	<0.5	10	<0.5	<0.5	<4
calcium	R-3	3	60	35	51	52	46
chemical oxygen demand (COD)	R-3	3		92	31	24	49
dissolved solids	R-3	3		530	410	420	450
magnesium	R-3	3	22.1	12.3	16.7	19.6	16.2
phenols (total; by 4-AAP method)	R-3	1		0.21	0.011	0.009	0.08
sulfate	R-3	3		100	140	140	130
total organic carbon (TOC)	R-3	3		7.3	5	4.8	6
Conventional							
oil and grease	R-3	1		<5	<5	<5	<5
suspended solids	R-3	3		102	10	<2	<38
pH (standard units)	R-3	1		7.8	7.2	7.2	

Table V-70

SAMPLING DATA
ADDITIONAL WASTEWATER
RAW WASTEWATER

Pollutant	Stream Code	Sample Type	Source	Concentrations (mg/l) Day 1	Day 2	Day 3	Average
Toxic Pollutants							
1. acenaphthene	D-6	3	ND	ND	0.790	ND	0.790
	F-4	1	ND	*			*
4. benzene	D-6	1	ND	ND	*	*	*
	D-8	3	ND	ND	ND	*	*
	F-4	1	ND	0.016			0.016
	F-8	2	ND	ND	0.057	*	0.029
	J-4	1	*	*	*	*	*
	R-8	1	ND	*	ND	ND	*
	V-7	2	0.004	0.005	0.004		0.005
21. 2,4,6-trichlorophenol	B-9	3	*	*	0.015	ND	0.008
	C-2	1	ND	1.800			1.800
	D-6	3	ND	*	ND	ND	*
	F-5	3	ND	ND	*	*	*
	F-8	3	ND	ND	*	ND	*
	N-4	3	ND	ND	ND	*	*
	N-5	2	ND	*			*
23. chloroform	B-9	1	*	0.013	0.015	0.012	0.013
	C-2	1	0.055	*			*
	C-5	1	0.055	0.520			0.520
	D-6	1	0.020	0.013	0.011	0.022	0.015
	D-8	3	0.02	*	*	*	*
	F-4	1	0.012	0.042			0.042
	F-5	2	0.012	0.017	0.066	0.014	0.032
	F-8	2	0.012	0.017	0.072	0.02	0.036
	L-3	1	0.1	*	ND	ND	*
	L-4		0.1	0.080			0.080
	N-4	3	0.04	*	*	*	*
	N-5	2	0.04	0.040	0.030	0.030	0.033
	R-8	1	0.040	*	ND	0.020	0.010
24. 2-chlorophenol	C-2	1	ND	0.620			0.620
	D-6	3	ND	0.013	ND	ND	0.013
	D-8	3	ND	*	ND	ND	*
	F-5	3	ND	ND	*	0.015	0.008

Table V-70 (Continued)

SAMPLING DATA
ADDITIONAL WASTEWATER
RAW WASTEWATER

	Pollutant	Stream Code	Sample Type	Source	Concentrations (mg/l) Day 1	Day 2	Day 3	Average
34.	2,4-dimethylphenol	B-9	3	ND	ND	0.020	ND	0.020
		C-5	1	ND	*			*
		D-6	3	*	0.018	ND	ND	0.018
		D-8	3	*	0.018	ND	ND	0.018
		J-4	1	ND	0.002	ND		0.002
		L-3	2	ND	*	*	ND	*
38.	ethylbenzene	B-9	1	ND	ND	*	ND	*
		J-4	1	ND	ND	0.018	ND	0.018
		R-8	1	ND	*	ND	ND	*
39.	fluoranthene	J-5	3	ND	0.028	*	ND	0.014
44.	methylene chloride	B-9	1	*	0.017	0.012	0.016	0.015
		C-2	1	0.220	0.092			0.092
		C-5	1	0.220	2.100			2.100
		D-6	1	*	*	*	0.620	0.207
		D-8	3	*	*	0.018	0.093	0.037
		F-4	1	0.024	0.233			0.233
		F-5	2	0.024	0.051	2.000	0.103	0.718
		F-8	2	0.024	0.079	0.510		0.295
		J-4	1	ND	0.050	ND	0.014	0.032
		J-5	1	ND	*	0.250	0.012	0.087
		L-3	1	ND	*	ND	ND	*
		N-4	3	ND	*	*	ND	*
		R-7	1	*	*	*	*	*
		R-8	1	*	*	ND	0.090	0.045
		V-7	2	0.015	0.030	0.016		0.023
55.	naphthalene	D-6	3	ND	ND	ND	*	*
		L-3	2	ND	*	*	ND	*
		N-4	3	ND	ND	ND	*	*
		N-5	2	ND	0.170			0.170
58.	4-nitrophenol	J-5	3	ND	0.025	*	*	0.008
59.	2,4-dinitrophenol	B-9	3	ND	ND	ND	0.045	0.045
		C-2	1	ND	10.000			10.000
		C-5	1	ND	*			*
		F-5	3	ND	ND	ND	*	*
		J-5	3	ND	0.012	0.100	ND	0.056

Table V-70 (Continued)

SAMPLING DATA
ADDITIONAL WASTEWATER
RAW WASTEWATER

	Pollutant	Stream Code	Sample Type	Source	Concentrations (mg/l) Day 1	Day 2	Day 3	Average
62.	N-nitrosodiphenylamine	J-5	3	ND	ND	0.200	ND	0.200
64.	pentachlorophenol	C-2	1	ND	5.200			5.200
65.	phenol	B-9	3	*	0.036	*	ND	0.018
		D-6	3	ND	ND	*	*	*
		D-8	3	ND	ND	ND	*	*
		V-7	2	ND	0.260	0.140		0.200
66.	bis(2-ethylhexyl) phthalate	C-2	1	*	1.500			1.500
		D-6	1	*	350.000	640.000		495.000
		F-5	3	ND	ND	*	*	*
		J-4	1	ND		ND	*	*
		J-5	3	ND	0.072	0.038	0.016	0.042
		L-3	2	ND	0.020	0.020	0.020	0.020
		N-4	3	ND	*	*	*	*
		R-8	3	ND	ND	ND	*	*
		V-7	2	0.008	0.008	0.008		0.008
67.	butyl benzyl phthalate	J-5	3	ND	0.031	*	*	0.010
68.	di-n-butyl phthalate	B-9	3	*	*	*	ND	*
		D-6	3	*	ND	*	*	*
		D-8	3	*	ND	*	0.024	0.012
		F-4	1	*	*			*
		F-5	3	*	*	*	*	*
		F-8	3	*	*	ND	ND	*
		J-5	3	0.041	0.250	0.022	ND	0.136
70.	diethyl phthalate	J-5	3	*	0.027	ND	ND	0.027
73.	benzo(a)pyrene	J-5	3	ND	0.015	ND	ND	0.015
74.	3,4-benzo-fluoranthene (a)	J-5	3	ND	0.023	ND	ND	0.023
75.	benzo(a)-fluoranthene (a)							
76.	chrysene	D-6	3	ND	*	ND	*	*
		F-5	3	*	ND	0.014	ND	0.014
		F-8	3	*	*	ND	ND	*
		J-5	3	ND	0.030	ND	ND	0.030
		N-4	3	ND	ND	*	*	*

Table V-70 (Continued)

SAMPLING DATA
ADDITIONAL WASTEWATER
RAW WASTEWATER

Pollutant	Stream Code	Sample Type	Source	Concentrations (mg/l) Day 1	Day 2	Day 3	Average
77. acenaphthylene	F-4	1	*	*			*
	L-3	2	ND	*	*	ND	*
78. anthracene (b) 81. phenanthrene (b)	J-5	3	ND	0.067	*	*	0.022
80. fluorene	F-4	1	ND	*			*
	F-5	3	ND	*	ND	*	*
	F-8	3	ND	0.013	ND	ND	0.013
	N-5	2	ND	*			*
84. pyrene	J-5	3	*	0.048	*	ND	0.024
85. tetrachloroethylene	D-6	1	ND	*	*	*	*
	D-8	3	ND	ND	ND	*	*
	F-4	1	ND	*			*
	F-5	2	ND	ND	*	*	*
	F-8	2	ND	*	ND	*	*
	J-4	1	ND	*	ND	*	*
	V-7	2	0.002	ND	0.002		0.002
86. toluene	D-6	1	ND	ND	ND	*	*
	F-5	2	*	ND	0.036	ND	0.036
	F-8	2	*	ND	0.037	ND	0.037
	J-4	1	ND	ND	*	*	*
	L-3	2	ND	*	ND	*	*
	N-4	3	ND	ND	ND	*	*
	N-5	2	ND	*	ND	*	*
	R-8	1	ND	0.020	ND	*	0.010
87. trichloroethylene	J-5	3	ND	*	0.015	*	0.005
89. aldrin	C-2	1	ND	0.011			0.011
95. alpha-endosulfan	B-9	3	ND	ND	ND	**	**
	C-2	1	ND	0.028			0.028
97. endosulfan sulfate	B-9	3	ND	ND	**	ND	**
	C-2	1	ND	0.016			0.016
	D-8	3	ND	**			**
	F-4	1	ND	**			**
	F-5	3	ND	**			**
	F-8	3	ND	**			**

Table V-70 (Continued)

SAMPLING DATA
ADDITIONAL WASTEWATER
RAW WASTEWATER

Pollutant	Stream Code	Sample Type	Source	Concentrations (mg/l) Day 1	Day 2	Day 3	Average
102. alpha-BHC	B-9	3	ND	ND	**	ND	**
	C-2	1	**	0.018			0.018
	C-5	1	**	**			**
	D-6	3	**	**			**
105. delta-BHC	C-2	1	ND	0.011			0.011
115. arsenic	L-3	2	<0.0002	0.0004	<0.0002	<0.0002	<0.0003
	R-8	3	0.0037	0.036	0.028	0.024	0.029
	V-7	2	<0.005	<0.005	0.014		<0.010
117. beryllium	R-8	3	0.0017	0.0075	<0.0005	<0.0005	<0.0028
	V-7	2	<0.001	<0.001	0.001		<0.001
118. cadmium	B-9	3		0.006			0.006
	J-5	3	<0.010	0.180	0.180	0.180	0.180
	N-4	3	<0.0005	<0.0005	0.0013	<0.0005	<0.0008
	R-8	3	<0.0005	0.0075	0.0096	0.0096	0.0089
	V-7	2	<0.001	0.002	0.001		0.002
119. chromium	C-2	1	0.007	0.05			0.05
	J-4	1	<0.03	0.140	0.370		0.255
	J-5	3	<0.03	1,050	875	770	898
	L-1	1	<0.001	0.03			0.03
	N-4	3	<0.001	0.01	0.009	0.008	0.01
	R-8	3	<0.001	1.9	2	1.6	2
	V-7	2	<0.001	0.054	0.028		0.041
120. copper	B-9	3		0.02	0.02	0.02	0.02
	C-2	1	0.02	0.3			0.3
	D-8	3	<0.009	0.010	<0.009		<0.010
	J-4	1	<0.03	15	2.7		9
	J-5	3	<0.03	2,000	2,260	2,270	2,180
	L-2	1	0.01	0.006			0.006
	L-3	2	0.01	0.011	0.004	0.01	0.01
	N-4	3	0.008	0.017	0.018	0.015	0.017
	N-5	2	0.008	0.005			0.005
	R-8	3	0.01	4	4.7	3.6	4
	V-7	2	0.027	5.5	1.8		3.7

Table V-70 (Continued)

SAMPLING DATA
ADDITIONAL WASTEWATER
RAW WASTEWATER

Pollutant	Stream Code	Sample Type	Source	Concentrations (mg/l) Day 1	Day 2	Day 3	Average
121. cyanide	B-9	1		0.051	0.046	0.031	0.043
	D-6	1		0.001	0.006	<0.001	<0.003
	D-8	1	ND	<0.001	<0.001	0.002	<0.001
	F-8	3		0.001	<0.001	<0.001	<0.001
	J-4	1		0.004	0.002	0.003	0.003
	J-5	1	ND	0.069	0.027	0.028	0.041
	R-8	1		0.02	0.24	<0.02	<0.09
122. lead	C-2	1	0.03	0.3			0.3
	J-4	1	<0.05	0.05	1		1
	J-5	3	<0.05	4.0	2.8	2.9	3.2
	L-2	1	0.014	0.023			0.023
	L-3	2	0.014	0.009	0.006	0.004	0.006
	N-4	3	0.01	0.015	0.015	0.034	0.021
	N-5	2	0.01	0.005			0.005
	R-8	3	<0.001	0.11	1.7	1.5	1.1
	V-7	2	0.079	0.50	0.18		0.34
123. mercury	B-9	3		0.0006	0.003	0.0006	0.001
	C-5	1	0.0004	0.0003			0.0003
	D-8	3	0.0006	0.0007	0.001		0.001
	F-4	1	0.0006	0.0005			0.0005
	F-5	3	0.0006	0.0005	0.0003	<0.0001	<0.0003
	F-8	3	0.0006	0.0002	0.0001		0.0002
	L-2	1	0.0073	0.012			0.012
	L-3	2	0.0073	0.0065	0.009	0.0023	0.006
	N-4	3	0.0091	0.0093	0.011	0.007	0.009
	N-5	2	0.0091	0.0082			0.0082
124. nickel	J-4	1	<0.020	<0.02	0.07		<0.05
	J-5	3	<0.020	2.5	2.7	2.6	2.6
	R-8	3	<0.001	0.039	0.03	0.02	0.03
	V-7	2	0.009	0.048	0.022		0.035
125. selenium	V-7	2	0.020	0.017	<0.005		<0.011
128. zinc	C-2	1	0.2	0.400			0.400
	J-4	1	<0.04	0.620	4.8		2.7
	J-5	3	<0.04	1,950	2,000	2,000	1,980
	L-2	1	0.053	0.66			0.66
	N-4	3	<0.01	0.13	0.14	0.13	0.13
	N-5	2	<0.01	0.038			0.038
	R-8	3	0.053	5.5	7.1	6.8	6.5
	V-7	2	0.50	1.8	7.0		4.4

Table V-70 (Continued)

SAMPLING DATA
ADDITIONAL WASTEWATER
RAW WASTEWATER

Pollutant	Stream Code	Sample Type	Source	Concentrations (mg/l) Day 1	Day 2	Day 3	Average
Nonconventional							
chemical oxygen demand (COD)	B-9	3	82	60	67	73	67
	C-2	1	<5	19,800			19,800
	C-5	1	<5	30			30
	D-6	3		17	13	13	14
	D-8	3		71	56	51	59
	F-5	3		53	12	10	25
	F-8	3		24	14	17	18
	J-4	1	5	1,190	296		743
	J-5	3	5	289	260	238	262
	L-2	1	<5	22			22
	L-3	2	<5	28	31	42	34
	N-4	3	5	17	19	26	21
	N-5	2	5	35			35
	R-8	1		440	274	212	309
	V-17	2	<1	1,300	840		1,070
phenols (total; by 4-AAP method)	B-9	3		0.108	0.092	0.142	0.114
	C-2	1		2.77			2.77
	C-5	1		0.005			0.005
	D-6	3		0.003	0.009	0.011	0.008
	D-8	1		0.006	0.003	0.024	0.011
	F-5	3		<0.001	0.001	0.006	<0.003
	F-8	3		0.005	0.002	0.003	0.003
	J-4	1		0.012	0.015	0.006	0.011
	J-5	1		0.001	0.005		0.003
	L-2	1		0.012			0.012
	L-3	2		0.114	0.099	0.102	0.105
	L-4			0.002			0.002
	N-4	1		0.015	0.012	0.012	0.013
	N-5	1		0.025			0.025
	R-8	1		0.062	0.034	0.010	0.035
	V-7	1	62.000	0.380	0.250		0.315

Table V-70 (Continued)

SAMPLING DATA
ADDITIONAL WASTEWATER
RAW WASTEWATER

Pollutant	Stream Code	Sample Type	Source	Concentrations (mg/l) Day 1	Day 2	Day 3	Average
total organic carbon (TOC)	B-9	3	35	22	23	24	23
	C-2	1	<1	9,360			9,360
	C-5	1	<1	11			11
	D-6	3		8	20	7	12
	D-8	3		24	24	25	24
	F-4	1		2			2
	F-5	3		5	9	1	5
	F-8	3		9	4	3	5
	J-4	1		350	34		192
	J-5	3	<1	76	71	79	75
	L-2	1	2.8	5.9			5.9
	L-3	2	2.8	5.3	10	16	10
	L-4		2.8	2.40			2.40
	N-4	3	2.7	4.4	5.7	7.6	5.9
	N-5	2	2.7	16			16
	R-8	1		15	14	9.5	13
	V-7	2	4.7	900	250		580
Conventional							
oil and grease	B-9	1		17	16	25	19
	C-2	1		6,060			6,060
	C-5	1		137			137
	D-6	1		13	13	7	11
	D-8	1		360	420	340	370
	F-4	1		8			8
	F-5	2		12	8	8	9
	F-8	1		24	15	7	15
	J-4	1		223	21		122
	J-5	1		182	40	35	86
	L-2	1		12			12
	L-3	1		<5	86	<5	<32
	L-4	1		74			74
	N-4	1	<5	10	<5	9	<8
	R-8	1		43	160	35	79
	V-7	1	16	440			440

Table V-70 (Continued)

SAMPLING DATA
ADDITIONAL WASTEWATER
RAW WASTEWATER

Pollutant	Stream Code	Sample Type	Source	Concentrations (mg/l) Day 1	Day 2	Day 3	Average
suspended solids	B-9	3	138	16	18	13	16
	C-2	1	<1	2,612			2,612
	C-5	1	<1	8			8
	D-6	3		3	<1	4	<3
	D-8	3		17	17	20	18
	F-5	3		<1	5	5	<4
	F-8	3		<1	7	<1	<3
	J-4	1	14	1,540	2,670		2,110
	J-5	3	14	547	422	380	450
	L-2	1	<2	55			55
	N-4	3	<2	<2	3	4	<3
	R-8	1		470	410	360	410
	V-7	2		29	39		34
pH (standard units)	B-9	1		7.64	8.1	7.86	
	C-2	1		6.9			
	C-5	1		8.2			
	D-6	1		8.0	8.0	11.2	
	D-8	1		7.4	8.0	7.6	
	F-4	1	7.55	7.5			
	F-5	1	7.55	7.5	7.3	7.48	
	F-8	1	7.55	7.6	7.7	7.4	
	J-4	1		6.2			
	J-5	1		3.6	1.5	3.4	
	L-2	1		7.7			
	L-3	1		7.1	7.4	7.4	
	N-4	1	7.1	7.4	7.1	7.0	
	N-5	1	7.1	7.2	7.2	7.3	
	R-8	1		7.5	8.0	8.4	

(a), (b) Reported together.

Note: Only detected values are reported on this table. The additional wastewater streams sampled are B-9, C-2, C-5, D-6, D-8, F-4, F-5, F-8, J-4, J-5, L-2, L-3, L-4, N-4, N-5, R-8, and V-7.

Table V-71

SAMPLING DATA
PLANT B
TREATED WASTEWATER

Pollutant	Stream Code	Sample Type	Source	Concentrations (mg/l) Day 1	Day 2	Day 3	Average
Toxic Pollutants							
1. acenaphthene	B-7	2	ND	ND	ND	ND	
	B-8	2	ND	0.010	ND	ND	0.010
7. chlorobenzene	B-7	2	ND	ND	ND	ND	
	B-8	2	ND	0.033	ND	ND	0.033
15. 1,1,2,2-tetrachloroethane	B-7	2	ND	ND	ND	3.200	3.200
	B-8	2	ND	ND	ND	ND	
21. 2,4,6-trichlorophenol	B-7	2	*	ND	ND	1.500	1.500
	B-8	2	*	ND	ND	ND	
23. chloroform	B-7	2	*	0.017	*	1.700	0.572
	B-8	2	*	0.097	0.053	0.028	0.059
30. 1,2-trans-dichloroethylene	B-7	2	ND	0.840	0.570	0.280	0.563
	B-8	2	ND	2.300	0.480	0.110	0.963
34. 2,4-dimethlyphenol	B-7	2	ND	3.900	0.850	ND	2.375
	B-8	2	ND	3.200	1.100	ND	2.150
38. ethylbenzene	B-7	2	ND	<0.030	*	0.029	<0.020
	B-8	2	ND	0.026	*	0.021	0.016
44. methlyene chloride	B-7	2	<0.010	0.067	0.155	3.290	1.171
	B-8	2	<0.010	0.320	0.420	0.310	0.350
55. naphthalene	B-7	2	ND	ND	ND	ND	
	B-8	2	ND	0.110	0.033	0.056	0.066
59. 2,4-dinitrophenol	B-7	2	ND	ND	ND	ND	
	B-8	2	ND	ND	ND	18.000	18.000
65. phenol	B-7	2	<0.010	10.000	12.000	1.600	7.867
	B-8	2	<0.010	8.000	10.000	11.000	9.667
66. bis(2-ethylhexyl) phthalate	B-7	2	*	1.000	0.500	0.950	0.817
	B-8	2	*	0.022	*	ND	0.011
68. di-n-butyl phthalate	B-7	2	*	0.280	ND	ND	0.280
	B-8	2	*	0.012	0.012	0.015	0.013

Table V-71 (Continued)

SAMPLING DATA
PLANT B
TREATED WASTEWATER

Pollutant	Stream Code	Sample Type	Source	Concentrations (mg/l) Day 1	Day 2	Day 3	Average
70. diethyl phthalate	B-7	2	*	0.330	ND	ND	0.330
	B-8	2	*	0.011	0.015	ND	0.013
85. tetrachloroethylene	B-7	2	ND	0.052	0.040	7.700	2.597
	B-8	2	ND	0.011	0.065	0.300	0.125
86. toluene	B-7	2	ND	*	*	0.038	0.013
	B-8	2	ND	ND	*	*	*
87. trichloroethylene	B-7	2	ND	0.021	0.064	ND	0.043
	B-8	2	ND	ND	0.042	ND	0.042
89. aldrin	B-7	2	ND	**	**	0.010	0.003
	B-8	2	ND	ND	ND	ND	
93. 4,4'-DDE	B-7	2	**	0.006	ND	0.015	0.011
	B-8	2	**	**	ND	**	**
95. alpha-endosulfan	B-7	2	ND	**	0.0055	**	0.0018
	B-8	2	ND	ND	ND	ND	
97. endosulfan sulfate	B-7	2	ND	ND	0.0065	0.0067	0.0066
	B-8	2	ND	ND	ND	ND	
99. endrin aldehyde	B-7	2	ND	ND	**	0.0089	0.0045
	B-8	2	ND	ND	ND	ND	
101. heptachlor epoxide	B-7	2	**	0.015	ND	ND	0.015
	B-8	2	**	**	ND	ND	**
102. alpha-BHC	B-7	2	ND	0.006	**	0.024	0.010
	B-8	2	ND	ND	**	**	**
103. beta-BHC	B-7	2	**	ND	0.014	ND	0.014
	B-8	2	**	ND	ND	**	**
105. delta-BHC	B-7	2	0.00001	0.015	ND	ND	0.015
	B-8	2	0.00001	**	ND	ND	**
106. PCB-1242 (a) 107. PCB-1254 (a) 108. PCB-1221 (a)	B-7	2	**	0.200	0.085	0.039	0.108
	B-8	2	**	**	**	**	**

Table V-71 (Continued)

SAMPLING DATA
PLANT B
TREATED WASTEWATER

Pollutant	Stream Code	Sample Type	Source	Concentrations (mg/l) Day 1	Day 2	Day 3	Average
109. PCB-1232 (b)	B-7	2	**	0.250	0.160	0.660	0.357
110. PCB-1248 (b)	B-8	2	**	**	**	**	**
111. PCB-1260 (b)							
112. PCB-1016 (b)							
115. arsenic	B-7	2	<0.01	<0.01	<0.01	<0.01	<0.01
	B-8	2	<0.01	<0.01	<0.01	<0.01	<0.01
	B-10	1	<0.01	0.400			0.400
118. cadmium	B-8	2	ND	<0.002	<0.002	<0.002	<0.002
	B-10	1	ND	0.400			0.400
119. chromium	B-8	2	ND	0.100	0.100	<0.005	<0.068
	B-10	1	ND	70			70
120. copper	B-8	2	ND	0.01	<0.009	<0.009	<0.01
	B-10	1	ND	50			50
122. lead	B-8	2	ND	0.02	0.03	<0.02	<0.02
	B-10	1	ND	20			20
123. mercury	B-8	2	ND	0.003	0.001	0.0002	0.001
124. nickel	B-8	2	ND	<0.005	0.02	<0.005	<0.01
	B-10	1	ND	20			20
128. zinc	B-8	2	ND	<0.05	<0.05	<0.05	<0.05
	B-10	1	ND	50			50
Nonconventional							
chemical oxygen demand (COD)	B-7	2	82	7,980	5,850	78,320	30,720
	B-8	2	82	2,700	2,540	2,070	2,440
phenols (total; by 4-AAP method)	B-7	2		16.7	21.7	27.1	21.8
	B-8	2			17.5	13.5	15.5
total organic carbon (TOC)	B-7	2	35	4,960	4,050	26,270	11,760
	B-8	2	35	1,250	971	839	1,020

Table V-71 (Continued)

SAMPLING DATA
PLANT B
TREATED WASTEWATER

Pollutant	Stream Code	Sample Type	Source	Concentrations (mg/l) Day 1	Day 2	Day 3	Average
Conventional							
oil and grease	B-7	1		95	1,540	38,180	13,270
	B-8	1		22	52	267	114
suspended solids	B-7	2	138	1,262	791	5,676	2,576
	B-8	2	138	26	19	13	19
pH (standard units)	B-7	1		8.04	7.6	8.1	
	B-8	1		7.85	7.6	8.2	

(a), (b) Reported together.

Table V-72

SAMPLING DATA
PLANT C
TREATED WASTEWATER

Pollutant	Stream Code	Sample Type	Source	Concentrations (mg/l) Day 1	Day 2	Day 3	Average
Toxic Pollutants							
23. chloroform	C-9	1	0.055	0.066			0.066
44. methylene chloride	C-9	1	0.220	0.630			0.630
59. 2,4-dinitrophenol	C-9	1	ND	0.800			0.800
65. phenol	C-9	1	ND	0.820			0.820
66. bis(2-ethylhexyl) phthalate	C-9	1	*	0.130			0.130
102. alpha-BHC	C-9	1	**	0.00012			0.00012
106. PCB-1242 (a) 107. PCB-1254 (a) 108. PCB-1221 (a)	C-9	1	**	0.006			0.006
109. PCB-1232 (b) 110. PCB-1248 (b) 111. PCB-1260 (b) 112. PCB-1016 (b)	C-9	1	**	0.008			0.008
119. chromium	C-9	1	0.007	0.009			0.009
120. copper	C-9	1	0.02	0.02			0.02
123. mercury	C-9	1	0.0004	0.002			0.002
Nonconventional							
chemical oxygen demand (COD)	C-9	1	<5	2,520			2,520
phenols (total; by 4-AAP method)	C-9	1		1.65			1.65
total organic carbon (TOC)	C-9	1	<1	850			850
Conventional							
oil and grease	C-9	1		98			98
total suspended solids	C-9	1	<1	46			46

(a), (b) Reported together.

Table V-73

SAMPLING DATA
PLANT D
TREATED WASTEWATER

Pollutant	Stream Code	Sample Type	Source	Concentrations (mg/l) Day 1	Day 2	Day 3	Average
Toxic Pollutants							
1. acenaphthene	D-4	3	ND	*	ND	ND	*
	D-9[a]	6	ND	0.030			0.030
	D-14	3	ND	ND	ND	ND	
	D-15	6	ND	ND			
	D-16[b]	3	ND	ND	*	ND	*
4. benzene	D-4	1	ND	*	ND	ND	*
	D-9	1	ND	ND	ND	*	*
	D-14	1	ND	*	*	0.016	0.005
	D-15	1	ND	ND		*	*
	D-16	1	ND	ND	ND	*	*
21. 2,4,6-trichlorophenol	D-4	3	ND	ND.	ND	ND	
	D-9	6	ND	0.014			0.014
	D-14	3	ND	*	*	*	*
	D-15	6	ND	ND			
	D-16	3	ND	ND	ND	*	*
23. chloroform	D-4	1	0.020	0.010	*	0.500	0.170
	D-9	1	0.020	*	0.011	*	0.004
	D-14	1	0.020	0.011	0.037	0.028	0.025
	D-15	1	0.020	0.012	0.015		0.014
	D-16	1	0.020	*	*	*	*
30. 1,2-trans-dichloroethylene	D-4	1	ND				
	D-9	1	ND	ND	ND	*	*
	D-14	1	ND	ND	*	*	*
	D-15	1	ND	ND	ND		
	D-16	1	ND	ND	ND	ND	
44. methylene chloride	D-4	1	*	0.010	0.010	0.450	0.157
	D-9	1	*	*	0.048	0.150	0.066
	D-14	1	*	ND	0.780	1.100	0.940
	D-15	1	*	0.150	0.110		0.130
	D-16	1	*	0.140	*	0.440	0.193
54. isophorone	D-4	3	ND	0.010	ND	ND	0.010
	D-9	6	ND	ND			
	D-14	3	ND	ND	ND	0.014	0.014
	D-15	6	ND	ND			
	D-16	3	ND	0.030	ND	ND	0.030

Table V-73 (Continued)

SAMPLING DATA
PLANT D
TREATED WASTEWATER

Pollutant	Stream Code	Sample Type	Source	Concentrations (mg/l) Day 1	Day 2	Day 3	Average
64. pentachlorophenol	D-4	3	0.014	ND	*	*	*
	D-9	6	0.014	0. 13			0.013
	D-14	3	0.014	*	*	ND	*
	D-15	6	0.014	ND			
	D-16	3	0.014	ND	*	ND	*
65. phenol	D-4	3	ND	0.042	0.027	*	0.023
	D-9	6	ND	ND			
	D-14	3	ND	*	*	*	*
	D-15	6	ND	ND			
	D-16	3	ND	0.040	*	0.015	0.018
66. bis(2-ethylhexyl) phthalate	D-4	3	*	0.023	*	*	0.008
	D-9	6	*	0.057			0.057
	D-14	3	*	*	*	*	*
	D-15	6	*	0.130			0.130
	D-16	3	*	0.150	0.010	*	0.053
67. butyl benzyl phthalate	D-4	3	ND	*	ND	*	*
	D-9	6	ND	ND			
	D-14	3	ND	*	*	*	*
	D-15	6	ND	0.049			0.049
	D-16	3	ND	0.270	*	*	0.090
68. di-n-butyl phthalate	D-4	3	*	0.017	*	*	0.006
	D-9	6	*	ND			
	D-14	3	*	*	*	*	*
	D-15	6	*	0.022			0.022
	D-16	3	*	0.016	*	*	0.005
69. di-n-octyl phthalate	D-4	3	ND	ND	ND	ND	
	D-9	6	ND	ND			
	D-14	3	ND	ND	ND	ND	
	D-15	6	ND	0.026			0.026
	D-16	3	ND	0.140	ND	ND	0.140
71. dimethyl phthalate	D-4	3	ND	ND	*	*	*
	D-9	6	ND	ND			
	D-14	3	ND	0.026	0.043	*	0.023
	D-15	6	ND	ND			
	D-16	3	ND	*	*	*	*

Table V-73 (Continued)

SAMPLING DATA
PLANT D
TREATED WASTEWATER

	Pollutant	Stream Code	Sample Type	Source	Concentrations (mg/l) Day 1	Day 2	Day 3	Average
87.	trichloroethylene	D-4	1	*	0.024	0.073	0.053	0.050
		D-9	1	*	ND			
		D-14	1	*	0.025	0.039	0.033	0.032
		D-15	1	*	0.150	*		0.075
		D-16	1	*	0.080	0.045	0.020	0.048
115.	arsenic	D-4	3	<0.010	<0.001	<0.001	<0.001	<0.001
		D-9	6	<0.010	0.040			0.040
		D-13*	1	<0.010	0.750			0.750
		D-14	3	<0.010	<0.010	<0.010	<0.010	<0.010
		D-15	6	<0.010	ND			
		D-16	3	<0.010	<0.010	<0.010	<0.010	<0.010
119.	chromium	D-4	3	<0.005	1.000	0.800	1.000	0.933
		D-9	6	<0.005	ND			
		D-13*	1	<0.005	ND			
		D-14	3	<0.005		0.020	0.040	0.030
		D-15	6	<0.005	ND			
		D-16	3	<0.005	2.000	0.700	2.000	1.567
120.	copper	D-4	3	<0.009	0.010	0.010	0.010	0.010
		D-9	6	<0.009	ND			
		D-13*	1	<0.009	ND			
		D-14	3	<0.009		<0.009	0.010	<0.010
		D-15	6	<0.009	ND			
		D-16	3	<0.009	0.020	0.010	0.010	0.013
121.	cyanide	D-4	1	ND	0.005	0.001	0.001	0.002
		D-9	6	ND	0.006			0.006
		D-13*	1	ND	0.004			0.004
		D-14	1	ND	0.015	<0.001	0.029	<0.015
		D-15	6	ND	0.002			0.002
		D-16	1	ND	0.004	0.002	0.001	0.002
122.	lead	D-4	3	<0.020	<0.020	<0.020	0.040	<0.027
		D-9	6	<0.020	ND			
		D-13*	1	<0.020				
		D-14	3	<0.020		<0.020	<0.020	<0.020
		D-15	6	<0.020	ND			
		D-16	3	<0.020	0.030	<0.020	0.020	<0.023

Table V-73 (Continued)

SAMPLING DATA
PLANT D
TREATED WASTEWATER

Pollutant	Stream Code	Sample Type	Source	Concentrations (mg/l) Day 1	Day 2	Day 3	Average
123. mercury	D-4	3	0.0006	0.0006	<0.010	0.0003	0.004
	D-9	6	0.0006	ND			
	D-13*	1	0.0006	ND			
	D-14	3	0.0006		<0.0001	<0.0007	<0.0004
	D-15	6	0.0006	ND			
	D-16	3	0.0006	0.060	<0.0001	0.0005	0.020
128. zinc	D-4	3	<0.050	0.090	0.060	0.060	0.070
	D-9	6	<0.050	ND			
	D-13*	1	<0.050	ND			
	D-14	3	<0.050		<0.050	<0.050	<0.050
	D-15	1	<0.050	ND			
	D-16	3	<0.050	0.100	<0.050	0.070	<0.073
Nonconventional							
alkalinity	D-15	6		0.380			0.380
aluminum	D-4	3	0.200	4.0	2.0	2.0	2.7
	D-9	6	0.200	170.0			170.0
	D-13*	1	0.200	ND			
	D-14	3	0.200		0.100	<0.090	<0.095
	D-15	6	0.200	8.3			8.3
	D-16	3	0.200	6.0	4.0	4.0	4.7
calcium	D-4	3	38	53.0	56.0	56.0	55.0
	D-9	6	38	7.3			7.3
	D-14	3	38	*	52.0	46.0	32.7
	D-15	6	38	50.0			50.0
	D-16	3	38	64.0	110.0	89.0	87.7
chemical oxygen demand (COD)	D-4	3		73	44	52	56
	D-9	6		59			59
	D-14	3		32	22	28	27
	D-15	6		903			903
	D-16	3		79	90	86	85
magnesium	D-4	3	12	16.0	14.0	14.0	14.7
	D-9	6	12	21.0			21.0
	D-14	3	12	13.0	13.0	13.0	13.0
	D-15	6	12	32.0			32.0
	D-16	3	12	24.0	59.0	37.0	40.0

Table V-73 (Continued)

SAMPLING DATA
PLANT D
TREATED WASTEWATER

Pollutant	Stream Code	Sample Type	Source	Concentrations (mg/l) Day 1	Day 2	Day 3	Average
phenols (total; by 4-AAP method)	D-4	1		0.414	0.072	0.110	0.199
	D-9	6		<0.001			<0.001
	D-14	1		0.547	0.001	0.477	0.347
	D-15	6		15.6			15.6
	D-16	1		0.015	1.34	0.01	0.46
sulfate	D-9	6		3.366			3.366
	D-15	6		1.284			1.284
total organic carbon (TOC)	D-4	3		29	4	21	18
	D-9	6		31			31
	D-14	3		12	3	17	11
	D-15	6		381			381
	D-16	3		36	66	48	50
Conventional							
oil and grease	D-4	1		15	21	5	14
	D-9	1		16			16
	D-14	1		14	10	7	10
	D-15	1		36			36
	D-16	1		66	72	54	64
suspended solids	D-4	3		43	44	51	46
	D-9	6		13			13
	D-14	3		3	<1	12	<5
	D-15	6		93			93
	D-16	3		119	1,100	215	478
pH (standard units)	D-4	3		6.8	8.4	8.2	
	D-9	6		2.1	2.4	2.8	
	D-14	3		7.2	7.8	7.1	
	D-15	6		6.7	6.5		
	D-16	3		5.9	7.4	7.8	

*Stream D-13 was analyzed for metals only.

[a]Raw waste is from nonscope operations.

[b]Influent to central treatment system stream--some contributing streams are partially treated.

Table V-74

SAMPLING DATA
PLANT E
TREATED WASTEWATER

Pollutant	Stream Code	Sample Type	Source	Concentrations (mg/l) Day 1	Day 2	Day 3	Average
Toxic Pollutants							
1. acenaphthene	E-6[a]	3	*	ND	ND	ND	
	E-8	2	*	0.055			0.055
	E-9	2	*	*			*
	E-10	3	*	250.000	ND	ND	250.000
	E-11	3	*	ND	ND	ND	
4. benzene	E-6	1	ND	ND	0.011	*	0.006
	E-8	1	ND	*			*
	E-9	1	ND	*			*
	E-10	1	ND	ND	0.011	*	0.006
	E-11	1	ND	ND	*	ND	*
5. benzidine	E-6	3	ND	ND	ND	ND	
	E-8	2	ND	ND			
	E-9	2	ND	ND			
	E-10	3	ND	ND	0.026	0.016	0.021
	E-11	3	ND	ND	0.016	0.033	0.025
7. chlorobenzene	E-6	3	ND	ND	ND	ND	
	E-8	2	ND	*			*
	E-9	2	ND	ND			
	E-10	3	ND	ND	ND	ND	
	E-11	3	ND	ND	*	*	*
13. 1,1-dichloroethane	E-6	3	ND	ND	ND	ND	
	E-8	2	ND	0.058			0.058
	E-9	2	ND	0.020			0.020
	E-10	3	ND	ND	ND	ND	
	E-11	3	ND	ND	ND	ND	
21. 2,4,6-trichlorophenol	E-6	3	*	ND	*	ND	*
	E-8	2	*	ND			
	E-9	2	*	ND			
	E-10	3	*	0.013	*	*	0.004
	E-11	3	*	ND	*	ND	*
22. p-chloro-m-cresol	E-6	3	ND	ND	*	ND	*
	E-8	2	ND	ND			
	E-9	2	ND	ND			
	E-10	3	ND	*	ND	*	*
	E-11	3	ND	0.013	*	ND	0.007

Table V-74 (Continued)

SAMPLING DATA
PLANT E
TREATED WASTEWATER

Pollutant	Stream Code	Sample Type	Source	Concentrations (mg/l) Day 1	Day 2	Day 3	Average
23. chloroform	E-6	1	*	0.010	0.010	*	0.007
	E-8	1	*	0.032			0.032
	E-9	1	*	0.020			0.020
	E-10	1	*	0.035	0.023	0.045	0.034
	E-11	1	*	0.012	*	*	*
30. 1,2-trans-dichloroethylene	E-6	3	ND	ND	ND	ND	
	E-8	2	ND	0.850			0.850
	E-9	2	ND	0.360			0.360
	E-10	3	ND	ND	ND	ND	
	E-11	3	ND	ND	ND	ND	
35. 2,4-dinitrotoluene	E-6	3	ND	ND	ND	ND	
	E-8	2	ND	ND			
	E-9	2	ND	ND			
	E-10	3	ND	ND	0.021	ND	0.021
	E-11	3	ND	ND	ND	0.060	0.060
36. 2,6-dinitrotoluene	E-6	3	ND	ND	ND	ND	
	E-8	2	ND	ND			
	E-9	2	ND	ND			
	E-10	3	ND	ND	0.044	ND	0.044
	E-11	3	ND	ND	ND	*	*
38. ethylbenzene	E-6	1	ND	ND	ND	ND	
	E-8	1	ND	0.013			0.013
	E-9	1	ND	*			*
	E-10	1	ND	ND	ND	ND	
	E-11	1	ND	*	ND	ND	*
44. methylene chloride	E-6	1	0.017	*	0.140	0.130	0.090
	E-8	1	0.017	0.130			0.130
	E-9	1	0.017	1.700			1.700
	E-10	1	0.017	0.052	0.474	0.130	0.219
	E-11	2	0.017	0.089	0.076	0.100	0.088
54. isophorone	E-6	3	ND	ND	ND	ND	
	E-8	2	ND	ND			
	E-9	2	ND	0.280			0.280
	E-10	3	ND	ND	0.170	ND	0.170
	E-11	3	ND	ND	ND	0.222	0.222

Table V-74 (Continued)

SAMPLING DATA
PLANT E
TREATED WASTEWATER

Pollutant	Stream Code	Sample Type	Source	Concentrations (mg/l) Day 1	Day 2	Day 3	Average
55. naphthalene	E-6	3	ND	ND	*	ND	*
	E-8	2	ND	0.017			0.017
	E-9	2	ND	ND			
	E-10	3	ND	ND	ND	ND	
	E-11	3	ND	ND	ND	*	*
56. nitrobenzene	E-6	3	ND	ND	ND	ND	
	E-8	2	ND	ND			
	E-9	2	ND	ND			
	E-10	3	ND	ND	0.025	ND	0.025
	E-11	3	ND	ND	ND	ND	
59. 2,4-dinitrophenol	E-6	3	ND	ND	ND	ND	
	E-8	2	ND	ND			
	E-9	2	ND	ND			
	E-10	3	ND	0.032	ND	*	0.016
	E-11	3	ND	0.011	*	ND	0.006
62. N-nitrosodiphenylamine	E-6	3	ND	ND	ND	ND	
	E-8	2	ND	ND			
	E-9	2	ND	ND			
	E-10	3	ND	ND	0.083	ND	0.083
	E-11	3	ND	ND	ND	0.091	0.091
65. phenol	E-6	3	*	ND	ND	*	*
	E-8	2	*	ND			
	E-9	2	*	ND			
	E-10	3	*	*	ND	*	*
	E-11	3	*	ND	*	ND	*
66. bis(2-ethylhexyl) phthalate	E-6	3	*	*	*	0.019	0.006
	E-8	2	*	0.390			0.390
	E-9	2	*	0.044			0.044
	E-10	3	*	0.056	ND	0.013	0.035
	E-11	3	*	*	*	ND	*
68. di-n-butyl phthalate	E-6	3	*	*	ND	ND	*
	E-8	2	*	0.390			0.390
	E-9	2	*	0.049			0.049
	E-10	3	*	ND	*	ND	*
	E-11	3	*	0.019	*	*	0.006

Table V-74 (Continued)

SAMPLING DATA
PLANT E
TREATED WASTEWATER

Pollutant	Stream Code	Sample Type	Source	Concentrations (mg/l) Day 1	Day 2	Day 3	Average
70. diethyl phthalate	E-6	3	*	*	0.023	ND	0.012
	E-8	2	*	0.720			0.720
	E-9	2	*	0.065			0.065
	E-10	3	*	0.056	ND	ND	0.056
	E-11	3	*	ND	ND	ND	
71. dimethyl phthalate	E-6	3	*	ND	ND	ND	
	E-8	2	*	ND			
	E-9	2	*	ND			
	E-10	3	*	ND	0.010	ND	0.010
	E-11	3	*	ND	ND	ND	
72. benzo(a)anthracene	E-6	3	*	ND	ND	ND	
	E-8	2	*	ND			
	E-9	2	*	ND			
	E-10	3	*	ND	*	ND	*
	E-11	3	*	ND	ND	0.011	0.011
78. anthracene (a)	E-6	3	ND	ND	ND	ND	
81. phenanthrene (a)	E-8	2	ND	ND			
	E-9	2	ND	ND			
	E-10	3	ND	ND	0.119	ND	0.119
	E-11	3	ND	ND	*	0.100	0.050
80. fluorene	E-6	3	*	ND	*	ND	*
	E-8	2	*	ND			
	E-9	2	*	ND			
	E-10	3	*	ND	0.050	ND	0.050
	E-11	3	*	ND	ND	0.035	0.035
84. pyrene	E-6	3	ND	ND	*	ND	*
	E-8	2	ND	ND			
	E-9	2	ND	ND			
	E-10	3	ND	ND	ND	ND	
	E-11	3	ND	ND	*	*	*
85. tetrachloroethylene	E-6	1	ND	ND	*	ND	*
	E-8	1	ND	0.021			0.021
	E-9	1	ND	0.014			0.014
	E-10	1	ND	*	*	*	*
	E-11	1	ND	0.011	*	*	0.004

Table V-74 (Continued)

SAMPLING DATA
PLANT E
TREATED WASTEWATER

Pollutant	Stream Code	Sample Type	Source	Concentrations (mg/l) Day 1	Day 2	Day 3	Average
86. toluene	E-6	1	ND	ND	ND	ND	
	E-8	1	ND	0.013			0.013
	E-9	1	ND	*			*
	E-10	1	ND	0.031	*	ND	0.016
	E-11	1	ND	*	ND	ND	*
87. trichloroethylene	E-6	3	ND	ND	ND	ND	
	E-8	2	ND	0.012			0.012
	E-9	2	ND	*			*
	E-10	3	ND	ND	*	*	*
	E-11	3	ND	ND	*	*	*
91. chlordane	E-6	3	**	**			**
	E-8	2	**	ND			
	E-9	2	**	**			**
	E-10	3	**	**			**
	E-11	3	**	**			**
98. endrin	E-6	3	ND	ND			
	E-8	2	ND	**			**
	E-9	2	ND	ND			
	E-10	3	ND	**			**
	E-11	3	ND	**			**
106. PCB-1242 (b)	E-6	3	**	**			**
107. PCB-1254 (b)	E-8	2	**	0.016			0.016
108. PCB-1221 (b)	E-9	2	**	**			**
	E-10	3	**	0.006			0.006
	E-11	3	**	**			**
109. PCB-1232 (c)	E-6	3	**	**			**
110. PCB-1248 (c)	E-8	2	**	0.027			0.027
111. PCB-1260 (c)	E-9	2	**	**			**
112. PCB-1016 (c)	E-10	3	**	0.0053			0.0053
	E-11	3	**	**			**
118. cadmium	E-6	3	<0.002	<0.002	<0.002	<0.002	<0.002
	E-8	2	<0.002	<0.002			<0.002
	E-9	2	<0.002	0.005			0.005
	E-10	3	<0.002	<0.002	<0.002	<0.002	<0.002
	E-11	3	<0.002	<0.002	<0.002	<0.002	<0.002

Table V-74 (Continued)

SAMPLING DATA
PLANT E
TREATED WASTEWATER

Pollutant	Stream Code	Sample Type	Source	Concentrations (mg/l) Day 1	Day 2	Day 3	Average
119. chromium	E-6	3	<0.005	0.070	0.060	0.040	0.057
	E-8	2	<0.005	0.010			0.010
	E-9	2	<0.005	0.020			0.020
	E-10	3	<0.005	0.090	0.060	0.020	0.057
	E-11	3	<0.005	<0.005	<0.005	<0.005	<0.005
120. copper	E-6	3	0.009	<0.009	<0.009	<0.009	<0.009
	E-8	2	0.009	0.050			0.050
	E-9	2	0.009	<0.009			<0.009
	E-10	3	0.009	0.200	0.300	0.060	0.187
	E-11	3	0.009	<0.009	0.100	<0.009	<0.039
121. cyanide	E-6	1	ND	0.002	<0.001	<0.001	<0.001
	E-8	2	ND	0.006			0.006
	E-9	2	ND	0.003			0.003
	E-10	1	ND	0.034	0.006	0.006	0.015
	E-11	1	ND	0.004	0.003	0.003	0.003
122. lead	E-6	3	<0.020	<0.020	<0.020	<0.020	<0.020
	E-8	2	<0.020	0.050			0.050
	E-9	2	<0.020	0.030			0.030
	E-10	3	<0.020	0.020	<0.020	<0.020	<0.020
	E-11	3	<0.020	<0.020	<0.020	<0.020	<0.020
123. mercury	E-6	3	0.0004	0.0009	0.0004	0.0011	0.0008
	E-8	2	0.0004	<0.010			<0.010
	E-9	2	0.0004	0.0006			0.0006
	E-10	3	0.0004	0.0006	0.0022	0.0005	0.0011
	E-11	3	0.0004	0.0006	0.0008	0.0006	0.0007
124. nickel	E-6	3	<0.005	0.020	0.006	<0.005	<0.010
	E-8	2	<0.005	0.010			0.010
	E-9	2	<0.005	0.040			0.040
	E-10	3	<0.005	<0.005	<0.005	<0.005	<0.005
	E-11	3	<0.005	<0.005	<0.005	<0.005	<0.005
128. zinc	E-6	3	<0.050	<0.050	<0.050	<0.050	<0.050
	E-8	2	<0.050	0.100			0.100
	E-9	2	<0.050	0.200			0.200
	E-10	3	<0.050	0.200	0.200	0.100	0.167
	E-11	3	<0.050	<0.050	<0.050	<0.050	<0.050

Table V-74 (Continued)

SAMPLING DATA
PLANT E
TREATED WASTEWATER

Pollutant	Stream Code	Sample Type	Source	Concentrations (mg/l) Day 1	Day 2	Day 3	Average
Nonconventional							
alkalinity	E-6	3	ND	26	28	76	43
	E-8	2	ND	240.0			240.0
	E-9	2	ND	12.0			12.0
	E-10	3	ND	ND	ND	ND	
	E-11	3	ND	ND	ND	ND	
aluminum	E-6	3	<0.090	<0.145	<0.195	<0.195	<0.178
	E-8	2	<0.090	4.7			4.7
	E-9	2	<0.090	7.6			7.6
	E-10	3	<0.090	20	10	6	12
	E-11	3	<0.090	0.100	<0.090	<0.090	<0.093
calcium	E-6	3	68	320.0	370.0	320.0	336.7
	E-8	2	68	28.0			28.0
	E-9	2	68	43.0			43.0
	E-10	3	68	50	48	47	48
	E-11	3	68	51	51	50	51
chemical oxygen demand (COD)	E-6	3	<0.005	68	17	22	36
	E-8	2	<0.005	9,890			9,890
	E-9	2	<0.005	828			828
	E-10	3	<0.005	270	346	395	337
	E-11	3	<0.005	84	103	93	93
magnesium	E-6	3	3.8	22.0	23.0	18.0	21.0
	E-8	2	3.8	9.7			9.7
	E-9	2	3.8	14.0			14.0
	E-10	3	3.8	5.8	6.1	4.9	5.6
	E-11	3	3.8	5.2	5.4	5.4	5.3
phenols (total; by 4-AAP method)	E-6	1		0.008	0.007	0.010	0.008
	E-8	2		0.217			0.217
	E-9	2		0.213			0.213
	E-10	1		0.009		0.006	0.008
	E-11	1		0.011		0.008	0.010

Table V-74 (Continued,

SAMPLING DATA
PLANT E
TREATED WASTEWATER

Pollutant	Stream Code	Sample Type	Source	Concentrations (mg/l) Day 1	Day 2	Day 3	Average
sulfate	E-6	3	ND	790	848	788	809
	E-8	2	ND	<0.025			<0.025
	E-9	2	ND				
	E-10	3	ND	ND	ND	ND	
	E-11	3	ND	ND	ND	ND	
total organic carbon (TOC)	E-6	3	0.001	22	8	7	12
	E-8	2	0.001	3,130			3,130
	E-9	2	0.001	262			262
	E-10	3	0.001	166	180	152	166
	E-11	3	0.001	27	34	27	29
Conventional							
oil and grease	E-6	1		9	20	18	16
	E-8	1		3,320			3,320
	E-9	1		42			42
	E-10	1		189	227		208
	E-11	1		35	31	15	27
suspended solids	E-6	3	<0.001	10	1	1	4
	E-8	2	<0.001	137.0			137.0
	E-9	2	<0.001	12			12
	E-10	3	<0.001	121	140	89	117
	E-11	3	<0.001	24	24	24	24
pH (standard units)	E-6	1		6.7	7.5	7.0	
	E-8	1		5.5			
	E-9	1		4.8			
	E-10	1			6.2	6.5	
	E-11	1			7.0	7.3	

(a), (b), (c) Reported together.

[a]Raw waste is from nonscope operations.

Table V-75

SAMPLING DATA
PLANT H
TREATED WASTEWATER

Pollutant	Stream Code	Sample Type	Source	Concentrations (mg/l) Day 1	Day 2	Day 3	Average
Toxic Pollutants							
4. benzene	H-3	1	0.023	*	ND	*	*
23. chloroform	H-3	1	0.066	0.023	0.028	0.017	0.023
44. methylene chloride	H-3	1	1.100	0.205	0.031	0.034	0.090
66. bis(2-ethylhexyl) phthalate	H-3	3	ND	*	ND	ND	*
68. di-n-butyl phthalate	H-3	3	*	0.011	0.022	*	0.011
85. tetrachloroethylene	H-3	1	*	*	*	*	*
86. toluene	H-3	1	*	*	ND	ND	*
93. 4,4'-DDE	H-3	3	ND	**			**
106. PCB-1242 (a) 107. PCB-1254 (a) 108. PB-1221 (a)	H-3	3	**	**			**
109. PCB-1232 (b) 110. PCB-1248 (b) 111. PCB-1260 (b) 112. PCB-1016 (b)	H-3	3	**	**			**
121. cyanide	H-3	1		0.025	0.005	0.011	0.014
122. lead	H-3	3	<0.02	0.07	0.05	0.03	0.05
123. mercury	H-3	3	0.0004	0.0003	0.0003	0.0003	0.0003
128. zinc	H-3	3	0.1	0.2	0.2	0.1	0.2
Nonconventional							
chemical oxygen demand (COD)	H-3	3		222	179	96	166
phenols (total; by 4-AAP method)	H-3	1		0.014	0.01	0.017	0.01
total organic carbon (TOC)	H-3	3		47	44	25	39

Table V-75 (Continued)

SAMPLING DATA
PLANT H
TREATED WASTEWATER

Pollutant	Stream Code	Sample Type	Source	Concentrations (mg/l) Day 1	Day 2	Day 3	Average
Conventional							
oil and grease	H-3	1		131	59	168	119
	H-7[a]	1		69			69
	H-8[a]	1		154			154
suspended solids	H-3	3		54	72	38	55
pH (standard units)	H-3	1		7.4	7		
	H-7	1		7.3			
	H-8	1		7.3			

(a), (b) Reported together.

[a]Oil samples analyzed for oil and grease only.

Table V-76

SAMPLING DATA
PLANT J
TREATED WASTEWATER

Pollutant	Stream Code	Sample Type	Source	Concentrations (mg/l) Day 1	Day 2	Day 3	Average
Toxic Pollutants							
44. methylene chloride	J-6	1	ND	*	0.021		0.011
58. 4-nitrophenol	J-6	1	ND	0.045	ND	0.018	0.032
66. bis(2-ethylhexyl) phthalate	J-6	1	ND	0.140	0.160	0.024	0.108
68. di-n-butyl phthalate	J-6	1	0.041	0.031	0.018	ND	0.025
69. di-n-octyl phthalate	J-6	1	ND	0.019	0.016	ND	0.018
78. anthracene (a) 81. phenanthrene (a)	J-6	1	ND	*	ND	ND	*
87. trichloroethylene	J-6	1	ND	*	*		*
115. arsenic	J-6	1	<0.010	<0.010	<0.010	0.010	<0.010
118. cadmium	J-6	1	<0.010	0.180	0.190	0.190	0.187
119. chromium	J-6	1	<0.030	870	735	770	792
120. copper	J-6	1	0.030	2,000	2,530	2,190	2,240
121. cyanide	J-6	1	ND	0.018	0.034	0.023	0.025
122. lead	J-6	1	<0.050	0.650	1.200	1.200	1.017
123. mercury	J-6	1	<0.0004	<0.0002	0.0002	<0.0002	<0.0002
124. nickel	J-6	1	<0.020	2.100	2.500	2.600	2.400
128. zinc	J-6	1	0.040	1,950	1,200	2,200	1,780
Nonconventional							
chemical oxygen demand (COD)	J-6	1	5	297	289	255	280
phenols (total; by 4-AAP method)	J-6	1		0.001	0.004	0.002	0.002
total organic carbon (TOC)	J-6	1	<1	77	66	79	74

Table V-76 (Continued)

SAMPLING DATA
PLANT J
TREATED WASTEWATER

Pollutant	Stream Code	Sample Type	Source	Concentrations (mg/l) Day 1	Day 2	Day 3	Average
Conventional							
150. oil and grease	J-6	1		18	15	13	15
152. suspended solids	J-6	1	14	354	1,070	704	709
159. pH (standard units)	J-6	1		3.6	3.5	4.1	

(a) Reported together.

Table V-77

SAMPLING DATA
PLANT K
TREATED WASTEWATER

Pollutant	Stream Code	Sample Type	Source	Concentrations (mg/l) Day 1	Day 2	Day 3	Average
Toxic Pollutants							
4. benzene	K-4	1	0.019	*	0.051	*	0.017
	K-5	1	0.029	*	0.015	*	0.005
23. chloroform	K-4	1	0.045	0.018	0.037	0.043	0.033
	K-5	1	0.045	0.024	0.021	0.035	0.027
44. methylene chloride	K-4	1	1.300	0.650	0.860	1.400	0.970
	K-5	1	1.300	0.970	1.800	0.360	1.040
48. dichlorobromomethane	K-4	1	0.016	0.011	*	*	0.004
	K-5	1	0.016	*	*	*	*
55. naphthalene	K-4	3		0.016			0.016
	K-5	3,2,2		0.015	*		0.008
65. phenol	K-4	3		0.013			0.013
	K-5	3,2,2		*	*		*
66. bis(2-ethylhexyl) phthalate	K-4	3		*	*	0.041	0.014
	K-5	3,2,2		0.035	*	*	0.012
71. dimethyl phthalate	K-4	3		*		*	*
	K-5	3,2,2		*	0.011	*	0.004
119. chromium	K-4	3	<0.03	0.920		1.400	1.160
	K-5	2	<0.03		0.120	0.050	0.085
120. copper	K-4	3	<0.02	0.120		0.090	0.105
	K-5	2	<0.02		<0.020	<0.020	<0.020
124. nickel	K-4	3	<0.020	<0.020		<0.020	<0.020
	K-5	2	<0.020		0.020	<0.020	<0.020
128. zinc	K-4	3	<0.02	0.110		0.060	0.085
	K-5	2	<0.02		<0.020	0.020	<0.020

Table V-77 (Continued)

SAMPLING DATA
PLANT K
TREATED WASTEWATER

Pollutant	Stream Code	Sample Type	Source	Concentrations (mg/l) Day 1	Day 2	Day 3	Average
Nonconventional							
alkalinity	K-4	3	0.096	118.0		76.0	97.0
	K-5	2	0.096	120.0	107.0	81.0	102.7
aluminum	K-4	3	<0.10	34.0		57.0	45.5
	K-5	2	<0.10	13.0	12.0	15.0	13.3
calcium	K-4	3					
	K-5	2		22.0	24.0	29.0	25.0
chemical oxygen demand (COD)	K-4	3	5	52		61	57
	K-5	2	5		22	22	22
dissolved solids	K-4	3	0.164	674.0		742.0	708.0
	K-5	2	0.164	760.0	737.0	677.0	724.7
magnesium	K-4	3					
	K-5	2		6.00	6.20	6.60	6.27
phenols (total; by 4-AAP method)	K-4	1		0.004	0.006	0.008	0.006
	K-5	1		0.012	0.016	0.011	0.013
sulfate	K-4	3	<0.010	15.0		21.0	18.0
	K-5	2	<0.010	70.0	64.0	52.0	62.0
total organic carbon (TOC)	K-4	3	6	24		20	22
	K-5	2	6	11	13	9	11
Conventional							
oil and grease	K-4	1	3	8	8	3	6
	K-5	1	3	18	7	8	11
suspended solids	K-4	3	13	150		181	166
	K-5	2	13		11	10	11
pH (standard units)	K-4	1		8.6	5.7	6.7	
	K-5	1		9.3	7.0	7.3	

Table V-78

SAMPLING DATA
PLANT L
TREATED WASTEWATER

Pollutant	Stream Code	Sample Type	Source	Concentrations (mg/l) Day 1	Day 2	Day 3	Average
Toxic Pollutants							
44. methylene chloride	L-8	1	ND	0.090	ND	0.090	0.090
55. naphthalene	L-7*	1		ND			
	L-8	1		*	0.050	*	0.017
66. bis(2-ethylhexyl) phthalate	L-7*	1	ND	<5.000			<5.000
	L-8	1	ND	*	ND	ND	*
68. di-n-butyl phthalate	L-7*	1		<5.000			<5.000
	L-8	1		ND	ND	ND	
70. diethyl phthalate	L-7*	1		<5.000			<5.000
	L-8	1		ND	ND	ND	
71. dimethyl phthalate	L-7*	1		<5.000			<5.000
	L-8	1		ND	ND	ND	
119. chromium	L-8	1	<0.001	0.110	0.090	0.080	0.093
123. mercury	L-8	1	0.0073	0.0022	0.014	<0.0001	<0.005
Nonconventional							
aluminum	L-8	1	<0.5	0.77	5.8	2.4	3.0
calcium	L-8	1	9.0	120	221	104	148
chemical oxygen demand (COD)	L-8	1	<5	37	28	24	30
magnesium	L-8	1	2.24	8.23	0.34	4.56	4.38
phenols (total; by 4-AAP method)	L-8	1		0.017	0.004	0.005	0.009
total organic carbon (TOC)	L-8	1	2.8	6.1	12	11	10
Conventional							
oil and grease	L-8	1		<5	<5	276	<95
suspended solids	L-8	1	<2	<2	<2	11	<5
pH (standard units)	L-8	1		7.9	11.4	10.1	

*Stream L-7 was not analyzed for volatile organics and metals. Sludge sample.

Table V-79

SAMPLING DATA
PLANT P
TREATED WASTEWATER

Pollutant	Stream Code	Sample Type	Source	Concentrations (mg/l) Day 1	Day 2	Day 3	Average
Toxic Pollutants							
44. methylene chloride	P-7	1	*	0.310	0.070	0.260	0.213
55. naphthalene	P-7	1	ND	0.380	0.230	0.020	0.210
57. 2-nitrophenol	P-7	1	ND	0.100	0.150	0.020	0.090
	P-8	1	ND	ND			
62. N-nitrosodiphenylamine	P-7	1	ND	0.110	0.030	ND	0.070
	P-8	1	ND	ND			
65. phenol	P-7	1	ND	0.020	0.020	0.090	0.043
	P-8	1	ND	ND			
66. bis(2-ethylhexyl) phthalate	P-7	1	*	0.100	ND	ND	0.100
	P-8	1	*	45.500			45.500
78. anthracene (a)	P-7	1	ND	*	ND	ND	*
81. phenanthrene (a)	P-8	1	ND	<41.000			<41.000
85. tetrachloroethylene	P-7	1	ND	0.010	0.230	0.070	0.103
	P-8	1	ND	ND			
86. toluene	P-7	1	ND	0.020	0.030	0.010	0.020
	P-8	1	ND	ND			
115. arsenic	P-7	1	0.0011	0.01	0.015	0.0086	0.01
118. cadmium	P-7	1	<0.0005	0.003	<0.0041	<0.0005	<0.003
119. chromium	P-7	1	0.002	0.008	0.007	0.009	0.008
120. copper	P-7	1	0.009	0.06	0.07	0.066	0.07
121. cyanide	P-7	1		0.32	1.4	0.09	0.6
122. lead	P-7	1	0.002	0.21	0.4	0.071	0.2
124. nickel	P-7	1	<0.001	0.082	0.105	0.018	0.068
128. zinc	P-7	1	<0.01	0.42	0.83	0.24	0.50

Table V-79 (Continued)

SAMPLING DATA
PLANT P
TREATED WASTEWATER

Pollutant	Stream Code	Sample Type	Source	Concentrations (mg/l) Day 1	Day 2	Day 3	Average
Nonconventional							
aluminum	P-7	1	<0.5	4.1	1.035	1.3	2.1
calcium	P-7	1	96	27	39	22	29
chemical oxygen demand (COD)	P-7	1	<5	3,200	13,100	1,910	6,070
magnesium	P-7	1	26	11	16	11	13
phenols (total; by 4-AAP method)	P-7	1		0.323	0.234	0.313	0.290
total organic carbon (TOC)	P-7	1	2	950	1,790	881	1,207
Conventional							
oil and grease	P-7	1		27	52	18	32
suspended solids	P-7	1	5	153	187	63	134

(a) Reported together.

Table V-80

SAMPLING DATA
PLANT Q
TREATED WASTEWATER

Pollutant	Stream Code	Sample Type	Source	Concentrations (mg/l) Day 1	Day 2	Day 3	Average
Toxic Pollutants							
44. methylene chloride	Q-4	1	*	0.030	*	*	0.010
66. bis(2-ethylhexyl) phthalate	Q-4	3	*	*	*	*	*
	Q-5[a]	6	*	0.030			0.030
115. arsenic	Q-4	3	0.0028	0.13	0.088	0.69	0.30
	Q-5	1	0.0028	0.018			0.018
117. beryllium	Q-4	3	<0.0005	0.018	0.0067	0.019	0.015
	Q-5	1	<0.0005	<0.0005			<0.0005
118. cadmium	Q-4	3	<0.0005	0.0029	0.0017	0.0022	0.0023
	Q-5	1	<0.0005	0.0008			0.0008
119. chromium	Q-4	3	0.004	2.000	1.2	2.9	2.0
	Q-5	1	0.004	0.34			0.34
120. copper	Q-4	3	0.026	17	10	16	14
	Q-5	1	0.026	3			3
122. lead	Q-4	3	0.006	8	5.2	9.5	8
	Q-5	1	0.006	1.8			1.8
123. mercury	Q-4	3	<0.0001	0.002	0.0015	<0.0004	<0.001
	Q-5	1	<0.0001	0.0006			0.0006
124. nickel	Q-4	3	<0.001	0.054	0.013	0.04	0.04
	Q-5	1	<0.001	<0.001			<0.001
128. zinc	Q-4	3	<0.01	43	24	40	36
	Q-5	1	<0.01	9.8			9.8
Nonconventional							
alkalinity	Q-4	3		320	77	78	158
aluminum	Q-4	3	<0.5	450	240	390	360
	Q-5	1	<0.5	72			72

Table V-80 (Continued)

SAMPLING DATA
PLANT Q
TREATED WASTEWATER

Pollutant	Stream Code	Sample Type	Source	Concentrations (mg/l) Day 1	Day 2	Day 3	Average
calcium	Q-4	3	61	76	70	94	80
	Q-5	1	61	60			60
chemical oxygen demand (COD)	Q-4	3		55	16	25	32
dissolved solids	Q-4	3		1,050	570	650	760
magnesium	Q-4	3	12.2	21.9	18	27.6	23
	Q-5	1	12.2	15.9			15.9
sulfate	Q-4	3		140	68	84	97
phenols (total; by 4-AAP method)	Q-4	1		0.024	0.004	0.009	0.012
total organic carbons (TOC)	Q-4	3		1.4	0.74	1.7	1.3
Conventional							
oil and grease	Q-4	1		8			8
suspended solids	Q-4	3		2,460	1,010	1,360	1,610

[a]Sludge sample.

Table V-81

SAMPLING DATA
PLANT U
TREATED WASTEWATER

Pollutant	Stream Code	Sample Type	Source	Concentrations (mg/l) Day 1	Day 2	Day 3	Average
Toxic Pollutants							
1. acenaphthene	U-3	1	ND	ND	ND	ND	
	U-8	3	ND	ND	ND	ND	
	U-9	1	ND	0.060	0.140	0.140	0.113
	U-10[a]	1	ND	ND			
2. acrolein	U-3	1	ND	ND	ND	ND	
	U-8	3	ND	ND	ND	ND	
	U-9	1	ND	0.[illegible]40	0.020	0.050	0.037
5. benzidine	U-3	1	ND	ND	ND	ND	
	U-8	3	ND	ND	ND	ND	
	U-9	1	ND	ND	ND	0.020	0.020
	U-10	1	ND	ND			
11. 1,1,1-trichloroethane	U-3	1	*	ND	ND	ND	
	U-8	1	*	*	ND	*	*
	U-9	1	*	0.160	0.120	0.140	0.140
13. 1,1-dichloroethane	U-3	1	*	ND	ND	ND	
	U-8	1	*	ND	*	*	*
	U-9	1	*	0.020	0.030	0.030	0.027
44. methylene chloride	U-3	1	*	*	*	0.050	0.017
	U-8	1	*	*	*	*	*
	U-9	1	*	*	*	*	*
55. naphthalene	U-3	1	ND	ND	ND	ND	
	U-8	3	ND	0.070	0.200	0.120	0.130
	U-9	1	ND	0.050	0.030	0.070	0.050
	U-10	1	ND	ND			
65. phenol	U-3	1	ND	ND	ND	ND	
	U-8	3	ND	ND	0.050	ND	0.050
	U-9	1	ND	ND	ND	ND	
	U-10	1	ND	ND			
66. bis(2-ethylhexyl) phthalate	U-3	1	*	*	0.020	*	0.007
	U-8	3	*	0.140	ND	ND	0.140
	U-9	1	*	ND	0.080	0.080	0.080
	U-10	1	*	300.000			300.000

Table V-81 (Continued)

SAMPLING DATA
PLANT U
TREATED WASTEWATER

Pollutant	Stream Code	Sample Type	Source	Concentrations (mg/l) Day 1	Day 2	Day 3	Average
68. di-n-butyl phthalate	U-3	1	ND	0.030	*	*	0.010
	U-8	3	ND	0.180	0.090	0.040	0.103
	U-9	1	ND	0.020	0.080	0.150	0.083
	U-10	1	ND	90.000			90.000
69. di-n-octyl phthalate	U-3	1	ND	ND	ND	ND	
	U-8	3	ND	ND	ND	ND	
	U-9	1	ND	ND	0.020	0.030	0.025
	U-10	1	ND	ND			
70. diethyl phthalate	U-3	1	ND	0.020	*	*	0.007
	U-8	3	ND	0.120	ND	0.070	0.095
	U-9	1	ND	ND	0.030	ND	0.030
	U-10	1	ND	53.000			53.000
78. anthracene (a)	U-3	1	ND	ND	*	ND	*
81. phenanthrene (a)	U-8	3	ND	<0.180	<0.230	<0.110	<0.173
	U-9	1	ND	<0.120	<0.140	<0.170	<0.143
	U-10	1	ND	<110.000			<110.000
80. fluorene	U-3	1	ND	ND	ND	ND	
	U-8	3	ND	0.030	ND	ND	0.030
	U-9	1	ND	ND	0.020	ND	0.020
	U-10	1	ND	ND			
84. pyrene	U-3	1	ND	ND	ND	*	*
	U-8	3	ND	*	ND	0.020	0.010
	U-9	1	ND	*	*	ND	*
	U-10	1	ND	ND			
85. tetrachloroethylene	U-3	1	ND	ND	ND	ND	
	U-8	1	ND	*	0.020	*	0.007
	U-9	1	ND	*	*	*	*
86. toluene	U-3	1	ND	ND	ND	ND	
	U-8	1	ND	0.020	0.050	0.050	0.040
	U-9	1	ND	0.040	0.040	0.050	0.043
118. cadmium	U-3	1	0.002	0.002	0.002	<0.001	<0.002
	U-8	3	0.002	0.029	0.030	0.022	0.027
	U-9	1	0.002	0.003	0.011	0.012	0.009
	U-10	1	0.002	0.440			0.440

Table V-81 (Continued)

SAMPLING DATA
PLANT U
TREATED WASTEWATER

Pollutant	Stream Code	Sample Type	Source	Concentrations (mg/l) Day 1	Day 2	Day 3	Average
119. chromium	U-3	1	<0.001	<0.001	<0.001	<0.001	<0.001
	U-8	3	<0.001	0.042	0.169	0.064	0.092
	U-9	1	<0.001	0.002	0.005	0.005	0.004
	U-10	1	<0.001	8.6			8.6
120. copper	U-3	1	0.013	0.011	0.011	0.014	0.012
	U-8	3	0.013	0.680	1.160	0.640	0.827
	U-9	1	0.013	0.340	0.430	0.420	0.397
	U-10	1	0.013	13.00			13.00
122. lead	U-3	1	0.010	0.006	0.006	0.008	0.007
	U-8	3	0.010	7.090	20.600	15.200	14.297
	U-9	1	0.010	4.300	8.400	7.800	6.833
	U-10	1	0.010	4.900			4.900
123. mercury	U-3	1	0.005	0.003	0.003	0.003	0.003
	U-8	3	0.005	0.002	0.005	0.002	0.003
	U-9	1	0.005	0.003	0.003	0.002	0.003
	U-10	1	0.005	0.006			0.006
124. nickel	U-3	1	0.016	0.013	0.005	<0.001	<0.006
	U-8	3	0.016	0.088	0.089	0.049	0.075
	U-9	1	0.016	0.067	0.032	0.047	0.049
	U-10	1	0.016	3.520			3.520
128. zinc	U-3	1	ND	0.230	0.240	0.300	0.257
	U-8	3	ND	0.510	0.800	0.650	0.653
	U-9	1	ND	11.000	0.680	0.540	4.073
	U-10	1	ND	12.00			12.00
Nonconventional							
alkalinity	U-3	1		59.00	66.00	82.00	69.00
aluminum	U-3	1		<0.100	<0.100	<0.100	<0.100
	U-8	3		23.00	25.00	13.00	20.33
	U-9	1		2.000	2.000	2.000	2.000
	U-10	4		1,322			1,322
calcium	U-3	1		143.0	148.0	138.0	143.0
	U-8	3		59.60	89.40	98.00	82.33
	U-9	1		92.20	89.00	88.80	90.00
	U-10	4		417.0			417.0

Table V-81 (Continued)

SAMPLING DATA
PLANT U
TREATED WASTEWATER

Pollutant	Stream Code	Sample Type	Source	Concentrations (mg/l) Day 1	Day 2	Day 3	Average
chemical oxygen demand (COD)	U-3	1		11	18	108	46
	U-8	3		4,860	2,940	1,700	3,170
	U-9	1		1,210	981	4,070	2,087
	U-10	4		880,000			880,000
dissolved solids	U-3	1		830.0	830.0	840.0	833.3
magnesium	U-3	1		16.40	13.30	18.00	15.90
	U-8	3		12.70	12.70	11.80	12.40
	U-9	1		13.30	11.50	12.70	12.50
	U-10	4		47.00			47.00
sulfate	U-3	1		360	350	400	370
phenols (total; by 4-AAP method)	U-3	1		0.010	0.021	0.020	0.017
	U-8	1		0.043	0.135	0.081	0.086
	U-10	4		2.7			
total organic carbon (TOC)	U-3	1		2.8	3.3	5.6	3.9
	U-8	3		470	470	244	395
	U-9	1		228	265	129	207
	U-10	4		7,200			7,200
Conventional							
oil and grease	U-3	1		5	25	4,490	1,507
	U-8	1		4,000	46,700	3,120	17,940
	U-9	1		1,340	1,150	1,250	1,250
	U-10	1		938,000			938,000
suspended solids	U-3	1		3.8	11	139	51
	U-8	3		1,369	6,050	4,110	3,843
	U-9	1		490	498	392	460
	U-10	4		2,750			2,750
pH (standard units)	U-3	1			7.0		

(a) Reported together.

[a] Oil sample.

Table V-82

SAMPLING DATA
PLANT V
TREATED WASTEWATER

Pollutant	Stream Code	Sample Type	Source	Concentrations (mg/l) Day 1	Day 2	Day 3	Average
Toxic Pollutants							
11. 1,1,1-trichloroethane	V-8	2		ND	0.006	0.007	0.007
44. methylene chloride	V-8	2		0.031	0.007	0.006	0.015
65. phenol	V-8	1		1.600	0.920	0.540	1.020
66. bis(2-ethylhexyl) phthalate	V-8	2		0.008	0.002	0.001	0.004
68. di-n-butyl phthalate	V-8	2		ND	0.001	ND	0.001
70. diethyl phthalate	V-8	2		ND	0.002	ND	0.002
78. anthracene (a) 81. phenanthrene (a)	V-8	2		0.001	ND	ND	0.001
86. toluene	V-8	2		ND	0.004	0.004	0.004
115. arsenic	V-8	2		<0.005	0.085	<0.005	<0.032
118. cadmium	V-8	2		<0.001	0.002	0.001	<0.001
119. chromium	V-8	2		0.005	0.004	0.006	0.005
120. copper	V-8	2		0.027	0.027	0.07	0.04
122. lead	V-8	2		<0.001	0.004	0.003	<0.003
124. nickel	V-8	2		0.004	0.006	0.005	0.005
128. zinc	V-8	2		0.06	0.08	0.35	0.16
Nonconventional							
alkalinity	V-8	2		270	250	250	260
aluminum	V-8	2		6.1	3.8	2.2	4.0
calcium	V-8	2		68	67	81	72
chemical oxygen demand (COD)	V-8	2		120	44	150	105

Table V-82 (Continued)

SAMPLING DATA
PLANT V
TREATED WASTEWATER

Pollutant	Stream Code	Sample Type	Source	Concentrations (mg/l) Day 1	Day 2	Day 3	Average
dissolved solids	V-8	2		830	950	660	810
magnesium	V-8	2		53	50	62	55
phenols (total; by 4-AAP method)	V-8	2		2.400	1.800	0.440	1.547
sulfate	V-8	2		210	220	91	174
total organic carbon (TOC)	V-8	2		42	42	63	49
Conventional							
oil and grease	V-8	1		15	11	15	14
suspended solids	V-8	2		36	36	33	35

(a) Reported together.

Section VI

SELECTION OF POLLUTANT PARAMETERS

The Agency has studied aluminum forming wastewaters to determine the presence or absence of toxic, conventional and selected nonconventional pollutants. The toxic pollutants and nonconventional pollutants are subject to BAT effluent limitations and guidelines. Conventional pollutants are considered in establishing BPT, BCT, and NSPS limitations.

One hundred and twenty-nine toxic pollutants (known as the 129 priority pollutants) were studied pursuant to the requirements of the Clean Water Act of 1977 (CWA). These pollutant parameters, which are listed in Table VI-1, are members of the 65 pollutants and classes of toxic pollutants referred to as Table 1 in Section 307(a)(1) of the CWA.

From the original list of 129 pollutants, three pollutants have been deleted in two separate amendments to 40 CFR Subchapter N, Part 401. Dichlorodifluoromethane and trichlorofluoromethane were deleted first (46 FR 2266, January 8, 1981) followed by the deletion of bis-(chloromethyl) ether (46 FR 10723, February 4, 1981). The Agency has concluded that deleting these compounds will not compromise adequate control over their discharge into the aquatic environment and that no adverse effects on the aquatic environment or on human health will occur as a result of deleting them from the list of toxic pollutants.

Past studies by EPA and others have identified many nontoxic pollutant parameters useful in characterizing industrial wastewaters and in evaluating treatment process removal efficiencies. Certain of these and other parameters may also be selected as reliable indicators of the presence of specific toxic pollutants. For these reasons, a number of nontoxic pollutants were also studied for the aluminum forming category.

Congress has defined the criteria for the selection of conventional pollutants (43 FR 32857 January 11, 1980). These criteria are:

1. Generally those pollutants that are naturally occurring, biodegradable; oxygen-demanding materials, and solids that have characteristics similar to naturally occuring, biodegradable substances; or,

2. Include those classes of pollutants that traditionally have been the primary focus of wastewater control.

The conventional pollutants considered (total suspended solids, oil and grease, and pH) traditionally have been studied to characterize industrial wastewaters. These parameters are especially useful in evaluating the effectiveness of wastewater treatment processes.

Several nonconventional pollutants were considered. These included aluminum, chemical oxygen demand (COD), phenols (total), and total organic carbon (TOC). In addition, calcium, magnesium, alkalinity, total dissolved solids and sulfate were measured to provide data to evaluate the cost of chemical precipitation and sedimentation treatment of certain wastewater streams. Of these pollutants, only aluminum was considered for regulation in establishing effluent limitations guidelines, since it is the metal being processed and is found in significant concentration in all wastewater streams.

RATIONALE FOR SELECTION OF POLLUTANT PARAMETERS

A pollutant that was never detected, or that was never found above its analytical quantification level, was eliminated from consideration. The analytical quantification level for a pollutant is the minimum concentration at which that pollutant can be reliably measured. For the toxic pollutants in this study, the analytical quantification levels are: 0.005 mg/l for pesticides, PCB's, chromium, and nickel; 0.010 mg/l for the remaining organic toxic pollutants and cyanide, arsenic, beryllium, and selenium; 10 million fibers per liter (10 MFL) for asbestos; 0.020 mg/l for lead and silver; 0.009 mg/l for copper; 0.002 mg/l for cadmium; and 0.0001 mg/l for mercury.

The pesticide TCDD (2,3,7,8-tetrachloridibenzo-p-dioxin) was not analyzed for because a standard sample was unavailable to the analytical laboratories. Samples collected by the Agency's contractor were not analyzed for asbestos. Data on asbestos content are available for a very small number of samples relevant to this study as a result of the first phase of a screening program for asbestos in a wide range of industrial categories. Of these samples, only a few appear to contain asbestos at analytically significant levels. A verification sampling plan has not been developed at this time.

Pollutants which were detected below levels considered achievable by specific available treatment methods were also eliminated from further consideration. For the toxic metals, the chemical precipitation, sedimentation, and filtration technology treatability values, which are presented in Section VII (Table VII-21,

p. 748), were used. For the toxic organic pollutants detected above their analytical quantification level, treatability levels for activated carbon technology were used. These treatability values represent the most stringent treatment options considered for pollutant removal. This allows for the most conservative pollutant exclusion based on pollutants detected below treatable levels.

Waste streams in the aluminum forming category have been grouped together into core and ancillary waste streams in the subcategorization scheme, which has been described in Section IV. The pollutant exclusion procedure was applied for the following:

(1) Rolling With Neat Oils Core Waste Streams
(2) Rolling With Emulsions Core Waste Streams
(3) Extrusion Core Waste Streams
(4) Forging Core Waste Streams
(5) Drawing With Neat Oils Core Waste Streams
(6) Drawing With Emulsions Or Soaps Core Waste Streams
(7) Ancillary Waste Streams

Toxic pollutants remaining after the application of the exclusion process were then selected for further consideration in establishing specific regulations.

DESCRIPTION OF POLLUTANT PARAMETERS

The following discussion addresses the pollutant parameters detected above their analytical quantification level in any sample of aluminum forming wastewater. The description of each pollutant provides the following information: the source of the pollutant; whether it is a naturally occuring element, processed metal, or manufactured compound; general physical properties and the form of the pollutant; toxic effects of the pollutant in humans and other animals; and behavior of the pollutant in a POTW at concentrations that might be expected from industrial discharges.

Acenaphthene (1). Acenaphthene (1,2-dihydroacenaphthylene, or 1,8-ethylene-naphthalene) is a polynuclear aromatic hydrocarbon (PAH) with molecular weight of 154 and a formula of $C_{12}H_{10}$.

Acenaphthene occurs in coal tar produced during high temperature coking of coal. It has been detected in cigarette smoke and gasoline exhaust condensates.

The pure compound is a white crystalline solid at room temperature with a melting range of 95°C to 97°C and a boiling range of 278°C to 280°C. Its vapor pressure at room temperature is less than 0.02 mm Hg. Acenaphthene is slightly soluble in water (100

mg/l), but even more soluble in organic solvents such as ethanol, toluene, and chloroform. Acenaphthene can be oxidized by oxygen or ozone in the presence of certain catalysts. It is stable under laboratory conditions.

Acenaphthene is used as a dye intermediate, in the manufacture of some plastics, and as an insecticide and fungicide.

So little research has been performed on acenaphthene that its mammalian and human health effects are virtually unknown. The water quality criterion of 0.02 mg/l is recommended to prevent the adverse effects on humans due to the organoleptic properties of acenaphthene in water.

No detailed study of acenaphthene behavior in a POTW is available. However, it has been demonstratd that none of the organic toxic pollutants studied so far can be broken down by biological treatment processes as readily as fatty acids, carbohydrates, or proteins. Many of the toxic pollutants have been investigated, at least in laboratory-scale studies, at concentrations higher than those expected to be contained by most municipal wastewaters. General observations relating molecular structure to ease of degradation have been developed for all of the toxic organic pollutants.

The conclusion reached by study of the limited data is that biological treatment produces little or no degradation of acenaphthene. No evidence is available for drawing conclusions about its possible toxic or inhibitory effect on POTW operation.

Its water solubility would allow acenaphthene present in the influent to pass through a POTW into the effluent. The hydrocarbon character of this compound makes it sufficiently hydrophobic that adsorption onto suspended solids and retention in the sludge may also be a significant route for removal of acenaphthene from the POTW.

Acenaphthene has been demonstrated to affect the growth of plants through improper nuclear division and polyploidal chromosome number. However, it is not expected that land application of sewage sludge containing acenaphthene at the low concentrations which are to be expectd in a POTW sludge would result in any adverse effects on animals ingesting plants grown in such soil.

Benzene (4). Benzene (C_6H_6) is a clear, colorless liquid obtained mainly from petroleum feedstocks by several different processes. Some is recovered from light oil obtained from coal carbonization gases. It boils at 80°C and has a vapor pressure of 100 mm Hg at 26°C. It is slightly soluble in water (1.8 g/l at 25°C) and it dissolves in hydrocarbon solvents. Annual U.S. production is three to four million tons.

Most of the benzene used in the U.S. goes into chemical manufacture. About half of that is converted to ethylbenzene which is used to make styrene. Some benzene is used in motor fuels.

Benzene is harmful to human health according to numerous published studies. Most studies relate effects of inhaled benzene vapors. These effects include nausea, loss of muscle coordination, and excitement, followed by depression and coma. Death is usually the result of respiratory or cardiac failure. Two specific blood disorders are related to benzene exposure. One of these, acute myelogenous leukemia, represents a carcinogenic effect of benzene. However, most human exposure data is based on exposure in occupational settings and benzene carcinogenisis is not considered to be firmly established.

Oral administration of benzene to laboratory animals produced leukopenia, a reduction in mumber of leukocytes in the blood. Subcutaneous injection of benzene-oil solutions has produced suggestive, but not conclusive, evidence of benzene carcinogenisis.

Benzene demonstrated teratogenic effects in laboratory animals, and mutagenic effects in humans and other animals.

For maximum protection of human health from the potential carcinogenic effects of exposure to benzene through ingestion of water and contaminated aquatic organisms, the ambient water concentration is zero. Concentrations of benzene estimated to result in additional lifetime cancer risk at levels of 10^{-7}, 10^{-6}, and 10^{-5} are 0.00015 mg/l, 0.0015 mg/l, and 0.015 mg/l, respectively.

Some studies have been reported regarding the behavior of benzene in a POTW. Biochemical oxidation of benzene under laboratory conditions, at concentrations of 3 to 10 mg/l, produced 24, 27, 24, and 20 percent degradation in 5, 10, 15, and 20 days, respectively, using unacclimated seed cultures in fresh water. Degradation of 58, 67, 76, and 80 percent was produced in the same time periods using acclimated seed cultures. Other studies produced similar results. Based on these data and general conclusions relating molecular structure to biochemical oxidation, it is expected that biological treatment in a POTW will remove benzene readily from the water. Other reports indicate that most benzene entering a POTW is removed to the sludge and that influent concentrations of 1 g/l inhibit sludge digestion. There is no information about possible effects of benzene on crops grown in soils amended with sludge containing benzene.

Carbon Tetrachloride (6). Carbon tetrachloride (CCl_4), also called tetrachloromethane, is a colorless liquid produced primarily by the chlorination of hydrocarbons - particularly methane.

Carbon tetrachloride boils at 77°C and has a vapor pressure of 90 mm Hg at 20°C. It is slightly soluble in water (0.8 gm/l at 25°C) and soluble in many organic solvents. Approximately one-third of a million tons is produced annually in the U.S.

Carbon tetrachloride, which was displaced by perchloroethylene as a dry cleaning agent in the 1930's, is used principally as an intermediate for production of chlorofluoromethanes for refrigerants, aerosols, and blowing agents. It is also used as a grain fumigant.

Carbon tetrachloride produces a variety of toxic effects in humans. Ingestion of relatively large quantities - greater than five grams - has frequently proved fatal. Symptoms are burning sensation in the mouth, esophagus, and stomach, followed by abdominal pains, nausea, diarrhea, dizziness, abnormal pulse, and coma. When death does not occur immediately, liver and kidney damage are usually found. Symptoms of chronic poisoning are not as well defined. General fatigue, headache, and anxiety have been observed, accompanied by digestive tract and kidney discomfort or pain.

Data concerning teratogenicity and mutagenicity of carbon tetrachloride are scarce and inconclusive. However, carbon tetrachloride has been demonstrated to be carcinogenic in laboratory animals. The liver was the target organ.

For maximum protection of human health from the potential carcinogenic effects of exposure to carbon tetrachloride through ingestion of water and contaminated aquatic organisms, the ambient water concentration of zero. Concentrations of carbon tetrachloride estimated to result in additional lifetime cancer risk at risk levels of 10^{-7}, 10^{-6}, and 10^{-5} are 0.000026 mg/l, 0.00026 mg/l, and 0.0026 mg/l, respectively.

Data on the behavior of carbon tetrachloride in a POTW are not available. Many of the toxic organic pollutants have been investigated, at least in laboratory-scale studies, at concentrations higher than those expected to be found in most municipal wastewaters. General observations have been developed relating molecular structure to ease of degradation for all of the toxic organic pollutants. The conclusion reached by study of the limited data is that biological treatment produces a moderate degree of removal of carbon tetrachloride in a POTW. No information was found regarding the possible interference of carbon tetrachloride with treatment processes. Based on the water solubility of carbon tetrachloride, and the vapor pressure of this compound, it is expected that some of the undegraded carbon tetrachloride will pass through to the POTW effluent and some will be volatilized in aerobic processes.

Chlorobenzene (7). Chlorobenzene (C_6H_5Cl), also called monochlorobenzene is a clear, colorless, liquid manufactured by the liquid phase chlorination of benzene over a catalyst. It boils at 132°C and has a vapor pressure of 12.5 mm Hg at 25°C. It is almost insoluble in water (0.5 g/l at 30°C), but dissolves in hydrocarbon solvents. U.S. annual production is near 150,000 tons.

Principal uses of chlorobenzene are as a solvent and as an intermediate for dyes and pesticides. Formerly it was used as an intermediate for DDT production, but elimination of production of that compound reduced annual U.S. production requirements for chlorobenzene by half.

Data on the threat to human health posed by chlorobenzene are limited in number. Laboratory animals, administered large doses of chlorobenzene subcutaneously, died as a result of central nervous system depression. At slightly lower dose rates, animals died of liver or kidney damage. Metabolic disturbances occurred also. At even lower dose rates of orally administered chlorobenzene similar effects were observed, but some animals survived longer than at higher dose rates. No studies have been reported regarding evaluation of the teratogenic, mutagenic, or carcinogenic potential of chlorobenzene.

For the prevention of adverse effects due to the organoleptic properties of chlorobenzene in water the recommended criterion is 0.020 mg/l.

Only limited data are available on which to base conclusions about the behavior of chlorobenzene in a POTW. Laboratory studies of the biochemical oxidation of chlorobenzene have been carried out at concentrations greater than those expected to normally be present in POTW influent. Results showed the extent of degradation to be 25, 28, and 44 percent after 5, 10, and 20 days, respectively. In another, similar study using a phenol-adapted culture 4 percent degradation was observed after 3 hours with a solution containing 80 mg/l. On the basis of these results and general conclusions about the relationship of molecular structure to biochemical oxidation, it is concluded that chlorobenzene remaining intact is expected to volatilize from the POTW in aeration processes. The estimated half-life of chlorobenzene in water based on water solubility, vapor pressure and molecular weight is 5.8 hours.

1,1,1-Trichloroethane (11). 1,1,1-Trichloroethane is one of the two possible trichlorethanes. It is manufactured by hydrochlorinating vinyl chloride to 1,1-dichloroethane which is then chlorinated to the desired product. 1,1,1-Trichloroethane is a liquid at room temperature with a vapor pressure of 96 mm Hg at 20°C and a boiling point of 74°C. Its formula is CCl_3CH_3. It is

slightly soluble in water (0.48 g/l) and is very soluble in organic solvents. U.S. annual production is greater than one-third of a million tons.

1,1,1-Trichloroethane is used as an industrial solvent and degreasing agent.

Most human toxicity data for 1,1,1-trichloroethane relates to inhalation and dermal exposure routes. Limited data are available for determining toxicity of ingested 1,1,1-trichloroethane, and those data are all for the compound itself, not solutions in water. No data are available regarding its toxicity to fish and aquatic organisms. For the protection of human health from the toxic properties of 1,1,1-trichloroethane ingested through the comsumption of water and fish, the ambient water criterion is 15.7 mg/l. The criterion is based on bioassays for possible carcinogenicity.

No detailed study of 1,1,1-trichloroethane behavior in a POTW is available. However, it has been demonstrated that none of the toxic organic pollutants of this type can be broken down by biological treatment processes as readily as fatty acids, carbohydrates, or proteins.

Biochemical oxidation of many of the toxic organic pollutants has been investigated, at least in laboratory scale studies, at concentrations higher than commonly expected in municipal wastewater. General observations relating molecular structure to ease of degradation have been developed for all of these pollutants. The conclusion reached by study of the limited data is that biological treatment produces a moderate degree of degradation of 1,1,1-trichloroethane. No evidence is available for drawing conclusions about its possible toxic or inhibitory effect on POTW operation. However, for degradation to occur, a fairly constant input of the compound would be necessary.

Its water solubility would allow 1,1,1-trichloroethane, present in the influent and not biodegradable, to pass through a POTW into the effluent. One factor which has received some attention, but no detailed study, is the volatilization of the lower molecular weight organics from a POTW. If 1,1,1-trichloroethane is not biodegraded, it will volatilize during aeration processes in the POTW.

<u>1,1-Dichloroethane (13)</u>. 1,1-Dichloroethane, also called ethylidene dichloride and ethylidene chloride, is a colorless liquid manufactured by reacting hydrogen chloride with vinyl chloride in 1,1-dichloroethane solution in the presence of a catalyst. However, it is reportedly not manufactured commercially in the U.S.

1,1-Dichloroethane boils at 57°C and has a vapor pressure of 182 mm Hg at 20°C. It is slightly soluble in water (5.5 g/l at 20°C) and very soluble in organic solvents.

1,1-Dichloroethane is used as an extractant for heat-sensitive substances and as a solvent for rubber and silicone grease.

1,1-Dichloroethane is less toxic than its isomer (1,2-dichloroethane), but its use as an anesthetic has been discontinued because of marked excitation of the heart. It causes central nervous system depression in humans. There are insufficient data to derive water quality criteria for 1,1-dichloroethane.

Data on the behavior of 1,1-dichloroethane in a POTW are not available. Many of the toxic organic pollutants have been investigated, at least in laboratory scale studies, at concentrations higher than those expected to be contained by most municipal wastewaters. General observations have been developed relating molecular structure to ease of degradation for all of the toxic organic pollutants. The conclusion reached by study of the limited data is that biological treatment produces only a moderate removal of 1,1-dichloroethane in a POTW by degradation.

The high vapor pressure of 1,1-dichloroethane is expected to result in volatilization of some of the compound from aerobic processes in a POTW. Its water solubility will result in some of the 1,1-dichloroethane which enters the POTW leaving in the effluent from the POTW.

<u>1,1,2-Trichloroethane (14)</u>. 1,1,2-Trichloroethane is one of the two possible trichloroethanes and is sometimes called ethane trichloride or vinyl trichloride. It is used as a solvent for fats, oils, waxes, and resins, in the manufacture of 1,1-dichloroethylene, and as an intermediate in organic synthesis.

1,1,2-Trichloroethane is a clear, colorless liquid at room temperature with a vapor pressure of 16.7 mm Hg at 20°C, and a boiling point of 113°C. It is insoluble in water and very soluble in organic solvents. The formula is $CHCl_2CH_2Cl$.

Human toxicity data for 1,1,2-trichloroethane does not appear in the literature. The compound does produce liver and kidney damage in laboratory animals after intraperitoneal administration. No literature data was found concerning teratogenicity or mutagenicity of 1,1,2-trichloroethane. However, mice treated with 1,1,2-trichloroethane showed increased incidence of hepatocellular carcinoma. Although bioconcentration factors are not available for 1,1,2-trichloroethane in fish and other freshwater aquatic organisms, it is concluded on the basis of octanol-water partition coefficients that bioconcentration does occur.

For the maximum protection of human health from the potential carcinogenic effects of exposure to 1,1,2-trichloroethane through ingestion of water and contaminated aquatic organisms, the ambient water concentration is zero. Concentrations of this compound estimated to result in additional lifetime cancer risks at risk levels of 10^{-7}, 10^{-6}, and 10^{-5} are 0.00006 mg/l, 0.0006 mg/l, and 0.006 mg/l, respectively. If contaminated aquatic organisms alone are consumed, excluding the consumption of water, the water concentration should be less than 0.418 mg/l to keep the increased lifetime cancer risk below 10^{-5}. Available data show that adverse effects on aquatic life occur at concentrations higher than those cited for human health risks.

No detailed study of 1,1,2-trichloroethane behavior in a POTW is available. However, it is reported that small amounts are formed by chlorination processes and that this compound persists in the environment (greater than two years) and it is not biologically degraded. This information is not completely consistant with the conclusions based on laboratory scale biochemical oxidation studies and relating molecular structure to ease of degradation. That study concluded that biological treatment in a POTW will produce moderate removal of 1,1,2-trichloroethane.

The lack of water solubility and the relatively high vapor pressure may lead to removal of this compound from a POTW by volatilization.

<u>2,4,6-Trichlorophenol (21)</u>. 2,4,6-Trichlorophenol ($Cl_3C_6H_2OH$, abbreviated here to 2,4,6-TCP) is a colorless, crystalline solid at room temperature. It is prepared by the direct chlorination of phenol. 2,4,6-TCP melts at 68°C and is slightly soluble in water (0.8 gm/l at 25°C). This phenol does not produce a color with 4-aminoantipyrene, and therefore does not contribute to the nonconventional pollutant parameter "Total Phenols." No data were found on production volumes.

2,4,6-TCP is used as a fungicide, bactericide, glue and wood preservative, and for antimildew treatment. It is also used for the manufacture of 2,3,4,6-tetrachlorophenol and pentachlorophenol.

No data were found on human toxicity effects of 2,4,6-TCP. Reports of studies with laboratory animals indicate that 2,4,6-TCP produced convulsions when injected interperitoneally. Body temperature was elevated also. The compound also produced inhibition of ATP production in isolated rat liver mitochondria, increased mutation rates in one strain of bacteria, and produced a genetic change in rats. No studies on teratogenicity were found. Results of a test for carcinogenicity were inconclusive.

For the prevention of adverse effects due to the organoleptic properties of 2,4,6-trichlorophenol in water, the water quality criterion is 0.100 mg/l.

Although no data were found regarding the behavior of 2,4,6-TCP in a POTW, studies of the biochemical oxidation of the compound have been made at laboratory scale at concentrations higher than those normally expected in municipal wastewaters. Biochemical oxidation of 2,4,6-TCP at 100 mg/l produced 23 percent degradation using a phenol-adapted acclimated seed culture. Based on these results, biological treatment in a POTW is expected to produce a moderate degree of degradation. Another study indicates that 2,4,6-TCP may be produced in a POTW by chlorination of phenol during normal chlorination treatment.

Para-chloro-meta-cresol (22). Para-chloro-meta-cresol (ClC_7H_6OH) is thought to be a 4-chloro-3-methyl-phenol (4-chloro-meta-cresol, or 2-chloro-5-hydroxy-toluene), but is also used by some authorities to refer to 6-chloro-3-methyl-phenol (6-chloro-meta-cresol, or 4-chloro-3-hydroxy-toluene), depending on whether the chlorine is considered to be para to the methyl or to the hydroxy group. It is assumed for the purposes of this document that the subject compound is 2-chloro-5-hydroxy-toluene. This compound is a colorless crystalline solid melting at 66 to 68°C. It is slightly soluble in water (3.8 gm/l) and soluble in organic solvents. This phenol reacts with 4-amino-antipyrene to give a colored product and therefore contributes to the nonconventional pollutant parameter designated "Total Phenols." No information on manufacturing methods or volumes produced was found.

Para-chloro-meta cresol (abbreviated here as PCMC) is marketed as a microbicide, and was proposed as an antiseptic and disinfectant more than 40 years ago. It is used in glues, gums, paints, inks, textiles, and leather goods. PCMC was found in raw wastewaters from the die casting quench operation from one subcategory of foundry operations.

Although no human toxicity data are available for PCMC, studies on laboratory animals have demonstrated that this compound is toxic when administered subcutaneously and intravenously. Death was preceded by severe muscle tremors. At high dosages kidney damage occurred. On the other hand, an unspecified isomer of chlorocresol, presumed to be PCMC, is used at a concentration of 0.15 percent to preserve muicous heparin, a natural product administered intravenously as an anticoagulant. The report does not indicate the total amount of PCMC typically received. No information was found regarding possible teratogenicity, or carcinogenicity of PCMC.

Two reports indicate that PCMC undergoes degradation in biochemical oxidation treatments carried out at concentrations higher than are expected to be encountered in POTW influents. One study showed 50 percent degradation in 3.5 hours when a phenol-adapted acclimated seed culture was used with a solution of 60 mg/l PCMC. The other study showed 100 percent degradation of a 20 mg/l solution of PCMC in two weeks in an aerobic activated sludge test system. No degradation of PCMC occurred under anaerobic conditions.

Chloroform (23). Chloroform also called trichloromethane, is a colorless liquid manufactured commercially by chlorination of methane. Careful control of conditions maximizes chloroform production, but other products must be separated. Chloroform boils at 61°C and has a vapor pressure of 200 mm Hg at 25°C. It is slightly soluble in water (8.22 g/l at 20°C) and readily soluble in organic solvents.

Chloroform is used as a solvent and to manufacture refrigerants, pharmaceuticals, plastics, and anesthetics. It is seldom used as an anesthetic.

Toxic effects of chloroform on humans include central nervous system depression, gastrointestinal irritation, liver and kidney damage and possible cardiac sensitization to adrenalin. Carcinogenicity has been demonstrated for chloroform on laboratory animals.

For the maximum protection of human health from the potential carcinogenic effects of exposure to chloroform through ingestion of water and contaminated aquatic organisms, the ambient water concentration is zero. Concentrations of chloroform estimated to result in additional lifetime cancer risks at the levels of 10^{-7}, 10^{-6}, and 10^{-5} were 0.000021 mg/l, 0.00021 mg/l, and 0.0021 mg/l, respectively.

No data are available regarding the behavior of chloroform in a POTW. However, the biochemical oxidation of this compound was studied in one laboratory scale study at concentrations higher than those expected to be contained by most municipal wastewaters. After 5, 10, and 20 days no degradation of chloroform was observed. The conclusion reached is that biological treatment produces little or no removal by degradation of chloroform in a POTW.

The high vapor pressure of chloroform is expected to result in volatilization of the compound from aerobic treatment steps in a

POTW. Remaining chloroform is expected to pass through into the POTW effluent.

2-Chlorophenol (24). 2-Chlorophenol (ClC_6H_4OH), also called ortho-chlorophenol, is a colorless liquid at room temperature, manufactured by direct chlorination of phenol followed by distillation to separate it from the other principal product, 4-chlorophenol. 2-Chlorophenol solidifies below 7°C and boils at 176°C. It is soluble in water (28.5 gm/l at 20°C) and soluble in several types of organic solvents. This phenol gives a strong color with 4-aminoantipyrene and therefore contributes to the nonconventional pollutant parameter "Total Phenols." Production statistics could not be found. 2-Chlorophenol is used almost exclusively as a chemical intermediate in the production of pesticides and dyes. Production of some phenolic resins uses 2-chlorophenol.

Very few data are available on which to determine the toxic effects of 2-chlorophenol on humans. The compound is more toxic to laboratory mammals when administered orally than when administered subcutaneously or intravenously. This affect is attributed to the fact that the compound is almost completely in the un-ionized state at the low pH of the stomach and hence is more readily absorbed into the body. Initial symptoms are restlessness and increased respiration rate, followed by motor weakness and convulsions induced by noise or touch. Coma follows. Following lethal doses, kidney, liver, and intestinal damage were observed. No studies were found which addressed the teratogenicity or mutagenicity of 2-chlorophenol. Studies of 2-chlorophenol as a promoter of carcinogenic activity of other carcinogens were conducted by dermal application. Results do not bear a determinable relationship to results of oral administration studies.

For the prevention of adverse effects due to the organoleptic properties of 2-chlorophenol in water, the criterion is 0.0003 mg/l.

Data on the behavior of 2-chlorophenol in a POTW are not available. However, laboratory scale studies have been conducted at concentrations higher than those expected to be found in municipal wastewaters. At 1 mg/l of 2-chlorophenol, an acclimated culture produced 100 percent degradation by biochemical oxidation after 15 days. Another study showed 45, 70, and 79 percent degradation by biochemical oxidation after 5, 10, and 20 days, respectively. The conclusion reached by the study of these limited data, and general observations on all toxic organic pollutants relating molecular structure to ease of biochemcial oxidation, is that 2-chlorophenol is removed to a high degree or

completely by biological treatment in a POTW. Undegraded 2-chlorophenol is expected to pass through a POTW into the effluent because of the water solubility. Some 2-chlorophenol is also expected to be generated by chlorination treatments of POTW effluents containing phenol.

1,1-Dichloroethylene (29). 1,1-Dichloroethylene (1,1-DCE), also called vinylidene chloride, is a clear colorless liquid manufactured by dehydrochlorination of 1,1,2-trichloroethane. 1,1-DCE has the formula CCl_2CH_2. It has a boiling point of 32°C, and a vapor pressure of 591 mm Hg at 25°C. 1,1-DCE is slightly soluble in water (2.5 mg/l) and is soluble in many organic solvents. U.S. production is in the range of hundreds of thousands of tons annually.

1,1-DCE is used as a chemical intermediate and for copolymer coatings or films. It may enter the wastewater of an industrial facility as the result of decomposition of 1,1,1-trichloroethylene used in degreasing operations, or by migration from vinylidene chloride copolymers exposed to the process water. Human toxicity of 1,1-DCE has not been demonstrated; however, it is a suspected human carcinogen. Mammalian toxicity studies have focused on the liver and kidney damage produced by 1,1-DCE. Various changes occur in those organs in rats and mice ingesting 1,1-DCE.

For the maximum protection of human health from the potential carcinogenic effects of exposure to 1,1-dichloroethylene through ingestion of water and contaminated aquatic organisms, the ambient water concentration is zero. The concentration of 1,1-DCE estimated to result in an additional lifetime cancer risk of 1 in 100,000 is 0.0013 mg/l.

Under laboratory conditions, dichloroethylenes have been shown to be toxic to fish. The primary effect of acute toxicity of the dichloroethylenes is depression of the central nervous system. The octanol/water partition coefficident of 1,1-DCE indicates it should not accumulate significantly in animals.

The behavior of 1,1-DCE in a POTW has not been studied. However, its very high vapor pressure is expected to result in release of significant percentages of this material to the atmosphere in any treatment involving aeration. Degradation of dichloroethylene in air is reported to occur, with a half-life of eight weeks.

Biochemical oxidation of many of the toxic organic pollutants has been investigated in laboratory scale studies at concentrations higher than would normally be expected in municipal wastewaters. General observations relating molecular structure to ease of

degradation have been developed for all of these pollutants. The conclusion reached by study of the limited data is that biological treatment produces little or no degradation of 1,1-dichloroethylene. No evidence is available for drawing conclusions about the possible toxic or inhibitory effect of 1,1-DCE on POTW operation. Because of water solubility, 1,1-DCE which is not volatilized or degraded is expected to pass through a POTW. Very little 1,1-DCE is expected to be found in sludge from a POTW.

1,2-trans-Dichloroethylene (30). 1,2-Dichloroethylene (1,2-trans-DCE) is a clear, colorless liquid with the formula CHClCHCl. 1,2-trans-DCE is produced in mixture with the cis-isomer by chlorination of acetylene. The cis-isomer has distinctly different physical properties. Industrially, the mixture is used rather than the separate isomers. 1,2-trans-DCE has a boiling point of 48°C, and a vapor pressure of 234 mm Hg at 25°C.

The principal use of 1,2-dichloroethylene (mixed isomers) is to produce vinyl chloride. It is used as a lead scavenger in gasoline, general solvent, and for synthesis of various other organic chemicals. When it is used as a solvent, 1,2-trans-DCE can enter wastewater streams.

Although 1,2-trans-DCE is thought to produce fatty degeneration of mammalian liver, there are insufficient data on which to base any ambient water criterion.

In the reported toxicity test of 1,2-trans-DCE on aquatic life, the compound appeared to be about half as toxic as the other dichloroethylene (1,1-DCE) on the toxic pollutants list.

The behavior of 1,2-trans-DCE in a POTW has not been studied. However, its high vapor pressure is expected to result in release of a significant percentage of this compound to the atmosphere in any treatment involving aeration. Degradation of the dichloroethylenes in air is reported to occur, with a half-life of eight weeks.

Biochemical oxidation of many of the toxic organic pollutants has been investigated in laboratory scale studies at concentrations higher than would normally be expected in municipal wastewaters. General observations relating molecular structure to ease of degradation have been developed for all of these pollutants. The conclusion reached by the study of the limited data is that biochemical oxidation produces little or no degradation of 1,2-trans-dichloroethylene. No evidence is available for drawing conclusions about the possible toxic or inhibitory effect of 1,2-trans-dichloroethylene on POTW operation. It is expected that its low molecular weight and degree of water solubility will

result in 1,2-trans-DCE passing through a POTW to the effluent if it is not degraded or volatilized. Very little 1,2-trans-DCE is expected to be found in sludge from a POTW.

2,4-Dimethylphenol (34). 2,4-Dimethylphenol (2,4-DMP), also called 2,4-xylenol, is a colorless, crystalline solid at room temperature (25°C), but melts at 27°C to 28°C. 2,4-DMP is slightly soluble in water and, as a weak acid, is soluble in alkaline solutions. Its vapor pressure is less than 1 mm Hg at room temperature.

2,4-DMP is a natural product, occurring in coal and petroleum sources. It is used commercially as an intermediate for manufacture of pesticides, dye stuffs, plastics and resins, and surfactants. It is found in the water runoff from asphalt surfaces. It can find its way into the wastewater of a manufacturing plant from any of several adventitious sources.

Analytical procedures specific to this compound are used for its identification and quantification in wastewaters. This compound does not contribute to "Total Phenols" determined by the 4-aminoantipyrene method.

Three methylphenol isomers (cresols) and six dimethylphenol isomers (xylenols) generally occur together in natural products, industrial processes, commercial products, and phenolic wastes. Therefore, data are not available for human exposure to 2,4-DMP alone. In addition to this, most mammalian tests for toxicity of individual dimethylphenol isomers have been conducted with isomers other than 2,4-DMP.

In general, the mixtures of phenol, methylphenols, and dimethylphenols contain compounds which produced acute poisoning in laboratory animals. Symptoms were difficult breathing, rapid muscular spasms, disturbance of motor coordination, and asymmetrical body position. In a 1977 National Academy of Science publication the conclusion was reached that, "In view of the relative paucity of data on the mutagenicity, carcinogenicity, teratogenicity, and long term oral toxicity of 2,4-dimethylphenol, estimates of the effects of chronic oral exposure at low levels cannot be made with any confidence." No ambient water quality criterion can be set at this time. In order to protect public health, exposure to this compound should be minimized as soon as possible.

Toxicity data for fish and freshwater aquatic life are limited; however, in reported studies of 2,4-dimethylphenol at concentrations as high as 2 mg/l no adverse effects were observed.

The behavior of 2,4-DMP in a POTW has not been studied. As a weak acid, its behavior may be somewhat dependent on the pH of the influent to the POTW. However, over the normal limited range of POTW pH, little effect of pH would be expected.

Biological degradability of 2,4-DMP as determined in one study, showed 94.5 percent removal based on chemical oxygen demand (COD). Thus, substantial removal is expected for this compound. Another study determined that persistance of 2,4-DMP in the environment is low, and thus any of the compound which remained in the sludge or passed through the POTW into the effluent would be degraded within moderate length of time (estimated as two months in the report).

2,4-Dinitrotoluene (35). 2,4-Dinitrotoluene [$(NO_2)_2C_6H_4CH_3$], a yellow crystalline compound, is manufactured as a coproduct with the 2,6-isomer by nitration of nitrotoluene. It melts at 71°C. 2,4-Dinitrotoluene is insoluble in water (0.27 g/l at 22°C) and soluble in a number of organic solvents. Production data for the 2,4-isomer alone are not available. The 2,4-and 2,6-isomers are manufactured in an 80:20 or 65:35 ratio, depending on the process used. Annual U.S. commercial production is about 150 thousand tons of the two isomers. Unspecified amounts are produced by the U.S. government and further nitrated to trinitrotoluene (TNT) for military use. The major use of the dinitrotoluene mixture is for production of toluene diisocyanate used to make polyurethanes. Another use is in production of dyestuffs.

The toxic effect of 2,4-dinitrotoluene in humans is primarily methemoglobinemia (a blood condition hindering oxygen transport by the blood). Symptoms depend on severity of the disease, but include cyanosis, dizziness, pain in joints, headache, and loss of appetite in workers inhaling the compound. Laboratory animals fed oral doses of 2,4-dinitrotoluene exhibited many of the same symptoms. Aside from the effects in red blood cells, effects are observed in the nervous system and testes.

Chronic exposure to 2,4-dinitrotoluene may produce liver damage and reversible anemia. No data were found on teratogenicity of this compound. Mutagenic data are limited and are regarded as confusing. Data resulting from studies of carcinogenicity of 2,4-dinitrotoluene point to a need for further testing for this property.

For the maximum protection of human health from the potential carcinogenic effects of exposure to 2,4-dinitrotoluene through ingestion of water and contaminated aquatic organisms, the ambient water concentration is zero. Concentrations of 2,4-dinitrotoluene estimated to result in additional lifetime cancer

risk at risk levels of 10^{-7}, 10^{-6}, and 10^{5} are 0.0074 mg/l, 0.074 mg/l, and 0.740 mg/l, respectively.

Data on the behavior of 2,4-dinitrotoluene in a POTW are not available. However, biochemical oxidation of 2,4-dinitrophenol was investigated on a laboratory scale. At 100 mg/l of 2,4-dinitrotoluene, a concentration considerably higher than that expected in municipal wastewaters, biochemical oxidation by an acclimated, phenol-adapted seed culture produced 52 percent degradation in three hours. Based on this limited information and general observations relating molecular structure to ease of degradation for all the toxic organic pollutants, it was concluded that biological treatment in a POTW removes 2,4-dinitrotoluene to a high degree or completely. No information is available regarding possible interference by 2,4-dinitrotoluene in POTW treatment processes, or on the possible detrimental effect on sludge used to ammend soils in which food crops are grown.

Ethylbenzene (38). Ethylbenzene is a colorless, flammable liquid manufactured commercially from benzene and ethylene. Approximately half of the benzene used in the U.S. goes into the manufacture of more than three million tons of ethylbenzene annually. Ethylbenzene boils at 136°C and has a vapor pressure of 7 mm Hg at 20°C. It is slightly soluble in water (0.14 g/l at 15°C) and is very soluble in organic solvents.

About 98 percent of the ethylbenzene produced in the U.S. goes into the production of styrene, much of which is used in the plastics and synthetic rubber industries. Ethylbenzene is a constituent of xylene mixtures used as diluents in the paint industry, agricultural insecticide sprays, and gasoline blends.

Although humans are exposed to ethylbenzene from a variety of sources in the environment, little information on effects of ethylbenzene in man or animals is available. Inhalation can irritate eyes, affect the respiratory tract, or cause vertigo. In laboratory animals ethylbenzene exhibited low toxicity. There are no data available on teratogenicity, mutagenicity, or carcinogenicity of ethylbenzene.

Criteria are based on data derived from inhalation exposure limits. For the protection of human health from the toxic properties of ethylbenzene ingested through water and contaminated aquatic organisms, the ambient water quality criterion is 1.1 mg/l.

The behavior of ethylbenzene in a POTW has not been studied in detail. Laboratory scale studies of the biochemical oxidation of ethylbenzene at concentrations greater than would normally be found in municipal wastewaters have demonstrated varying degrees of degradation. In one study with phenol-acclimated seed cultures, 27 percent degradation was observed in a half day at 250 mg/l ethylbenzene. Another study at unspecified conditions showed 32, 38, and 45 percent degradation after 5, 10, and 20 days, respectively. Based on these results and general observations relating molecular structure of degradation, the conclusion is reached that biological treatment produces only moderate removal of ethylbenzene in a POTW by degradation.

Other studies suggest that most of the ethybenzene entering a POTW is removed from the aqueous stream to the sludge. The ethylbenzene contained in the sludge removed from the POTW may volatilize.

Fluoranthene (39). Fluoranthene (1,2-benzacenaphthene) is one of the compounds called polynuclear aromatic hydrocarbons (PAH). A pale yellow solid at room temperature, it melts at 111°C and has a negligible vapor pressure at 25°C. Water solubility is low (0.2 mg/l). Its molecular formula is $C_{16}H_{10}$.

Fluoranthene, along with many other PAH's, is found throughout the environment. It is produced by pyrolytic processing of organic raw materials, such as coal and petroleum, at high temperature (coking processes). It occurs naturally as a product of plant biosyntheses. Cigarette smoke contains fluoranthene. Although it is not used as the pure compound in industry, it has been found at relatively higher concentrations (0.002 mg/l) than most other PAH's in at least one industrial effluent. Furthermore, in a 1977 EPA survey to determine levels of PAH in U.S. drinking water supplies, none of the 110 samples analyzed showed any PAH other than fluoranthene.

Experiments with laboratory animals indicate that fluoranthene presents a relatively low degree of toxic potential from acute exposure, including oral administration. Where death occurred, no information was reported concerning target organs or specific cause of death.

There is no epidemiological evidence to prove that PAH in general, and fluoranthene, in particular, present in drinking water are related to the development of cancer. The only studies directed toward determining carcinogenicity of fluoranthene have been skin tests on laboratory animals. Results of these tests show that fluoranthene has no activity as a complete carcinogen (i.e., an agent which produces cancer when applied by itself),

but exhibits significant cocarcinogenicity (i.e., in combination with a carcinogen, it increases the carcinogenic activity).

Based on the limited animal study data, and following an established procedure, the ambient water quality criterion for fluoranthene alone (not in combination with other PAH) is determined to be 200 mg/l for the protection of human health from its toxic properties.

There are no data on the chronic effects of fluoranthene on freshwater organisms. One saltwater invertebrate shows chronic toxicity at concentrations below 0.016 mg/l. For some freshwater fish species the concentrations producing acute toxicity are substantially higher, but data are very limited.

Results of studies of the behavior of fluoranthene in conventional sewage treatment processes found in a POTW have been published. Removal of fluoranthene during primary sedimentation was found to be 62 to 66 percent (from an initial value of 0.00323 to 0.04435 mg/l to a final value of 0.00122 to 0.0146 mg/l), and the removal was 91 to 99 percent (final values of 0.00028 to 0.00026 mg/l) after biological purification with activated sludge processes.

A review was made of data on biochemical oxidation of many of the toxic organic pollutants investigated in laboratory scale studies at concentrations higher than would normally be expected in municipal wastewaters. General observations relating molecular structure to ease of degradation have been developed for all of these pollutants. The conclusion reached by study of the limited data is that biological treatment produces little or no degradation of fluoranthene. The same study, however, concludes that fluoranthene would be readily removed by filtration and oil-water separation and other methods which rely on water insolubility, or adsorption on other particulate surfaces. This latter conclusion is supported by the previously cited study showing significant removal by primary sedimentation.

No studies were found to give data on either the possible interference of fluoranthene with POTW operation, or the persistance of fluoranthene in sludges or POTW effluent waters. Several studies have documented the ubiquity of fluoranthene in the environment and it cannot be readily determined if this results from persistence of anthropogenic fluoranthene or the replacement of degraded fluoranthene by natural processes such as biosynthesis in plants.

Methylene Chloride (44). Methylene chloride, also called dichloromethane (CH_2Cl_2), is a colorless liquid manufactured by

chlorination of methane or methyl chloride followed by separation from the higher chlorinated methanes formed as coproducts. Methylene chloride boils at 40°C, and has a vapor pressure of 362 mm Hg at 20°C. It is slightly soluble in water (20 g/l at 20°C), and very soluble in organic solvents. U.S. annual production is about 250,000 tons.

Methylene chloride is a common industrial solvent found in insecticides, metal cleaners, paint, and paint and varnish removers.

Methylene chloride is not generally regarded as highly toxic to humans. Most human toxicity data are for exposure by inhalation. Inhaled methylene chloride acts as a central nervous system depressant. There is also evidence that the compound causes heart failure when large amounts are inhaled.

Methylene chloride does produce mutation in tests for this effect. In addition, a bioassay recognized for its extremely high sensitivity to strong and weak carcinogens produced results which were marginally significant. Thus potential carcinogenic effects of methylene chloride are not confirmed or denied, but are under continuous study. Difficulty in conducting and interpreting the test results from the low boiling point (40°C) of methylene chloride which increases the difficulty of maintaining the compound in growth media during incubation at 37°C; and from the difficulty of removing all impurities, some of which might themselves be carcinogenic.

For the protection of human health from the toxic properties of methylene chloride ingested through water and contaminated aquatic organisms, the ambient water criterion is 0.002 mg/l. The behavior of methylene chloride in a POTW has not been studied in any detail. However, the biochemical oxidation of this compound was studied in one laboratory scale study at concentrations higher than those expected to be contained by most municipal wastewaters. After five days no degradation of methylene chloride was observed. The conclusion reached is that biological treatment produces little or no removal by degradation of methylene chloride in a POTW.

The high vapor pressure of methylene chloride is expected to result in volatilization of the compound from aerobic treatment steps in a POTW. It has been reported that methylene chloride inhibits anerobic processes in a POTW. Methylene chloride that is not volatilized in the POTW is expected to pass through into the effluent.

Isophorone (54). Isophorone is an industrial chemical produced at a level of tens of millions of pounds annually in the U.S. The chemical name for isophorone is 3,5,5-trimethyl-2-cyclohexen-1-one and it is also known as trimethyl cyclohexanone and isoacetophorone. The formula is $C_6H_5(CH_3)_3O$. Normally, it is produced as the gamma isomer; technical grades contain about 3 percent of the beta isomer (3,5,5-trimethyl-3-cyclohexen-1-one). The pure gamma isomer is a water-white liquid, with vapor pressure less than 1 mm Hg at room temperature, and a boiling point of 215.2°C. It has a camphor- or peppermint-like odor and yellows upon standing. It is slightly soluble (12 mg/l) in water and dissolves in fats and oils.

Isophorone is synthesized from acetone and is used commercially as a solvent or cosolvent for finishes, lacquers, polyvinyl and nitrocellulose resins, pesticides, herbicides, fats, oils, and gums. It is also used as a chemical feedstock.

Because isophorone is an industrially used solvent, most toxicity data are for inhalation exposure. Oral administration to laboratory animals in two different studies revealed no acute or chronic effects during 90 days, and no hematological or pathological abnormalities were reported. Apparently, no studies have been completed on the carcinogenicity of isophorone.

Isophorone does undergo bioconcentration in the lipids of aquatic organisms and fish.

Based on subacute data, the ambient water quality criterion for isophorone ingested through consumption of water and fish is set at 460 mg/l for the protection of human health from its toxic properties.

Studies of the effects of isophorone on fish and aquatic organisms reveal relatively low toxicity, compared to some other toxic pollutants.

The behavior of isophorone in a POTW has not been studied. However, the biochemical oxidation of many of the toxic organic pollutants has been investigated in laboratory scale studies at concentrations higher than would normally be expected in municipal wastewaters. General observations relating molecular structure to ease of degradation have been developed for all of these pollutants. The conclusion reached by the study of the limited data is that biochemical treatment in a POTW produces moderate removal of isophorone. This conclusion is consistent with the findings of an experimental study of microbiological degradation of isophorone which showed about 45 percent oxidation in 15 to 20 days in domestic wastewater, but only 9 percent in salt water.

No data were found on the persistence of isophorone in sewage sludge.

Naphthalene (55). Naphthalene is an aromatic hydrocarbon with two orthocondensed benzene rings and a molecular formula of $C_{10}H_8$. As such it is properly classed as a polynuclear aromatic hydrocarbon (PAH). Pure naphthalene is a white crystalline solid melting at 80°C. For a solid, it has a relatively high vapor pressure (0.05 mm Hg at 20°C), and moderate water solubility (19 mg/l at 20°C). Napthalene is the most abundant single component of coal tar. Production is more than a third of a million tons annually in the U.S. About three fourths of the production is used as feedstock for phthalic anhydride manufacture. Most of the remaining production goes into manufacture of insecticide, dyestuffs, pigments, and pharmaceuticals. Chlorinated and partially hydrogenated naphthalenes are used in some solvent mixtures. Naphthalene is also used as a moth repellent.

Naphthalene, ingested by humans, has reportedly caused vision loss (cataracts), hemolytic anemia, and occasionally, renal disease. These effects of naphthalene ingestion are confirmed by studies on laboratory animals. No carcinogenicity studies are available which can be used to demonstrate carcinogenic activity for naphthalene. Naphthalene does bioconcentrate in aquatic organisms.

For the protection of human health from the toxic properties of naphthalene ingested through water and through contaminated aquatic organisms, the ambient water criterion is determined to be 143 mg/l.

Only a limited number of studies have been conducted to determine the effects of naphthalene on aquatic organisms. The data from those studies show only moderate toxicity.

Naphthalene has been detected in sewage plant effluents at concentrations up to 0.022 mg/l in studies carried out by the U.S. EPA. Influent levels were not reported. The behavior of naphthalene in a POTW has not been studied. However, recent studies have determined that naphthalene will accumulate in sediments at 100 times the concentration in overlying water. These results suggest that naphthalene will be readily removed by primary and secondary settling in a POTW, if it is not biologically degraded.

Biochemical oxidation of many of the toxic organic pollutants has been investigated in laboratory scale studies at concentrations higher than would normally be expected in municipal wastewaters. General observations relating molecular structure to ease of

degradation have been developed for all of these pollutants. The conclusion reached by study of the limited data is that biological treatment produces a high removal by degradation of naphthalene. One recent study has shown that microorganisms can degrade naphthalene, first to a dihydro compound, and ultimately to carbon dioxide and water.

4-Nitrophenol (58). 4-Nitrophenol ($NO_2C_6H_4OH$), also called paranitrophenol, is a colorless to yellowish crystalline solid manufactured commercially by hydrolysis of 4-chloro-nitrobenzene with aqueous sodium hydroxide. 4-Nitrophenol melts at 114°C. Vapor pressure is not cited in the usual sources. 4-Nitrophenol is slightly soluble in water (15 g/l at 25°C) and soluble in organic solvents. This phenol does not react to give a color with 4-aminoantipyrene, and therefore does not contribute to the nonconventional pollutant parameter "Total Phenols." U.S. annual production is about 20,000 tons.

Paranitrophenol is used to prepare phenetidine, acetaphenetidine, azo and sulfur dyes, photochemicals, and pesticides.

The toxic effects of 4-nitrophenol on humans have not been extensively studied. Data from experiments with laboratory animals indicate that exposure to this compound results in methmoglobinemia (a metabolic disorder of blood), shortness of breath, and stimulation followed by depression. Other studies indicate that the compound acts directly on cell membranes, and inhibits certain enzyme systems *in vitro*. No information regarding potential teratogenicity was found. Available data indicate that this compound does not pose a mutagenic hazard to humans. Very limited data for 4-nitrophenol do not reveal potential carcinogenic effects, although the compound has been selected by the national cancer institute for testing under the Carcinogenic Bioassay Program.

No U.S. standards for exposure to 4-nitrophenol in ambient water have been established.

Data on the behavior of 4-nitrophenol in a POTW are not available. However, laboratory scale studies have been conducted at concentrations higher than those expected to be found in municipal wastewaters. Biochemical oxidation using adapted cultures from various sources produced 95 percent degradation in three to six days in one study. Similar results were reported for other studies. Based on these data, and on general observations relating molecular structure to ease of biological oxidation, it is concluded that complete or nearly complete removal of 4-nitrophenol occurs during biological treatment in a POTW.

2,4,-Dinitrophenol (59). 2,4-Dinitrophenol [(NO) C H OH], a yellow crystalline solid, is manufactured commercially by hydrolysis of 2,4-dinitro-1-chlorobenzene with sodium hydroxide. 2,4-Dinitrophenol sublimes at 114°C. Vapor pressure is not cited in usual sources. It is slightly soluble in water (7.0 g/l at 25°C) and soluble in organic solvents. This phenol does not react with 4-aminoantipyrene and therefore does not contribute to the nonconventional pollutant parameter "Total Phenols." U.S. annual production is about 500 tons.

2,4-Dinitrophenol is used to manufacture sulfur and azo dyes, photochemicals, explosives, and pesticides.

The toxic effects of 2,4-dinitrophenol in humans is generally attributed to their ability to uncouple oxidative phosphorylation. In brief, this means that sufficient 2,4-dinitrophenol short-circuits cell metabolism by preventing utilization of energy provided by respiration and glycolysis. Specific symptoms are gastrointestinal disturbances, weakness, dizziness, headache, and loss of weight. More acute poisoning includes symptoms such as: burning thirst, agitation, irregular breathing, and abnormally high fever. This compound also inhibits other enzyme systems; and acts directly on the cell membrane, inhibiting chloride permeability. Ingestion of 2,4-dinitrophenol also causes cataracts in humans.

Based on available data it appears unlikely that 2,4-dinitrophenol poses a teratogenic hazard to humans. Results of studies of mutagenic activity of this compound are inconclusive as far as humans are concerned. Available data suggest that 2,4-dinitrophenol does not possess carcinogenic properties.

To protect human health from the adverse effects of 2,4-dinitrophenol ingested in contaminated water and fish, the suggested water quality criterion is 0.0686 mg/l .

Data on the behavior of 2,4-dinitrophenol in a POTW are not available. However, laboratory scale studies have been conducted at concentrations higher than those expected to be found in municipal wastewaters. Biochemical oxidation using a phenol-adapted seed culture produced 92 percent degradation in 3.5 hours. Similar results were reported for other studies. Based on these data, and on general observations relating molecular structure to ease of biological oxidation, it is concluded that complete or nearly complete removal of 2,4-dinitrophenol occurs during biological treatment in a POTW.

N-nitrosodiphenylamine (62). N-nitrosodiphenylamine [$(C_6H_5)_2NNO$], also called nitrous diphenylamide, is a

yellow crystalline solid manufactured by nitrosation of diphenylamine. It melts at 66°C and is insoluble in water, but soluble in several organic solvents other than hydrocarbons. Production in the U.S. has approached 1,500 tons per year. The compound is used as a retarder for rubber vulcanization and as a pesticide for control of scorch (a fungus disease of plants).

N-nitroso compounds are acutely toxic to every animal species tested and are also poisonous to humans. N-nitrosodiphenylamine toxicity in adult rats lies in the mid range of the values for 60 N-nitroso compounds tested. Liver damage is the principal toxic effect. N-nitrosodiphenylamine, unlike many other N-nitrosoamines, does not show mutagenic activity. N-nitrosodiphenylamine has been reported by several investigations to be non-carcinogenic. However, the compound is capable of trans-nitrosation and could thereby convert other amines to carcinogenic N-nitrosoamines. Sixty-seven of 87 N-nitrosoamines studied were reported to have carcinogenic activity. No water quality criterion have been proposed for N-nitrosodiphenylamine.

No data are available on the behavior of N-nitrosodiphenylamine in a POTW. Biochemical oxidation of many of the toxic organic pollutants have been investigated, at least in laboratory scale studies, at concentrations higher than those expected to be contained in most municipal wastewaters. General observations have been developed relating molecular structure to ease of degradation for all the toxic organic pollutants. The conclusion reached by study of the limited data is that biological treatment produces little or no removal of N-nitrosodiphenylamine in a POTW. No information is available regarding possible interference by N-nitrosodiphenylamine in POTW processes, or on the possible detrimental effect on sludge used to amend soils in which crops are grown. However, no interference or detrimental effects are expected because N-nitroso compounds are widely distributed in the soil and water environment, at low concentrations, as a result of microbial action on nitrates and nitrosatable compounds.

Pentachlorophenol (64). Pentachlorophenol (C_6Cl_5OH) is a white crystalline solid produced commercially by chlorination of phenol or polychlorophenols. U.S. annual production is in excess of 20,000 tons. Pentachlorophenol melts at 190°C and is slightly soluble in water (14 mg/l). Pentachlorophenol is not detected by the 4-amino antipyrene method.

Pentachlorophenol is a bactericide and fungicide and is used for preservation of wood and wood products. It is competitive with creosote in that application. It is also used as a preservative

in glues, starches, and photographic papers. It is an effective algicide and herbicide.

Although data are available on the human toxicity effects of pentachlorophenol, interpretation of data is frequently uncertain. Occupational exposure observations must be examined carefully because exposure to pentachlorophenol is frequently accompanied by exposure to other wood preservatives. Additionally, experimental results and occupational exposure observations must be examined carefully to make sure that observed effects are produced by the pentachlorophenol itself and not by the by-products which usually contaminate pentachlorophenol.

Acute and chronic toxic effects of pentachlorophenol in humans are similar; muscle weakness, headache, loss of appetite, abdominal pain, weight loss, and irritation of skin, eyes, and respiratory tract. Available literature indicates that pentachlorophenol does not accumulate in body tissues to any significant extent. Studies on laboratory animals of distribution of the compound in body tissues showed the highest levels of pentachlorophenol in liver, kidney, and intestine, while the lowest levels were in brain, fat, muscle, and bone.

Toxic effects of pentachlorophenol in aquatic organisms are much greater at pH 6 where this weak acid is predominantly in the undissociated form than at pH 9 where the ionic form predominates. Similar results were observed in mammals where oral lethal doses of pentachlorophenol were lower when the compound was administered in hydrocarbon solvents (un-ionized form) than when it was administered as the sodium salt (ionized form) in water.

There appear to be no significant teratogenic, mutagenic, or carcinogenic effects of pentachlorophenol.

For the protection of human health from the toxic properties of pentachlorophenol ingested through water and through contaminated aquatic organisms, the ambient water quality criterion is determined to be 0.140 mg/l.

Only limited data are available for reaching conclusions about the behavior of pentachlorophenol in a POTW. Pentachlorophenol has been found in the influent to a POTW. In a study of one POTW the mean removal was 59 percent over a seven day period. Trickling filters removed 44 percent at the influent pentachlorophenol, suggesting that biological degradation occurs. The same report compared removal of pentachlorophenol at the same plant and two additional POTW facilities on a later date and obtained values of

4.4, 19.5 and 28.6 percent removal, the last value being for the plant which was 59 percent removal in the original study. Influent concentrations of pentachlorophenol ranged from 0.0014 to 0.0046 mg/l. Other studies, including the general review of data relating molecular structure to biological oxidation, indicate that pentachlorophenol is not removed by biological treatment processes in a POTW. Anaerobic digestion processes are inhibited by 0.4 mg/l pentachlorophenol.

The low water solubility and low volatility of pentachlorophenol lead to the expectation that most of the compound will remain in the sludge in a POTW. The effect on plants grown on land treated with pentachlorophenol-containing sludge is unpredictable. Laboratory studies show that this compound affects crop germination at 5.4 mg/l. However, photodecomposition of pentachlorophenol occurs in sunlight. The effects of the various breakdown products which may remain in the soil was not found in the literture.

Phenol (65). Phenol, also called hydroxybenzene and carbolic acid, is a clear, colorless, hygroscopic, deliquescent, crystalline solid at room temperature. Its melting point is 43°C and its vapor pressure at room temperature is 0.35 mm Hg. It is very soluble in water (67 gm/l at 16°C) and can be dissolved in benzene, oils, and petroleum solids. Its formula is C_6H_5OH.

Although a small percent of the annual production of phenol is derived from coal tar as a naturally occuring product, most of the phenol is synthesized. Two of the methods are fusion of benzene sulfonate with sodium hydroxide, and oxidation of cumene followed by cleavage with a catalyst. Annual production in the U.S. is in excess of one million tons. Phenol is generated during distillation of wood and the microbiological decomposition of organic matter in the mammalian intestinal tract.

Phenol is used as a disinfectant, in the manufacture of resins, dyestuffs, and in pharmaceuticals, and in the photo processing industry. In this discussion, phenol is the specific compound which is separated by methylene chloride extraction of an acidified sample and identified and quantified by GC/MS. Phenol also contributes to the "Total Phenols," discussed elsewhere which are determined by the 4-AAP colorimetric method.

Phenol exhibits acute and sub-acute toxicity in humans and laboratory animals. Acute oral doses of phenol in humans cause sudden collapse and unconsciousness by its action on the central nervous system. Death occurs by respiratory arrest. Sub-acute

oral doses in mammals are rapidly absorbed and quickly distributed to various organs, then cleared from the body by urinary excretion and metabolism. Long term exposure by drinking phenol contaminated water has resulted in statistically significant increase in reported cases of diarrhea, mouth sores, and burning of the mouth. In laboratory animals, long term oral administration at low levels produced slight liver and kidney damage. No reports were found regarding carcinogenicity of phenol administered orally - all carcinogenicity studies were skin test.

For the protection of human health from phenol ingested through water and through contaminated aquatic organisms, the concentration in water should not exceed 3.4 mg/l.

Fish and other aquatic organisms demonstrated a wide range of sensitivities to phenol concentration. However, acute toxicity values were at moderate levels when compared to other toxic organic pollutants.

Data have been developed on the behavior of phenol in a POTW. Phenol is biodegradable by biota present in a POTW. The ability of a POTW to treat phenol-bearing influents depends upon acclimation of the biota and the constancy of the phenol concentration. It appears that an induction period is required to build up the population of organisms which can degrade phenol. Too large a concentration will result in upset or pass though in the POTW, but the specific level causing upset depends on the immediate past history of phenol concentrations in the influent. Phenol levels as high as 200 mg/l have been treated with 95 percent removal in a POTW, but more or less continuous presence of phenol is necessary to maintain the population of microorganisms that degrade phenol.

Phenol which is not degraded is expected to pass through the POTW because of its very high water solubility. However, in a POTW where chlorination is practiced for disinfection of the POTW effluent, chlorination of phenol may occur. The products of that reaction may be toxic pollutants.

The EPA has developed data on influent and effluent concentrations of total phenols in a study of 103 POTW facilities. However, the analytical procedure was the 4-AAP method mentioned earlier and not the GC/MS method specifically for phenol. Discussion of the study, which of course includes phenol, is presented under the pollutant heading "Total Phenols."

Phthalate Esters (66-71). Phthalic acid, or 1,2-benzenedicarboxylic acid, is one of three isomeric benzenedicarboxylic acids produced by the chemical industry. The other two isomeric

forms are called isophthalic and terephthalic acids. The formula for all three acids is $C_6H_4(COOH)_2$. Some esters of phthalic acid are designated as toxic pollutants. They will be discussed as a group here, and specific properties of individual phthalate esters will be discussed afterwards.

Phthalic acid esters are manufactured in the U.S. at an annual rate in excess of one billion pounds. They are used as plasticizers - primarily in the production of polyvinyl chloride (PVC) resins. The most widely used phthalate plasticizer is bis (2-ethylhexyl) phthalate (66) which accounts for nearly one-third of the phthalate esters produced. This particular ester is commonly referred to as dioctyl phthalate (DOP) and should not be confused with one of the less used esters, di-n-octyl phthalate (69), which is also used as a plasticizer. In addition to these two isomeric dioctyl phthalates, four other esters, also used primarily as plasticizers, are designated as toxic pollutants. They are: butyl benzyl phthalate (67), di-n-butyl phthalate (68), diethyl phthalate (70), and dimethyl phthalate (71).

Industrially, phthalate esters are prepared from phthalic anhydride and the specific alcohol to form the ester. Some evidence is available suggesting that phthalic acid esters also may be synthesized by certain plant and animal tissues. The extent to which this occurs in nature is not known.

Phthalate esters used as plasticizers can be present in concentrations up to 60 percent of the total weight of the PVC plastic. The plasticizer is not linked by primary chemical bonds to the PVC resin. Rather, it is locked into the structure of intermeshing polymer molecules and held by van der Waals forces. The result is that the plasticizer is easily extracted. Plasticizers are responsible for the odor associated with new plastic toys or flexible sheet that has been contained in a sealed package.

Although the phthalate esters are not soluble or are only very slightly soluble in water, they do migrate into aqueous solutions placed in contact with the plastic. Thus, industrial facilities with tank linings, wire and cable coverings, tubing, and sheet flooring of PVC are expected to discharge some phthalate esters in their raw waste. In addition to their use as plasticizers, phthalate esters are used in lubricating oils and pesticide carriers. These also can contribute to industrial discharge of phthalate esters.

From the accumulated data on acute toxicity in animals, phthalate esters may be considered as having a rather low order of toxicity. Human toxicity data are limited. It is thought that

the toxic effects of the esters is most likely due to one of the metabolic products, in particular the monoester. Oral acute toxicity in animals is greater for the lower molecular weight esters than for the higher molecular weight esters.

Orally administered phthalate esters generally produced enlarging of liver and kidney, and atrophy of testes in laboratory animals. Specific esters produced enlargement of heart and brain, spleenitis, and degeneration of central nervous system tissue.

Subacute doses administered orally to laboratory animals produced some decrease in growth and degeneration of the testes. Chronic studies in animals showed similar effects to those found in acute and subacute studies, but to a much lower degree. The same organs were enlarged, but pathological changes were not usually detected.

A recent study of several phthalic esters produced suggestive but not conclusive evidence that dimethyl and diethyl phthalates have a cancer liability. Only four of the six toxic pollutant esters were included in the study. Phthalate esters do bioconcentrate in fish. The factors, weighted for relative consumption of various aquatic and marine food groups, are used to calculate ambient water quality criteria for four phthalate esters. The values are included in the discussion of the specific esters.

Studies of toxicity of phthalate esters in freshwater and salt water organisms are scarce. A chronic toxicity test with bis(2-ethylhexyl) phthalate showed that significant reproductive impairment occurred at 0.003 mg/l in the freshwater crustacean, Daphnia magna. In acute toxicity studies, saltwater fish and organisms showed sensitivity differences of up to eight-fold to butyl benzyl, diethyl, and dimethyl phthalates. This suggests that each ester must be evaluated individually for toxic effects.

The behavior of phthalate esters in a POTW has not been studied. However, the biochemical oxidation of many of the toxic organic pollutants has been investigated in laboratory scale studies at concentrations higher than would normally be expected in municipal wastewaters. Three of the phthalate esters were studed. Bis(2-ethylhexyl) phthalate was found to be degraded slightly or not at all and its removal by biological treatment in a POTW is expected to be slight or zero. Di-n-butyl phthalate and diethyl phthalate were degraded to a moderate degree and their removal by biological treatment in a POTW is expected to occur to a moderate degree. Using these data and other observations relating molecular structure to ease of biochemical degradation of other toxic organic pollutants, the conclusion was reached that butyl benzyl

phthalate and dimethyl phthalate would be removed in a POTW to a moderate degree by biological treatment. On the same basis, it was concluded that di-n-octyl phthalate would be removed to a slight degree or not at all. An EPA study of seven POTW facilities revealed that for all but di-n-octyl phthalate, which was not studied, removals ranged from 62 to 87 percent.

No information was found on possible interference with POTW operation or the possible effects on sludge by the phthalate esters. The water insoluble phthalate esters - butyl benzyl and di-n-octyl phthalate - would tend to remain in sludge, whereas the other four toxic pollutant phthalate esters with water solubilities ranging from 50 mg/l to 4.5 mg/l would probably pass through into the POTW effluent.

Bis(2-ethylhexyl) phthalate (66). In addition to the general remarks and discussion on phthalate esters, specific information on bis(2-ethylhexyl) phthalate is provided. Little information is available about the physical properties of bis(2-ethylhexyl) phthalate. It is a liquid boiling at 387°C at 5mm Hg and is insoluble in water. Its formula is $C_6H_4(COOC_8H_{17})_2$.
This toxic pollutant constitutes about one-third of the phthalate ester production in the U.S. It is commonly referred to as dioctyl phthalate, or DOP, in the plastics industry where it is the most extensively used compound for the plasticization of polyvinyl chloride (PVC). Bis(2-ethylhexyl) phthalate has been approved by the FDA for use in plastics in contact with food. Therefore, it may be found in wastewaters coming in contact with discarded plastic food wrappers as well as the PVC films and shapes normally found in industrial plants. This toxic pollutant is also a commonly used organic diffusion pump oil, where its low vapor pressure is an advantage.

For the protection of human health from the toxic properties of bis(2-ethylhexyl) phthalate ingested through water and through contaminated aquatic organisms, the ambient water quality criterion is determined to be 15 mg/l. If contaminated aquatic organisms alone are consumed, excluding the consumption of water, the ambient water criteria is determined to be 50 mg/l.

Although the behavior of bis(2-ethylhexyl) phthalate in a POTW has not been studied, biochemical oxidation of this toxic pollutant has been studied on a laboratory scale at concentrations higher than would normally be expected in municipal wastewater. In fresh water with a non-acclimated seed culture no biochemical oxidation was observed after 5, 10, and 20 days. However, with an acclimated seed culture, biological oxidation occured to the extents of 13, 0, 6, and 23 percent of theoretical after 5, 10,

15 and 20 days, respectively. Bis(2-ethylhexyl) phthalate concentrations were 3 to 10 mg/l. Little or no removal of bis(2-ethylhexyl) phthalate by biological treatment in a POTW is expected.

Butyl Benzyl Phthalate (67). In addition to the general remarks and discussion on phthalate esters, specific information on butyl benzyl phthalate is provided. No information was found on the physical properties of this compound.

Butyl benzyl phthalate is used as a plasticizer for PVC. Two special applications differentiate it from other phthalate esters. It is approved by the U.S. FDA for food contact in wrappers and containers; and it is the industry standard for plasticization of vinyl flooring because it provides stain resistance.

No ambient water quality criterion is proposed for butyl benzyl phthalate.

Butyl benzyl phthalate removal in a POTW by biological treatment is expected to occur to a moderate degree.

Di-n-butyl Phthalate (68). In addition to the general remarks and discussion on phthalate esters, specific information on di-n-butyl phthalate (DBP) is provided. DBP is a colorless, oil liquid, boiling at 340°C. Its water solubility at room temperature is reported to be 0.4 g/l and 4.5 g/l in two different chemistry handbooks. The formula for DBP, $C_6H_4(COOC_4H_9)_2$ is the same as for its isomer, di-isobutyl phthalate. DBP production is 1 to 2 percent of total U.S. phthalate ester production.

Dibutyl phthalate is used to a limited extent as a plasticizer for polyvinyl chloride (PVC). It is not approved for contact with food. It is used in liquid lipsticks and as a diluent for polysulfide dental impression materials. DBP is used as a plasticizer for nitrocellulose in making gun powder, and as a fuel in solid propellants for rockets. Further uses are insecticides, safety glass manufacture, textile lubricating agents, printing inks, adhesives, paper coatings, and resin solvents.

For protection of human health from the toxic properties of dibutyl phthalate ingested through water and through contaminated aquatic organisms, the ambient water quality criterion is determined to be 34 mg/l. If contaminated aquatic organisms alone are consumed, excluding the consumption of water, the ambient water criterion is 154 mg/l.

Although the behavior of di-n-butyl phthalate in a POTW has not been studied, biochemical oxidation of this toxic pollutant has been studied on a laboratory scale at concentrations higher than would normally be expected in municipal wastewaters. Biochemical oxidation of 35, 43, and 45 percent of theoretical oxidation were obtained after 5, 10, and 20 days, respectively, using sewage microorganisms as an unacclimated seed culture.

Biological treatment in a POTW is expected to remove di-n-butyl phthalate to a moderate degree.

Di-n-octyl phthalate (69). In addition to the general remarks and discussion on phthalate esters, specific information on di-n-octyl phthalate is provided. Di-n-octyl phthalate is not to be confused with the isomeric bis(2-ethylhexyl) phthalate which is commonly referred to in the plastics industry as DOP. Di-n-octyl phthalate is a liquid which boils at 220°C at 5 mm Hg. It is insoluble in water. Its molecular formula is $C_6H_4(COOC_8H_{17})_2$. Its production constitutes about 1 percent of all phthalate ester production in the U.S.

Industrially, di-n-octyl phthalate is used to plasticize polyvinyl chloride (PVC) resins.

No ambient water quality criterion is proposed for di-n-octyl phthalate.

Biological treatment in a POTW is expected to lead to little or no removal of di-n-octyl phthalate.

Diethyl phthalate (70). In addition to the general remarks and discussion on phthalate esters, specific information on diethyl phthalate is provided. Diethyl phthalate, or DEP, is a colorless liquid boiling at 296°C, and is insoluble in water. Its molecular formula is $C_6H_4(COOC_2H_5)_2$. Production of diethyl phthalate constitutes about 1.5 percent of phthalate ester production in the U.S.

Diethyl phthalate is approved for use in plastic food containers by the U.S. FDA. In addition to its use as a polyvinyl chloride (PVC) plasticizer, DEP is used to plasticize cellulose nitrate for gun powder, to dilute polysulfide dental impression materials, and as an accelerator for dyeing triacetate fibers. An additional use which would contribute to its wide distribution in the environment is as an approved special denaturant for ethyl alcohol. The alcohol-containing products for which DEP is an approved denaturant include a wide range of personal care items such as bath preparations, bay rum, colognes, hair preparations,

face and hand creams, perfumes and toilet soaps. Additionally, this denaturant is approved for use in biocides, cleaning solutions, disinfectants, insecticides, fungicides, and room deoderants which have ethyl alcohol as part of the formulation. It is expected, therefore, that people and buildings would have some surface loading of this toxic pollutant which would find its way into raw wastewaters.

For the protection of human health from the toxic properties of diethyl phthalate ingested through water and through contaminated aquatic organisms, the ambient water quality criterion is determined to be 350 mg/l. If contaminated aquatic organisms alone are consumed, excluding the consumption of water, the ambient water criterion is 1,800 mg/l.

Although the behavior of diethyl phthalate in a POTW has not been studied, biochemical oxidation of this toxic pollutant has been studied on a laboratory scale at concentrations higher than would normally be expected in municipal wastewaters. Biochemical oxidation of 79, 84, and 89 percent of theoretical was observed after 5, 15, and 20 days respectively. Biological treatment in a POTW is expected to lead to a moderate degree of removal of diethyl phthalate.

Dimethyl Phthalate (71). In addition to the general remarks and discussion on phthalate esters, specific information on dimethyl phthalate (DMP) is provided. DMP has the lowest molecular weight of the phthalate esters - M.W. = 194 compared to M.W. of 391 for bis(2-ethylhexyl) phthalate. DMP has a boiling point of 282°C. It is a colorless liquid, soluble in water to the extent of 5 mg/l. Its molecular formula is $C_6H_4(C))CH_3)_2$.

Dimethyl phthalate production in the U.S. is just under one percent of total phthalate ester production. DMP is used to some extent as a plasticizer in cellulosics; however, its principal specific use is for dispersion of polyvinylidene fluoride (PVDF). PVDF is resistant to most chemicals and finds use as electrical insulation, chemical process equipment (particularly pipe), and as a case for long-life finishes for exterior metal siding. Coil coating techniques are used to apply PVDF dispersions to aluminum or galvanized steel siding.

For the protection of human health from the toxic properties of dimethyl phthalate ingested through water and through contaminated aquatic organisms, the ambient water criterion is determined to be 313 mg/l. If contaminated aquatic organisms alone are consumed, excluding the consumption of water, the ambient water criterion is 2,900 mg/l.

Based on limited data and observations relating molecular structure to ease of biochemical degradation of other toxic organic pollutants, it is expected that dimethyl phthalate will be biochemically oxidized to a lesser extent than domestic sewage by biological treatment in a POTW.

Polynuclear Aromatic Hydrocarbons (72-84). The polynuclear aromatic hydrocarbons (PAH) selected as toxic pollutants are a group of 13 compounds consisting of substituted and unsubstituted polycyclic aromatic rings. The general class of PAH includes heterocyclics, but none of those were selected as toxic pollutants. PAH are formed as the result of incomplete combustion when organic compounds are burned with insufficient oxygen. PAH are found in coke oven emissions, vehicular emissions, and volatile products of oil and gas burning. The compounds chosen as toxic pollutants are listed with their structural formula and melting point (m.p.). All are insoluble in water.

72 Benzo(a)anthracene (1,2-benzanthracene) m.p. 162°C

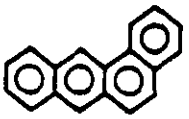

73 Benzo(a)pyrene (3,4-benzopyrene) m.p. 176°C

74 3,4-Benzofluoranthene m.p. 168°C

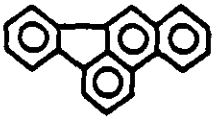

75 Benzo(k)fluoranthene (11,12-benzofluoranthene) m.p. 217°C

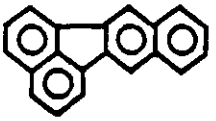

76 Chrysene (1,2-benzphenanthrene) m.p. 255°C

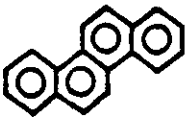

77 Acenaphthylene m.p. 92°C

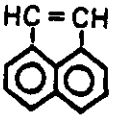

78 Anthracene m.p. 216°C

79 Benzo(ghi)perylene (1,12-benzoperylene) m.p. not reported

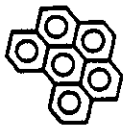

80 Fluorene (alpha-diphenylenemethane) m.p. 116°C

81 Phenanthrene m.p. 101°C

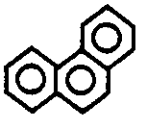

82 Dibenzo(a,h)anthracene (1,2,5,6-dibenzoanthracene) m.p. 269°C

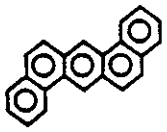

83 Indeno (1,2,3-cd)pyrene (2,3-o-phenylenepyrene) m.p. not available

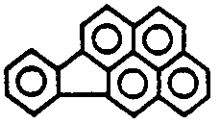

84 Pyrene m.p. 156°C

Some of these toxic pollutants have commercial or industrial uses. Benzo(a)anthracene, benzo(a)pyrene, chrysene, anthracene, dibenzo(a,h)anthracene, and pyrene are all used as antioxidants. Chrysene, acenaphthylene, anthracene, fluorene, phenanthrene, and pyrene are all used for synthesis of dyestuffs or other organic chemicals. 3,4-Benzofluoranthrene, benzo(k)fluoranthene, benzo-(ghi)perylene, and indeno (1,2,3-cd)pyrene have no known industrial uses, according to the results of a recent literature search.

Several of the PAH toxic pollutants are found in smoked meats, in smoke flavoring mixtures, in vegetable oils, and in coffee. Con-

sequently, they are also found in many drinking water supplies. The wide distribution of these pollutants in complex mixtures with the many other PAHs which have not been designated as toxic pollutants results in exposures by humans that cannot be associated with specific individual compounds.

The screening and verification analysis procedures used for the toxic organic pollutants are based on gas chromatography (GC). Three pairs of the PAH have identical elution times on the column specified in the protocol, which means that the parameters of the pair are not differentiated. For these three pairs [anthracene (78) - phenanthrene (81); 3,4-benzofluoranthene (74) - benzo(k)-fluoranthene (75); and benzo(a)anthracene (72) - chrysene (76)] results are obtained and reported as "either-or." Either both are present in the combined concentration reported, or one is present in the concentration reported.

There are no studies to document the possible carcinogenic risks to humans by direct ingestion. Air pollution studies indicate an excess of lung cancer mortality among workers exposed to large amounts of PAH containing materials such as coal gas, tars, and coke-oven emissions. However, no definite proof exists that the PAH present in these materials are responsible for the cancers observed.

Animal studies have demonstrated the toxicity of PAH by oral and dermal administration. The carcinogenicity of PAH has been traced to formation of PAH metabolites which, in turn, lead to tumor formation. Because the levels of PAH which induce cancer are very low, little work has been done on other health hazards resulting from exposure. It has been established in animal studies that tissue damage and systemic toxicity can result from exposure to non-carcinogenic PAH compounds.

Because there were no studies available regarding chronic oral exposures to PAH mixtures, proposed water quality criteria were derived using data on exposure to a single compound. Two studies were selected, one involving benzo(a)pyrene ingestion and one involving dibenzo(a,h)anthracene ingestion. Both are known animal carcinogens.

For the maximum protection of human health from the potential carcinogenic effects of expsure to polynuclear aromatic hydrocarbons (PAH) through ingestion of water and contaminated aquatic organisms, the ambient water concentration is zero. Concentrations of PAH estimated to result in additional risk of 1 in 100,000 were derived by the EPA and the Agency is considering setting criteria at an interim target risk level in the range of 10^{-7}, 10^{-6}, or 10^{-5} with corresponding criteria of 0.000000097 mg/1, 0.00000097 mg/1, and 0.0000097 mg/1, respectively.

No standard toxicity tests have been reported for freshwater or saltwater organisms and any of the 13 PAH discussed here.

The behavior of PAH in a POTW has received only a limited amount of study. It is reported that up to 90 percent of PAH entering a POTW will be retained in the sludge generated by conventional sewage treatment processes. Some of the PAH can inhibit bacterial growth when they are present at concentrations as low as 0.018 mg/l. Biological treatment in activated sludge units has been shown to reduce the concentration of phenanthrene and anthracene to some extent; however, a study of biochemical oxidation of fluorene on a laboratory scale showed no degradation after 5, 10, and 20 days. On the basis of that study and studies of other toxic organic pollutants, some general observations were made relating molecular structure to ease of degradation. Those observations lead to the conclusion that the 13 PAH selected to represent that group as toxic pollutants will be removed only slightly or not at all by biological treatment methods in a POTW. Based on their water insolubility and tendency to attach to sediment particles very little pass through of PAH to POTW effluent is expected.

No data are available at this time to support any conclusions about contamination of land by PAH on which sewage sludge containing PAH is spread.

Tetrachloroethylene (85). Tetrachloroethylene (CCl_2CCl_2), also called perchloroethylene and PCE, is a colorless, nonflammable liquid produced mainly by two methods - chlorination and pyrolysis of ethane and propane, and oxychlorination of dichloroethane. U.S. annual production exceeds 300,000 tons. PCE boils at 121°C and has a vapor pressure of 19 mm Hg at 20°C. It is insoluble in water but soluble in organic solvents.

Approximately two-thirds of the U.S. production of PCE is used for dry cleaning. Textile processing and metal degreasing, in equal amounts consume about one-quarter of the U.S. production.

The principal toxic effect of PCE on humans is central nervous system depression when the compound is inhaled. Headache, fatigue, sleepiness, dizziness, and sensations of intoxication are reported. Severity of effects increases with vapor concentration. High integrated exposure (concentration times duration) produces kidney and liver damage. Very limited data on PCE ingested by laboratory animals indicate liver damage occurs when PCE is administered by that route. PCE tends to distribute to fat in mammalian bodies.

One report found in the literature suggests, but does not conclude, that PCE is teratogenic. PCE has been demonstrated to be a liver carcinogen in B6C3-F1 mice.

For the maximum protection of human health from the potential carcinogenic effects of exposure to tetrachlorethylene through ingestion of water and contaminated aquatic organisms, the ambient water concentration is zero. Concentrations of tetrachloroethylene estimated to result in additional lifetime cancer risk levels of 10^{-7}, 10^{-6}, and 10^{-5} are 0.000020 mg/l, 0.00020 mg/l, and 0.0020 mg/l, respectively.

No data were found regarding the behavior of PCE in a POTW. Many of the toxic organic pollutants have been investigated, at least in laboratory scale studies, at concentrations higher than those expected to be contained by most municipal wastewaters. General observations have been developed relating molecular structure to ease of degradation for all of the toxic organic pollutants. The conclusions reached by the study of the limited data is that biological treatment produces a moderate removal of PCE in a POTW by degradation. No information was found to indicate that PCE accumulates in the sludge, but some PCE is expected to be adsorbed onto settling particles. Some PCE is expected to be volatilized in aerobic treatment processes and little, if any, is expected to pass through into the effluent from the POTW.

Toluene (86). Toluene is a clear, colorless liquid with a benzene-like odor. It is a naturally occuring compound derived primarily from petroleum or petrochemical processes. Some toluene is obtained from the manufacture of metallurgical coke. Toluene is also referred to as totuol, methylbenzene, methacide, and phenylmethane. It is an aromatic hydrocarbon with the formula $C_6H_5CH_3$. It boils at 111°C and has a vapor pressure of 30 mm Hg at room temperature. The water solubility of toluene is 535 mg/l, and it is miscible with a variety of organic solvents. Annual production of toluene in the U.S. is greater than two million metric tons. Approximately two-thirds of the toluene is converted to benzene and the remaining 30 percent is divided approximately equally into chemical manufacture, and use as a paint solvent and aviation gasoline additive. An estimated 5,000 metric tons is discharged to the environment anually as a constituent in wastewater.

Most data on the effects of toluene in human and other mammals have been based on inhalation exposure or dermal contact studies. There appear to be no reports of oral administration of toluene to human subjects. A long term toxicity study on female rats revealed no adverse effects on growth, mortality, appearance and behavior, organ to body weight ratios, blood-urea nitrogen levels, bone marrow counts, peripheral blood counts, or morphology of major organs. The effects of inhaled toluene on the central nervous system, both at high and low concentrations, have been studied in humans and animals. However, ingested toluene is expected to be handled differently by the body because it is absorbed more slowly and must first pass through the liver before

reaching the nervous system. Toluene is extensively and rapidly metabolized in the liver. One of the principal metabolic products of toluene is benzoic acid, which itself seems to have little potential to produce tissue injury.

Toluene does not appear to be teratogenic in laboratory animals or man. Nor is there any conclusive evidence that toluene is mutagenic. Toluene has not been demonstrated to be positive in any *in vitro* mutagenicity or carcinogenicity bioassay system, nor to be carcinogenic in animals or man.

Toluene has been found in fish caught in harbor waters in the vicinity of petroleum and petrochemical plants. Bioconcentration studies have not been conducted, but bioconcentration factors have been calculated on the basis of the octanol-water partition coefficient.

For the protection of human health from the toxic properties of toluene ingested through water and through contaminated aquatic organisms, the ambient water criterion is determined to be 14.3 mg/l. If contaminated aquatic organisms alone are consumed excluding the consumption of water, the ambient water criterion is 424 mg/l. Available data show that the adverse effects on aquatic life occur at concentrations as low as 5 mg/l.

Acute toxicity tests have been conducted with toluene and a variety of freshwater fish and *Daphnia magna*. The latter appears to be significantly more resistant than fish. No test results have been reported for the chronic effects of toluene on freshwater fish or invertebrate species.

No detailed study of toluene behavior in a POTW is available. However, the biochemical oxidation of many of the toxic pollutants has been investigated in laboratory scale studies at concentrations greater than those expected to be contained by most municipal wastewaters. At toluene concentrations ranging from 3 to 250 mg/l biochemical oxidation proceeded to 50 percent of theoretical or greater. The time period varied from a few hours to 20 days depending on whether or not the seed culture was acclimated. Phenol adapted acclimated seed cultures gave the most rapid and extensive biochemical oxidation.

Based on study of the limited data, it is expected that toluene will be biochemically oxidized to a lesser extent than domestic sewage by biological treatment in a POTW. The volatility and relatively low water solubility of toluene lead to the expectation that aeration processes will remove significant quantities of toluene from the POTW. The EPA studied toluene removal in seven POTW facilities. The removals ranged from 40 to 100 percent. Sludge concentrations of toluene ranged from 54×10^{-3} to 1.85 mg/l.

Trichloroethylene (87). Trichloroethylene (1,1,2-trichloroethylene or TCE) is a clear, colorless liquid boiling at 87°C. It has a vapor pressure of 77 mm Hg at room temperature and is slightly soluble in water (1 gm/l). U.S. production is greater than 0.25 million metric tons annually. It is produced from tetrachloroethane by treatment with lime in the presence of water.

TCE is used for vapor phase degreasing of metal parts, cleaning and drying electronic components, as a solvent for paints, as a refrigerant, for extraction of oils, fats, and waxes, and for dry cleaning. Its widespread use and relatively high volatility result in detectable levels in many parts of the environment.

Data on the effects produced by ingested TCE are limited. Most studies have been directed at inhalation exposure. Nervous system disorders and liver damage are frequent results of inhalation exposure. In the short term exposures, TCE acts as a central nervous system depressant - it was used as an anesthetic before its other long term effects were defined.

TCE has been shown to induce transformation in a highly sensitive *in vitro* Fischer rat embryo cell system (F1706) that is used for identifying carcinogens. Severe and persistent toxicity to the liver was recently demonstrated when TCE was shown to produce carcinoma of the liver in mouse strain B6C3F1. One systematic study of TCE exposure and the incidence of human cancer was based on 518 men exposed to TCE. The authors of that study concluded that although the cancer risk to man cannot be ruled out, exposure to low levels of TCE probably does not present a very serious and general cancer hazard.

TCE is bioconcentrated in aquatic species, making the consumption of such species by humans a significant source of TCE. For the protection of human health from the potential carcinogenic effects of exposure to trichloroethylene through ingestion of water and contaminated aquatic organisms, the ambient water concentration is zero. Concentrations of trichloroethylene estimated to result in additional lifetime cancer risks of 10^{-7}, 10^{-6}, and 10^{-5} are 2.7×10^{-4} mg/l, 2.7×10^{-3} mg/l, and 2.7×10^{-2} mg/l, respectively. If contaminated aquatic organisms alone are consumed, excluding the consumption of water, the water concentration should be less than 0.807 mg/l to keep the additional lifetime cancer risk below 10^{-5}.

Only a very limited amount of data on the effects of TCE on freshwater aquatic life are available. One species of fish (fathead minnows) showed a loss of equilibrium at concentrations below those resulting in lethal effects.

The behavior of trichloroethylene in a POTW has not been studied. However, in laboratory scale studies of toxic organic pollutants,

TCE was subjected to biochemical oxidation conditions. After 5, 10, and 20 days no biochemical oxidation occurred. On the basis of this study and general observations relating molecular structure to ease of degradation, the conclusion is reached that TCE would undergo no removal by biological treatment in a POTW. The volatility and relatively low water solubility of TCE is expected to result in volatilization of some of the TCE in aeration steps in a POTW.

Polychlorinated Biphenyls (106 - 112). Polychlorinated biphenyls ($C_{12}H_{10}nCln$,H_{10}-nCln where n can range from 1 to 10), designated PCB's, are chlorinated derivatives of biphenyls. The commercial products are complex mixtures of chlorobiphenyls, but are no longer produced in the U.S. The mixtures produced formerly were characterized by the percentage chlorination. Direct chlorination of biphenyl was used to produce mixtures containing from 21 to 70 percent chlorine. Seven of these mixtures have been selected as toxic pollutants:

Toxic Pollutant No.	Name	Percent Chlorine	Range (°C) Distillation	Pour Point (°C)	Water Solubility
	Arochlor				
106	1242	42	325-366	-19	240
107	1254	54	365-390	10	12
108	1221	20.5-21.5	275-320	1	<200
109	1232	31.4-32.5	290-325	-35.5	--
110	1248	48	340-375	- 7	54
111	1260	60	385-420	31	2.7
112	1016	41	323-356	--	225-250

The arochlors 1221, 1232, 1016, 1242, and 1248 are colorless, oily liquids; 1254 is a viscous liquid; 1260 is a sticky resin at room temperature. Total annual U.S. production of PCB's averaged about 20,000 tons in 1972 to 1974.

Prior to 1971, PCB's were used in several applications including plasticizers, heat transfer liquids, hydraulic fluids, lubricants, vacuum pump and compressor fluids, and capacitor and transformer oils. After 1970, when PCB use was restricted to closed systems, the latter two uses were the only commercial applications.

The toxic effects of PCB's ingested by humans have been reported to range from acne-like skin eruptions and pigmentation of the skin to numbness of limbs, hearing and vision problems, and spasms. Interpretation of results is complicated by the fact that the very highly toxic polychlorinated dibenzofurans (PCDF's) are found in many commercial PCB mixtures. Photochemical and

thermal decomposition appear to accelerate the transformation of PCB's to PCDF's. Thus the specific effects of PCB's may be masked by the effects of PCDF's. However, if PCDF's are frequently present to some extent in any PCB mixture, then their effects may be properly included in the effects of PCB mixtures.

Studies of effects of PCB's in laboratory animals indicate that liver and kidney damage, large weight losses, eye discharges, and interference with some metabolic processes occur frequently. Teratogenic effects of PCB's in laboratory animals have been observed, but are rare. Growth retardations during gestation, and reproductive failure are more common effects observed in studies of PCB teratogenicity. Carcinogenic effects of PCB's have been studied in laboratory animals with results interpreted as positive. Specific reference has been made to liver cancer in rats in the discussion of water quality criterion formulation.

For the maximum protection of human health from the potential carcinogenic effects of exposure to PCB's through ingestion of water and contaminated aquatic organisms, the ambient water concentration should be zero. Concentrations of PCB's estimated to result in additional lifetime cancer risk at risk levels of 10^{-7}, 10^{-6}, and 10^{-5} are 0.0000000026 mg/l, 0.000000026 mg/l, and 0.00000026 mg/l, respectively.

The behavior of PCB's in a POTW has received limited study. Most PCB's will be removed with sludge. One study showed removals of 82 to 89 percent, depending on suspended solid removal. The PCB's adsorb onto suspended sediments and other particulates. In laboratory scale experiments with PCB 1221, 81 percent was removed by degradation in an activated sludge system in 47 hours. Biodegradation can form polychlorinated dibenzofurans which are more toxic than PCB's (as noted earlier). PCB's at concentrations of 0.1 to 1,000 mg/l inhibit or enhance bacterial growth rates, depending on the bacterial culture and the percentage chlorine in the PCB. Thus, activated sludge may be inhibited by PCB's. Based on studies of bioaccumulation of PCB's in food crops grown on soils amended with PCB-containing sludge, the U.S. FDA has recommended a limit of 10 mg PCB/kg dry weight of sludge used for application to soils bearing food crops.

Antimony (114). Antimony (chemical name - stibium, symbol Sb), classified as a non-metal or metalloid, is a silvery white, brittle crystalline solid. Antimony is found in small ore bodies throughout the world. Principal ores are oxides of mixed antimony valences, and an oxysulfide ore. Complex ores with metals are important because the antimony is recovered as a by-product. Antimony melts at 631°C, and is a poor conductor of electricity and heat.

Annual U.S. consumption of primary antimony ranges from 10,000 to 20,000 tons. About half is consumed in metal products - mostly antimonial lead for lead acid storage batteries, and about half in non-metal products. A principal compound is antimony trioxide which is used as a flame retardant in fabrics, and as an opacifier in glass, ceramics, and enamels. Several antimony compounds are used as catalysts in organic chemicals synthesis, as fluorinating agents (the antimony fluoride), as pigments, and in fireworks. Semiconductor applications are economically significant.

Essentially no information on antimony-induced human health effects has been derived from community epidemiology studies. The available data are in literature relating effects observed with therapeutic or medicinal uses of antimony compounds and industrial exposure studies. Large therapeutic doses of antimonial compounds, usually used to treat schistisomiasis, have caused severe nausea, vomiting, convulsions, irregular heart action, liver damage, and skin rashes. Studies of acute industrial antimony poisoning have revealed loss of appetite, diarrhea, headache, and dizziness in addition to the symptoms found in studies of therapeutic doses of antimony.

For the protection of human health from the toxic properties of antimony ingested through water and through contaminated aquatic organisms the ambient water criterion is determined to be 0.146 mg/l. If contaminated aquatic organisms are consumed, excluding the consumption of water, the ambient water criterion is determined to be 45 mg/l. Available data show that adverse effects on aquatic life occur at concentrations higher than those cited for human health risks.

Very little information is available regarding the behavior of antimony in a POTW. The limited solubility of most antimony compounds expected in a POTW, i.e., the oxides and sulfides, suggests that at least part of the antimony entering a POTW will be precipitated and incorporated into the sludge. However, some antimony is expected to remain dissolved and pass through the POTW into the effluent. Antimony compounds remaining in the sludge under anaerobic conditions may be connected to stibine (SbH_3), a very soluble and very toxic compound. There are no data to show antimony inhibits any POTW processes. Antimony is not known to be essential to the growth of plants, and has been reported to be moderately toxic. Therefore, sludge containing large amounts of antimony could be detrimental to plants if it is applied in large amounts to cropland.

Arsenic (115). Arsenic (chemical symbol As), is classified as a non-metal or metalloid. Elemental arsenic normally exists in the alpha-crystalline metallic form which is steel gray and brittle, and in the beta form which is dark gray and amorphous. Arsenic sublimes at 615°C. Arsenic is widely distributed throughout the

world in a large number of minerals. The most important commercial source of arsenic is as a by-product from treatment of copper, lead, cobalt, and gold ores. Arsenic is usually marketed as the trioxide (As_2O_3). Annual U.S. production of the trioxide approaches 40,000 tons.

The principal use of arsenic is in agricultural chemicals (herbicides) for controlling weeds in cotton fields. Arsenicals have various applications in medicinal and vetrinary use, as wood preservatives, and in semiconductors.

The effects of arsenic in humans were known by the ancient Greeks and Romans. The principal toxic effects are gastrointestinal disturbances. Breakdown of red blood cells occurs. Symptoms of acute poisoning include vomiting, diarrhea, abdominal pain, lassitude, dizziness, and headache. Longer exposure produced dry, falling hair, brittle, loose nails, eczema, and exfoliation. Arsenicals also exhibit teratogenic and mutagenic effects in humans. Oral administration of arsenic compounds has been associated clinically with skin cancer for nearly one hundred years. Since 1888 numerous studies have linked occupational exposure and therapeutic administration of arsenic compounds to increased incidence of respiratory and skin cancer.

For the maximum protection of human health from the potential carcinogenic effects of exposure to arsenic through ingestion of water and contaminated aquatic organisms, the ambient water concentration is zero. Concentrations of arsenic estimated to result in additional lifetime cancer risk levels of 10^{-7}, 10^{-6}, and 10^{-5} are 2.2×10^{-7} mg/l, 2.2×10^{-6} mg/l, and 2.2×10^{-5} mg/l, respectively. If contaminated aquatic organisms alone are consumed, excluding the consumption of water, the water concentration should be less than 1.75×10^{-4} to keep the increased lifetime cancer risk below 10^{-5}. Available data show that adverse effects on aquatic life occur at concentrations higher than those cited for human health risks.

A few studies have been made regarding the behavior of arsenic in a POTW. One EPA survey of nine POTW facilities reported influent concentrations ranging from 0.0005 to 0.693 mg/l; effluents from three a POTW having biological treatment contained 0.0004 to 0.01 mg/l; two POTW facilities showed arsenic removal efficiencies of 50 and 71 percent in biological treatment. Inhibition of treatment processes by sodium arsenate is reported to occur at 0.1 mg/l in activated sludge, and 1.6 mg/l in anaerobic digestion processes. In another study based on data from 60 POTW facilities, arsenic in sludge ranged from 1.6 to 65.6 mg/kg and the median value was 7.8 mg/kg. Arsenic in sludge spread on cropland may be taken up by plants grown on that land. Edible plants can take up arsenic, but normally their growth is inhibited before the plants are ready for harvest.

Beryllium (117). Beryllium is a dark gray metal of the alkaline earth family. It is relatively rare, but because of its unique properties finds widespread use as an alloying element, especially for hardening copper which is used in springs, electrical contacts, and non-sparking tools. World production is reported to be in the range of 250 tons annually. However, much more reaches the environment as emissions from coal burning operations. Analysis of coal indicates an average beryllium content of 3 ppm and 0.1 to 1.0 percent in coal ash or fly ash.

The principal ores are beryl ($3BeO.Al_2O_3.6SiO_2$) and bertrandite [$Be_4Si_2O_7(OH)_2$]. Only two industrial facilities produce beryllium in the U.S. because of limited demand and the highly toxic character. About two-thirds of the annual production goes into alloys, 20 percent into heat sinks, and 10 percent into beryllium oxide (BeO) ceramic products.

Beryllium has a specific gravity of 1.846, making it the lightest metal with a high melting point (1,350°C). Beryllium alloys are corrosion resistant, but the metal corrodes in aqueous environments. Most common beryllium compounds are soluble in water, at least to the extent necessary to produce a toxic concentration of beryllium ions.

Most data on toxicity of beryllium is for inhalation of beryllium oxide dust. Some studies on orally administered beryllium in laboratory animals have been reported. Despite the large number of studies implicating beryllium as a carcinogen, there is no recorded instance of cancer being produced by ingestion. However, a recently convened panel of uninvolved experts concluded that epidemiologic evidence is suggestive that beryllium is a carcinogen in man.

In the aquatic environment beryllium is chronically toxic to aquatic organisms at 0.0053 mg/l. Water softness has a large effect on beryllium toxicity to fish. In soft water, beryllium is reportedly 100 times as toxic as in hard water.

For the maximum protection of human health from the potential carcinogenic effects of exposure to beryllium through ingestion of water and contaminated aquatic organisms the ambient water concentration is zero. Concentrations of beryllium estimated to result in additional lifetime cancer risk levels of 10^{-7}, 10^{-6}, and 10^{-5} are 0.00000068 mg/l, 0.0000068 mg/l, and 0.000068 mg/l, respectively. If contaminated aquatic organisms alone are consumed excluding the consumption of water, the concentration should be less than 0.00117 mg/l to keep the increased lifetime cancer risk below 10^{-5}.

Information on the behavior of beryllium in a POTW is scarce. Because beryllium hydroxide is insoluble in water, most beryllium

entering a POTW will probably be in the form of suspended solids. As a result most of the beryllium will settle and be removed with sludge. However, beryllium has been shown to inhibit several enzyme systems, to interfere with DNA metabolism in liver, and to induce chromosomal and mitotic abnormalities. This intereference in cellular processes may extend to interfere with biological treatment processes. The concentration and effects of beryllium in sludge which could be applied to cropland has not been studied.

Cadmium (118). Cadmium is a relatively rare metallic element that is seldom found in sufficient quantities in a pure state to warrant mining or extraction from the earth's surface. It is found in trace amounts of about 1 ppm throughout the earth's crust. Cadmium is, however, a valuable by-product of zinc production.

Cadmium is used primarily as an electroplated metal, and is found as an impurity in the secondary refining of zinc, lead, and copper.

Cadmium is an extremely dangerous cumulative toxicant, causing progressive chronic poisoning in mammals, fish, and probably other organisms. The metal is not excreted.

Toxic effects of cadmium on man have been reported from throughout the world. Cadmium may be a factor in the development of such human pathological conditions as kidney disease, testicular tumors, hypertension, arteriosclerosis, growth inhibition, chronic disease of old age, and cancer. Cadmium is normally ingested by humans through food and water as well as by breathing air contaminated by cadmium dust. Cadmium is cumulative in the liver, kidney, pancreas, and thyroid of humans and other animals. A severe bone and kidney syndrome known as itai-itai disease has been documented in Japan as caused by cadmium ingestion via drinking water and contaminated irrigation water. Ingestion of as little as 0.6 mg/day has produced the disease. Cadmium acts synergistically with other metals. Copper and zinc substantially increase its toxicity.

Cadmium is concentrated by marine organisms, particularly molluscs, which accumulate cadmium in calcareous tissues and in the viscera. A concentration factor of 1,000 for cadmium in fish muscle has been reported, as have concentration factors of 3,000 in marine plants and up to 29,600 in certain marine animals. The eggs and larvae of fish are apparently more sensitive than adult fish to poisoning by cadmium, and crustaceans appear to be more sensitive than fish eggs and larvae.

For the protection of human health from the toxic properties of cadmium ingested through water and through contaminated aquatic

organisms, the ambient water criterion is determined to be 0.010 mg/l. Available data show that adverse effects on aquatic life occur at concentrations in the same range as those cited for human health, and they are highly dependent on water hardness.

Cadmium is not destroyed when it is introduced into a POTW, and will either pass through to the POTW effluent or be incorporated into the POTW sludge. In addition, it can interfere with the POTW treatment process.

In a study of 189 POTW facilities, 75 percent of the primary plants, 57 percent of the trickling filter plants, 66 percent of the activated sludge plants, and 62 percent of the biological plants allowed over 90 percent of the influent cadmium to pass through to the POTW effluent. Only two of the 189 POTW facilities allowed less than 20 percent pass-through, and none less than 10 percent pass-through. POTW effluent concentrations ranged from 0.001 to 1.97 mg/l (mean 0.028 mg/l, standard deviation 0.167 mg/l).

Cadmium not passed through the POTW will be retained in the sludge where it is likely to build up in concentration. Cadmium contamination of sewage sludge limits its use on land since it increases the level of cadmium in the soil. Data show that cadmium can be incorporated into crops, including vegetables and grains, from contaminated soils. Since the crops themselves show no adverse effects from soils with levels up to 100 mg/kg cadmium, these contaminated crops could have a significant impact on human health. Two Federal agencies have already recognized the potential adverse human health effects posed by the use of sludge on cropland. The FDA recommends that sludge containing over 30 mg/kg of cadmium should not be used on agricultural land. Sewage sludge contains 3 to 300 mg/kg (dry basis) of cadmium mean = 10 mg/kg; median = 16 mg/kg. The USDA also recommends placing limits on the total cadmium from sludge that may be applied to land.

Chromium (119). Chromium is an elemental metal usually found as a chromite ($FeO.Cr_2O_3$). The metal is normally produced by reducing the oxide with aluminum. A significant proportion of the chromium used is in the form of compounds such as sodium dichromate (Na_2CrO_4), and chromic acid (CrO_3) - both are hexavalent chromium compounds.

Chromium is found as an alloying component of many steels and its compounds are used in electroplating baths, and as corrosion inhibitors for closed water circulation systems.

The two chromium forms most frequently found in industry wastewaters are hexavalent and trivalent chromium. Hexavalent chromium is the form used for metal treatments. Some of it is

reduced to trivalent chromium as part of the process reaction. The raw wastewater containing both valence states is usually treated first to reduce remaining hexavalent to trivalent chromium, and second to precipitate the trivalent form as the hydroxide. The hexavalent form is not removed by lime treatment.

Chromium, in its various valence states, is hazardous to man. It can produce lung tumors when inhaled, and induces skin sensitizations. Large doses of chromates have corrosive effects on the intestinal tract and can cause inflammation of the kidneys. Hexavalent chromium is a known human carcinogen. Levels of chromate ions that show no effect in man appear to be so low as to prohibit determination, to date.

The toxicity of chromium salts to fish and other aquatic life varies widely with the species, temperature, pH, valence of the chromium, and synergistic or antagonistic effects, especially the effect of water hardness. Studies have shown that trivalent chromium is more toxic to fish of some types than is hexavalent chromium. Hexavalent chromium retards growth of one fish species at 0.0002 mg/l. Fish food organisms and other lower forms of aquatic life are extremely sensitive to chromium. Therefore, both hexavalent and trivalent chromium must be considered harmful to particular fish or organisms.

For the protection of human health from the toxic properties of chromium (except hexavalent chromium) ingested through water and contaminated aquatic organisms, the ambient water quality criterion is 170 mg/l. If contaminated aquatic organisms alone are consumed, excluding the consumption of water, the ambient water criterion for trivalent chromium is 3,443 mg/l. The ambient water quality criterion for hexavalent chromium is recommended to be identical to the existing drinking water standard for total chromium which is 0.050 mg/l.

Chromium is not destroyed when treated by a POTW (although the oxidation state may change), and will either pass through to the POTW effluent or be incorporated into the POTW sludge. Both oxidation states can cause POTW treatment inhibition and can also limit the usefulness of municipal sludge.

Influent concentrations of chromium to POTW facilities have been observed by EPA to range from 0.005 to 14.0 mg/l, with a median concentration of 0.1 mg/l. The efficiencies for removal of chromium by the activated sludge process can vary greatly, depending on chromium concentration in the influent, and other operating conditions at the POTW. Chelation of chromium by organic matter and dissolution due to the presence of carbonates can cause deviations from the predicted behavior in treatment systems.

The systematic presence of chromium compounds will halt nitrification in a POTW for short periods, and most of the chromium will be retained in the sludge solids. Hexavalent chromium has been reported to severely affect the nitrification process, but trivalent chromium has little or no toxicity to activated sludge, except at high concentrations. The presence of iron, copper, and low pH will increase the toxicity of chromium in a POTW by releasing the chromium into solution to be ingested by microorganisms in the POTW.

The amount of chromium which passes through to the POTW effluent depends on the type of treatment processes used by the POTW. In a study of 240 POTW facilities, 56 percent of the primary plants allowed more than 80 percent pass-through to POTW effluent. More advanced treatment results in less pass-through. POTW effluent concentrations ranged from 0.003 to 3.2 mg/l total chromium (mean = 0.197, standard deviation = 0.48), and from 0.002 to 0.1 mg/l hexavalent chromium (mean = 0.017, standard deviation = 0.020).

Chromium not passed through the POTW will be retained in the sludge, where it is likely to build up in concentration. Sludge concentrations of total chromium of over 20,000 mg/kg (dry basis) have been observed. Disposal of sludges containing very high concentrations of trivalent chromium can potentially cause problems in uncontrolled landfills. Incineration, or similar destructive oxidation processes, can produce hexavalent chromium from lower valence states. Hexavalent chromium is potentially more toxic than trivalent chromium. In cases where high rates of chrome sludge application on land are used, distinct growth inhibition and plant tissue uptake have been noted.

Pretreatment of discharges substantially reduces the concentration of chromium in sludge. In Buffalo, New York, pretreatment of electroplating waste resulted in a decrease in chromium concentrations in POTW sludge from 2,510 to 1,040 mg/kg. A similar reduction occurred in Grand Rapids, Michigan, POTW facilities where the chromium concentration in sludge decreased from 11,000 to 2,700 mg/kg when pretreatment was made a requirement.

Copper (120). Copper is a metallic element that sometimes is found free, as the native metal, and is also found in minerals such as cuprite (Cu_2O), malechite [$CuCO_3.Cu(OH)_2$], azurite [$2CuCO_3.Cu(OH)_2$], chalcopyrite ($CuFeS_2$), and bornite (Cu_5FeS_4). Copper is obtained from these ores by smelting, leaching, and electrolysis. It is used in the plating, electrical, plumbing, and heating equipment industries, as well as in insecticides and fungicides.

Traces of copper are found in all forms of plant and animal life, and the metal is an essential trace element for nutrition. Copper is not considered to be a cumulative systemic poison for

humans as it is readily excreted by the body, but it can cause symptoms of gastroenteritis, with nausea and intestinal irritations, as relatively low dosages. The limiting factor in domestic water supplies is taste. To prevent this adverse organoleptic effect of copper in water, a criterion of 1 mg/l has been established.

The toxicity of copper to aquatic organisms varies significantly, not only with the species, but also with the physical and chemical characteristics of the water, including temperature, hardness, turbidity, and carbon dioxide content. In hard water, the toxicity of copper salts may be reduced by the precipitation of copper carbonate or other insoluble compounds. The sulfates of copper and zinc, and of copper and calcium are synergistic in their toxic effect on fish.

Relatively high concentrations of copper may be tolerated by adult fish for short periods of time; the critical effect of copper appears to be its higher toxicity to young or juvenile fish. Concentrations of 0.02 to 0.03 mg/l have proved fatal to some common fish species. In general the salmonoids are very sensitive and the sunfishes are less sensitive to copper.

The recommended criterion to protect freshwater aquatic life is 0.0056 mg/l as a 24-hour average, and 0.012 mg/l maximum concentration at a hardness of 50 mg/l $CaCO_3$. For total recoverable copper the criterion to protect freshwater aquatic life is 0.0056 mg/l as a 24-hour average.

Copper salts cause undesirable color reactions in the food industry and cause pitting when deposited on some other metals such as aluminum and galvanized steel. To control undesirable taste and odor quality of ambient water due to the organoleptic properties of copper, the estimated level is 1.0 mg/l for total recoverable copper.

Irrigation water containing more than minute quantities of copper can be detrimental to certain crops. Copper appears in all soils, and its concentration ranges from 10 to 80 ppm. In soils, copper occurs in association with hydrous oxides of manganese and iron, and also as soluble and insoluble complexes with organic matter. Copper is essential to the life of plants, and the normal range of concentration in plant tissue is from 5 to 20 ppm. Copper concentrations in plants normally do not build up to high levels when toxicity occurs. For example, the concentrations of copper in snapbean leaves and pods was less than 50 and 20 mg/kg, respectively, under conditions of severe copper toxicity. Even under conditions of copper toxicity, most of the excess copper accumulates in the roots; very little is moved to the aerial part of the plant.

Copper is not destroyed when treated by a POTW, and will either pass through to the POTW effluent or be retained in the POTW sludge. It can interfere with the POTW treatment processes and can limit the usefulness of municipal sludge.

The influent concentration of copper to a POTW has been observed by the EPA to range from 0.01 to 1.97 mg/l, with a median concentration of 0.12 mg/l. The copper that is removed from the influent stream of a POTW is absorbed on the sludge or appears in the sludge as the hydroxide of the metal. Bench scale pilot studies have shown that from about 25 percent to 75 percent of the copper passing through the activated sludge process remains in solution in the final effluent. Four-hour slug dosages of copper sulfate in concentrations exceeding 50 mg/l were reported to have severe effects on the removal efficiency of an unacclimated system, with the system returning to normal in about 100 hours. Slug dosages of copper in the form of copper cyanide were observed to have much more severe effects on the activated sludge system, but the total system returned to normal in 24 hours.

In a recent study of 268 POTW facilities, the median pass-through was over 80 percent for primary plants and 40 to 50 percent for trickling filter, activated sludge, and biological treatment plants. POTW effluent concentrations of copper ranged from 0.003 to 1.8 mg/l (mean 0.126, standard deviation 0.242).

Copper which does not pass through the POTW will be retained in the sludge where it will build up in concentration. The presence of excessive levels of copper in sludge may limit its use on cropland. Sewage sludge contains up to 16,000 mg/kg of copper, with 730 mg/kg as the mean value. These concentrations are significantly greater than those normally found in soil, which usually range from 18 to 80 mg/kg. Experimental data indicate that when dried sludge is spread over tillable land, the copper tends to remain in place down to the depth of the tillage, except for copper which is taken up by plants grown in the soil. Recent investigation has shown that the extractable copper content of sludge-treated soil decreased with time, which suggests a reversion of copper to less soluble forms was occurring.

Cyanide (121). Cyanides are among the most toxic of pollutants commonly observed in industrial wastewaters. Introduction of cyanide into industrial processes is usually by dissolution of potassium cyanide (KCN) or sodium cyanide (NaCN) in process waters. However, hydrogen cyanide (HCN) formed when the above salts are dissolved in water, is probably the most acutely lethal compound.

The relationship of pH to hydrogen cyanide formation is very important. As pH is lowered to below 7, more than 99 percent of the cyanide is present as HCN and less than 1 percent as cyanide

ions. Thus, at neutral pH, that of most living organisms, the more toxic form of cyanide prevails.

Cyanide ions combine with numerous heavy metal ions to form complexes. The complexes are in equilibrium with HCN. Thus, the stability of the metal-cyanide complex and the pH determine the concentration of HCN. Stability of the metal-cyanide anion complexes is extremely variable. Those formed with zinc, copper, and cadmium are not stable - they rapidly dissociate, with production of HCN, in near neutral or acid waters. Some of the complexes are extremely stable. Cobaltocyanide is very resistant to acid distillation in the laboratory. Iron cyanide complexes are also stable, but undergo photodecomposition to give HCN upon exposure to sunlight. Synergistic effects have been demonstrated for the metal cyanide complexes making zinc, copper, and cadmium cyanides more toxic than an equal concentration of sodium cyanide.

The toxic mechanism of cyanide is essentially an inhibition of oxygen metabolism, i.e., rendering the tissues incapable of exchanging oxygen. The cyanogen compounds are true noncumulative protoplasmic poisons. They arrest the activity of all forms of animal life. Cyanide shows a very specific type of toxic action. It inhibits the cytochrome oxidase system. This system is the one which facilitates electron transfer from reduced metabolites to molecular oxygen. The human body can convert cyanide to a non-toxic thiocyanate and eliminate it. However, if the quantity of cyanide ingested is too great at one time, the inhibition of oxygen utilization proves fatal before the detoxifying reaction reduces the cyanide concentration to a safe level.

Cyanides are more toxic to fish than to lower forms of aquatic organisms such as midge larvae, crustaceans, and mussels. Toxicity to fish is a function of chemical form and concentration, and is influenced by the rate of metabolism (temperature), the level of dissolved oxygen, and pH. In laboratory studies free cyanide concentrations ranging from 0.05 to 0.14 mg/l have been proven to be fatal to sensitive fish species including trout, bluegill, and fathead minnows. Levels above 0.2 mg/l are rapidly fatal to most fish species. Long term sublethal concentrations of cyanide as low as 0.01 mg/l have been shown to affect the ability of fish to function normally, e.g., reproduce, grow, and swim.

For the protection of human health from the toxic properties of cyanide ingested through water and through contaminated aquatic organisms, the ambient water quality criterion is determined to be 0.200 mg/l.

Persistence of cyanide in water is highly variable and depends upon the chemical form of cyanide in the water, the concentration of cyanide, and the nature of other constituents. Cyanide may be

destroyed by strong oxidizing agents such as permanganate and chlorine. Chlorine is commonly used to oxidize strong cyanide solutions. Carbon dioxide and nitrogen are the products of complete oxidation. But if the reaction is not complete, the very toxic compound, cyanogen chloride, may remain in the treatment system and subsequently be released to the environment. Partial chlorination may occur as part of a POTW treatment, or during the disinfection treatment of surface water for drinking water preparation.

Cyanides can interfere with treatment processes in a POTW, or pass through to ambient waters. At low concentrations and with acclimated microflora, cyanide may be decomposed by microorganisms in anaerobic and aerobic environments or waste treatment systems. However, data indicate that much of the cyanide introduced passes through to the POTW effluent. The mean pass-through of 14 biological plants was 71 percent. In a recent study of 41 POTW facilities the effluent concentrations ranged from 0.002 to 100 mg/l (mean = 2.518, standard deviation = 15.6). Cyanide also enhances the toxicity of metals commonly found in POTW effluents, including the toxic pollutants cadmium, zinc, and copper.

Data for Grand Rapids, Michigan, showed a significant decline in cyanide concentrations downstream from the POTW after pretreatment regulations were put in force. Concentrations fell from 0.66 mg/l before, to 0.01 mg/l after pretreatment was required.

Lead (122). Lead is a soft, malleable, ductile, blueish-gray, metallic element, usually obtained from the mineral galena (lead sulfide, PbS), anglesite (lead sulfate, $PbSO_4$), or cerussite (lead carbonate, $PbCO_3$). Because it is usually associated with minerals of zinc, silver, copper, gold, cadmium, antimony, and arsenic, special purification methods are frequently used before and after extraction of the metal from the ore concentrate by smelting.

Lead is widely used for its corrosion resistance, sound and vibration absorption, low melting point (solders), and relatively high imperviousness to various forms of radiation. Small amounts of copper, antimony and other metals can be alloyed with lead to achieve greater hardness, stiffness, or corrosion resistance than is afforded by the pure metal. Lead compounds are used in glazes and paints. About one third of U.S. lead consumption goes into storage batteries. About half of U.S. lead consumption is from secondary lead recovery. U.S. consumption of lead is in the range of one million tons annually.

Lead ingested by humans produces a variety of toxic effects including impaired reproductive ability, disturbances in blood chemistry, neurological disorders, kidney damage, and adverse cardiovascular effects. Exposure to lead in the diet results in

permanent increase in lead levels in the body. Most of the lead entering the body eventually becomes localized in the bones where it accumulates. Lead is a carcinogen or cocarcinogen in some species of experimental animals. Lead is teratogenic in experimental animals. Mutagenicity data are not available for lead.

The ambient water quality criterion for lead is recommended to be identical to the existng drinking water standard which is 0.050 mg/l. Available data show that adverse effects on aquatic life occur at concentrations as low as 7.5×10^{-4} mg/l of total recoverable lead as a 24-hour average with a water hardness of 50 mg/l as $CaCO_3$.

Lead is not destroyed in a POTW, but is passed through to the effluent or retained in the POTW sludge; it can interfere with POTW treatment processes and can limit the usefulness of POTW sludge for application to agricultural croplands. Threshold concentration for inhibition of the activated sludge process is 0.1 mg/l, and for the nitrification process is 0.5 mg/l. In a study of 214 POTW facilities, median pass through values were over 80 percent for primary plants and over 60 percent for trickling filter, activated sludge, and biological process plants. Lead concentration in POTW effluents ranged from 0.003 to 1.8 mg/l (mean = 0.106 mg/l, standard deviation = 0.222).

Application of lead-containing sludge to cropland should not lead to uptake by crops under most conditions because normally lead is strongly bound by soil. However, under the unusual condition of low pH (less than 5.5) and low concentrations of labile phosphorus, lead solubility is increased and plants can accumulate lead.

Mercury (123). Mercury is an elemental metal rarely found in nature as the free metal. Mercury is unique among metals as it remains a liquid down to about 39 degrees below zero. It is relatively inert chemically and is insoluble in water. The principal ore is cinnabar (HgS).

Mercury is used industrially as the metal and as mercurous and mercuric salts and compounds. Mercury is used in several types of batteries. Mercury released to the aqueous environment is subject to biomethylation - conversion to the extremely toxic methyl mercury.

Mercury can be introduced into the body through the skin and the respiratory system as the elemental vapor. Mercuric salts are highly toxic to humans and can be absorbed through the gastrointestinal tract. Fatal doses can vary from 1 to 30 grams. Chronic toxicity of methyl mercury is evidenced primarily by neurological symptoms. Some mercuric salts cause death by kidney failure.

Mercuric salts are extremely toxic to fish and other aquatic life. Mercuric chloride is more lethal than copper, hexavalent chromium, zinc, nickel, and lead towards fish and aquatic life. In the food cycle, algae containing mercury up to 100 times the concentration in the surrounding sea water are eaten by fish which further concentrate the mercury. Predators that eat the fish in turn concentrate the mercury even further.

For the protection of human health from the toxic properties of mercury ingested through water and through contaminated aquatic organisms the ambient water criterion is determined to be 0.0002 mg/l.

Mercury is not destroyed when treated by a POTW, and will either pass through to the POTW effluent or be incorporated into the POTW sludge. At low concentrations it may reduce POTW removal efficiencies, and at high concentrations it may upset the POTW operation.

The influent concentrations of mercury to a POTW have been observed by the EPA to range from 0.002 to 0.24 mg/l, with a median concentration of 0.001 mg/l. Mercury has been reported in the literature to have inhibiting effects upon an activated sludge POTW at levels as low as 0.1 mg/l. At 5 mg/l of mercury, losses of COD removal efficiency of 14 to 40 percent have been reported, while at 10 mg/l loss of removal of 59 percent has been reported. Upset of an activated sludge POTW is reported in the literature to occur near 200 mg/l. The anaerobic digestion process is much less affected by the presence of mercury, with inhibitory effects being reported at 1,365 mg/l.

In a study of 22 POTW facilities having secondary treatment, the range of removal of mercury from the influent to the POTW ranged from 4 to 99 percent with median removal of 41 percent. Thus significant pass through of mercury may occur.

In sludges, mercury content may be high if industrial sources of mercury contamination are present. Little is known about the form in which mercury occurs in sludge. Mercury may undergo biological methylation in sediments, but no methylation has been observed in soils, mud, or sewage sludge.

The mercury content of soils not receiving additions of POTW sewage sludge lie in the range from 0.01 to 0.5 mg/kg. In soils receiving POTW sludges for protracted periods, the concentration of mercury has been observed to approach 1.0 mg/kg. In the soil, mercury enters into reactions with the exchange complex of clay and organic fractions, forming both ionic and covalent bonds. Chemical and microbiological degradation of mercurials can take place side by side in the soil, and the products - ionic or molecular - are retained by organic matter and clay or may be

volatilized if gaseous. Because of the high affinity between mercury and the solid soil surfaces, mercury persists in the upper layer of the soil.

Mercury can enter plants through the roots, it can readily move to other parts of the plant, and it has been reported to cause injury to plants. In many plants mercury concentrations range from 0.01 to 0.20 mg/kg, but when plants are supplied with high levels of mercury, these concentrations can exceed 0.5 mg/kg. Bioconcentration occurs in animals ingesting mercury in food.

Nickel (124). Nickel is seldom found in nature as the pure elemental metal. It is a relatively plentiful element and is widely distributed throughout the earth's crust. It occurs in marine organisms and is found in the oceans. The chief commercial ores for nickel are pentlandite [$(Fe,Ni)_9S_8$], and a lateritic ore consisting of hydrated nickel-iron-magnesium silicate.

Nickel has many and varied uses. It is used in alloys and as the pure metal. Nickel salts are used for electroplating baths.

The toxicity of nickel to man is thought to be very low, and systemic poisoning of human beings by nickel or nickel salts is almost unknown. In non-human mammals nickel acts to inhibit insulin release, depress growth, and reduce cholesterol. A high incidence of cancer of the lung and nose has been reported in humans engaged in the refining of nickel.

Nickel salts can kill fish at very low concentrations. However, nickel has been found to be less toxic to some fish than copper, zinc, and iron. Nickel is present in coastal and open ocean water at concentrations in the range of 0.0001 to 0.006 mg/l although the most common values are 0.002 to 0.003 mg/l. Marine animals contain up to 0.4 mg/l and marine plants contain up to 3 mg/l. Higher nickel concentrations have been reported to cause reduction in photosynthetic activity of the giant kelp. A low concentration was found to kill oyster eggs.

For the protection of human health based on the toxic properties of nickel ingested through water and through contaminated aquatic organisms, the ambient water criterion is determined to be 0.0134 mg/l. If contaminated aquatic organisms are consumed, excluding consumption of water, the ambient water criterion is determined to be 0.100 mg/l. Available data show that adverse effects on aquatic life occur for total recoverable nickel concentrations as low as 0.0071 mg/l as a 24-hour average.

Nickel is not destroyed when treated in a POTW, but will either pass through to the POTW effluent or be retained in the POTW sludge. It can interfere with POTW treatment processes and can also limit the usefulness of municipal sludge.

Nickel salts have caused inhibition of the biochemical oxidation of sewage in a POTW. In a pilot plant, slug doses of nickel significantly reduced normal treatment efficiencies for a few hours, but the plant acclimated itself somewhat to the slug dosage and appeared to achieve normal treatment efficiencies within 40 hours. It has been reported that the anaerobic digestion process is inhibited only by high concentrations of nickel, while a low concentration of nickel inhibits the nitrification process.

The influent concentration of nickel to a POTW has been observed by the EPA to range from 0.01 to 3.19 mg/l, with a median of 0.33 mg/l. In a study of 190 POTW facilities, nickel pass-through was greater than 90 percent for 82 percent of the primary plants. Median pass-through for trickling filter, activated sludge, and biological process plants was greater than 80 percent. POTW effluent concentrations ranged from 0.002 to 40 mg/l (mean = 0.410, standard deviation = 3.279).

Nickel not passed through the POTW will be incorporated into the sludge. In a recent two-year study of eight cities, four of the cities had median nickel concentrations of over 350 mg/kg, and two were over 1,000 mg/kg. The maximum nickel concentration observed was 4,010 mg/kg.

Nickel is found in nearly all soils, plants, and waters. Nickel has no known essential function in plants. In soils, nickel typically is found in the range from 10 to 100 mg/kg. Various environemntal exposures to nickel appear to correlate with increased incidence of tumors in man. For example, cancer in the maxillary antrum of snuff users may result from using plant materials grown on soil high in nickel.

Nickel toxicity may develop in plants from application of sewage sludge on acid soils. Nickel has caused reduction of yields for a variety of crops including oats, mustard, turnips, and cabbage. In one study nickel decreased the yields of oats significantly at 100 mg/kg.

Whether nickel exerts a toxic effect on plants depends on several soil factors, the amount of nickel applied, and the contents of other metals in the sludge. Unlike copper and zinc, which are more available from inorganic sources than from sludge, nickel uptake by plants seems to be promoted by the presence of the organic matter in sludge. Soil treatments, such as liming, reduce the solubility of nickel. Toxicity of nickel to plants is enhanced in acidic soils.

Selenium (125). Selenium (chemical symbol Se) is a non-metallic element existing in several allotropic forms. Gray selenium, which has a metallic appearance, is the stable form at ordinary temperatures and melts at 220°C. Selenium is a major component

of 38 minerals and a minor component of 37 others found in various parts of the world. Most selenium is obtained as a by-product of precious metals recovery from electrolytic copper refinery slimes. U.S. annual production at one time reached one million pounds.

Principal uses of selenium are in semi-conductors, pigments, decoloring of glass, zerography, and metallurgy. It also is used to produce ruby glass used in signal lights. Several selenium compounds are important oxidizing agents in the synthesis of organic chemicals and drug products.

While results of some studies suggest that selenium may be an essential element in human nutrition, the toxic effects of selenium in humans are well established. Lassitude, loss of hair, discoloration and loss of fingernails are symptoms of selenium poisoning. In a fatal case of ingestion of a larger dose of selenium acid, peripheral vascular collapse, pulmonary edema, and coma occurred. Selenium produces mutagenic and teratogenic effects, but it has not been established as exhibiting carcinogenic activity.

For the protection of human health from the toxic properties of selenium ingested through water and through contaminated aquatic organisms, the ambient water criterion is determined to be 0.010 mg/l, i.e., the same as the drinking water standard. Available data show that adverse effects on aquatic life occur at concentrations higher than that cited for human toxicity.

Very few data are available regarding the behavior of selenium in a POTW. One EPA survey of 103 POTW facilities revealed one POTW using biological treatment and having selenium in the influent. Influent concentration was 0.0025 mg/l, effluent concentration was 0.0016 mg/l, giving a removal of 37 percent. It is not known to be inhibitory to POTW processes. In another study, sludge from POTW facilities in 16 cities was found to contain from 1.8 to 8.7 mg/kg selenium, compared to 0.01 to 2 mg/kg in untreated soil. These concentrations of selenium in sludge present a potential hazard for humans or other mammals eating crops grown on soil treated with selenium-containing sludge.

Silver (126). Silver is a soft, lustrous, white metal that is insoluble in water and alkali. In nature, silver is found in the elemental state (native silver) and combined in ores such as argentite (Ag_2S), horn silver ($AgCl$), proustite (Ag_3AsS_3), and pyrargyrite (Ag_3SbS_3). Silver is used extensively in several industries, among them electroplating.

Metallic silver is not considered to be toxic, but most of its salts are toxic to a large number of organisms. Upon ingestion

by humans, many silver salts are absorbed in the circulatory system and deposited in various body tissues, resulting in generalized or sometimes localized gray pigmentation of the skin and mucous membranes known as argyria. There is no known method for removing silver from the tissues once it is deposited, and the effect is cumulative.

Silver is recognized as a bactericide and doses from 0.000001 to 0.0005 mg/l have been reported as sufficient to sterilize water. The criterion for ambient water to protect human health from the toxic properties of silver ingested through water and through contaminated aquatic organisms is 0.010 mg/l.

The chronic toxic effects of silver on the aquatic environment have not been given as much attention as many other heavy metals. Data from existing literature support the fact that silver is very toxic to aquatic organisms. Despite the fact that silver is nearly the most toxic of the heavy metals, there are insufficient data to adequately evaluate even the effects of hardness on silver toxicity. There are no data available on the toxicity of different forms of silver.

There is no available literature on the incidental removal of silver by a POTW. An incidental removal of about 50 percent is assumed as being representative. This is the highest average incidental removal of any metal for which data are available. (Copper has been indicated to have a median incidental removal rate of 49 percent.)

Bioaccumulation and concentration of silver from sewage sludge has not been studied to any great degree. There is some indication that silver could be bioaccumulated in mushrooms to the extent that there could be adverse physiological effects on humans if they consumed large quantities of mushrooms grown in silver enriched soil. The effect, however, would tend to be unpleasant rather than fatal.

There is little summary data available on the quantity of silver discharged to a POTW. Presumably there would be a tendency to limit its discharge from a manufacturing facility because of its high intrinsic value.

Thallium (127). Thallium (Tl) is a soft, silver-white, dense, malleable metal. Five major minerals contain 15 to 85 percent thallium, but they are not of commercial importance because the metal is produced in sufficient quantity as a by-product of lead-zinc smelting of sulfide ores. Thallium melts at 304°C. U.S. annual production of thallium and its compounds is estimated to be 1,500 pounds.

Industrial uses of thallium include the manufacture of alloys, electronic devices and special glass. Thallium catalysts are used for industrial organic syntheses.

Acute thallium poisoning in humans has been widely described. Gastrointestinal pains and diarrhea are followed by abnormal sensation in the legs and arms, dizziness, and, later, loss of hair. The central nervous system is also affected. Somnolence, delerium or coma may occur. Studies on the teratogenicity of thallium appear inconclusive; no studies on mutagenicity were found; and no published reports on carcinogenicity of thallium were found.

For the protection of human health from the toxic properties of thallium ingested through water and contaminated aquatic organisms, the ambient water criterion is 0.004 mg/l.

No reports were found regarding the behavior of thallium in a POTW. It will not be degraded, therefore it must pass through to the effluent or be removed with the sludge. However, since the sulfide (TlS) is very insoluble, if appreciable sulfide is present dissolved thallium in the influent to a POTW may be precipitated into the sludge. Subsequent use of sludge bearing thallium compounds as a soil amendment to crop bearing soils may result in uptake of this element by food plants. Several leafy garden crops (cabbage, lettuce, leek, and endive) exhibit relatively higher concentrations of thallium than other foods such as meat.

Zinc (128). Zinc occurs abundantly in the earth's crust, concentrated in ores. It is readily refined into the pure, stable, silver-white metal. In addition to its use in alloys, zinc is used as a protective coating on steel. It is applied by hot diping (i.e., dipping the steel in molten zinc) or by electroplating.

Zinc can have an adverse effect on man and animals at high concentrations. Zinc at concentrations in excess of 5 mg/l causes an undesirable taste which persists through conventional treatment. For the prevention of adverse effects due to these organoleptic properties of zinc, 5 mg/l was adopted for the ambient water criterion. Available data show that adverse effects on aquatic life occur at concentrations as low as 0.047 mg/l as a 24-hour average.

Toxic concentrations of zinc compounds cause adverse changes in the morphology and physiology of fish. Lethal concentrations in the range of 0.1 mg/l have been reported. Acutely toxic concentrations induce cellular breakdown of the gills, and possibly the clogging of the gills with mucous. Chronically toxic concentrations of zinc compounds cause general enfeeblement and widespread histological changes to many organs, but not to gills. Abnormal swimming behavior has been reported at 0.04 mg/l. Growth and maturation are retarded by zinc. It has been observed that the effects of zinc poisoning may not become apparent immediately, so that fish removed from zinc-contaminated water may die as long as 48 hours after removal.

In general, salmonoids are most sensitive to elemental zinc in soft water; the rainbow trout is the most sensitive in hard waters. A complex relationship exists between zinc concentration, dissolved zinc concentration, pH, temperature, and calcium and magnesium concentration. Prediction of harmful effects has been less than reliable and controlled studies have not been extensively documented.

The major concern with zinc compounds in marine waters is not with acute lethal effects, but rather with the long-term sublethal effects of the metallic compounds and complexes. Zinc accumulates in some marine species, and marine animals contain zinc in the range of 6 to 1,500 mg/kg. From the point of view of acute lethal effects, invertebrate marine animals seem to be the most sensitive organism tested.

Toxicities of zinc in nutrient solutions have been demonstrated for a number of plants. A variety of fresh water plants tested manifested harmful symptoms at concentrations of 0.030 to 21.6 mg/l. Zinc sulfate has also been found to be lethal to many plants and it could impair agricultural uses of the water.

Zinc is not destroyed when treated by a POTW, but will either pass through to the POTW effluent or be retained in the POTW sludge. It can interfere with treatment processes in the POTW and can also limit the usefulness of municipal sludge.

In slug doses, and particularly in the presence of copper, dissolved zinc can interfere with or seriously disrupt the operation of POTW biological processes by reducing overall removal efficiencies, largely as a result of the toxicity of the metal to biological organisms. However, zinc solids in the form of hydroxides or sulfides do not appear to interfere with biological treatment processes, on the basis of available data. Such solids accumulate in the sludge.

The influent concentrations of zinc to a POTW has been observed by the EPA to range from 0.017 to 3.91 mg/l, with a median concentration of 0.33 mg/l. Primary treatment is not efficient in removing zinc; however, the microbial floc of secondary treatment readily adsorbs zinc.

In a study of 258 POTW facilities, the median pass-through values were 70 to 88 percent for primary plants, 50 to 60 percent for trickling filter and biological process plants, and 30 to 40 percent for activated process plants. POTW effluent concentrations of zinc ranged from 0.003 to 3.6 mg/l (mean = 0.330, standard deviation = 0.464).

The zinc which does not pass through the POTW is retained in the sludge. The presence of zinc in sludge may limit its use on

cropland. Sewage sludge contains 72 to over 30,000 mg/kg of zinc, with 3,366 mg/kg as the mean value. These concentrations are significantly greater than those normally found in soil, which range from 0 to 195 mg/kg, with 94 mg/kg being a common level. Therefore, application of sewage sludge to soil will generally increase the concentration of zinc in the soil. Zinc can be toxic to plants, depending upon soil pH. Lettuce, tomatoes, turnips, mustard, kale, and beets are especially sensitive to zinc contamination.

Aluminum. Aluminum, a nonconventional pollutant, is an abundant silvery white metal comprising 8.1 percent of the earth's crust, but never found in a free state. The principal ore for aluminum is bauxite from which alumina (Al_2O_3) is extracted. Aluminum metal is produced by electrolysis of the alumina in the cryolite bath.

Aluminum metal is relatively corrosion resistant because it forms a protective oxide film on the surface which prevents corrosion under many conditions. Electrolytic action of other metals in contact with aluminum and strong acids and alkalis can break down the oxide layer causing rapid corrosion to occur.

Aluminum is light, malleable, ductile, possesses high thermal and electrical conductivity, and is non-magnetic. It can be formed, machined or cast. Aluminum is used in the construction, transportation, and container industries and competes with iron and steel in these markets.

There are no reported adverse physiological effects on man from low concentrations of aluminum in drinking water, however, large concentrations of aluminum in the human body are alledged to cause changes in behavior. Salts of aluminum are used as coagulants in water treatment, and in limited quantities do not have any adverse effects on POTW operations. Some aluminum salts are soluble, however, mildly alkaline conditions cause precipitation of aluminum as hydroxide. The precipitation of aluminum hydroxide can have an adverse effect on rooted aquatics and invertebrate benthos.

Oil and Grease. Oil and grease are taken together as one pollutant parameter. This is a conventional pollutant and some of its components are:

1. Light Hydrocarbons - These include light fuels such as gasoline, kerosene, and jet fuel, and miscellaneous solvents used for industrial processing, degreasing, or cleaning purposes. The presence of these light hydrocarbons may make the removal of other heavier oil wastes more difficult.

2. Heavy Hydrocarbons, Fuels, and Tars - These include the crude oils, diesel oils, #6 fuel oil, residual oils, slop oils, and in some cases, asphalt and road tar.

3. Lubricants and Cutting Fluids - These generally fall into two classes: non-emulsifiable oils such as lubricating oils and greases and emulsifiable oils such as water soluble oils, rolling oils, cutting oils, and drawing compounds. Emulsifiable oils may contain fat, soap, or various other additives.

4. Vegetable and Animal Fats and Oils - These originate primarily from processing of foods and natural products.

These compounds can settle or float and may exist as solids or liquids depending upon factors such as method of use, production process, and temperature of water.

Oil and grease even in small quantities cause troublesome taste and odor problems. Scum lines from these agents are produced on water treatment basin walls and other containers. Fish and water fowl are adversely affected by oils in their habitat. Oil emulsions may adhere to the gills of fish causing suffocation, and the flesh of fish is tainted when microorganisms that were exposed to waste oil are eaten. Deposition of oil in the bottom sediments of water can serve to inhibit normal benthic growth. Oil and grease exhibit an oxygen demand.

Many of the toxic organic pollutants will be found distributed between the oil phase and the aqueous phase in industrial wastewaters. The presence of phenols, PCB's, PAH's, and almost any other organic pollutant in the oil and grease make characterization of this parameter almost impossible. However, all of these other organics add to the objectionable nature of the oil and grease.

Levels of oil and grease which are toxic to aquatic organisms vary greatly, depending on the type and the species susceptibility. However, it has been reported that crude oil in concentrations as low as 0.3 mg/l is extremely toxic to freshwater fish. It has been recommended that public water supply sources be essentially free from oil and grease.

Oil and grease in quantities of 100 l/sq km show up as a sheen on the surface of a body of water. The presence of oil slicks decreases the aesthetic value of a waterway.

Oil and grease is compatible with a POTW activated sludge process in limited quantity. However, slug loadings or high concentrations of oil and grease interfere with biological treatment processes. The oils coat surfaces and solid particles, preventing access of oxygen, and sealing in some microorganisms. Land spreading of POTW sludge containing oil and grease uncontaminated by toxic pollutants is not expected to affect crops grown on the treated land, or animals eating those crops.

pH. Although not a specific pollutant, pH is related to the acidity or alkalinity of a wastewater stream. It is not, however, a measure of either. The term pH is used to describe the hydrogen ion concentration (or activity) present in a given solution. Values for pH range from 0 to 14, and these numbers are the negative logarithms of the hydrogen ion concentrations. A pH of 7 indicates neutrality. Solutions with a pH above 7 are alkaline, while those solutions with a pH below 7 are acidic. The relationship of pH and acidity and alkalinity is not necessarily linear or direct. Knowledge of the water pH is useful in determining necessary measures for corrosion control, sanitation, and disinfection. Its value is also necessary in the treatment of industrial wastewaters to determine amounts of chemicals required to remove pollutants and to measure their effectiveness. Removal of pollutants, especially dissolved solids is affected by the pH of the wastewater.

Waters with a pH below 6.0 are corrosive to water works structures, distribution lines, and household plumbing fixtures and can thus add constituents to drinking water such as iron, copper, zinc, cadmium, and lead. The hydrogen ion concentration can affect the taste of the water, and at a low pH water tastes sour. The bactericidal effect of chlorine is weakened as the pH increases, and it is advantageous to keep the pH close to 7.0. This is significant for providing safe drinking water.

Extremes of pH or rapid pH changes can exert stress conditions or kill aquatic life outright. Even moderate changes from acceptable criteria limits of pH are deleterious to some species.

The relative toxicity to aquatic life of many materials is increased by changes in the water pH. For example, metallocyanide complexes can increase a thousand-fold in toxicity with a drop of 1.5 pH units.

Because of the universal nature of pH and its effect on water quality and treatment, it is selected as a pollutant parameter for many industry categories. A neutral pH range (approximately 6 to 9) is generally desired because either extreme beyond this range has a deleterious effect on receiving waters or the pollutant nature of other wastewater constituents.

Pretreatment for regulation of pH is covered by the "General Pretreatment Regulations for Existing and New Sources of Pollution," 40 CFR 403.5. This section prohibits the discharge to a POTW of "pollutants which will cause corrosive structural damage to the POTW but in no case discharges with pH lower than 5.0 unless the works is specially designed to accommodate such discharges."

Total Suspended Solids (TSS). Suspended solids include both organic and inorganic materials. The inorganic compounds include sand, silt, and clay. The organic fraction includes such materials as grease, oil, tar, and animal and vegetable waste products.

These solids may settle out rapidly, and bottom deposits are often a mixture of both organic and inorganic solids. Solids may be suspended in water for a time and then settle to the bed of the stream or lake. These solids discharged with man's wastes may be inert, slowly biodegradable materials, or rapidly decomposable substances. While in suspension, suspended solids increase the turbidity of the water, reduce light penetration, and impair the photosynthetic activity of aquatic plants.

Suspended solids in water interfere with many industrial processes and cause foaming in boilers and incrustations on equipment exposed to such water, especially as the temperature rises. They are undesirable in process water used in the manufacture of steel, in the textile industry, in laundries, in dyeing, and in cooling systems.

Solids in suspension are aesthetically displeasing. When they settle to form sludge deposits on the stream or lake bed, they are often damaging to the life in the water. Solids, when transformed to sludge deposit, may do a variety of damaging things, including blanketing the stream or lake bed and thereby destroying the living spaces for those benthic organisms that would otherwise occupy the habitat. When of an organic nature, solids use a portion or all of the dissolved oxygen available in the area. Organic materials also serve as a food source for sludgeworms and associated organisms.

Disregarding any toxic effect attributable to substances leached out by water, suspended solids may kill fish and shellfish by causing abrasive injuries and by clogging the gills and respiratory passages of various aquatic fauna. Indirectly, suspended solids are inimical to aquatic life because they screen out light, and they promote and maintain the development of noxious conditions through oxygen depletion. This results in the killing of fish and fish food organisms. Suspended solids also reduce the recreational value of the water.

Total suspended solids is a traditional pollutant which is compatible with a well-run POTW. This pollutant with the exception of those components which are described elsewhere in this section, e.g., heavy metal components, does not interfere with the operation of a POTW. However, since a considerable portion of the innocuous TSS may be inseparably bound to the constituents which do interfere with POTW operation, or produce unusable sludge, or subsequently dissolve to produce unacceptable POTW effluent, TSS may be considered a toxic waste.

POLLUTANT SELECTION FOR CORE WASTE STREAMS

The pollutant selection procedure was performed for the following core groups of waste streams to select those toxic pollutants that would be considered for establishing regulations for these core wastewater stream groups:

Rolling with Neat Oils Core Waste Streams
Rolling with Emulsions Core Waste Streams
Extrusion Core Waste Streams
Forging Core Waste Streams
Drawing with Neat Oils Core Waste Streams
Drawing with Emulsions or Soaps Core Waste Streams

Rolling with Neat Oils Core Waste Streams

The following waste streams will receive a pollutant discharge allocation in the core of the Rolling with Neat Oils Subcategory:

Roll Grinding Spent Emulsion
Annealing Furnace Atmosphere Scrubber Liquor
Sawing Spent Lubricant
Miscellaneous Nondescript Wastewater Sources

The annealing furnace atmosphere scrubber liquor waste stream had no toxic pollutants detected above the level considered achievable by specific available treatment methods. No specific pollutant data were considered for the miscellaneous nondescript wastewater sources. The Agency did not sample the roll grinding spent emulsion and sawing spent lubricant. However, the characteristics of these wastes are determined to be the same as the rolling spent emulsion. All three processes, rolling, roll grinding and sawing, require a lubricant to prevent excess wear on the metal against metal surfaces and to aid by cooling the surfaces. Since the properties of the lubricants required are similar between these three processes, the formulations for each ought to be similar, therefore, the characteristics of one are transferable to another.

Pollutants Never Detected. The toxic pollutants listed below were not detected in any samples from these wastewater streams; therefore, they were not selected for consideration in establishing regulations for these wastewater streams.

3. acrylonitrile
5. benzidine
6. carbon tetrachloride
8. 1,2,4-trichlorobenzene
9. hexachlorobenzene
10. 1,2-dichloroethane

12. hexachloroethane
13. 1,1-dichloroethane
14. 1,1,2-trichloroethane
16. chloroethane
17. DELETED
18. bis(2-chloroethyl) ether
19. 2-chloroethyl vinyl ether
20. 2-chloronaphthalene
22. p-chloro-m-cresol
24. 2-chlorophenol
25. 1,2-dichlorobenzene
26. 1,3-dichlorobenzene
27. 1,4-dichlorobenzene
28. 3,3'-dichlorobenzidine
29. 1,1-dichloroethylene
31. 2,4-dichlorophenol
32. 1,2-dichloropropane
33. 1,3-dichloropropylene
34. 2,4-dimethylphenol
35. 2,4-dinitrotoluene
36. 2,6-dinitrotoluene
37. 1,2-diphenylhydrazine
40. 4-chlorophenyl phenyl ether
41. 4-bromophenyl phenyl ether
42. bis(2-chloroisopropyl) ether
43. bis(2-chloroethoxy) methane
45. methyl chloride
46. methyl bromide
47. bromoform
48. dichlorobromomethane
49. DELETED
50. DELETED
51. chlorodibromomethane
52. hexachlorobutadiene
53. hexachlorocyclopentadiene
54. isophorone
56. nitrobenzene
57. 2-nitrophenol
58. 4-nitrophenol
59. 2,4-dinitrophenol
60. 4,6-dinitro-o-cresol
61. N-nitrosodimethylamine
63. N-nitrosodi-n-propylamine
69. di-n-octyl phthalate
73. benzo(a)pyrene
74. benzo(b)fluoranthene
75. benzo(k)fluoranthene
79. benzo(ghi)perylene
82. dibenzo(a,h)anthracene
83. indeno(1,2,3-c,d)pyrene

88. vinyl chloride
89. aldrin
90. dieldrin
94. 4,4'-DDD
100. heptachlor
101. heptachlor epoxide
104. gamma-BHC
105. delta-BHC
113. toxaphene
116. asbestos
129. 2,3,7,8-tetrachlorodibenzo-p-dioxin

Pollutants Never Found Above Their Analytical Quantification Level. The toxic pollutants listed below were never found above their analytical quantification level in any samples from these wastewater streams; therefore, they were not selected for consideration in establishing regulations for these wastewater streams.

11. 1,1,1-trichloroethane
15. 1,1,2,2-tetrachloroethane
64. pentachlorophenol
72. benzo(a)anthracene
92. 4,4-DDT
114. antimony
117. beryllium
125. selenium
126. silver
127. thallium

Pollutants Detected Below Levels Achievable by Treatment. The toxic pollutants below were found above their analytical quantification level only at a concentration below the concentration considered achievable by specific available treatment methods; therefore, they were not selected for consideration in establishing regulations for these wastewater streams. The pollutants are individually discussed following the list.

2. acrolein
4. benzene
7. chlorobenzene
21. 2,4,6-trichlorophenol
23. chloroform
44. methylene chloride
115. arsenic
118. cadmium
123. mercury

Acrolein was detected above its analytical quantification level in 2 of 8 samples; however, it was not found above the level considered achievable by specific treatment methods (0.100 mg/l).

Benzene was detected above its analytical quantification level in 1 of 6 samples; however, it was not found above the level considered achievable by specific treatment methods (0.05 mg/l).

Chlorobenzene was detected above its analytical quantification level in 1 of 8 samples; however, it was not found above the level considered achievable by specific treatment methods (0.025 mg/l).

2,4,6-Trichlorophenol was detected above its analytical quantification level in 1 of 9 samples; however, it was not found above the level considered achievable by specific treatment methods (0.025 mg/l).

Chloroform was detected above its analytical quantification level in 2 of 8 samples; however, it was not found above the level considered achievable by specific treatment methods (0.1 mg/l).

Methylene chloride was found above its analytical quantification level in 5 of 8 samples, with values ranging from 0.360 to 1.300 mg/l. This pollutant is not attributable to specific materials or processes associated with rolling with neat oils; however, it is a common solvent used in analytical laboratories, and is not expected to be present in raw wastewaters at concentrations above the level considered achievable by specific available treatment methods (0.100 mg/l).

Arsenic was detected above its analytical quantification level in 4 of 9 samples; however, it was not found above the level considered achievable by specific treatment methods (0.34 mg/l).

Cadmium was detected above its analytical quantification level in 5 of 9 samples; however, it was only found above the level considered achievable by specific treatment methods (0.049 mg/l) in 2 of 9 samples and in 2 of 5 sources. Both of these sources were at a single plant.

Mercury was detected above its analytical quantification level in 3 of 9 samples; however, it was not found above the level considered achievable by specific treatment methods (0.036 mg/l).

Pollutants Detected in a Small Number of Sources. The toxic pollutants listed below were found above their analytical quantification level at only a small number of sources within the category and are uniquely related to only those sources; therefore, they were not selected for consideration in establishing

regulations for these wastewater streams. The pollutants are individually discussed following the list.

30. 1,2-trans-dichloroethylene
67. butyl benzyl phthalate
71. dimethyl phthalate
76. chrysene
77. acenaphthylene
78. anthracene (a)
81. phenanthrene (a)
85. tetrachloroethylene
87. trichloroethylene
91. chlordane
93. 4,4'-DDE
95. alpha-endosulfan
96. beta-endosulfan
102. alpha-BHC
103. beta-BHC
124. nickel

(a) Reported together

1,2-trans-Dichloroethylene was detected above its analytical quantification level in 1 of 8 samples and in 1 of 4 sources.

Butyl benzyl phthalate was detected above its analytical quantification level in 1 of 9 samples and in 1 of 6 sources.

Dimethyl phthalate was detected above its analytical quantification level in 1 of 9 samples and in 1 of 6 sources.

Chrysene was detected above its analytical quantification level in 1 of 9 samples and in 1 of 6 sources.

Acenaphthylene was detected above its analytical quantification level in 1 of 9 samples and in 1 of 6 sources.

Anthracene and phenanthrene are not cleanly separated by the analytical protocol employed in this study; thus, they are reported together. The sum of these pollutants was reported at values greater than their analytical quantification level in 2 of 9 samples and in 1 of 6 sources.

Tetrachloroethylene was detected above its analytical quantification level in 5 of 8 samples; however, it was only found above the level considered achievable by specific treatment methods (0.05 mg/l) in 3 of 8 samples and in 1 of 4 sources.

Trichloroethylene was detected above its analytical quantification level in 1 of 8 samples and in 1 of 4 sources.

Chlordane was detected above its analytical quantification level in 1 of 7 samples and in 1 of 5 sources.

4,4'-DDE was detected above its analytical quantification level in 1 of 7 samples and in 1 of 5 sources.

Alpha-endosulfan was detected above its analytical quantification level in 1 of 7 samples and in 1 of 5 sources.

Beta-endosulfan was detected above its analytical quantification level in 1 of 7 samples and in 1 of 5 sources.

Alpha-BHC was detected above its analytical quantification level in 1 of 7 samples and in 1 of 5 sources.

Beta-BHC was detected above its analytical quantification level in 1 of 7 samples and in 1 of 5 sources.

Nickel was detected above its analytical quantification level in 6 of 9 samples; however, it was only found above the level considered achievable by specific treatment methods (0.22 mg/l) in 1 of 9 samples and in 1 of 5 sources.

Pollutants Selected for Consideration in Establishing Regulations for the Rolling with Neat Oils Core Waste Streams. The toxic pollutants listed below are those not eliminated from consideration for any of the reasons listed above; therefore, each was selected for consideration in establishing regulations for these wastewater streams. The pollutants are individually discussed following the list.

1. acenaphthene
38. ethylbenzene
39. fluoranthene
55. naphthalene
62. N-nitrosodiphenylamine
65. phenol
66. bis(2-ethylhexyl) phthalate
68. di-n-butyl phthalate
70. diethyl phthalate
80. fluorene
84. pyrene
86. toluene
97. endosulfan sulfate
98. endrin
99. endrin aldehyde

106.	PCB-1242	(a)
107.	PCB-1254	(a)
108.	PCB-1221	(a)
109.	PCB-1232	(b)
110.	PCB-1248	(b)
111.	PCB-1260	(b)
112.	PCB-1016	(b)
119.	chromium	
120.	copper	
121.	cyanide	
122.	lead	
128.	zinc	

(a), (b) Reported together

Acenaphthene was detected above its analytical quantification level and above the level considered achievable by specific treatment methods (0.010 mg/l) in 2 of 9 samples and in 2 of 6 sources.

Ethylbenzene was detected above its analytical quantification level in 5 of 8 samples and above the level considered achievable by specific treatment methods (0.050 mg/l) in 2 of 8 samples and in 2 of 4 sources.

Fluoranthene was detected above its analytical quantification level and above the level considered achievable by specific treatment methods (0.010 mg/l) in 3 of 9 samples and in 2 of 6 sources.

Naphthalene was detected above its analytical quantification level and above the level considered achievable by specific treatment methods (0.050 mg/l) in 2 of 9 samples and in 2 of 6 sources.

N-nitrosodiphenylamine was detected above its analytical quantification level in 3 of 9 samples and in 2 of 6 sources.

Phenol was detected above its analytical quantification level and above the level considered achievable by specific treatment methods (0.050 mg/l) in 3 of 10 samples and in 3 of 6 sources.

Bis(2-ethylhexyl) phthalate was found above its analytical quantification level in 5 of 9 samples. The maximum concentration observed was 2.900 mg/l.

Di-n-butyl phthalate was found above its analytical quantification level in 4 of 9 samples, ranging from 0.330 to 19.000 mg/l.

Diethyl phthalate was found above its analytical quantification level in 4 of 9 samples. Values ranged from 0.220 to 3.100 mg/l.

Fluorene was detected above its analytical quantification level and above the level considered achievable by specific treatment methods (0.010 mg/l) in 5 of 9 samples and in 4 of 6 sources.

Pyrene was detected above its analytical quantification level and above the level considered achievable by specific treatment methods (0.010 mg/l) in 4 of 9 samples and in 3 of 6 sources.

Toluene was detected above its analytical quantification level in 5 of 8 samples and above the level considered achievable by specific treatment methods (0.050 mg/l) in 3 of 8 samples and in 2 of 4 sources.

Endosulfan sulfate was detected above its analytical quantification level in 2 of 7 samples and in 2 of 5 sources.

Endrin was detected above its analytical quantification level in 2 of 7 samples and in 2 of 5 sources.

Endrin aldehyde was detected above its analytical quantification level in 2 of 7 samples and in 2 of 5 sources.

The seven organic toxic pollutant PCB's (polychlorinated biphenyls) are not cleanly separated by the analytical protocol employed in this study; thus, they are reported in two groups. Each of the two PCB groups was reported present above its analytical quantification level in 3 of 7 samples and in 3 of 5 sources at one plant.

Chromium was detected above its analytical quantification level in 8 of 9 samples and above the level considered achievable by specific treatment methods (0.007 mg/l) in 3 of 9 samples and in 3 of 5 sources.

Copper was detected above its analytical quantification level in 8 of 9 samples and above the level considered achievable by specific treatment methods (0.39 mg/l) in 5 of 9 samples and in 4 of 5 sources.

Cyanide was detected above its analytical quantification level in 8 of 10 samples and above the level considered achievable by specific treatment methods (0.047 mg/l) in 6 of 10 samples and in 3 of 6 sources.

Lead was detected above its analytical quantification level in 8 of 9 samples and above the level considered achievable by specific treatment methods (0.08 mg/l) in 6 of 9 samples and in 4 of 5 sources.

Zinc was detected above its analytical quantification level in 8 of 9 samples and above the level considered achievable by specific treatment methods (0.23 mg/l) in 6 of 9 samples and in 4 of 5 sources.

Rolling with Emulsions Core Waste Streams

The following waste streams will receive a pollutant discharge allocation in the core of the Rolling with Emulsions Subcategory:

Rolling with Emulsions Spent Emulsions
Roll Grinding Spent Emulsions
Sawing Spent Lubricants
Miscellaneous Nondescript Wastewater Sources

No specific pollutant data were considered for the miscellaneous nondescript wastewater sources. Due to a lack of data, the rolling with emulsions spent emulsions, the roll grinding spent emulsion, and the sawing spent lubricant are considered to be similar. The same pollutant selection is considered equally applicable to both of these waste streams. As discussed previously, the Agency did not sample the roll grinding spent emulsion and sawing spent lubricant. However, the characteristics of these wastes are determined to be the same as the rolling spent emulsion, therefore, the characteristics of rolling spent emulsions are transferable to the roll grinding spent emulsion and the sawing spent emulsion.

Pollutants Never Detected. The toxic pollutants listed below were not detected in any samples from these wastewater streams; therefore, they were not selected for consideration in establishing regulations for these wastewater streams.

3. acrylonitrile
5. benzidine
6. carbon tetrachloride
8. 1,2,4-trichlorobenzene
9. hexachlorobenzene
10. 1,2-dichloroethane
12. hexachloroethane
13. 1,1-dichloroethane
14. 1,1,2-trichloroethane
16. chloroethane
17. DELETED
18. bis(2-chloroethyl) ether
19. 2-chloroethyl vinyl ether
20. 2-chloronaphthalene
22. p-chloro-m-cresol
24. 2-chlorophenol
25. 1,2-dichlorobenzene

26. 1,3-dichlorobenzene
27. 1,4-dichlorobenzene
28. 3,3'-dichlorobenzidine
29. 1,1-dichloroethylene
31. 2,4-dichlorophenol
32. 1,2-dichloropropane
33. 1,3-dichloropropylene
34. 2,4-dimethylphenol
35. 2,4-dinitrotoluene
36. 2,6-dinitrotoluene
37. 1,2-diphenylhydrazine
40. 4-chlorophenyl phenyl ether
41. 4-bromophenyl phenyl ether
42. bis(2-chloroisopropyl) ether
43. bis(2-chloroethoxy) methane
45. methyl chloride
46. methyl bromide
47. bromoform
48. dichlorobromomethane
49. DELETED
50. DELETED
51. chlorodibromomethane
52. hexachlorobutadiene
53. hexachlorocyclopentadiene
54. isophorone
56. nitrobenzene
57. 2-nitrophenol
58. 4-nitrophenol
59. 2,4-dinitrophenol
60. 4,6-dinitro-o-cresol
61. N-nitrosodimethylamine
63. N-nitrosodi-n-propylamine
69. di-n-octyl phthalate
73. benzo(a)pyrene
74. benzo(b)fluoranthene
75. benzo(k)fluoranthene
79. benzo(ghi)perylene
82. dibenzo(a,h)anthracene
83. indeno(1,2,3-c,d)pyrene
88. vinyl chloride
89. aldrin
90. dieldrin
94. 4,4'-DDD
100. heptachlor
101. heptachlor epoxide
104. gamma-BHC
105. delta-BHC
113. toxaphene
116. asbestos
129. 2,3,7,8-tetrachlorodibenzo-p-dioxin

Pollutants Never Found Above Their Analytical Quantification Level. The toxic pollutants listed below were never found above their analytical quantification level in any samples from these wastewater streams; therefore, they were not selected for consideration in establishing regulations for these wastewater streams.

11. 1,1,1-trichloroethane
15. 1,1,2,2-tetrachloroethane
64. pentachlorophenol
72. benzo(a)anthracene
92. 4,4-DDT
114. antimony
117. beryllium
125. selenium
126. silver
127. thallium

Pollutants Detected Below Levels Achievable by Treatment. The toxic pollutants below were found above their analytical quantification level only at a concentration below the concentration considered achievable by specific available treatment methods; therefore, they were not selected for consideration in establishing regulations for these wastewater streams. The pollutants are individually discussed following the list.

2. acrolein
4. benzene
7. chlorobenzene
21. 2,4,6-trichlorophenol
23. chloroform
44. methylene chloride
115. arsenic
118. cadmium
123. mercury

Acrolein was detected above its analytical quantification level in 2 of 8 samples; however, it was not found above the level considered achievable by specific treatment methods (0.100 mg/l).

Benzene was detected above its analytical quantification level in 1 of 6 samples; however, it was not found above the level considered achievable by specific treatment methods (0.05 mg/l).

Chlorobenzene was detected above its analytical quantification level in 1 of 8 samples; however, it was not found above the level considered achievable by specific treatment methods (0.025 mg/l).

2,4,6-Trichlorophenol was detected above its analytical quantification level in 1 of 9 samples; however, it was not found above the level considered achievable by specific treatment methods (0.025 mg/l).

Chloroform was detected above its analytical quantification level in 2 of 8 samples; however, it was not found above the level considered achievable by specific treatment methods (0.1 mg/l).

Methylene chloride was found above its analytical quantification level in 5 of 8 samples, with values ranging from 0.360 to 1.300 mg/l. This pollutant is not attributable to specific materials or processes associated with rolling with emulsions; however, it is a common solvent used in analytical laboratories, and is not expected to be present in raw wastewaters at concentrations above the level considered achievable by specific available treatment methods (0.100 mg/l).

Arsenic was detected above its analytical quantification level in 4 of 9 samples; however, it was not found above the level considered achievable by specific treatment methods (0.34 mg/l).

Cadmium was not detected above its analytical quantification level in 5 of 9 samples; however, it was only found above the level considered achievable by specific treatment methods (0.049 mg/l) in 2 of 9 samples and in 2 of 5 sources. Both of these sources were at a single plant.

Mercury was detected above its analytical quantification level in 3 of 9 samples; however, it was not found above the level considered achievable by specific treatment methods (0.036 mg/l).

Pollutants Detected in a Small Number of Sources. The toxic pollutants listed below were found above their analytical quantification level at only a small number of sources within the category and are uniquely related to only those sources; therefore, they were not selected for consideration in establishing regulations for these wastewater streams. The pollutants are individually discussed following the list.

30. 1,2-*trans*-dichloroethylene
67. butyl benzyl phthalate
71. dimethyl phthalate
76. chrysene
77. acenaphthylene
78. anthracene (a)
81. phenanthrene (a)
85. tetrachloroethylene
87. trichloroethylene
91. chlordane

93. 4,4'-DDE
95. alpha-endosulfan
96. beta-endosulfan
102. alpha-BHC
103. beta-BHC
124. nickel

(a) Reported together

1,2-trans-Dichloroethylene was detected above its analytical quantification level in 1 of 8 samples and in 1 of 4 sources.

Butyl benzyl phthalate was detected above its analytical quantification level in 1 of 9 samples and in 1 of 6 sources.

Dimethyl phthalate was detected above its analytical quantification level in 1 of 9 samples and in 1 of 6 sources.

Chrysene was detected above its analytical quantification level in 1 of 9 samples and in 1 of 6 sources.

Acenaphthylene was detected above its analytical quantification level in 1 of 9 samples and in 1 of 6 sources.

Anthracene and phenanthrene are not cleanly separated by the analytical protocol employed in this study; thus, they are reported together. The sum of these pollutants was reported at values greater than their analytical quantification level in 2 of 9 samples and in 1 of 6 sources.

Tetrachloroethylene was detected above its analytical quantification level in 5 of 8 samples; however, it was only found above the level considered achievable by specific treatment methods (0.05 mg/l) in 3 of 8 samples and in 1 of 4 sources.

Trichloroethylene was detected above its analytical quantification level in 1 of 8 samples and in 1 of 4 sources.

Chlordane was detected above its analytical quantification level in 1 of 7 samples and in 1 of 5 sources.

4,4'-DDE was detected above its analytical quantification level in 1 of 7 samples and in 1 of 5 sources.

Alpha-endosulfan was detected above its analytical quantification level in 1 of 7 samples and in 1 of 5 sources.

Beta-endosulfan was detected above its analytical quantification level in 1 of 7 samples and in 1 of 5 sources.

Alpha-BHC was detected above its analytical quantification level in 1 of 7 samples and in 1 of 5 sources.

Beta-BHC was detected above its analytical quantification level in 1 of 7 samples and in 1 of 5 sources.

Nickel was detected above its analytical quantification level in 6 of 9 samples; however, it was only found above the level considered achievable by specific treatment methods (0.22 mg/l) in 1 of 9 samples and in 1 of 5 sources.

Pollutants Selected for Consideration in Establishing Regulations for the Rolling with Emulsions Core Waste Streams. The toxic pollutants listed below are those not eliminated from consideration for any of the reasons listed above; therefore, each was selected for consideration in establishing regulations for these wastewater streams. The pollutants are individually discussed following the list.

1.	acenaphthene	
38.	ethylbenzene	
39.	fluoranthene	
55.	naphthalene	
62.	N-nitrosodiphenylamine	
65.	phenol	
66.	bis(2-ethylhexyl) phthalate	
68.	di-n-butyl phthalate	
70.	diethyl phthalate	
80.	fluorene	
84.	pyrene	
86.	toluene	
97.	endosulfan sulfate	
98.	endrin	
99.	endrin aldehyde	
106.	PCB-1242	(a)
107.	PCB-1254	(a)
108.	PCB-1221	(a)
109.	PCB-1232	(b)
110.	PCB-1248	(b)
111.	PCB-1260	(b)
112.	PCB-1016	(b)
119.	chromium	
120.	copper	
121.	cyanide	
122.	lead	
128.	zinc	

(a), (b) Reported together

Acenaphthene was detected above its analytical quantification level and above the level considered achievable by specific treatment methods (0.010 mg/1) in 2 of 9 samples and in 2 of 6 sources.

Ethylbenzene was detected above its analytical quantification level in 5 of 8 samples and above the level considered achievable by specific treatment methods (0.050 mg/1) in 2 of 8 samples and in 2 of 4 sources.

Fluoranthene was detected above its analytical quantification level and above the level considered achievable by specific treatment methods (0.010 mg/1) in 3 of 9 samples and in 2 of 6 sources.

Naphthalene was detected above its analytical quantification level and above the level considered achievable by specific treatment methods (0.050 mg/1) in 2 of 9 samples and in 2 of 6 sources.

N-nitrosodiphenylamine was detected above its analytical quantification level in 3 of 9 samples and in 2 of 6 sources.

Phenol was detected above its analytical quantification level and above the level considered achievable by specific treatment methods (0.050 mg/1) in 3 of 10 samples and in 3 of 6 sources.

Bis(2-ethylhexyl) phthalate was found above its analytical quantification level in 5 of 9 samples. The maximum concentration observed was 2.900 mg/1.

Di-n-butyl phthalate was found above its analytical quantification level in 4 of 9 samples, ranging from 0.330 to 19.000 mg/1.

Diethyl phthalate was found above its analytical quantification level in 4 of 9 samples. Values ranged from 0.220 to 3.100 mg/1.

Fluorene was detected above its analytical quantification level and above the level considered achievable by specific treatment methods (0.010 mg/1) in 5 of 9 samples and in 4 of 6 sources.

Pyrene was detected above its analytical quantification level and above the level considered achievable by specific treatment methods (0.010 mg/1) in 4 of 9 samples and in 3 of 6 sources.

Toluene was detected above its analytical quantification level in 5 of 8 samples and above the level considered achievable by specific treatment methods (0.050 mg/1) in 3 of 8 samples and in 2 of 4 sources.

Endosulfan sulfate was detected above its analytical quantification level in 2 of 7 samples and in 2 of 5 sources.

Endrin was detected above its analytical quantification level in 2 of 7 samples and in 2 of 5 sources.

Endrin aldehyde was detected above its analytical quantification level in 2 of 7 samples and in 2 of 5 sources.

The seven organic toxic pollutant PCB's (polychlorinated biphenyls) are not cleanly separated by the analytical protocol employed in this study; thus, they are reported in two groups. Each of the two PCB groups was reported present above its analytical quantification level in 3 of 7 samples and in 3 of 5 sources at one plant.

Chromium was detected above its analytical quantification level in 8 of 9 samples and above the level considered achievable by specific treatment methods (0.007 mg/l) in 3 of 9 samples and in 3 of 5 sources.

Copper was detected above its analytical quantification level in 8 of 9 samples and above the level considered achievable by specific treatment methods (0.39 mg/l) in 5 of 9 samples and in 4 of 5 sources.

Cyanide was detected above its analytical quantification level in 8 of 10 samples and above the level considered achievable by specific treatment methods (0.047 mg/l) in 6 of 10 samples and in 3 of 6 sources.

Lead was detected above its analytical quantification level in 8 of 9 samples and above the level considered achievable by specific treatment methods (0.08 mg/l) in 6 of 9 samples and in 4 of 5 sources.

Zinc was detected above its analytical quantification level in 8 of 9 samples and above the level considered achievable by specific treatment methods (0.23 mg/l) in 6 of 9 samples and in 4 of 5 sources.

Extrusion Core Waste Streams

The following waste streams will receive a pollutant discharge allocation in the core of the Extrusion Subcategory:

Extrusion Die Cleaning Bath
Extrusion Die Cleaning Rinse
Extrusion Die Cleaning or Press Scrubber Liquor
Sawing Spent Lubricant
Miscellaneous Nondescript Wastewater Sources

No specific pollutant data were considered for the miscellaneous nondescript wastewater sources. For the extrusion die cleaning or press scrubber liquor, no toxic metals were detected above their analytical quantification level and above the level considered achievable by specific available treatment methods. Due to a lack of data, the toxic organics in the extrusion die cleaning or press scrubber liquor and the cleaning or etching scrubber liquor are considered to be similar. The same pollutant selection is considered equally applicable to both of these waste streams. As will be discussed in the section on pollutant selection for ancillary waste streams, no toxic organics were selected for consideration in establishing regulations for the cleaning or etching scrubber liquor wastewater stream. Due to a lack of data, the extrusion die cleaning bath and the cleaning or etching bath are considered to be similar. The same pollutant selection is considered equally applicable to both of these waste streams. As will be discussed in the section on pollutant selection for ancillary waste streams, cadmium, chromium, copper, cyanide, lead, nickel, and zinc were selected for consideration in establishing regulations for the cleaning or etching bath wastewater stream. As discussed previously, the Agency did not sample the sawing spent emulsion. The characteristics of this waste are determined to be the same as the rolling spent emulsion, therefore, the characteristics of rolling spent emulsions are transferable to the sawing spent emulsion.

Pollutants Never Detected. The toxic pollutants listed below were not detected in any samples from these wastewater streams; therefore, they were not selected for consideration in establishing regulations for these wastewater streams.

3. acrylonitrile
5. benzidine
6. carbon tetrachloride
8. 1,2,4-trichlorobenzene
9. hexachlorobenzene
10. 1,2-dichloroethane
12. hexachloroethane
13. 1,1-dichloroethane
14. 1,1,2-trichloroethane
16. chloroethane
17. DELETED
18. bis(2-chloroethyl) ether
19. 2-chloroethyl vinyl ether
20. 2-chloronaphthalene
22. p-chloro-m-cresol
24. 2-chlorophenol
25. 1,2-dichlorobenzene
26. 1,3-dichlorobenzene
27. 1,4-dichlorobenzene
28. 3,3'-dichlorobenzidine

29. 1,1-dichloroethylene
31. 2,4-dichlorophenol
32. 1,2-dichloropropane
33. 1,3-dichloropropylene
34. 2,4-dimethylphenol
35. 2,4-dinitrotoluene
36. 2,6-dinitrotoluene
37. 1,2-diphenylhydrazine
40. 4-chlorophenyl phenyl ether
41. 4-bromophenyl phenyl ether
42. bis(2-chloroisopropyl) ether
43. bis(2-chloroethoxy) methane
45. methyl chloride
46. methyl bromide
47. bromoform
48. dichlorobromomethane
49. DELETED
50. DELETED
51. chlorodibromomethane
52. hexachlorobutadiene
53. hexachlorocyclopentadiene
54. isophorone
56. nitrobenzene
57. 2-nitrophenol
58. 4-nitrophenol
59. 2,4-dinitrophenol
60. 4,6-dinitro-o-cresol
61. N-nitrosodimethylamine
63. N-nitrosodi-n-propylamine
69. di-n-octyl phthalate
73. benzo(a)pyrene
74. benzo(b)fluoranthene
75. benzo(k)fluoranthene
79. benzo(ghi)perylene
82. dibenzo(a,h)anthracene
83. indeno(1,2,3-c,d)pyrene
88. vinyl chloride
89. aldrin
90. dieldrin
94. 4,4'-DDD
100. heptachlor
101. heptachlor epoxide
104. gamma-BHC
105. delta-BHC
113. toxaphene
116. asbestos
129. 2,3,7,8-tetrachlorodibenzo-p-dioxin

Pollutants Never Found Above Their Analytical Quantification Level. The toxic pollutants listed below were never found above their analytical quantification level in any samples from these wastewater streams; therefore, they were not selected for consideration in establishing regulations for these wastewater streams.

11. 1,1,1-trichloroethane
15. 1,1,2,2-tetrachloroethane
64. pentachlorophenol
72. benzo(a)anthracene
92. 4,4-DDT
117. beryllium
126. silver

Pollutants Detected Below Levels Achievable by Treatment. The toxic pollutants below were found above their analytical quantification level only at a concentration below the concentration considered achievable by specific available treatment methods; therefore, they were not selected for consideration in establishing regulations for these wastewater streams. The pollutants are individually discussed following the list.

2. acrolein
4. benzene
7. chlorobenzene
21. 2,4,6-trichlorophenol
23. chloroform
44. methylene chloride
114. antimony
115. arsenic
118. cadmium
123. mercury

Acrolein was detected above its analytical quantification level in 2 of 8 samples; however, it was not found above the level considered achievable by specific treatment methods (0.100 mg/l).

Benzene was detected above its analytical quantification level in 2 of 8 samples; however, it was not found above the level considered achievable by specific treatment methods (0.05 mg/l).

Chlorobenzene was detected above its analytical quantification level in 1 of 8 samples; however, it was not found above the level considered achievable by specific treatment methods (0.025 mg/l).

2,4,6-Trichlorophenol was detected above its analytical quantification level in 1 of 9 samples; however, it was not found above the level considered achievable by specific treatment methods (0.025 mg/l).

Chloroform was detected above its analytical quantification level in 2 of 8 samples; however, it was not found above the level considered achievable by specific treatment methods (0.1 mg/l).

Methylene chloride was found above its analytical quantification level in 7 of 10 samples, with values ranging from 0.021 to 1.300 mg/l. This pollutant is not attributable to specific materials or processes associated with extrusion; however, it is a common solvent used in analytical laboratories, and is not expected to be present in raw wastewaters at concentrations above the level considered achievable by specific available treatment methods (0.100 mg/l).

Antimony was detected above its analytical quantification level in 3 of 5 samples; however, it was not found above the level considered achievable by specific treatment methods (0.034 mg/l).

Arsenic was detected above its analytical quantification level in 7 of 14 samples; however, it was not found above the level considered achievable by specific treatment methods (0.34 mg/l).

Cadmium was detected above its analytical quantification level in 8 of 14 samples; however, it was only found above the level considered achievable by specific treatment methods (0.049 mg/l) in 2 of 14 samples and in 2 of 8 sources. Both of these sources were at a single plant.

Mercury was detected above its analytical quantification level in 4 of 14 samples; however, it was not found above the level considered achievable by specific treatment methods (0.036 mg/l).

Pollutants Detected in a Small Number of Sources. The toxic pollutants listed below were found above their analytical quantification level at only a small number of sources within the category and are uniquely related to only those sources; therefore, they were not selected for consideration in establishing regulations for these wastewater streams. The pollutants are individually discussed following the list.

30. 1,2-*trans*-dichloroethylene
67. butyl benzyl phthalate
71. dimethyl phthalate
76. chrysene
77. acenaphthylene
78. anthracene (a)
81. phenanthrene (a)
85. tetrachloroethylene
87. trichloroethylene
91. chlordane
93. 4,4'-DDE

95. alpha-endosulfan
96. beta-endosulfan
102. alpha-BHC
103. beta-BHC
124. nickel
125. selenium
127. thallium

(a) Reported together

1,2-trans-Dichloroethylene was detected above its analytical quantification level in 1 of 8 samples and in 1 of 4 sources.

Butyl benzyl phthalate was detected above its analytical quantification level in 1 of 9 samples and in 1 of 6 sources.

Dimethyl phthalate was detected above its analytical quantification level in 1 of 9 samples and in 1 of 6 sources.

Chrysene was detected above its analytical quantification level in 1 of 9 samples and in 1 of 6 sources.

Acenaphthylene was detected above its analytical quantification level in 1 of 9 samples and in 1 of 6 sources.

Anthracene and phenanthrene are not cleanly separated by the analytical protocol employed in this study; thus, they are reported together. The sum of these pollutants was reported at values greater than their analytical quantification level in 2 of 9 samples and in 1 of 6 sources.

Tetrachloroethylene was detected above its analytical quantification level in 5 of 8 samples; however, it was only found above the level considered achievable by specific treatment methods (0.05 mg/1) in 3 of 8 samples and in 1 of 4 sources.

Trichloroethylene was detected above its analytical quantification level in 1 of 8 samples and in 1 of 4 sources.

Chlordane was detected above its analytical quantification level in 1 of 7 samples and in 1 of 5 sources.

4,4'-DDE was detected above its analytical quantification level in 1 of 7 samples and in 1 of 5 sources.

Alpha-endosulfan was detected above its analytical quantification level in 1 of 7 samples and in 1 of 5 sources.

Beta-endosulfan was detected above its analytical quantification level in 1 of 7 samples and in 1 of 5 sources.

Alpha-BHC was detected above its analytical quantification level in 1 of 7 samples and in 1 of 5 sources.

Beta-BHC was detected above its analytical quantification level in 1 of 7 samples and in 1 of 5 sources.

Nickel was detected above its analytical quantification level in 9 of 14 samples; however, it was only found above the level considered achievable by specific treatment methods (0.22 mg/l) in 1 of 14 samples and in 1 of 8 sources.

Selenium was detected above its analytical quantification level in 1 of 5 samples; however, it was only found above the level considered achievable by specific treatment methods (0.007 mg/l) in 1 of 5 samples and in 1 of 3 sources.

Thallium was detected above its analytical quantification level in 2 of 5 samples; however, it was only found above the level considered achievable by specific treatment methods (0.34 mg/l) in 1 of 5 samples and in 1 of 3 sources.

Pollutants Selected for Consideration in Establishing Regulations for the Extrusion Core Waste Streams. The toxic pollutants listed below are those not eliminated from consideration for any of the reasons listed above; therefore, each was selected for consideration in establishing regulations for these wastewater streams. The pollutants are individually discussed following the list.

1. acenaphthene
38. ethylbenzene
39. fluoranthene
55. naphthalene
62. N-nitrosodiphenylamine
65. phenol
66. bis(2-ethylhexyl) phthalate
68. di-n-butyl phthalate
70. diethyl phthalate
80. fluorene
84. pyrene
86. toluene
97. endosulfan sulfate
98. endrin
99. endrin aldehyde
106. PCB-1242 (a)
107. PCB-1254 (a)
108. PCB-1221 (a)
109. PCB-1232 (b)
110. PCB-1248 (b)
111. PCB-1260 (b)

112. PCB-1016 (b)
119. chromium
120. copper
121. cyanide
122. lead
128. zinc

(a), (b) Reported together

Acenaphthene was detected above its analytical quantification level and above the level considered achievable by specific treatment methods (0.010 mg/l) in 2 of 9 samples and in 2 of 6 sources.

Ethylbenzene was detected above its analytical quantification level in 5 of 8 samples and above the level considered achievable by specific treatment methods (0.050 mg/l) in 2 of 8 samples and in 2 of 4 sources.

Fluoranthene was detected above its analytical quantification level and above the level considered achievable by specific treatment methods (0.010 mg/l) in 3 of 9 samples and in 2 of 6 sources.

Naphthalene was detected above its analytical quantification level and above the level considered achievable by specific treatment methods (0.050 mg/l) in 2 of 9 samples and in 2 of 6 sources.

N-nitrosodiphenylamine was detected above its analytical quantification level in 3 of 9 samples and in 2 of 6 sources.

Phenol was detected above its analytical quantification level and above the level considered achievable by specific treatment methods (0.050 mg/l) in 3 of 10 samples and in 3 of 6 sources.

Bis(2-ethylhexyl) phthalate was found above its analytical quantification level in 7 of 11 samples. The maximum concentration observed was 2.900 mg/l.

Di-n-butyl phthalate was found above its analytical quantification level in 4 of 9 samples, ranging from 0.330 to 19.000 mg/l.

Diethyl phthalate was found above its analytical quantification level in 4 of 9 samples. Values ranged from 0.220 to 3.100 mg/l.

Fluorene was detected above its analytical quantification level and above the level considered achievable by specific treatment methods (0.010 mg/l) in 5 of 9 samples and in 4 of 6 sources.

Pyrene was detected above its analytical quantification level and above the level considered achievable by specific treatment methods (0.010 mg/l) in 4 of 9 samples and in 3 of 6 sources.

Toluene was detected above its analytical quantification level in 6 of 10 samples and above the level considered achievable by specific treatment methods (0.050 mg/l) in 3 of 10 samples and in 2 of 6 sources.

Endosulfan sulfate was detected above its analytical quantification level in 2 of 7 samples and in 2 of 5 sources.

Endrin was detected above its analytical quantification level in 2 of 7 samples and in 2 of 5 sources.

Endrin aldehyde was detected above its analytical quantification level in 2 of 7 samples and in 2 of 5 sources.

The seven organic toxic pollutant PCB's (polychlorinated biphenyls) are not cleanly separated by the analytical protocol employed in this study; thus, they are reported in two groups. Each of the two PCB groups was reported present above its analytical quantification level in 3 of 7 samples and in 3 of 5 sources at one plant.

Chromium was detected above its analytical quantification level in 13 of 14 samples and above the level considered achievable by specific treatment methods (0.007 mg/l) in 5 of 14 samples and in 5 of 8 sources.

Copper was detected above its analytical quantification level in 13 of 14 samples and above the level considered achievable by specific treatment methods (0.39 mg/l) in 7 of 14 samples and in 5 of 8 sources.

Cyanide was detected above its analytical quantification level in 13 of 15 samples and above the level considered achievable by specific treatment methods (0.047 mg/l) in 6 of 15 samples and in 3 of 9 sources.

Lead was detected above its analytical quantification level in 13 of 14 samples and above the level considered achievable by specific treatment methods (0.08 mg/l) in 11 of 14 samples and in 7 of 8 sources.

Zinc was detected above its analytical quantification level in 13 of 14 samples and above the level considered achievable by specific treatment methods (0.23 mg/l) in 9 of 14 samples and in 5 of 8 sources.

Forging Core Waste Streams

The following waste streams will receive a pollutant discharge allocation in the core of the Forging Subcategory:

Sawing Spent Lubricant
Miscellaneous Nondescript Wastewater Sources

No specific pollutant data were considered for the miscellaneous nondescript wastewater sources. As discussed previously, the Agency did not sample the sawing spent emulsion. The characteristics of this waste are determined to be the same as the rolling spent emulsion, therefore, the characteristics of rolling spent emulsions are transferable to the sawing spent emulsion.

Pollutants Never Detected. The toxic pollutants listed below were not detected in any samples from these wastewater streams; therefore, they were not selected for consideration in establishing regulations for these wastewater streams.

3. acrylonitrile
5. benzidine
6. carbon tetrachloride
8. 1,2,4-trichlorobenzene
9. hexachlorobenzene
10. 1,2-dichloroethane
12. hexachloroethane
13. 1,1-dichloroethane
14. 1,1,2-trichloroethane
16. chloroethane
17. DELETED
18. bis(2-chloroethyl) ether
19. 2-chloroethyl vinyl ether
20. 2-chloronaphthalene
22. p-chloro-m-cresol
24. 2-chlorophenol
25. 1,2-dichlorobenzene
26. 1,3-dichlorobenzene
27. 1,4-dichlorobenzene
28. 3,3'-dichlorobenzidine
29. 1,1-dichloroethylene
31. 2,4-dichlorophenol
32. 1,2-dichloropropane
33. 1,3-dichloropropylene
34. 2,4-dimethylphenol
35. 2,4-dinitrotoluene
36. 2,6-dinitrotoluene
37. 1,2-diphenylhydrazine
40. 4-chlorophenyl phenyl ether
41. 4-bromophenyl phenyl ether

42. bis(2-chloroisopropyl) ether
43. bis(2-chloroethoxy) methane
45. methyl chloride
46. methyl bromide
47. bromoform
48. dichlorobromomethane
49. DELETED
50. DELETED
51. chlorodibromomethane
52. hexachlorobutadiene
53. hexachlorocyclopentadiene
54. isophorone
56. nitrobenzene
57. 2-nitrophenol
58. 4-nitrophenol
59. 2,4-dinitrophenol
60. 4,6-dinitro-o-cresol
61. N-nitrosodimethylamine
63. N-nitrosodi-n-propylamine
69. di-n-octyl phthalate
73. benzo(a)pyrene
74. benzo(b)fluoranthene
75. benzo(k)fluoranthene
79. benzo(ghi)perylene
82. dibenzo(a,h)anthracene
83. indeno(1,2,3-c,d)pyrene
89. vinyl chloride
90. aldrin
91. dieldrin
95. 4,4'-DDD
101. heptachlor
102. heptachlor epoxide
105. gamma-BHC
106. delta-BHC
114. toxaphene
117. asbestos
129. 2,3,7,8-tetrachlorodibenoz-p-dioxin

Pollutants Never Found Above Their Analytical Quantification Level. The toxic pollutants listed below were never found above their analytical quantification level in any samples from these wastewater streams; therefore, they were not selected for consideration in establishing regulations for these wastewater streams.

11. 1,1,1-trichloroethane
15. 1,1,2,2-tetrachloroethane
64. pentachlorophenol
72. benzo(a)anthracene
92. 4,4-DDT
114. antimony

117. beryllium
125. selenium
126. silver
127. thallium

Pollutants Detected Below Levels Achievable by Treatment. The toxic pollutants below were found above their analytical quantification level only at a concentration below the concentration considered achievable by specific available treatment methods; therefore, they were not selected for consideration in establishing regulations for these wastewater streams. The pollutants are individually discussed following the list.

2. acrolein
4. benzene
7. chlorobenzene
21. 2,4,6-trichlorophenol
23. chloroform
44. methylene chloride
115. arsenic
118. cadmium
123. mercury

Acrolein was detected above its analytical quantification level in 2 of 8 samples; however, it was not found above the level considered achievable by specific treatment methods (0.100 mg/l).

Benzene was detected above its analytical quantification level in 1 of 6 samples; however, it was not found above the level considered achievable by specific treatment methods (0.05 mg/l).

Chlorobenzene was detected above its analytical quantification level in 1 of 8 samples; however, it was not found above the level considered achievable by specific treatment methods (0.025 mg/l).

2,4,6-Trichlorophenol was detected above its analytical quantification level in 1 of 9 samples; however, it was not found above the level considered achievable by specific treatment methods (0.025 mg/l).

Chloroform was detected above its analytical quantification level in 2 of 8 samples; however, it was not found above the level considered achievable by specific treatment methods (0.1 mg/l).

Methylene chloride was found above its analytical quantification level in 5 of 8 samples, with values ranging from 0.360 to 1.300 mg/l. This pollutant is not attributable to specific materials or processes associated with forging; however, it is a common solvent used in analytical laboratories, and is not expected to

be present in raw wastewaters at concentrations above the level considered achievable by specific available treatment methods (0.100 mg/l).

Arsenic was detected above its analytical quantification level in 4 of 9 samples; however, it was not found above the level considered achievable by specific treatment methods (0.34 mg/l).

Cadmium was detected above its analytical quantification level in 5 of 9 samples; however, it was only found above the level considered achievable by specific treatment methods (0.049 mg/l) in 2 of 9 samples and in 2 of 5 sources. Both of these sources were at a single plant.

Mercury was detected above its analytical quantification level in 3 of 9 samples; however, it was not found above the level considered achievable by specific treatment methods (0.036 mg/l).

Pollutants Detected in a Small Number of Sources. The toxic pollutants listed below were found above their analytical quantification level at only a small number of sources within the category and are uniquely related to only those sources; therefore, they were not selected for consideration in establishing regulations for these wastewater streams. The pollutants are individually discussed following the list.

30. 1,2-*trans*-dichloroethylene
67. butyl benzyl phthalate
71. dimethyl phthalate
76. chrysene
77. acenaphthylene
78. anthracene (a)
81. phenanthrene (a)
85. tetrachloroethylene
86. trichloroethylene
91. chlordane
93. 4,4'-DDE
95. alpha-endosulfan
96. beta-endosulfan
102. alpha-BHC
103. beta-BHC
124. nickel

(a) Reported together

1,2-*trans*-Dichloroethylene was detected above its analytical quantification level in 1 of 8 samples and in 1 of 4 sources.

Butyl benzyl phthalate was detected above its analytical quantification level in 1 of 9 samples and in 1 of 6 sources.

Dimethyl phthalate was detected above its analytical quantification level in 1 of 9 samples and in 1 of 6 sources.

Chrysene was detected above its analytical quantification level in 1 of 9 samples and in 1 of 6 sources.

Acenaphthylene was detected above its analytical quantification level in 1 of 9 samples and in 1 of 6 sources.

Anthracene and phenanthrene are not cleanly separated by the analytical protocol employed in this study; thus, they are reported together. The sum of these pollutants was reported at values greater than their analytical quantification level in 2 of 9 samples and in 1 of 6 sources.

Tetrachloroethylene was detected above its analytical quantification level in 5 of 8 samples; however, it was only found above the level considered achievable by specific treatment methods (0.05 mg/l) in 3 of 8 samples and in 1 of 4 sources.

Trichloroethylene was detected above its analytical quantification level in 1 of 8 samples and in 1 of 4 sources.

Chlordane was detected above its analytical quantification level in 1 of 7 samples and in 1 of 5 sources.

4,4'-DDE was detected above its analytical quantification level in 1 of 7 samples and in 1 of 5 sources.

Alpha-endosulfan was detected above its analytical quantification level in 1 of 7 samples and in 1 of 5 sources.

Beta-endosulfan was detected above its analytical quantification level in 1 of 7 samples and in 1 of 5 sources.

Alpha-BHC was detected above its analytical quantification level in 1 of 7 samples and in 1 of 5 sources.

Beta-BHC was detected above its analytical quantification level in 1 of 7 samples and in 1 of 5 sources.

Nickel was detected above its analytical quantification level in 6 of 9 samples; however, it was only found above the level considered achievable by specific treatment methods (0.22 mg/l) in 1 of 9 samples and in 1 of 5 sources.

Pollutants Selected for Consideration in Establishing Regulations for the Forging Core Waste Streams. The toxic pollutants listed below are those not eliminated from consideration for any of the reasons listed above; therefore, each was selected for consideration in establishing regulations for these wastewater streams. The pollutants are individually discussed following the list.

1. acenaphthene
38. ethylbenzene
39. fluoranthene
55. naphthalene
62. N-nitrosodiphenylamine
65. phenol
66. bis(2-ethylhexyl) phthalate
68. di-n-butyl phthalate
70. diethyl phthalate
80. fluorene
84. pyrene
86. toluene
97. endosulfan sulfate
98. endrin
99. endrin aldehyde
106. PCB-1242 (a)
107. PCB-1254 (a)
108. PCB-1221 (a)
109. PCB-1232 (b)
110. PCB-1248 (b)
111. PCB-1260 (b)
112. PCB-1016 (b)
119. chromium
120. copper
121. cyanide
122. lead
128. zinc

(a), (b) Reported together

Acenaphthene was detected above its analytical quantification level and above the level considered achievable by specific treatment methods (0.010 mg/l) in 2 of 9 samples and in 2 of 6 sources.

Ethylbenzene was detected above its analytical quantification level in 5 of 8 samples and above the level considered achievable by specific treatment methods (0.050 mg/l) in 2 of 8 samples and in 2 of 4 sources.

Fluoranthene was detected above its analytical quantification level and above the level considered achievable by specific treatment methods (0.010 mg/l) in 3 of 9 samples and in 2 of 6 sources.

Naphthalene was detected above its analytical quantification level and above the level considered achievable by specific treatment methods (0.050 mg/l) in 2 of 9 samples and in 2 of 6 sources.

N-nitrosodiphenylamine was detected above its analytical quantification level in 3 of 9 samples and in 2 of 6 sources.

Phenol was detected above its analytical quantification level and above the level considered achievable by specific treatment methods (0.050 mg/l) in 3 of 10 samples and in 3 of 6 sources.

Bis(2-ethylhexyl) phthalate was found above its analytical quantification level in 5 of 9 samples. The maximum concentration observed was 2.900 mg/l.

Di-n-butyl phthalate was found above its analytical quantification level in 4 of 9 samples, ranging from 0.330 to 19.000 mg/l.

Diethyl phthalate was found above its analytical quantification level in 4 of 9 samples. Values ranged from 0.220 to 3.100 mg/l.

Fluorene was detected above its analytical quantification level and above the level considered achievable by specific treatment methods (0.010 mg/l) in 5 of 9 samples and in 4 of 6 sources.

Pyrene was detected above its analytical quantification level and above the level considered achievable by specific treatment methods (0.010 mg/l) in 4 of 9 samples and in 3 of 6 sources.

Toluene was detected above its analytical quantification level in 5 of 8 samples and above the level considered achievable by specific treatment methods (0.050 mg/l) in 3 of 8 samples and in 2 of 4 sources.

Endosulfan sulfate was detected above its analytical quantification level in 2 of 7 samples and in 2 of 5 sources.

Endrin was detected above its analytical quantification level in 2 of 7 samples and in 2 of 5 sources.

Endrin aldehyde was detected above its analytical quantification level in 2 of 7 samples and in 2 of 5 sources.

The seven organic toxic pollutant PCB's (polychlorinated biphenyls) are not cleanly separated by the analytical protocol employed in this study; thus, they are reported in two groups. Each of the two PCB groups was reported present above its analytical quantification level in 3 of 7 samples and in 3 of 5 sources at one plant.

Chromium was detected above its analytical quantification level in 8 of 9 samples and above the level considered achievable by specific treatment methods (0.007 mg/l) in 3 of 9 samples and in 3 of 5 sources.

Copper was detected above its analytical quantification level in 8 of 9 samples and above the level considered achievable by specific treatment methods (0.39 mg/l) in 5 of 9 samples and in 4 of 5 sources.

Cyanide was detected above its analytical quantification level in 8 of 10 samples and above the level considered achievable by specific treatment methods (0.047 mg/l) in 6 of 10 samples and in 3 of 6 sources.

Lead was detected above its analytical quantification level in 8 of 9 samples and above the level considered achievable by specific treatment methods (0.08 mg/l) in 6 of 9 samples and in 4 of 5 sources.

Zinc was detected above its analytical quantification level in 8 of 9 samples and above the level considered achievable by specific treatment methods (0.23 mg/l) in 6 of 9 samples and in 4 of 5 sources.

Drawing with Neat Oils Core Waste Streams

The following waste streams will receive a pollutant discharge allocation in the core of the Drawing with Neat Oils Subcategory:

Sawing Spent Lubricants
Miscellaneous Nondescript Wastewater Sources

No specific pollutant data were considered for the miscellaneous nondescript wastewater sources. As discussed previously, the Agency did not sample the sawing spent emulsion. The characteristics of this waste are determined to be the same as the rolling spent emulsion, therefore, the characteristics of rolling spent emulsions are transferable to the sawing spent emulsion.

Pollutants Never Detected. The toxic pollutants listed below were not detected in any samples from these wastewater streams; therefore, they were not selected for consideration in establishing regulations for these wastewater streams.

3. acrylonitrile
5. benzidine
6. carbon tetrachloride
8. 1,2,4-trichlorobenzene
9. hexachlorobenzene

10. 1,2-dichloroethane
12. hexachloroethane
13. 1,1-dichloroethane
14. 1,1,2-trichloroethane
16. chloroethane
17. DELETED
18. bis(2-chloroethyl) ether
19. 2-chloroethyl vinyl ether
20. 2-chloronaphthalene
22. p-chloro-m-cresol
24. 2-chlorophenol
25. 1,2-dichlorobenzene
26. 1,3-dichlorobenzene
27. 1,4-dichlorobenzene
28. 3,3'-dichlorobenzidine
29. 1,1-dichloroethylene
31. 2,4-dichlorophenol
32. 1,2-dichloropropane
33. 1,3-dichloropropylene
34. 2,4-dimethylphenol
35. 2,4-dinitrotoluene
36. 2,6-dinitrotoluene
37. 1,2-diphenylhydrazine
40. 4-chlorophenyl phenyl ether
41. 4-bromophenyl phenyl ether
42. bis(2-chloroisopropyl) ether
43. bis(2-chloroethoxy) methane
45. methyl chloride
46. methyl bromide
47. bromoform
48. dichlorobromomethane
49. DELETED
50. DELETED
51. chlorodibromomethane
52. hexachlorobutadiene
53. hexachlorocyclopentadiene
54. isophorone
56. nitrobenzene
57. 2-nitrophenol
58. 4-nitrophenol
59. 2,4-dinitrophenol
60. 4,6-dinitro-o-cresol
61. N-nitrosodimethylamine
63. N-nitrosodi-n-propylamine
69. di-n-octyl phthalate
73. benzo(a)pyrene
74. benzo(b)fluoranthene
75. benzo(k)fluoranthene
79. benzo(ghi)perylene
82. dibenzo(a,h)anthracene

83. indeno(1,2,3-c,d)pyrene
88. vinyl chloride
89. aldrin
90. dieldrin
94. 4,4'-DDD
100. heptachlor
101. heptachlor epoxide
104. gamma-BHC
105. delta-BHC
113. toxaphene
116. asbestos
129. 2,3,7,8-tetrachlorodibenzo-p-dioxin

Pollutants Never Found Above Their Analytical Quantification Level. The toxic pollutants listed below were never found above their analytical quantification level in any samples from these wastewater streams; therefore, they were not selected for consideration in establishing regulations for these wastewater streams.

11. 1,1,1-trichloroethane
15. 1,1,2,2-tetrachloroethane
64. pentachlorophenol
72. benzo(a)anthracene
92. 4,4-DDT
114. antimony
117. beryllium
125. selenium
126. silver
127. thallium

Pollutants Detected Below Levels Achievable by Treatment. The toxic pollutants below were found above their analytical quantification level only at a concentration below the concentration considered achievable by specific available treatment methods; therefore, they were not selected for consideration in establishing regulations for these wastewater streams. The pollutants are individually discussed following the list.

2. acrolein
4. benzene
7. chlorobenzene
21. 2,4,6-trichlorophenol
23. chloroform
44. methylene chloride
115. arsenic
118. cadmium
123. mercury

Acrolein was detected above its analytical quantification level in 2 of 8 samples; however, it was not found above the level considered achievable by specific treatment methods (0.100 mg/l).

Benzene was detected above its analytical quantification level in 1 of 6 samples; however, it was not found above the level considered achievable by specific treatment methods (0.05 mg/l).

Chlorobenzene was detected above its analytical quantification level in 1 of 8 samples; however, it was not found above the level considered achievable by specific treatment methods (0.025 mg/l).

2,4,6-Trichlorophenol was detected above its analytical quantification level in 1 of 9 samples; however, it was not found above the level considered achievable by specific treatment methods (0.025 mg/l).

Chloroform was detected above its analytical quantification level in 2 of 8 samples; however, it was not found above the level considered achievable by specific treatment methods (0.1 mg/l).

Methylene chloride was found above its analytical quantification level in 5 of 8 samples, with values ranging from 0.360 to 1.300 mg/l. This pollutant is not attributable to specific materials or processes associated with drawing with neat oils; however, it is a common solvent used in analytical laboratories, and is not expected to be present in raw wastewaters at concentrations above the level considered achievable by specific available treatment methods (0.100 mg/l).

Arsenic was detected above its analytical quantification level in 4 of 9 samples; however, it was not found above the level considered achievable by specific treatment methods (0.34 mg/l).

Cadmium was detected above its analytical quantification level in 5 of 9 samples; however, it was only found above the level considered achievable by specific treatment methods (0.049 mg/l) in 2 of 9 samples and in 2 of 5 sources. Both of these sources were at a single plant.

Mercury was detected above its analytical quantification level in 3 of 9 samples; however, it was not found above the level considered achievable by specific treatment methods (0.036 mg/l).

Pollutants Detected in a Small Number of Sources. The toxic pollutants listed below were found above their analytical quantification level at only a small number of sources within the category and are uniquely related to only those sources; therefore, they were not selected for consideration in establishing regulations for these wastewater streams. The pollutants are individually discussed following the list.

30. 1,2-trans-dichloroethylene
67. butyl benzyl phthalate
71. dimethyl phthalate
76. chrysene
77. acenaphthylene
78. anthracene (a)
81. phenanthrene (a)
85. tetrachloroethylene
86. trichloroethylene
91. chlordane
93. 4,4'-DDE
95. alpha-endosulfan
96. beta-endosulfan
102. alpha-BHC
103. beta-BHC
124. nickel

(a) Reported together

1,2-trans-Dichloroethylene was detected above its analytical quantification level in 1 of 8 samples and in 1 of 4 sources.

Butyl benzyl phthalate was detected above its analytical quantification level in 1 of 9 samples and in 1 of 6 sources.

Dimethyl phthalate was detected above its analytical quantification level in 1 of 9 samples and in 1 of 6 sources.

Chrysene was detected above its analytical quantification level in 1 of 9 samples and in 1 of 6 sources.

Acenaphthylene was detected above its analytical quantification level in 1 of 9 samples and in 1 of 6 sources.

Anthracene and phenanthrene are not cleanly separated by the analytical protocol employed in this study; thus, they are reported together. The sum of these pollutants was reported at values greater than their analytical quantification level in 2 of 9 samples and in 1 of 6 sources.

Tetrachloroethylene was detected above its analytical quantification level in 5 of 8 samples; however, it was only found above the level considered achievable by specific treatment methods (0.05 mg/l) in 3 of 8 samples and in 1 of 4 sources.

Trichloroethylene was detected above its analytical quantification level in 1 of 8 samples and in 1 of 4 sources.

Chlordane was detected above its analytical quantification level in 1 of 7 samples and in 1 of 5 sources.

4,4'-DDE was detected above its analytical quantification level in 1 of 7 samples and in 1 of 5 sources.

Alpha-endosulfan was detected above its analytical quantification level in 1 of 7 samples and in 1 of 5 sources.

Beta-endosulfan was detected above its analytical quantification level in 1 of 7 samples and in 1 of 5 sources.

Alpha-BHC was detected above its analytical quantification level in 1 of 7 samples and in 1 of 5 sources.

Beta-BHC was detected above its analytical quantification level in 1 of 7 samples and in 1 of 5 sources.

Nickel was detected above its analytical quantification level in 6 of 9 samples; however, it was only found above the level considered achievable by specific treatment methods (0.22 mg/l) in 1 of 9 samples and in 1 of 5 sources.

Pollutants Selected for Consideration in Establishing Regulations for the Drawing with Neat Oils Core Waste Streams. The toxic pollutants listed below are those not eliminated from consideration for any of the reasons listed above; therefore, each was selected for consideration in establishing regulations for these wastewater streams. The pollutants are individually discussed following the list.

1. acenaphthene
38. ethylbenzene
39. fluoranthene
55. naphthalene
62. N-nitrosodiphenylamine
65. phenol
66. bis(2-ethylhexyl) phthalate
68. di-n-butyl phthalate
70. diethyl phthalate
80. fluorene
84. pyrene
86. toluene
97. endosulfan sulfate
98. endrin
99. endrin aldehyde
106. PCB-1242 (a)
107. PCB-1254 (a)
108. PCB-1221 (a)
109. PCB-1232 (b)
110. PCB-1248 (b)
111. PCB-1260 (b)
112. PCB-1016 (b)

119. chromium
120. copper
121. cyanide
122. lead
128. zinc

(a), (b) Reported together

Acenaphthene was detected above its analytical quantification level and above the level considered achievable by specific treatment methods (0.010 mg/l) in 2 of 9 samples and in 2 of 6 sources.

Ethylbenzene was detected above its analytical quantification level in 5 of 8 samples and above the level considered achievable by specific treatment methods (0.050 mg/l) in 2 of 8 samples and in 2 of 4 sources.

Fluoranthene was detected above its analytical quantification level and above the level considered achievable by specific treatment methods (0.010 mg/l) in 3 of 9 samples and in 2 of 6 sources.

Naphthalene was detected above its analytical quantification level and above the level considered achievable by specific treatment methods (0.050 mg/l) in 2 of 9 samples and in 2 of 6 sources.

N-nitrosodiphenylamine was detected above its analytical quantification level in 3 of 9 samples and in 2 of 6 sources.

Phenol was detected above its analytical quantification level and above the level considered achievable by specific treatment methods (0.050 mg/l) in 3 of 10 samples and in 3 of 6 sources.

Bis(2-ethylhexyl) phthalate was found above its analytical quantification level in 5 of 9 samples. The maximum concentration observed was 2.900 mg/l.

Di-n-butyl phthalate was found above its analytical quantification level in 4 of 9 samples, ranging from 0.330 to 19.000 mg/l.

Diethyl phthalate was found above its analytical quantification level in 4 of 9 samples. Values ranged from 0.220 to 3.100 mg/l.

Fluorene was detected above its analytical quantification level and above the level considered achievable by specific treatment methods (0.010 mg/l) in 5 of 9 samples and in 4 of 6 sources.

Pyrene was detected above its analytical quantification level and above the level considered achievable by specific treatment methods (0.010 mg/l) in 4 of 9 samples and in 3 of 6 sources.

Toluene was detected above its analytical quantification level in 5 of 8 samples and above the level considered achievable by specific treatment methods (0.050 mg/l) in 3 of 8 samples and in 2 of 4 sources.

Endosulfan sulfate was detected above its analytical quantification level in 2 of 7 samples and in 2 of 5 sources.

Endrin was detected above its analytical quantification level in 2 of 7 samples and in 2 of 5 sources.

Endrin aldehyde was detected above its analytical quantification level in 2 of 7 samples and in 2 of 5 sources.

The seven organic toxic pollutant PCB's (polychlorinated biphenyls) are not cleanly separated by the analytical protocol employed in this study; thus, they are reported in two groups. Each of the two PCB groups was reported present above its analytical quantification level in 3 of 7 samples and in 3 of 5 sources at one plant.

Chromium was detected above its analytical quantification level in 8 of 9 samples and above the level considered achievable by specific treatment methods (0.007 mg/l) in 3 of 9 samples and in 3 of 5 sources.

Copper was detected above its analytical quantification level in 8 of 9 samples and above the level considered achievable by specific treatment methods (0.39 mg/l) in 5 of 9 samples and in 4 of 5 sources.

Cyanide was detected above its analytical quantification level in 8 of 10 samples and above the level considered achievable by specific treatment methods (0.047 mg/l) in 6 of 10 samples and in 3 of 6 sources.

Lead was detected above its analytical quantification level in 8 of 9 samples and above the level considered achievable by specific treatment methods (0.08 mg/l) in 6 of 9 samples and in 4 of 5 sources.

Zinc was detected above its analytical quantification level in 8 of 9 samples and above the level considered achievable by specific treatment methods (0.23 mg/l) in 6 of 9 samples and in 4 of 5 sources.

Drawing With Emulsions or Soaps Core Waste Streams

The following waste streams will receive a pollutant discharge allocation in the core of the Drawing With Emulsions or Soaps Subcateogry:

Drawing With Emulsions or Soaps Spent Lubricants
Sawing Spent Lubricants
Miscellaneous Non-Descript Wastewater Sources

No specific pollutant data were considered for the miscellaneous non-descript wastewater sources. Drawing with emulsions or soaps spent lubricants were only sampled at one facility; however, the volatile organics and toxic metals were not analyzed in that sample. As discussed previously, the Agency did not sample the sawing spent emulsion. The characteristics of this waste are determined to be the same as the rolling spent emulsion, therefore, the characteristics of rolling spent emulsions are transferable to the sawing spent emulsion. Due to a lack of data for volatile organics and toxic metals in the drawing with emulsions or soaps spent lubricants, the data used in the selection process was for the rolling with emulsions spent emulsions and drawing with emulsions or soaps spent lubricants wastewater streams combined together.

Pollutants Never Detected. The toxic pollutants listed below were not detected in any samples from these wastewater streams; therefore, they were not selected for consideration in establishing regulations for these wastewater streams.

3. acrylonitrile
5. benzidine
6. carbon tetrachloride
8. 1,2,4-trichlorobenzene
9. hexachlorobenzene
10. 1,2-dichloroethane
12. hexachloroethane
13. 1,1-dichloroethane
14. 1,1,2-trichloroethane
16. chloroethane
17. DELETED
18. bis(2-chloroethyl) ether
19. 2-chloroethyl vinyl ether
20. 2-chloronaphthalene
25. 1,2-dichlorobenzene
26. 1,3-dichlorobenzene
27. 1,4-dichlorobenzene
28. 3,3'-dichlorobenzidine
29. 1,1-dichloroethylene
31. 2,4-dichlorophenol
32. 1,2-dichloropropane
33. 1,3-dichloropropylene
34. 2,4-dimethylphenol

36. 2,6-dinitrotoluene
40. 4-chlorophenyl phenyl ether
41. 4-bromophenyl phenyl ether
42. bis(2-chloroisopropyl) ether
43. bis(2-chloroethoxy) methane
45. methyl chloride
46. methyl bromide
47. bromoform
48. dichlorobromomethane
49. DELETED
50. DELETED
51. chlorodibromomethane
52. hexachlorobutadiene
53. hexachlorocyclopentadiene
56. nitrobenzene
57. 2-nitrophenol
58. 4-nitrophenol
59. 2,4-dinitrophenol
60. 4,6-dinitro-o-cresol
61. N-nitrosodimethylamine
63. N-nitrosodi-n-propylamine
73. benzo(a)pyrene
74. benzo(b)fluoranthene
75. benzo(k)fluoranthene
79. benzo(ghi)perylene
82. dibenzo(a,h)anthracene
83. indeno(1,2,3-c,d)pyrene
88. vinyl chloride
89. aldrin
90. dieldrin
94. 4,4'-DDD
100. heptachlor
101. heptachlor epoxide
104. gamma-BHC
105. delta-BHC
113. toxaphene
116. asbestos
129. 2,3,7,8-tetrachlorodibenenzo-p-dioxin

Pollutants Never Found Above Their Analytical Quantification Level. The toxic pollutants listed below were never found above their analytical quantification level in any samples from these wastewater streams; therefore, they were not selected for consideration in establishing regulations for these wastewater streams.

11. 1,1,1-trichloroethane
15. 1,1,2,2-tetrachloroethane
64. pentachlorophenol
72. benzo(a)anthracene
92. 4,4-DDT
114. antimony

117. beryllium
125. selenium
126. silver
127. thallium

Pollutants Detected Below Levels Achievable by Treatment. The toxic pollutants below were found above their analytical quantification level only at a concentration below the concentratio considered achievable by specific available treatment methods; therefore, they were not selected for consideration in establishing regulations for these wastewater streams. The pollutants are individually discussed following the list.

2. acrolein
4. benzene
7. chlorobenzene
21. 2,4,6-trichlorophenol
23. chloroform
44. methylene chloride
115. arsenic
118. cadmium
123. mercury

Acrolein was detected above its analytical quantification level in 2 of 8 samples; however, it was not found above the level considered achievable by specific treatment methods (0.100 mg/l).

Benzene was detected above its analytical quantification level in 1 of 6 samples; however, it was not found above the level considered achievable by specific treatment methods (0.005 mg/l).

Chlorobenzene was detected above its analytical quantification level in 1 of 8 samples; however, it was not found above the level considered achievable by specific treatment methods (0.025 mg/l).

2,4,6-Trichlorophenol was detected above its analytical quantification level in 1 of 10 samples; however, it was not found above the level considered achievable by specific treatment methods (0.025 mg/l).

Chloroform was detected above its analytical quantification level in 2 of 8 samples; however, it was not found above the level considered achievable by specific treatment methods (0.1 mg/l).

Methylene chloride was found above its analytical quantification level in 5 of 8 samples, with values ranging from 0.360 to 1.300 mg/l. This pollutant is not attributable to specific materials or processes associated with continuous casting; however, it is a

common solvent used in analytical laboratories, and is not expected to be present in raw wastewaters at concentrations above the level considered achievable by specific available treatment methods (0.100 mg/l).

Arsenic was detected above its analytical quantification level in 4 of 9 samples; however, it was not found above the level considered achievable by specific treatment methods (0.34 mg/l).

Cadmium was detected above its analytical quantification level in 5 of 9 samples; however, it was only found above the level considered achievable by specific treatment methods (0.049 mg/l) in 2 of 9 samples and in 2 of 5 sources. Both of these sources were at a single plant.

Mercury was detected above its analytical quantification level in 3 of 9 samples; however, it was not found above the level considered achievable by specific treatment methods (0.036 mg/l).

Pollutants Detected in a Small Number of Sources. The toxic pollutants listed below were found above their analytical quantification level at only a small number of sources within the category and are uniquely related to only those sources; therefore, they were not selected for consideration in establishing regulations for these wastewater streams. The pollutants are individually discussed following the list.

22. p-chloro-m-cresol
24. 2-chlorophenol
30. 1,2-trans-dichloroethylene
35. 2,4-dinitrotoluene
37. 1,2-diphenyl hydrazine
54. isophorone
69. di-n-octyl phthalate
67. butyl benzyl phthalate
71. dimethyl phthalate
76. chrysene
77. acenaphthylene
78. anthracene (a)
81. phenanthrene (a)
85. tetrachloroethylene
87. trichloroethylene
91. chlordane
93. 4,4'-DDE
95. alpha-endosulfan
96. beta-endosulfan
102. alpha-BHC
103. beta-BHC
124. nickel

(a) Reported together

p-Chloro-m-cresol was detected above its analytical quantification level in 1 of 10 samples and in 1 of 7 sources.

2-Chlorophenol was detected above its analytical quantification level in 1 of 10 samples and in 1 of 7 sources.

1,2-trans-Dichloroethylene was detected above its analytical quantification level in 1 of 8 samples and in 1 of 4 sources.

2,4-Dinitrotoluene was detected above its analytical quantification level in 1 of 10 samples and in 1 of 7 sources.

1,2-Diphenylhydrazine was detected above its analytical quantification level in 1 of 10 samples and in 1 of 7 sources.

Isosphorone was detected above its analytical quantification level in 1 of 10 samples and in 1 of 7 sources.

Butyl benzyl phthalate was detected above its analytical quantification level in 1 of 10 samples and in 1 of 7 sources.

Di-n-octyl phthalate was detected above its analytical quantification level in 1 of 10 samples and in 1 of 7 sources.

Dimethyl phthalate was detected above its analytical quantification level in 1 of 10 samples and in 1 of 7 sources.

Chrysene was detected above its analytical quantification level in 1 of 10 samples and in 1 of 7 sources.

Acenaphthylene was detected above its analytical quantification level in 1 of 10 samples and in 1 of 7 sources.

Anthracene and phenanthrene are not cleanly separated by the analytical protocol employed in this study; thus, they are reported together. The sum of these pollutants was reported at values greater than their analytical quantification level in 2 of 10 samples and in 1 of 7 sources.

Tetrachloroethylene was detected above its analytical quantification level in 5 of 8 samples; however, it was only found above the level considered achievable by specific treatment methods (0.05 mg/l) in 3 of 8 samples and in 1 of 4 sources.

Trichloroethylene was detected above its analytical quantification level in 1 of 8 samples and in 1 of 4 sources.

Chlordane was detected above its analytical quantification level in 1 of 8 samples and in 1 of 6 sources.

4,4'-DDE was detected above its analytical quantification level in 1 of 8 samples and in 1 of 6 sources.

Alpha-endosulfan was detected above its analytical quantification level in 1 of 8 samples and in 1 of 6 sources.

Beta-endosulfan was detected above its analytical quantification level in 1 of 8 samples and in 1 of 6 sources.

Alpha-BHC was detected above its analytical quantification level in 1 of 8 samples and in 1 of 6 sources.

Beta-BHC was detected above its analytical quantification level in 1 of 8 samples and in 1 of 6 sources.

Nickel was detected above its analytical quantification level in 6 of 9 samples; however, it was only found above the level considered achievable by specific treatment methods (0.22 mg/l) in 1 of 9 samples and in 1 of 5 sources.

Pollutants Selected for Consideration in Establishing Regulations for the Drawing With Emulsions or Soaps Core Waste Streams. The toxic pollutants listed below are those not eliminated from consideration for any of the reasons listed above; therefore, each was selected for consideration in establishing regulations for these wastewater streams. The pollutants are individually discussed following the list.

1. acenaphthene
38. ethylbenzene
39. fluoranthene
55. naphthalene
62. N-nitrosodiphenylamine
65. phenol
66. bis(2-ethylhexyl) phthalate
68. di-n-butyl phthalate
70. diethyl phthalate
80. fluorene
84. pyrene
86. toluene
97. endosulfan sulfate
98. endrin
99. endrin aldehyde
106. PCB-1242 (a)
107. PCB-1254 (a)
108. PCB-1221 (a)
109. PCB-1232 (b)
110. PCB-1248 (b)
111. PCB-1260 (b)
112. PCB-1016 (b)

119. chromium
120. copper
121. cyanide
122. lead
128. zinc

(a), (b) Reported together

Acenaphthene was detected above its analytical quantification level and above the level considered achievable by specific treatment methods (0.010 mg/l) in 2 of 10 samples and in 2 of 7 sources.

Ethylbenzene was detected above its analytical quantification level in 5 of 8 samples and above the level considered achievable by specific treatment methods (0.050 mg/l) in 2 of 8 samples and in 2 of 4 sources.

Fluoranthene was detected above its analytical quantification level and above the level considered achievable by specific treatment methods (0.010 mg/l) in 3 of 10 samples and in 2 of 7 sources.

Naphthalene was detected above its analytical quantification level and above the level considered achievable by specific treatment methods (0.050 mg/l) in 2 of 10 samples and in 2 of 7 sources.

N-nitrosodiphenylamine was detected above its analytical quantification level in 3 of 10 samples and in 2 of 7 sources.

Phenol was detected above its analytical quantification level and above the level considered achievable by specific treatment methods (0.050 mg/l) in 3 of 11 samples and in 3 of 7 sources.

Bis(2-ethylhexyl) phthalate was found above its analytical quantification level in 6 of 10 samples. The maximum concentration observed was 2.900 mg/l.

Di-n-butyl phthalate was found above its analytical quantification level in 5 of 10 samples, ranging from 0.034 to 19.000 mg/l.

Diethyl phthalate was found above its analytical quantification level in 4 of 10 samples. Values ranged from 0.220 to 3.100 mg/l.

Fluorene was detected above its analytical quantification level and above the level considered achievable by specific treatment methods (0.010 mg/l) in 5 of 10 samples and in 4 of 7 sources.

Pyrene was detected above its analytical quantification level and above the level considered achievable by specific treatment methods (0.010 mg/l) in 4 of 10 samples and in 3 of 7 sources.

Toluene was detected above its analytical quantification level in 5 of 8 samples and above the level considered achievable by specific treatment methods (0.050 mg/l) in 3 of 8 samples and in 2 of 4 sources.

Endosulfan sulfate was detected above its analytical quantification level in 2 of 8 samples and in 2 of 6 sources.

Endrin was detected above its analytical quantification level in 2 of 8 samples and in 2 of 6 sources.

Endrin aldehyde was detected above its analytical quantification level in 2 of 8 samples and in 2 of 6 sources.

The seven organic toxic pollutant PCB's (polychlorinated biphenyls) are not cleanly separated by the analytical protocol employed in this study; thus, they are reported in two groups. Each of the two PCB groups was reported present above its analytical quantification level in 3 of 8 samples and in 3 of 6 sources at one plant.

Chromium was detected above its analytical quantification level in 8 of 9 samples and above the level considered achievable by specific treatment methods (0.007 mg/l) in 3 of 9 samples and in 3 of 5 sources.

Copper was detected above its analytical quantification level in 8 of 9 samples and above the level considered achievable by specific treatment methods (0.39 mg/l) in 5 of 9 samples and in 4 of 5 sources.

Cyanide was detected above its analytical quantification level in 8 of 10 samples and above the level considered achievable by specific treatment methods (0.047 mg/l) in 6 of 10 samples and in 3 of 6 sources.

Lead was detected above its analytical quantification level in 8 of 9 samples and above the level considered achievable by specific treatment methods (0.08 mg/l) in 6 of 9 samples and in 4 of 5 sources.

Zinc was detected above its analytical quantification level in 8 of 9 samples and above the level considered achievable by specific treatment methods (0.23 mg/l) in 6 of 9 samples and in 4 of 5 sources.

POLLUTANT SELECTION FOR ANCILLARY WASTE STREAMS

The pollutant selection procedure was performed for the following ancillary operations to select those toxic pollutants that would be considered for establishing regulations for these wastewater streams:

Direct Chill Casting Contact Cooling Water
Continuous Rod Casting Contact Cooling Water
Continuous Sheet Casting Spent Lubricants
Continuous Rod Casting Spent Lubricants
Forging Scrubber Liquor
Solution and Press Heat Treatment Contact Cooling Water
Cleaning or Etching Bath
Cleaning or Etching Rinse
Cleaning or Etching Scrubber Liquor
Degassing Scrubber Liquor

Direct Chill Casting Contact Cooling Water

Continuous Rod Casting Contact Cooling Water

The Agency did not sample the continuous rod casting contact cooling water waste stream. The characteristics of this waste stream are determined to be the same as the direct chill casting contact cooling water. Both casting processes use water to cool the aluminum as it is cast, and since the alumium that water contacts is essentially the same in both processes, the characteristics of one are transferable to the other.

Pollutants Never Detected. The toxic pollutants listed below were not detected in any samples from these wastewater streams; therefore, they were not selected for consideration in establishing regulations for these wastewater streams.

2. acrolein
3. acrylonitrile
5. benzidine
8. 1,2,4-trichlorobenzene
9. hexachlorobenzene
10. 1,2-dichloroethane
12. hexachloroethane
13. 1,1-dichloroethane
16. chloroethane
17. DELETED
18. bis(2-chloroethyl) ether
19. 2-chloroethyl vinyl ether
20. 2-chloronaphthalene
25. 1,2-dichlorobenzene
26. 1,3-dichlorobenzene

27. 1,4-dichlorobenzene
28. 3,3'-dichlorobenzidine
29. 1,1-dichloroethylene
30. 1,2-trans-dichloroethylene
32. 1,2-dichloropropane
33. 1,3-dichloropropylene
35. 2,4-dinitrotoluene
36. 2,6-dinitrotoluene
37. 1,2-diphenylhydrazine
38. ethylbenzene
40. 4-chlorophenyl phenyl ether
41. 4-bromophenyl phenyl ether
42. bis(2-chloroisopropyl) ether
43. bis(2-chloroethyoxy) methane
45. methyl chloride
46. methyl bromide
47. bromoform
49. DELETED
50. DELETED
52. hexachlorobutadiene
53. hexachlorocyclopentadiene
56. nitrobenzene
58. 4-nitrophenol
61. N-nitrosodimethylamine
63. N-nitrosodi-n-propylamine
73. benzo(a)pyrene
74. benzo(b)fluoranthene
75. benzo(k)fluoranthene
79. benzo(ghi)perylene
82. dibenzo(a,h)anthracene
83. indeno(1,2,3-c,d)pyrene
88. vinyl chloride
98. endrin
113. toxaphene
116. asbestos
129. 2,3,7,8-tetrachlorodibenzo-p-dioxin

Pollutants Never Found Above Their Analytical Quantification Level. The toxic pollutants listed below were never found above their analytical quantification level in any samples from these wastewater streams; therefore, they were not selected for consideration in establishing regulations for these wastewater streams.

6. carbon tetrachloride
7. chlorobenzene
11. 1,1,1-trichloroethane
14. 1,1,2-trichloroethane
15. 1,1,2,2-tetrachloroethane
21. 2,4,6-trichlorophenol
22. p-chloro-m-cresol

31. 2,4-dichlorophenol
34. 2,4-dimethylphenol
39. fluoranthene
48. dichlorobromomethane
51. chlorodibromomethane
55. naphthalene
57. 2-nitrophenol
64. pentachlorophenol
72. benzo(a)anthracene
76. chrysene
84. pyrene
85. tetrachloroethylene
86. toluene
87. trichloroethylene
89. aldrin
90. dieldrin
92. 4,4'-DDT
93. 4,4'-DDE
94. 4,4'-DDD
95. alpha-endosulfan
96. beta-endosulfan
97. endosulfan sulfate
99. endrin aldehyde
100. heptachlor
101. heptachlor epoxide
102. alpha-BHC
103. beta-BHC
104. gamma-BHC
105. delta-BHC
114. antimony
115. arsenic
117. beryllium
121. cyanide
125. selenium
126. silver
127. thallium

Pollutants Detected Below Levels Achievable by Treatment. The toxic pollutants listed below were found above their analytical quantification level only at a concentration below the concentration considered achievable by specific available treatment methods; therefore, they were not selected for consideration in establishing regulations for these wastewater streams. The pollutants are individually discussed following the list.

4. benzene
24. 2-chlorophenol
44. methylene chloride
65. phenol
66. bis(2-ethylhexyl) phthalate

Pollutants Detected in a Small Number of Sources. The toxic pollutants listed below were found above their analytical quantification level at only a small number of sources within the category and are uniquely related to only those sources; therefore, they were not selected for consideration in establishing regulations for these wastewater streams. The pollutants are individually discussed following the list.

1.	acenaphthene	
23.	chloroform	
54.	isophorone	
59.	2,4-dinitrophenol	
60.	4,6-dinitro-o-cresol	
62.	N-nitrosodiphenylamine	
71.	dimethyl phthalate	
77.	acenaphthylene	
78.	anthracene	(a)
80.	fluorene	
81.	phenanthrene	(a)
91.	chlordane	
106.	PCB-1242	(b)
107.	PCB-1254	(b)
108.	PCB-1221	(b)
109.	PCB-1232	(c)
110.	PCB-1248	(c)
111.	PCB-1260	(c)
112.	PCB-1016	(c)
119.	chromium	

(a),(b)(c) Reported together

Acenaphthene was reported present above its analytical quantification level in 2 of 20 samples and in 2 of 12 sources. Both sources containing measurable amounts of acenaphthene were at the sample plant.

Chloroform was found above its analytical quantification level in 11 of 23 samples, with values ranging from 0.012 to 0.15 mg/l. Only one of the reported values is above the level considered achievable by specific available treatment of 0.1 mg/l.

Isophorone was reported above its analytical quantification level in 2 of 20 samples and in 1 of 12 sources.

2,4-Dinitrophenol was reported at a concentration above its analytical quantification level in only 1 of 20 sampels and in 1 of 12 sources. The observed concentration was 0.042 mg/l. The level considered achievable by specific available treatment methods is 0.025 mg/l.

4,6-Dinitro-o-cresol was reported at a concentration above its analytical quantification level in only 1 of 20 samples and 1 of 12 sources. The observed concentration was 0.053 mg/1. The level considered achievable by specific available treatment methods is 0.025 mg/1.

N-nitrosodiphenylamine was reported at concentrations above its analytical quantification level in only 2 of 20 samples and in 1 of 12 sources. The values observed were 0.044 and 0.057 mg/1.

Dimethyl phthalate was reported at a concentration greater than its analytical quantification level in only 1 of 20 samples and in 1 of 12 sources. The observed concentration was 0.053 mg/1.

Acenaphthylene was reported at a concentration greater than its analytical quantification level in 1 of 20 samples and in 1 of 12 sources. The observed concentration was 0.012 mg/1.

Anthracene and phenanthrene are not cleanly separated by the analytical protocol employed in this study; thus, they are reported together. The sum of these pollutants was reported at values greater than their analytical quantification level in just 2 of 20 samples and in 1 of 12 sources.

Fluorene was reported present above its analytical quantification level in 2 of 20 samples and in 1 of 12 sources.

Chlordane was reported present above its analtyical quantification level in 2 of 16 samples and in 2 of 12 sources. Both reported concentrations of chlordane came from sources at one plant, and were above the level considered achievable by specific available treatment methods.

The seven organic toxic pollutant PCB's (polychlorinated biphenyls) are not cleanly separated by the analytical protocol employed in this study; thus they are reported in two groups. Each of the two PCB groups was reported present above its analytical quantificaiton level in 2 of 16 samples and in 2 of 12 sources. The reported values all were for sources at one plant.

Chromium was reported present above its analytical concentration level in 6 of 20 samples an in 4 of 12 sources. Only one sample contained chromium at a level greater than that considered achievable by specific available treatment methods (0.07 mg/1).

Pollutants Selected for Consideration in Establishing Regulations for the Direct Chill Casting and Continuous Rod Casting Contact Cooling Water Waste Streams. The toxic pollutants listed below are those not eliminated from consideration for any of the reasons listed above; therefore, each was selected for consideration in establishing regulations for these wastewater streams. The pollutants are individually discussed following the list.

122. lead
128. zinc

Lead was found above its analytical quantification level in 15 of 20 samples. Values ranged from 0.021 to 0.100 mg/l. Four of the values were above the level considered achievable by specific treatment (0.08 mg/l).

Zinc was found above its analytical quantification level in 14 of 20 samples. Values ranged from 0.1 to 1.0 mg/l. Five of the sample values were above the level considered achievable by specific treatment of 0.23 mg/l.

Continuous Sheet Casting Spent Lubricants

Continuous Rod Casting Spent Lubricants

The Agency did not sample the continuous rod casting or continuous sheet casting spent lubricant. The characteristics of these wastes are determined to be the same as the rolling spent emulsion. Rolling and continuous casting of rod or sheet, require a lubricant to prevent excess wear on the metal against metal surfaces and to aid by cooling the surfaces. Since the properties of the lubricants required are similar between these processes, the formulations for each ought to be similar, therefore the characteristics of one are transferable to another.

Pollutants Never Detected. The toxic pollutants listed below were not detected in any samples from these wastewater streams; therefore, they were not selected for consideration in establishing regulations for these wastewater streams.

3. acrylonitrile
5. benzidine
6. carbon tetrachloride
8. 1,2,4-trichlorobenzene
9. hexachlorobenzene
10. 1,2-dichloroethane
12. hexachloroethane
13. 1,1-dichloroethane
14. 1,1,2-trichloroethane
16. chloroethane
17. DELETED
18. bis(2-chloroethyl) ether
19. 2-chloroethyl vinyl ether
20. 2-chloronaphthalene
22. p-chloro-m-cresol
24. 2-chlorophenol
25. 1,2-dichlorobenzene
26. 1,3-dichlorobenzene

27. 1,4-dichlorobenzene
28. 3,3'-dichlorobenzidine
29. 1,1-dichloroethylene
31. 2,4-dichlorophenol
32. 1,2-dichloropropane
33. 1,3-dichloropropylene
34. 2,4-dimethylphenol
35. 2,4-dinitrotoluene
36. 2,6-dinitrotoluene
37. 1,2-diphenylhydrazine
40. 4-chlorophenyl phenyl ether
41. 4-bromophenyl phenyl ether
42. bis(2-chloroisopropyl) ether
43. bis(2-chloroethoxy) methane
45. methyl chloride
46. methyl bromide
47. bromoform
48. dichlorobromomethane
49. DELETED
50. DELETED
51. chlorodibromomethane
52. hexachlorobutadiene
53. hexachlorocyclopentadiene
54. isophorone
56. nitrobenzene
57. 2-nitrophenol
58. 4-nitrophenol
59. 2,4-dinitrophenol
60. 4,6-dinitro-o-cresol
61. N-nitrosodimethylamine
63. N-nitrosodi-n-propylamine
69. di-n-octyl phthalate
73. benzo(a)pyrene
74. benzo(b)fluoranthene
75. benzo(k)fluoranthene
79. benzo(ghi)perylene
82. dibenzo(a,h)anthracene
83. indeno(1,2,3-c,d)pyrene
88. vinyl chloride
89. aldrin
90. dieldrin
94. 4,4'-DDD
100. heptachlor
101. heptachlor epoxide
104. gamma-BHC
105. delta-BHC
113. toxaphene
116. asbestos
129. 2,3,7,8-tetrachlorodibenzo-p-dioxin

Pollutants Never Found Above Their Analytical Quantification Level. The toxic pollutants listed below were never found above their analytical quantification level in any samples from these wastewater streams; therefore, they were not selected for consideration in establishing regulations for these wastewater streams.

11. 1,1,1-trichloroethane
15. 1,1,2,2-tetrachloroethane
64. pentachlorophenol
72. benzo(a)anthracene
92. 4,4-DDT
114. antimony
117. beryllium
125. selenium
126. silver
127. thallium

Pollutants Detected Below Levels Achievable by Treatment. The toxic pollutants below were found above their analytical quantification level only at a concentration below the concentration considered achievable by specific available treatment methods; therefore, they were not selected for consideration in establishing regulations for these wastewater streams. The pollutants are individually discussed following the list.

2. acrolein
4. benzene
7. chlorobenzene
21. 2,4,6-trichlorophenol
23. chloroform
44. methylene chloride
115. arsenic
118. cadmium
123. mercury

Acrolein was detected above its analytical quantification level in 2 of 8 samples; however, it was not found above the level considered achievable by specific treatment methods (0.100 mg/l).

Benzene was detected above its analytical quantification level in 1 of 6 samples; however, it was not found above the level considered achievable by specific treatment methods (0.005 mg/l).

Chlorobenzene was detected above its analytical quantification level in 1 of 8 samples; however, it was not found above the level considered achievable by specific treatment methods (0.025 mg/l).

2,4,6-Trichlorophenol was detected above its analytical quantification level in 1 of 9 samples; however, it was not found above the level considered achievable by specific treatment methods (0.025 mg/l).

Chloroform was detected above its analytical quantification level in 2 of 8 samples; however, it was not found above the level considered achievable by specific treatment methods (0.1 mg/l).

Methylene chloride was found above its analytical quantification level in 5 of 8 samples, with values ranging from 0.360 to 1.300 mg/l. This pollutant is not attributable to specific materials or processes associated with continuous casting; however, it is a common solvent used in analytical laboratories, and is not expected to be present in raw wastewaters at concentrations above the level considered achievable by specific available treatment methods (0.100 mg/l).

Arsenic was detected above its analytical quantification level in 4 of 9 samples; however, it was not found above the level considered achievable by specific treatment methods (0.34 mg/l).

Cadmium was detected above its analytical quantification level in 5 of 9 samles; however, it was only found above the level considered achievable by specific treatment methods (0.049 mg/l) in 2 of 9 samples and in 2 of 5 sources. Both of these sources were at a single plant.

Mercury was detected above its analytical quantification level in 3 of 9 samples; however, it was not found above the level considered achievable by specific treatment methods (0.036 mg/l).

Pollutants Detected in a Small Number of Sources. The toxic pollutants listed below were found above their analytical quantification level at only a small number of sources within the category and are uniquely related to only those sources; therefore, they were not selected for consideration in establishing regulations for these wastewater streams. The pollutants are individually discussed following the list.

30. 1,2-*trans*-dichloroethylene
67. butyl benzyl phthalate
71. dimethyl phthalate
76. chrysene
77. acenaphthylene
78. anthracene (a)
81. phenanthrene (a)
85. tetrachloroethylene
87. trichloroethylene
91. chlordane

93. 4,4'-DDE
95. alpha-endosulfan
96. beta-endosulfan
102. alpha-BHC
103. beta-BHC
124. nickel

(a) Reported together

1,2-trans-Dichloroethylene was detected above its analytical quantification level in 1 of 8 samples and in 1 of 4 sources.

Butyl benzyl phthalate was detected above its analytical quantification level in 1 of 9 samples and in 1 of 6 sources.

Dimethyl phthalate was detected above its analytical quantification level in 1 of 9 samples and in 1 of 6 sources.

Chrysene was detected above its analytical quantification level in 1 of 9 samples and in 1 of 6 sources.

Acenaphthylene was detected above its analytical quantification level in 1 of 9 samples and in 1 of 6 sources.

Anthracene and phenanthrene are not cleanly separated by the analytical protocol employed in this study; thus, they are reported together. The sum of these pollutants was reported at values greater than their analytical quantification level in 2 of 9 samples and in 1 of 6 sources.

Tetrachloroethylene was detected above its analytical quantification level in 5 of 8 samples; however, it was only found above the level considered achievable by specific treatment methods (0.05 mg/l) in 3 of 8 samples and in 1 of 4 sources.

Trichloroethylene was detected above its analytical quantification level in 1 of 8 samples and in 1 of 4 sources.

Chlordane was detected above its analytical quantification level in 1 of 7 samples and in 1 of 5 sources.

4,4'-DDE was detected above its analytical quantification level in 1 of 7 samples and in 1 of 5 sources.

Alpha-endosulfan was detected above its analytical quantification level in 1 of 7 samples and in 1 of 5 sources.

Beta-endosulfan was detected above its analytical quantification level in 1 of 7 samples and in 1 of 5 sources.

Alpha-BHC was detected above its analytical quantification level in 1 of 7 samples and in 1 of 5 sources.

Beta-BHC was detected above its analytical quantification level in 1 of 7 samples and in 1 of 5 sources.

Nickel was detected above its analytical quantification level in 6 of 9 samples; however, it was only found above the level considered achievable by specific treatment methods (0.22 mg/l) in 1 of 9 samples and in 1 of 5 sources.

Pollutants Selected for Consideration in Establishing Regulations for the Continuous Sheet Casting and Continuous Rod Casting Spent Lubricants Waste Streams. The toxic pollutants listed below are those not eliminated from consideration for any of the reasons listed above; therefore, each was selected for consideration in establishing regulations for these wastewater streams. The pollutants are individually discussed following the list.

1. acenaphthene
38. ethylbenzene
39. fluoranthene
55. naphthalene
62. N-nitrosodiphenylamine
65. phenol
66. bis(2-ethylhexyl) phthalate
68. di-n-butyl phthalate
70. diethyl phthalate
80. fluorene
84. pyrene
86. toluene
97. endosulfan sulfate
98. endrin
99. endrin aldehyde
106. PCB-1242 (a)
107. PCB-1254 (a)
108. PCB-1221 (a)
109. PCB-1232 (b)
110. PCB-1248 (b)
111. PCB-1260 (b)
112. PCB-1016 (b)
119. chromium
120. copper
121. cyanide
122. lead
128. zinc

(a), (b) Reported together

Acenaphthene was detected above its analytical quantification level and above the level considered achievable by specific treatment methods (0.010 mg/l) in 2 of 9 samples and in 2 of 6 sources.

Ethylbenzene was detected above its analytical quantification level in 5 of 8 samples and above the level considered achievable by specific treatment methods (0.050 mg/l) in 2 of 8 samples and in 2 of 4 sources.

Fluoranthene was detected above its analytical quantification level and above the level considered achievable by specific treatment methods (0.010 mg/l) in 3 of 9 samples and in 2 of 6 sources.

Naphthalene was detected above its analytical quantification level and above the level considered achievable by specific treatment methods (0.050 mg/l) in 2 of 9 samples and in 2 of 6 sources.

N-nitrosodiphenylamine was detected above its analytical quantification level in 3 of 9 samples and in 2 of 6 sources.

Phenol was detected above its analytical quantification level and above the level considered achievable by specific treatment methods (0.050 mg/l) in 3 of 10 samples and in 3 of 6 sources.

Bis(2-ethylhexyl) phthalate was found above its analytical quantification level in 5 of 9 samples. The maximum concentration observed was 2.900 mg/l.

Di-n-butyl phthalate was found above its analytical quantification level in 4 of 9 samples, ranging from 0.330 to 19.000 mg/l.

Diethyl phthalate was found above its analytical quantification level in 4 of 9 samples. Values ranged from 0.220 to 3.100 mg/l.

Fluorene was detected above its analytical quantification level and above the level considered achievable by specific treatment methods (0.010 mg/l) in 5 of 9 samples and in 4 of 6 sources.

Pyrene was detected above its analytical quantification level and above the level considered achievable by specific treatment methods (0.010 mg/l) in 4 of 9 samples and in 3 of 6 sources.

Toluene was detected above its analytical quantification level in 5 of 8 samples and above the level considered achievable by specific treatment methods (0.050 mg/l) in 3 of 8 samples and in 2 of 4 sources.

Endosulfan sulfate was detected above its analytical quantification level in 2 of 7 samples and in 2 of 5 sources.

Endrin was detected above its analytical quantification level in 2 of 7 samples and in 2 of 5 sources.

Endrin aldehyde was detected above its analytical quantification level in 2 of 7 samples and in 2 of 5 sources.

The seven organic toxic pollutant PCB's (polychlorinated biphenyls) are not cleanly separated by the analytical protocol employed in this study; thus, they are reported in two groups. Each of the two PCB groups was reported present above its analytical quantification level in 3 of 7 samples and in 3 of 5 sources at one plant.

Chromium was detected above its analytical quantification level in 8 of 9 samples and above the level considered achievable by specific treatment methods (0.007 mg/l) in 3 of 9 samples and in 3 of 5 sources.

Copper was detected above its analytical quantification level in 8 of 9 samples and above the level considered achievable by specific treatment methods (0.39 mg/l) in 5 of 9 samples and in 4 of 5 sources.

Cyanide was detected above its analytical quantification level in 8 of 10 samples and above the level considered achievable by specific treatment methods (0.047 mg/l) in 6 of 10 samples and in 3 of 6 sources.

Lead was detected above its analytical quantification level in 8 of 9 samples and above the level considered achievable by specific treatment methods (0.08 mg/l) in 6 of 9 samples and in 4 of 5 sources.

Zinc was detected above its analytical quantification level in 8 of 9 samples and above the level considered achievable by specific treatment methods (0.23 mg/l) in 6 of 9 samples and in 4 of 5 sources.

Forging Scrubber Liquor

Pollutants Never Detected. The toxic pollutants listed below were not detected in any samples from this wastewater stream; therefore, they were not selected for consideration in establishing regulations for this wastewater stream.

2. acrolein
3. acrylonitrile
4. benzene

5. benzidine
7. chlorobenzene
8. 1,2,4-trichlorobenzene
9. hexachlorobenzene
10. 1,2-dichloroethane
12. hexachloroethane
13. 1,1-dichloroethane
14. 1,1,2-trichloroethane
15. 1,1,2,2-tetrachloroethane
16. chloroethane
17. DELETED
18. bis(2-chloroethyl) ether
19. 2-chloroethyl vinyl ether
20. 2-chloronaphthalene
21. 2,4,6-trichlorophenol
22. p-chloro-m-cresol
24. 2-chlorophenol
25. 1,2-dichlorobenzene
26. 1,3-dichlorobenzene
27. 1,4-dichlorobenzene
28. 3,3'-dichlorobenzidine
29. 1,1-dichloroethylene
30. 1,2-trans-dichloroethylene
31. 2,4-dichlorophenol
32. 1,2-dichloropropane
33. 1,3-dichloropropylene
35. 2,4-dinitrotoluene
36. 2,6-dinitrotoluene
37. 1,2-diphenylhydrazine
38. ethylbenzene
40. 4-chlorophenyl phenyl ether
41. 4-bromophenyl phenyl ether
42. bis(2-chloroisopropyl) ether
43. bis(2-chloroethoxy) methane
45. methyl chloride
46. methyl bromide
47. bromoform
48. dichlorobromomethane
49. DELETED
50. DELETED
51. chlorodibromomethane
52. hexachlorobutadiene
53. hexachlorocyclopentadiene
54. isophorone
56. nitrobenzene
57. 2-nitrophenol
58. 4-nitrophenol
59. 2,4-dinitrophenol
60. 4,6-dinitro-o-cresol
61. N-nitrosodimethylamine
63. N-nitrosodi-n-propylamine

67. butyl benzyl phthalate
68. di-n-butyl phthalate
69. di-n-octyl phthalate
71. dimethyl phthalate
73. benzo(a)pyrene
74. benzo(b)fluoranthene
75. benzo(k)fluoranthene
77. acenaphthylene
79. benzo(ghi)perylene
80. fluorene
82. dibenzo(a,h)anthracene
83. indeno(1,2,3-c,d)pyrene
85. tetrachloroethylene
86. toluene
87. trichloroethylene
88. vinyl chloride
95. alpha-endosulfan
96. beta-endosulfan
98. endrin
99. endrin aldehyde
100. heptachlor
101. heptachlor epoxide
102. alpha-BHC
104. gamma-BHC
113. toxaphene
116. asbestos
129. 2,3,7,8-tetrachlorodibenzo-p-dioxin

Pollutants Never Found Above Their Analytical Quantification Level. The toxic pollutants listed below were never found above their analytical quantification level in any samples from this wastewater stream; therefore, they were not selected for consideration in establishing regulations for this wastewater stream.

1. acenaphthene
6. carbon tetrachloride
11. 1,1,1-trichloroethane
23. chloroform
34. 2,4-dimethylphenol
55. naphthalene
64. pentachlorophenol
65. phenol
70. diethyl phthalate
89. aldrin
90. dieldrin
91. chlordane
92. 4,4'-DDT
93. 4,4'-DDE
94. 4,4'-DDD
97. endosulfan sulfate
103. beta-BHC

105. delta-BHC
106. PBC-1242 (a)
107. PBC-1254 (a)
108. PBC-1221 (a)
109. PBC-1232 (b)
110. PBC-1248 (b)
111. PBC-1260 (b)
112. PBC-1016 (b)
114. antimony
115. arsenic
117. beryllium
118. cadmium
119. chromium
121. cyanide
124. nickel
125. selenium
126. silver
127. thallium

(a),(b) Reported together

Pollutants Detected Below Levels Achievable by Treatment. The toxic pollutants listed below were found above their analytical quantification level only at a concentration below the concentration considered achievable by specific available treatment methods; therefore, they were not selected for consideration in establishing regulations for this wastewater stream. The pollutants are individually discussed following the list.

44. methylene chloride
120. copper
123. mercury

The presence of methylene chloride in this wastewater sample at the high level observed (0.95 mg/l) is assumed to be due to sample contamination, since methylene chloride is used by the analytical laboratory to extract the non-volatile organics from the sample, and is not expected to be present in raw wastewaters at concentrations above the level considered achievable by specific available treatment methods (0.100 mg/l).

Copper was measured at a concentration of 0.010 mg/l in the one sample collected. This value is only slightly greater than the values for its analytical quantification level (0.009 mg/l), and less than the level considered achievable by available treatment methods (0.39 mg/l). In addition, the source water at the same plant also contained copper at 0.010 mg/l.

Mercury was reported at 0.0005 mg/l in the only sample collected; the level considered achievable by specific available treatment is 0.036 mg/l. Moreover, the source water at the same plant contained mercury at 0.0006 mg/l.

Pollutants Detected Below Source Water Concentrations. The toxic pollutants listed below were found above their analytical quantification level solely as a result of their presence in the intake water to the production process; therefore, they were not selected for consideration in establishing regulations for this wastewater stream. The pollutants are individually discussed following the list.

66. bis(2-ethylhexyl)phthalate

Bis(2-ethylhexyl) phthalate was present at a concentration of 0.075 mg/l in the one sample collected. A sample of source water collected at the sampled plant contained this pollutant at a concentration of 0.200 mg/l. The origin of this pollutant at this plant seems to be the source water.

Pollutants Selected for Consideration in Establishing Regulations for the Forging Scrubber Liquor Waste Stream. The toxic pollutants listed below are those not eliminated from consideration for any of the reasons listed above; therefore, each was selected for consideration in establishing regulations for this wastewater stream. The pollutants are individually discussed following the list.

39. fluoranthene
62. N-nitrosodiphenylamine
72. benzo(a)anthracene
76. chrysene
78. anthracene (a)
81. phenanthrene (a)
84. pyrene
122. lead
128. zinc

(a) Reported together

Fluoranthene was found at a concentration of 0.018 mg/l in the waste stream sample. For fluoranthene, this exceeds both its analytical quantification level of 0.010 mg/l, and the level considered achievable by specific available treatment methods, which is also 0.010 mg/l.

N-nitrosodiphenylamine was found above the levels for both its proposed water quality criterion and its analytical quantification level as well as the level considered attainable by specific available treatment methods. The observed pollutant concentration was 0.017 mg/l.

Benzo(a)anthracene was found present in the sample at 0.019 mg/l. This exceeds both its analytical quantification level, and the level considered achievable by specific available treatment methods.

Chrysene was detected at a level of 0.019 mg/l in the only sample collected from this waste stream. The analytical quantification level for chrysene is 0.010 mg/l, and the level considered achievable by specific available treatment is 0.010 mg/l. The concentration of chrysene exceeds this level.

The combined concentration of anthracene and phenanthrene in this waste stream was found to be 0.028 mg/l. This exceeds the analytical quantification level and treatability level, both of which are 0.010 mg/l.

Pyrene was found at a concentration of 0.021 mg/l in the waste stream sample, which is above the analytical quantification level of 0.010 mg/l for pyrene. This concentration is also above the treatability level (0.010 mg/l).

Lead was present in the sample at a concentration of 2.00 mg/l. This exceeds the analytical quantification level and the level considered achievable by available treatment methods (0.020 mg/l and 0.08 mg/l, respectively) for lead.

Zinc was found in the sample at a concentration of 0.300 mg/l which exceeds the concentration considered achievable by available treatment technologies (0.23 mg/l).

Solution and Press Heat Treatment Contact Cooling Water

Pollutants Never Detected. The toxic pollutants listed below were not detected in any samples from thess wastewater streams; therefore, they were not selected for consideration in establishing regulations for these wastewater streams.

2. acrolein
3. acrylonitrile
5. benzidine
7. chlorobenzene
8. 1,2,4-trichlorobenzene
9. hexachlorobenzene
10. 1,2-dichloroethane
12. hexachloroethane
13. 1,1-dichloroethane
15. 1,1,2,2-tetrachloroethane
16. chloroethane
17. DELETED
18. bis(2-chloroethyl) ether
19. 2-chloroethyl vinyl ether
20. 2-chloronaphthalene
21. 2,4,6-trichlorophenol
22. p-chloro-m-cresol
25. 1,2-dichlorobenzene
26. 1,3-dichlorobenzene

27. 1,4-dichlorobenzene
28. 3,3'-dichlorobenzidine
31. 2,4-dichlorophenol
32. 1,2-dichloropropane
33. 1,3-dichloropropylene
35. 2,4-dinitrotoluene
36. 2,6-dinitrotoluene
37. 1,2-diphenylhydrazine
39. fluoranthene
40. 4-chlorophenyl phenyl ether
41. 4-bromophenyl phenyl ether
42. bis(2-chloroisopropyl) ether
43. bis(2-chloroethyoxy) methane
45. methyl chloride
46. methyl bromide
49. DELETED
50. DELETED
52. hexachlorobutadiene
53. hexachlorocyclopentadiene
54. isophorone
55. naphthalene
56. nitrobenzene
57. 2-nitrophenol
59. 2,4-dinitrophenol
60. 4,6-dinitro-o-cresol
61. N-nitrosodimethylamine
63. N-nitrosodi-n-propylamine
64. pentachlorophenol
72. benzo(a)anthracene
73. benzo(a)pyrene
74. benzo(b)fluoranthene
75. benzo(k)fluoranthene
79. benzo(ghi)perylene
82. dibenzo(a,h)anthracene
83. indeno(1,2,3-c,d)pyrene
88. vinyl chloride
113. toxaphene
116. asbestos
129. 2,3,7,8-tetrachlorodibenzo-p-dioxin

Pollutants Never Found Above Their Analytical Quantification Level. The toxic pollutants listed below were never found above their analytical quantification level in any samples from this wastewater stream; therefore, they were not selected for consideration in establishing regulations for these wastewater streams.

6. carbon tetrachloride
14. 1,1,2-trichloroethane
29. 1,1-dichloroethylene
34. 2,4-dimethylphenol
51. chlorodibromomethane

62. N-nitrosodiphenylamine
76. chrysene
77. acenaphthylene
78. anthracene (a)
80. fluorene
81. phenanthrene (a)
84. pyrene
89. aldrin
90. dieldrin
91. chlordane
92. 4,4'-DDT
93. 4,4'-DDE
94. 4,4'-DDD
102. alpha-BHC
103. beta-BHC
104. gamma-BHC
105. delta-BHC
106. PCB-1242 (b)
107. PCB-1254 (b)
108. PCB-1221 (b)
109. PCB-1232 (c)
110. PCB-1248 (c)
111. PCB-1260 (c)
112. PCB-1016 (c)
117. beryllium

(a), (b), (c) Reported together

Pollutants Detected Below Levels Achievable by Treatment. The toxic pollutants listed below were found above their analytical quantification level only at a concentration below the concentration considered achievable by specific available treatment methods; therefore, they were not selected for consideration in establishing regulations for this wastewater stream. The pollutants are individually discussed following the list.

44. methylene chloride
66. bis(2-ethylhexyl) phthalate
115. arsenic
118. cadmium
120. copper
123. mercury
124. nickel
127. thallium

Methylene chloride was found in concentrations above both its analytical quantification level and its treatability level in 9 of 34 samples taken. However, since methylene chloride is normally used in the laboratory to extract nonvolatile organics from the sample, and there is no process or material in the waste stream to which the pollutant may be attributed, the sample was

assumed to have been contaminated. Methylene chloride is not expected to be present in raw wastewaters at concentrations above the level considered achievable by specific available treatment methods.

Bis(2-ethylhexyl) phthalate was found above its analytical quantification level in 13 of 28 samples. This pollutant is not attributable to specific materials or processes associated with heat treatment press or solution contact cooling operations, and is not expected to be present in raw wastewaters at concentrations above the level considered achievable by specific available treatment mehtods (0.010 mg/l).

Arsenic was detected above its analytical quantification level in 16 of 43 samples; however, it was not found above the level considered achievable by specific treatment methods (0.34 mg/l).

Cadmium was detected above its analytical quantification level in 14 of 42 samples; however, it was not found above the level considered achievable by specific treatment methods (0.049 mg/l).

Copper was detected above its analytical quantification level in 38 of 42 samples; however, it was not found above the level considered achievable by specific treatment methods (0.39 mg/l).

Mercury was detected above its analytical quantification level in 16 of 42 samples; however, it was not found above the level considered achievable by specific treatment methods (0.036 mg/l).

Nickel was detected above its analytical quantification level in 18 of 42 samples; however, it was not found above the level considered achievable by specific treatment methods (0.22 mg/l).

Thallium was detected above its analytical quantification level in seven of thirty-six samples; however, it was not found above the level considered achievable by specific treatment methods (0.34 mg/l).

Pollutants Detected in a Small Number of Sources. The toxic pollutants listed below were found above their analytical quantification level at only a small number of sources within the category and are uniquely related to only those sources; therefore, they were not selected for consideration in establishing regulations for this wastewater stream. The pollutants are individually discussed following the list.

1. acenaphthene
4. benzene
11. 1,1,1-trichloroethylene
23. chloroform
24. 2-chlorophenol

30. 1,2-trans-dichloroethylene
38. ethylbenzene
47. bromoform
48. dichlorobromomethane
58. 4-nitrophenol
65. phenol
67. butyl benzyl phthalate
68. di-n-butyl phthalate
69. di-n-octyl phthalate
70. diethyl phthalate
71. dimethyl phthalate
85. tetrachloroethylene
86. toluene
87. trichloroethylene
95. alpha-endosulfan
96. beta-endosulfan
97. endosulfan sulfate
98. endrin
99. endrin aldehyde
100. heptachlor
101. heptachlor epoxide
114. antimony
126. silver
128. zinc

Acenaphthene was detected above its analytical quantification level in 2 of 28 samples and in 2 of 18 sources.

Benzene was detected above its analytical quantification level in 8 of 34 samples; however, it was only found above the level considered achievable by specific treatment methods (0.05 to 0.100 mg/l) in 2 of 34 samples and in 2 of 17 sources.

1,1,1-Trichloroethylene was detected above its analytical quantification level in 7 of 34 samples; however, it was only found above the level considered achievable by specific treatment methods (<0.022 mg/l) in 1 of 34 samples and in 1 of 17 sources.

Chloroform was detected above its analytical quantification level in 14 of 34 samples; however, it was only found above the level considered achievable by specific treatment methods (0.01 mg/l) in 1 of 34 samples and in 2 of 17 sources.

2-Chlorophenol was detected above its analytical quantification level in 1 of 28 samples and in 1 of 18 sources.

1,2-trans-Dichloroethylene was detected above its analytical quantification level in 1 of 34 samples and in 1 of 17 sources.

Ethylbenzene was detected above its analytical quantification level in 2 of 34 samples and in 1 of 17 sources.

Bromoform was detected above its analytical quantification level in 1 of 34 samples and in 1 of 17 sources.

Dichlorodibromomethane was detected above its analytical quantification level in 1 of 34 samples and in 1 of 17 sources.

4-Nitrophenol was detected above its analytical quantification level in 1 of 28 samples and in 1 of 18 sources.

Phenol was detected above its analytical quantification level in 4 of 28 samples; however, it was only found above the level considered achievable by specific treatment methods (0.05 mg/l) in 1 of 28 samples and in 1 of 18 sources.

Butyl benzyl phthalate was detected above its analytical quantification level in 3 of 28 samples and in 1 of 18 sources.

Di-n-butyl phthalate was detected above its analytical quantification level in 6 of 28 samples; however, it was only found above the level considered achievable by specific treatment methods (0.025 mg/l) in 1 of 28 samples and in 1 of 18 sources.

Di-n-octyl phthalate was detected above its analytical quantification level in 7 of 34 samples; however, it was only found above the level considered achievable by specific treatment methods (<0.022 mg/l) in 1 of 34 samples and in 1 of 17 sources.

Di-n-octyl phthalate was detected above its analytical quantification level in 2 of 28 samples and in 2 of 18 sources.

Diethyl phthalate was detected above its analytical quantification level in 3 of 28 samples and in 3 of 18 sources.

Dimethyl phthalate was detected above its analytical quantification level in 3 of 28 samples and in 3 of 18 sources.

Tetrachloroethylene was detected above its analytical quantification level in 3 of 34 samples and in 2 of 17 sources.

Toluene was detected above its analytical quantification level in 5 of 34 samples; however, it was only found above the level considered achievable by specific treatment methods (0.05 mg/l) in 1 of 34 samples and in 1 of 17 sources.

Trichloroethylene was detected above its analytical quantification level in 2 of 34 samples and in 2 of 17 sources.

Alpha-endosulfan was detected above its analytical quantification level in 1 of 24 samples and in 1 of 18 sources.

Beta-endosulfan was detected above its analytical quantification level in 1 of 24 samples and in 1 of 18 sources.

Endosulfan sulfate was detected above its analytical quantification level in 1 of 24 samples and in 1 of 18 sources.

Endrin was detected above its analytical quantification level in 1 of 24 samples and in 1 of 18 sources.

Endrin aldehyde was detected above its analytical quantification level in 1 of 24 samples and in 1 of 18 sources.

Heptachlor was detected above its analytical quantification level in 1 of 24 samples and in 1 of 18 sources.

Heptachlor epoxide was detected above its analytical quantification level in 2 of 24 samples and in 2 of 18 sources.

Antimony was detected above its analytical quantification level in 11 of 36 samples; however, it was only found above the level considered achievable by specific treatment methods (0.034 mg/l) in 1 of 36 samples and in 1 of 20 sources.

Silver was detected above its analytical quantification level in 6 of 36 samples; however, it was only found above the level considered achievable by specific treatment methods (0.07 mg/l) in 1 of 36 samples and in 1 of 20 sources.

Zinc was detected above its analytical quantification level in 31 of 42 samples; however, it was only found above the level considered achievable by specific treatment methods (0.23 mg/l) in 3 of 42 samples and in 2 of 24 sources.

Pollutants Selected for Consideration in Establishing Regulations for the Solution and Press Heat Treatment Contact Cooling Water Waste Stream. The toxic pollutants listed below are those not eliminated from consideration for any of the reasons listed above; therefore, each was selected for consideration in establishing regulations for this wastewater stream. The pollutants are individually discussed following the list.

119. chromium
121. cyanide
122. lead
125. selenium

Chromium was detected above its analytical quantification level in 35 of 42 samples and was found above the level considered achievable by specific treatment methods (0.07 mg/l) in 6 of 42 samples.

Cyanide was detected above its analytical quantification level in 32 of 43 samples and was found above the level considered achievable by specific treatment methods (0.047 mg/l) in 9 of 43 samples.

Lead was detected above its analytical quantification level in 29 of 42 samples and was found above the level considered achievable by specific treatment methods (0.08 mg/l) in 5 of 42 samples.

Selenium was detected above its analytical quantification level in 7 of 36 samples and was found above the level considered achievable by specific treatment methods (0.007 mg/l) in 5 of 36 samples.

Cleaning or Etching Bath

Pollutants Never Detected. The toxic pollutants listed below were not detected in any samples from this wastewater stream; therefore, they were not selected for consideration in establishing regulations for this wastewater stream.

2. acrolein
3. acrylonitrile
5. benzidine
7. chlorobenzene
8. 1,2,4-trichlorobenzene
9. hexachlorobenzene
10. 1,2-dichloroethane
11. 1,1,1-trichloroethane
12. hexachloroethane
13. 1,1-dichloroethane
14. 1,1,2-trichloroethane
15. 1,1,2,2-tetrachloroethane
16. chloroethane
17. DELETED
18. bis(2-chloroethyl) ether
19. 2-chloroethyl vinyl ether
20. 2-chloronaphthalene
25. 1,2-dichlorobenzene
26. 1,3-dichlorobenzene
27. 1,4-dichlorobenzene
28. 3,3'-dichlorobenzidine
29. 1,1-dichloroethylene
30. 1,2-trans-dichloroethylene
32. 1,2-dichloropropane
33. 1,3-dichloropropylene
35. 2,4-dinitrotoluene
36. 2,6-dinitrotoluene
40. 4-chlorophenyl phenyl ether
41. 4-bromophenyl phenyl ether
42. bis(2-chloroisopropyl) ether

43. bis(2-chloroethoxy) methane
45. methyl chloride
46. methyl bromide
47. bromoform
48. dichlorobromomethane
49. DELETED
50. DELETED
51. chlorodibromomethane
52. hexachlorobutadiene
53. hexachlorocyclopentadiene
55. naphthalene
56. nitrobenzene
58. 4-nitrophenol
60. 4,6-dinitro-o-cresol
61. N-nitrosodimethylamine
63. N-nitrosodi-n-propylamine
74. benzo(b)fluoranthene
75. benzo(k)fluroanthene
79. benzo(ghi)perylene
82. dibenzo(a,h)anthracene
83. indeno(1,2,3-c,d)pyrene
86. toluene
87. trichloroethylene
88. vinyl chloride
89. aldrin
113. toxaphene
116. asbestos
129. 2,3,7,8-tetrachlorodibenzo-p-dioxin

Pollutants Never Found Above Their Analytical Quantification Level. The toxic pollutants listed below were never found above their analytical quantification level in any samples from this wastewater stream; therefore, they were not selected for consideration in establishing regulations for this wastewater stream.

1. acenaphthene
4. benzene
6. carbon tetrachloride
21. 2,4,6-trichlorophenol
24. 2-chlorphenol
31. 2,4-dichlorophenol
37. 1,2-diphenylhydrazine
38. ethylbenzene
54. isophorone
57. 2-nitrophenol
62. N-nitrosodiphenylamine
67. butyl benzyl phthalate
72. benzo(a)anthracene
73. benzo(a)pyrene
76. chrysene
77. acenaphthylene

78. anthracene (a)
80. fluorene
81. phenanthrene (a)
84. pyrene
85. tetrachloroethylene
90. dieldrin
91. chlordane
92. 4,4'-DDT
93. 4,4'-DDE
94. 4,4'DDD
95. alpha-endosulfan
96. beta-endosulfan
97. endosulfan sulfate
98. endrin
100. heptachlor
101. heptachlor epoxide
102. alpha-BHC
103. beta-BHC
104. gamma-BHC
105. delta-BHC
106. PCB-1242 (b)
107. PCB-1254 (b)
108. PCB-1221 (b)
109. PCB-1232 (c)
110. PCB-1248 (c)
111. PCB-1260 (c)
112. PCB-1016 (c)
114. antimony
117. beryllium
125. selenium
126. silver
127. thallium

(a),(b),(c) Reported together

Pollutants Detected Below Levels Achievable by Treatment. The toxic pollutants listed below were found above their analytical quantification level only at a concentration below the concentration considered achievable by specific available treatment methods; therefore, they were not selected for consideration in establishing regulations for this wastewater stream. The pollutants are individually discussed following the list.

22. p-chloro-m-cresol
23. chloroform
34. 2,4-dimethylphenol
44. methylene chloride
65. phenol
71. dimethyl phthalate
115. arsenic
123. mercury

p-Chloro-m-cresol was reported present above it analytical quantification level in one of six samples. The observed value, 0.021 mg/l, is less than that of 0.05 mg/l, which is considered achievable by specific available treatment methods.

Chloroform was reported present above its analytical quantification level in one of four samples. The observed value of 0.020 mg/l is less than the concentration of 0.1 mg/l, which is considered achievable by specific available treatment methods. In addition, the concentration of chloroform in the source water is higher than in the waste stream, indicating that the chloroform did not originate at the sampled plant.

2,4-Dimethylphenol was reported present above its analytical quantification level in one of six samples. The observed value was 0.034 mg/l; the level considered achievable by specific treatment methods is 0.05 mg/l.

Methylene chloride was reported present above its analytical quantification level in two of four samples. The reported concentrations were 0.015 and 0.039 mg/l; the level considered achievable by treatment is 0.1 mg/l. Both wastewater samples were measurable concentrations of methylene chloride were collected at the same plant; at that plant, a concentration of 0.220 mg/l methylene chloride was reported for the source water.

Phenol was reported present above its analytical quantification level in three of six samples. The maximum value reported was 0.035 mg/l; the level considered achievable by specific available treatment is 0.05 mg/l.

Dimethyl phthalate was reported present above its analytical quantification level in only one of six samples. The reported concentration was 0.013 mg/l, whereas the concentration considered attainable by specific available treatment methods is 0.025 mg/l.

Arsenic was reported present above its analytical quantification level in two of four samples. The maximum value reported was 0.14 mg/l; the level considered achievable by specific available treatment is 0.34 mg/l.

Mercury was reported present above its analytical quantification level in all three samples. The maximum value reported was 0.020 mg/l, whereas a concentration of 0.036 mg/l is considered achievable by specific treatment methods.

Pollutants Detected Below Source Water Concentrations. The toxic pollutants listed below were found above their analytical quantification level solely as a result of their presence in the intake water to the production process; therefore, they were not

selected for consideration in establishing regulation for this wastewater stream. The pollutants are individually discussed following the list.

66. bis(2-ethylhexyl) phthalate
68. di-n-butyl phthalate

Bis(2-ethylhexyl) phthalate was detected above its analytical quantification level in four of six samples. The two higher values reported were 0.025 and 0.033 mg/l; these two samples were collected from the same plant, for which a concentration of 0.200 mg/l of this pollutant was measured in the source water. The other reported values were 0.021 and 0.009 mg/l.

Di-n-butyl phthalate was reported present above its analytical quantification level in three of six samples. Two of the samples containing this pollutant came from the same plant; the concentrations of pollutant in the wastewaters were less than its concentration in the plant's source water. The other reported value was 0.003 mg/l.

Pollutants Detected in a Small Number of Sources. The toxic pollutants listed below were found above their analytical quantification level at only a small number of sources within the category and are uniquely related to only those sources; therefore, they were not selected for consideration in establishing regulations for this wastewater stream. The pollutants are individually discussed following the list.

39. fluoranthene
59. 2,4-dinitrophenol
64. pentachlorophenol
69. di-n-octyl phthalate
70. diethyl phthalate
99. endrin aldehyde

Fluoranthene was reported above its analytical quantification level in two of six samples and in two of six sources.

2,4-Dinitrophenol was reported present in two of six samples and in two of six sources.

Pentachlorphenol was reported present above its analytical quantification level in one of six samples and in one of six sources. The observed value was 0.012 mg/l; the value considered achievable by treatment is 0.010 mg/l.

Di-n-octyl phthalate was reported present above its analytical quantification level in one of six samples and in one of six sources.

Diethyl phthalate was reported present above its analytical quantification level in one of six samples and in one of six sources.

Endrin aldehyde was reported present above its analytical quantification level in one of six samples and in one of six sources.

Pollutants Selected for Consideration in Establishing Regulations for the Cleaning or Etching Bath Waste Stream. The toxic pollutants listed below are those not eliminated from consideration for any of the reasons listed above; therefore, each was selected for consideration in establishing regulations for this wastewater stream. The pollutants are individually discussed following the list.

118. cadmium
119. chromium
120. copper
121. cyanide
122. lead
124. nickel
128. zinc

Cadmium was reported above its analytical quantification level in all three samples collected. The cadmium concentrations observed were 0.005, 0.050, and 3.000 mg/l. Two of the three concentrations are above the level of 0.049 mg/l, which is considered achievable by specific available treatment methods.

Chromium was reported above its analytical quantification level in all three samples collected. The chromium concentrations observed were 0.020, 0.400, and 10.00 mg/l. Two of the three concentrations are above the level of 0.07 mg/l, which is considered achievable by specific available treatment methods.

Copper was reported present above its analytical quantification level in all three samples collected. The range of concentrations observed was from approximately 5 to 20 mg/l. The level of copper considered achievable by specific available treatment methods is 0.39 mg/l.

Cyanide was reported present above its analytical quantification level in five of six samples. Four of the values were above the level of cyanide considered achievable by specific available treatment methods (0.047 mg/l).

Lead was reported present above its analytical quantification level in all three samples collected. The reported lead concentrations ranged from 0.400 to 90.0 mg/l. A lead concentration of 0.08 mg/l is considered achievable by specific available treatment methods.

Nickel was reported present above its analytical quantification level in all three samples collected. The range of concentrations observed was from 0.100 to approximately 3 mg/l. A nickel concentration of 0.22 mg/l is considered achievable by specific available treatment methods.

Zinc was reported present above its analytical quantification level in all three samples collected. The concentrations of zinc reported ranged from 0.500 to approximately 30 mg/l. The concentration of zinc considered achievable by specific available treatment methods is 0.23 mg/l.

Cleaning or Etching Rinse

Pollutants Never Detected. The toxic pollutants listed below were not detected in any samples from this wastewater stream; therefore, they were not selected for consideration in establishing regulations for this wastewater stream.

2. acrolein
3. acrylonitrile
5. benzidine
8. 1,2,4-trichlorobenzene
9. hexachlorobenzene
12. hexachloroethane
13. 1,1-dichloroethane
15. 1,1,2,2-tetrachloroethane
16. chloroethane
17. DELETED
18. bis(2-chloroethyl) ether
19. 2-chloroethyl vinyl ether
20. 2-chloronaphthalene
21. 2,4,6-trichlorophenol
25. 1,2-dichlorobenzene
26. 1,3-dichlorobenzene
27. 1,4-dichlorobenzene
28. 3,3'-dichlorobenzidine
29. 1,1-dichloroethylene
32. 1,2-dichloropropane
33. 1,3-dichloropropylene
34. 2.4-dimethylphenol
35. 2,4-dinitrotoluene
36. 2,6-dinitrotoluene
37. 1,2-diphenylhydrazine
40. 4-chlorophenyl phenyl ether
41. 4-bromophenyl phenyl ether
42. bis(2-chlorisopropyl) ether
43. bis(2-chloroethoxy) methane
45. methyl chloride
46. methyl bromide
47. bromoform

49. DELETED
50. DELETED
52. hexachlorobutadiene
53. hexachlorocyclopentadiene
56. nitrobenzene
58. 4-nitrophenol
59. 2,4-dinitrophenol
60. 4,6-dinitro-o-cresol
61. N-nitrosodimethylamine
62 N-nitrosodiphenylamine
63. N-nitrosodi-n-propylamine
72. benzo(a)anthracene
73. benzo(a)pyrene
74. benzo(b)fluoranthene
75. benzo(k)fluoranthene
79. benzo(ghi)perylene
82. dibenzo(a,h)anthracene
83. indeno(1,2,3-c,d)pyrene
88. vinyl chloride
113. toxaphene
116. asbestos
129. 2,3,7,8 tetrachlorodibenzo-p-dioxin

Pollutants Never Found Above Their Analytical Quantification Level. The toxic pollutants listed below were never found above their analytical quantification level in any samples from this wastewater stream; therefore, they were not selected for consideration in establishing regulations for this wastewater stream.

6. carbon tetrachloride
7. chlorobenzene
10. 1,2-dichloroethane
11. 1,1,1-trichloroethane
14. 1,1,2-trichloroethane
22. p-chloro-m-cresol
24. 2-chlorophenol
31. 2,4-dichlorophenol
38. ethylbenzene
39. fluoranthene
48. dichlorobromethane
64. pentachlorophenol
71. dimethyl phthalate
76. chrysene
77. acenaphthylene
78. anthracene (a)
80. fluorene
81. phenathrene,(a)
84. pyrene
85. tetrachloroethylene
86. toluene

87. trichloroethylene
89. aldrin
90. dieldrin
91. chlordane
92. 4,4'-DDT
93. 4,4'-DDE
94. 4,4'DDD
95. alpha-endosulfan
96. beta-endosulfan
97. endosulfan sulfate
98. endrin
99. endrin aldehyde
100. heptachlor
101. heptachlor epoxide
102. alpha-BHC
103. beta-BHC
104. gamma-BHC
105. delta-BHC
114. antimony
125. selenium
126. silver
127. thallium

(a) Reported together

Pollutants Detected Below Levels Achievable By Treatment. The toxic pollutants listed below were found above their analytical quantification level only at a concentration below the concentration considered achievable by specific available treatment methods; therefore, they were not selected for consideration in establishing regulations for this wastewater stream. The pollutants are individually discussed following the list.

4. benzene
23. chloroform
34. 2,4-dimethylphenol
44. methylene chloride
51. chlorodibromomethane
54. isophorone
70. diethyl phthalate
114. arsenic
121. cyanide
123. mercury

Benzene was found above its analytical quantification level in 6 of 42 samples. The maximum concentration observed was 0.043 mg/l. The level considered achievable by specific available treatment methods is 0.05 mg/l; none of the samples was above this level.

Chloroform was found above its analytical quantification level in 24 of 42 samples. The maximum concentration observed was 0.11 mg/l. The level considered achievable by specific available treatment methods is 0.1 mg/l; only one of the samples was above this level.

2,4-Dimethylphenol was found above its analytical quantification level in only one of 36 samples. The concentration observed was 0.019 mg/l. The level considered achievable by specific available treatment methods is 0.05 mg/l; the detected value was not above this level. Chlorodibromomethane was found above its analytical quantification level in 2 of 42 samples. The maximum concentration observed was 0.02 mg/l. This is below the concentration considered achievable with available treatment methods (0.1 mg/l).

Methylene chloride was measured above its analytical level in 22 of 42 samples. The maximum concentration observed was 6.1 mg/l. This pollutant was also found above its analytical quantification level in 10 of 20 source water samples with the highest concentration at 1.3 mg/l. Methylene chloride was also measured above its analytical quantification level in most of the volatiles blank samples, the highest concentration observed being 20.6 mg/l. These observations indicated the probability that either the samples were contaminated, or that the source water was the major source of methylene chloride, or both. Methylene chloride is not expected to be present in raw wastewaters at concentrations above the level considered achievable by specific available treatment methods (0.100 mg/l).

Isophorone was found above its analytical quantification level in only 1 of 36 samples. The concentration observed was 0.16 mg/l. The level considered achievable by specific available treatment methods is 0.05 mg/l; the observed value was not above this level.

Diethyl phthalate was found above its analytical quantification level in 3 of 36 samples. The maximum concentration observed was 0.22 mg/l. The level considered achievable by specific available treatment methods is 0.025 mg/l; none of the samples were above this level. In addition, this pollutant is a plasticizer found in many plastic products used in manufacturing plants and is not considered to be attributable to specific materials or processing in the cleaning or etching rinse operation.

Arsenic was found above its analytical quantification level in 16 of 33 samples. The maximum concentration observed was 0.28 mg/l. The level of arsenic considered achievable by specific available treatment methods is 0.34 mg/l; none of the samples were above this level.

Cyanide was measured above its analytical quantification level in 18 of 35 samples. The maximum concentration observed was 0.042 mg/l. None of the samples exceeded the concentration considered achievable with available treatment technologies (0.047 mg/l).

Mercury was found above its analytical quantification level in 15 of 31 samples. The maximum concentration observed was 0.021 mg/l. The level considered achievable by specific available treatment methods is 0.36 mg/l.

Pollutants Detected In A Small Number of Sources. The toxic pollutants listed below were found above their analytical quantification level at only a small number of sources within the category and are uniquely related to only those sources; therefore, they were not selected for consideration in establishing regulations for this wastewater stream. The pollutants are individually discussed following the list.

1. acenaphthene
30. 1,2-trans-dichloroethylene
55. naphthalene
65. phenol
66. bis(2-ethylhexyl) phthalate
67. butyl benzyl phthalate
68. di-n-butyl phthalate
69. di-n-octyl phthalate
106. PCB-1242 (b)
107. PCB-1254 (b)
108. PCB-1221 (b)
109. PCB-1232 (c)
110. PCB-1248 (c)
111. PCB-1260 (c)
112. PCB-1016 (c)
117. beryllium
118. cadmium

(a), (b) Reported together

Acenaphthene was found above its analytical quantification level in 1 of 36 samples and in one of 20 sources. The concentration observed was 0.017 mg/l. The level considered achievable by specific available treatment methods is 0.01 mg/l.

1,2-trans-Dichloroethylene was found above its analytical quantification level in only 1 of 42 samples and 1 of 20 sources. The only measurable concentration observed was 0.11 mg/l. The level considered achievable by specific available treatment methods is 0.1 mg/l.

Naphthalene was measured above its analytical quantification level in only 1 of 36 samples and in 1 of 20 sources. The concentration observed was equal to the treatability level (0.05 mg/l).

Phenol was found above its analytical quantification level in 2 of 36 samples. The maximum concentration observed was 0.063 mg/l. The level considered achievable by specific available treatment methods is 0.05 mg/l; only one of the observed values was above this level.

Bis(2-ethylhexyl) phthalate was measured above its analytical quantification level in 8 of 36 samples and in 6 of 20 sources. The highest concentration observed was 0.098 mg/l. This compound is a plasticizer found in many plastic materials used in manufacturing plants and is not considered to be attributable to specific materials or processing in the cleaning or etching rinse operation.

Butyl benzyl phthalate was found above its analytical quantification level in 1 of 36 samples and in 1 of 20 sources. The only measurable concentration observed was 0.066 mg/l. The level considered achievable by specific available treatment methods is 0.01 mg/l; only one sample that level. In addition, this pollutant is a plasticizer found in many plastic products used in manufacturing plants and is not considered to be attributable to specific materials or processing in the cleaning or etching rinse operation.

Di-n-butyl phthalate was found above its analytical quantification level in 2 of 36 samples and in 2 of 20 sources. The maximum concentration observed was 0.068 mg/l. The level considered achievable by specific available treatment methods is 0.025 mg/l; both observed values were above this level; however, this pollutant is a plasticizer found in many plastic products used in manufacturing plants and is not considered to be attributable to specific materials or processing in the cleaning or etching rinse operation.

Di-n-octyl phthalate was measured above its analytical quantification level in 2 of 36 samples and in 2 of 20 sources. The highest concentration observed was 0.038 mg/l. This compound is a plasticizer found in many plastic materials used in manufacturing plants, and is not considered to be point source specific.

PCB-1242, PCB-1254, and PCB-1221 were measured above their analytical quantification level in only one of 27 samples and in one of 19 sources. The concentration of ths sample was 0.016 mg/l.

PCB-1232, PCB-1248, PCB-1260, and PCB-1016 were measured above their analytical quantification level in only 1 of 27 samples and in 1 of 19 sources. The concentration measured was 0.02 mg/l.

Beryllium was found above its analytical quantification level in 7 of 31 samples and in 4 of 14 sources. The maximum concentration observed was 0.200 mg/l. The level considered achievable by specific available treatment methods is 0.20 mg/l.

Cadmium was measured above its analytical quantification level in 14 of 31 samples and in 8 of 17 sources. The highest concentration observed was 0.2 mg/l. Of the 31 samples, only one sample exceeded a cadmium concentration of 0.049 mg/l, which is considered achievable by specific available treatment methods.

Pollutants Selected For Consideration In Establishing Regulations For The Cleaning Or Etching Rinse Waste Stream. The toxic pollutants listed below are those not eliminated from consideration for any of the reasons listed above; therefore, each was selected for consideration in establishing regulations for this wastewater stream. The pollutants are individually discussed following the list.

119. chromium
120. copper
122. lead
124. nickel
128. zinc

Chromium was measured above its analytical quantification level in 30 of 31 samples and 16 of 17 sources. The highest concentration observed was 280 mg/l. Of the 31 samples, 20 samples contained chromium in excess of 0.07 mg/l, which is considered achievable by specific available treatment methods.

Copper was measured above its analytical quantification level in all 31 samples collected and in all 17 sources. The highest concentration observed was 480 mg/l. The concentration of copper in 16 samples exceeded 0.39 mg/l, which is considered achievable by specific available treatment methods.

Lead was measured above its analytical quantification level in 23 of 31 samples and in 13 of 31 sources. The highest concentration observed was 11 mg/l. The concentration of lead in 13 samples exceeded 0.08 mg/l, which is considered achievable by specific available treatment methods.

Zinc was measured above its analytical quantification level in 29 of 31 samples and in all sources. The highest concentration observed was 410 mg/l. The concentration of zinc in 17 samples exceeded 0.23 mg/l, which is considered achievable by specific available treatment methods.

Cleaning or Etching Scrubber Liquor

Pollutants Never Detected. The toxic pollutants listed below were not detected in any samples from this wastewater stream; therefore, they were not selected for consideration in establishing regulations for this wastewater stream.

1. acenaphthene
2. acrolein
3. acrylonitrile
4. benzene
5. benzidine
6. carbon tetrachloride
7. chlorobenzene
8. 1,2,4-trichlorobenzene
9. hexachlorobenzene
10. 1,2-dichloroethane
11. 1,1,1-trichloroethane
12. hexachloroethane
13. 1,1-dichlorethane
14. 1,1,2-trichloroethane
15. 1,1,2,2-tetrachloroethane
16. chloroethane
17. DELETED
18. bis(2-chloroethyl) ether
19. 2-chloroethyl vinyl ether
20. 2-chloronaphthalene
21. 2,4,6-trichlorophenol
22. p-chloro-m-cresol
24. 2-chlorophenol
25. 1,2-dichlorobenzene
26. 1,3-dichlorobenzene
27. 1,4-dichlorobenzene
28. 3,3'-dichlorobenzidine
29. 1,1-dichloroethylene
30. 1,2-trans-dichloroethylene
31. 2,4-dichlorophenol
32. 1,2-dichloropropane
33. 1,3-dichloropropylene
34. 2,4-dimethylphenol
35. 2,4-dinitrotoluene
36. 2,6-dinitrotoluene
37. 1,2-diphenylhydrazine
38. ethylbenzene
39. fluoranthene
40. 4-chlorophenyl phenyl ether
41. 4-bromophenyl phenyl ether
42. bis(2-chloroisopropyl) ether
43. bis(2-chloroethoxy) methane

45. methyl chloride
46. methyl bromide
47. bromoform
48. dichlorobromomethane
49. DELETED
50. DELETED
51. chlorodibromomethane
52. hexachlorobutadiene
53. hexachlorocyclopentadiene
54. isophorone
55. naphthalene
56. nitrobenzene
57. 2-nitrophenol
58. 4-nitrophenol
59. 2,4-dinitrophenol
60. 4,6-dinitro-o-cresol
61. N-nitrosodimethylamine
62. N-nitrosodiphenylamine
63. N-nitrosodi-n-propylamine
64. pentachlorophenol
65. phenol
66. bis(2-ethylhexyl) phthalate
67. butyl benzyl phthalate
68. di-n-butyl phthalate
69. di-n-octyl phthalate
70. diethyl phthalate
71. dimethyl phthalate
72. benzo(a)anthracene
73. benzo(a)pyrene
74. benzo(b)fluoranthene
75. benzo(k)fluoranthene
76. chrysene
77. acenaphthylene
78. anthracene (a)
79. benzo(ghi)perylene
80. fluorene
81. phenanthrene (a)
82. dibenzo(a,h)anthracene
83. indeno(1,2,3-c,d)pyrene
84. pyrene
85. tetrachloroethylene
86. touene
87. trichloroethylene
88. vinyl chloride
89. aldrin
91. chlordane
95. alpha-endosulfan
96. endosulfan sulfate
98. endrin
103. beta-BHC
105. delta-BHC

113. toxaphene
116. asbestos
129. 2,3,7,8-tetrachlorodibenzo-p-dioxin

(a) Reported together

Pollutants Never Found Above Their Analytical Quantification Level. The toxic pollutants listed below were never found above their analytical quantification level in any samples from this wastewater stream; therefore, they were not selected for consideration in establishing regulations for this wastewater stream.

23. chloroform
90. dieldrin
92. 4,4'-DDT
93. 4,4'-DDE
94. 4,4'-DDD
96. beta-endosulfan
99. endrin aldehyde
100. heptachlor
101. heptachlor epoxide
102. alpha-BHC
104. gamma-BHC
106. PCB-1242 (a)
107. PCB-1254 (a)
108. PCB-1221 (a)
109. PCB-1232 (b)
110. PCB-1248 (b)
111. PCB-1260 (b)
112. PCB-1016 (b)
114. antimony
115. arsenic
117. beryllium
118. cadmium
119. chromium
121. cyanide
122. lead
124. nickel
125. selenium
126. silver
127. thallium
128. zinc

(a),(b) Reported together

Pollutants Detected Below Levels Achievable By Treatment. The toxic pollutants listed below were found above their analytical quantification level only at a concentration below the concentration considered achievable by specific available treatment

methods; therefore, they were not selected for consideration in establishing regulations for this wastewater stream. The pollutants are individually discussed following the list.

44. methylene chloride
120. copper
123. mercury

Methylene chloride was reported present at 0.014 mg/l in the single sample collected. The observed value is less than both the concentration observed in the source water (0.220 mg/l), and the level considered achievable by specific available treatment methods (0.1 mg/l).

Copper was measured at a concentration of 0.010 mg/l in the single sample collected. The observed copper concentration is less than both the copper concentration observed in the source water (0.020 mg/l), and the copper concentration considered achievable by specific available treatment methods (0.39 mg/l).

Mercury was reported at a concentration of 0.0003 mg/l in the one sample collected. The observed wastewater mercury concentration is less than both the concentration observed in the source water (0.0004 mg/l), and the concentration considered achievable by specific available treatment methods (0.036 mg/l).

Pollutants Selected for Consideration in Establishing Regulations for the Cleaning or Etching Scrubber Liquor Waste Stream. No pollutants were selected for consideration in establishing regulations for this wastewater stream.

Degassing Scrubber Liquor

Pollutants Never Detected. The toxic pollutants listed below were not detected in any samples from this wastewater stream; therefore, they were not selected for consideration in establishing regulations for this wastewater stream.

1. acenaphthene
2. acrolein
3. acrylonitrile
4. benzene
5. benzidine
6. carbon tetrachloride
7. chlorobenzene
8. 1,2,4-trichlorobenzene
9. hexachlorobenzene
10. 1,2-dichloroethane
12. hexachloroethane
13. 1,1-dichloroethane

15. 1,1,2,2-tetrachloroethane
16. chloroethane
17. DELETED
18. bis(2-chloroethyl) ether
19. 2-chloroethyl vinyl ether
20. 2-chloronaphthalene
21. 2,4,6-trichlorophenol
22. p-chloro-m-cresol
24. 2-chlorophenol
25. 1,2-dichlorobenzene
26. 1,3-dichlorobenzene
27. 1,4-dichlorobenzene
28. 3,3'-dichlorobenzidine
29. 1,1-dichloroethylene
30. 1,2-trans-dichloroethylene
31. 2,4-dichlorophenol
32. 1,2-dichloropropane
33. 1,3-dichloropropylene
34. 2.4-dimethylphenol
35. 2,4-dinitrotoluene
36. 2,6-dinitrotoluene
37. 1,2-diphenylhydrazine
38. ethylbenzene
39. fluoranthene
40. 4-chlorophenyl phenyl ether
41. 4-bromophenyl phenyl ether
42. bis(2-chlorisopropyl) ether
43. bis(2-chloroethoxy) methane
45. methyl chloride
46. methyl bromide
47. bromoform
49. DELETED
50. DELETED
52. hexachlorobutadiene
53. hexachlorocyclopentadiene
54. isophorone
55. naphthalene
56. nitrobenzene
58. 4-nitrophenol
59. 2,4-dinitrophenol
60. 4,6-dinitro-o-cresol
61. N-nitrosodimethylamine
62 N-nitrosodiphenylamine
63. N-nitrosodi-n-propylamine
64. pentachlorophenol
67. butyl benzyl phthalate
69. di-n-octyl phthalate
70. diethyl phthalate
71. dimethyl phthalate
72. benzo(a)anthracene

73. benzo(a)pyrene
74. benzo(b)fluoranthene
75. benzo(k)fluoranthene
76. chrysene
77. acenaphthylene
78. anthracene (a)
79. benzo(ghi)perylene
80. fluorene
81. phenathrene,(a)
82. dibenzo(a,h)anthracene
83. indeno(1,2,3-c,d)pyrene
84. pyrene
85. tetrachloroethylene
86. toluene
88. vinyl chloride
89. aldrin
90. dieldrin
91. chlordane
92. 4,4'-DDT
93. 4,4'-DDE
94. 4,4'DDD
95. alpha-endosulfan
96. beta-endosulfan
97. endosulfan sulfate
98. endrin
99. endrin aldehyde
100. heptachlor
101. heptachlor epoxide
102. alpha-BHC
103. beta-BHC
104. gamma-BHC
105. delta-BHC
106. PCB-1242 (b)
107. PCB-1254 (b)
108. PCB-1221 (b)
109. PCB-1232 (c)
110. PCB-1248 (c)
111. PCB-1260 (c)
112. PCB-1016 (c)
113. toxaphene
116. asbestos
129. 2,3,7,8 tetrachlorodibenzo-p-dioxin

(a), (b), (c) Reported together

Pollutants Never Found Above Their Analytical Quantification Level. The toxic pollutants listed below were never found above their analytical quantification level in any samples from this wastewater stream; therefore, they were not selected for consideration in establishing regulations.

11. 1,1,1-trichloroethane
14. 1,1,2-trichloroethane
44. methylene chloride
48. dichlorobromomethane
51. chlorodibromomethane
65. phenol
66. bis(2-ethylhexyl) phthalate
68. di-n-butyl phthalate
87. trichloroethylene
114. antimony
115. arsenic
117. beryllium
121. cyanide
123. mercury
125. selenium
126. silver
127. thallium

Pollutants Detected Below Levels Achievable By Treatment. The toxic pollutants listed below were found above their analytical quantification level only at a concentration below the concentration considered achievable by specific available treatment methods; therefore, they were not selected for consideration in establishing regulations for this wastewater stream. The pollutants are individually discussed following the list.

23. chloroform
118. cadmium
119. chromium
120. copper
124. nickel

Chloroform was found above its analytical quantification level in one of three samples; the measured concentration was 0.020 mg/l. The observed value is below the level of 0.1 mg/l that is considered achievable by specific available treatment methods.

Cadmium was found above its analytical quantification level in three samples. The maximum measured value was 0.011 mg/l, which is below the level of 0.049 mg/l that is considered achievable by specific available treatment methods.

Chromium was measured above its analytical quantification level in all three samples. The maximum concentration was 0.009 mg/l. The level considered achievable by specific available treatment methods is 0.07 mg/l; only one of the samples was above that level.

Copper was found above its analytical quantification level in all three samples. The maximum measured value was 0.250 mg/l, which

is below the level of 0.39 mg/l that is considered achievable by specific available treatment methods.

Nickel was found above its analytical quantification level in two of three samples. The maximum measured value was 0.023 mg/l, which is below the level of 0.22 mg/l that is considered achievable by specific available treatment methods.

Pollutants Selected For Consideration In Establishing Regulations For The Degassing Scrubber Liquor Waste Stream. The toxic pollutants listed below are those not eliminated from consideration for any of the reasons listed above; therefore, each was selected for consideration in establishing regulations for this wastewater stream. The pollutants are individually discussed following the list.

122. lead
128. zinc

Lead was measured above its analytical quantification level in all three samples; the observed concentrations were 0.019, 0.09 and 0.45 mg/l. The level considered achievable by specific available treatment methods for lead is 0.08 mg/l.

Zinc was measured at concentrations above its analytical quantification level in all three samples collected from this wastewater stream. The concentrations of zinc observed were 0.13, 0.22, and 1.3 mg/l. The proposed water quality criterion for zinc is 0.047 mg/l. A level of zinc of 0.23 mg/l is considered achievable by specific available treatment methods.

Table VI-1

LIST OF 129 TOXIC POLLUTANTS

Compound Name

1. acenaphthene
2. acrolein
3. acrylonitrile
4. benzene
5. benzidene
6. carbon tetrachloride (tetrachloromethane)

Chlorinated benzenes (other than dichlorobenzenes)

7. chlorobenzene
8. 1,2,4-trichlorobenzene
9. hexachlorobenzene

Chlorinated ethanes (including 1,2-dichloroethane. 1,1,1-trichloroethane and hexachloroethane)

10. 1.2-dichloroethane
11. 1,1,1-trichlorethane
12. hexachlorethane
13. 1,1-dichloroethane
14. 1,1,2-trichloroethane
15. 1,1,2,2-tetrachloroethane
16. chloroethane

Chloroalkyl ethers (chloromethyl, chloroethyl and mixed ethers)

17. bis (chloromethyl) ether
18. bis (2-chloroethyl) ether
19. 2-chloroethyl vinyl ether (mixed)

Chlorinated naphthalene

20. 2-chloronaphthalene

Table VI-1 (Continued)

LIST OF 129 TOXIC POLLUTANTS

Chlorinated phenols (other than those listed elsewhere; includes trichlorophenols and chlorinated cresols)

21. 2,4,6-trichlorophenol
22. parachlorometa cresol
23. chloroform (trichloromethane)
24. 2-chlorophenol

Dichlorobenzenes

25. 1,2-dichlorobenzene
26. 1,3-dichlorobenzene
27. 1,4-dichlorobenzene

Dichlorobenzidine

28. 3,3'-dichlorobenzidine

Dichloroethylenes (1,1-dichloroethylene and 1,2-dichloroethylene)

29. 1,1-dichloroethylene
30. 1,2-trans-dichloroethylene
31. 2,4-dichlorophenol

Dichloropropane and dichloropropene

32. 1,2-dichloropropane
33. 1,2-dichloropropylene (1,3-dichloropropene)
34. 2,4-dimethylphenol

Dinitrotoluene

35. 2,4-dinitrotoluene
36. 2,6-dinitrotoluene
37. 1,2-diphenylhydrazine
38. ethylbenzene
39. fluoranthene

Table VI-1 (Continued)

LIST OF 129 TOXIC POLLUTANTS

Haloethers (other than those listed elsewhere)

40. 4-chlorophenyl phenyl ether
41. 4-bromophenyl phenyl ether
42. bis(2-chloroisopropyl) ether
43. bis(2-choroethoxy) methane

Halomethanes (other than those listed elsewhere)

44. methylene chloride (dichloromethane)
45. methyl chloride (chloromethane)
46. methyl bromide (bromomethane)
47. bromoform (tribromomethane)
48. dichlorobromomethane
49. trichlorofluoromethane
50. dichlorodifluoromethane
51. chlorodibromomethane
52. hexachlorobutadiene
53. hexachlorocyclopentadiene
54. isophorone
55. naphthalene
56. nitrobenzene

Nitrophenols (including 2,4-dinitrophenol and dinitrocresol)

57. 2-nitrophenol
58. 4-nitrophenol
59. 2,4-dinitrophenol
60. 4,6-dinitro-o-cresol

Nitrosamines

61. N-nitrosodimethylamine
62. N-nitrosodiphenylamine
63. N-nitrosodi-n-propylamine
64. pentachlorophenol
65. phenol

Table VI-1 (Continued)

LIST OF 129 TOXIC POLLUTANTS

Phthalate esters

66. bis(2-ethylhexyl) phthalate
67. butyl benzyl phthalate
68. di-n-butyl phthalate
69. di-n-octyl phthalate
70. diethyl phthalate
71. dimethyl phthalate

Polynuclear aromatic hydrocarbons

72. benzo (a)anthracene (1,2-benzanthracene)
73. benzo (a)pyrene (3,4-benzopyrene)
74. 3,4-benzofluoranthene
75. benzo(k)fluoranthane (11,12-benzofluoranthene)
76. chrysene
77. acenaphthylene
78. anthracene
79. benzo(ghi)perylene (1,11-benzoperylene)
80. fluorene
81. phenanthrene
82. dibenzo (a,h)anthracene (1,2,5,6-dibenzanthracene)
83. indeno (1,2,3-cd)pyrene (w,e,-o-phenylenepyrene)
84. pyrene
85. tetrachloroethylene
86. toluene
87. trichloroethylene
88. vinyl chloride (chloroethylene)

Pesticides and metabolites

89. aldrin
90. dieldrin
91. chlordane (technical mixture and metabolites)

DDT and metabolites

92. 4,4'-DDT
93. 4,4'-DDE(p,p'DDX)
94. 4,4'-DDD(p,p'TDE)

Table VI-1 (Continued)

LIST OF 129 TOXIC POLLUTANTS

Polychlorinated biphenyls (PCB's)

Endosulfan and metabolites

95. a-endosulfan-Alpha
96. b-endosulfan-Beta
97. endosulfan sulfate

Endrin and metabolites

98. endrin
99. endrin aldehyde

Heptachlor and metabolies

100. heptachlor
101. heptachlor epoxide

Hexachlorocyclohexane (all isomers)

102. a-BHC-Alpha
103. b-BHC-Beta
104. r-BHC (lindane)-Gamma
105. g-BHC-Delta
106. PCB-1242 (Arochlor 1242)
107. PCB-1254 (Arochlor 1254)
108. PCB-1221 (Arochlor 1221)
109. PCB-1232 (Arochlor 1232)
110. PCB-1248 (Arochlor 1248)
111. PCB-1260 (Arochlor 1260)
112. PCB-1016 (Arochlor 1016)

Metals and Cyanide, and Asbestos

114. antimony
115. arsenic
116. asbestos (Fibrous)
117. beryllium
118. cadmium
119. chromium (Total)
120. copper
121. cyanide (Total)

Table VI-1 (Continued)

LIST OF 129 TOXIC POLLUTANTS

Metals and Cyanide, and Asbestos (Cont.)

122. lead
123. mercury
124. nickel
125. selenium
126. silver
127. thallium
128. zinc

Other

113. toxaphene
129. 2,3,7,8-tetra chlorodibenzo-p-dioxin (TCDD)

SECTION VII

CONTROL AND TREATMENT TECHNOLOGY

This section describes the treatment techniques currently used or available to remove or recover wastewater pollutants normally generated by the aluminum forming industrial point source category. Included are discussions of individual end-of-pipe treatment technologies and in-plant technologies. These treatment technologies are widely used in many industrial categories and data and information to support their effectiveness has been drawn from a similarly wide range of sources and data bases.

END-OF-PIPE TREATMENT TECHNOLOGIES

Individual recovery and treatment technologies are described which are used or are suitable for use in treating wastewater discharges from aluminum forming facilities. Each description includes a functional description and discussions of application and performance, advantages and limitations, operational factors (reliability, maintainability, solid waste aspects), and demonstration status. The treatment processes described include both technologies presently demonstrated within the aluminum forming category, and technologies demonstrated in treatment of similar wastes in other industries.

Aluminum forming wastewater streams characteristically contain significant levels of toxic inorganics. Cadmium, chromium, copper, cyanide, lead, nickel, selenium, and zinc are found in aluminum forming wastewater streams at substantial concentrations. These toxic inorganic pollutants constitute the most significant wastewater pollutants in this category.

In general, these pollutants are removed by oil removal (skimming, emulsion breaking, and flotation), chemical precipitation and sedimentation, or filtration. Most of them may be effectively removed by precipitation of metal hydroxides or carbonates utilizing the reaction with lime, sodium hydroxide, or sodium carbonate. For some, improved removals are provided by the use of sodium sulfide or ferrous sulfide to precipitate the pollutants as sulfide compounds with very low solubilities.

Discussion of end-of-pipe treatment technologies is divided into three parts: the major technologies; the effectiveness of major technologies; and minor end-of-pipe technologies.

MAJOR TECHNOLOGIES

In Sections IX, X, XI, and XII, the rationale for selecting treatment systems is discussed. The individual technologies used in the system are described here. The major end-of-pipe technologies are: chemical reduction of hexavalent chromium, chemical precipitation of dissolved metals, cyanide precipitation, granular bed filtration, pressure filtration settling of suspended solids, skimming of oil, chemical emulsion breaking, and thermal emulsion breaking. In practice, precipitation of metals and settling of the resulting precipitates is often a unified two-step operation. Suspended solids originally present in raw wastewaters are not appreciably affected by the precipitation operation and are removed with the precipitated metals in the settling operations. Settling operations can be evaluated independently of hydroxide or other chemical precipitation operations, but hydroxide and other chemical precipitation operations can only be evaluated in combination with a solids removal operation.

Chemical Reduction of Chromium

Description of the Process. Reduction is a chemical reaction in which electrons are transferred to the chemical being reduced from the chemical initiating the transfer (the reducing agent). Sulfur dioxide, sodium bisulfite, sodium metabisulfite, and ferrous sulfate form strong reducing agents in aqueous solution and are often used in industrial waste treatment facilities for the reduction of hexavalent chromium to the trivalent form. The reduction allows removal of chromium from solution in conjunction with other metallic salts by alkaline precipitation. Hexavalent chromium is not precipitated as the hydroxide.

Gaseous sulfur dioxide is a widely used reducing agent and provides a good example of the chemical reduction process. Reduction using other reagents is chemically similar. The reactions involved may be illustrated as follows:

$$3SO_2 + 3H_2O \longrightarrow 3H_2SO_3$$

$$3H_2SO_3 + 2H_2CrO_4 \longrightarrow Cr_2(SO_4)_3 + 5H_2O$$

The above reactions are favored by low pH. A pH of from 2 to 3 is normal for situations requiring complete reduction. At pH levels above 5, the reduction rate is slow. Oxidizing agents such as dissolved oxygen and ferric iron interfere with the reduction process by consuming the reducing agent.

A typical treatment consists of 45 minutes retention in a reaction tank. The reaction tank has an electronic recorder-controller device to control process conditions with respect to

pH and oxidation-reduction potential (ORP). Gaseous sulfur dioxide is metered to the reaction tank to maintain the ORP within the range of 250 to 300 millivolts. Sulfuric acid is added to maintain a pH level of from 1.8 to 2.0. The reaction tank is equipped with a propeller agitator designed to provide approximately one turnover per minute. Figure VII-1 shows a continuous chromium reduction system.

Application and Performance. Chromium reduction is used in aluminum forming for treating rinses of chromic acid etching solutions used for high-magnesium aluminum. Cooling tower blowdown may also contain chromium as a biocide in waste streams. Electroplating and coil coating operations, frequently found on-site with aluminum forming operations, are sometimes a source of chromium-bearing wastewaters. A study of an operational waste treatment facility chemically reducing hexavalent chromium has shown that a 99.7 percent reduction efficiency is easily achieved. Reduction followed by chemical precipitation can achieve final concentrations of 0.05 mg/l, and concentrations of 0.01 mg/l are considered to be attainable by properly maintained and operated equipment.

Advantages and Limitations. The major advantage of chemical reduction to reduce hexavalent chromium is that it is a fully proven technology based on many years of experience. Operation at ambient conditions results in low energy consumption, and the process, especially when using sulfur dioxide, is well suited to automatic control. Furthermore, the equipment is readily obtainable from many suppliers, and operation is straightforward.

One limitation of chemical reduction of hexavalent chromium is that for high concentrations of chromium, the cost of treatment chemicals may be prohibitive. When this situation occurs, other treatment techniques are likely to be more economical. Chemical interference by oxidizing agents is possible in the treatment of mixed wastes, and the treatment itself may introduce pollutants if not properly controlled. Storage and handling of sulfur dioxide is somewhat hazardous.

Operational Factors. Reliability: Maintenance consists of periodic removal of sludge, the frequency of which is a function of the input concentrations of detrimental constituents.

Solid Waste Aspects: Pretreatment to eliminate substances which will interfere with the process may often be necessary. This process produces trivalent chromium which can be controlled by further treatment. There may, however, be small amounts of sludge collected due to minor shifts in the solubility of the contaminants. This sludge can be processed by the main sludge treatment equipment.

Demonstration Status. The reduction of chromium waste by sulfur dioxide or sodium bisulfite is a classic process and is used by numerous plants which have hexavalent chromium compounds in wastewaters from operations such as electroplating and coil coating. Two aluminum forming plants report the use of chromium reduction to treat non-aluminum forming wastewaters.

Chemical Precipitation

Dissolved toxic metal ions and certain anions may be chemically precipitated for removal by physical means such as sedimentation, filtration, or centrifugation. Several reagents are commonly used to effect this precipitation.

1. Alkaline compounds such as lime or sodium hydroxide may be used to precipitate many toxic metal ions as metal hydroxides. Lime also may precipitate phosphates as insoluble calcium phosphate and fluorides as calcium fluoride.

2. Both "soluble" sulfides such as hydrogen sulfide or sodium sulfide and "insoluble" sulfides such as ferrous sulfide may be used to precipitate many heavy metal ions as insoluble metal sulfides.

3. Ferrous sulfate, zinc sulfate, or both (as is required) may be used to precipitate cyanide as a ferro or zinc ferricyanide complex.

4. Carbonate precipitates may be used to remove metals either by direct precipitation using a carbonate reagent such as calcium carbonate or by converting hydroxides into carbonates using carbon dioxide.

These treatment chemicals may be added to a flash mixer or rapid mix tank, to a presettling tank, or directly to a clarifier or other settling device. Because metal hydroxides tend to be colloidal in nature, coagulating agents may also be added to facilitate settling. After the solids have been removed, final pH adjustment may be required to reduce the high pH created by the alkaline treatment chemicals.

Chemical precipitation as a mechanism for removing metals from wastewater is a complex process of at least two steps - precipitation of the unwanted metals and removal of the precipitate. Some small amount of metal will remain dissolved in the wastewater after complete precipitation. The amount of residual dissolved metal depends on the treatment chemicals used and related factors. The effectiveness of this method of removing any specific metal depends on the fraction of the specific metal

in the raw waste (and hence in the precipitate) and the effectiveness of suspended solids removal. In specific instances, a sacrificial ion such as iron or aluminum may be added to aid in the precipitation process and reduce the fraction of a specific metal in the precipitate.

Application and Performance. Chemical precipitation is used in aluminum forming for precipitation of dissolved metals. It can be used to remove metal ions such as aluminum, antimony, arsenic, beryllium, cadmium, chromium, cobalt, copper, iron, lead, manganese, mercury, molybdenum, tin, and zinc. The process is also applicable to any substance that can be transformed into an insoluble form such as fluorides, phosphates, soaps, sulfides, and others. Because it is simple and effective, chemical precipitation is extensively used for industrial waste treatment.

The performance of chemical precipitation depends on several variables. The most important factors affecting precipitation effectiveness are:

1. Maintenance of an alklaine pH throughout the precipitation reaction and subsequent settling;

2. Addition of a sufficient excess of treatment ions to drive the precipitation reaction to completion;

3. Addition of an adequate supply of sacrificial ions (such as iron or aluminum) to ensure precipitation and removal of specific target ions; and

4. Effective removal of precipitated solids (see appropriate technologies discussed under "Solids Removal").

Control of pH. Irrespective of the solids removal technology employed, proper control of pH is absolutely essential for favorable performance of precipitation-sedimentation technologies. This is clearly illustrated by solubility curves for selected metals hydroxides and sulfides shown in Figure VII-2, and by plotting effluent zinc concentrations against pH as shown in Figure VII-3. Figure VII-3 was obtained from Development Document for the Proposed Effluent Limitations Guidelines and New Source Performance Standards for the Zinc Segment of Nonferrous Metals Manufacturing Point Source Category, U.S. E.P.A., EPA 440/1-74/033, November, 1974. Figure VII-3 was plotted from the sampling data from several facilities with metal finishing operations. It is partially illustrated by data obtained from three consecutive days of sampling at one metal processing plant (47432) as displayed in Table VII-1. Flow through this system is approximately 49,263 l/hr (13,000 gal/hr).

This treatment system uses lime precipitation (pH adjustment) followed by coagulant addition and sedimentation. Samples were taken before (in) and after (out) the treatment system. The best treatment for removal of copper and zinc was achieved on day one, when the pH was maintained at a satisfactory level. The poorest treatment was found on the second day, when the pH slipped to an unacceptably low level and intermediate values were achieved on the third day, when pH values were less than desirable but in between the first and second days.

Sodium hydroxide is used by one facility (plant 439) for pH adjustment and chemical precipitation, followed by settling (sedimentation and a polishing lagoon) of precipitated solids. Samples were taken prior to caustic addition and following the polishing lagoon. Flow through the system is approximately 22,700 l/hr (6,000 gal/hr). Metals removal data for this system are presented in Table VII-2.

These data indicate that the system was operated efficiently. Effluent pH was controlled within the range of 8.6 to 9.3, and while raw waste loadings were not unusually high, most toxic metals were removed to very low concentrations.

Lime and sodium hydroxide are sometimes used to precipitate metals. Data developed from plant 40063, a facility with a metal-bearing wastewater, exemplify efficient operation of a chemical precipitation and settling system. Table VII-3 shows sampling data from this system, which uses lime and sodium hydroxide for pH adjustment, chemical precipitation, polyelectrolyte flocculant addition, and sedimentation. Samples were taken of the raw waste influent to the system and of the clarifier effluent. Flow through the system is approximately 19,000 l/hr (5,000 gal/hr).

At this plant, effluent TSS levels were below 15 mg/l on each day, despite average raw waste TSS concentrations of over 3,500 mg/l. Effluent pH was maintained at approximately 8, lime addition was sufficient to precipitate the dissolved metal ions, and the flocculant addition and clarifier retention served to remove effectively the precipitated solids.

Sulfide precipitation is sometimes used to precipitate metals resulting in improved metals removals. Most metal sulfides are less soluble than hydroxides and the precipitates are frequently more effectively removed from water. Solubilities for selected metal hydroxide, carbonate, and sulfide precipitates are shown in Table VII-4 (Source: Lange's Handbook of Chemistry). Sulfide precipitation is particularly effective in removing specific metals such as silver and mercury. Sampling data from three industrial plants using sulfide precipitation appear in Table VII-5. The data were obtained from three sources:

1. Summary Report, Control and Treatment Technology for the Metal Finishing Industry: Sulfide Precipitation, USEPA, EPA No. 625/8/80-003, 1979.

2. Industry Finishing, Vol. 35, No. 11, November, 1979.

3. Electroplating sampling data from plant 27045.

In all cases except iron, effluent concentrations are below 0.1 mg/l and in many cases below 0.04 mg/l for the three plants studied.

Sampling data from several chlorine-caustic manufacturing plants using sulfide precipitation demonstrate effluent mercury concentrations varying between 0.009 and 0.03 mg/l. As shown in Figure VII-2, the solubilities of PbS and Ag_2S are lower at alkaline pH levels than either the corresponding hydroxides or other sulfide compounds. This implies that removal performance for lead and silver sulfides should be comparable to or better than that for the heavy metal hydroxides. Bench scale tests on several types of metal finishing and manufacturing wastewater indicate that metals removal to levels of less than 0.05 mg/l and in some cases less than 0.01 mg/l are common in systems using sulfide precipitation followed by clarification. Some of the bench scale data, particularly in the case of lead, do not support such low effluent concentrations. However, lead is consistently removed to very low levels (less than 0.02 mg/l) in systems using hydroxide and carbonate precipitation and sedimentation.

Of particular interest is the ability of sulfide to precipitate hexavalent chromium (Cr+6) without prior reduction to the trivalent state as is required in the hydroxide process. When ferrous sulfide is used as the precipitant, iron and sulfide act as reducing agents for the hexavalent chromium according to the reaction:

$$CrO_3 + FeS + 3H_2O \longrightarrow Fe(OH)_3 + Cr(OH)_3 + S$$

The sludge produced in this reaction consists mainly of ferric hydroxides, chromic hydroxides, and various metallic sulfides. Some excess hydroxyl ions are generated in this process, possibly requiring a downward readjustment of pH.

Based on the available data, Table VII-6 shows the minimum reliably attainable effluent concentrations for sulfide precipitation-sedimentation systems. These values are used to calculate performance predictions of sulfide precipitation-sedimentation systems. Table VII-6 is based on two reports:

1. Summary Report, Control and Treatment Technology for the Metal Finishing Industry: Sulfide Precipitation, USEPA, EPA No. 625/8/80-003, 1979.

2. Addendum to Development Document for Effluent Limitations Guidelines and New Source Performance Standards, Major Inorganic Products Segment of Inorganics Point Source Category, USEPA., EPA Contract No. EPA/68-01-3281 (Task 7), June, 1978.

Carbonate precipitation is sometimes used to precipitate metals, especially where precipitated metals values are to be recovered. The solubility of most metal carbonates is intermediate between hydroxide and sulfide solubilities; in addition, carbonates form easily filtered precipitates.

Carbonate ions appear to be particularly useful in precipitating lead and antimony. Sodium carbonate has been observed being added at treatment to improve lead precipitation and removal in some industrial plants. The lead hydroxide and lead carbonate solubility curves displayed in Figure VII-4 ("Heavy Metals Removal," by Kenneth Lanovette, Chemical Engineering/Deskbook Issue, Oct. 17, 1977) explain this phenomenon.

Co-precipitation with Iron - The presence of substantial quantities of iron in metal-bearing wastewaters before treatment has been shown to improve the removal of toxic metals. In some cases this iron is an integral part of the industrial wastewater; in other cases iron is deliberately added as a preliminary or first step of treatment. The iron functions to improve toxic metal removal by three mechanisms: the iron co-precipitates with toxic metals forming a stable precipitate which desolubilizes the toxic metal; the iron improves the settleability of the precipitate; and the large amount of iron reduces the fraction of toxic metal in the precipitate. Co-precipitation with iron has been practiced for many years incidentally when iron was a substantial constituent of raw wastewater and intentionally when iron salts were added as a coagulant aid. Aluminum or mixed iron-aluminum salt also have been used.

Co-precipitation using large amounts of ferrous iron salts is known as ferrite co-precipitation because magnetic iron oxide or ferrite is formed. The addition of ferrous salts (sulfate) is followed by alkali precipitation and air oxidation. The resultant precipitate is easily removed by filtration and may be removed magnetically. Data illustrating the performance of ferrite co-precipitation is shown in Table VII-7. The data are from:

1. Sources and Treatment of Wastewater in the Nonferrous Metals Industry, USEPA, EPA No. 600/2-80-074, 1980.

Advantages and Limitations

Chemical precipitation has proven to be an effective technique for removing many pollutants from industrial wastewater. It operates at ambient conditions and is well suited to automatic control. The use of chemical precipitation may be limited because of interference by chelating agents, because of possible chemical interference of mixed wastewaters and treatment chemicals, or because of the potentially hazardous situation involved with the storage and handling of those chemicals. Lime is usually added as a slurry when used in hydroxide precipitation. The slurry must be kept well mixed and the addition lines periodically checked to prevent blocking of the lines, which may result from a buildup of solids. Also, hydroxide precipitation usually makes recovery of the precipitated metals difficult, because of the heterogeneous nature of most hydroxide sludges.

The major advantage of the sulfide precipitation process is that the extremely low solubility of most metal sulfides promotes very high metal removal efficiencies; the sulfide process also has the ability to remove chromates and dichromates without preliminary reduction of the chromium to its trivalent state. In addition, sulfide can precipitate metals complexed with most complexing agents. The process demands care; however, in maintaining the pH of the solution at approximately 10 in order to prevent the generation of toxic hydrogen sulfide gas. For this reason, ventilation of the treatment tanks may be a necessary precaution in most installations. The use of insoluble sulfides reduces the problem of hydrogen sulfide evolution. As with hydroxide precipitation, excess sulfide ion must be present to drive the precipitation reaction to completion. Since the sulfide ion itself is toxic, sulfide addition must be carefully controlled to maximize heavy metals precipitation with a minimum of excess sulfide to avoid the necessity of post treatment. At very high excess sulfide levels and high pH, soluble mercury-sulfide compounds may also be formed. Where excess sulfide is present, aeration of the effluent stream can aid in oxidizing residual sulfide to the less harmful sodium sulfate (Na_2SO_4). The cost of sulfide precipitants is high in comparison with hydroxide precipitants, and disposal of metallic sulfide sludges may pose problems. An essential element in effective sulfide precipitation is the removal of precipitated solids from the wastewater and proper disposal in an appropriate site. Sulfide precipitation will also generate a higher volume of sludge than hydroxide precipitation, resulting in higher disposal and dewatering costs. This is especially true when ferrous sulfide is used as the precipitant.

Sulfide precipitation may be used as a polishing treatment after hydroxide precipitation-sedimentation. This treatment configuration may provide the better treatment effectiveness of sulfide

precipitation while minimizing the variability caused by changes in raw waste and reducing the amount of sulfide precipitant required.

Operational Factors. Reliability: Alkaline chemical precipitation is highly reliable, although proper monitoring and control are required. Sulfide precipitation systems provide similar reliability.

Maintainability: The major maintenance needs involve periodic upkeep of monitoring equipment, automatic feeding equipment, mixing equipment, and other hardware. Removal of accumulated sludge is necessary for efficient operation of precipitation-sedimentation systems.

Solid Waste Aspects: Solids which precipitate out are removed in a subsequent treatment step. Ultimately, these solids require proper disposal.

Demonstration Status. Chemical precipitation of metal hydroxides is a classic waste treatment technology used by most industrial waste treatment systems. Chemical precipitation of metals in the carbonate form alone has been found to be feasible and is commercially used to permit metals recovery and water reuse. Full scale commercial sulfide precipitation units are in operation at numerous installations. As noted earlier, sedimentation to remove precipitates is discussed separately.

Cyanide Precipitation

Cyanide precipitation, although a method for treating cyanide in wastewaters, does not destroy cyanide. The cyanide is retained in the sludge that is formed. Reports indicate that during exposure to sunlight the cyanide complexes can break down and form free cyanide. For this reason the sludge from this treatment method must be disposed of carefully.

Cyanide may be precipitated and settled out of wastewaters by the addition of zinc sulfate or ferrous sulfate. In the presence of iron, cyanide will form extremely stable cyanide complexes. The addition of zinc sulfate or ferrous sulfate forms zinc ferrocyanide or ferro and ferricyanide complexes.

Adequate removal of the precipitated cyanide requires that the pH must be kept at 9.0 and an appropriate detention time be maintained. A study has shown that the formation of the complex is very dependent on pH. At pH's of 8 and 10 the residual cyanide concentrations measured are twice those of the same reaction carried out at a pH of 9. Removal efficiencies also depend heavily on the retention time allowed. The formation of the complexes

takes place rather slowly. Depending upon the excess amount of zinc sulfate or ferrous sulfate added, at least a 30 minute retention time should be allowed for the formation of the cyanide complex before continuing on to the clarification stage.

One experiment with an initial concentration of 10 mg/l of cyanide showed that 98 percent of the cyanide was complexed 10 minutes after the addition of ferrous sulfate at twice the theoretical amount necessary. Interference from other metal ions, such as cadmium, might result in the need for longer retention times.

Table VII-8 presents data from three coil coating plants. Plant 1057 also does aluminum forming. A fourth plant was visited for the purpose of observing plant testing of the cyanide precipitation system. Specific data from this facility are not included because: (1) the pH was usually well below the optimum level of 9.0; (2) the historical treatment data were not obtained using the standard cyanide analysis procedure; and (3) matched input-output data were not made available by the plant. Scanning the available data indicates that the raw waste CN level was in the range of 25.0; the pH 7.5; and treated CN level was from 0.1 to 0.2.

The concentrations are those of the stream entering and leaving the treatment system. Plant 1057 allowed a 27 minute retention time for the formation of the complex. The retention time for the other plants is not known. The data suggest that over a wide range of cyanide concentration in the raw waste, the concentration of cyanide can be reduced in the effluent stream to under 0.15 mg/l.

Application and Performance. Cyanide precipitation can be used when cyanide destruction is not feasible because of the presence of cyanide complexes which are difficult to destroy. Effluent concentrations of cyanide well below 0.15 mg/l are possible.

Advantages and Limitations. Cyanide precipitation is an inexpensive method of treating cyanide. Problems may occur when metal ions interfere with the formation of the complexes.

Demonstration Status. Although no plants currently use cyanide precipitation to treat aluminum forming wastewaters, it is used in at least six coil coating plants, two of which have both aluminum forming and aluminum coil coating operations.

Granular Bed Filtration

Filtration occurs in nature as the surface ground waters are cleansed by sand. Silica sand, anthracite coal, and garnet are

common filter media used in water treatment plants. These are usually supported by gravel. The media may be used singly or in combination. The multi-media filters may be arranged to maintain relatively distinct layers by virtue of balancing the forces of gravity, flow, and buoyancy on the individual particles. This is accomplished by selecting appropriate filter flow rates (gpm/sq-ft), media grain size, and density.

Granular bed filters may be classified in terms of filtration rate, filter media, flow pattern, or method of pressurization. Traditional rate classifications are slow sand, rapid sand, and high rate mixed media. In the slow sand filter, flux or hydraulic loading is relatively low, and removal of collected solids to clean the filter is therefore relatively infrequent. The filter is often cleaned by scraping off the inlet face (top) of the sand bed. In the higher rate filters, cleaning is frequent and is accomplished by a periodic backwash, opposite to the direction of normal flow.

A filter may use a single medium such as sand or diatomaceous earth (Figure VII-5a), but dual (Figure VII-5d) and mixed (multiple) media (Figure VII-5e) filters allow higher flow rates and efficiencies. The dual media filter usually consists of a fine bed of sand under a coarser bed of anthracite coal. The coarse coal removes most of the influent solids, while the fine sand performs a polishing function. At the end of the backwash, the fine sand settles to the bottom because it is denser than the coal, and the filter is ready for normal operation. The mixed media filter operates on the same principle, with the finer, denser media at the bottom and the coarser, less dense media at the top. The usual arrangement is garnet at the bottom (outlet end) of the bed, sand in the middle, and anthracite coal at the top. Some mixing of these layers occurs and is, in fact, desirable.

The flow pattern is usually top-to-bottom, but other patterns are sometimes used. Upflow filters (Figure VII-5b) are sometimes used, and in a horizontal filter the flow is horizontal. In a biflow filter (Figure VII-5c), the influent enters both the top and the bottom and exits laterally. The advantage of an upflow filter is that with an upflow backwash the particles of a single filter medium are distributed and maintained in the desired coarse-to-fine (bottom-to-top) arrangement. The disadvantage is that the bed tends to become fluidized, which lowers filtration efficiency. The biflow design is an attempt to overcome this problem.

The classic granular bed filter operates by gravity flow; however, pressure filters are fairly widely used. They permit higher solids loadings before cleaning and are advantageous when the filter effluent must be pressurized for further downstream treatment. In addition, pressure filter systems are often less costly for low to moderate flow rates.

Figure VII-6 depicts a high rate, dual media, gravity downflow granular bed filter, with self-stored backwash. Both filtrate and backwash are piped around the bed in an arrangement that permits gravity upflow of the backwash, with the stored filtrate serving as backwash. Addition of the indicated coagulant and polyelectrolyte usually results in a substantial improvement in filter performance.

Auxiliary filter cleaning is sometimes employed in the upper few inches of filter beds. This is conventionally referred to as surface wash and is accomplished by water jets just below the surface of the expanded bed during the backwash cycle. These jets enhance the scouring action in the bed by increasing the agitation.

An important feature for successful filtration and backwashing is the underdrain. This is the support structure for the bed. The underdrain provides an area for collection of the filtered water without clogging from either the filtered solids or the media grains. In addition, the underdrain prevents loss of the media with the water, and during the backwash cycle it provides even flow distribution over the bed. Failure to dissipate the velocity head during the filter or backwash cycle will result in bed upset and the need for major repairs.

Several standard approaches are employed for filter underdrains. The simplest one consists of a parallel porous pipe imbedded under a layer of coarse gravel and manifolded to a header pipe for effluent removal. Other approaches to the underdrain system are known as the Leopold and Wheeler filter bottoms. Both of these incorporate false concrete bottoms with specific porosity configurations to provide drainage and velocity head dissipation.

Filter system operation may be manual or automatic. The filter backwash cycle may be on a timed basis, a pressure drop basis with a terminal value which triggers backwash, or a solids carryover basis from turbidity monitoring of the outlet stream. All of these schemes have been used successfully.

Application and Performance. Wastewater treatment plants often use granular bed filters for polishing after clarification, sedimentation, or other similar operations. Granular bed filtration thus has potential application to nearly all industrial plants.

Chemical additives which enhance the upstream treatment equipment may or may not be compatible with or enhance the filtration process. Normal operation flow rates for various types of filters are as follows:

Slow Sand	2.04 - 5.30 l/sq m-hr
Rapid Sand	40.74 - 51.48 l/sq m-hr
High Rate Mixed Media	81.48 - 122.22 l/sq m-hr

Suspended solids are commonly removed from wastewater streams by filtering through a deep 0.3 to 0.9 m (1 to 3 feet) granular filter bed. The porous bed formed by the granular media can be designed to remove practically all suspended particles. Even colloidal suspensions (roughly 1 to 100 microns) are adsorbed on the surface of the media grains as they pass in close proximity in the narrow bed passages.

Properly operated filters following some preliminary treatment to reduce suspended solids below 200 mg/l should produce water with less than 10 mg/l TSS. For example, multimedia filters produced the effluent qualities shown in Table VII-9.

Advantages and Limitations. The principal advantages of granular bed filtration are its comparatively (to other filters) low initial and operating costs, reduced land requirements over other methods to achieve the same level of solids removal, and elimination of chemical additions to the discharge stream. However, the filter may require preliminary treatment if the solids level is high (over 100 mg/l). Operator training must be somewhat extensive due to the controls and periodic backwashing involved, and backwash must be stored and dewatered for economical disposal.

Operational Factors. Reliability: The recent improvements in filter technology have significantly improved filtration reliability. Control systems, improved designs, and good operating procedures have made filtration a highly reliable method of water treatment.

Maintainability: Deep bed filters may be operated with either manual or automatic backwash. In either case, they must be periodically inspected for media attrition, partial plugging, and leakage. Where backwashing is not used, collected solids must be removed by shoveling, and filter media must be at least partially replaced.

Solid Waste Aspects: Filter backwash is generally recycled within the wastewater treatment system, so that the solids ultimately appear in the clarifier sludge stream for subsequent dewatering. Alternatively, the backwash stream may be dewatered directly or, if there is no backwash, the collected solids may be

disposed of in a suitable landfill. In either of these situations there is a solids disposal problem similar to that of clarifiers.

Demonstration Status. Deep bed filters are in common use in municipal treatment plants. Their use in polishing industrial clarifier effluent is increasing, and the technology is proven and conventional. Granular bed filtration is used in many manufacturing plants. As noted previously, however, little data is available characterizing the effectiveness of filters presently in use within the aluminum forming industry.

Pressure Filtration

Pressure filtration works by pumping the liquid through a filter material which is impenetrable to the solid phase. The positive pressure exerted by the feed pumps or other mechanical means provides the pressure differential which is the principal driving force. Figure VII-7 represents the operation of one type of pressure filter.

A typical pressure filtration unit consists of a number of plates or trays which are held rigidly in a frame to ensure alignment and which are pressed together between a fixed end and a traveling end. On the surface of each plate is mounted a filter made of cloth or a synthetic fiber. The feed stream is pumped into the unit and passes through holes in the trays along the length of the press until the cavities or chambers between the trays are completely filled. The solids are then entrapped, and a cake begins to form on the surface of the filter material. The water passes through the fibers, and the solids are retained.

At the bottom of the trays are drainage ports. The filtrate is collected and discharged to a common drain. As the filter medium becomes coated with sludge, the flow of filtrate through the filter drops sharply, indicating that the capacity of the filter has been exhausted. The unit must then be cleaned of the sludge. After the cleaning or replacement of the filter media, the unit is again ready for operation.

Application and Performance. Pressure filtration is used in aluminum forming for sludge dewatering and also for direct removal of precipitated and other suspended solids from wastewater.

Because dewatering is such a common operation in treatment systems, pressure filtration is a technique which can be found in many industries concerned with removing solids from their waste stream.

In a typical pressure filter, chemically preconditioned sludge detained in the unit for one to three hours under pressures varying from 5 to 13 atmospheres exhibited a final dry solids content between 25 and 50 percent.

Advantages and Limitations. The pressures which may be applied to a sludge for removal of water by filter presses that are currently available range from 5 to 13 atmospheres. As a result, pressure filtration may reduce the amount of chemical pretreatment required for sludge dewatering. Sludge retained in the form of the filter cake has a higher percentage of solids than that from a centrifuge or vacuum filter. Thus, it can be easily accommodated by materials handling systems.

As a primary solids removal technique, pressure filtration requires less space than clarification and is well suited to streams with high solids loadings. The sludge produced may be disposed of without further dewatering. The amount of sludge is increased by the use of filter precoat materials (usually diatomaceous earth). Also, cloth pressure filters often do not achieve as high a degree of effluent clarification as clarifiers or granular media filters.

Two disadvantages associated with pressure filtration in the past have been the short life of the filter cloths and lack of automation. New synthetic fibers have largely offset the first of these problems. Also, units with automatic feeding and pressing cycles are now available.

For larger operations, the relatively high space requirements, as compared to those of a centrifuge, could be prohibitive in some situations.

Operational Factors. Reliability: With proper pretreatment, design, and control, pressure filtration is a highly dependable system.

Maintainability: Maintenance consists of periodic cleaning or replacement of the filter media, drainage grids, drainage piping, filter pans, and other parts of the system. If the removal of the sludge cake is not automated, additional time is required for this operation.

Solid Waste Aspects: Because it is generally drier than other types of sludges, the filter sludge cake can be handled with relative ease. The accumulated sludge may be disposed by any of the accepted procedures depending on its chemical composition. The levels of toxic metals present in sludge from treating aluminum forming wastewater necessitate proper disposal.

Demonstration Status. Pressure filtration is a commonly used technology in many commercial applications. One aluminum forming plant uses pressure filtration for sludge dewatering.

Settling

Settling is a process which removes solid particles from a liquid matrix by gravitational force. This is done by reducing the velocity of the feed stream in a large volume tank or lagoon so that gravitational settling can occur. Figure VII-8 shows two typical settling devices.

Settling is often preceded by chemical precipitation which converts dissolved pollutants to solid form and by coagulation which enhances settling by coagulating suspended precipitates into larger, faster settling particles.

If no chemical pretreatment is used, the wastewater is fed into a tank or lagoon where it loses velocity and the suspended solids are allowed to settle out. Long retention times are generally required. Accumulated sludge can be collected either periodically or continuously and either manually or mechanically. Simple settling, however, may require excessively large catchments, and long retention times (days as compared with hours) to achieve high removal efficiencies. Because of this, addition of settling aids such as alum or polymeric flocculants is often economically attractive.

In practice, chemical precipitation often precedes settling, and inorganic coagulants or polyelectrolytic flocculants are usually added as well. Common coagulants include sodium sulfate, sodium aluminate, ferrous or ferric sulfate, and ferric chloride. Organic polyelectrolytes vary in structure, but all usually form larger floc particles than coagulants used alone.

Following this pretreatment, the wastewater can be fed into a holding tank or lagoon for settling, but is more often piped into a clarifier for the same purpose. A clarifier reduces space requirements, reduces retention time, and increases solids removal efficiency. Conventional clarifiers generally consist of a circular or rectangular tank with a mechanical sludge collecting device or with a sloping funnel-shaped bottom designed for sludge collection. In advanced settling devices, inclined plates, slanted tubes, or a lamellar network may be included within the clarifier tank in order to increase the effective settling area, increasing capacity. A fraction of the sludge stream is often recirculated to the inlet, promoting formation of a denser sludge.

Application and Performance. Settling and clarification are used in the aluminum forming category to remove precipitated metals. Settling can be used to remove most suspended solids in a particular waste stream; thus it is used extensively by many different industrial waste treatment facilities. Because most metal ion pollutants are readily converted to solid metal hydroxide precipitates, settling is of particular use in those industries associated with metal production, metal finishing, metal working, and any other industry with high concentrations of metal ions in their wastewaters. In addition to toxic metals, suitably precipitated materials effectively removed by settling include aluminum, iron, manganese, cobalt, antimony, beryllium, molybdenum, fluoride, phosphate, and many others.

A properly operated settling system can efficiently remove suspended solids, precipitated metal hydroxides, and other impurities from wastewater. The performance of the process depends on a variety of factors, including the density and particle size of the solids, the effective charge on the suspended particles, and the types of chemicals used in pretreatment. The site of flocculant or coagulant addition also may significantly influence the effectiveness of clarification. If the flocculant is subjected to too much mixing before entering the clarifier, the complexes may be sheared and the settling effectiveness diminished. At the same time, the flocculant must have sufficient mixing and reaction time in order for effective set-up and settling to occur. Plant personel have observed that the line or trough leading into the clarifier is often the most efficient site for flocculant addition. The performance of simple settling is a function of the retention time, particle size and density, and the surface area of the basin.

The data displayed in Table VII-10 indicate suspended solids removal efficiencies in settling systems.

The mean effluent TSS concentration obtained by the plants shown in Table VII-10 is 10.1 mg/l. Influent concentrations averaged 838 mg/l. The maximum effluent TSS value reported is 23 mg/l. These plants all use alkaline pH adjustment to precipitate metal hydroxides, and most add a coagulant or flocculant prior to settling.

Advantages and Limitations. The major advantage of simple settling is its simplicity as demonstrated by the gravitational settling of solid particular waste in a holding tank or lagoon. The major problem with simple settling is the long retention time necessary to achieve an acceptable effluent, especially if the specific gravity of the suspended matter is close to that of water. Some materials cannot be effectively removed by simple settling alone.

Settling performed in a clarifier is effective in removing slow-settling suspended matter in a shorter time and in less space than a simple settling system. Also, effluent quality is often better from a clarifier. The cost of installing and maintaining a clarifier; however, is substantially greater than the costs associated with simple settling.

Inclined plate, slant tube, and lamellar settlers have even higher removal efficiencies than conventional clarifiers, and greater capacities per unit area are possible. Installed costs for these advanced clarification systems are claimed to be one half the cost of conventional systems of similar capacity.

Operational Factors. Reliability: Settling can be a highly reliable technology for removing suspended solids. Sufficient retention time and regular sludge removal are important factors affecting the reliability of all settling systems. Proper control of pH adjustment, chemical precipitation, and coagulant or flocculant addition are additional factors affecting settling efficiencies in systems (frequently clarifiers) where these methods are used.

Those advanced settlers using slanted tubes, inclined plates, or a lamellar network may require prescreening of the waste in order to eliminate any fibrous materials which could potentially clog the system. Some installations are especially vulnerable to shock loadings, as by storm water runoff, but proper system design will prevent this.

Maintainability: When clarifiers or other advanced settling devices are used, the associated system utilized for chemical pretreatment and sludge dragout must be maintained on a regular basis. Routine maintenance of mechanical parts is also necessary. Lagoons require little maintenance other than periodic sludge removal.

Demonstration Status

Settling represents the typical method of solids removal and is employed extensively in industrial waste treatment. The advanced clarifiers are just beginning to appear in significant numbers in commercial applications. Twenty-nine aluminum forming plants use sedimentation or clarification.

Skimming

Pollutants with a specific gravity less than water will often float unassisted to the surface of the wastewater. Skimming removes these floating wastes. Skimming normally takes place in a tank designed to allow the floating material to rise and remain

on the surface, while the liquid flows to an outlet located below the floating layer. Skimming devices are therefore suited to the removal of non-emulsified oils from raw waste streams. Common skimming mechanisms include the rotating drum type, which picks up oil from the surface of the water as it rotates. A doctor blade scrapes oil from the drum and collects it in a trough for disposal or reuse. The water portion is allowed to flow under the rotating drum. Occasionally, an underflow baffle is installed after the drum; this has the advantage of retaining any floating oil which escapes the drum skimmer. The belt type skimmer is pulled vertically through the water, collecting oil which is scraped off from the surface and collected in a drum. Gravity separators (Figure VII-9), such as the API type, utilize overflow and underflow baffles to skim a floating oil layer from the surface of the wastewater. An overflow-underflow baffle allows a small amount of wastewater (the oil portion) to flow over into a trough for disposition or reuse while the majority of the water flows underneath the baffle. This is followed by an overflow baffle, which is set at a height relative to the first baffle such that only the oil bearing portion will flow over the first baffle during normal plant operation. A diffusion device, such as a vertical slot baffle, aids in creating a uniform flow through the system and increasing oil removal efficiency.

Application and Performance. Skimming is applicable to any waste stream containing pollutants which float to the surface. It is commonly used to remove free oil, grease, and soaps. Skimming is often used in conjunction with air flotation or clarification in order to increase its effectiveness.

The removal efficiency of a skimmer is partly a function of the retention time of the water in the tank. Larger, more buoyant particles require less retention time than smaller particles. Thus, the efficiency also depends on the composition of the waste stream. The retention time required to allow phase separation and subsequent skimming varies from 1 to 15 minues, depending on the wastewater characteristics.

API or other gravity-type separators tend to be more suitable for use where the amount of surface oil flowing through the system is continuous and substantial. Drum and belt type skimmers are applicable to waste streams which evidence smaller amounts of floating oil and where surges of floating oil are not a problem. Using an API separator system in conjunction with a drum type skimmer would be a very effective method of removing floating contaminants from non-emulsified oily waste streams. Sampling data shown in Table VII-11 illustrate the capabilities of the technology with both extremely high and moderate oil influent levels.

This data is intended to be illustrative of the very high level of oil and grease removals attainable in a simple two stage oil removal system. Based on the performance of installations in a variety of manufacturing plants and permit requirements that are constantly achieved, it is determined that effluent oil levels may be reliably reduced below 10 mg/l with moderate influent concentrations. Very high concentrations of oil such as the 22 percent shown in Table VII-11 may require two step treatment to achieve this level.

Skimming which removes oil may also be used to remove base levels of organics. Plant sampling data show that many organic compounds tend to be removed in standard wastewater treatment equipment. Oil separation not only removes oil but also organics that are more soluble in oil than in water. Clarification removes organic solids directly and probably removes dissolved organics by adsorption on inorganic solids.

The source of these organic pollutants is not always known with certainty, although in metal forming operations they seem to derive mainly from various process lubricants. They are also sometimes present in the plant water supply, as additives to proprietary formulations of cleaners, or due to leaching from plastic liners and other materials.

High molecular weight organics in particular are much more soluble in organic solvents than in water. Thus they are much more concentrated in the oil phase that is skimmed than in the wastewater. The ratio of solubilities of a compound in oil and water phases is called the partition coefficient. The logarithm of the partition coefficients for 15 polynuclear aromatic hydrocarbon (PAH) compounds in octanol and water are:

PAH Priority Pollutant		Log Octanol/Water Partition Coefficient
1.	Acenaphthene	4.33
30.	Fluoranthene	5.33
72.	Benzo(a)anthracene	5.61
73.	Benzo(a)pyrene	6.04
74.	3,4-Benzofluoranthene	6.57
75.	Benzo(k)fluoranthene	6.84
76.	Chrysene	5.61
77.	Acenaphthylene	4.07
78.	Anthracene	4.45
79.	Benzo(ghi)perylene	7.23
80.	Fluorene	4.18
81.	Phenanthrene	4.46
82.	Dibenzo(a,h)anthracene	5.97
83.	Indeno(1,2,3,cd)pyrene	7.66
84.	Pyrene	5.32

A study of toxic organic compounds commonly found in metal forming operations waste streams indicated that incidental removal of these compounds often occurs as a result of oil removal or clarification processes. When all organics analyses from visited plants are considered, removal of organic compounds by other waste treatment technologies often appears to be marginal in most cases. When only raw waste concentrations of 0.05 mg/l or greater are considered, incidental organics removal becomes much more apparent. Lower values, those less than 0.05 mg/l, are more subject to analytical variation, while higher values indicate a significant presence of a given compound. When these factors are taken into account, the data indicate that most clarification and oil removal treatment systems remove significant amounts of the organic compounds present in the raw waste. The API oil-water separation system performed notably in this regard, as shown in Table VII-12.

The unit operation most applicable to removal of trace toxic organics is adsorption, and chemical oxidation is another possibility. Biological degradation is not generally applicable because the organics are not present in sufficient concentration to sustain a biomass and because most of the organics are resistant to biodegradation.

Advantages and Limitations. Skimming as a pretreatment is effective in removing naturally floating waste material. It also improves the performance of subsequent downstream treatments.

Many pollutants, particularly dispersed or emulsified oil, will not float "naturally" but require additional treatments. Therefore, skimming alone may not remove all the pollutants capable of being removed by air flotation or other more sophisticated technologies.

Operational Factors. Reliability: Because of its simplicity, skimming is a very reliable technique.

Maintainability: The skimming mechanism requires periodic lubrication, adjustment, and replacement of worn parts.

Solid Waste Aspects: The collected layer of debris must be disposed of by contractor removal, landfill, or incineration. Because relatively large quantities of water are present in the collected wastes, incineration is not always a viable disposal method.

Demonstration Status. Skimming is a common operation utilized extensively by industrial waste treatment systems.

Chemical Emulsion Breaking

Chemical treatment is often used to break stable oil-in-water (O-W) emulsions. An O-W emulsion consists of oil dispersed in water, stabilized by electrical charges and emulsifying agents. A stable emulsion will not separate or break down without some form of treatment.

Once an emulsion is broken, the difference in specific gravities allows the oil to float to the surface of the water. Solids usually form a layer between the oil and water, since some oil is retained in the solids. The longer the retention time, the more complete and distinct the separation between the oil, solids, and water will be. Often other methods of gravity differential separation, such as air flotation or rotational separation (e.g., centrifugation), are used to enhance and speed separation. A schematic flow diagram of one type of application is shown in Figure VII-10.

The major equipment required for chemical emulsion breaking includes: reaction chambers with agitators, chemical storage tanks, chemical feed systems, pumps, and piping.

Emulsifiers may be used in the plant to aid in stabilizing or forming emulsions. Emulsifiers are surface-active agents which alter the characteristics of the oil and water interface. These sufactants have rather long polar molecules. One end of the molecule is particularly soluble in water (e.g., carboxyl, sulfate, hydroxyl, or sulfonate groups) and the other end is readily soluble in oils (an organic group which varies greatly with the different surfactant type). Thus, the surfactant emulsifies or suspends the organic material (oil) in water. Emulsifiers also lower the surface tension of the O-W emulsion as a result of solvation and ionic complexing. These emulsions must be destabilized in the treatment system.

Application and Performance. Emulsion breaking is applicable to waste streams containing emulsified oils or lubricants such as rolling and drawing emulsions.

Treatment of spent O-W emulsions involves the use of chemicals to break the emulsion followed by gravity differential separation. Factors to be considered for breaking emulsions are type of chemicals, dosage and sequence of addition, pH, mechanical shear and agitation, heat, and retention time.

Chemicals, e.g., polymers, alum, ferric chloride, and organic emulsion breakers, break emulsions by neutralizing repulsive charges between particles, precipitating or salting out emulsifying agents, or altering the interfacial film between the

oil and water so it is readily broken. Reactive cations, e.g., H(+1), Al(+3), Fe(+3), and cationic polymers, are particularly effective in breaking dilute O-W emulsions. Once the charges have been neutralized or the interfacial film broken, the small oil droplets and suspended solids wil be adsorbed on the surface of the floc that is formed, or break out and float to the top. Various types of emulsion-breaking chemicals are used for the various types of oils.

If more than one chemical is required, the sequence of addition can make quite a difference in both breaking efficiency and chemical dosages.

pH plays an important role in emulsion breaking, especially if cationic inorganic chemicals, such as alum, are used as coagulants. A depressed pH in the range of 2 to 4 keeps the aluminum ion in its most positive state where it can function most effectively for charge neutralization. After some of the oil is broken free and skimmed, raising the pH into the 6 to 8 range with lime or caustic will cause the aluminum to hydrolyze and precipitate as aluminum hydroxide. This floc entraps or adsorbs destabilized oil droplets which can then be separated from the water phase. Cationic polymers can break emulsions over a wider pH range and thus avoid acid corrosion and the additional sludge generated from neutralization; however, an inorganic flocculant is usually required to supplement the polymer emulsion breaker's adsorptive properties.

Mixing is important in breaking O-W emulsions. Proper chemical feed and dispersion is required for effective results. Mixing also causes collisions which help break the emulsion, and subsequently helps to agglomerate droplets.

In all emulsions, the mix of two immiscible liquids has a specific gravity very close to that of water. Heating lowers the viscosity and increases the apparent specific gravity differential between oil and water. Heating also increases the frequency of droplet collisions, which helps to rupture the interfacial film.

Oil and grease and suspended solids performance data are shown in Table VII-13. Data were obtained from sampling at operating plants and a review of the current literature. This type of treatment is proven to be reliable and is considered the current state-of-the-art for aluminum forming emulsified oily wastewaters.

Advantages and Limitations. Advantages gained from the use of chemicals for breaking O-W emulsions are the high removal efficiency potential and the possibility of reclaiming the oily

waste. Disadvantages are corrosion problems associated with acid-alum systems, skilled operator requirements for batch treatment, chemical sludges produced, and poor cost-effectiveness for low oil concentrations.

Operational Factors. Reliability: Chemical emulsion breaking is a very reliable process. The main control parameters, pH and temperature, are fairly easy to control.

Maintainability: Maintenance is required on pumps, motors, and valves, as well as periodic cleaning of the treatment tank to remove any accumulated solids. Energy use is limited to mixers and pumps.

Solid Waste Aspects: The surface oil and oily sludge produced are usually hauled away by a licensed contractor. If the recovered oil has a sufficiently low percentage of water, it may be burned for its fuel value or processed and reused.

Demonstration Status. Sixteen plants in the aluminum forming category currently break emulsions with chemicals. Eight plants chemically break spent rolling oil emulsions with chemicals, one plant breaks its rolling and drawing emulsions, one plant breaks its rolling oils and degreasing solvent, one plant breaks its direct chill casting contact cooling water, scrubber liquor, and sawing oil, and one plant breaks its direct chill casting contact cooling water and extrusion press heat treatment contact cooling water.

Thermal Emulsion Breaking

Dispersed oil droplets in a spent emulsion can be destabilized by the application of heat to the waste. One type of technology commonly used in the metals and mechanical products industries is the evaporation-decantation-condensation process, also called thermal emulsion breaking (TEB), which separates the emulsion waste into distilled water, oils and other floating materials, and sludge. Raw waste is fed to a main reaction chamber. Warm air is passed over a large revolving drum which is partially submerged in the waste. Some water evaporates from the surface of the drum and is carried upward through a filter and a condensing unit. The condensed water is discharged or reused as process makeup, while the air is reheated and returned to the evaporation stage. As the water evaporates in the main chamber, oil concentration increases. This enhances agglomeration and gravity separation of oils. The separated oils and other floating materials flow over a weir into a decanting chamber. A rotating drum skimmer picks up oil from the surface of the decanting chamber and discharges it for possible reprocessing or contractor removal. Meanwhile, oily water is being drawn from the bottom of

the decanting chamber, reheated, and sent back into the main conveyorized chamber. Solids which settle out in the main chamber are removed by a conveyor belt. This conveyor belt, called a flight scraper, moves slowly so as not to interfere with the settling of suspended solids.

Application and Performance. Thermal emulsion breaking technology can be applied to the treatment of spent emulsions in the aluminum forming category.

The performance of a thermal emulsion breaker is dependent primarily on the characteristics of the raw waste and proper maintenance and functioning of the process components. Some emulsions may contain volatile compounds which could escape with the distilled water. In systems where the water is recycled back to process; however, this problem is essentially elminated. Experience in at least two copper forming plants has shown that trace organics or other contaminants found in the condensed water will not adversely affect the lubricants when this water is used for process emulsions. In one copper forming plant, typical oil and grease level in the condensed water was 1 mg/l.

Advantages and Limitations. Advantages of the thermal emulsion breaking process include high percentages of oil removal (at least 99 percent in most cases), the separation of floating oil from settleable sludge solids, and the production of distilled water which is available for process reuse. In addition, no chemicals are required and the operation is automated, factors which reduce operating costs. Disadvantages of the process are the energy requirement for water evaporation and, if intermittently operated, the necessary installation of a large storage tank.

Operational Factors. Reliability: Thermal emulsion breaking is a very reliable process for the treatment of emulsified oil wastes.

Maintainability: The thermal emulsion breaking process requires minimal routine maintenance of the process components, and periodic disposal of the sludge and oil.

Solid Waste Aspects: The thermal emulsion breaking process generates sludge which must be properly disposed of.

Demonstration Status. Thermal emulsion breaking is used in metals and mechanical products industries. It is a proven method of effectively treating emulsified wastes.

MAJOR TECHNOLOGY EFFECTIVENESS

The performance of individual treatment technologies was presented above. Performance of operating systems is discussed here. Two different systems are considerred: L&S (hydroxide precipitation and sedimentation or lime and settle) and LS&F (hydroxide precipitation, sedimentation, and filtration or lime, settle, and filter). Subsequently, an analysis of effectiveness of such systems is made to develop one-day maximum and ten-day and thirty-day average concentration levels to be used in regulating pollutants. Evaluation of the L&S and the LS&F systems is carried out on the assumption that chemical reduction of chromium, cyanide precipitation, oil skimming, and emulsion breaking are installed and operating properly where appropriate.

L&S Performance - Combined Metals Data Base

Before proposal, chemical analysis data were collected of raw waste (treatment influent) and treated waste (treatment effluent) from 55 plants (126 data days) sampled by EPA (or its contractor) using EPA sampling and chemical analysis protocols. These data are the data base for determining the effectiveness of L&S technology. Each of these plants belongs to at least one of the following industry categories: aluminum forming, battery manufacturing, coil coating, copper forming, electroplating and porcelain enameling. All of the plants employ pH adjustment and hydroxide precipitation using lime or caustic, followed by settling (tank, lagoon or clarifier) for solids removal. Most also add a coagulant or flocculant prior to solids removal.

An analysis of this data was presented in the development documents for the proposed regulations for coil coating and porcelain enameling (January 1981). In response to the proposal, some commenters claimed that it was inappropriate to use data from some categories for regulation of other categories. In response to these comments, the Agency reanalyzed the data. An analysis of variance was applied to the data for the 126 days of sampling to test the hypothesis of homogeneous plant mean raw and treated effluent levels across categories by pollutant. This analysis is described in the report, "A Statistical Analysis of the Combined Metals Industries Effluent Data" which is in the administrative record supporting this rulemaking. The main conclusion drawn from the analysis of variance is that, with the exception of electroplating, the categories are generally homogeneous with regard to mean pollutant concentrations in both raw and treated effluent. That is, when data from electroplating facilities are included in the analysis, the hypothesis of homogeneity across categories is rejected. When the electroplating data are removed from the analysis the conclusion changes substantially and the hypothesis of homogeneity across categories is not rejected. On

the basis of this analysis, the electroplating data were removed from the data base used to determine limitations. Cases that appeared to be marginally different were not unexpected (such as copper in copper forming and lead in lead battery manufacturing) and were accommodated in developing limitations by using the larger values obtained from the marginally different category to characterize the entire data set.

The statistical analysis provides support for the technical engineering judgement that electroplating wastewaters are different from most metal processing wastewater. These differences may be further explained by differences in the constituents and relative amounts of pollutants in the raw wastewaters. Therefore, the wastewater data derived from plants that only electroplate are not used in developing limitations for the aluminum forming category.

After removing the electroplating data, data from 21 plants and 52 days of sampling remained.

For the purpose of developing treatment effectiveness, certain additional data were deleted from the data base before examination for homogeneity. These deletions were made to ensure that the data reflect properly operated treatment systems and actual pollutant removal. The following criteria were used in making these deletions:

- Plants where malfunctioning processes or treatment systems at time of sampling were identified.

- Data days where pH was less than 7.0 or TSS was greater than 50 mg/l. (This is a prima facie indication of poor operation.)

- Data points where the raw value was too low to assure actual pollutant removal occurred (i.e., less than 0.1 mg/l of pollutant in raw waste).

Collectively, these selection criteria ensure that the data are from properly operating lime and settle treatment facilities. The remaining data are displayed graphically in Figures VII-11 to VII-19. This common or combined metals data base provides a more sound and usable basis for estimating treatment effectiveness and statistical variability of lime and settle technology than the available data from any one category.

One-Day Effluent Values

The basic assumption underlying the determination of treatment effectiveness is that the data for a particular pollutant are

lognormally distributed by plant. The lognormal has been found to provide a satisfactory fit to plant effluent data in a number of effluent guidelines categories. In the case of the combined metal categories data base, there are too few data from any one plant to verify formally the lognormal assumption. Thus, we assumed measurements of each pollutant from a particular plant, denoted by X, follow a lognormal distribution with a log mean μ and log variance σ^2. The mean, variance, and 99th percentile of X are then:

$$\text{mean of } X = E(X) = \exp(\mu + \sigma^2/2)$$

$$\text{variance of } X = V(X) = \exp(2\mu + \sigma^2)\,[\exp(\sigma^2) - 1]$$

$$\text{99th percentile} = X_{.99} = \exp(\mu + 2.33\sigma)$$

where exp is e, the base of the natural logarithm. The term lognormal is used because the logarithm of X has a normal distribution with mean μ and variance σ^2. Using the basic assumption of log normality the actual treatment effectiveness was determined using a lognormal distribution that, in a sense, approximates the distribution of an average of the plants in the data base, i.e., an "average plant" distribution. The notion of an "average plant" distribution is not a strict statistical concept but is used here to determine limits that would represent the performance capability of an average of the plants in the data base.

This "average plant" distribution for a particular pollutant was developed as follows: the log mean was determined by taking the average of all the observations for the pollutant across plants. The log variance was determined by the pooled within plant variance. This is the weighted average of the plant variances. Thus, the log mean represents the average of all the data for the pollutant and the log variance represents the average of the plant log variances or average plant variability for the pollutant.

The one-day effluent values were determined as follows:

Let X_{ij} = the jth observation on a particular pollutant at plant i where

$i = 1, \ldots, I$
$j = 1, \ldots, J_i$
I = total number of plants
j_i = number of observations at plant i.

Then $Y_{ij} = \ln X_{ij}$

where ln means the natural logarithm.

Then $\bar{y}$ = log mean over all plants

$$= \sum_{i=1}^{I} \sum_{j=1}^{J_i} y_{ij}/n$$

where n = total number of observations

$$= \sum_{i=1}^{I} J_i$$

and V(y) = pooled log variance

$$= \frac{\sum_{i=1}^{I} (J_i-1)S_i^2}{\sum_{i=1}^{I} (J_i-1)}$$

where S_i^2 = log variance at plant i

$$= \sum_{j=1}^{J_i} (y_{ij}-\bar{y}_i)^2/(J_i-1)$$

$\bar{y}_i$ = log mean at plant i.

Thus, $\bar{y}$ and V(y) are the log mean and log variance, respectively, of the lognormal distribution used to determine the treatment effectiveness. The estimated mean and 99th percentile of this distribution form the basis for the long term average and daily maximum effluent limitations, respectively. The estimates are

$$\text{mean} = \hat{E}(X) = \exp(\bar{y})\psi n(0.5V(y))$$

$$\text{99th percentile} = \hat{X}_{.99} = \exp[\bar{y} + 2.33\sqrt{V(y)}]$$

where $\psi(.)$ is a Bessel function and exp is e, the base of the natural logarithms (see Aitchison, J. and J. A. C. Brown, The Lognormal Distribution, Cambridge University Press, 1963). In cases where zeros were present in the data, a generalized form of the lognormal, known as the delta distribution was used (see Aitchison and Brown, op. cit., Chapter 9).

For certain pollutants, this approach was modified slightly to accommodate situations in which a category or categories stood out as being marginally different from the others. For instance, after excluding the electroplating data and other data that did

not reflect pollutant removal or proper treatment, the effluent copper data from the copper forming plants were statistically significantly greater than the copper data from the other plants. Thus, copper effluent values shown in Table VII-14 are based only on the copper effluent data from the copper forming plants. That is, the log mean for copper is the mean of the logs of all copper values from the copper forming plants only and the log variance is the pooled log variance of the copper forming plant data only. In the case of cadmium, after excluding the electroplating data and data that did not reflect removal or proper treatment, there were insufficient data to estimate the log variance for cadmium. The variance used to determine the values shown in Table VII-14 for cadmium was estimated by pooling the within plant variances for all the other metals. Thus, the cadmium variability is the average of the plant variability averaged over all the other metals. The log mean for cadmium is the mean of the logs of the cadmium observations only. A complete discussion of the data and calculations for all the metals is contained in the administrative record for this rulemaking.

Average Effluent Values

Average effluent values that form the basis for the monthly limitations were developed in a manner consistent with the method used to develop one-day treatment effectiveness in that the lognormal distribution used for the one-day effluent values was also used as the basis for the average values. That is, we assume a number of consecutive measurements are drawn from the distribution of daily measurements. The approach used for the 10 measurements values was employed previously for the electroplating category (see "Development Document for Existing Sources Pretreatment Standards for the Electroplating Point Source Category," EPA 440/1-79/003, U.S. Environmental Protection Agency, Washington, D.C., August, 1979). That is, the distribution of the average of 10 samples from a lognormal was approximated by another lognormal distribution. Although the approximation is not precise theoretically, there is empirical evidence based on effluent data from a number of categories that the lognormal is an adequate approximation for the distribution of small samples. In the course of previous work the approximation was verified in a computer simulation study. The average values were developed assuming independence of the observations although no particular sampling scheme was assumed.

Ten-Sample Average:

The formulas for the 10-sample limitations were derived on the basis of simple relationships between the mean and variance of the distributions of the daily pollutant measurements and the average of 10 measurements. We assume the daily concentration

measurements for a particular pollutant, denoted by X, follow a lognormal distribution with log mean and log variance denoted by μ and σ^2, respectively. Let $\bar{X}_{10}$ denote the mean of 10 consecutive measurements. The following relationships then hold assuming the daily measurements are independent:

$$\text{mean of } \bar{X}_{10} = E(\bar{X}_{10}) = E(X)$$

$$\text{variance of } \bar{X}_{10} = V(\bar{X}_{10}) = V(X) \div 10.$$

Where E(X) and V(X) are the mean and variance of X, respectively, defined above. We then assume that $\bar{X}_{10}$ follows a lognormal distribution with log mean μ_{10} and log standard deviation σ^2_{10}. The mean and variance of $\bar{X}_{10}$ are then

$$E(\bar{X}_{10}) = \exp(\mu_{10} + 0.5\sigma^2_{10})$$

$$V(\bar{X}_{10}) = \exp(2\mu_{10} + \sigma^2_{10})[\exp(\sigma^2_{10}) - 1]$$

Now, μ_{10} and σ^2_{10} can be derived in terms of μ and σ^2 as

$$\mu_{10} = \mu + \sigma^2/2 + 0.5\ln[1 + (\exp(\sigma^2 - 1)/N]$$

$$\sigma^2_{10} = \ln[1 + (\exp(\sigma^2) - 1)/N].$$

Therefore, μ_{10} and σ^2_{10} can be estimated using the above relationships and the estimates of μ and σ^2 obtained for the underlying lognormal distribution. The 10 sample limitation value was determined by the estimate of the approximate 99th percentile of the distribution of the 10 sample average given by

$$X_{10}(.99) = \exp(\hat{\mu}_{10} + 2.33\,\hat{\sigma}_{10})$$

where $\hat{\mu}_{10}$ and $\hat{\sigma}_{10}$ are the estimates of μ_{10} and σ_{10}, respectively.

30 Sample Average:

The average values based on 30 measurements are determined on the basis of a statistical result known as the Central Limit Theorem. This Theorem states that, under general and nonrestrictive assumptions, the distribution of a sum of a number of random variables, say n, is approximated by the normal distribution. The approximation improves as the number of variables, n, increases. The Theorem is quite general in that no particular distributional form is assumed for the distribution of the individual variables. In most applications (as in approximating the distribution of 30-day averages) the Theorem is used to approximate the distribution of the average of n observations of a random variable. The result makes it possible to compute

approximate probability statements about the average in a wide range of cases. For instance, it is possible to compute a value below which a specified percentage (e.g., 99 percent) of the averages of n observations are likely to fall. Most textbooks state that 25 or 30 observations are sufficient for the approximation to be valid. In applying the Theorem to the determination of 30 day average effluent values, we approximate the distribution of the average of 30 observations drawn from the distribution of daily measurements and use the estimated 99th percentile of this distribution. The monthly limitations based on 10 consecutive measurements were determined using the log-normal approximation described above because 10 measurements were, in this case, considered too small a number for use of the Central Limit Theorem.

30 Sample Average Calculation

The formulas for the 30 sample average were based on an application of the Central Limit Theorem. According to the Theorem, the average of 30 observations drawn from the distribution of daily measurements, denoted by $\bar{X}_{30}$, is approximately normally distributed. The mean and variance of $\bar{X}_{30}$ are

$$\text{mean of } \bar{X}_{30} = E(\bar{X}_{30}) = E(X)$$

$$\text{variance of } \bar{X}_{30} = V(\bar{X}_{30}) = V(X) \div 30.$$

The 30 sample average value was determined by the estimate of the approximate 99th percentile of the distribution of the 30 sample average given by

$$\hat{\bar{X}_{30}}(.99) = \hat{E}(X) + 2.33\sqrt{\hat{V}(X) \div 30}$$

where $\hat{E}(X) = \exp(\bar{y})\psi n(0.5V(y))$

and $\hat{V}(X) = \exp(2\bar{y})[\psi n(2V(y)) - \psi n\{(\frac{n-2}{n-1})V(y)\}]$.

The formulas for $\hat{E}(X)$ and $\hat{V}(X)$ are estimates of E(X) and V(X), respectively given in Aitchison, J. and J. A. C. Brown, The Lognormal Distribution, Cambridge University Press, 1963, page 45.

Application

In response to the proposed coil coating and porcelain enameling regulations, the Agency received comments pointing out that permits usually required less than 30 samples to be taken during a month while the monthly average used as the basis for permits and pretreatment requirements is based on the average of 30 samples.

In applying the treatment effectiveness values to regulations we have considered the comments, examined the sampling frequency required by many permits, and considered the change in values of averages depending on the number of consecutive sampling days in the averages. The most common frequency of sampling required in permits is about 10 samples per month or slightly greater than twice weekly. The 99th percentiles of the distribution of averages of 10 consecutive sampling days are not substantially different from the 99th percentile of the distribution's 30 day average. (Compared to the one-day maximum, the 10-day average is about 80 percent of the difference between one and 30-day values). Hence, the 10-day average provides a reasonable basis for a monthly average and is typical of the sampling frequency required by existing permits.

The monthly average is to be achieved in all permits and pretreatment standards regardless of the number of samples required to be analyzed and averaged by the permit or the pretreatment authority.

Additional Pollutants

A number of other pollutant parameters were considered with regard to the performance of lime and settle treatment systems in removing them from industrial wastewater. Performance data for these parameters is not readily available, so data available to the Agency in other categories has been selectively used to determine the long-term average performance of lime and settle technology for each pollutant. These data indicate that the concentrations shown in Table VII-15 are reliably attainable with hydroxide precipitation and settling. The precipitation of silver appears to be accomplished by alkaline chloride precipitation and adequate chloride ions must be available for this reaction to occur.

In establishing which data were suitable for use in Table VII-15 two factors were heavily weighed: (1) the nature of the wastewater; and (2) the range of pollutants or pollutant matrix in the raw wastewater. These data have been selected from processes that generate dissolved metals in the wastewater and which are generally free from complexing agents. The pollutant matrix was evaluated by comparing the concentrations of pollutants found in the raw wastewaters with the range of pollutants in the raw wastewaters of the combined metals data set. These data are displayed in Tables VII-16 and VII-17 and indicate that there is sufficient similarity in the raw wastes to logically assume transferability of the treated pollutant concentrations to the combined metals data base. The available data on these added pollutants do not allow homogeneity analysis as was performed on the combined metals data base. The data source for each added pollutant is discussed separately.

Antimony (Sb) - The achievable performance for antimony is based on data from a battery and secondary lead plant. Both EPA sampling data and recent permit data (1978 - 1982) confirm the achievability of 0.7 mg/l in the battery manufacturing wastewater matrix included in the combined data set.

Arsenic (As) - The achievable performance of 0.5 mg/l for arsenic is based on permit data from two nonferrous metals manufacturing plants. The untreated wastewater matrix shown in Table VII-17 is comparable with the combined data set matrix.

Beryllium (Be) - The treatability of beryllium is transferred from the nonferrous metals manufacturing industry. The 0.3 performance is achieved at a beryllium plant with the comparable untreated wastewater matrix shown in Table VII-17.

Mercury (Hg) - The 0.06 mg/l treatability of mercury is based on data from four battery plants. The untreated wastewater matrix at these plants was considered in the combined metals data set.

Selenium (Se) - The 0.30 mg/l treatability of selenium is based on recent permit data from one of the nonferrous metals manufacturing plants also used for antimony performance. The untreated wastewater matrix for this plant is shown in Table VII-17.

Silver (Ag) - The treatability of silver is based on a 0.1 mg/l treatability estimate from the inorganic chemicals industry. Additional data supporting a treatability as stringent or more stringent than 0.1 mg/l is also available from seven nonferrous metals manufacturing plants. The untreated wastewater matrix for these plants is comparable and summarized in Table VII-17.

Thallium (Th) - The 0.50 mg/l treatability for thallium is transferred from the inorganic chemicals industry. Although no untreated wastewater data are available to verify comparability with the combined metals data set plants, no other sources of data for thallium treatability could be identified.

Aluminum (Al) - The 1.11 mg/l treatability of aluminum is based on the mean performance of one aluminum forming plant and one coil coating plant. Both of the plants are from categories considered in the combined metals data set, assuring untreated wastewater matrix comparability.

Cobalt (Co) - The 0.05 mg/l treatability is based on nearly complete removal of cobalt at a porcelain enameling plant with a mean untreated wastewater cobalt concentration of 4.31 mg/l. In this case, the analytical detection using aspiration techniques for this pollutant is used as the basis of the treatability. Porcelain enameling was considered in the combined metals data base, assuring untreated wastewater matrix comparability.

Fluoride (F) - The 14.5 mg/l treatability of fluoride is based on the mean performance of an electronics and electrical component manufacturing plant. The untreated wastewater matrix for this plant shown in Table VII-17 is comparable to the combined metals data set.

LS&F Performance

Tables VII-18 and VII-19 show long-term data from two plants which have well operated precipitation-settling treatment followed by filtration. The wastewaters from both plants contain pollutants from metals processing and finishing operations (multi-category). Both plants reduce hexavalent chromium before neutralizing and precipitating metals with lime. A clarifier is used to remove much of the solids load and a filter is used to "polish" or complete removal of suspended solids. Plant A uses pressure filtration, while Plant B uses a rapid sand filter.

Raw waste data was collected only occasionally at each facility and the raw waste data is presented as an indication of the nature of the wastewater treated. Data from Plant A was received as a statistical summary and is presented as received. Raw laboratory data was collected at Plant B and reviewed for spurious points and discrepancies. The method of treating the data base is discussed below under lime, settle, and filter treatment effectiveness.

Table VII-20 shows long-term data for zinc and cadmium removal at Plant C, a primary zinc smelter, which operates a LS&F system. This data represents about four months (103 data days) taken immediately before the smelter was closed. It has been arranged similarily to Plants A and B for comparison and use.

These data are presented to demonstrate the performance of precipitation-settling-filtration (LS&F) technology under actual operating conditions and over a long period of time.

It should be noted that the iron content of the raw waste of plants A and B is high while that for Plant C is low. This results, for plants A and B, in co-precipitation of toxic metals with iron. Precipitation using high-calcium lime for pH control yields the results shown in Table VII-20. Plant operating personnel indicate that this chemical treatment combination (sometimes with polymer assisted coagulation) generally produces better and more consistent metals removal than other combinations of sacrificial metal ions and alkalis.

The LS&F performance data presented here are based on systems that provide polishing filtration after effective L&S treatment. As previously shown, L&S treatment is equally applicable to wastewaters from the five categories because of the homogeneity of its raw and treated wastewaters, and other factors. Because of the similarity of the wastewaters after L&S treatment, the Agency believes these wastewaters are equally amenable to treatment using polishing filters added to the L&S treatment system. The Agency concludes the LS&F data based on porcelain enameling and nonferrous smelting and refining is directly applicable to the aluminum forming, copper forming, battery manufacturing, coil coating, and metal molding and casting categories, as well as to the porcelain enameling and nonferrous smelting and refining.

Analysis of Treatment System Effectiveness

Data are presented in Table VII-14 showing the mean, one day, 10-day, and 30-day values for nine pollutants examined in the L&S metals data base. The mean variability factor for eight pollutants (excluding cadmium because of the small number of data points) was determined and is used to estimate one day, 10-day, and 30-day values. (The variability factor is the ratio of the value of concern to the mean: the average variability factors are: one day maximum - 4.100; ten-day average - 1.821; and 30-day average - 1.618.) For values not calculated from the common data base as previously discussed, the mean value for pollutants shown in Table VII-15 were multiplied by the variability factors to derive the value to obtain the one, ten- and 30-day values. These are tabulated in Table VII-21.

LS&F technology data are presented in Tables VII-18 and VII-19. These data represent two operating plants (A and B) in which the technology has been installed and operated for some years. Plant A data was received as a statistical summary and is presented without change. Plant B data was received as raw laboratory analysis data. Discussions with plant personnel indicated that operating experiments and changes in materials and reagents and occasional operating errors had occurred during the data collection period. No specific information was available on those variables. To sort out high values probably caused by methodological factors from random statistical variability, or data noise, the Plant B data were analyzed. For each of the four pollutants (chromium, nickel, zinc, and iron), the mean and standard deviation (sigma) were calculated for the entire data set. A data day was removed from the complete data set when any individual pollutant concentration for that day exceeded the sum of the mean plus three sigma for that pollutant. Fifty-one data days (from a total of about 1,300) were eliminated by this method.

Another approach was also used as a check on the above method of eliminating certain high values. The minimum values of raw wastewater concentrations from Plant B for the same four pollutants were compared to the total set of values for the corresponding pollutants. Any day on which the pollutant concentration exceeded the minimum value selected from raw wastewater concentrations for that pollutant was discarded. Forty-five days of data were eliminated by that procedure. Forty-three days of data in common were eliminated by either procedures. Since common engineering practice (mean plus 3 sigma) and logic (treated waste should be less than raw waste) seem to coincide, the data base with the 51 spurious data days eliminated is the basis for all further analysis. Range, mean, standard deviation and mean plus two standard deviations are shown in Tables VII-18 and VII-19 for Cr, Cu, Ni, Zn, and Fe.

The Plant B data were separated into 1979, 1978, and total data base (six years) segments. With the statistical analysis from Plant A for 1978 and 1979 this in effect created five data sets in which there is some overlap between the individual years and total data sets from Plant B. By comparing these five parts it is apparent that they are quite similar and all appear to be from the same family of numbers. The largest mean found among the five data sets for each pollutant was selected as the long-term mean for LS&F technology and is used as the LS&F mean in Table VII-21.

Plant C data were used as a basis for cadmium removal performance and as a check on the zinc values derived from plants A and B. The cadmium data is displayed in Table VII-20 and is incorporated into Table VII-21 for LS&F. The zinc data were analyzed for compliance with the one-day and 30-day values in Table VII-21; no zinc value of the 103 data points exceeded the one-day zinc value of 1.02 mg/l. The 103 data points were separated into blocks of 30 points and averaged. Each of the three full 30-day averages was less than the Table VII-21 value of 0.31 mg/l. Additionally, the Plant C raw wastewater pollutant concentrations (Table VII-20) are well within the range of raw wastewater concentrations of the combined metals data base (Table VII-16), further supporting the conclusion that Plant C wastewater data is compatible with similar data from plants A and B.

Concentration values for regulatory use are displayed in Table VII-21. Mean one-day, ten-day, and 30-day values for L&S for nine pollutants were taken from Table VII-14; the remaining L&S values were developed using the mean values in Table VII-15 and the mean variability factors discussed above.

LS&F mean values for Cd, Cr, Ni, Zn, and Fe are derived from plants A, B, and C as discussed above. One, ten, and 30-day values are derived by applying the variability factor developed from the pooled data base for the specific pollutant to the mean for that pollutant. Other LS&F values are calculated using the long-term average or mean and the appropriate variability factors. Mean values for LS&F for pollutants not already discussed are derived by reducing the L&S mean by one-third. The one-third reduction was established after examining the percent reduction in concentrations going from L&S to LS&F data for Cd, Cr, Ni, Zn, and Fe. The average reduction is 0.3338 or one-third.

Copper levels achieved at plants A and B may be lower than generally achievable because of the high iron content and low copper content of the raw wastewaters. Therefore, the mean concentration value achieved is not used; LS&F mean used is derived from the L&S technology.

L&S cyanide mean levels shown in Table VII-8 are ratioed to one-day, ten-day, and 30-day values using mean variability factors. LS&F mean cyanide is calculated by applying the ratios of removals for L&S and LS&F as discussed previously for LS&F metals limitations. The cyanide performance was arrived at by using the average metal variability factors. The treatment method used here is cyanide precipitation. Because cyanide precipitation is limited by the same physical processes as the metal precipitation, it is expected that the variabilities will be similar. Therefore, the average of the metal variability factors has been used as a basis for calculating the cyanide one-day, ten-day, and 30-day average treatment effectiveness values.

The filter performance for removing TSS as shown in Table VII-9 yields a mean effluent concentration of 2.61 mg/l and calculates to a ten-day average of 4.33, 30-day average of 3.36 mg/l; a one-day maximum of 8.88. These calculated values more than amply support the classic values of 10 and 15, respectively, which are used for LS&F.

Although iron was reduced in some LS&F operations, some facilities using that treatment introduce iron compounds to aid settling. Therefore, the one-day, ten-day, and 30-day values for iron at LS&F were held at the L&S level so as to not unduly penalize the operations which use the relatively less objectionable iron compounds to enhance removals of toxic metals.

MINOR TECHNOLOGIES

Several other treatment technologies were considered for possible application in BPT or BAT. These technologies are presented here with a full discussion for most of them. A few are described only briefly because of limited technical development.

Carbon Adsorption

The use of activated carbon to remove dissolved organics from water and wastewater is a long demonstrated technology. It is one of the most efficient organic removal processes available. This sorption process is reversible, allowing activated carbon to be regenerated for reuse by the application of heat and steam or solvent. Activated carbon has also proved to be an effective adsorbent for many toxic metals, including mercury. Regeneration of carbon which has adsorbed significant metals; however, may be difficult.

The term activated carbon applies to any amorphous form of carbon that has been specially treated to give high adsorption capacities. Typical raw materials include coal, wood, coconut shells, petroleum base residues, and char from sewage sludge pyrolysis. A carefully controlled process of dehydration, carbonization, and oxidation yields a product which is called activated carbon. This material has a high capacity for adsorption due primarily to the large surface area available for adsorption, 500 to 1,500 m^2/gm, resulting from a large number of internal pores. Pore sizes generally range from 10 to 100 angstroms in radius.

Activated carbon removes contaminants from water by the process of adsorption, or the attraction and accumulation of one substance on the surface of another. Activated carbon preferentially adsorbs organic compunds over other species and, because of this selectivity, is particularly effective in removing organic compounds from aqueous solution.

Carbon adsorption requires preliminary treatment to remove excess suspended solids, oils, and greases. Suspended solids in the influent should be less than 50 mg/l to minimize backwash requirements; a downflow carbon bed can handle much higher levels (up to 2,000 mg/l), but requires frequent backwashing. Backwashing more than two or three times a day is not desirable; at 50 mg/l suspended solids, one backwash will suffice. Oil and grease should be less than about 10 mg/l. A high level of dissolved inorganic material in the influent may cause problems with thermal carbon reactivation (i.e., scaling and loss of activity) unless appropriate preventive steps are taken. Such steps might include pH control, softening, or the use of an acid wash on the carbon prior to reactivation.

Activated carbon is available in both powdered and granular form. A flow diagram of activated carbon treatment and regeneration is shown in Figure VII-20. A schematic of an individual adsorption column is shown in Figure VII-21. Powdered carbon is less expensive per unit weight and may have slightly higher adsorption capacity, but it is more difficult to handle and to regenerate.

Application and Performance. Isotherm tests have indicated that activated carbon is very effective in adsorbing 65 percent of the toxic organic pollutants and is reasonably effective for another 22 percent. Specifically, activated carbon is very effective in removing 2,4-dimethylphenol, fluoranthene, isophorone, naphthalene, all phthalates, and phenanthrene. Activated carbon is reasonably effective on 1,1,1-trichloroethane, 1,1-dichloroethane, phenol, and toluene.

Table VII-22 summarizes the treatability effectiveness for most of the toxic organic pollutants by activated carbon as compiled by EPA. Table VII-23 summarizes classes of organic compounds together with samples of organics that are readily adsorbed on carbon. Table VII-24 lists the effectiveness of activated carbon in removing seven toxic organic pollutants from actual manufacturing process wastewater streams in the nonferrous metals industries and foundry industries that are very similar to aluminum forming wastewater streams.

Advantages and Limitations. The major benefits of carbon treatment include applicability to a wide variety of organics and high removal efficiency. Inorganics such as cyanide, chromium, and mercury are also removed effectively. Variations in concentration and flow rate are well tolerated. The system is compact, and recovery of adsorbed materials is sometimes practical. However, destruction of adsorbed compounds often occurs during thermal regeneration. If carbon cannot be thermally regenerated, it must be disposed of along with any adsorbed pollutants. The capital and operating costs of thermal regeneration are relatively high. Cost surveys show that thermal regeneration is generally economical when carbon usage exceeds about 1,000 lbs/day. Carbon cannot remove low molecular weight or highly soluble organics. It also has a low tolerance for suspended solids, which must be removed in most systems to at least 50 mg/l in the influent water.

Operational Factors. Reliability: This system should be very reliable with upstream protection and proper operation and maintenance procedures.

Maintainability: This system requires periodic regeneration or replacement of spent carbon and is dependent upon raw waste load and process efficiency.

Solid Waste Aspects: Solid waste from this process is contaminated activated carbon that requires disposal. Carbon that undergoes regeneration reduces the solid waste problem by reducing the frequency of carbon replacement.

Demonstration Status. Carbon adsorption systems have been demonstrated to be practical and economical in reducing COD, BOD, and related parameters in secondary municipal and industrial wastewaters; in removing toxic or refractory organics from isolated industrial wastewaters; in removing and recovering certain organics from wastewaters; and in the removing, and sometimes recovering, of selected inorganic chemicals from aqueous wastes. Carbon adsorption is a viable and economic process for organic waste streams containing up to 1 to 5 percent of refractory or toxic organics. Its applicability for removal of inorganics such as metals has also been demonstrated.

Flotation

Flotation is the process of causing particles such as metal hydroxides or oil to float to the surface of a tank where they can be concentrated and removed. This is accomplished by releasing gas bubbles which attach to the solid particles, increasing their buoyancy and causing them to float. In principle, this process is the opposite of sedimentation. Figure VII-22 shows one type of flotation system.

Flotation is used primarily in the treatment of wastewater streams that carry heavy loads of finely divided suspended solids or oil. Solids having a specific gravity only slightly greater than 1.0, which would require abnormally long sedimentation times, may be removed in much less time by flotation.

This process may be performed in several ways: foam, dispersed air, dissolved air, gravity, and vacuum flotation are the most commonly used techniques. Chemical additives are often used to enhance the performance of the flotation process.

The principal difference among types of flotation is the method of generating the minute gas bubbles (usually air) in a suspension of water and small particles. Chemicals may be used to improve the efficiency with any of the basic methods. The following paragraphs describe the different flotation techniques and the method of bubble generation for each process.

Froth Flotation - Froth flotation is based on differences in the physiochemical properties in various particles. Wettability and surface properties affect the ability of the particles to attach themselves to gas bubbles in an aqueous medium. In froth flotation, air is blown through the solution containing flotation

reagents. The particles with water repellant surfaces stick to air bubbles as they rise and are brought to the surface. A mineralized froth layer, with mineral particles attached to air bubbles, is formed. Particles of other minerals which are readily wetted by water do not stick to air bubbles and remain in suspension.

Dispersed Air Flotation - In dispersed air flotation, gas bubbles are generated by introducing the air by means of mechanical agitation with impellers or by forcing air through porous media. Dispersed air flotation is used mainly in the metallurgical industry.

Dissolved Air Flotation - In dissolved air flotation, bubbles are produced by releasing air from a superstaturated solution under relatively high pressure. There are two types of contact between the gas bubbles and particles. The first type is predominant in the flotation of flocculated materials and involves the entrapment of rising gas bubbles in the flocculated particles as they increase in size. The bond between the bubble and particle is one of physical capture only. The second type of contact is one of adhesion. Adhesion results from the intermolecular attraction exerted at the interface between the solid particle and the gaseous bubble.

Vacuum Flotation - This process consists of saturating the wastewater with air either directly in an aeration tank, or by permitting air to enter on the suction of a wastewater pump. A partial vacuum is applied, which causes the dissolved air to come out of solution as minute bubbles. The bubbles attach to solid particles and rise to the surface to form a scum blanket, which is normally removed by a skimming mechanism. Grit and other heavy solids that settle to the bottom are generally raked to a central sludge pump for removal. A typical vacuum flotation unit consists of a covered cylindrical tank in which a partial vacuum is maintained. The tank is equipped with scum and sludge removal mechanisms. The floating material is continuously swept to the tank periphery, automatically discharged into a scum trough, and removed from the unit by a pump also under partial vacuum. Auxiliary equipment includes an aeration tank for saturating the wastewater with air, a tank with a short retention time for removal of large bubbles, vacuum pumps, and sludge pumps.

Application and Performance. Flotation is used primarily in the treatment of wastewater streams that carry heavy loads of finely divided suspended solids or oil. Solids having a specific gravity only slightly greater than 1.0, which would require abnormally long sedimentation times, may be removed in much less time by flotation.

The primary variables for flotation design are pressure, feed solids concentration, and retention period. The suspended solids in the effluent decrease, and the concentration of solids in the float increases, with increasing retention period. When the flotation process is used primarily for clarification, a retention period of 20 to 30 minutes is adequate for separation and concentration.

Advantages and Limitations. Some advantages of the flotation process are the high levels of solids separation achieved in many applications, the relatively low energy requirements, and the adaptability to meet the treatment requirements of different waste types. Limitations of flotation are that it often requires addition of chemicals to enhance process performance and that it generates large quantities of solid waste.

Operational Factors. Reliability: Flotation systems normally are very reliable with proper maintenance of the sludge collector mechanism and the motors and pumps used for aeration.

Maintainability: Routine maintenance is required on the pumps and motors. The sludge collector mechanism is subject to possible corrosion or breakage and may require periodic replacement.

Solid Waste Aspects: Chemicals are commonly used to aid the flotation process by creating a surface or a structure that can easily adsorb or entrap air bubbles. Inorganic chemicals, such as the aluminum and ferric salts, and activated silica, can bind the particulate matter together and create a structure that can entrap air bubbles. Various organic chemicals can change the nature of either the air-liquid interface or the solid-liquid interface, or both. These compounds usually collect on the interface to bring about the desired changes. The added chemicals plus the particles in solution combine to form a large volume of sludge which must be further treated or properly disposed.

Demonstration Status. Flotation is a fully developed process and is readily available for the treatment of a wide variety of industrial waste streams. Dissolved air flotation technology is used by can manufacturing plants to remove oil and grease in the wastewater from can wash lines. It is not currently used to treat aluminum forming wastewaters.

Centrifugation

Centrifugation is the application of centrifugal force to separate solids and liquids in a liquid-solid mixture or to effect concentration of the solids. The application of centrifugal force is effective because of the density differential normally

found between the insoluble solids and the liquid in which they are contained. As a waste treatment procedure, centrifugation is most often applied to dewatering of sludges. One type of centrifuge is shown in Figure VII-23.

There are three common types of centrifuges: the disc, basket, and conveyor type. All three operate by removing solids under the influence of centrifugal force. The fundamental difference between the three types is the method by which solids are collected in and discharged from the bowl.

In the disc centrifuge, the sludge feed is distributed between narrow channels that are present as spaces between stacked conical discs. Suspended particles are collected and discharged continuously through small orifices in the bowl wall. The clarified effluent is discharged through an overflow weir.

A second type of centrifuge which is useful in dewatering sludges is the basket centrifuge. In this type of centrifuge, sludge feed is introduced at the bottom of the basket, and solids collect at the bowl wall while clarified effluent overflows the lip ring at the top. Since the basket centrifuge does not have provision for continuous discharge of collected cake, operation requires interruption of the feed for cake discharge for a minute or two in a 10 to 30 minute overall cycle.

The third type of centrifuge commonly used in sludge dewatering is the conveyor type. Sludge is fed through a stationary feed pipe into a rotating bowl in which the solids are settled out against the bowl wall by centrifugal force. From the bowl wall, they are moved by a screw to the end of the machine, at which point they are discharged. The liquid effluent is discharged through ports after passing the length of the bowl under centrifugal force.

Application and Performance. Virtually all industrial waste treatment systems producing sludge can use centrifugation to dewater it. Centrifugation is currently being used by a wide range of industrial concerns.

The performance of sludge dewatering by centrifugation depends on the feed rate, the rotational velocity of the drum, and the sludge composition and concentration. Assuming proper design and operation, the solids content of the sludge can be increased to 20 to 35 percent.

Advantages and Limitations. Sludge dewatering centrifuges have minimal space requirements and show a high degree of effluent clarification. The operation is simple, clean, and relatively

inexpensive. The area required for a centrifuge system installation is less than that required for a filter system or sludge drying bed of equal capacity, and the initial cost is lower.

Centrifuges have a high power cost that partially offsets the low initial cost. Special consideration must also be given to providing sturdy foundations and soundproofing because of the vibration and noise that result from centrifuge operation. Adequate electrical power must also be provided since large motors are required. The major difficulty encountered in the operation of centrifuges has been the disposal of the concentrate which is relatively high in suspended, non-settling solids.

Operational Factors. Reliability: Centrifugation is highly reliable with proper control of factors such as sludge feed, consistency, and temperature. Pretreatment such as grit removal and coagulant addition may be necessary, depending on the composition of the sludge and on the type of centrifuge employed.

Maintainability: Maintenance consists of periodic lubrication, cleaning, and inspection. The frequency and degree of inspection required varies depending on the type of sludge solids being dewatered and the maintenance service conditions. If the sludge is abrasive, it is recommended that the first inspection of the rotating assembly be made after approximately 1,000 hours of operation. If the sludge is not abrasive or corrosive, then the initial inspection might be delayed. Centrifuges not equipped with a continuous sludge discharge system require periodic shutdowns for manual sludge cake removal.

Solid Waste Aspects: Sludge dewatered in the centrifugation process may be disposed of by landfill. The clarified effluent (centrate), if high in dissolved or suspended solids, may require further treatment prior to discharge.

Demonstration Status. Centrifugation is currently used in a great many commercial applications to dewater sludge. Work is underway to improve the efficiency, increase the capacity, and lower the costs associated with centrifugation.

Coalescing

The basic principle of coalescence involves the preferential wetting of a coalescing medium by oil droplets which accumulate on the medium and then rise to the surface of the solution as they combine to form larger particles. The most important requirements for coalescing media are wettability for oil and large surface area. Monofilament line is sometimes used as a coalescing medium.

Coalescing stages may be integrated with a wide variety of gravity oil separation devices, and some systems may incorporate several coalescing stages. In general, a preliminary oil skimming step is desirable to avoid overloading the coalescer.

One commercially marketed system for oily waste treatment combines coalescing with inclined plant separation and filtration. In this system, the oily wastes flow into an inclined plate settler. This unit consists of a stack of inclined baffle plates in a cylindrical container with an oil collection chamber at the top. The oil droplets rise and impinge upon the undersides of the plants. They then migrate upward to a guide rib that directs the oil to the oil collection chamber, from which oil is discharged for reuse or disposal.

The oily water continues on through another cylinder containing replaceable filter cartridges that remove suspended particles from the waste. From there the wastewater enters a final cylinder in which the coalescing material is housed. As the oily water passes through the many small, irregular, continuous passages in the coalescing material, the oil droplets coalesce and rise to an oil collection chamber.

Application and Performance. Coalescing is used to treat oily wastes that do not separate readily in simple gravity systems. The three stage system described above has achieved effluent concentrations of 10 to 15 mg/l oil and grease from raw waste concentrations of 1,000 mg/l or more.

Advantages and Limitations. Coalescing allows removal of oil droplets too finely dispersed for conventional gravity separation-skimming technology. It also can significantly reduce the residence times (and therefore separator volumes) required to achieve separation of oil from some wastes. Because of its simplicity, coalescing provides generally high reliability and low capital and operating costs. Coalescing is not generally effective in removing soluble or chemically stabilized emulsified oils. To avoid plugging, coalescers must be protected by pretreatment from the very high concentrations of free oil and grease and suspended solids. Frequent replacement of prefilters may be necessary when raw waste oil concentrations are high.

Operational Factors. Reliability: Coalescing is inherently highly reliable since there are no moving parts and the coalescing substrate (monofilament, etc.) is inert in the process and therefore not subject to frequent regeneration or replacement requirements. Large loads or inadequate preliminary treatment; however, may result in plugging or bypass of coalescing stages.

Maintainability: Maintenance requirements are generally limited to replacement of the coalescing medium on an infrequent basis.

Solid Waste Aspects: No appreciable solid waste is generated by this process.

Demonstration Status. Coalescing has been fully demonstrated in industries generating oily wastewater, although none are known to be in use at any aluminum forming facility.

Cyanide Oxidation by Chlorine

Cyanide oxidation using chlorine is widely used in industrial waste treatment to oxidize cyanide. Chlorine can be utilized in either the elemental or hypochlorite forms. This classic procedure can be illustrated by the following two step chemical reaction:

1. $Cl_2 + NaCN + 2NaOH \rightarrow NaCNO + 2NaCl + H_2O$

2. $3Cl_2 + 6NaOH + 2NaCNO \rightarrow 2NaHCO_3 + N_2 + 6NaCl + 2H_2O$

The reaction presented as equation (2) for the oxidation of cyanate is the final step in the oxidation of cyanide. A complete system for the alkaline chlorination of cyanide is shown in Figure VII-24.

The alkaline chlorination process oxidizes cyanides to carbon dioxide and nitrogen. The equipment often consists of an equalization tank followed by two reaction tanks, although the reaction can be carried out in a single tank. Each tank has an electronic recorder-controller to maintain required conditions with respect to pH and oxidation reduction potential (ORP). In the first reaction tank, conditions are adjusted to oxidize cyanides to cyanates. To effect the reaction, chlorine is metered to the reaction tank as required to maintain the ORP in the range of 350 to 400 millivolts, and 50 percent aqueous caustic soda is added to maintain a pH range of 9.5 to 10. In the second reaction tank, conditions are maintained to oxidize cyanate to carbon dioxide and nitrogen. The desirable ORP and pH for this reaction are 600 millivolts and a pH of 8.0. Each of the reaction tanks is equipped with a propeller agitator designed to provide approximately one turnover per minute. Treatment by the batch process is accomplished by using two tanks, one for collection of water over a specified time period, and one tank for the treatment of an accumulated batch. If dumps of concentrated wastes are frequent, another tank may be required to equalize the flow to the treatment tank. When the holding tank is full, the liquid is transferred to the reaction tank for treatment. After treatment, the supernatant is discharged and the sludges are collected for removal and ultimate disposal.

Application and Performance. The oxidation of cyanide waste by chlorine is a classic process and is found in most industrial plants using cyanide. This process is capable of achieving effluent levels of free cyanide that are nondetectable. The process is potentially applicable to aluminum forming facilities where cyanide is a component in conversion coating formulations or is added as a corrosion inhibitor in heat treatment operations.

Advantages and Limitations. Some advantages of chlorine oxidaton for handling process effluents are operation at ambient temperature, suitability for automatic control, and low cost. Disadvantages include the need for careful pH control, possible chemical interference in the treatment of mixed wastes, and the potential hazard of storing and handling chlorine gas. If organic compounds are present, toxic chlorinated organics may be generated. Alkaline chlorination is not effective in treating metallocyanide complexes, such as the ferrocyanide.

Operational Factors. Reliability: Chlorine oxidation is highly reliable with proper monitoring and control, and proper pretreatment to control interfering substances.

Maintainability: Maintenance consists of periodic removal of sludge and recalibration of instruments.

Solid Waste Aspects: There is no solid waste problem associated with chlorine oxidation.

Demonstration Status. The oxidation of cyanide wastes by chlorine is a widely used process in plants using cyanide in cleaning and metal processing baths.

Cyanide Oxidation by Ozone

Ozone is a highly reactive oxidizing agent which is approximately 10 times more soluble than oxygen on a weight basis in water. Ozone may be produced by several methods, but the silent electrical discharge method is predominant in the field. The silent electrical discharge process produces ozone by passing oxygen or air between electrodes separated by an insulating material. A complete ozonation system is represented in Figure VII-25.

Application and Performance. Ozonation has been applied commercially to oxidize cyanides, phenolic chemicals, and organometal complexes. Its applicability to photographic wastewaters has been studied in the laboratory with good results. Ozone is used in industrial waste treatment primarily to oxidize cyanide to cyanate and to oxidize phenols and dyes to a variety of colorless nontoxic products.

Oxidation of cyanide to cyanate is illustrated below:

$$CN^- + O_3 \longrightarrow CNO^- + O_2$$

Continued exposure to ozone will convert the cyanate formed to carbon dioxide and ammonia; however, this is not economically practical.

Ozone oxidation of cyanide to cyanate requires 1.8 to 2.0 pounds ozone per pound of CN^-; complete oxidation requires 4.6 to 5.0 pounds ozone per pound of CN^-. Zinc, copper, and nickel cyanides are easily destroyed to a nondetectable level, but cobalt and iron cyanides are more resistant to ozone treatment.

Advantages and Limitations. Some advantages of ozone oxidation for handling process effluents are its suitability to automatic control and on-site generation and the fact that reaction products are not chlorinated organics and no dissolved solids are added in the treatment step. Ozone in the presence of activated carbon, ultraviolet, and other promoters shows promise of reducing reaction time and improving ozone utilization, but the process at present is limited by high capital expense, possible chemical interference in the treatment of mixed wastes, and an energy requirement of 25 kwh/kg of ozone generated. Cyanide is not economically oxidized with O_3 beyond the cyanate form.

Operational Factors. Reliability: Ozone oxidation is highly reliable with proper monitoring and control, and proper preliminary treatment to control interfering substances.

Maintainability: Maintenance consists of periodic removal of sludge, and periodic renewal of filters and desiccators required for the input of clean dry air; filter life is a function of input concentrations of detrimental constituents.

Solid Waste Aspects: Preliminary treatment to eliminate substances which will interfere with the process may be necessary. Dewatering of sludge generated in the ozone oxidation process or in an "in-line" process may be desirable prior to disposal.

Cyanide Oxidation by Ozone with UV Radiation

One of the modifications of the ozonation process is the simultaneous application of ultraviolet light and ozone for the treatment of wastewater, including treatment of halogenated organics. The combined action of these two forms produces reactions by photolysis, photosensitization, hydroxylation, oxygenation, and oxidation. The process is unique because several reactions and reaction species are active simultaneously.

Ozonation is facilitated by ultraviolet absorption because both the ozone and the reactant molecules are raised to a higher energy state so that they react more rapidly. In addition, free radicals for use in the reaction are readily hydrolyzed by the water present. The energy and reaction intermediates created by the introduction of both ultraviolet and ozone greatly reduce the amount of ozone required compared with a system using ozone alone. Figure VII-26 shows a three-stage UV-ozone system. A system to treat mixed cyanides requires preliminary treatment that involves chemical coagulation, sedimentation, clarification, equalization, and pH adjustment.

Application and Performance. The ozone-UV radiation process was developed primarily for cyanide treatment in the electroplating and color photo-processing areas. It has been successfully applied to mixed cyanides and organics from organic chemicals manufacturing processes. The process is particularly useful for treatment of complexed cyanides such as ferricyanide, copper cyanide, and nickel cyanide, that are resistant to ozone.

Demonstration Status. Ozone combined with UV radiation is a relatively new technology. Four units are currently in operation and all four treat cyanide-bearing waste. Ozone-UV treatment could be used in aluminum forming plants to destroy cyanide present in waste streams from some conversion coating and heat treatment operations.

Cyanide Oxidation by Hydrogen Peroxide

Hydrogen peroxide oxidation removes both cyanide and metals in cyanide-containing wastewaters. In this process, cyanide-bearing waters are heated to 49°C to 54°C (120°F to 130°F) and the pH is adjusted to 10.5 to 11.8. Formalin (37 percent formaldehyde) is added while the tank is vigorously agitated. After two to five minutes, a proprietary peroxygen compound (41 percent hydrogen peroxide with a catalyst and additives) is added. After an hour of mixing, the reaction is complete. The cyanide is converted to cyanate and the metals are precipitated as oxides or hydroxides. The metals are then removed from solution by either settling or filtration.

The main equipment required for this process is two holding tanks equipped with heaters and air spargers or mechanical stirrers. These tanks may be used in a batch or continuous fashion, with one tank being used for treatment while the other is being filled. A settling tank or a filter is needed to concentrate the precipitate.

Application and Performance. The hydrogen peroxide oxidation process is applicable to cyanide-bearing wastewaters, especially

those containing metal-cyanide complexes. In terms of waste reduction performance, this process can reduce total cyanide to less than 0.1 mg/l and the zinc or cadmium concentrations to less than 1.0 mg/l.

Advantages and Limitations. Chemical costs are similar to those for alkaline chlorination using chlorine and lower than those for treatment with hypochlorite. All free cyanide reacts and is completely oxidized to the less toxic cyanate state. In addition, the metals precipitate and settle quickly, and they may be recoverable in many instances; however, the process requires energy expenditures to heat the wastewater prior to treatment.

Demonstration Status. This treatment process was introduced in 1971 and is used in several facilities. No aluminum forming plants use oxidation by hydrogen peroxide.

Evaporation

Evaporation is a concentration process. Water is evaporated from a solution, increasing the concentration of solute in the remaining solution. If the resulting water vapor is condensed back to liquid water, the evaporation-condensation process is called distillation. However, to be consistent with industry terminology, evaporation is used in this report to describe both processes. Both atmospheric and vacuum evaporation are commonly used in industry today. Specific evaporation techniques are shown in Figure VII-27 and discussed below.

Atmospheric evaporation could be accomplished simply by boiling the liquid. To aid evaporation, heated liquid is sprayed on an evaporation surface, and air is blown over the surface and subsequently released to the atmosphere. Thus, evaporation occurs by humidification of the air stream, similar to a drying process. Equipment for carrying out atmospheric evaporation is quite similar for most applications. The major element is generally a packed column with an accumulator bottom. Accumulated wastewater is pumped from the base of the column, through a heat exchanger, and back into the top of the column, where it is sprayed into the packing. At the same time, air drawn upward through the packing by a fan is heated as it contacts the hot liquid. The liquid partially vaporizes and humidifies the air stream. The fan then blows the hot, humid air to the outside atmosphere. A scrubber is often unnecessary because the packed column itself acts as a scrubber.

Another form of atmospheric evaporator also works on the air humidification principle, but the evaporated water is recovered for reuse by condensation. These air humidification techniques operate well below the boiling point of water and can utilize waste process heat to supply the energy required.

In vacuum evaporation, the evaporation pressure is lowered to cause the liquid to boil at reduced temperatures. All of the water vapor is condensed and, to maintain the vacuum condition, noncondensible gases (air in particular) are removed by a vacuum pump. Vacuum evaporation may be either single or double effect. In double effect evaporation, two evaporators are used, and the water vapor from the first evaporator (which may be heated by steam) is used to supply heat to the second evaporator. As it supplies heat, the water vapor from the first evaporator condenses. Approximately equal quantities of wastewater are evaporated in each unit; thus, the double effect system evaporates twice the amount of water that a single effect system does, at nearly the same cost in energy but with added capital cost and complexity. The double effect technique is thermodynamically possible because the second evaporator is maintained at lower pressure (higher vacuum) and, therefore, lower evaporation temperature. Another means of increasing energy efficiency is vapor recompression (thermal or mechanical), which enables heat to be transferred from the condensing water vapor to the evaporating wastewater. Vacuum evaporation equipment may be classified as submerged tube or climbing film evaporation units.

In the most commonly used submerged tube evaporator, the heating and condensing coil are contained in a single vessel to reduce capital cost. The vacuum in the vessel is maintained by an eductor-type pump, which creates the required vacuum by the flow of the condenser cooling water through a venturi. Wastewater accumulates in the bottom of the vessel, and it is evaporated by means of submerged steam coils. The resulting water vapor condenses as it contacts the condensing coils in the top of the vessel. The condensate then drips off the condensing coils into a collection trough that carries it out of the vessel. Concentrate is removed from the bottom of the vessel.

The major elements of the climbing film evaporator are the evaporator, separator, condenser, and vacuum pump. Wastewater is "drawn" into the system by the vacuum so that a constant liquid level is maintained in the separator. Liquid enters the steam-jacketed evaporator tubes, and part of it evaporates so that a mixture of vapor and liquid enters the separator. The design of the separator is such that the liquid is continuously circulated from the separator to the evaporator. The vapor entering the separator flows out through a mesh entrainment separator to the condenser, where it is condensed as it flows down through the condenser tubes. The condensate, along with any entrained air, is pumped out of the bottom of the condenser by a liquid ring vacuum pump. The liquid seal provided by the condensate keeps the vacuum in the system from being broken.

Application and Performance. Both atmospheric and vacuum evaporation are used in many industrial plants, mainly for the concentration and recovery of process solutions. Many of these evaporators also recover water for rinsing. Evaporation has also been applied to recovery of phosphate metal-cleaning solutions.

In theory, evaporation should yield a concentrate and a deionized condensate. Actually, carry-over has resulted in condensate metal concentrations as high as 10 mg/l, although the usual level is less than 3 mg/l, pure enough for most final rinses. The condensate may also contain organic brighteners and antifoaming agents. These can be removed with an activated carbon bed, if necessary. Samples from one plant showed 1,900 mg/l zinc in the feed, 4,570 mg/l in the concentrate, and 0.4 mg/l in the condensate. Another plant had 416 mg/l copper in the feed and 21,800 mg/l in the concentrate. Chromium analysis for that plant indicated 5,060 mg/l in the feed and 27,500 mg/l in the concentrate. Evaporators are available in a range of capacities, typically from 15 to 75 gph, and may be used in parallel arrangements for processing of higher flow rates.

Advantages and Limitations. Advantages of the evaporation process are that it permits recovery of a wide variety of process chemicals, and it is often applicable to concentration or removal of compounds which cannot be accomplished by any other means. The major disadvantage is that the evaporation process consumes relatively large amounts of energy for the evaporation of water. The recovery of waste heat from many industrial processes (e.g., diesel generators, incinerators, boilers, and furnaces) should be considered as a source of this heat for a totally integrated evaporation system. Also, in some cases solar heating could be inexpensively and effectively applied to evaporation units. For some applications, preliminary treatment may be required to remove solids or bacteria which tend to cause fouling in the condenser or evaporator. The buildup of scale on the evaporator surfaces reduces the heat transfer efficiency and may present a maintenance problem or increase operating cost. It has been demonstrated that fouling of the heat transfer surfaces can be avoided or minimized for certain dissolved solids by maintaining a seed slurry which provides preferential sites for precipitate deposition. In addition, low temperature differences in the evaporator will eliminate nucleate boiling and supersaturation effects. Steam distillable impurities in the process stream are carried over with the product water and must be handled by preliminary or post treatment.

Operational Factors. Reliability: Proper maintenance will ensure a high degree of reliability for the system. Without such attention, rapid fouling or deterioration of vacuum seals may occur, especially when handling corrosive liquids.

Maintainability: Operating parameters can be automatically controlled. Preliminary treatment may be required, as well as periodic cleaning of the system. Regular replacement of seals, especially in a corrosive environment, may be necessary.

Solid Waste Aspects: With only a few exceptions, the process does not generate appreciable quantities of solid waste.

Demonstration Status. Evaporation is a fully developed, commercially available wastewater treatment system. It is used extensively to recover plating chemicals in the electroplating industry and a pilot scale unit has been used in connection with phosphating of aluminum. Proven performance in silver recovery indicates that evaporation could be a useful treatment operation for the photographic industry, as well as for metal finishing.

Gravity Sludge Thickening

In the gravity thickening process, dilute sludge is fed from a primary settling tank or clarifier to a thickening tank where rakes stir the sludge gently to densify it and to push it to a central collection well. The supernatant is returned to the primary settling tank. The thickened sludge that collects on the bottom of the tank is pumped to dewatering equipment or hauled away. Figure VII-28 shows the construction of a gravity thickener.

Application and Performance. Thickeners are generally used in facilities where the sludge is to be further dewatered by a compact mechanical device such as a vacuum filter or centrifuge. Doubling the solids content in the thickener substantially reduces capital and operating cost of the subsequent dewatering device and also reduces cost for hauling. The process is potentially applicable to almost any industrial plant.

Organic sludges from sedimentation units of 1 to 2 percent solids concentration can usually be gravity thickened to 6 to 10 percent; chemical sludges can be thickened to 4 to 6 percent.

Advantages and Limitations. The principal advantage of a gravity sludge thickening process is that it facilitates further sludge dewatering. Other advantages are high reliability and minimum maintenance requirements.

Limitations of the sludge thickening process are its sensitivity to the flow rate through the thickener and the sludge removal rate. These rates must be low enough not to disturb the thickened sludge.

Operational Factors. Reliability: Reliability is high with proper design and operation. A gravity thickener is designed on the basis of square feet per pound of solids per day, in which the required surface area is related to the solids entering and leaving the unit. Thickener area requirements are also expressed in terms of mass loading, kilograms of solids per square meter per day (lbs/sq ft/day).

Maintainability: Twice a year, a thickener must be shut down for lubrication of the drive mechanisms. Occasionally, water must be pumped back through the system in order to clear sludge pipes.

Solid Waste Aspects: Thickened sludge from a gravity thickening process will usually require further dewatering prior to disposal, incineration, or drying. The clear effluent may be recirculated in part, or it may be subjected to further treatment prior to discharge.

Demonstration Status. Gravity sludge thickeners are used throughout industry to reduce sludge water content to a level where the sludge may be efficiently handled. Further dewatering is usually practiced to minimize costs of hauling the sludge to approved landfill areas.

Ion Exchange

Ion exchange is a process in which ions, held by electrostatic forces to charged functional groups on the surface of the ion exchange resin, are exchanged for ions of similar charge from the solution in which the resin is immersed. This is classified as a sorption process because the exchange occurs on the surface of the resin, and the exchanging ion must undergo a phase transfer from solution phase to solid phase. Thus, ionic contaminants in a waste stream can be exchanged for the harmless ions of the resin.

Although the precise technique may vary slightly according to the application involved, a generalized process description follows. The wastewater stream being treated passes through a filter to remove any solids, then flows through a cation exchanger which contains the ion exchange resin. Here, metallic impurities such as copper, iron, and trivalent chromium are retained. The stream then passes through the anion exchanger and its assocaited resin. Hexavalent chromium (in the form of chromate or dichromate), for example, is retained in this stage. If one pass does not reduce the contaminant levels sufficiencly, the stream may then enter another series of exchangers. Many ion exchange systems are equipped with more than one set of exchangers for this reason.

The other major portion of the ion exchange process concerns the regeneration of the resin, which now holds those impurities retained from the waste stream. An ion exchange unit with in-place regeneration is shown in Figure VII-29. Metal ions such as nickel are removed by an acid, cation exchange resin, which is regenerated with hydrochloric or sulfuric acid, replacing the metal ion with one or more hydrogen ions. Anions such as dichromate are removed by a basic anion exchange resin, which is regenerated with sodium hydroxide, replacing the anion with one or more hydroxyl ions. The three principal methods employed by industry for regenerating the spent resin are:

(A) Replacement Service: A regeneration service replaces the spent resin with regenerated resin, and regenerates the spent resin at its own facility. The service then has the problem of treating and disposing of the spent regenerant.

(B) In-Place Regeneration: Some establishments may find it less expensive to do their own regeneration. The spent resin column is shut down for perhaps an hour, and the spent resin is regenerated. This results in one or more waste streams which must be treated in an appropriate manner. Regeneration is performed as the resins require it, usually every few months.

(C) Cyclic Regeneration: In this process, the regeneration of the spent resins takes place within the ion exchange unit itself in alternating cycles with the ion removal process. A regeneration frequency of twice an hour is typical. This very short cycle time permits operation with a very small quantity of resin and with fairly concentrated solutions, resulting in a very compact system. Again, this process varies according to application, but the regeneration cycle generally begins with caustic being pumped through the anion exchanger, carrying out hexavalent chromium, for example, as sodium dichromate. The sodium dichromate stream then passes through a cation exchanger, converting the sodium dichromate to chromic acid. After concentration by evaporation or other means, the chromic acid can be returned to the process line. Meanwhile, the cation exchanger is regenerated with sulfuric acid, resulting in a waste acid stream containing the metallic impurities removed earlier. Flushing the exchangers with water completes the cycle. Thus, the wastewater is purified and, in this example, chromic acid is recovered. The ion exchangers, with newly regenerated resin, then enter the ion removal cycle again.

Application and Performance. The list of pollutants for which the ion exchange system has proven effective includes aluminum, arsenic, cadmium, chromium (hexavalent and trivalent), copper, cyanide, gold, iron, lead, manganese, nickel, selenium, silver, tin, zinc, and others. Thus, it can be applied to a wide variety of industrial concerns. Because of the heavy concentrations of metals in their wastewater, the metal finishing industries utilize ion exchange in several ways. As an end-of-pipe treatment, ion exchange is certainly feasible, but its greatest value is in recovery applications. It is commonly used as an integrated treatment to recover rinse water and process chemicals. Some electroplating facilities use ion exchange to concentrate and purify plating baths. Also, many industrial concerns, including a number of aluminum forming plants, use ion exchange to reduce salt concentrations in incoming water sources.

Ion exchange is highly efficient at recovering metal-bearing solutions. Recovery of chromium, nickel, phosphate solution, and sulfuric acid from anodizing is common. A chromic acid recovery efficiency of 99.5 percent has been demonstrated. Typical data for purification of rinse water are displayed in Table VII-25.

Advantages and Limitations. Ion exchange is a versatile technology applicable to a great many situations. This flexibility, along with its compact nature and performance, makes ion exchange a very effective method of wastewater treatment. However, the resins in these systems can prove to be a limiting factor. The thermal limits of the anion resins, generally in the vicinity of 60°C, could prevent its use in certain situations. Similarly, nitric acid, chromic acid, and hydrogen peroxide can all damage the resins, as will iron, manganese, and copper when present with sufficient concentrations of dissolved oxygen. Removal of a particular trace contaminant may be uneconomical because of the presence of other ionic species that are preferentially removed. The regeneration of the resins presents its own problems. The cost of the regenerative chemicals can be high. In addition, the waste streams originating from the regeneration process are extremely high in pollutant concentrations, although low in volume. These must be further processed for proper disposal.

Operational Factors. Reliability: With the exception of occasional clogging or fouling of the resins, ion exchange has proved to be a highly dependable technology.

Maintainability: Only the normal maintenance of pumps, valves, piping, and other hardware used in the regeneration process is required.

Solid Waste Aspects: Few, if any, solids accumulate within the ion exchangers, and those which do appear are removed by the

regeneration process. Proper prior treatment and planning can eliminate solid buildup problems altogether. The brine resulting from regeneration of the ion exchange resin most usually must be treated to remove metals before discharge. This can generate solid waste.

Demonstration Status. All of the ion exchange applications discussed in this section are in commercial use, and industry sources estimate the number of ion exchange units currently in the field at well over 120. The research and development in ion exchange is focusing on improving the quality and efficiency of the resins, rather than new applications. Work is also being done on a continuous regeneration process whereby the resins are contained on a fluid- transfusible belt. The belt passes through a compartmented tank with ion exchange, washing, and regeneration sections. The resins are therefore continually used and regenerated. No such system, however, has been reported beyond the pilot stage.

Insoluble Starch Xanthate

Insoluble starch xanthate is essentially an ion exchange medium used to remove dissolved heavy metals from wastewater. The water may then either be reused (recovery application) or discharged (end-of-pipe application). In a commercial electroplating operation, starch xanthate is coated on a filter medium. Rinse water containing dragged out heavy metals is circulated through the filters and then reused for rinsing. The starch-heavy metal complex is disposed of and replaced periodically. Laboratory tests indicate that recovery of metals from the complex is feasible, with regeneration of the starch xanthate. Besides electroplating, starch xanthate is potentially applicable to aluminum forming, coil coating, porcelain enameling, copper fabrication, and any other industrial plants where dilute metal wastewater streams are generated. Its present use is limited to one electroplating plant.

Peat Adsorption

Peat moss is a complex natural organic material containing lignin and cellulose as major constituents. These constituents, particularly lignin, bear polar functional groups, such as alcohols, aldehydes, ketones, acids, phenolic hydroxides, and ethers, that can be involved in chemical bonding. Because of the polar nature of the material, its adsorption of dissolved solids such as transition metals and polar organic molecules is quite high. These properties have led to the use of peat as an agent for the purification of industrial wastewater.

Peat adsorption is a "polishing" process which can achieve very low effluent concentrations for several pollutants. If the concentrations of pollutants are above 10 mg/l, then peat adsorption must be preceded by pH adjustment for metals precipitation and subsequent clarification. Pretreatment is also required for chromium wastes using ferric chloride and sodium sulfide. The wastewater is then pumped into a large metal chamber called a kier which contains a layer of peat through which the waste stream passes. The water flows to a second kier for further adsorption. The wastewater is then ready for discharge. This system may be automated or manually operated.

Application and Performance. Peat adsorption can be used in aluminum forming plants for removal of residual dissolved metals from clarifier effluent. Peat moss may be used to treat wastewaters containing heavy metals such as mercury, cadmium, zinc, copper, iron, nickel, chromium, and lead, as well as organic matter such as oil, detergents, and dyes. Peat adsorption is currently used commercially at a textile plant, a newsprint facility, and a metal reclamation operation.

Table VII-26 contains performance figures obtained from pilot plant studies. Peat adsorption was preceded by pH adjustment for precipitation and by clarification.

In addition, pilot plant studies have shown that chelated metal wastes, as well as the chelating agents themselves, are removed by contact with peat moss.

Advantages and Limitations. The major advantages of the system include its ability to yield low pollutant concentrations, its broad scope in terms of the pollutants eliminated, and its capacity to accept wide variations of wastewater composition.

Limitations include the cost of purchasing, storing, and disposing of the peat moss; the necessity for regular replacement of the peat may lead to high operation and maintenance costs. Also, the pH adjustment must be altered according to the composition of the waste stream.

Operational Factors. Reliability: The question of long-term reliability is not yet fully answered. Although the manufacturer reports it to be a highly reliable system, operating experience is needed to verify the claim.

Maintainability: The peat moss used in this process soon exhausts its capacity to adsorb pollutants. At that time, the kiers must be opened, the peat removed, and fresh peat placed inside. Although this procedure is easily and quickly accomplished, it must be done at regular intervals, or the system's efficiency drops drastically.

Solid Waste Aspects: After removal from the kier, the spent peat must be eliminated. If incineration is used, precautions should be taken to ensure that those pollutants removed from the water are not released again in the combustion process. Presence of sulfides in the spent peat, for example, will give rise to sulfur dioxide in the fumes from burning. The presence of significant quantities of toxic heavy metals in aluminum forming wastewater will in general preclude incineration of peat used in treating these wastes.

Demonstration Status. Only three facilities currently use commercial adsorption systems in the United States - a textile manufacturer, a newsprint facility, and a metal reclamation firm. No data have been reported showing the use of peat adsorption in aluminum forming plants.

Membrane Filtration

Membrane filtration is a treatment system for removing precipitated metals from a wastewater stream. It must therefore be preceded by those treatment techniques which will properly prepare the wastewater for solids removal. Typically, a membrane filtration unit is preceded by pH adjustment or sulfide addition for precipitation of the metals. These steps are followed by the addition of a proprietary chemical reagent which causes the precipitate to be non-gelatinous, easily dewatered, and highly stable. The resulting mixture of pretreated wastewater and reagent is continuously recirculated through a filter module and back into a recirculation tank. The filter module contains tubular membranes. While the reagent-metal hydroxide precipitate mixture flows through the inside of the tubes, the water and any dissolved salts permeate the membrane. When the recirculating slurry reaches a concentration of 10 to 15 percent solids, it is pumped out of the system as sludge.

Application and Performance. Membrane filtration appears to be applicable to any wastewater or process water containing metal ions which can be precipitated using hydroxide, sulfide, or carbonate precipitation. It could function as the primary treatment system, but also might find application as a polishing treatment (after precipitation and settling) to ensure continued compliance with metals limitations. Membrane filtration systems are being used in a number of industrial applications, particularly in the metal finishing area. They have also been used for heavy metals removal in the metal fabrication industry and the paper industry.

The permeate is claimed by one manufacturer to contain less than the effluent concentrations shown in Table VII-27, regardless of the influent concentrations. These claims have been largely substantiated by the analysis of water samples at various plants in various industries.

In the performance predictions for this technology, pollutant concentrations are reduced to the levels shown in Table VII-27 unless lower levels are present in the influent stream.

Advantages and Limitations. A major advantage of the membrane filtration system is that installations can use most of the conventional end-of-pipe systems that may already be in place. Removal efficiencies are claimed to be excellent, even with sudden variation of pollutant input rates; however, the effectiveness of the membrane filtration system can be limited by clogging of the filters. Because pH changes in the waste stream greatly intensify clogging problems, the pH must be carefully monitored and controlled. Clogging can force the shutdown of the system and may interfere with production. In addition, relatively high capital cost of this system may limit its use.

Operational Factors. Reliability: Membrane filtration has been shown to be a very reliable system, provided that the pH is strictly controlled. Improper pH can result in the clogging of the membrane. Also, surges in the flow rate of the waste stream must be controlled in order to prevent solids from passing through the filter and into the effluent.

Maintainability: The membrane filters must be regularly monitored, and cleaned or replaced as necessary. Depending on the composition of the waste stream and its flow rate, frequent cleaning of the filters may be required. Flushing with hydrochloric acid for six to 24 hours will usually suffice. In addition, the routine maintenance of pumps, valves, and other plumbing is required.

Solid Waste Aspects: When the recirculating reagent-precipitate slurry reaches 10 to 15 percent solids, it is pumped out of the system. It can then be disposed of directly to a landfill or it can undergo a dewatering process. Because this sludge contains toxic metals, it requires proper disposal.

Demonstration Status. There are more than 25 membrane filtration systems presently in use on metal finishing and similar wastewaters. Bench scale and pilot studies are being run in an attempt to expand the list of pollutants for which this system is known to be effective. Although there are no data on the use of membrane filtration in aluminum forming plants, the concept has been successfully demonstrated using coil coating plant wastewater.

Reverse Osmosis

The process of osmosis involves the passage of a liquid through a semipermeable membrane from a dilute to a more concentrated solution. Reverse osmosis (RO) is an operation in which pressure is applied to the more concentrated solution, forcing the permeate to diffuse through the membrane and into the more dilute solution. This filtering action produces a concentrate and a permeate on opposite sides of the membrane. The concentrate can then be further treated or returned to the original production operation for continued use, while the permeate water can be recycled for use as clean water. Figure VII-30 depicts a reverse osmosis system.

As illustrated in Figure VII-31, there are three basic configurations used in commercially available RO modules: tubular, spiral-wound, and hollow fiber. All of these operate on the principle described above, the major difference being their mechanical and structural design characteristics.

The tubular membrane module uses a porous tube with a cellulose acetate membrane-lining. A common tubular module consists of a length of 2.5 cm (1 inch) diameter tube wound on a supporting spool and encased in a plastic shroud. Feed water is driven into the tube under pressures varying from 40 to 55 atm (600 to 800 psi). The permeate passes through the walls of the tube and is collected in a manifold while the concentrate is drained off at the end of the tube. A less widely used tubular RO module uses a straight tube contained in a housing, under the same operating conditions.

Spiral-wound membranes consist of a porous backing sandwiched between two cellulose acetate membrane sheets and bonded along three edges. The fourth edge of the composite sheet is attached to a large permeate collector tube. A spacer screen is then placed on top of the membrane sandwich and the entire stack is rolled around the centrally located tubular permeate collector. The rolled up package is inserted into a pipe able to withstand the high operating pressures employed in this process, up to 55 atm (800 psi) with the spiral-wound module. When the system is operating, the pressurized product water permeates the membrane and flows through the backing material to the central collector tube. The concentrate is drained off at the end of the container pipe and can be reprocessed or sent to further treatment facilities.

The hollow fiber membrane configuration is made up of a bundle of polyamide fibers of approximately 0.0075 cm (0.003 in.) OD and 0.043 cm (0.0017 in.) ID. A commonly used hollow fiber module contains several hundred thousand of the fibers placed in a long

tube, wrapped around a flow screen, and rolled into a spiral. The fibers are bent in a U-shape and their ends are supported by an epoxy bond. The hollow fiber unit is operated under 27 atm (400 psi), the feed water being dispersed from the center of the module through a porous distributor tube. Permeate flows through the membrane to the hollow interiors of the fibers and is collected at the ends of the fibers.

The hollow fiber and spiral-wound modules have a distinct advantage over the tubular system in that they are able to load a very large membrane surface area into a relatively small volume. However, these two membrane types are much more susceptible to fouling than the tubular system, which has a larger flow channel. This characteristic also makes the tubular membrane much easier to clean and regenerate than either the spiral-wound or hollow fiber modules. One manufacturer claims that their helical tubular module can be physically wiped clean by passing a soft porous polyurethane plug under pressure through the module.

Application and Performance. In a number of metal processing plants, the overflow from the first rinse in a countercurrent setup is directed to a reverse osmosis unit, where it is separated into two streams. The concentrated stream contains dragged out chemicals and is returned to the bath to replace the loss of solution due to evaporation and dragout. The dilute stream (the permeate) is routed to the last rinse tank to provide water for the rinsing operation. The rinse flows from the last tank to the first tank and the cycle is complete.

The closed-loop system described above may be supplemented by the addition of a vacuum evaporator after the RO unit in order to further reduce the volume of reverse osmosis concentrate. The evaporated vapor can be condensed and returned to the last rinse tank or sent on for further treatment.

The largest application has been for the recovery of nickel solutions. It has been shown that RO can generally be applied to most acid metal baths with a high degree of performance, providing that the membrane unit is not overtaxed. The limitations most critical here are the allowable pH range and maximum operating pressure for each particular configuration.

Adequate prefiltration is also essential. Only three membrane types are readily available in commercial RO units, and their overwhelming use has been for the recovery of various acid metal baths. For the purpose of calculating performance predictions of this technology, a rejection ratio of 98 percent is assumed for dissolved salts, with 95 percent permeate recovery.

Advantages and Limitations. The major advantage of reverse osmosis for handling process effluents is its ability to concentrate dilute solutions for recovery of salts and chemicals with low power requirements. No latent heat of vaporization or fusion is required for effecting separations; the main energy requirement is for a high pressure pump. It requires relatively little floor space for compact, high capacity units, and it exhibits good recovery and rejection rates for a number of typical process solutions. A limitation of the reverse osmosis process for treatment of process effluents is its limited temperature range for satisfactory operation. For cellulose acetate systems, the preferred limits are 18°C to 30°C (65°F to 85°F); higher temperatures will increase the rate of membrane hydrolysis and reduce system life, while lower temperatures will result in decreased fluxes with no damage to the membrane. Another limitation is inability to handle certain solutions. Strong oxidizing agents, strongly acidic or basic solutions, solvents, and other organic compounds can cause dissolution of the membrane. Poor rejection of some compounds such as borates and low molecular weight organics is another problem. Fouling of membranes by slightly soluble components in solution or colloids has caused failures, and fouling of membranes by feed waters with high levels of suspended solids can be a problem. A final limitation is inability to treat or achieve high concentration with some solutions. Some concentrated solutions may have initial osmotic pressures which are so high that they either exceed available operating pressures or are uneconomical to treat.

Operational Factors. Reliability: Very good reliability is achieved so long as the proper precautions are taken to minimize the chances of fouling or degrading the membrane. Sufficient testing of the waste stream prior to application of an RO system will provide the information needed to insure a successful application.

Maintainability: Membrane life is estimated to range from six months to three years, depending on the use of the system. Down time for flushing or cleaning is on the order of two hours as often as once each week; a substantial portion of maintenance time must be spent on cleaning any prefilters installed ahead of the reverse osmosis unit.

Solid Waste Aspects: In a closed loop system utilizing RO there is a constant recycle of permeate and a minimal amount of solid waste. Prefiltration eliminates many solids before they reach the module and helps keep the buildup to a minimum. These solids require proper disposal.

Ultrafiltration

Ultrafiltration (UF) is a process which uses semipermeable polymeric membranes to separate emulsified or colloidal materials suspended in a liquid phase by pressurizing the liquid so that it permeates the membrane. The membrane of an ultrafilter forms a molecular screen which retains molecular particles based on their differences in size, shape, and chemical structure. The membrane permits passage of solvents and lower molecular weight molecules. At present, an ultrafilter is capable of removing materials with molecular weights in the range of 1,000 to 100,000 and particles of comparable or larger sizes.

In an ultrafiltration process, the feed solution is pumped through a tubular membrane unit. Water and some low molecular weight materials pass through the membrane under the applied pressure of 10 to 100 psig. Emulsified oil droplets and suspended particles are retained, concentrated, and removed continuously. In contrast to ordinary filtration, retained materials are washed off the membrane filter rather than held by it. Figures VII-33 and VII-34 represent the ultrafiltration process.

Application and Performance. Ultrafiltration has potential application to aluminum forming plants for separation of oils and residual solids from a variety of waste streams. In treating aluminum forming wastewater its greatest applicability would be as a polishing treatment to remove residual precipitated metals after chemical precipitation and clarification. Successful commercial use, however, has been primarily for separation of emulsified oils from wastewater. Over one hundred such units now operate in the United States, treating emulsified oils from a variety of industrial processes. Capacities of currently operating units range from a few hundred gallons a week to 50,000 gallons per day. Concentration of oily emulsions to 60 percent oil or more are possible. Oil concentrates of 40 percent or more are generally suitable for incineration, and the permeate can be treated further and in some cases recycled back to the process. In this way, it is possible to eliminate contractor removal costs for oil from some oily waste streams.

Table VII-28 indicates ultrafiltration performance (note that UF is not intended to remove dissolved solids). The removal percentages shown are typical, but they can be influenced by pH and other conditions. The high TSS level is unusual for this technology and ultrafiltration is assumed to reduce the TSS level by one-third after mixed media filtration.

The permeate or effluent from the ultrafiltration unit is normally of a quality that can be reused in industrial applications or discharged directly. The concentrate from the ultrafiltration unit can be disposed of as any oily or solid waste.

Advantages and Limitations. Ultrafiltration is sometimes an attractive alternative to chemical treatment because of lower capital equipment, installation, and operating costs, very high oil and suspended solids removal, and little required pretreatment. It places a positive barrier between pollutants and effluent which reduces the possibility of extensive pollutant discharge due to operator error or upset in settling and skimming systems. Alkaline values in alkaline cleaning solutions can be recovered and reused in the process.

A limitation of ultrafiltration for treatment of process effluents is its narrow temperature range (18°C to 30°C) for satisfactory operation. Membrane life decreases with higher temperatures, but flux increases at elevated temperatures. Therefore, surface area requirements are a function of temperature and become a tradeoff between initial costs and replacement costs for the membrane. In addition, ultrafiltration cannot handle certain solutions. Strong oxidizing agents, solvents, and other organic compounds can dissolve the membrane. Fouling is sometimes a problem, although the high velocity of the wastewater normally creates enough turbulence to keep fouling at a minimum. Large solids particles can sometimes puncture the membrane and must be removed by gravity settling or filtration prior to the ultrafiltration unit.

Operational Factors. Reliability: The reliaiblity of an ultrafiltration system is dependent on the proper filtration, settling, or other treatment of incoming waste streams to prevent damage to the membrane. Careful pilot studies should be done in each instance to determine necessary pretreatment steps and the exact membrane type to be used. It is advisable to remove any free, floating oil prior to ultrafiltration. Although free oil can be processed, membrane performance may deteriorate.

Maintainability: A limited amount of regular maintenance is required for the pumping system. In addition, membranes must be periodically changed. Maintenance associated with membrane plugging can be reduced by selection of a membrane with optimum physical characteristics and sufficient velocity of the waste stream. It is often necesary to occasionally pass a detergent solution through the system to remove an oil and grease film which accumulates on the membrane. With proper maintenance, membrane life can be greater than 12 months.

Solid Waste Aspects: Ultrafiltration is used primarily to recover solids and liquids. It therefore eliminates solid waste problems when the solids (e.g., paint solids) can be recycled to the process. Otherwise, the stream containing solids must be treated by end-of-pipe equipment. In the most probable applications within the aluminum forming category, the ultrafilter would remove concentrated oily wastes which can be recovered for reuse or used as a fuel.

Demonstration Status. The ultrafiltration process is well developed and commercially available for treatment of wastewater or recovery of certain high molecular weight liquid and solid contaminants. Currently, one plant in the aluminum forming category uses ultrafiltration. This plant ultrafilters its spent rolling oils. Ultrafiltration is well suited for highly concentrated emulsions, for example, rolling and drawing oils, although it is not suitable for free oil.

Vacuum Filtration

In wastewater treatment plants, sludge dewatering by vacuum filtration generally uses cylindrical drum filters. These drums have a filter medium which may be cloth made of natural or synthetic fibers or a wire-mesh fabric. The drum is suspended above and dips into a vat of sludge. As the drum rotates slowly, part of its circumference is subject to an internal vacuum that draws sludge to the filter medium. Water is drawn through the porous filter cake thorugh the drum fabric to a discharge port, and the dewatered sludge, loosened by compressed air, is scraped from the filter mesh. Because the dewatering of sludge on vacuum filters is relatively expensive per kilogram of water removed, the liquid sludge is frequently thickened prior to processing. A vacuum filter is shown in Figure VII-35.

Application and Performance. Vacuum filters are frequently used both in municipal treatment plants and in a wide variety of industries. They are most commonly used in larger facilities, which may have a thickener to double the solids content of clarifier sludge before vacuum filtering. Often a precoat is used to inhibit filter blinding.

The function of vacuum filtration is to reduce the water content of sludge, so that the solids content increases from about 5 percent to between 20 and 30 percent, depending on the waste characteristics.

Advantages and Limitations. Although the initial cost and area requirement of the vacuum filtration system are higher than those of a centrifuge, the operating cost is lower, and no special provisions for sound and vibration protection need be made. The

dewatered sludge from this process is in the form of a moist cake and can be conveniently handled.

Operational Factors. Reliability: Vacuum filter systems have proven reliable at many industrial and municipal treatment facilities. At present, the largest municipal installation is at the West Southwest wastewater treatment plant of Chicago, Illinois, where 96 large filters were installed in 1925, functioned approximately 25 years, and then were replaced with larger units. Original vacuum filters at Minneapolis-St. Paul, Minnesota now have over 28 years of continuous service, and Chicago has some units with similar or greater service life.

Maintainability: Maintenance consists of the cleaning or replacement of the filter media, drainage grids, drainage piping, filter pans, and other parts of the equipment. Experience in a number of vacuum filter plants indicates that maintenance consumes approximately 5 to 15 percent of the total time. If carbonate buildup or other problems are unusually severe, maintenance time may be as high as 20 percent. For this reason, it is desirable to maintain one or more spare units.

If intermittent operation is used, the filter equipment should be drained and washed each time it is taken out of service. An allowance for this wash time must be made in filtering schedules.

Solid Waste Aspects: Vacuum filters generate a solid cake which is usually trucked directly to landfill. All of the metals extracted from the plant wastewater are concentrated in the filter cake as hydroxides, oxides, sulfides, or other salts.

Demonstration Status. Vacuum filtration has been widely used for many years. It is a fully proven, conventional technology for sludge dewatering. Nine aluminum forming plants report its use.

IN-PLANT TECHNOLOGY

The intent of in-plant technology for the aluminum forming point source category is to reduce or eliminate the waste load requiring end-of-pipe treatment and thereby improve the efficiency of an existing wastewater treatment system or reduce the requirements of a new treatment system. In-plant technology involves improved rinsing, water conservation, process bath conservation, reduction of dragout, automatic controls, good housekeeping practices, recovery and reuse of process solutions, process modification, and waste treatment.

Process Water Recycle

Recycling of process water is the practice of recirculating water to be used again for the same purpose. An example of recycling

process water is the return of casting contact cooling water to the casting process after the water passes through a cooling tower. Two types of recycle are possible--recycle with a bleed stream (blowdown) and total recycle. Total recycle may be prohibited by the presence of dissolved solids. Dissolved solids (e.g., sulfates and chlorides) entering a totally recycled waste stream may precipitate, forming scale if the solubility limits of the dissolved solids are exceeded. A bleed stream may be necessary to prevent maintenance problems (pipe plugging or scaling, etc.) that would be created by the precipitation of dissolved solids. While the volume of bleed required is a function of the amount of dissolved solids in the waste stream, 4 or 5 percent bleed is a common value for a variety of process waste streams in the aluminum forming category. The recycle of process water is currently practiced where it is cost effective, where it is necessary due to water shortage, or where the local permitting authority has required it. Recycle, as compared to the once-through use of process water, is an effective method of conserving water.

Application and Performance. Required hardware necessary for recycle is highly site-specific. Basic items include pumps and piping. Additional materials are necessary if water treatment occurs before the water is recycled. These items will be discussed separately with each unit process. Chemicals may be necessary to control scale buildup, slime, and corrosion problems, especially with recycled cooling water. Maintenance and energy use are limited to that required by the pumps, and solid waste generation is dependent on the type of treatment system in place.

Recycling through cooling towers is the most common practice. One type of application is shown in Figure VII-36. Direct chill casting cooling water is recycled through a cooling tower with a blowdown discharge.

A cooling tower is a device which cools water by bringing the water into contact with air. The water and air flows are directed in such a way as to provide maximum heat transfer. The heat is transferred to air primarily by evaporation (about 75 percent), while the remainder is removed by sensible heat transfer.

Factors influencing the rate of heat transfer and, ultimately, the temperature range of the tower, include water surface area, tower packing and configuration, air flow, and packing height. A large water surface area promotes evaporation, and sensible heat transfer rates are lower in proportion to the water surface area provided. Packing (an internal latticework contact area) is often used to produce small droplets of water which evaporate more easily, thus increasing the total surface area per unit of throughput. For a given water flow, increasing the air flow increases the amount of heat removed by maintaining higher

thermodynamic potentials. The packing height in the tower should be high enough so that the air leaving the tower is close to saturation.

A mechanical-draft cooling tower consists of the following major components:

(1) Inlet-water distributor

(2) Packing

(3) Air fans

(4) Inlet-air louvers

(5) Drift or carryover eliminators

(6) Cooled water storage basin.

Advantages and Limitations. Recycle offers economic as well as environmental advantages. Water consumption is reduced and wastewater handling facilities (pumps, pipes, clarifiers, etc.) can thus be sized for smaller flows. By concentrating the pollutants in a much smaller volume (the bleed stream), greater removal efficiencies can be attained by any applied treatment technologies. Recycle may require some treatment such as sedimentation or cooling of water before it is reused.

The ultimate benefit of recycling process water is the reduction in total wastewater discharge and the associated advantages of lower flow streams. A potential problem is the buildup of dissolved solids which could result in scaling. Scaling can usually be controlled by depressing the pH and increasing the bleed flow.

Operational Factors. Reliability and Maintainability: Although the principal construction material in mechanical-draft towers is wood, other materials are used extensively. For long life and minimum maintenance, wood is generally pressure-treated with a preservative. Although the tower structure is usually made of treated redwood, a reasonable amount of treated fir has been used in recent years. Sheathing and louvers are generally made of asbestos cement, and the fan stacks of fiberglass. There is a trend to use fire-resistant extracted PVC as fill which, at little or no increase in cost, offers the advantage of permanent fire-resistant properties.

The major disadvantages of wood are its susceptibility to decay and fire. Steel construction is occasionally used, but not to any great extent. Concrete may be used but has relatively high construction labor costs, although it does offer the advantage of fire protection.

Various chemical additives are used in cooling water systems to control scale, slime, and corrosion. The chemical additives needed depend on the character of the make-up water. All additives have definite limitations and cannot eliminate the need for blowdown. Care should be taken in selecting nontoxic or readily degraded additives, if possible.

Solid Waste Aspects: The only solid waste associated with cooling towers may be removed scale.

Demonstration Status. Many different types of streams in the aluminum forming category are currently recycled. The degree of recycle of these streams is 50 percent or more, most commonly in the 96 to 100 percent range as shown in the water use and wastewater tables in Section V. Recycling process waters is a viable option for many aluminum forming process wastewaters as shown by the current practices in the industry. This can be seen by examining the amount of recycle in place for two major streams.

The direct chill casting contact cooling water stream is representative of cooling water streams. Of the 61 plants with this stream, 21 recycle more than 96 percent of the flow used, four recycle between 90 and 95 percent of the flow used, and two plants recycle less than 90 percent of the flow. The remainder of the plants with direct chill casting either did not recycle the cooling water used, or did not supply enough data to calculate the amount recycled. Several of the plants recycling the cooling water stream use cooling towers and in-line oil skimming devices.

All of the plants that use hot rolling oil emulsions and that gave enough information to calculate discharge rates reported using recycle of the emulsion with either a bleed stream or periodic discharge. The recycled flow would often pass through in-line filters to prevent the buildup of solids. Settling tanks and oil skimming devices were also used to separate spent and tramp oils from the emulsion.

Other aluminum forming wastewaters may also be recycled in varying degrees, depending on the required quality of water necessary for a specific operation. Scrubber waters from casting, forging, etch lines, and annealing operations can be recycled because of the low water quality necessary as make-up water. Forging solution heat treatment contact cooling waters can be recycled in a manner similar to that used in direct chill casting contact cooling water. Extrusion die cleaning rinses can be recycled with minimal difficulty in a manner similar to cleaning or etching practices.

Process Water Reuse

Reuse of process water is the practice of recirculating water

used in one production process for subsequent use in a different production process. An example is the reuse of the rinse water which follows caustic extrusion die cleaning as make-up water for the caustic cleaning solution.

Application and Performance and Demonstration Status. Reuse applications in the aluminum forming category are varied. Some plants reuse extrusion die cleaning rinse water as make-up water for the extrusion die cleaning bath. One plant reuses extrusion press heat treatment contact cooling water and direct chill casting contact cooling water as noncontact cooling water following passage through a cooling tower and an oil skimming device. Primary aluminum plant(s) reuse the contact cooling water from direct chill casting in their reduction scrubbers.

Neat oil rolling, emulsion rolling, drawing, and forging solution heat treatment contact cooling waters have potential as reuse streams in a manner similar to that used for the direct chill casting contact cooling water in the primary aluminum industry. Water may be reused as cleaning or etching rinses following caustic and acidic baths, as casting cooling water, heat treatment solution contact cooling water, or die cleaning rinses.

Advantages and Limitations. Advantages of reuse are similar to the advantages of recycle. Water consumption is reduced and wastewater treatment facilities can be sized for smaller flows. Also, in areas where water shortages occur, reuse is an effective means of conserving water.

Operational Factors. The hardware necessary for reuse of process wastewaters varies, depending on the specific application. The basic elements include pumps and piping. Chemical addition is not usually warranted, unless treatment is required prior to reuse. Maintenance and energy use are limited to that required by the pumps. Solid waste generated is dependent upon the type of treatment used and will be discussed separately with each unit process.

Countercurrent Cascade Rinsing

Rinsing is used to dilute the concentration of contaminants adhering to the surface of a workpiece to an acceptable level before the workpiece passes on to the next step in the cleaning or etching operation. The amount of water required to dilute the rinse solution depends on the quantity of chemical drag-in from the upstream rinse or cleaning or etching tank, the allowable concentration of chemicals in the rinse water, and the contacting efficiency between the workpiece and the water.

Process variations such as countercurrent cascade rinsing may cause a decrease in process water use. This technique reduces water use by multiple stage rinsing with a water flow counter to the movement of the workpiece. Clean water contacts the aluminum in the last rinse stage. The water, somewhat more contaminated,

is routed stage by stage up the rinsing line. After use in the first rinse stage, the contaminated water is discharged to treatment.

As an example, Figure VII-37 illustrates three rinsing operations, each designed to remove the residual acid in the water on the surface of a workpiece. In Figure VII-37a the piece is dipped into one tank with continuously flowing water. In this case, the acid on the surface of the workpiece is essentially diluted to the required level.

In Figure VII-37b, the first step towards countercurrent operation is taken with the addition of a second tank. The workpiece is now moving in a direction opposite to the rinse water. The piece is rinsed with fresh makeup water prior to moving down the assembly line. However, the fresh water from this final rinse tank is directed to a second tank, where it meets the incoming, more-contaminated workpiece. Fresh makeup water is used to give a final rinse to the article before it moves out of the rinsing section, but the slightly contaminated water is reused to clean the article just coming into the rinsing section. By increasing the number of stages, as shown in Figure VII-37c, further water reduction can be achieved. Theoretically, the amount of water required is the amount of acid being removed by single-stage requirements divided by the highest tolerable concentration in the outgoing rinsewater. This theoretical reduction of water by a countercurrent multistage operation is shown in the curve graph in Figure VII-38. The actual flow reduction obtained is a function of the dragout and the type of contact occurring in the tanks. If reasonably good contact is maintained major reductions in water use are possible.

Application and Performance. As mentioned above, rinse water requirements and the benefits of countercurrent rinsing may be influenced by the volume of solution dragout carried into each rinse stage by the material being rinsed, by the number of rinse stages used, by the initial concentrations of impurities being removed, and by the final product cleanliness required. The influence of these factors is expressed in the rinsing equation which may be stated simply as:

$$Vr = \left(\frac{Co}{Cf}\right)^{1/n} \times VD$$

Vr is the flow through each rinse stage.
Co is the concentration of the contaminant(s) in the initial process bath.
Cf is the concentration of the contaminant(s) in the final rinse to give acceptable product cleanliness.
n is the number of rinse stages employed.
VD is the dragout carried into each rinse stage, expressed as a flow.

For a multi-stage rinse, the total volume of rinse wastewater is equal to n times Vr while for a countercurrent rinse the total volume of wastewater discharge equals Vr.

To calculate the benefits of countercurrent rinsing for aluminum forming, it can be assumed that a two-stage countercurrent cascade rinse is installed after the cleaning or etching operations. The mass of aluminum in one square meter of sheet that is 6 mm (0.006 m) in thickness can be calculated using the density of aluminum, 2.64 kkg/m^3 (165 lbs/cu ft), as follows:

$$= (0.006\ m) \times (2.64\ kkg/m^3) = 0.016\ kkg/m^2 \text{ of sheet}$$

Using the mean cleaning or etching rinse water use from Table V-51 (p. 324), Vr can then be calculated as follows:

$$Vr = \left(0.016\ \frac{kkg}{m^2}\right) \times \left(32{,}380\ \frac{1}{kkg}\right) = 518.1\ 1/m^2 \text{ of sheet}$$

Drag-out is solution which remains on the surface of material being rinsed when it is removed from process baths or rinses. Without specific plant data available to determine drag-out, an estimate of rinse water reduction to be achieved with two-stage countercurrent rinsing can be made by assuming a thickness of any process solution film as it is introduced into the rinse tank. If the film on a piece of aluminum sheet is 0.015 mm (0.6 mil) thick, (equivalent to the film on a well-drained vertical surface) then the volume of process solution, VD, carried into the rinse tank on one square meter of sheet will be:

$$VD = (0.015\ mm) \times \left(\frac{1}{1000}\ m/mm\right) \times (1000\ 1/m^3)$$

$$= 0.015\ 1/m^2 \text{ of sheet}$$

Let $r = \frac{Co}{Cf}$, then $r^{1/n} = \frac{Vr}{VD}$.

For single stage rinsing n = 1, therefore $r = \frac{Vr}{VD}$

and $r = \frac{518.1}{0.015} = 34{,}540$

For a 2-stage countercurrent cascade rinse to obtain the same r, that is the same product cleanliness,

$$\frac{Vr}{VD} = r^{1/2}, \text{ therefore } \frac{Vr}{VD} = 185.8$$

But VD = 0.015 $1/m^2$ of sheet,

therefore for 2-stage countercurrent cascade rinsing Vr is:

$$Vr = 185.8 \times 0.015 = 2.79 \ 1/m^2 \text{ of sheet}$$

In this theoretical calculation, a flow reduction of 99.5 percent can be achieved. The actual numbers may vary depending on efficiency of squeegees or air knives, and the rinse ratio desired.

Advantages and Limitations. Significant flow reductions can be achieved by the addition of only one additional stage in the rinsing operation, as discussed above. As shown in Figure VII-38 the largest reductions are made by adding the first few stages. Additional rinsing stages cost additional money. The actual number of stages added depends on site-specific layout and operating conditions. With higher costs for water and waste treatment, more stages might be economical. With very low water costs, fewer stages would be economical. In considering retrofit applications, the space available for additional tanks is also important. Many other factors will affect the economics of countercurrent cascade rinsing; an evaluation must be done for each individual plant.

Operational Factors. If the flow from stage to stage can be effected by gravity, either by raising the latter rinse stage tanks or by varying the height of the overflow weirs, countercurrent cascade rinsing is usually quite economical. If, on the other hand, pumps and level controls must be used, then another method, such as spray rinsing, may be more feasible.

Another factor is the need for agitation, which will reduce short circuiting of the flow. Large amounts of short circuiting can reduce the flow reduction attained by adding more stages. In cases where water is cascading in enormous quantities over a workpiece, the high flow usually provides enough agitation. As more staging is applied to reduce the amount of water, the point will be reached where the flow of the water itself is not sufficient to provide agitation. This necessitates either careful baffling of the tanks or additional mechanical agitation.

Demonstration Status. Countercurrent cascade rinsing has been widely used as a flow reduction technique in the metal finishing industry. In aluminum conversion coating lines that are subject to the coil coating limitations, countercurrent cascade rinsing is currently used in order to reduce costs of wastewater treatment systems (through smaller systems) for direct dischargers and to reduce sewer costs for indirect dischargers.

Countercurrent cascade rinsing is currently practiced at two aluminum forming plants. In addition, although not strictly countercurrent rinsing, two plants reuse the rinse water following one etch bath for the rinse of a preceding bath. Based on plant visits to 22 aluminum forming sites, the Agency believes that there is enough available floorspace for the installation of countercurrent cascade rinsing technology at existing sources.

Regeneration of Chemical Baths

Regeneration of chemicals baths is used to remove contaminants and recover and reuse the bath chemicals, thus minimizing the chemical requirements of the bath while achieving zero discharge.

Application and Performance. Chemical bath regeneration is applicable to recover and reuse chemicals associated with caustic cleaning or etching baths, sulfuric acid etching, conversion coating or anodizing baths, chromic acid etching, conversion coating or anodizing baths, and alkaline cleaning baths.

Some metal salts can be precipitated out of chemical baths by applying a temperature change or shift to the bath. Once the metal salts are precipitated out of solution the chemical properties and utility of the bath can then be restored by adding fresh chemicals. The addition of lime may aid in precipitating dissolved metals by forming carbonates.

Ultrafiltration, previously discussed in this section, can be used to remove oils and particulates from alkaline cleaning baths, allowing the recovery of the water and alkali values to be reused in the make-up of fresh bath rather than treated and discharged.

Ultrafiltration membranes allow only low molecular weight solutes and water to pass through and return to the bath; particulates and oils are held back in a concentrated phase. The concentrated material is then disposed of separately as a solid waste.

Advantages and Limitations. The advantages of bath regeneration are: (1) it results in zero discharge of the chemical bath water; (2) the cleaning or etching operations are made more efficient because the bath can be kept at a relatively constant strength; (3) it results in reduced maintenance labor associated with the bath; and (4) it reduces chemical costs by recovering chemicals and increasing bath life.

Operational Factors. Reliability and Maintainability: Chemical bath regeneration results in lower maintenance labor because the bath life is extended. Regeneration also increases the process reliability in that it eliminates extended periods of downtime to dump the entire bath solution.

It may be necessary to allow baths normally operated at elevated temperatures to cool prior to regeneration. As an example, hot detergent baths will require cooling prior to introducing material into the ultrafiltration membrane.

Solid Waste Aspects: Regeneration of caustic detergent chromic acid and sulfuric acid baths results in the formation of precipitates. These precipitates are collected, dewatered, if necessary, and then disposed of as solid wastes. The aluminum sulfate precipitate resulting from sulfuric acid baths may be commercially marketable. The solid waste aspects of wastewater treatment sludges similar to regeneration sludges are discussed in detail in Section VIII (p. 781).

Demonstration Status. Fifteen aluminum forming plants achieve zero discharge through chemical bath regeneration. These plants achieve this by periodically supplementing the caustic and acid baths. There are commercial processes available for regenerating baths which are patented or claimed confidential. In general, these regeneration processes are based on the fundamental concepts described above.

As discussed previously in this section, ultrafiltration is well developed and commercially available for recovery of high molecular weight liquids and solid contaminants. EPA is not aware of any aluminum forming plants that have applied ultrafiltration for the purpose of regenerating bath materials. There are two aluminum forming plants using ultrafiltration to recover spent lubricant. Performance data for these two systems is shown in Table VII-28. Since alkaline cleaning baths are used to remove these lubricants from the aluminum surface prior to further processing, it is reasonable to assume that ultrafiltration will be equally applicable for separating these same lubricants from alkaline cleaning baths.

Process Water Use Reduction

Process water use reduction is the decrease in the amount of process water used as an influent to a production process per unit of production. Section V discuses water use in detail for each aluminum forming operation. A range of water use values taken from the data collection portfolios is presented for each operation. The range of values indicates that some plants use process water more efficiently than others for the same operation. Therefore, some plants can curb their water use; in some cases it may be as simple as turning down a few valves.

Noncontact cooling water may replace contact cooling water in some applications; air cooling may also be an alternative to contact cooling water. Conversion to dry air pollution control equipment, discussed further on in this section, is another way to reduce water use.

Wastewater Segregation

Application and Performance. The segregation of process waste streams is a valuable control techology and may reduce treatment costs. Individual process waste streams may exhibit very different chemical characteristics, and separating the streams may permit applying the most effective method of treatment or disposal to each stream. Relatively clean waters, such as annealing atmosphere scrubber liquor, should be kept segregated from contaminated streams. Dissimilar streams should not be combined, e.g., an oily stream such as direct chill casting contact cooling water should not be combined with a non-oily stream such as cleaning or etching scrubber liquors. Segregation should be based on the type of treatment to be performed for a given pollutant, avoiding oversizing of equipment for treating flows unnecessarily.

Consider two waste streams, one high in chromium and other dissolved solids; the other, a noncontact cooling water without chromium. Significant advantages exist in segregating these two waste streams. If the combined waste streams are being treated to reduce chromium, the resulting high treatment cost will be impractical. Also, if chromium removal by lime precipitation is being practiced, reduced removal efficiencies will result from combining the waste streams due to dilution of chromium concentration. In addition, recycle of the noncontact cooling water will be made difficult by mixing the relatively pure noncontact cooling water with the high dissolved solids stream. Many combinations of waste streams exist throughout the aluminum forming industry where segregation affords distinct advantages.

Equipment necessary for wastewater segregation may include piping, curbing, and possibly pumping. Chemicals are not needed and maintenance and energy use is limited to the pumps.

Advantages. The segregation of stormwater runoff from process-related streams can eliminate overloading of sewer and treatment facilities. Some plants located lower than the surrounding terrain have built flood control dams at higher elevations to minimize the passage of stormwater runoff onto plant property. The use of curbing is an excellent control practice for minimizing the commingling of runoff with process wastewaters. Also, retention ponds should be lined to minimize infiltration of spring water during periods of local flooding and exfiltration of the wastewaters to a nearby aquifer.

Lubricating Oil and Deoiling Solvent Recovery

Application and Performance. The recycle of lubricating oils is a common practice in the industry. The degree of recycle is dependent upon any in-line treatment, e.g., filtration to remove aluminum fines and other contaminants, and the useful life of the

specific oil in its application. Usually, this involves continuous recirculation of the oil, with losses in the recycle loop from evaporation, oil carried off by the aluminum, and minor loses from in-line treatment. Some plants periodically replace the entire batch of oil once its required properties are depleted. In other cases, a continuous bleed or blowdown stream of oil is withdrawn from the recycle loop to maintain a constant level of oil quality. Fresh make-up oil is added to compensate for the blowdown and other losses, and in-line filtration is used between cycles.

Reuse of oil from spent emulsions used in aluminum rolling and drawing is practiced at some plants. The free oil skimmed from gravity oil and water separation, following emulsion breaking, is valuable. This free oil contains some solids and water which must be removed before the oil can be reused. The traditional treatment involves acidifying the oil in a heated cooker, using steam coils or live steam to heat the oil to a rolling boil. When the oil is sufficiently heated, the steam is shut off and the oil and water are permitted to separate. The collected floating oil layer is suitable for use as supplemental boiler fuel or for some other type of in-house reuse. Other plants choose to sell their oily wastes to oil scavengers, rather than reclaiming the oil themselves. The water phase from this operation is either sent to treatment or, if of a high enough quality, it can be recycled and used to make up fresh emulsion.

Advantages. Some plants collect and recycle rolling oils via mist eliminators. In the rolling process, oils are sprayed as a fine mist on the rollers for cooling and lubricating purposes, and some of this oil becomes airborne and may be lost via exhaust fans or volatilization. With the rising price of oils, it is becoming a more common practice to prevent these losses. Another reason for using hood and mist eliminators is the improvement in the working environment.

Demonstration Status and Operational Factors. Using organic solvents to deoil or degrease aluminum is usually performed prior to sale or subsequent operations such as coating. Recycling the spent solvent can be economically attractive along with its environmental advantages. Some plants (seven out of 30) are known to use distillation units to reclaim spent solvent for recycling. Sludges are normally disposed of by contractor hauling, although some plants may incinerate this waste. Of the 30 plants currently performing aluminum degreasing with organic solvents, two plants are known to discharge part of their spent solvent and oil mixtures to a POTW.

Dry Air Pollution Control Devices

Application and Performance. The use of dry air pollution control devices would allow the elimination of waste streams with high pollution potentials. The choice of air pollution control

equipment is complicated, and sometimes a wet system is the necessary choice. The important difference between wet and dry devices is that wet devices control gaseous pollutants as well as particulates.

Wet devices may be chosen over dry devices when any of the following factors are found: (1) the particle size is predominantly under 20 microns, (2) flammable particles or gases are to be treated at minimal combustion risk, (3) both vapors and particles are to be removed from the carrier medium, and (4) the gases are corrosive and may damage dry air pollution control devices.

Equipment for dry control of air emissions includes cyclones, dry electrostatic precipitators, fabric filters, and afterburners. These devices remove particulate matter, the first three by entrapment and the afterburners by combustion.

Afterburner use is limited to air emissions consisting mostly of combustible particles. Characteristics of the particulate-laden gas which affect the design and use of a device are gas density, temperature, viscosity, flammability, corrosiveness, toxicity, humidity, and dew point. Particulate characteristics which affect the design and use of a device are particle size, shape, density, resistivity, concentration, and other physiochemical properties.

Melting prior to casting requires wet air pollution control only when chlorine gas is present in the offgases. Dry air pollution control methods with inert gas or salt furnace fluxing have been demonstrated in the industry. It is possible to perform all the metal treatment tasks of removing hydrogen, non-metallic inclusions, and undesirable trace elements and meet the most stringent quality requirements without furnace fluxing, using only in-line metal treatment units. To achieve this, the molten aluminum is treated in the transfer system between the furnace and casting units by flowing the metal through a region of very fine, dense, mixed-gas bubbles generated by a spinning rotor or nozzle. No process wastewater is generated in this operation. A schematic diagram depicting the spinning nozzle refining principle is shown in Figure VII-39. Another similar alternate degassing method is to replace the chlorine-rich degassing agent with a mixture of inert gases and a much lower proportion of chlorine. The technique provides adequate degassing while permitting dry scrubbing.

Scrubbers must be used in forging because of the potential fire hazard of baghouses used in this capacity. The oily mist generated in this operation is highly flammable and also tends to plug and bind fabric filters, reducing their efficiency.

Caustic etch and extrusion die cleaning wet air pollution control is necessary due to the corrosive nature of the gases.

Advantages and Limitations. Proper application of a dry control device can result in particulate removal efficiencies greater than 99 percent by weight for fabric filters, elecrtrostatic precipitators, and afterburners, and up to 95 percent for cyclones.

Common wet air pollution control devices are wet electrostatic precipitators, venturi scrubbers, and packed tower scrubbers. Collection efficiency for gases will depend on the solubility of the contaminant in the scrubbing liquid. Depending on the contaminant removed, collection efficiencies ususally approach 99 percent for particles and gases.

Demonstration Status. The aluminum forming industry reports the use of dry air pollution controls for degassing and forging.

Good Housekeeping

Good housekeeping and proper equipment maintenance are necessary factors in reducing wastewater loads to treatment systems. Control of accidental spills of oils, process chemicals, and wastewater from washdown and filter cleaning or removal can aid in abating or maintaining the segregation of wastewater streams. Curbed areas should be used to contain or control these wastes.

Leaks in pump casings, process piping, etc., should be minimized to maintain efficient water use. One particular type of leakage which may cause a water pollution problem is the contamination of noncontact cooling water by hydraulic oils, especially if this type of water is discharged without treatment.

Good housekeeping is also important in chemical, solvent, and oil storage areas to preclude a catastrophic failure situation. Storage areas should be isolated from high fire-hazard areas and arranged so that if a fire or explosion occurs, treatment facilities will not be overwhelmed nor excessive groundwater pollution caused by large quantities of chemical-laden fire-protection water.

Bath or rinse waters that drip off the aluminum while it is being transferred from one tank to another (dragout) should be collected and returned to their originating tanks. This can be done with simple drain boards.

A conscientiously applied program of water use reduction can be a very effective method of curtailing unnecessary wastewater flows. Judicious use of washdown water and avoidance of unattended running hoses can significantly reduce water use.

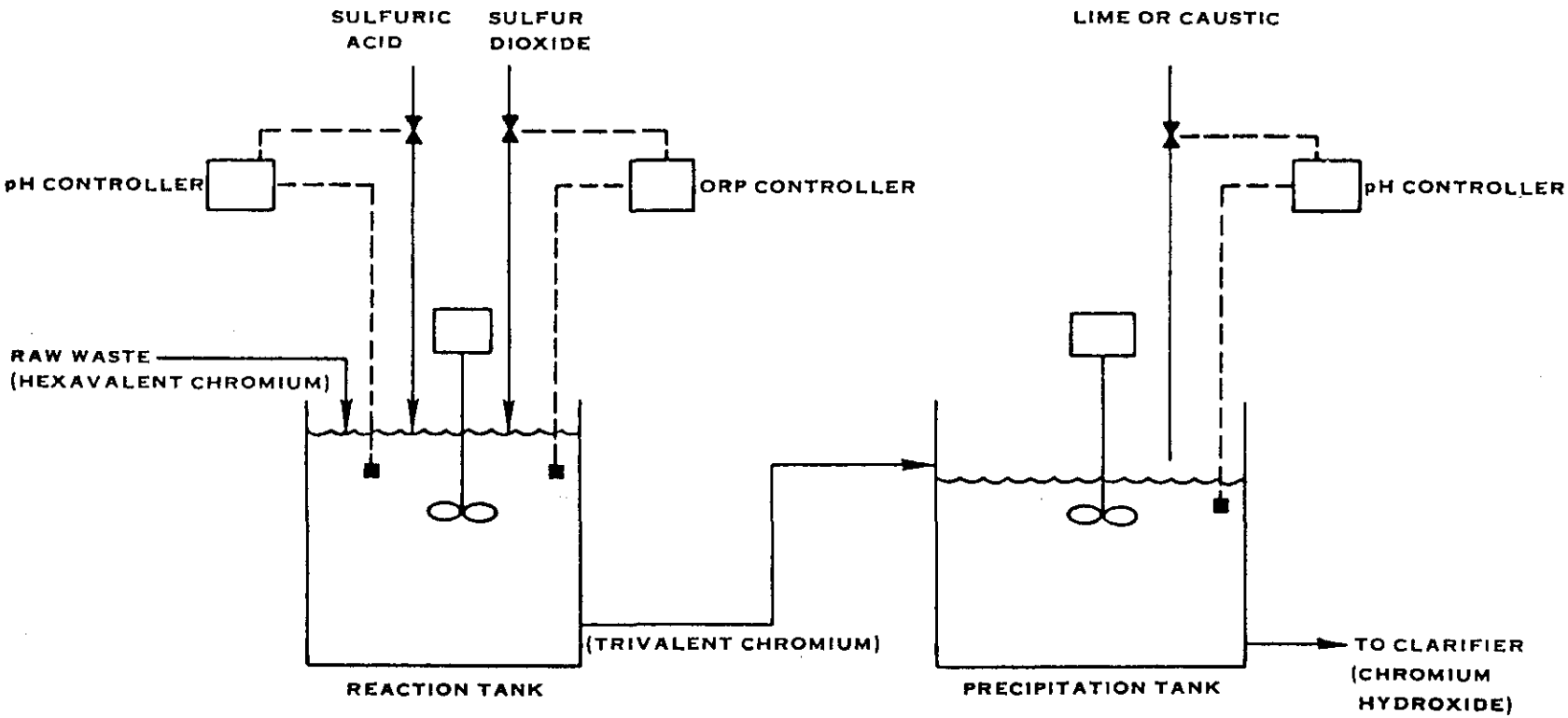

Figure VII-1

HEXAVALENT CHROMIUM REDUCTION WITH SULFUR DIOXIDE

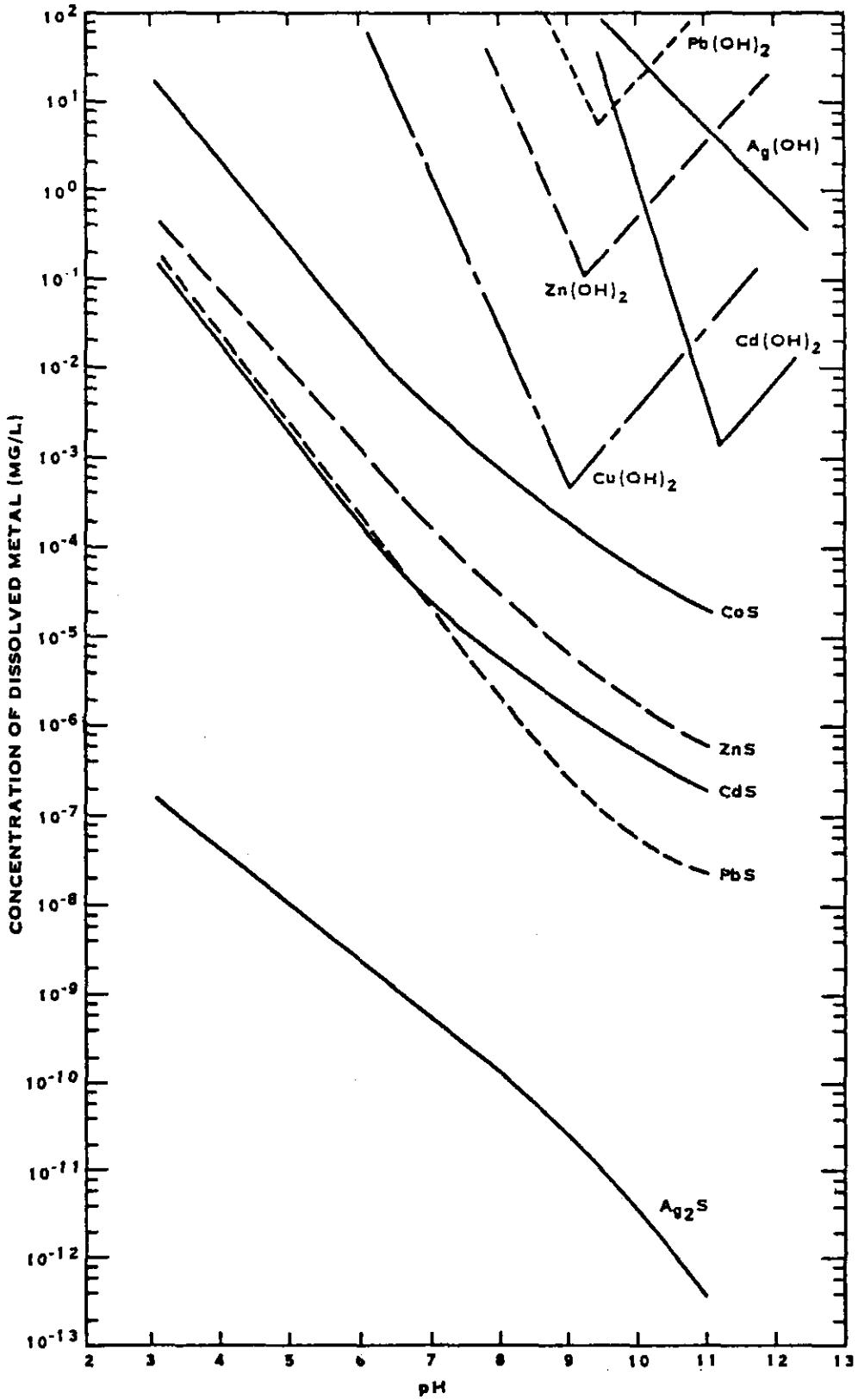

Figure VII-2

COMPARATIVE SOLUBILITIES OF METAL HYDROXIDES AND SULFIDE AS A FUNCTION OF pH

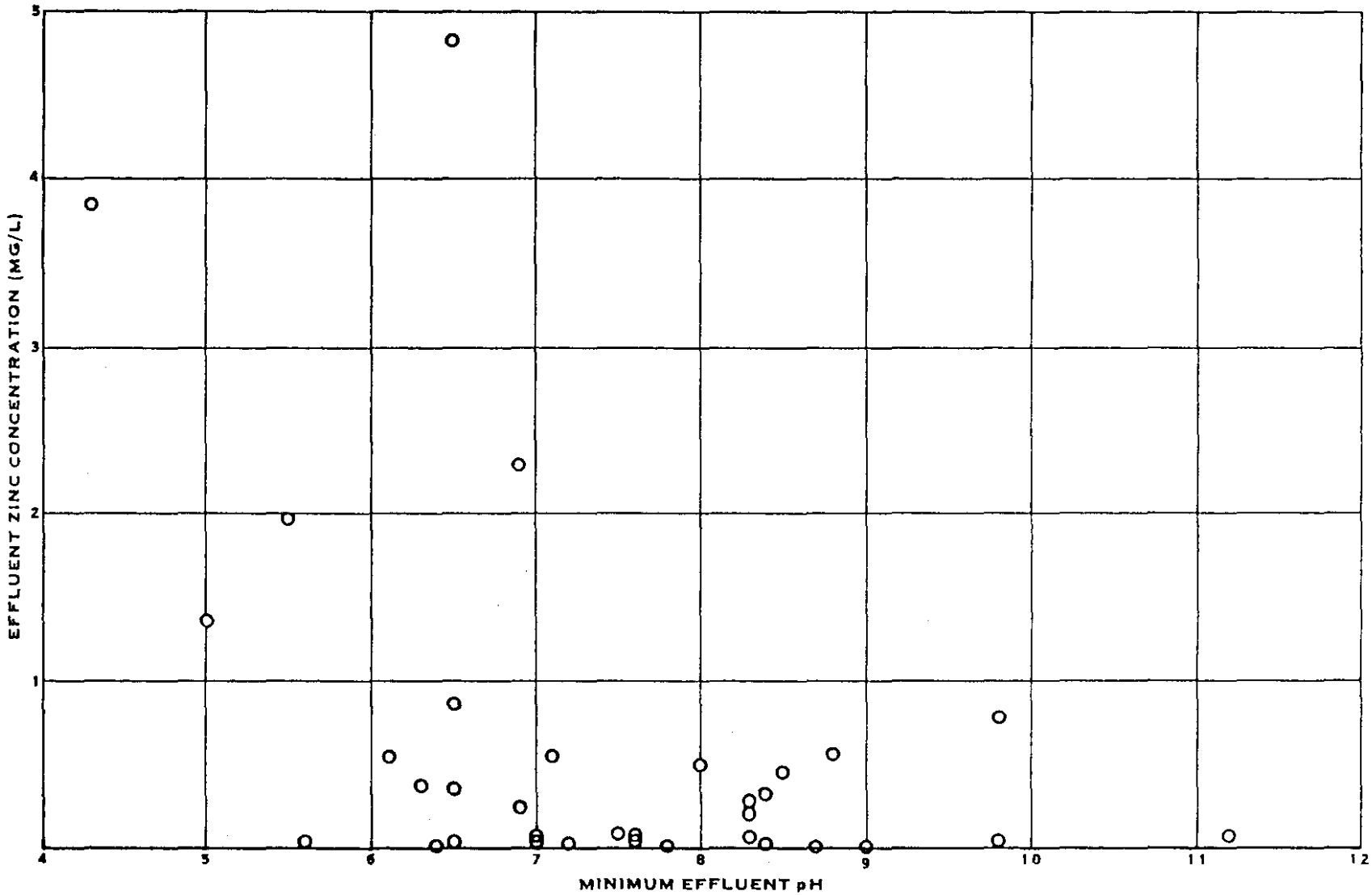

Figure VII-3

EFFLUENT ZINC CONCENTRATION VS. MINIMUM EFFLUENT pH

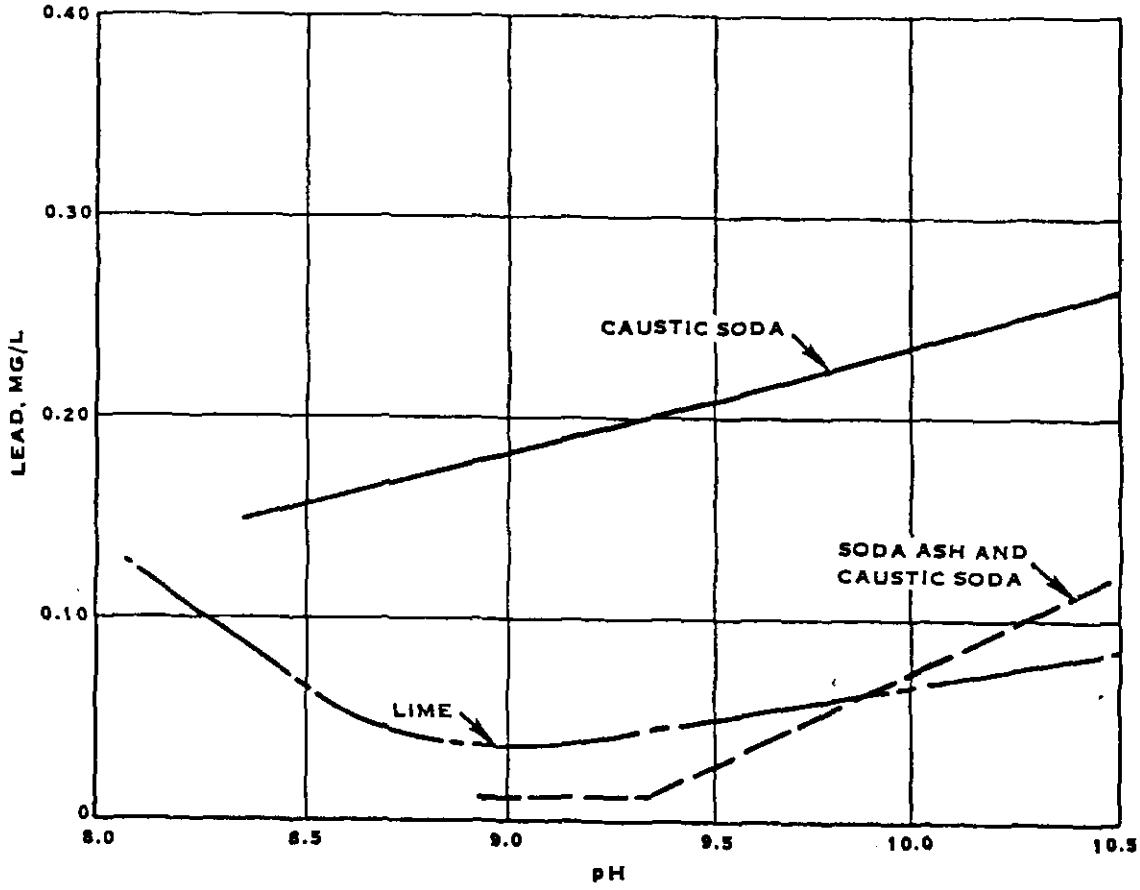

Figure VII-4

LEAD SOLUBILITY IN THREE ALKALIES

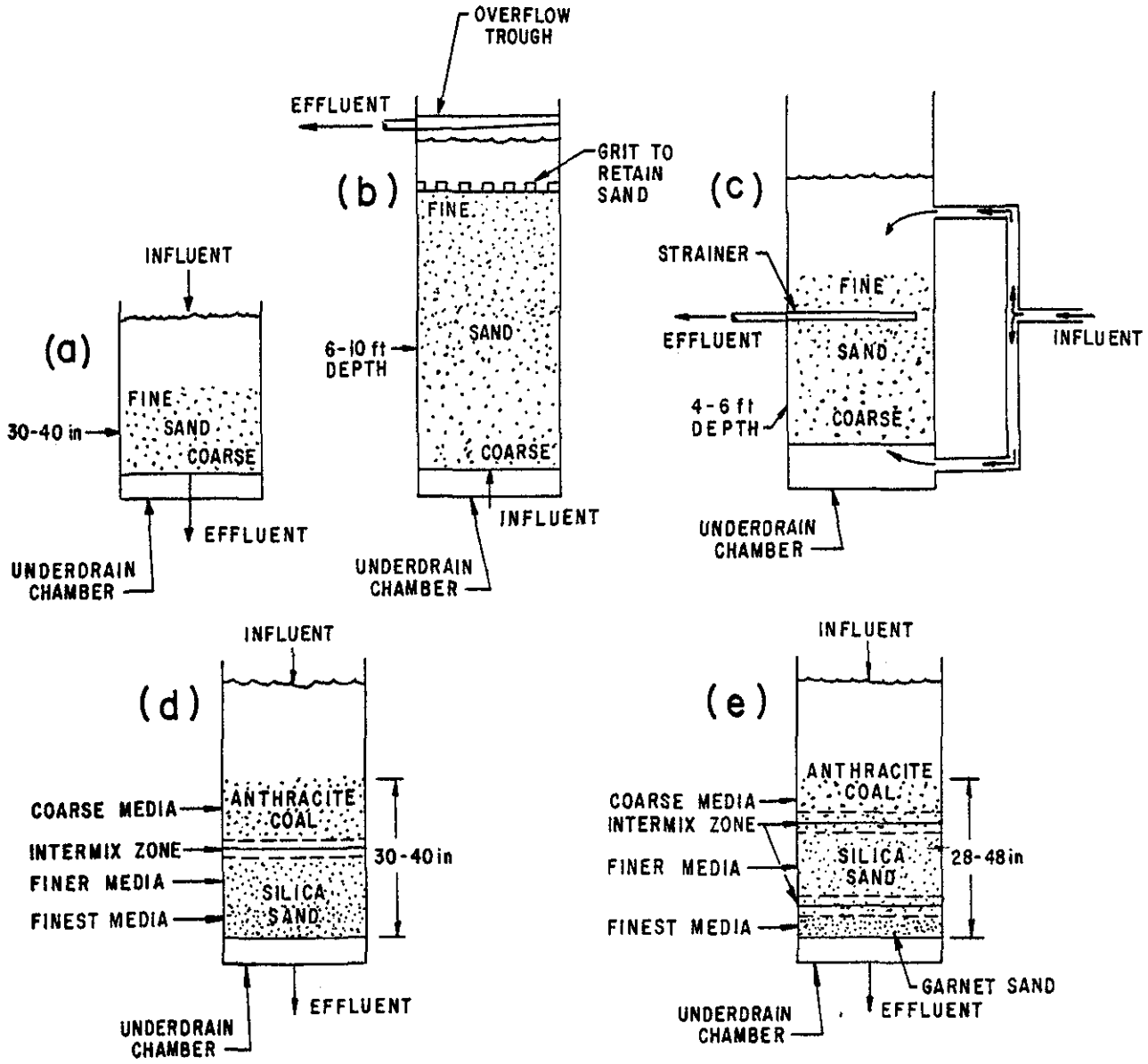

Figure VII-5

FILTER CONFIGURATIONS

(a) Single-Media Conventional Filter.
(b) Single-Media Upflow Filter.
(c) Single-Media Biflow Filter.
(d) Dual-Media Filter.
(e) Mixed-Media (Triple-Media) Filter.

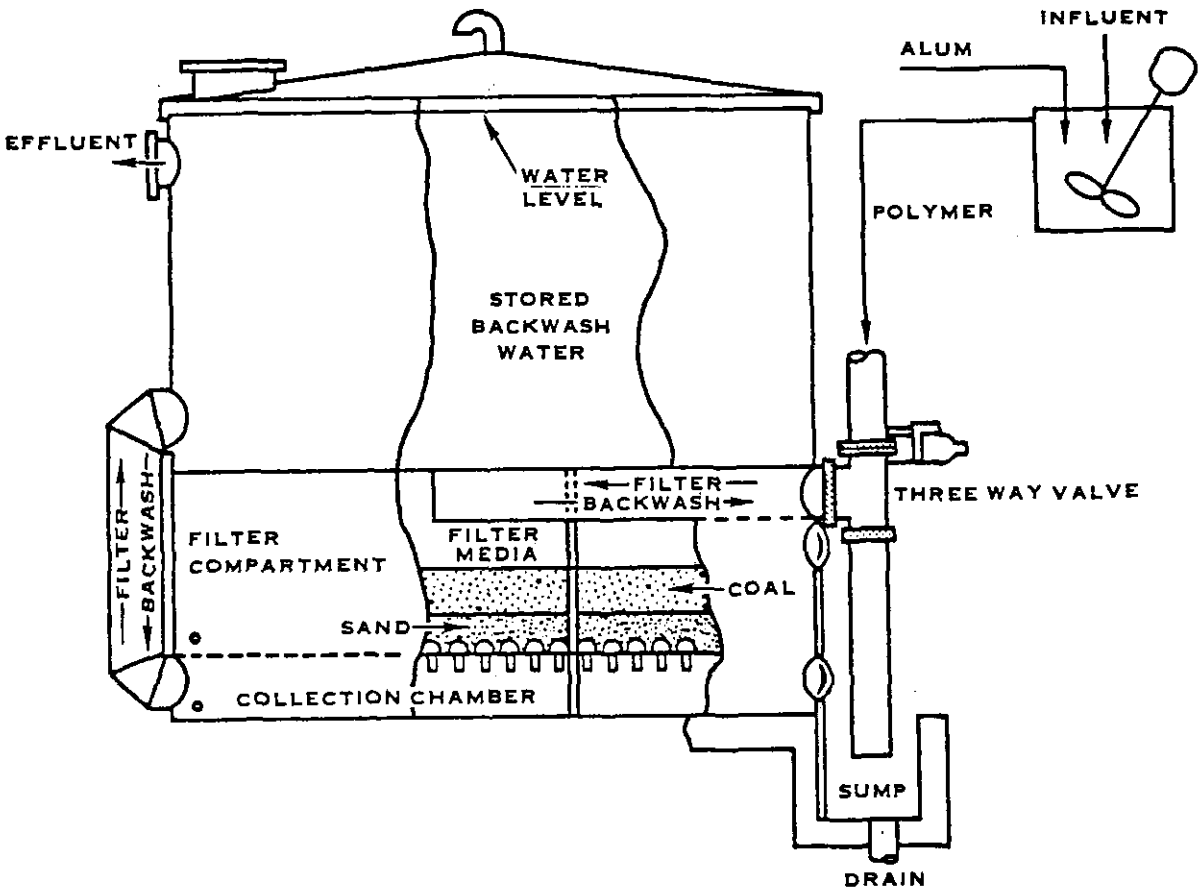

Figure VII-6

GRANULAR BED FILTRATION

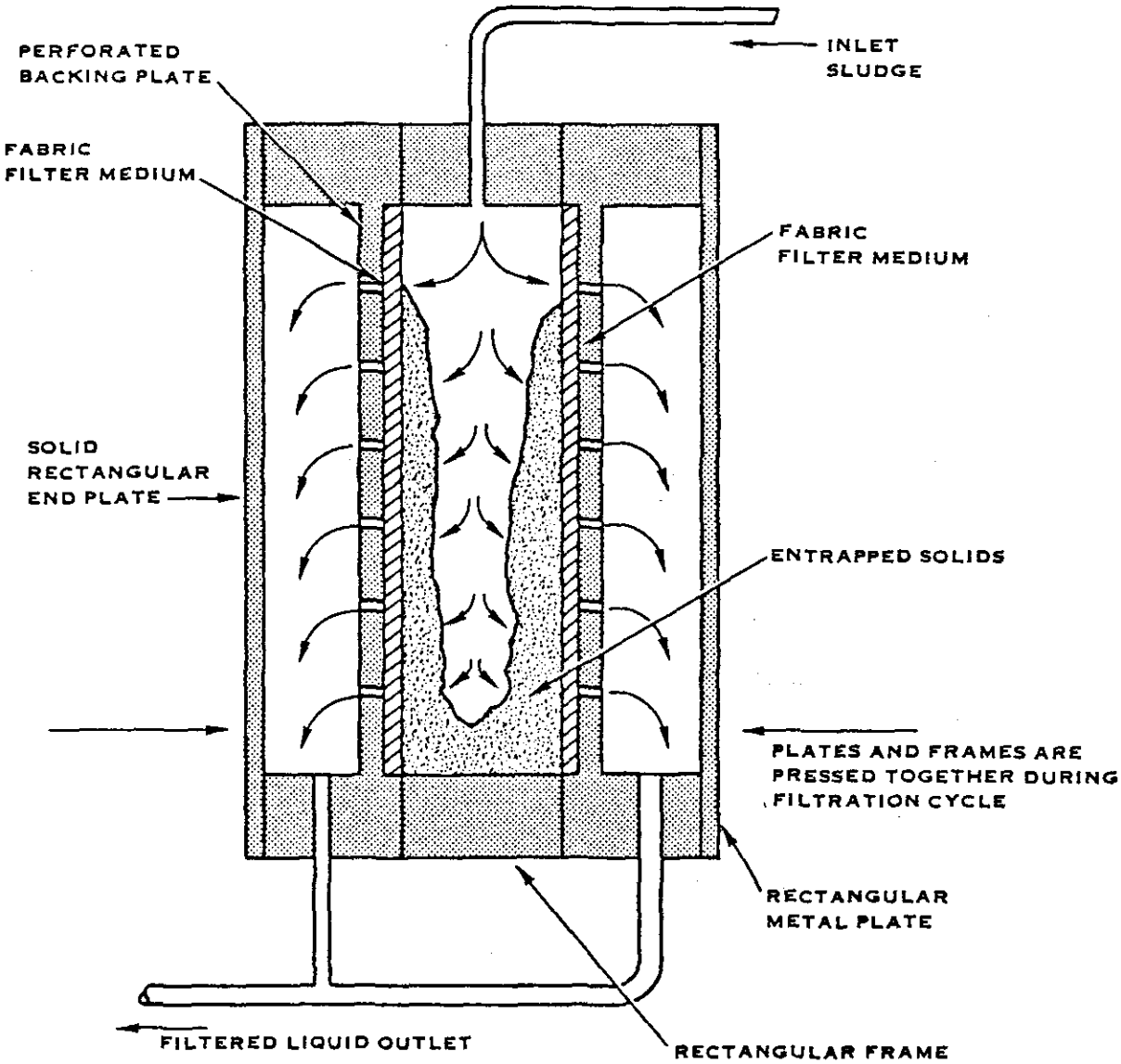

Figure VII-7

PRESSURE FILTRATION

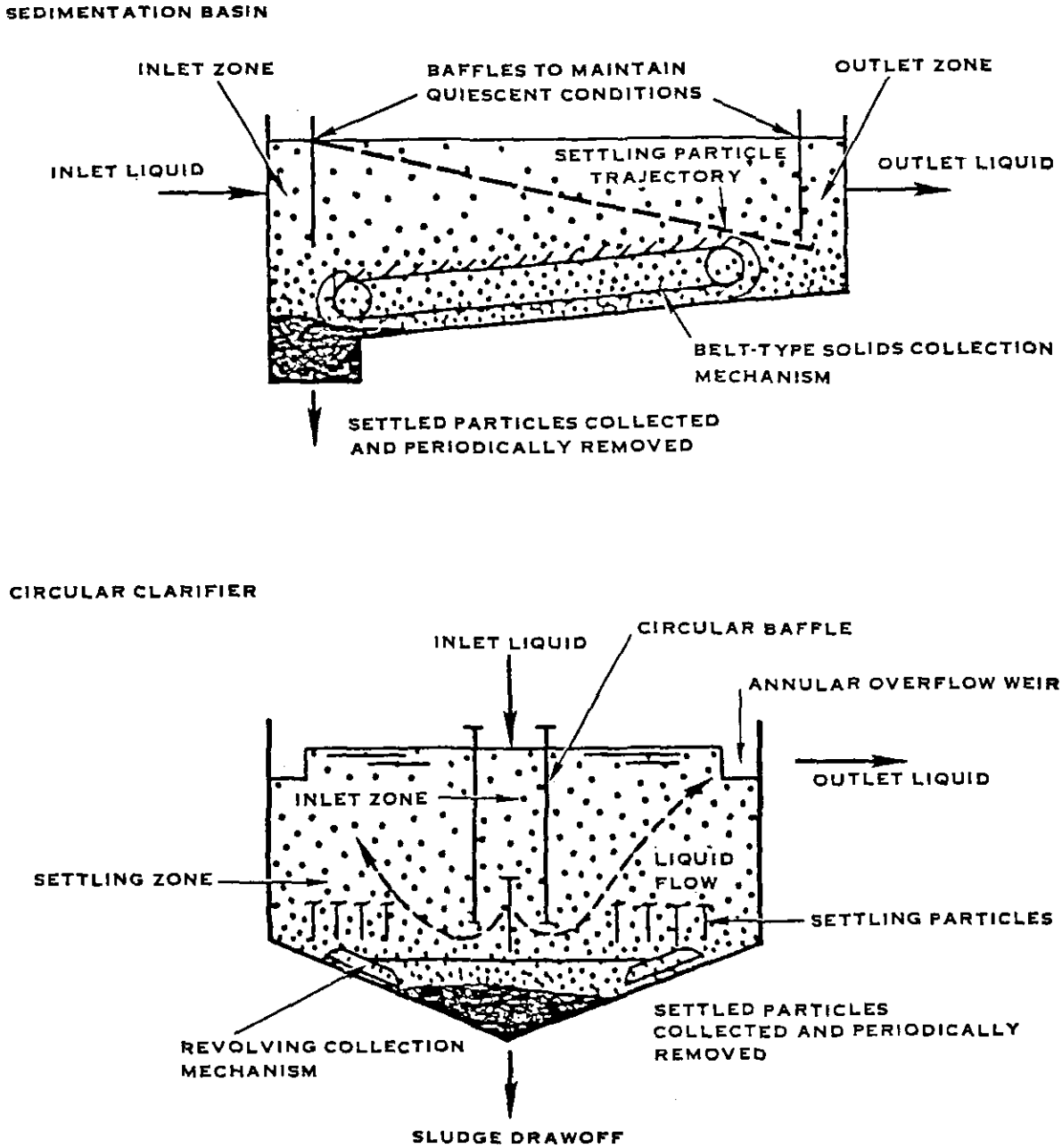

Figure VII-8

REPRESENTATIVE TYPES OF SEDIMENTATION

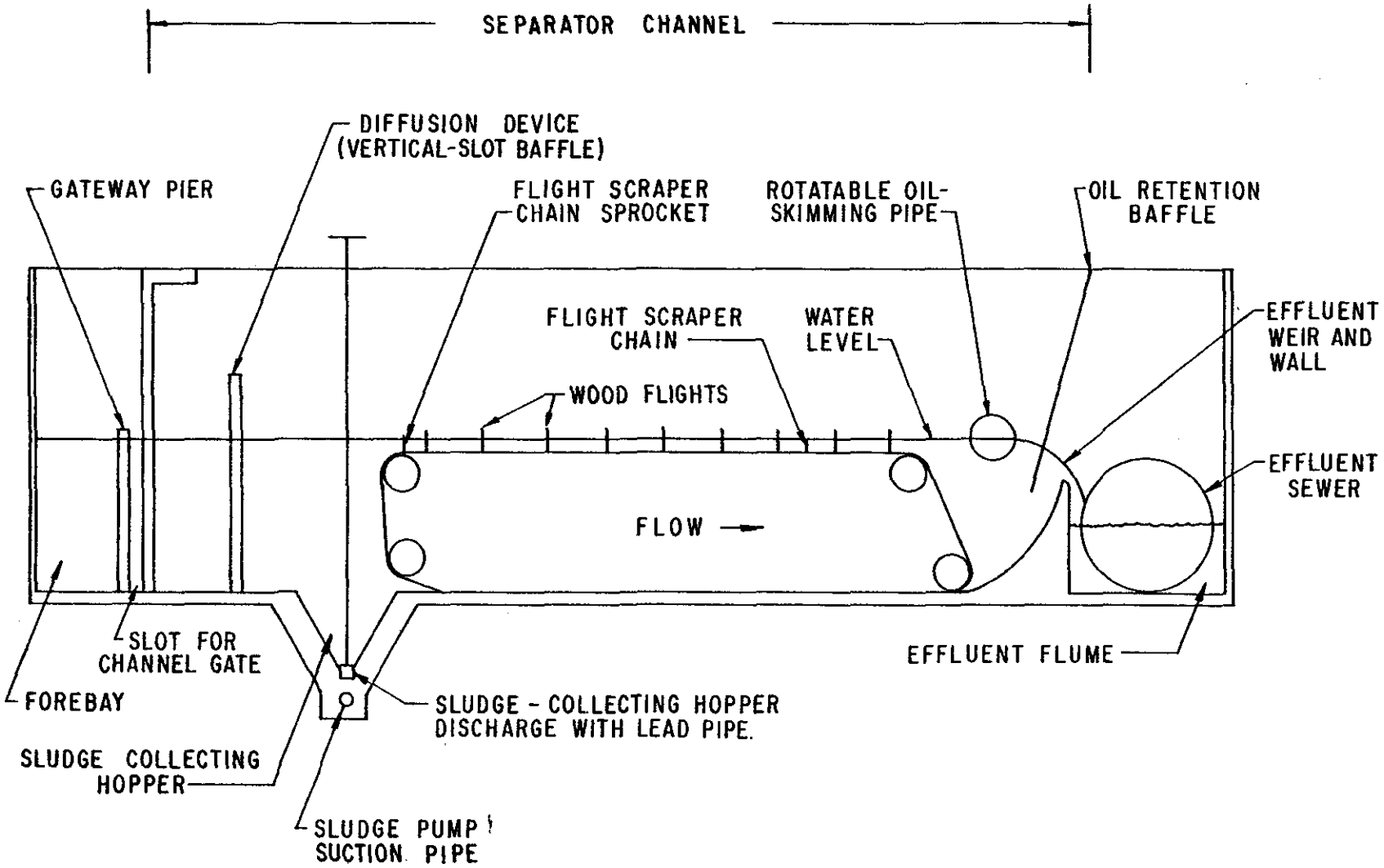

Figure VII-9

GRAVITY OIL/WATER SEPARATOR

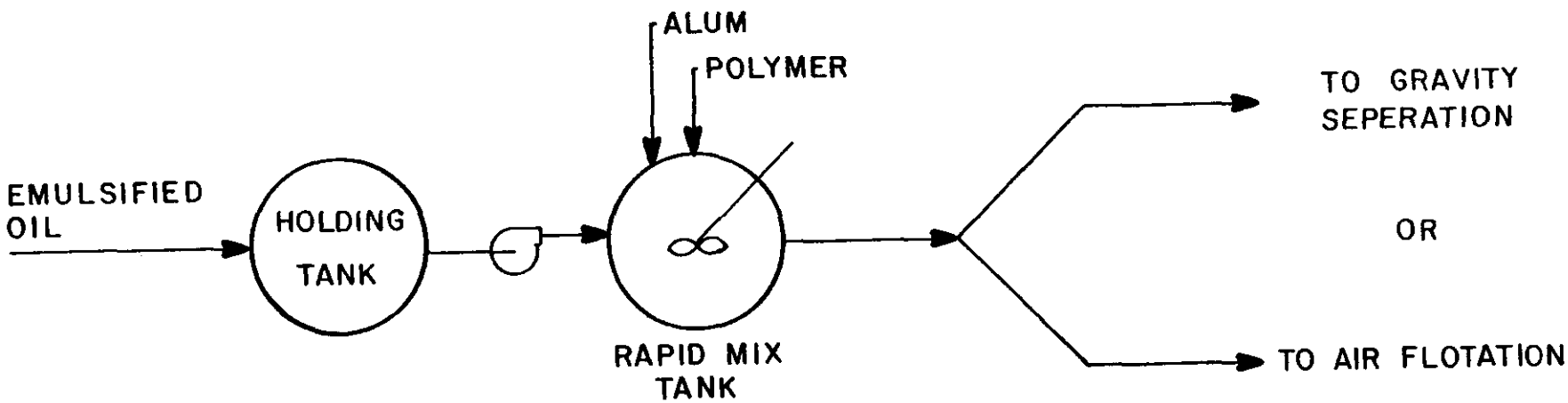

Figure VII-10

FLOW DIAGRAM FOR EMULSION BREAKING WITH CHEMICALS

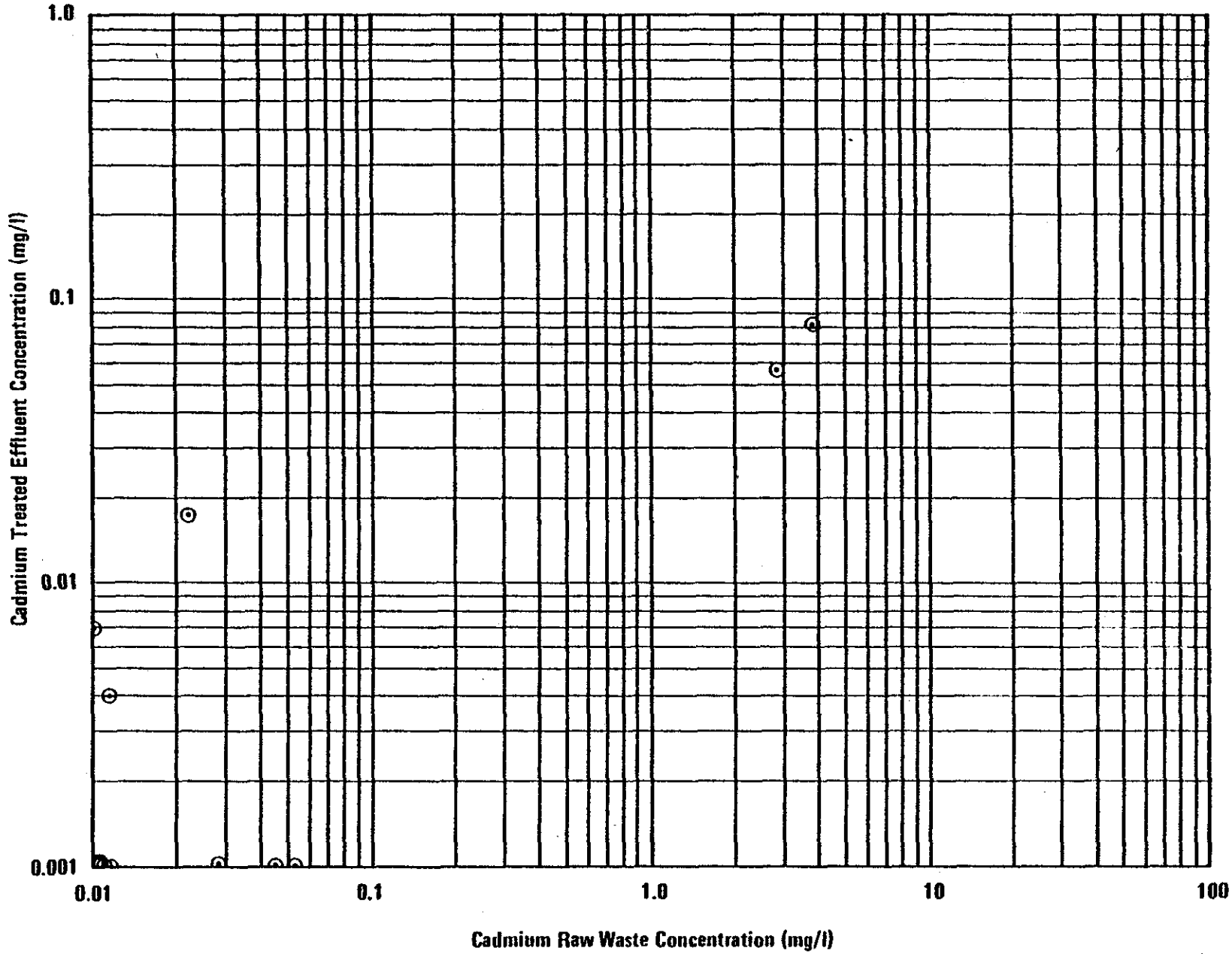

Data points with a raw waste concentration less than 0.1 mg/l were not included in treatment effectiveness calculations.

(Number of observations = 2)

FIGURE VII – 11
HYDROXIDE PRECIPITATION SEDIMENTATION EFFECTIVENESS
CADMIUM

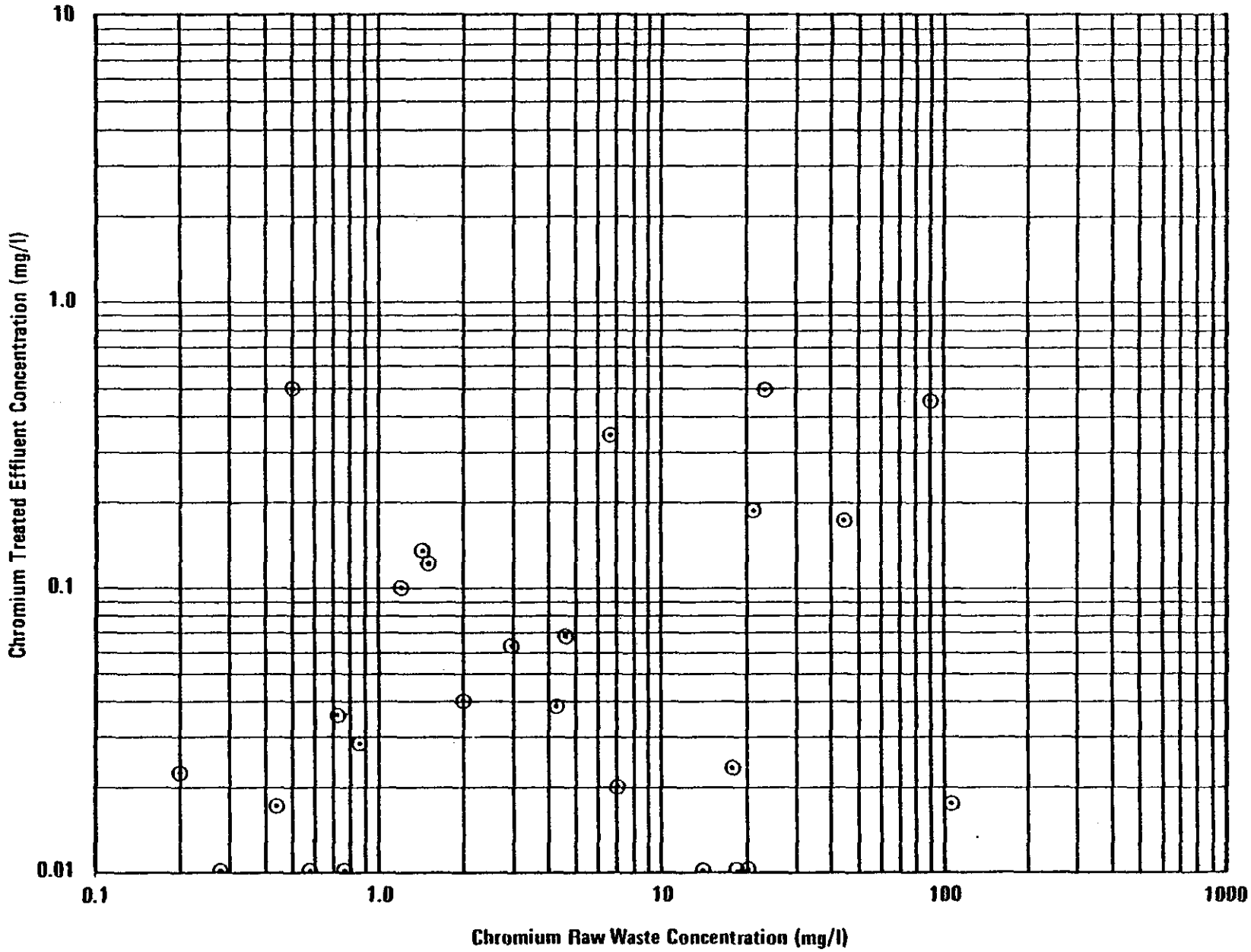

(Number of observations = 26)

FIGURE VII-12
HYDROXIDE PRECIPITATION SEDIMENTATION EFFECTIVENESS
CHROMIUM

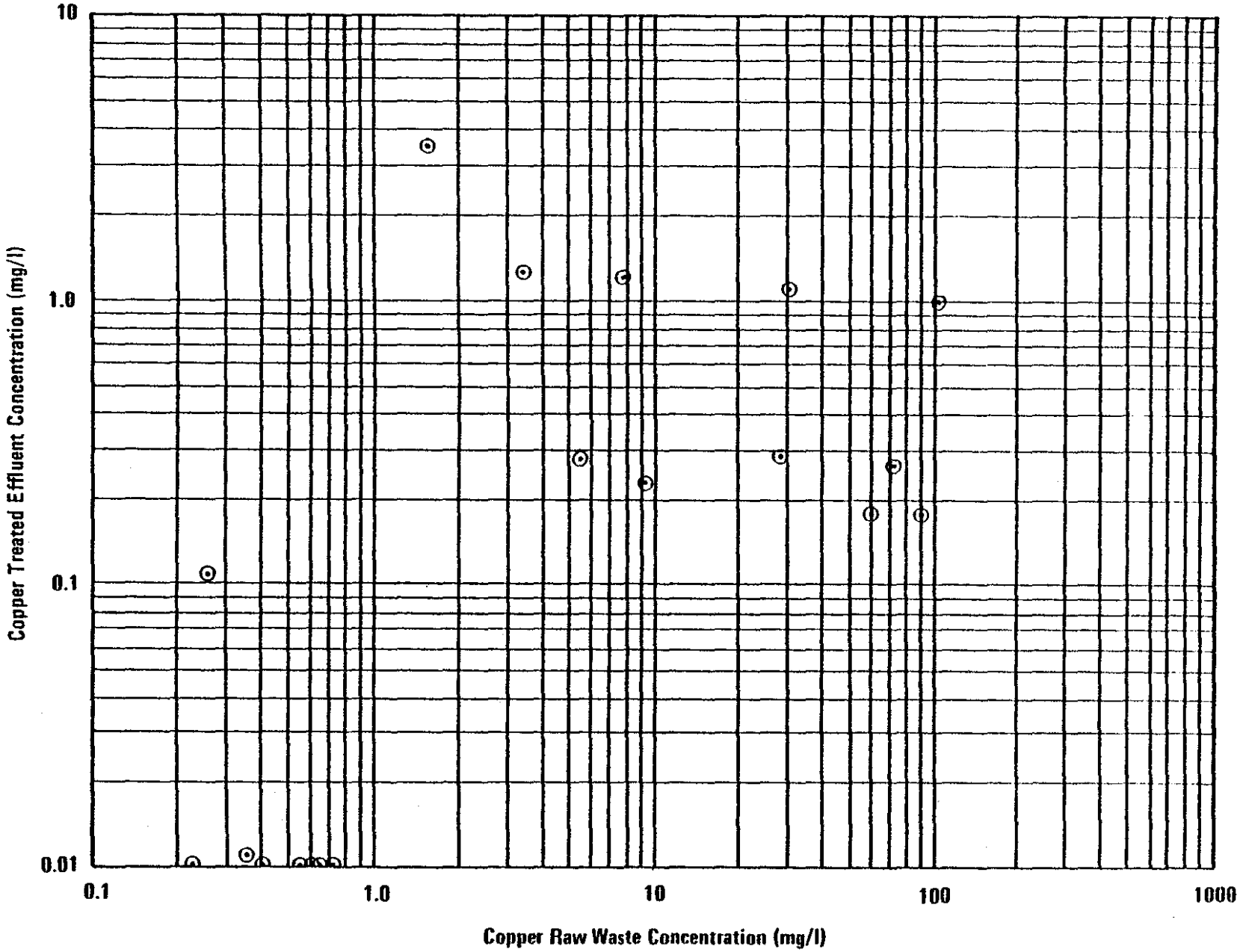

(Number of observations = 19)

FIGURE VII-13
HYDROXIDE PRECIPITATION SEDIMENTATION EFFECTIVENESS
COPPER

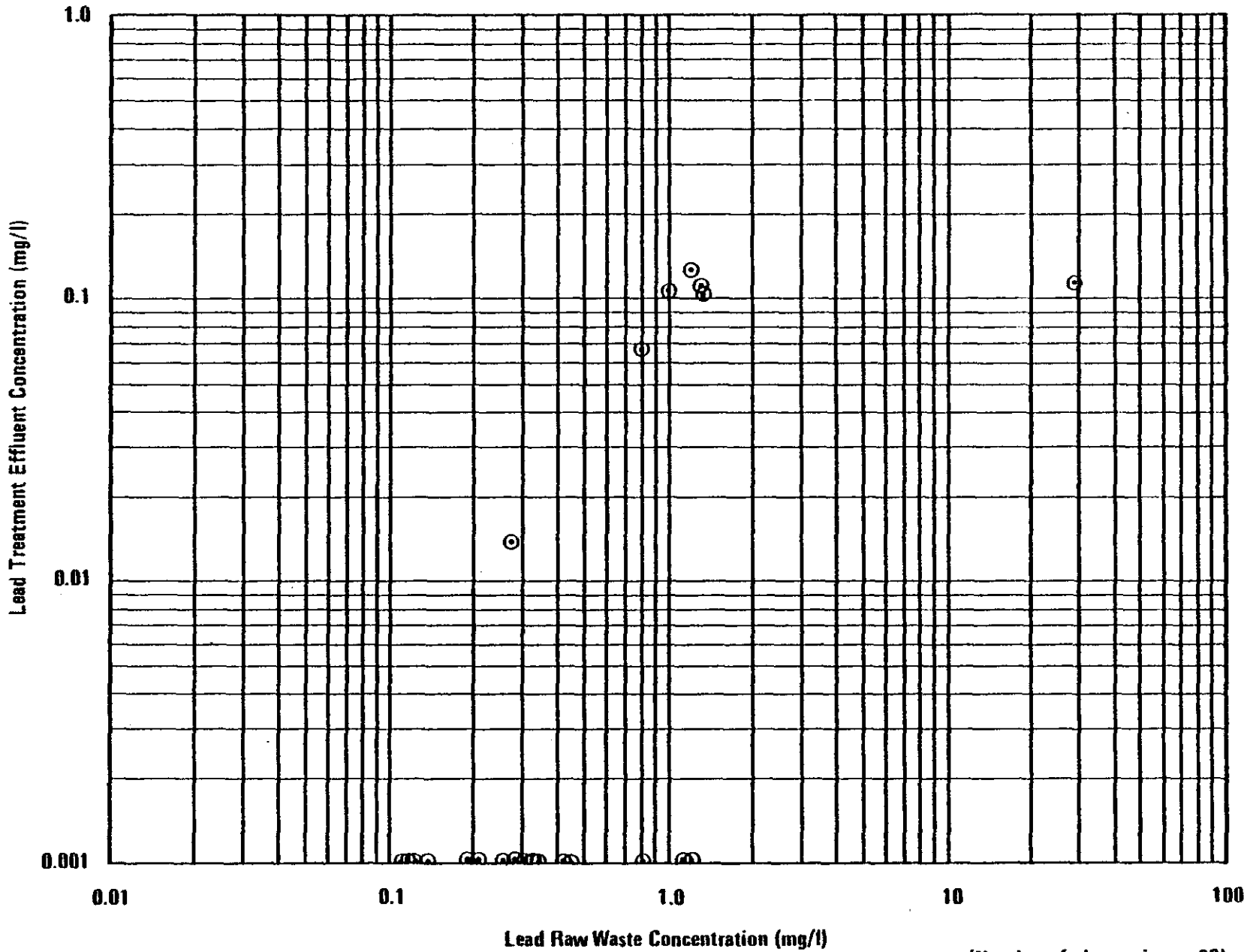

(Number of observations = 23)

FIGURE VII – 14
HYDROXIDE PRECIPITATION SEDIMENTATION EFFECTIVENESS
LEAD

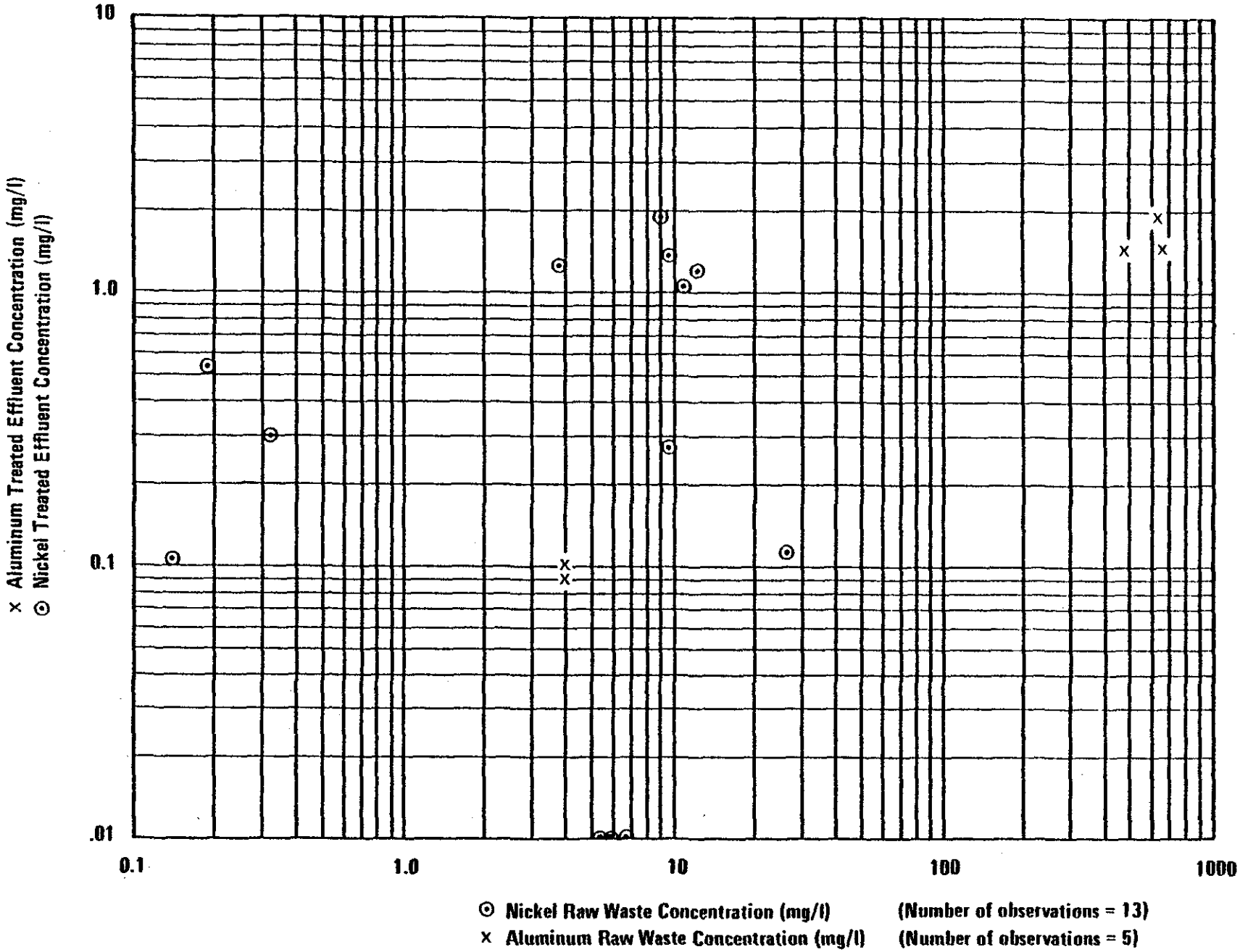

FIGURE VII-15
HYDROXIDE PRECIPITATION SEDIMENTATION EFFECTIVENESS
NICKEL AND ALUMINUM

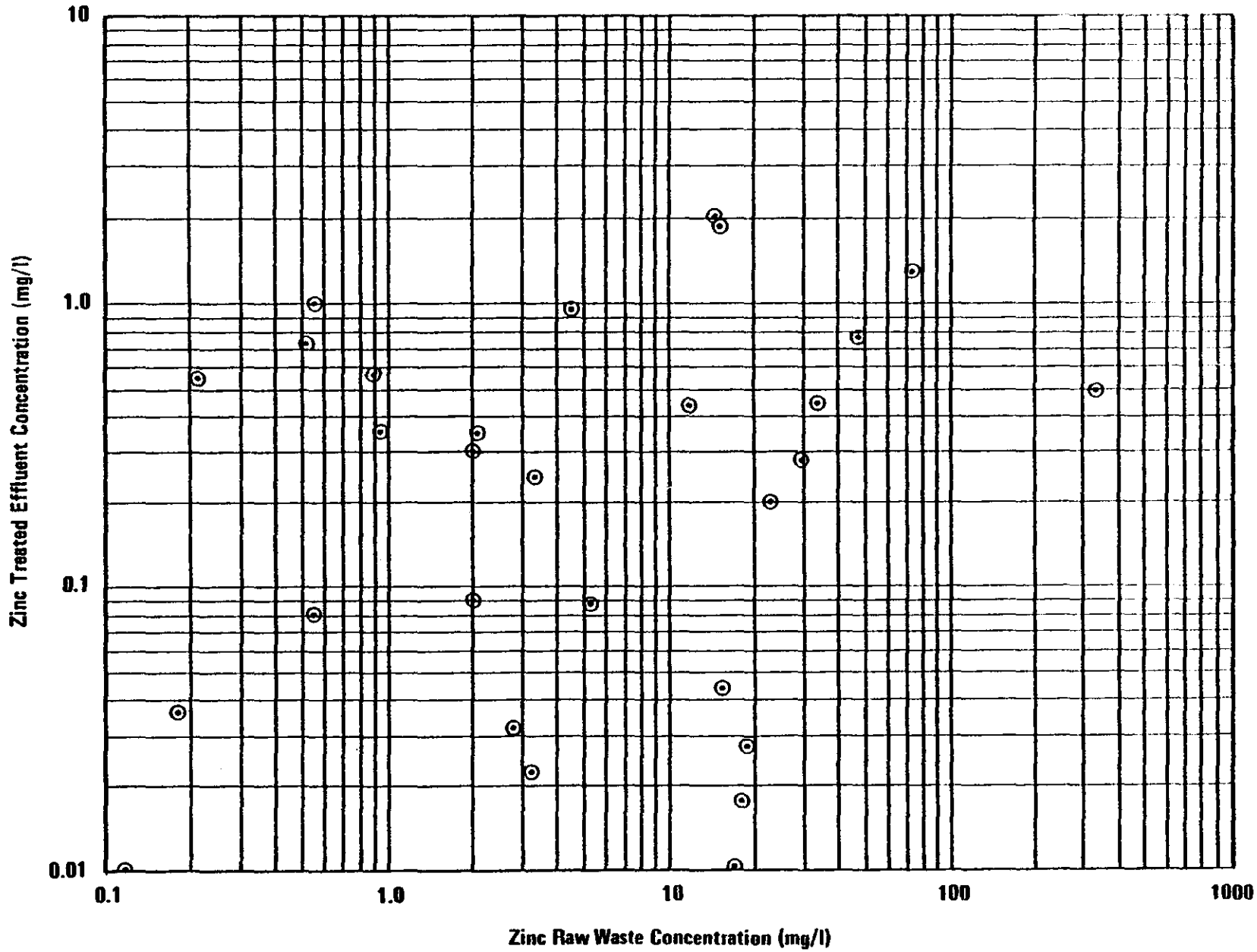

(Number of observations = 29)

FIGURE VII-16
HYDROXIDE PRECIPITATION SEDIMENTATION EFFECTIVENESS
ZINC

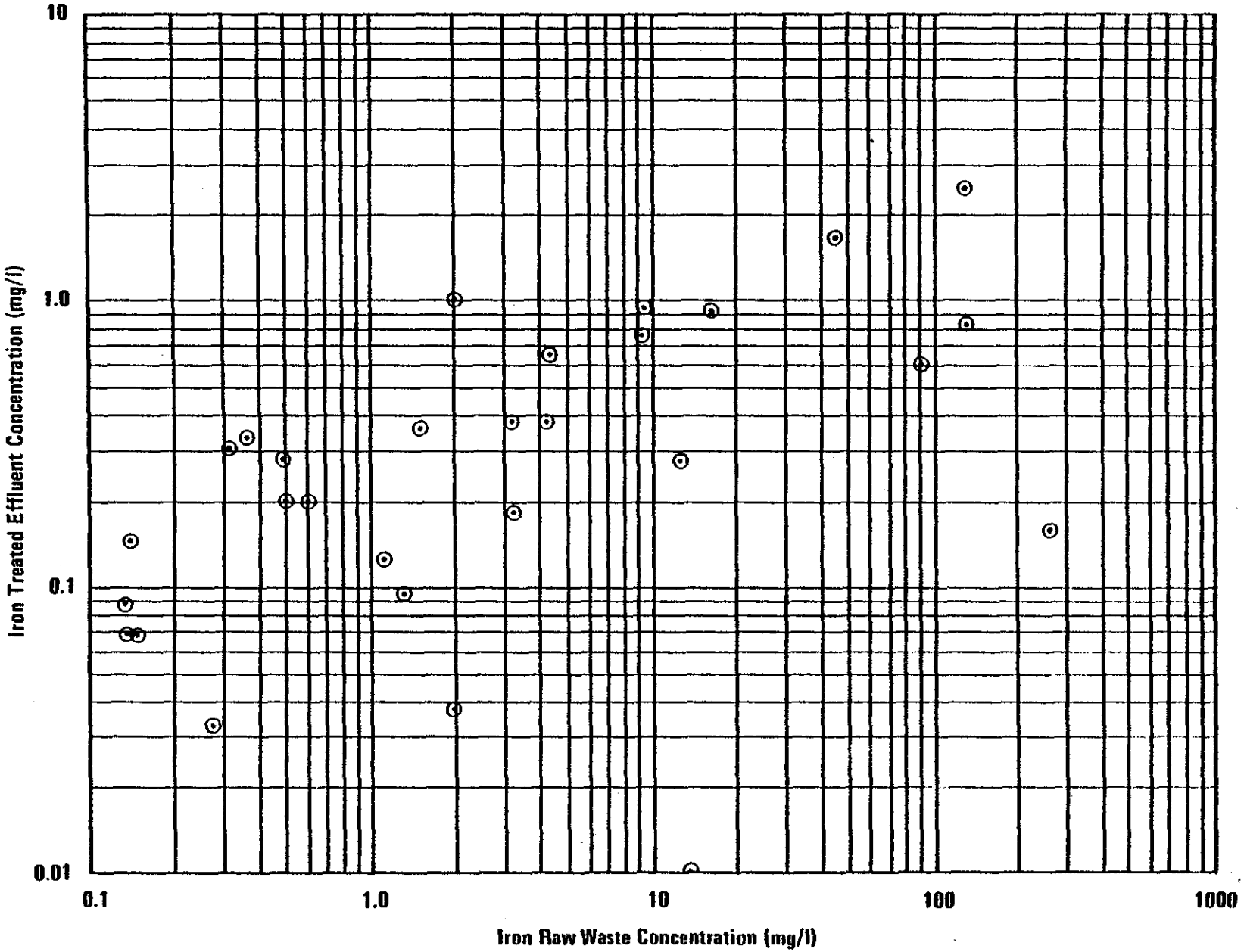

(Number of observations = 29)

FIGURE VII – 17
HYDROXIDE PRECIPITATION SEDIMENTATION EFFECTIVENESS
IRON

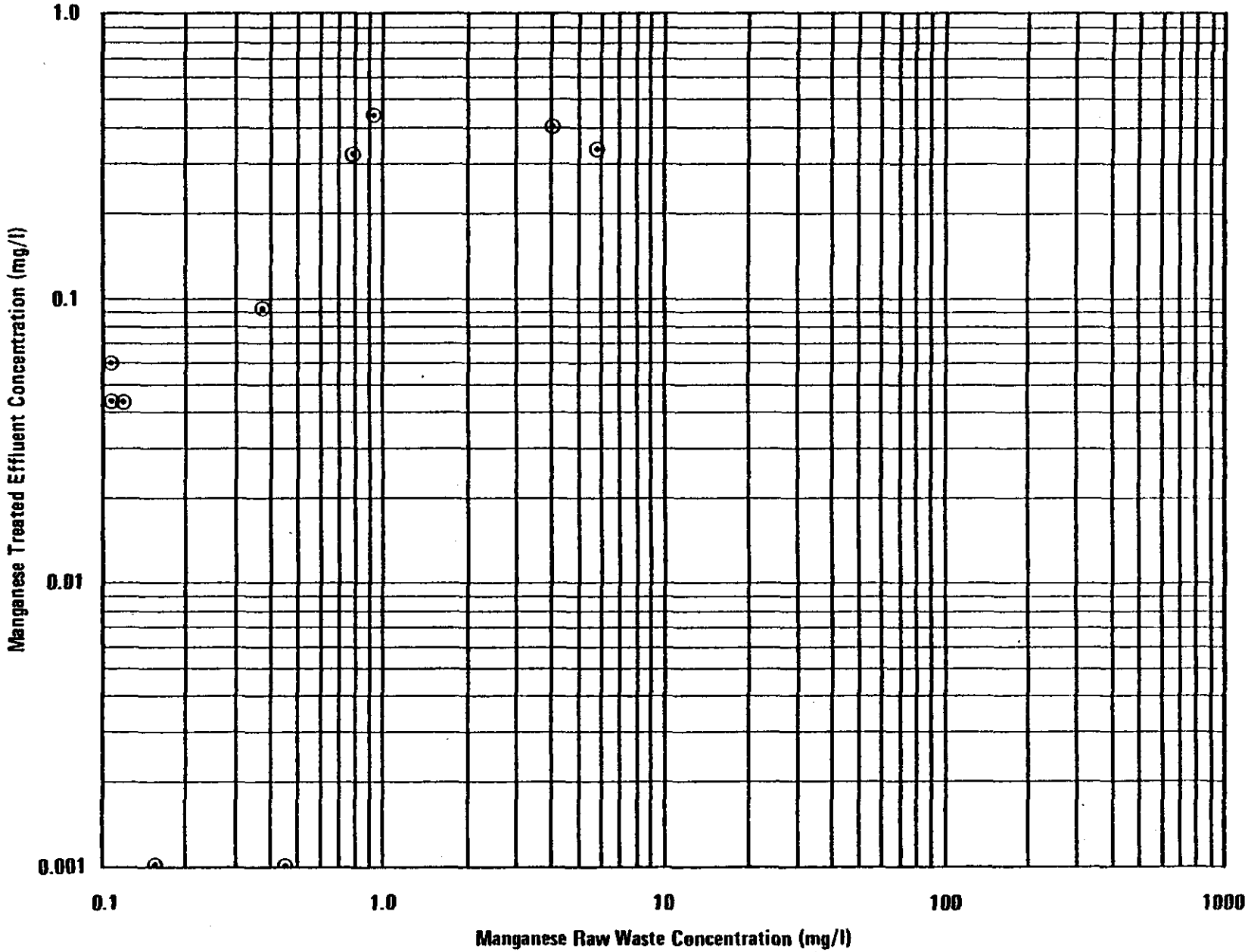

(Number of observations = 10)

FIGURE VII-18
HYDROXIDE PRECIPITATION SEDIMENTATION EFFECTIVENESS
MANGANESE

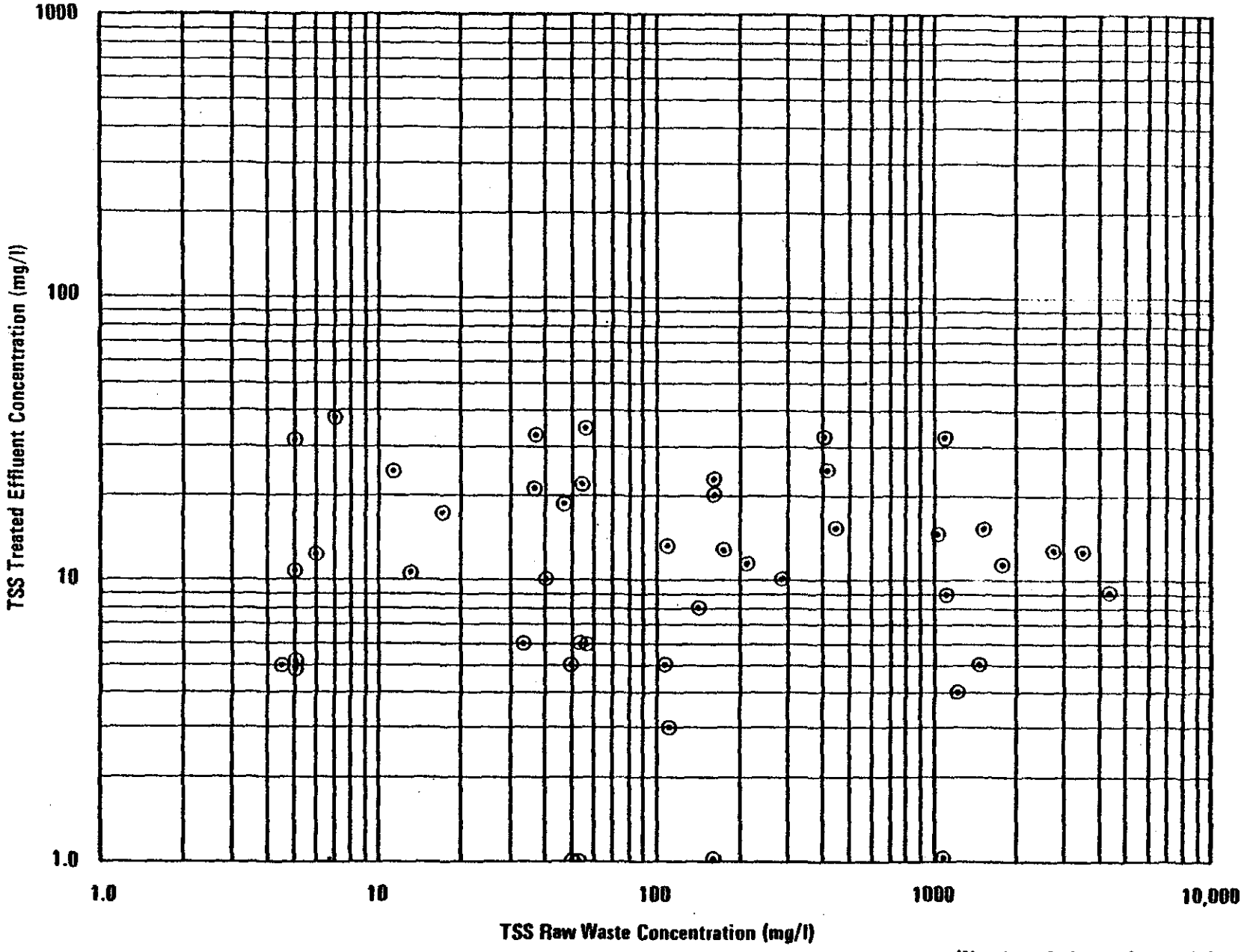

(Number of observations = 46)

FIGURE VII-19
HYDROXIDE PRECIPITATION SEDIMENTATION EFFECTIVENESS
TSS

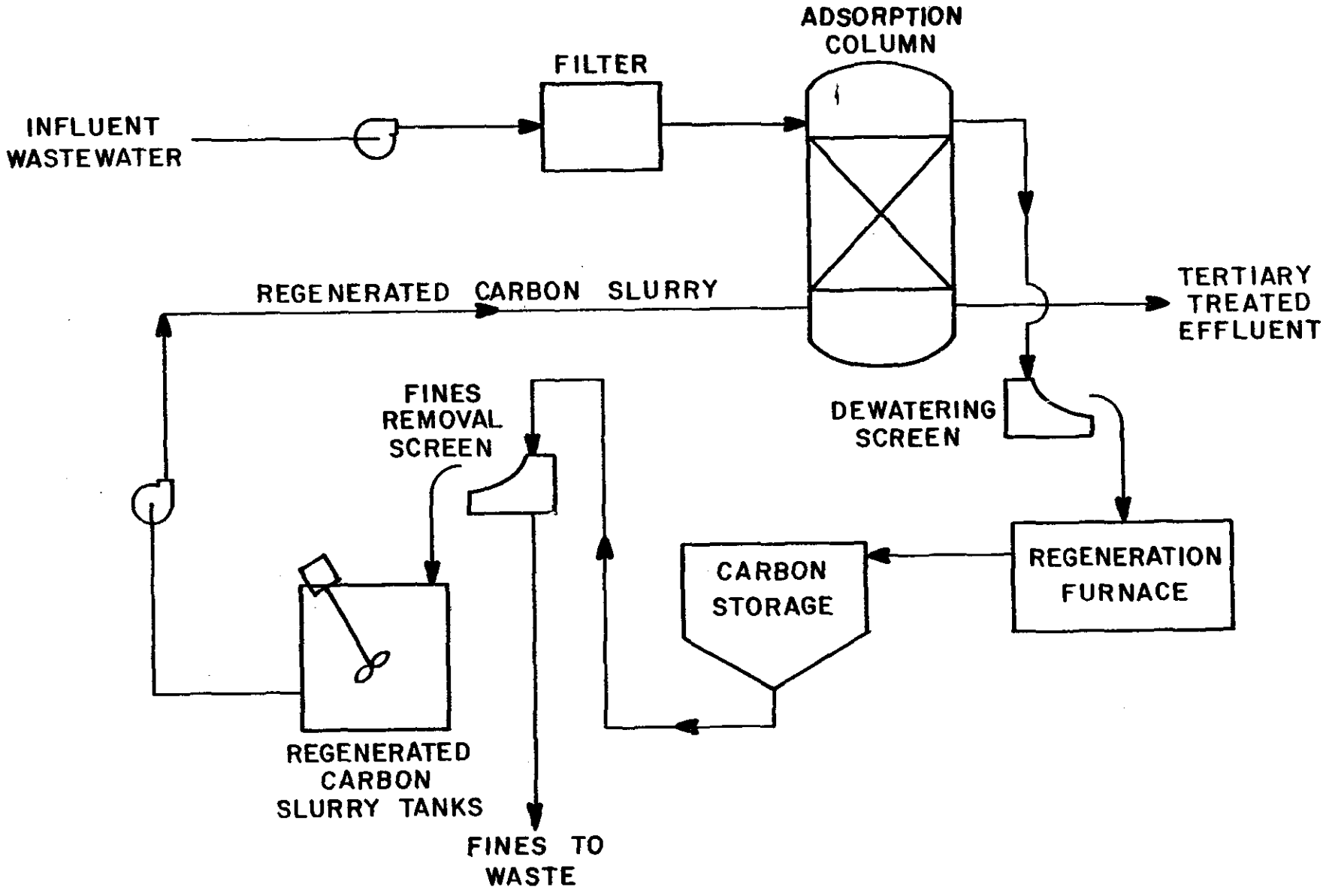

Figure VII-20

FLOW DIAGRAM OF ACTIVATED CARBON ADSORPTION WITH REGENERATION

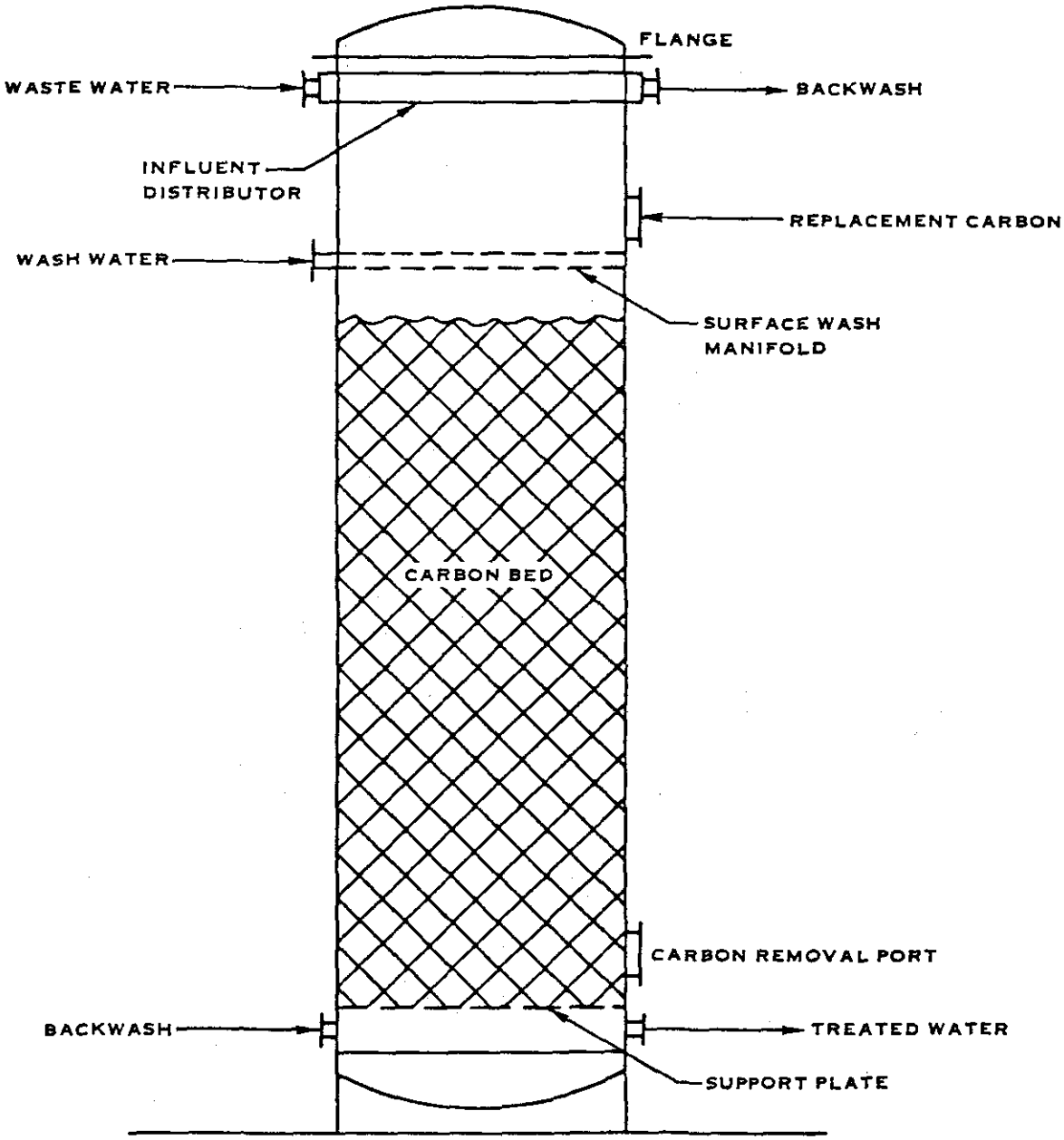

Figure VII-21

ACTIVATED CARBON ADSORPTION COLUMN

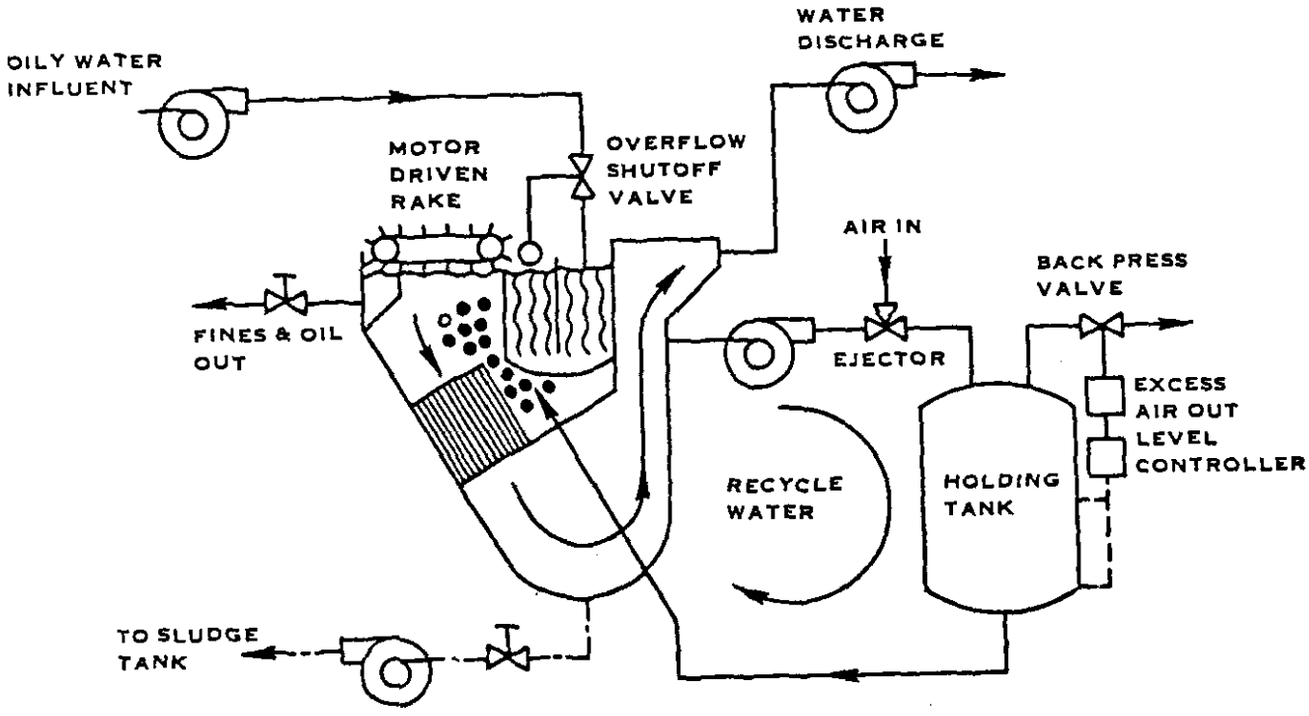

Figure VII-22

DISSOLVED AIR FLOTATION

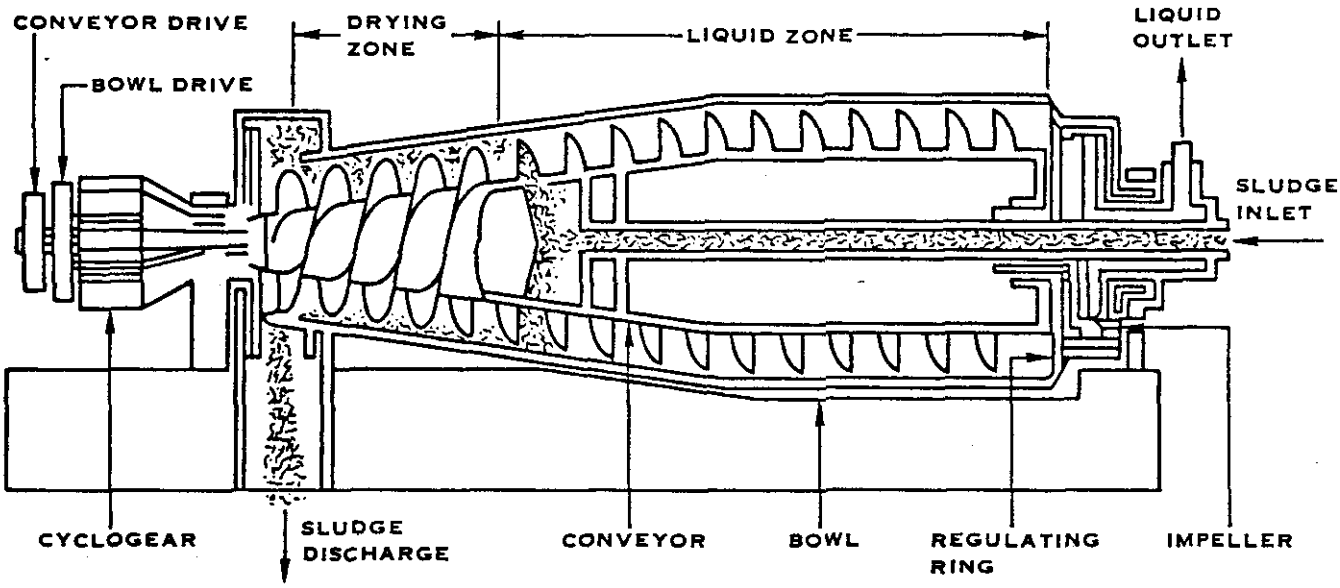

Figure VII-23

CENTRIFUGATION

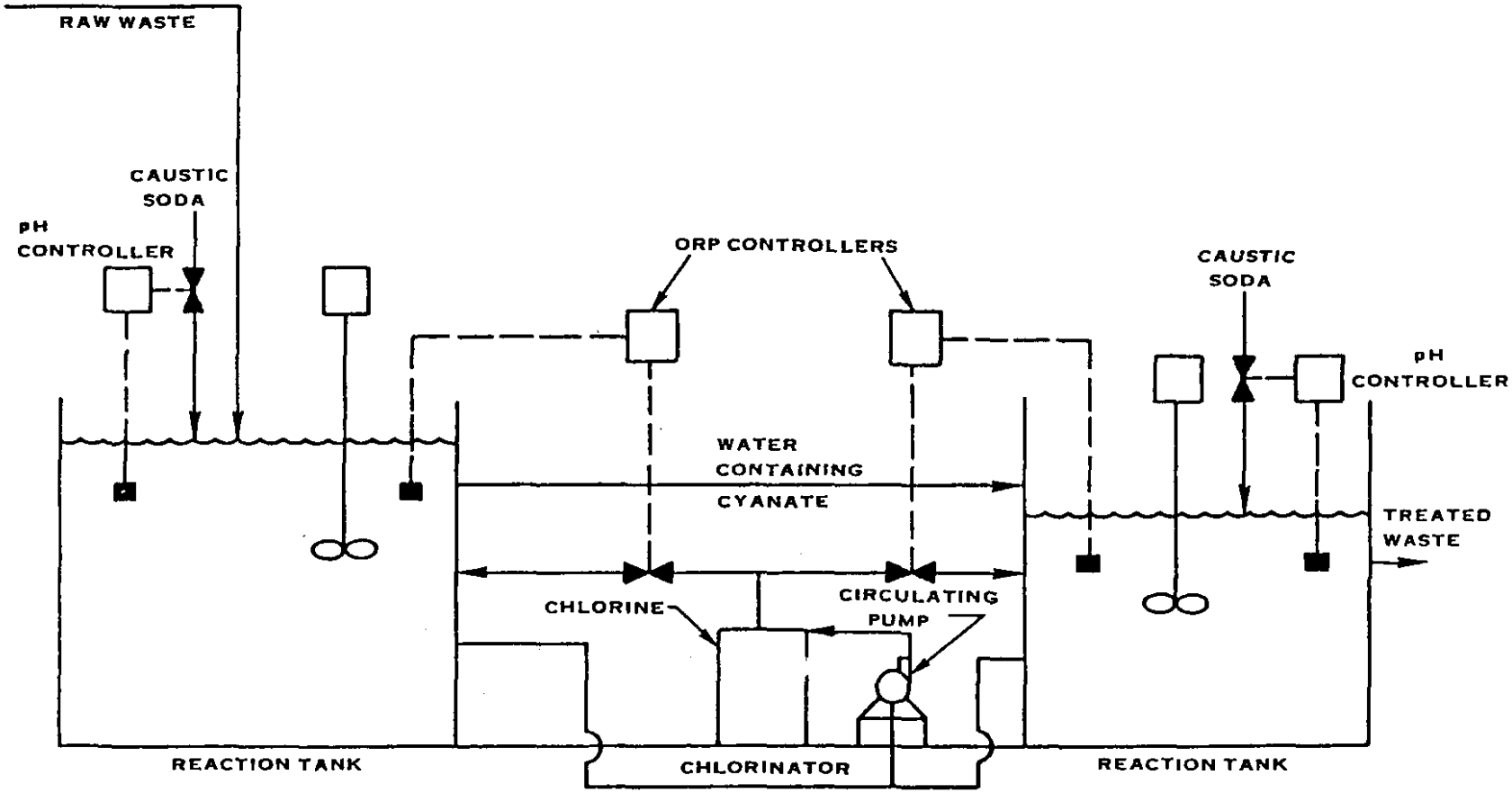

Figure VII-24

TREATMENT OF CYANIDE WASTE BY ALKALINE CHLORINATION

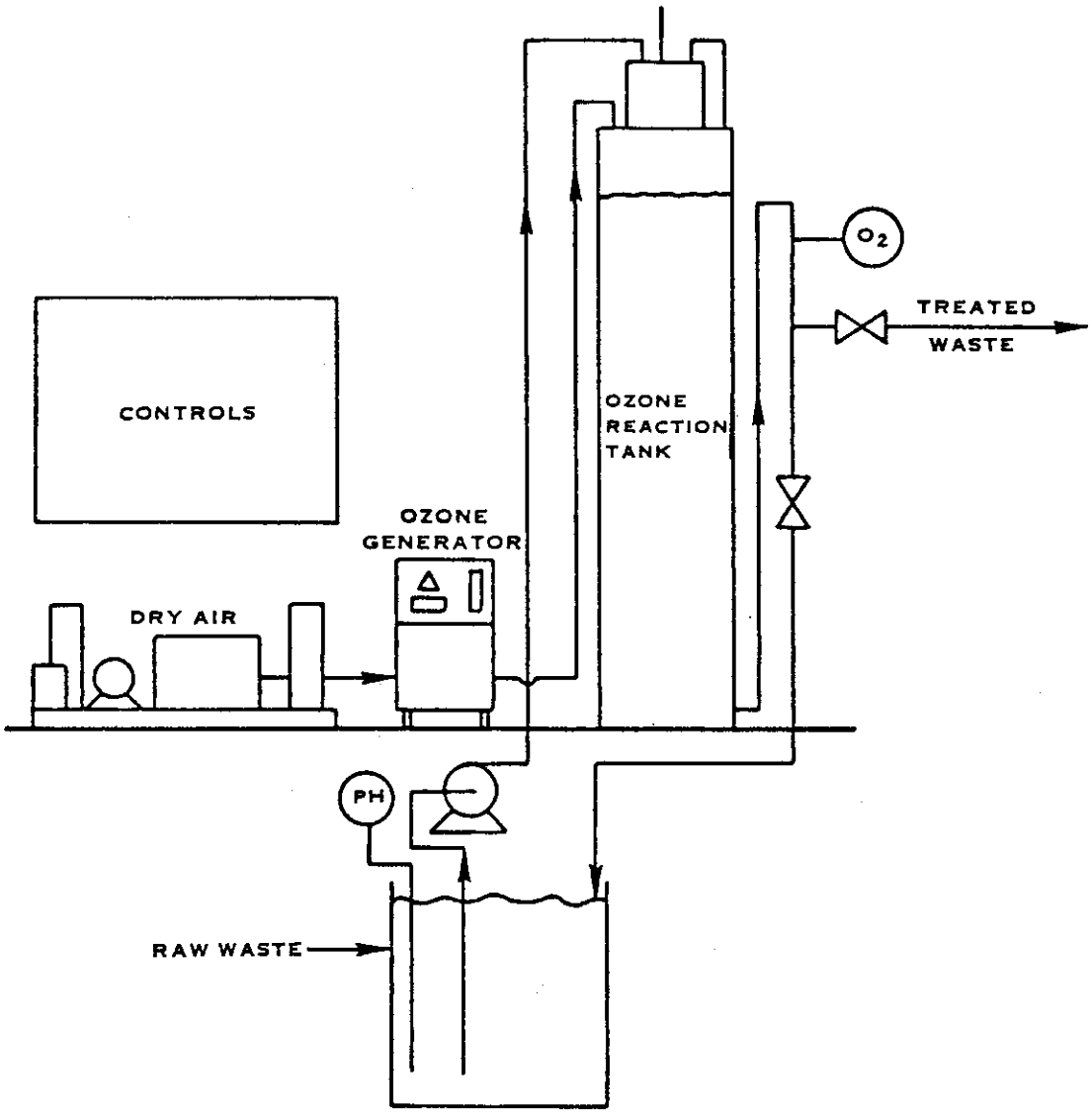

Figure VII-25

TYPICAL OZONE PLANT FOR WASTE TREATMENT

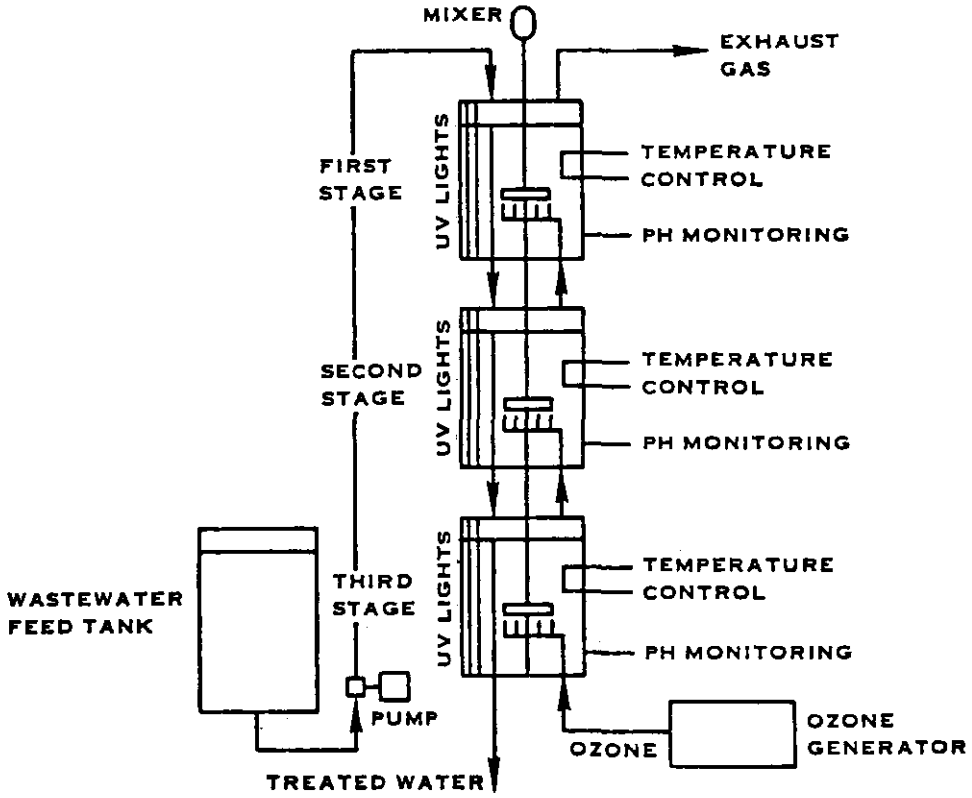

Figure VII-26

UV/OZONATION

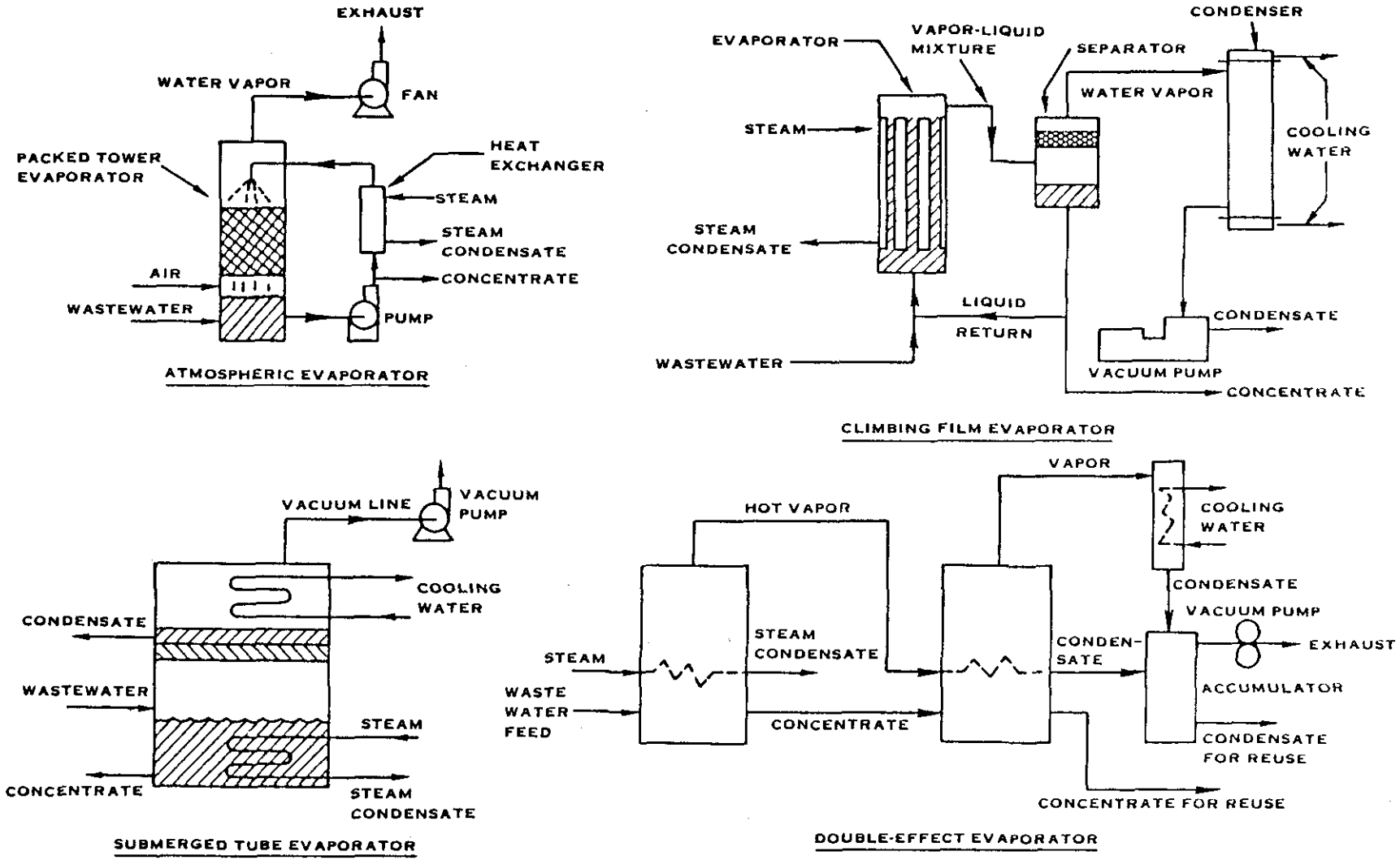

Figure VII-27

TYPES OF EVAPORATION EQUIPMENT

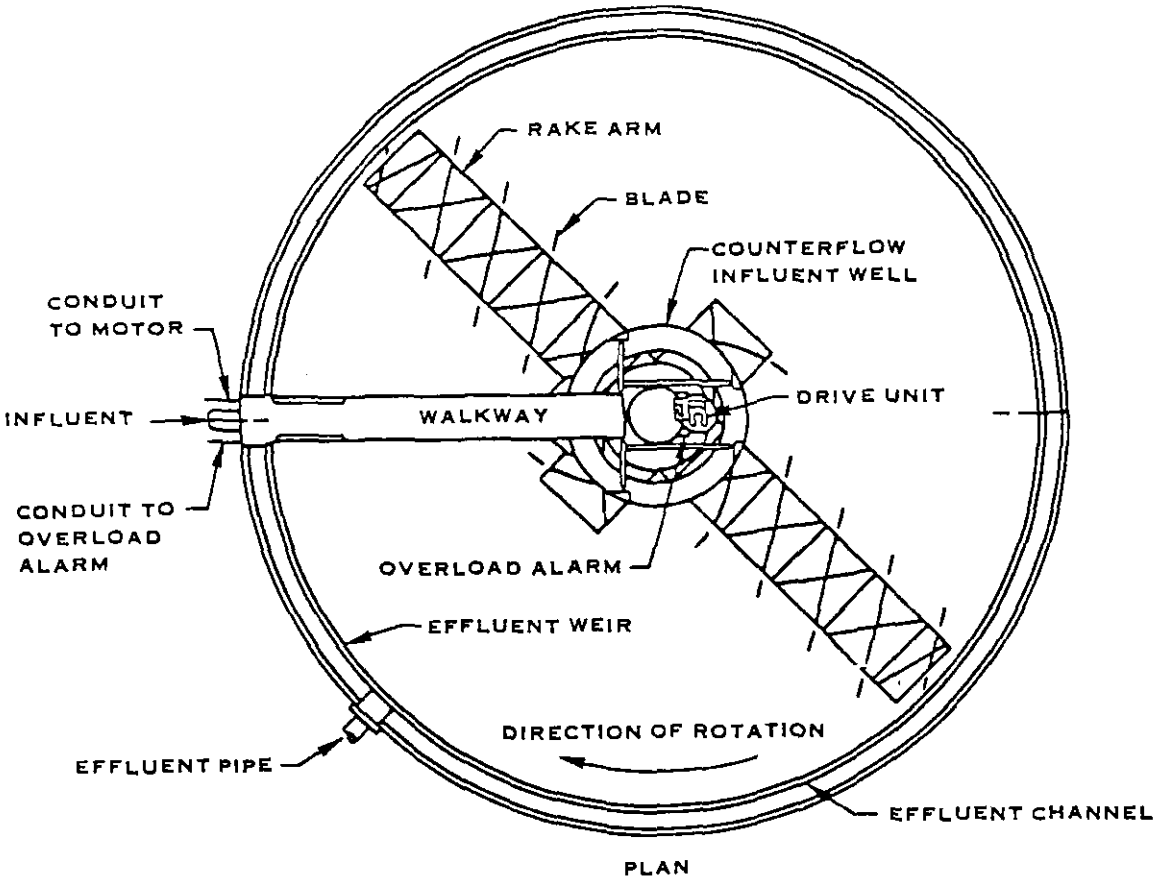

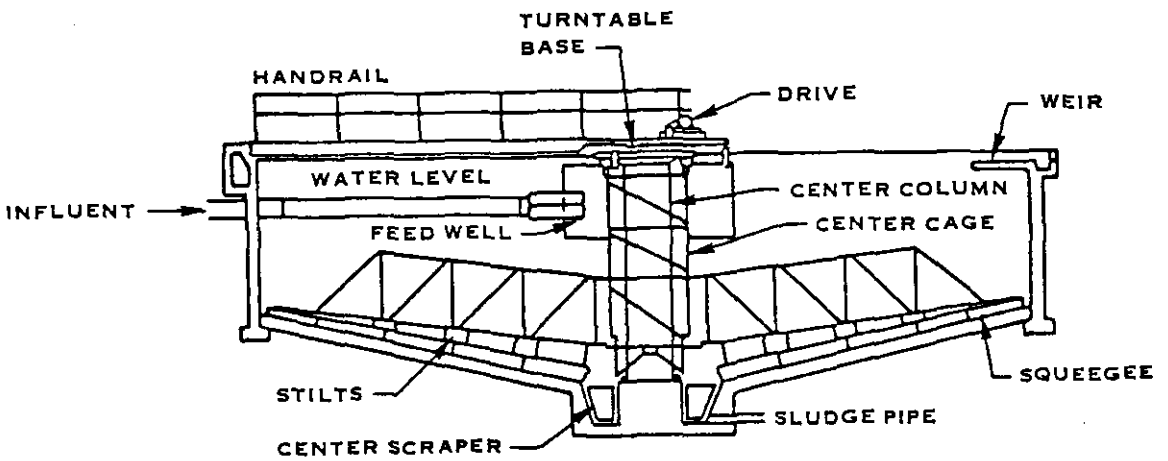

Figure VII-28

GRAVITY THICKENING

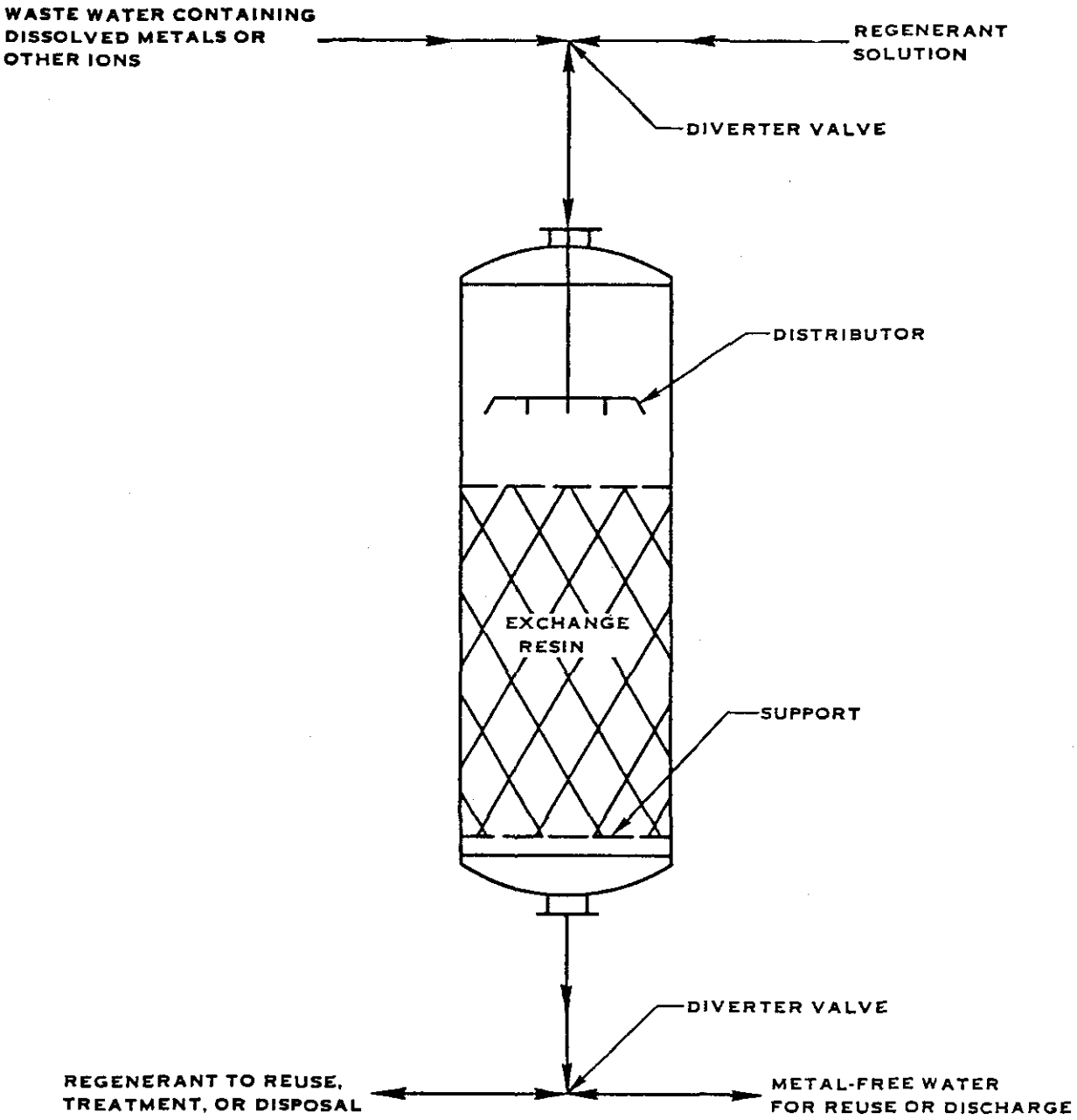

Figure VII-29

ION EXCHANGE WITH REGENERATION

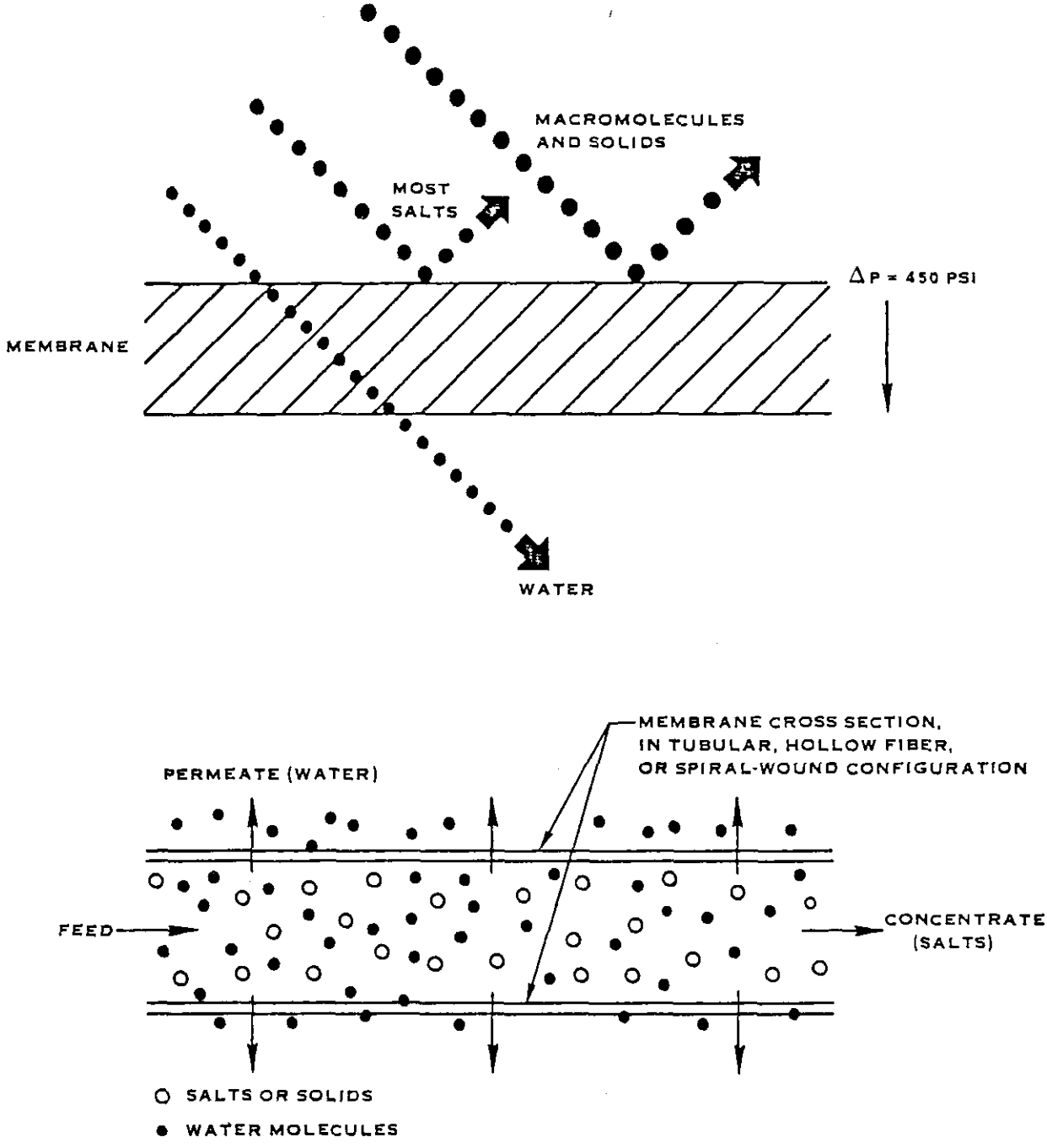

Figure VII-30

SIMPLIFIED REVERSE OSMOSIS SCHEMATIC

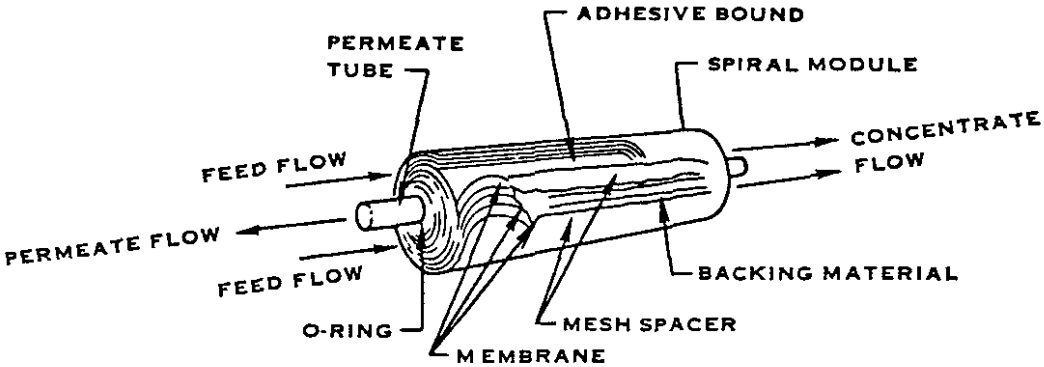

SPIRAL MEMBRANE MODULE

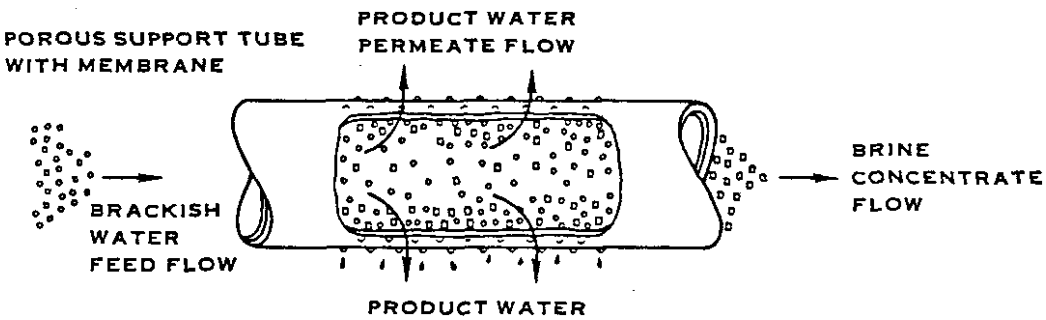

TUBULAR REVERSE OSMOSIS MODULE

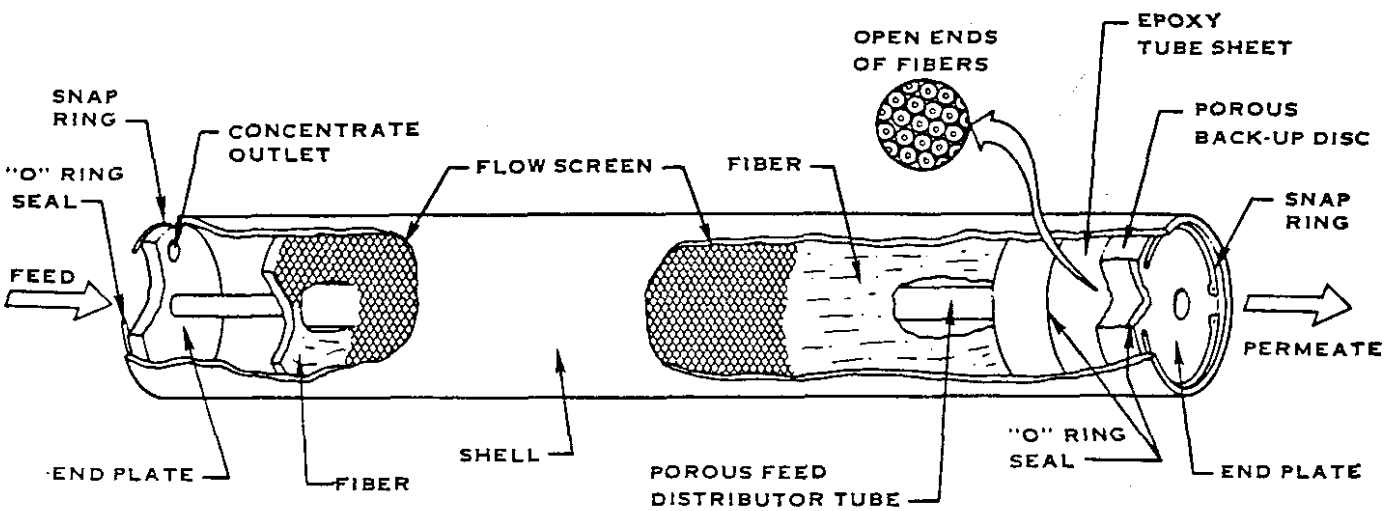

HOLLOW FIBER MODULE

Figure VII-31

REVERSE OSMOSIS MEMBRANE CONFIGURATIONS

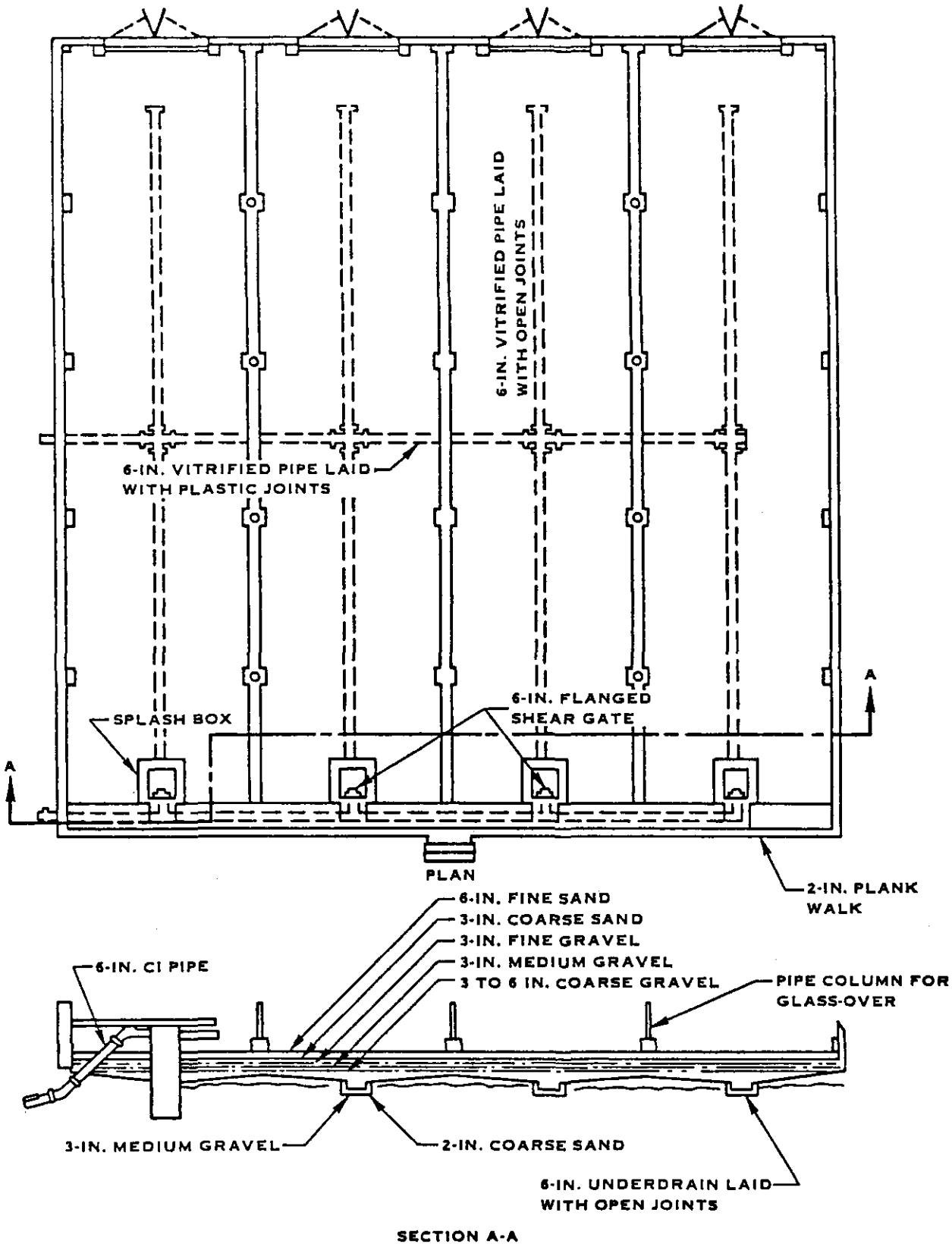

Figure VII-32

SLUDGE DRYING BED

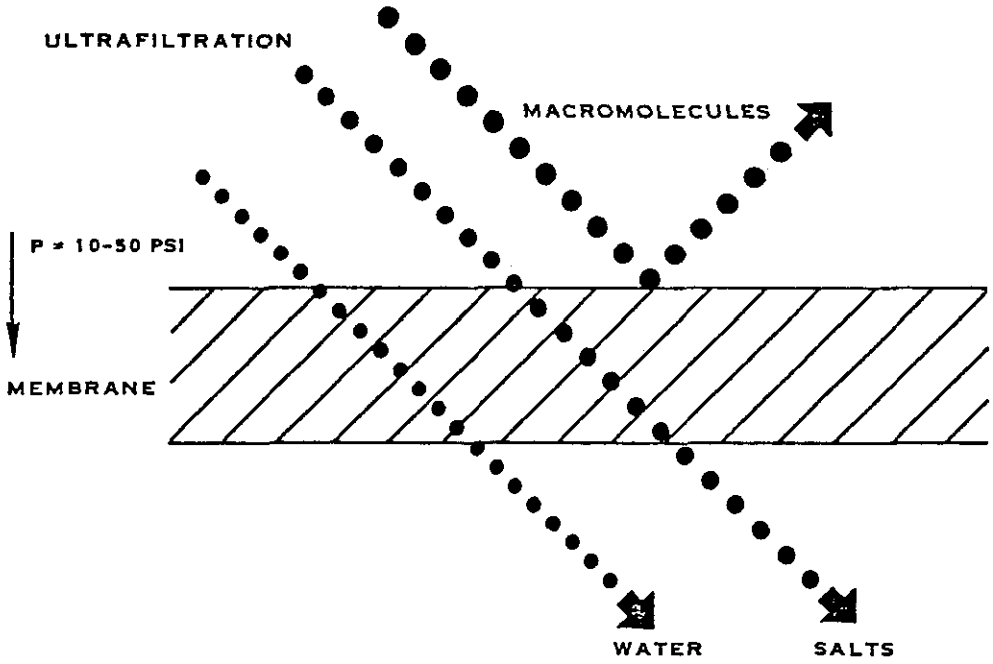

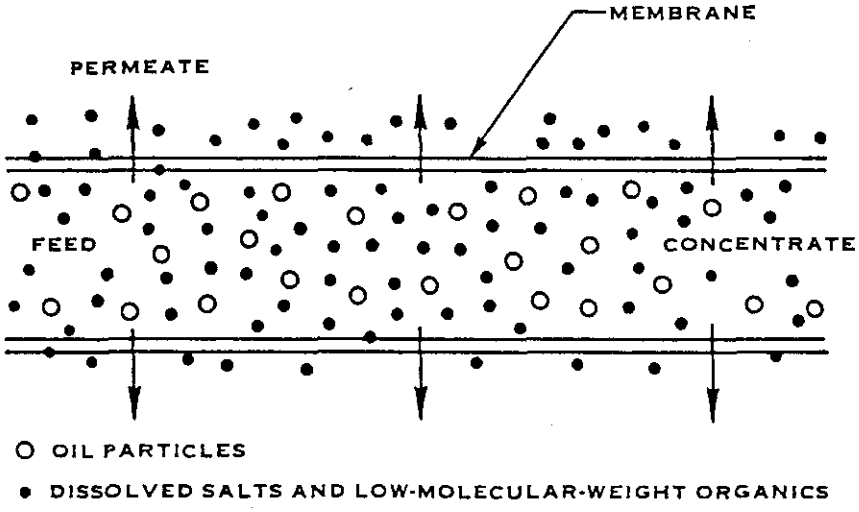

Figure VII-33

SIMPLIFIED ULTRAFILTRATION FLOW SCHEMATIC

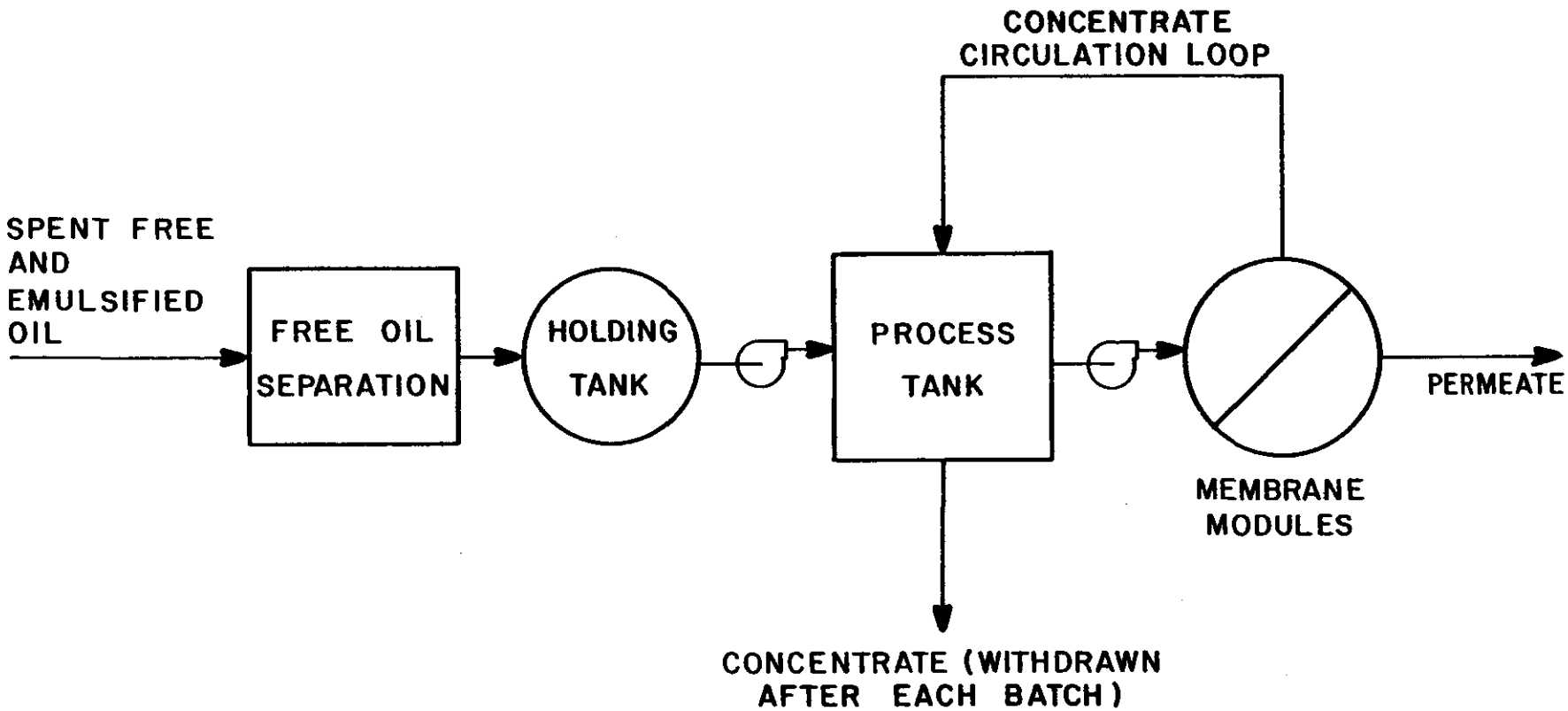

Figure VII-34

FLOW DIAGRAM FOR A BATCH TREATMENT ULTRAFILTRATION SYSTEM

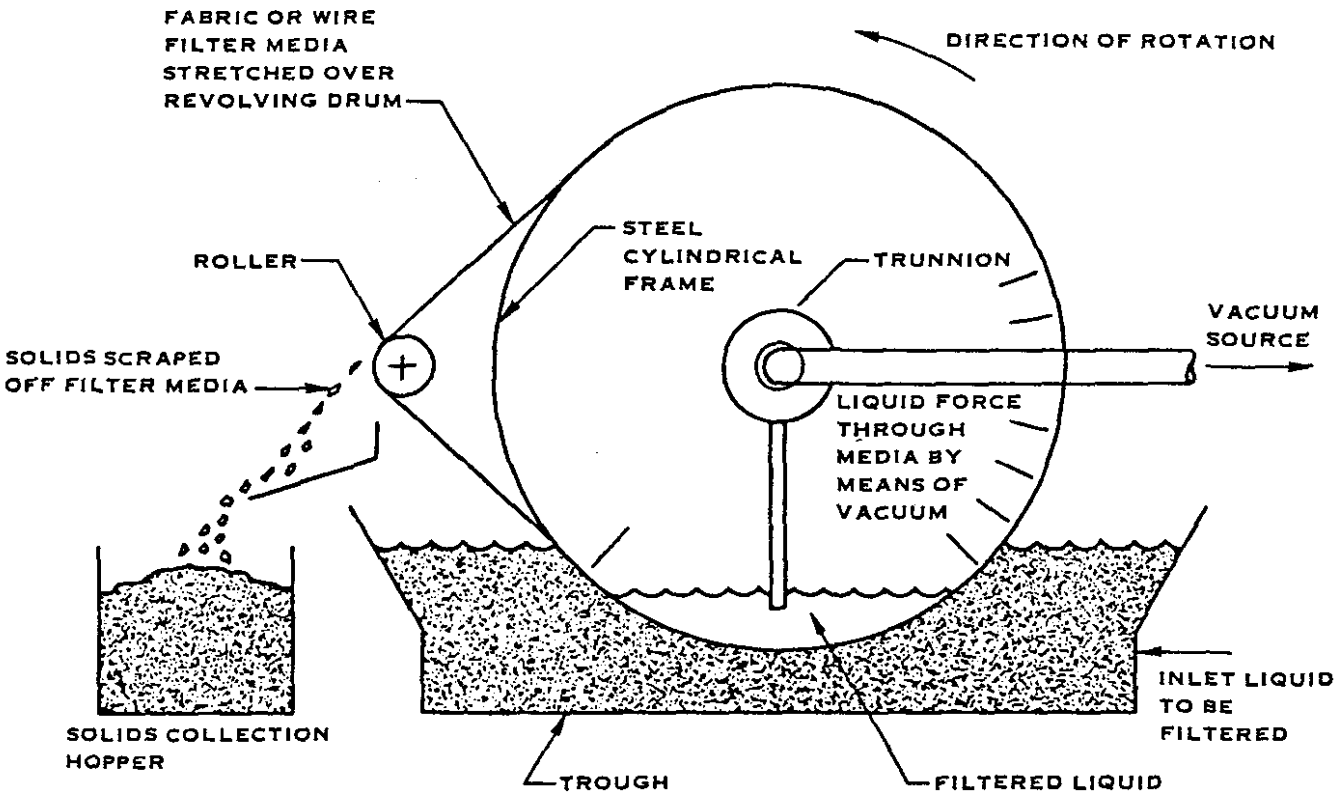

Figure VII-35

VACUUM FILTRATION

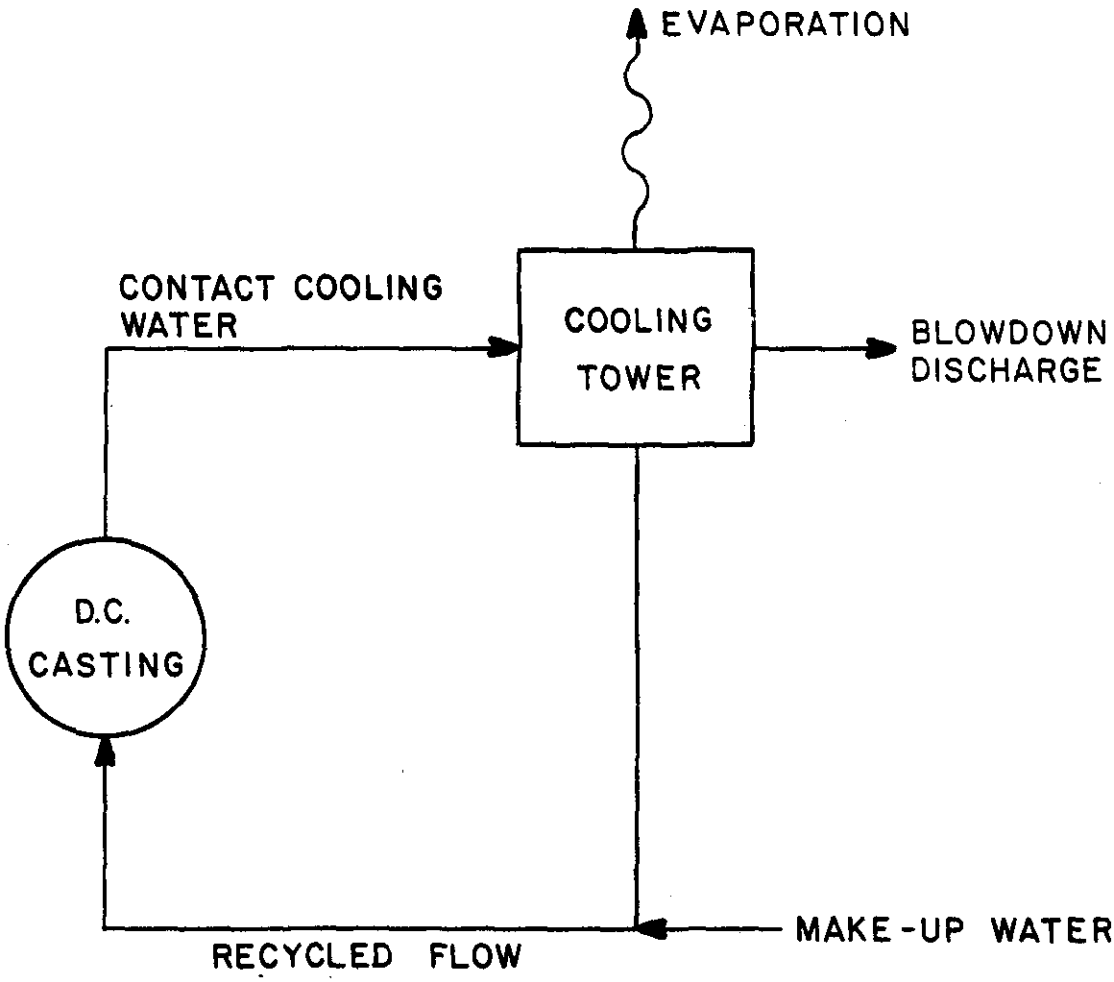

Figure VII-36

FLOW DIAGRAM FOR RECYCLING WITH A COOLING TOWER

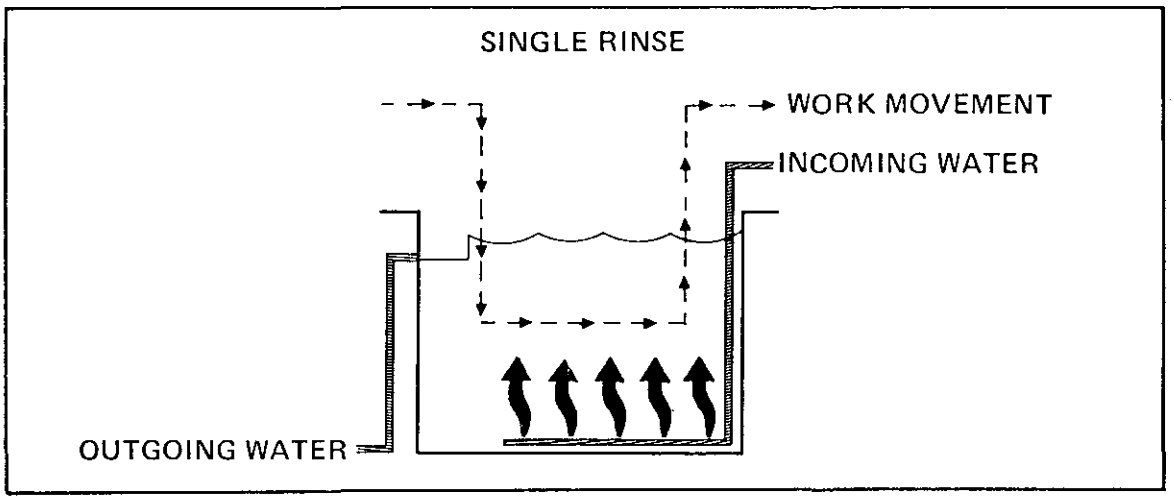

a

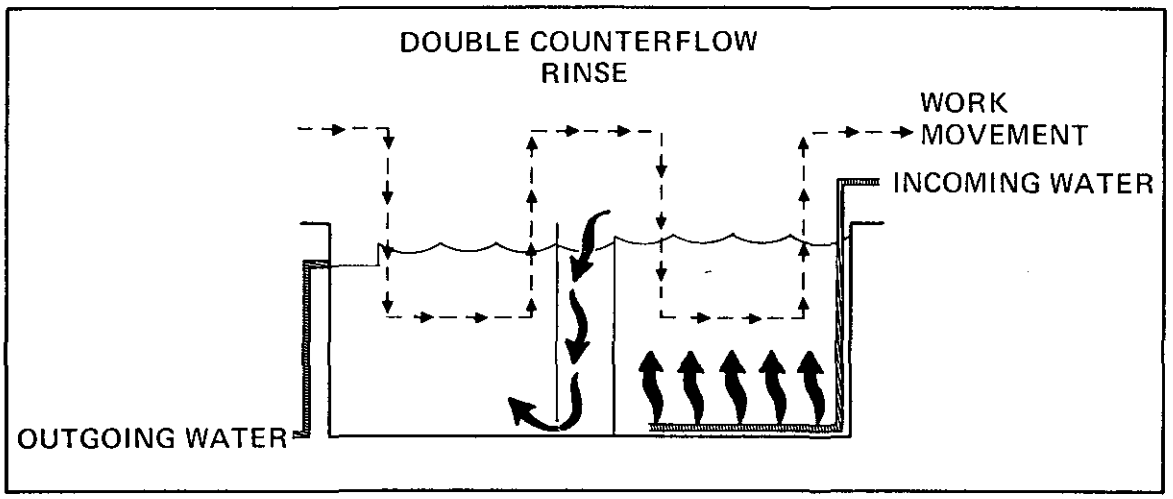

b

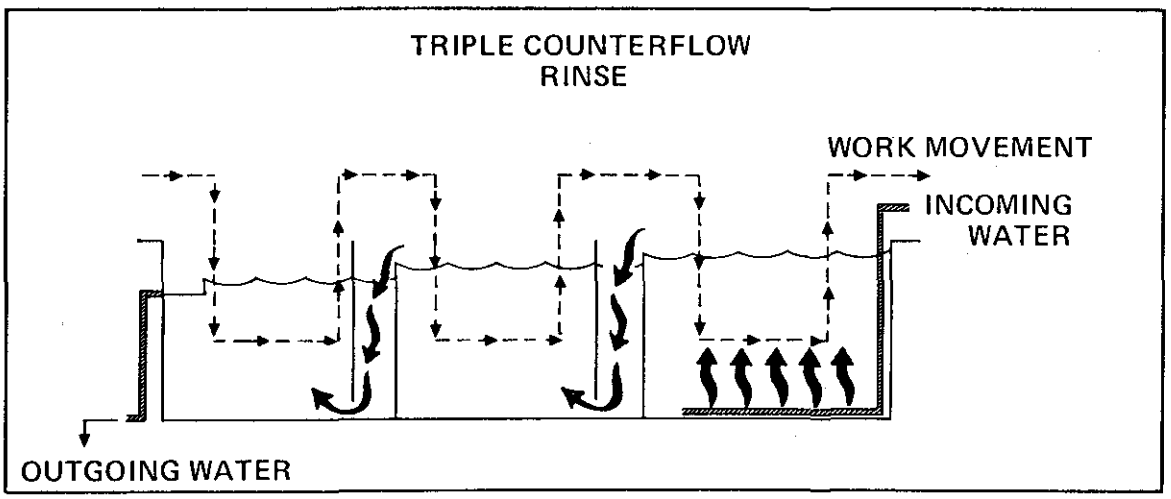

c

Figure VII-37

COUNTER CURRENT RINSING (TANKS)

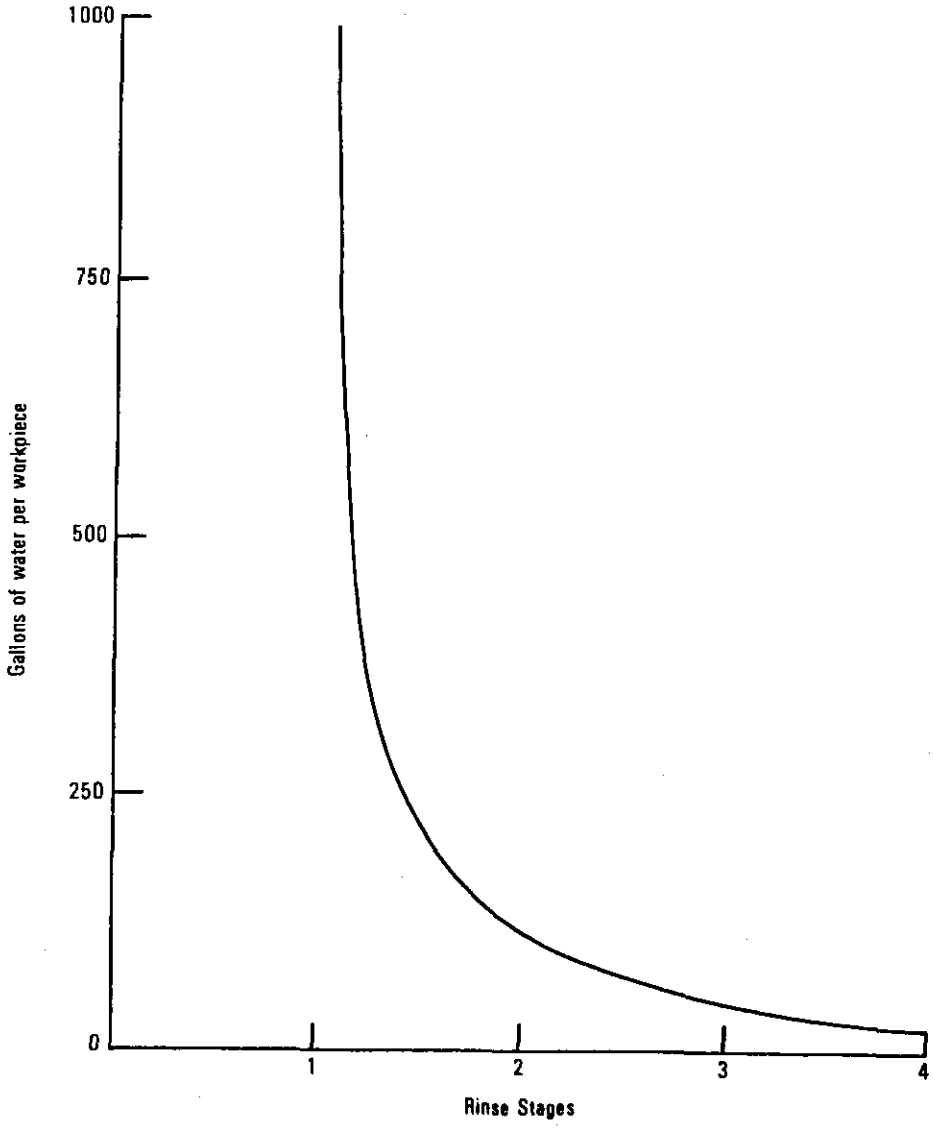

Figure VII-38

EFFECT OF ADDED RINSE STAGES ON WATER USE

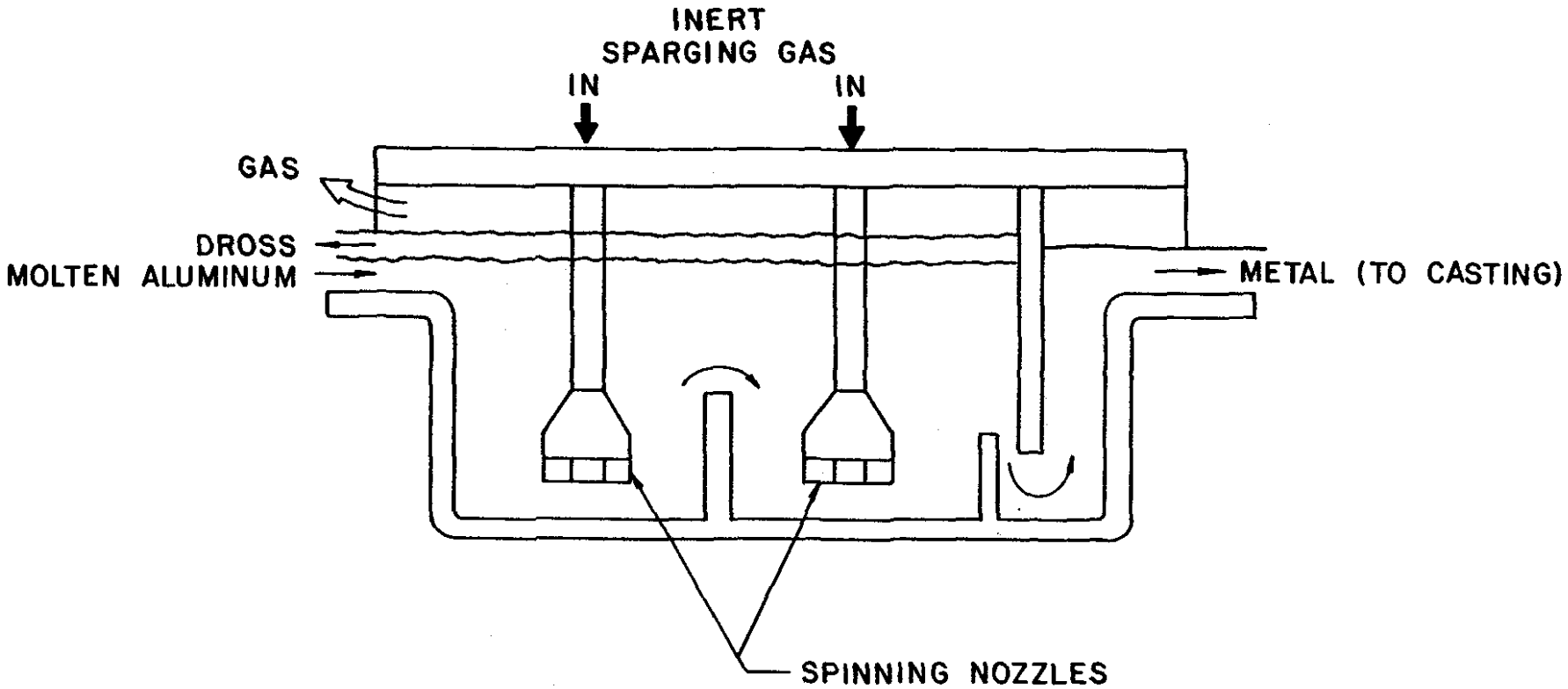

Figure VII-39

SCHEMATIC DIAGRAM OF SPINNING NOZZLE ALUMINUM REFINING PROCESS

Table VII-1

pH CONTROL EFFECT ON METALS REMOVAL

	Day 1		Day 2		Day 3	
	In	Out	In	Out	In	Out
pH Range	2.4-3.4	8.5-8.7	1.0-3.0	5.0-6.0	2.0-5.0	6.5-8.1
(mg/1)						
TSS	39	8	16	19	16	7
Copper	312	0.22	120	5.12	107	0.66
Zinc	250	0.31	32.5	25.0	43.8	0.66

Table VII-2

EFFECTIVENESS OF SODIUM HYDROXIDE FOR METALS REMOVAL

	Day 1		Day 2		Day 3	
	In	Out	In	Out	In	Out
pH Range	2.1-2.9	9.0-9.3	2.0-2.4	8.7-9.1	2.0-2.4	8.6-9.1
(mg/l)						
Cr	0.097	0.0	0.057	0.005	0.068	0.005
Cu	0.063	0.018	0.078	0.014	0.053	0.019
Fe	9.24	0.76	15.5	0.92	9.41	0.95
Pb	1.0	0.11	1.36	0.13	1.45	0.11
Mn	0.11	0.06	0.12	0.044	0.11	0.044
Ni	0.077	0.011	0.036	0.009	0.069	0.011
Zn	0.054	0.0	0.12	0.0	0.19	0.037
TSS		13		11		11

Table VII-3

EFFECTIVENESS OF LIME AND SODIUM HYDROXIDE
FOR METALS REMOVAL

	Day 1		Day 2		Day 3	
	In	Out	In	Out	In	Out
pH Range	9.2-9.6	8.3-9.8	9.2	7.6-8.1	9.6	7.8-8.2
(mg/l)						
Al	37.3	0.35	38.1	0.35	29.9	0.35
Co	3.92	0.0	4.65	0.0	4.37	0.0
Cu	0.65	0.003	0.63	0.003	0.72	0.003
Fe	137	0.49	110	0.57	208	0.58
Mn	175	0.12	205	0.012	245	0.12
Ni	6.86	0.0	5.84	0.0	5.63	0.0
Se	28.6	0.0	30.2	0.0	27.4	0.0
Ti	143	0.0	125	0.0	115	0.0
Zn	18.5	0.027	16.2	0.044	17.0	0.01
TSS	4,390	9	3,595	13	2,805	13

Table VII-4

THEORETICAL SOLUBILITIES OF HYDROXIDES AND SULFIDES OF SELECTED METALS IN PURE WATER

Metal	Solubility of Metal Ion, mg/l		
	As Hydroxide	As Carbonate	As Sulfide
Cadmium (Cd^{++})	2.3×10^{-5}	1.0×10^{-4}	6.7×10^{-10}
Chromium (Cr^{+++})	8.4×10^{-4}		No precipitate
Cobalt (Co^{++})	2.2×10^{-1}		1.0×10^{-8}
Copper (Cu^{++})	2.2×10^{-2}		5.8×10^{-18}
Iron (Fe^{++})	8.9×10^{-1}		3.4×10^{-5}
Lead (Pb^{++})	2.1	7.0×10^{-3}	3.8×10^{-9}
Manganese (Mn^{++})	1.2		2.1×10^{-3}
Mercury (Hg^{++})	3.9×10^{-4}	3.9×10^{-2}	9.0×10^{-20}
Nickel (Ni^{++})	6.9×10^{-3}	1.9×10^{-1}	6.9×10^{-8}
Silver (Ag^{+})	13.3	2.1×10^{-1}	7.4×10^{-12}
Tin (Sn^{++})	1.1×10^{-4}		3.8×10^{-8}
Zinc (Zn^{++})	1.1	7.0×10^{-4}	2.3×10^{-7}

Table VII-5

SAMPLING DATA FROM SULFIDE PRECIPITATION-SEDIMENTATION SYSTEMS

Treatment	Lime, FeS, Polyelectrolyte, Settle, Filter		Lime, FeS, Polyelectrolyte, Settle, Filter		NaOH, Ferric Chloride, Na_2S, Clarify (1 Stage)	
	In	Out	In	Out	In	Out
pH	5.0-6.8	8-9	7.7	7.38		
(mg/l)						
Cr+6	25.6	<0.014	0.022	<0.020	11.45	<.005
Cr	32.3	<0.04	2.4	<0.1	18.35	<.005
Cu	--	--	--	--	0.029	0.003
Fe	0.52	0.10	108	0.6	--	--
Ni	--	--	0.68	<0.1	--	--
Zn	39.5	<0.07	33.9	<0.1	0.060	0.009

Table VII-6

SULFIDE PRECIPITATION-SEDIMENTATION PERFORMANCE

Parameter	Treated Effluent (mg/l)
Cd	0.01
Cr (Total)	0.05
Cu	0.05
Pb	0.01
Hg	0.03
Ni	0.05
Ag	0.05
Zn	0.01

Table VII-7

FERRITE CO-PRECIPITATION PERFORMANCE

Metal	Influent (mg/l)	Effluent (mg/l)
Mercury	7.4	0.001
Cadmium	240	0.008
Copper	10	0.010
Zinc	18	0.016
Chromium	10	<0.010
Manganese	12	0.007
Nickel	1,000	0.200
Iron	600	0.06
Bismuth	240	0.100
Lead	475	0.010

Table VII-8

CONCENTRATION OF TOTAL CYANIDE (mg/l)

Plant	Method	In	Out
1057	$FeSO_4$	2.57	0.024
		2.42	0.015
		3.28	0.032
33056	$FeSO_4$	0.14	0.09
		0.16	0.09
12052	$ZnSO_4$	0.46	0.14
		0.12	0.06
Mean			0.07

Table VII-9

MULTIMEDIA FILTER PERFORMANCE

Plant ID #	TSS Effluent Concentration, mg/l
06097	0.0, 0.0, 0.5
13924	1.8, 2.2, 5.6, 4.0, 4.0, 3.0, 2.2, 2.8 3.0, 2.0, 5.6, 3.6, 2.4, 3.4
18538	1.0
30172	1.4, 7.0, 1.0
36048	2.1, 2.6, 1.5
Mean	2.61

Table VII-10

PERFORMANCE OF SELECTED SETTLING SYSTEMS

Plant ID	Settling Device	SUSPENDED SOLIDS CONCENTRATION (mg/l) Day 1 In	Day 1 Out	Day 2 In	Day 2 Out	Day 3 In	Day 3 Out
01057	Lagoon	54	6	56	6	50	5
09025	Clarifier + Settling Ponds	1,100	9	1,900	12	1,620	5
11058	Clarifier	451	17	--	--	--	--
12075	Settling Pond	284	6	242	10	502	14
19019	Settling Tank	170	1	50	1	--	--
33617	Clarifier & Lagoon	--	--	1,662	16	1,298	4
40063	Clarifier	4,390	9	3,595	12	2,805	13
44062	Clarifier	182	13	118	14	174	23
46050	Settling Tank	295	10	42	10	153	8

Table VII-11

SKIMMING PERFORMANCE

Plant	Skimmer Type	Oil & Grease (mg/l) In	Oil & Grease (mg/l) Out
06058	API	224,669	17.9
06058	Belt	19.4	8.3

Table VII-12

TRACE ORGANIC REMOVAL BY SKIMMING
API PLUS BELT SKIMMERS
(From Plant 06058)

	Influent (mg/l)	Effluent (mg/l)
Oil & Grease	225,000	14.6
Chloroform	.023	.007
Methylene Chloride	.013	.012
Naphthalene	2.31	.004
N-nitrosodiphenylamine	59.0	.182
Bis(2-ethylhexyl)phthalate	11.0	.027
Butyl benzyl phthalate	.005	.002
Di-n-octyl phthalate	.019	.002
Anthracene - phenanthrene	16.4	.014
Toluene	.02	.012

Table VII-13

CHEMICAL EMULSION BREAKING EFFICIENCIES

Parameter	Concentration (mg/l) Influent	Effluent	Reference
O&G	6,060	98	Sampling data*
TSS	2,612	46	
O&G	13,000	277	Sampling data+
	18,400	--	
	21,300	189	
TSS	540	121	
	680	59	
	1,060	140	
O&G	2,300	52	Sampling data**
	12,500	27	
	13,800	18	
TSS	1,650	187	
	2,200	153	
	3,470	63	
O&G	7,200	80	Katnick and Pavilcius, 1978++

*Oil and grease and total suspended solids were taken as grab samples before and after batch emulsion breaking treatment which used alum and polymer on emulsified rolling oil wastewater.

+Oil and grease (grab) and total suspended solids (grab) samples were taken on three consecutive days from emulsified rolling oil wastewater. A commercial demulsifier was used in this batch treatment.

**Oil and grease (grab) and total suspended solids (composite) samples were taken on three consecutive days from emulsified rolling oil wastewater. A commercial demulsifier (polymer) was used in this batch treatment.

++This result is from a full-scale batch chemical treatment system for emulsified oils from a steel rolling mill.

Table VII-14

COMBINED METALS DATA EFFLUENT VALUES (mg/l)

	Mean	One-Day Max.	10-Day Avg. Max.	30-Day Avg. Max.
Cd	0.079	0.32	0.15	0.13
Cr	0.08	0.42	0.17	0.12
Cu	0.58	1.90	1.00	0.73
Pb	0.12	0.15	0.13	0.12
Ni	0.57	1.41	1.00	0.75
Zn	0.30	1.33	0.56	0.41
Fe	0.41	1.23	0.63	0.51
Mn	0.21	0.43	0.34	0.27
TSS	12.0	41.0	20.0	15.5

Table VII-15

L&S PERFORMANCE
ADDITIONAL POLLUTANTS

Pollutant	Average Performance (mg/l)
Sb	0.7
As	0.51
Be	0.30
Hg	0.06
Se	0.30
Ag	0.10
Th	0.50
Al	1.11
Co	0.05
F	14.5

Table VII-16

COMBINED METALS DATA SET - UNTREATED WASTEWATER

Pollutant	Min. Conc. (mg/l)	Max. Conc. (mg/l)
Cd	<0.1	3.83
Cr	<0.1	116
Cu	<0.1	108
Pb	<0.1	29.2
Ni	<0.1	27.5
Zn	<0.1	337.
Fe	<0.1	263
Mn	<0.1	5.98
TSS	4.6	4,390

Table VII-17

MAXIMUM POLLUTANT LEVEL IN UNTREATED WASTEWATER
ADDITIONAL POLLUTANTS
(mg/l)

Pollutant	As & Se	Be	Ag	F
As	4.2	--	--	--
Be	--	10.24	--	--
Cd	<0.1	--	<0.1	<0.1
Cr	0.18	8.60	0.23	22.8
Cu	33.2	1.24	110.5	2.2
Pb	6.5	0.35	11.4	5.35
Ni	--	--	100	0.69
Ag	--	--	4.7	--
Zn	3.62	0.12	1,512	<0.1
F	--	--	--	760
Fe	--	646	--	--
O&G	16.9	--	16	2.8
TSS	352	796	587.8	5.6

Table VII-18

PRECIPITATION-SETTLING-FILTRATION (LS&F) PERFORMANCE
PLANT A

Parameters	No. Points	Range mg/l	Mean ± Std. Dev.	Mean + 2 Std. Dev.
For 1979-Treated Wastewater				
Cr	47	0.015 - 0.13	0.045 ± 0.029	0.10
Cu	12	0.01 - 0.03	0.019 ± 0.006	0.03
Ni	47	0.08 - 0.64	0.22 ± 0.13	0.48
Zn	47	0.08 - 0.53	0.17 ± 0.09	0.35
Fe				
For 1978-Treated Wastewater				
Cr	47	0.01 - 0.07	0.06 ± 0.10	0.26
Cu	28	0.005 - 0.055	0.016 ± 0.010	0.04
Ni	47	0.10 - 0.92	0.20 ± 0.14	0.48
Zn	47	0.08 - 2.35	0.23 ± 0.34	0.91
Fe	21	0.26 - 1.1	0.49 ± 0.18	0.85
Raw Waste				
Cr	5	32.0 - 72.0		
Cu	5	0.08 - 0.45		
Ni	5	1.65 - 20.0		
Zn	5	33.2 - 32.0		
Fe	5	10.0 - 95.0		

Table VII-19

PRECIPITATION-SETTLING-FILTRATION (LS&F) PERFORMANCE
PLANT B

Parameters	No. Points	Range mg/l	Mean ± Std. Dev.	Mean + 2 Std. Dev.
For 1979-Treated Wastewater				
Cr	175	0.0 - 0.40	0.068 ± 0.075	0.22
Cu	176	0.0 - 0.22	0.024 ± 0.021	0.07
Ni	175	0.01 - 1.49	0.219 ± 0.234	0.69
Zn	175	0.01 - 0.66	0.054 ± 0.064	0.18
Fe	174	0.01 - 2.40	0.303 ± 0.398	1.10
TSS	2	1.00 - 1.00		
For 1978-Treated Wastewater				
Cr	144	0.0 - 0.70	0.059 ± 0.088	0.24
Cu	143	0.0 - 0.23	0.017 ± 0.020	0.06
Ni	143	0.0 - 1.03	0.147 ± 0.142	0.43
Zn	131	0.0 - 0.24	0.037 ± 0.034	0.11
Fe	144	0.0 - 1.76	0.200 ± 0.223	0.47
Total 1974-1979-Treated Wastewater				
Cr	1,288	0.0 - 0.56	0.038 ± 0.055	0.15
Cu	1,290	0.0 - 0.23	0.011 ± 0.016	0.04
Ni	1,287	0.0 - 1.88	0.184 ± 0.211	0.60
Zn	1,273	0.0 - 0.66	0.035 ± 0.045	0.13
Fe	1,287	0.0 - 3.15	0.402 ± 0.509	1.42
Raw Waste				
Cr	3	2.80 - 9.15	5.90	
Cu	3	0.09 - 0.27	0.17	
Ni	3	1.61 - 4.89	3.33	
Zn	2	2.35 - 3.39		
Fe	3	3.13 - 35.9	22.4	
TSS	2	177 - 446		

Table VII-20

PRECIPITATION-SETTLING-FILTRATION (LS&F) PERFORMANCE
PLANT C

Parameters	No. Points	Range mg/l	Mean ± Std. Dev.	Mean + 2 Std. Dev.
For Treated Wastewater				
Cd	103	0.010 - 0.500	0.049 ± 0.049	0.147
Zn	103	0.039 - 0.899	0.290 ± 0.131	0.552
TSS	103	0.100 - 5.00	1.244 ± 1.043	3.33
pH	103	7.1 - 7.9	9.2*	
For UnTreated Wastewater				
Cd	103	0.039 - 2.319	0.542 ± 0.381	1.304
Zn	103	0.949 - 29.8	11.009 ± 6.933	24.956
Fe	3	0.107 - 0.46	0.255	
TSS	103	0.80 - 19.6	5.616 ± 2.896	11.408
pH	103	6.8 - 8.2	7.6*	

*pH value is median of 103 values.

Table VII-21

SUMMARY OF TREATMENT EFFECTIVENESS (mg/l)

Pollutant Parameter	L&S Technology System				LS&F Technology System			
	Mean	One-Day Max.	10-Day Avg.	30-Day Avg.	Mean	One-Day Max.	10-Day Avg.	30-Day Avg.
114 Sb	0.70	2.87	1.27	1.13	0.034	0.14	0.06	0.06
115 As	0.51	2.09	0.86	0.83	0.34	1.39	0.57	0.55
117 Be	0.30	1.23	0.51	0.49	0.20	0.82	0.34	0.32
118 Cd	0.079	0.32	0.15	0.13	0.049	0.20	0.08	0.08
119 Cr	0.080	0.42	0.17	0.12	0.07	0.37	0.15	0.10
120 Cu	0.58	1.90	1.00	0.73	0.39	1.28	0.61	0.49
121 CN	0.07	0.29	0.12	0.11	0.047	0.20	0.08	0.08
122 Pb	0.12	0.15	0.13	0.12	0.08	0.10	0.09	0.08
123 Hg	0.06	0.25	0.10	0.10	0.036	0.15	0.06	0.06
124 Ni	0.57	1.41	1.00	0.75	0.22	0.55	0.37	0.29
125 Se	0.3	1.23	0.55	0.49	0.007	0.03	0.01	0.01
126 Ag	0.1	0.41	0.17	0.16	0.07	0.29	0.12	0.10
127 Th	0.50	2.05	0.84	0.81	0.34	1.40	0.57	0.55
128 Zn	0.30	1.33	0.56	0.41	0.23	1.02	0.42	0.31
Al	1.11	4.55	1.86	1.80	0.74	3.03	1.24	1.20
Co	0.05	0.21	0.09	0.08	0.05	0.21	0.09	0.08
F	14.5	59.5	26.4	23.5	9.46	38.8	15.8	15.3
Fe	0.41	1.23	0.63	0.51	0.28	1.23	0.63	0.51
Mn	0.21	0.43	0.34	0.27	0.14	0.30	0.23	0.19
P	4.08	16.7	6.83	6.60	2.72	11.2	4.6	4.4
O&G		20.0	12.0	10.0		10.0	10.0	10.0
TSS	12.0	41.0	20.0	15.5	2.6	15.0	12.0	10.0

Table VII-22

TREATABILITY RATING OF PRIORITY POLLUTANTS UTILIZING CARBON ADSORPTION

Priority Pollutant	*Removal Rating
1. acenaphthene	H
2. acrolein	L
3. acrylonitrile	L
4. benzene	M
5. benzidine	H
6. carbon tetrachloride (tetrachloromethane)	M
7. chlorobenzene	H
8. 1,2,4-trichlorobenzene	H
9. hexachlorobenzene	H
10. 1,2-dichloroethane	M
11. 1,1,1-trichloroethane	M
12. hexachloroethane	H
13. 1,1-dichloroethane	M
14. 1,1,2-trichloroethane	M
15. 1,1,2,2-tetrachloroethane	H
16. chloroethane	L
17. bis(chloromethyl)ether	-
18. bis(2-chloroethyl)ether	M
19. 2-chloroethyl vinyl ether (mixed)	L
20. 2-chloronaphthalene	H
21. 2,4,6-trichlorophenol	H
22. parachlorometa cresol	H
23. chloroform (trichloromethane)	L
24. 2-chlorophenol	H
25. 1,2-dichlorobenzene	H
26. 1,3-dichlorobenzene	H
27. 1,4-dichlorobenzene	H
28. 3,3'-dichlorobenzidine	H
29. 1,1-dichloroethylene	L
30. 1,2-trans-dichloroethylene	L
31. 2,4-dichlorophenol	H
32. 1,2-dichloropropane	M
33. 1,2-dichloropropylene (1,3,-dichloropropene)	M
34. 2,4-dimethylphenol	H
35. 2,4-dinitrotoluene	H
36. 2,6-dinitrotoluene	H
37. 1,2-diphenylhydrazine	H
38. ethylbenzene	M
39. fluoranthene	H
40. 4-chlorophenyl phenyl ether	H
41. 4-bromophenyl phenyl ether	H
42. bis(2-chloroisopropyl)ether	M
43. bis(2-chloroethoxy)methane	M
44. methylene chloride (dichloromethane)	L
45. methyl chloride (chloromethane)	L
46. methyl bromide (bromomethane)	L
47. bromoform (tribromomethane)	H
48. dichlorobromomethane	M
49. trichlorofluoromethane	M
50. dichlorodifluoromethane	L
51. chlorodibromomethane	M
52. hexachlorobutadiene	H
53. hexachlorocyclopentadiene	H
54. isophorone	H
55. naphthalene	H
56. nitrobenzene	H
57. 2-nitrophenol	H
58. 4-nitrophenol	H
59. 2,4-dinitrophenol	H
60. 4,6-dinitro-o-cresol	H
61. N-nitrosodimethylamine	M
62. N-nitrosodiphenylamine	H
63. N-nitrosodi-n-propylamine	M
64. pentachlorophenol	H
65. phenol	M
66. bis(2-ethylhexyl)phthalate	H
67. butyl benzyl phthalate	H
68. di-n-butyl phthalate	H
69. di-n-octyl phthalate	H
70. diethyl phthalate	H
71. dimethyl phthalate	H
72. 1,2-benzanthracene (benzo (a)anthracene)	H
73. benzo(a)pyrene (3,4-benzo-pyrene)	H
74. 3,4-benzofluoranthene (benzo(b)fluoranthene)	H
75. 11,12-benzofluoranthene (benzo(k)fluoranthene)	H
76. chrysene	H
77. acenaphthylene	H
78. anthracene	H
79. 1,12-benzoperylene (benzo (ghi)-perylene)	H
80. fluorene	H
81. phenanthrene	H
82. 1,2,5,6-dibenzathracene (dibenzo (a,h) anthracene)	H
83. indeno (1,2,3-cd) pyrene (2,3-o-phenylene pyrene)	H
84. pyrene	-
85. tetrachloroethylene	M
86. toluene	M
87. trichloroethylene	L
88. vinyl chloride (chloroethylene)	L
106. PCB-1242 (Arochlor 1242)	H
107. PCB-1254 (Arochlor 1254)	H
108. PCB-1221 (Arochlor 1221)	H
109. PCB-1332 (Arochlor 1232)	H
110. PCB-1248 (Arochlor 1248)	H
111. PCB-1260 (Arochlor 1260)	H
112. PCB-1016 (Arochlor 1016)	H

* NOTE: Explanation of Removal RAtings

Category H (high removal)
adsorbs at levels $\geq$ 100 mg/g carbon at C_f = 10 mg/l
adsorbs at levels $\geq$ 100 mg/g carbon at C_f < 1.0 mg/l

Category M (moderate removal)
adsorbs at levels $\geq$ 100 mg/g carbon at C_f = 10 mg/l
adsorbs at levels $\leq$ 100 mg/g carbon at C_f < 1.0 mg/l

Category L (low removal)
adsorbs at levels < 100 mg/g carbon at C_f = 10 mg/l
adsorbs at levels < 10 mg/g carbon at C_f < 1.0 mg/l

C_f = final concentrations of priority pollutant at equilibrium

Table VII-23

CLASSES OF ORGANIC COMPOUNDS ADSORBED ON CARBON

Organic Chemical Class	Examples of Chemical Class
Aromatic Hydrocarbons	benzene, toluene, xylene
Polynuclear Aromatics	naphthalene, anthracene bephenyls
Chlorinated Aromatics	chlorobenzene, polychlorinated biphenyls, aldrin, endrin, toxaphene, DDT
Phenolics	phenol, cresol, resorcenol and polyphenyls
Chlorinated Phenolics	trichlorophenol, pentachlorophenol
High Molecular Weight Aliphatic and Branch Chain Hydrocarbons	gasoline, kerosine
Chlorinated Aliphatic Hydrocarbons	carbon tetrachloride, perchloroethylene
High Molecular Weight Aliphatic Acids and Aromatic Acids	tar acids, benzoic acid
High Molecular Weight Aliphatic Amines and Aromatic Amines	aniline, toluene diamine
High Molecular Weight Ketones, Esters, Ethers and Alcohols	hydroquinone, polyethylene glycol
Surfactants	alkyl benzene sulfonates
Soluble Organic Dyes	melkylene blue, Indigo carmine

High Molecular Weight includes compounds in the broad range of from 4 to 20 carbon atoms.

Table VII-24

ACTIVATED CARBON PERFORMANCE

Type of Industry	Pollutant Parameter	Mean Pollutant Levels ug/l In	Out
NFM	Fluoranthene	55	13
Foundries	N-nitrosodiphenylamine	250	190
NFM	Benzo(a)anthracene	13	0.7
NFM	Chrysene	160	3.8
NFM	Anthracene	43	6.6
NFM	Phenanthrene	46	4.6
NFM	Pyrene	130	11

Table VII-25

ION EXCHANGE PERFORMANCE
(All Values mg/l)

Parameter	Plant A		Plant B	
	Prior to Purification	After Purification	Prior to Purification	After Purification
Al	5.6	0.20	--	--
Cd	5.7	0.00	--	--
Cr+3	3.1	0.01	--	--
Cr+6	7.1	0.01	--	--
Cu	4.5	0.09	43.0	0.10
CN	9.8	0.04	3.40	0.09
Au	--	--	2.30	0.10
Fe	7.4	0.01	--	--
Pb	--	--	1.70	0.01
Mn	4.4	0.00	--	--
Ni	6.2	0.00	1.60	0.01
Ag	1.5	0.00	9.10	0.01
SO_4	--	--	210.00	2.00
Sn	1.7	0.00	1.10	0.10
Zn	14.8	0.40	--	--

Table VII-26

PEAT ADSORPTION PERFORMANCE

Pollutant	Influent (mg/l)	Effluent (mg/l)
Cr+6	35,000	0.04
Cu	250	0.24
CN	36.0	0.7
Pb	20.0	0.025
Hg	1.0	0.02
Ni	2.5	0.07
Ag	1.0	0.05
Sb	2.5	0.9
Zn	1.5	0.25

Table VII-27

MEMBRANE FILTRATION SYSTEM EFFLUENT

Specific Metal	Manufacturer's Guarantee	Plant 19066 In	Plant 19066 Out	Plant 31022 In	Plant 31022 Out	Predicted Performance
Al	0.5	--	--	--	--	--
Cr,(+6)	0.02	0.46	0.01	5.25	<0.005	--
Cr (T)	0.03	4.13	0.018	98.4	0.057	0.05
Cu	0.1	18.8	0.043	8.00	0.222	0.20
Fe	0.1	288	0.3	21.1	0.263	0.30
Pb	0.05	0.652	0.01	0.288	0.01	0.05
CN	0.02	<0.005	<0.005	<0.005	<0.005	0.02
Ni	0.1	9.56	0.017	194	0.352	0.40
Zn	0.1	2.09	0.046	5.00	0.051	0.10
TSS	--	632	0.1	13.0	8.0	1.0

Table VII-28

ULTRAFILTRATION PERFORMANCE

Parameter	Feed (mg/l)	Permeate (mg/l)
Oil (freon extractable)	95	22*
	1,540	52*
	1,230	4
COD	8,920	148
TSS	791	19*
	1,262	26*
	5,676	13*
	1,380	13
Total Solids	2,900	296

*From samples at aluminum forming Plant B.

SECTION VIII

COSTS, ENERGY, AND NONWATER QUALITY ASPECTS

Cost information for the suggested treatment models (selected in Sections IX and X) is presented in the following discussion. Several levels of effluent reduction are presented for each waste stream in every subcategory.

Capital and annual costs corresponding to alternative treatment levels have been determined for each plant in the aluminum forming category that reported wastewater discharge. Nonwater quality aspects composed of sludge handling and disposal are also discussed. Energy costs associated with each control and treatment option are discussed as well. A separate analysis of the economic impact of the alternatives for effluent limitations and guidelines on the industry will be published in a separate document.

BASIS FOR COST ESTIMATION

Sources of Cost Data

Capital and annual cost data for the selected treatment processes were collected from four sources: (1) literature, (2) data collection portfolios, (3) equipment manufacturers, and (4) in-house design projects. The majority of the cost information was obtained from literature sources. Many of the literature sources cited obtained their costs from surveys of actual design projects. For example, Black & Veatch prepared a cost manual that used design and construction cost data from 76 separate projects as a basis for establishing average construction costs. Data collection portfolios completed by companies in the aluminum forming category contained a limited amount of chemical and unit process cost information. Most of the dcp's did not include treatment plant capital and annual cost information, and reported information was for the entire treatment plant. Therefore, little data from the data collection portfolios was applicable for the determination of individual unit process costs. Additional data was obtained from equipment manufacturers and design projects performed by Sverdrup & Parcel and Associates.

Determination of Costs

To determine capital and annual costs for the selected treatment technologies, cost data from all sources were plotted on a graph of capital or annual costs versus a design parameter (usually flow). These data were usually spread over a range of flows. Unit process cost data gathered from all sources include a variety of auxiliary equipment, basic construction materials, and

geographical locations. A single line was fitted to the data points thus arriving at a final cost curve closely representing an average of all the cost references for a unit process. Since the cost estimates presented in this section must be applicable to treatment needs in varying circumstances and geographic locations, this approach was felt to be the best for determining national treatment costs. For consistency in determining costs, accuracy in reading the final cost curves, and in order to present all cost relationships concisely, equations were developed to represent the final cost curves. Capital and annual cost equations are listed in Table VIII-1.

All cost information was standardized by backdating or updating the costs to first quarter 1978. Two indices were used: (1) EPA - Standard Treatment Plant index and (2) EPA - Large City Advanced Treatment (LCAT) index. The national average, rather than an index value for a particular city, was used for the EPA-LCAT index. The national average was used because the regional differential of the supporting cost data was dampened by averaging the cost data.

Capital. All capital cost equations include:

(1) Major and auxiliary equipment
(2) Piping and pumping
(3) Shipping
(4) Sitework
(5) Installation
(6) Contractors' fees
(7) Electrical and instrumentation
(8) Enclosure
(9) Yard piping
(10) Engineering
(11) Contingency

Items (1) through (7) are included to the extent that they are provided for in each source in the literature. In cases where a certain item(s) is missing, an estimate is made in order to average the cost values. Enclosure costs are estimated separately and are included only for those technologies' performances deemed subject to weather conditions. Contingencies and engineering are assumed to be 15 and 10 percent, respectively, of the installed equipment cost. Yard piping is estimated at 10 percent of the installed equipment cost.

The cost of land has not been considered in the cost estimates. Based on engineering visits at 22 aluminum forming plants, it is believed that most wastewater treatment and supporting facilities can be constructed in existing buildings or on land currently owned by the plants. Also, the plant wastewater flows in the aluminum forming category are low (majority of plants less than 50,000 gpd); thus, land requirements are small for most plants.

For new plants, the amount of land necessary to house the wastewater treatment system is assumed to be insignificant relative to other capital costs. This is particularly true since the plant design would optimize the space available.

The nonwater quality aspects associated with capital costs include sludge handling for precipitation and skimming systems generating large quantities. Capital investment is required only for systems generating greater than 140,000 gallons per year in order to dewater the sludge prior to hauling. This is based on economic assessment of the break point for sludge hauling and landfilling. The 140,000 gallon per year volume is the volume at which contract hauling at a cost of thirty cents per gallon (discussed later in this section) would equal the investment costs for a vacuum filtration system. Investment includes costs for vacuum filtration and holding tanks. See the cost calculation example for further detail.

Annual. All annual cost equations include:

- Operation and maintenance labor
- Operation and maintenance materials
- Energy
- Chemicals

Operation and maintenance labor requirements for each unit process were recorded from all data sources in terms of manhours per year. A labor rate of 20 dollars per manhour, including fringe benefits and plant overhead, was used to convert the manhour requirements into an annual cost.

Operation and maintenance material costs account for the replacement, repair, and routine maintenance of all equipment associated with each unit process. Material costs were developed solely from data reported in the literature.

Electrical energy requirements for process equipment were tabulated in terms of kilowatt-hours per year. The cost of electricity used is 4.0 cents per kilowatt-hour, based on the average value of electricity costs as reported in the aluminum forming category data collection portfolios. Fuel oil and natural gas costs used were also obtained from the data collection portfolios. The average fuel oil cost was 26 cents per therm and the average natural gas cost was 22 cents per therm.

Chemicals used in the treatment processes presented in this section are sulfuric acid and caustic for pH adjustment, hydrated lime for heavy metals precipitation, sulfur dioxide for hexavalent chromium reduction, and alum and polymer for emulsion breaking.

Although not included in the annual cost equations, amortization, depreciation, and sludge disposal are considered in the plant-by-plant cost analysis. See the example which follows in this section.

Capital costs are amortized over a 10-year period at 12 percent interest. The corresponding capital recovery factor is 0.177. The annual cost of depreciation was calculated on a straight line basis over a 10-year period.

Many of the unit processes chosen as treatment technologies produce a residue or sludge that must be discarded. Sludge disposal costs presented in this section are based on charges made by private contractors for sludge hauling services. Costs for hauling vary with a number of factors including quantity of sludge to be hauled, distance to disposal site, disposal method used by the contractor, and variation in landfill policy from state to state. Costs for contractor hauling of sludges are based on data collected in the development of effluent guidelines for the paint industry in which 511 plants reported contractor hauling information.

A cost of 30 cents per gallon was used for the paint guideline development as a sludge hauling and landfilling cost and is used in this report. This value is conservative since many sludges hauled in the paint industry are considered hazardous wastes and require more expensive landfilling facilities relative to landfill facilities required for nonhazardous wastes.

Cost Data Reliability

To check the validity of the capital cost data, the capital costs developed for this guideline were compared to capital costs reported in the data collection portfolios. As stated earlier, the cost information reported in the data collection portfolios was for treatment systems rather than individual unit processes and therefore was not used to develop costs for existing treatment facilities in the aluminum forming category.

Nineteen plants reported treatment system capital cost information. The total reported capital cost for all 19 facilities is equal to $3,600,000. The sum of the costs developed as determined for the 19 treatment systems is equal to $4,300,000. Therefore, although variations at individual plants were occasionally much greater, the overall difference of capital costs was 19 percent, with these cost estimates being on the conservative side. Detailed design parameters (i.e., retention times, chemical dosages, etc.) for the data collection portfolio treatment systems were seldom reported. Therefore, the costs

developed in this section are based on one set of design parameters which may differ from the design parameters actually used at the 19 plants which reported cost information. This could result in large variances at individual facilities, but the effect of the possible design differences is dampened when a large number of facilities are considered as is indicated by the 19 percent difference in costs for the 19 treatment systems studied.

TREATMENT TECHNOLOGIES AND RELATED COSTS

Costs have been determined for the following wastewater treatment and sludge disposal technologies to be used in the various treatment alternatives:

- Skimming
- Chemical emulsion breaking
- Dissolved air flotation
- Thermal emulsion breaking
- Multimedia filtration
- pH adjustment
- Lime and settle (L&S)
- Hexavalent chromium reduction
- Cyanide oxidation
- Cyanide precipitation
- Activated carbon adsorption
- Vacuum filtration
- Contractor hauling
- Countercurrent cascade rinsing
- Regeneration of chemical baths

Costs have also been determined for the following items which relate to the operation of a treatment plant:

- Flow equalization
- Pumping
- Holding tank
- Recycle
- Monitoring

A discussion of the design parameters used and major and auxiliary equipment associated with each treatment technology and related items is contained below.

Skimming

Skimming is included as a wastewater treatment option to remove free oils commonly found in aluminum forming plants. The equipment used as the basis for developing capital and annual costs for skimming are as follows:

- Gravity separation basin
- Oil skimmer
- Bottom sludge scraper

It is assumed that the oil to be removed has a specific gravity of 0.85 and a temperature of 20°C. Sludge quantities, in terms of gallons of sludge per 1,000 gallons of wastewater generated, are tabulated in Table VIII-2, based on sampling data. The basis for energy requirements is the use of a 1/2-HP motor for skimming based on 100 gal/hr of oil.

Chemical Emulsion Breaking

Alum and polymer addition to wastewater aids in the separation of oil from water, as discussed in Section VII (p. 627). To determine the capital and annual costs, 400 mg/l of alum and 10 mg/l of polymer are assumed to be added to waste streams containing such emulsified oils as spent rolling emulsions. The equipment included in the capital and annual costs are as follows:

- Chemical feed system

  1. Storage units
  2. Dilution tanks
  3. Conveyors and chemical feed lines
  4. Chemical feed pumps

- Rapid mix tank (detention time, 5 minutes)

  1. Tank
  2. Mixer
  3. Motor drive unit

- Skimming

  1. Gravity separation basin
  2. Surface skimmer
  3. Bottom sludge scraper

Costs were derived based on a composite of various systems which included the above equipment. Alum and polymer costs were obtained from vendors: dry alum at $0.15 per pound and polymer at $3.00 per pound. Energy requirements were also composited from various literature sources to be included in the annual costs.

Dissolved Air Flotation

Dissolved air flotation (DAF) can be used by itself, in conjunction with gravity separation for the removal of free oil, or also in conjunction with coagulant and flocculant addition to increase oil removal efficiency. The capital and annual cost equations in Table VIII-1 provide costs only for the dissolved air flotation unit; other systems, such as flocculant addition, may be added in separately.

The equipment used to develop capital and annual costs for the DAF system is as follows:

- Flotation unit
- Surface skimmer
- Bottom sludge scraper
- Pressurization unit
- Recycle pump
- Electrical and instrumentation
- Concrete pad, 1 ft. thick

Basic assumptions include a hydraulic loading of 2 GPM/ft^2 and a recycle ratio of 30 percent. All costs and energy requirements were derived as composites of various sytems presented in the literature. Energy requirements are estimated to range from 54,000 Kw-hr/yr at 30,000 GPD to 35,000,000 Kw-hr/yr at 10 MGD. Below 30,000 GPD flowrate, energy requirements are considered to be constant.

Thermal Emulsion Breaking

Thermal emulsion breaking is used to treat spent emulsion wastes potentially yielding a salable oil by-product. The system and its components which were costed for this technology is described in detail in Section VII. Standard "off the shelf" thermal emulsion breaking systems were costed. The Agency believes that custom design to account for site specific requirements might significantly reduce the overall cost. A separate boiler was costed for heat supply to the unit. Equipment sizing was based on continuous operation. Influent oil concentration was assumed to be 5 percent and the effluent, 80 percent. For economic assessment purposes, a credit of $0.20 per gallon of treated oil was assumed.

In determining annual costs, the energy requirements were calculated using 1.5 pounds of steam per pound of water evaporated. In practice, low-grade waste heat may be available to support the thermal emulsion breaking process. To be conservative; however, capital and annual costs include the boiler operation. The usage of energy was found to range from 8,500 therms/year at 150 GPD to 680,000 therms/year at 12,000 GPD.

Multimedia Filtration

Multimedia filtration is used as a wastewater treatment polishing device to remove suspended solids not removed in previous treatment processes. The filter beds consist of graded layers of gravel, coarse anthracite coal, and fine sand. The equipment used to determine capital and annual costs are as follows:

- Filter tank and media
- Surface wash system
- Backwash system
- Valves
- Piping
- Controls
- Electrical system

The filters were sized based on a hydraulic loading rate of 4 gpm/ft^2, and pumps were sized based on a backwash rate of 16 gpm/ft^2. All costs and energy requirements were derived as a composite of a variety of literature sources and vendor contacts. Energy requirements for the filtration operation are estimated to range from 300 Kw-hr/yr at 1,000 GPD to 300,000 Kw-hr/yr at 10 MGD. Energy requirements are constant between 1,000 GPD and 10,000 GPD.

pH Adjustment

The adjustment of pH is particularly important for treatment of wastewater streams such as cleaning or etching streams. Sulfuric acid and caustic are used as the chemical agents for addition to the wastewater stream. The following equipment are used in determining capital and annual costs:

- Chemical feed system
  - -- Bulk storage tank
  - -- Dry tank
  - -- Mixer
  - -- Flow regulator
- Concrete tank (detention time, 15 minutes)
- Mixing equipment
- Instrumentation
- Sump pump

Operating costs are based on the following assumptions:

- Sulfuric acid dose rate of 0.5 pound per 1,000 gallons of wastewater.
- Caustic dose rate of 0.5, 5, and 20 pounds per 1,000 gallons of wastewater.
- Caustic (NaOH) cost of $175 per ton for 50 percent solution (Chemical Marketing Reporter).
- Sulfuric acid cost of $41 per ton for 63 percent solution (Chemical Marketing Reporter).

Labor and energy costs were assumed to be equal for all alkali and acid dose rates. Energy requirements on a system basis are linear from 10,000 GPD to 500,000 GPD at 660 Kw-hr/yr and increase to 14,000 Kw-hr/yr at 10 MGD.

Lime and Settle (L&S)

Quicklime (CaO) or hydrated lime [$Ca(OH)_2$] can be used to precipitate heavy metals. Hydrated lime is commonly used for wastewaters with low lime requirements since the use of slakers, required for quickline usage, is practical only for large-volume application of lime. Wastewater sampling data were analyzed to determine lime dosage requirements and sludge production for those waste streams in the aluminum forming category that contain heavy metals selected as pollutants. The results of this analysis are tabulated in Table VIII-3. Due to the low lime dosage requirements in this industry, hydrated lime is used for costing.

The pH of waste streams treated with lime precipitation may require readjustment before discharge. Sulfuric acid is used to adjust the pH to an acceptable discharge level (pH 6 to 9). Thus, hydrated lime, sulfuric acid storage and feed systems, and a clarifier are included in the lime and settle capital and annual costs. Optional treatment systems which have been costed separately and which may be used in conjunction with the above lime and settle systems are a polymer feed system and flocculator.

The following equipment were included in the determination of capital and annual costs based on continuous operation:

- Lime feed system
  - -- Storage units
  - -- Dilution tanks
  - -- Feed pumps

- Clarifier (hydraulic loading rate of 0.5 gpm/ft^2)

- Acid neutralization system

  -- Storage units
  -- Mixer
  -- Flow regulator
  -- Instrumentation

Other annual cost bases are as follows:

- Lime dosage rates include 200 mg/l and 2,000 mg/l.

- Hydrated lime cost of $35.75 per ton (Chemical Marketing Reporter).

The lime dosage was selected based on raw wastewater characteristics. Those waste streams with low contaminant levels required 200 mg/l of lime. Those with higher contaminant levels required 2,000 mg/l. The lime dosages used for each waste stream are summarized in Table VIII-3.

Cost equations are presented for both of the above lime dosage rates. All cost equations and energy requirements for lime and settle were based on composited values of various systems. Energy requirements which were found to vary with flowrate are estimated to range from 2,000 Kw-hr/yr at 1 GPM to 225,000 Kw-hr/yr at 10,000 GPM.

Hexavalent Chromium Reduction

Chromium present in aluminum forming wastewaters is considered to be in the hexavalent state. The addition of sulfur dioxide at low pH values reduces hexavalent chromium to trivalent chromium, which forms a precipitate. The equipment included in the capital and annual costs are as follows:

- Reaction vessel (detention time, 45 minutes)
- Sulfuric acid storage and feed system
- Sulfonator
- Oxidation reduction potential meter
- Associated pressure regulator and appurtenances

This system has been costed both on a continuous and batch basis. The composite-based capital cost equations presented in Table VIII-1 include batch operation for flows greater than 0.2 gpm and less than 20 gpm. Above 20 gpm, the system is continuous.

Operation and maintenance costs include labor, chemicals, and repair parts. The labor rate used is $20.00 per manhour; it is estimated that supply and labor costs contribute equally to the O&M cost.

Energy requirements include electricity for pumps, mixers, and monitors. The combined energy requirement for this equipment was determined to be constant over the range of flowrates at 9,480 Kw-hr/yr.

Cyanide Oxidation

In this technology, cyanide is destroyed by reaction with sodium hypochlorite under alkaline conditions. A complete system for this operation includes reactors, sensors, controls, mixers, and chemical feed equipment. Control of both pH and chlorine concentration [through oxidation reduction potential (ORP)] is important for effective treatment.

Capital costs for cyanide oxidation as shown in Table VIII-1 include reaction tanks, reagent storage, mixers, sensors, and controls necessary for operation. Costs are estimated for both batch and continuous systems, with the operating mode selected on a least cost basis. Specific costing assumptions are as follows:

For both continuous and batch treatment, the cyanide oxidation tank is sized as an above-ground cylindrical tank with a retention time of four hours based on the process flow. Cyanide oxidation is normally done on a batch basis; therefore, two identical tanks are employed. Cyanide is removed by the addition of sodium hypochlorite with sodium hydroxide added to maintain the proper pH level. A 60-day supply of sodium hypochlorite is stored in an in-ground covered concrete tank, 0.3 m (1 ft) thick. A 90-day supply of sodium hydroxide also is stored in an in-ground covered concrete tank, 0.3 m (1 ft) thick.

Mixer power requirements for both continuous and batch treatment are based on 2 horsepower for every 11,355 liters (3,000 gal) of tank volume. The mixer is assumed to be operational 25 percent of the time that the treatment system is operating.

A continuous control system is costed for the continuous treatment alternative. This system includes:

- 2 immersion pH probes and transmitters
- 2 immersion ORP probes and transmitters
- 2 pH and ORP monitors
- 2 2-pen recorders
- 2 slow process controllers
- 2 proportional sodium hypochlorite pumps

- 2 proportional sodium hydroxide pumps
- 2 mixers
- 3 transfer pumps
- 1 maintenance kit
- 2 liquid level controllers and alarms and miscellaneous electrical equipment and piping

A complete manual control system is costed for the batch treatment alternative. This system includes:

- 2 pH probes and monitors
- 1 mixer
- 1 liquid level controller and horn
- 1 proportional sodium hypochlorite pump
- 1 on-off sodium hydroxide pump and PVC piping from the chemical storage tanks

Operation and maintenance costs for cyanide oxidation include labor requirements to operate and maintain the system, electric power for mixers, pumps, controls, and treatment chemicals. Labor requirements for operation are substantially higher for batch treatment than for continuous operation. Maintenance labor requirements for continuous treatment are fixed at 150 manhours per year for flow rates below 23,000 gph and thereafter increase according to:

$$\text{Labor} = .00273 \times (\text{Flow} - 23{,}000) + 150$$

Maintenance labor requirements for batch treatment are assumed to be negligible.

Annual costs for treatment chemicals are determined from cyanide concentration, acidity, and flow rates of the raw waste stream according to:

$$\text{lbs sodium hypochlorite} = 62.96 \times \text{lbs CN}$$

Cyanide Precipitation

In this wastewater treatment technology, cyanide is reacted with ferrous sulfate at pH 9.0 to form a variety of precipitates that may best be represented as $Fe_4(FeCN_6)_3$ (Prussian Blue). This system, which closely resembles a conventional chemical precipitation operation, includes chemical feed equipment for sodium hydroxide and ferrous sulfate addition, a reaction vessel, agitator, control system, clarifier, and pumps.

Costs are estimated for both batch and continuous systems with the operating mode selected on a least cost basis. This decision is a direct function of flowrate. Capital costs are composed of

five subsystem costs: (1) $FeSO_4$ feed system, (2) NaOH feed system, (3) reaction vessel with agitator, (4) clarifier, and (5) recycle pump. These subsystems include the following equipment:

(1) Ferrous sulfate feed system

- ferrous sulfate steel storage hoppers with dust collectors (largest hopper size is 6,000 ft^3; 15 days storage)
- enclosure for storage tanks
- volumetric feeders (small installations)
- mechanical weigh belt feeders (large installations)
- dissolving tanks (5 minute detention time, 6 percent solution)
- dual-head diaphragm metering pumps
- instrumentation and controls

(2a) Caustic feed system (less than 200 lb/day usage)

- volumetric feeder
- mixing tank with mixer (24-hour detention, 10 percent solution)
- feed tank with mixer (24-hour detention)
- dual-head metering pumps
- instrumentation and controls

(2b) Caustic feed system (greater than 200 lb/day usage)

- storage tanks (15 days, FRP tanks)
- dual-head metering pumps including standby pump
- instrumentation and controls

(3) Reaction tank (5 minutes detention time, stainless steel, agitator mounting, agitator, concrete slab)

(4) Clarifier [based on 700 GPD/ft^2; to include a steel or concrete vessel (depending on flow rate), support structure, sludge scraper assembly and drive unit]

(5) Recycle pumps (for sludge and/or supernatant)

Operation and maintenance costs for cyanide precipitation include labor requirements to operate and maintain the system, electric power for mixers, pumps, clarifier and controls, and treatment chemicals. Electrical requirements are also included for the chemical storage enclosures for lighting and ventilation and in the case of caustic storage, heating. The following criteria are used in establishing O&M costs:

(1) Ferrous sulfate feed system

- maintenance materials - 3 percent of manufactured equipment cost
- labor for chemical unloading
  --5 hrs/50,000 lb for bulk handling
  --8 hrs/16,000 lb for bag feeding to the hopper
  --routine inspection and adjustment of feeders is 10 min/feeder/shift
- maintenance labor
  --8 hrs/yr for liquid metering pumps
  --24 hrs/yr for solid feeders and solution tank
- power [function of instrumentation and control, metering pump HP and volumetric feeder (bag feeding)]

(2) Caustic feed system

- maintenance materials - 3 percent of manufactured equipment cost (excluding storage tank cost)
- labor/unloading
  --dry NaOH - 8 hrs/16,000 lb
  --liquid 50 percent NaOH - 5 hrs/50,000 lb
- labor operation (dry NaOH only) - 10 min/day/feeder
- labor operation for metering pump - 15 min/day
- annual maintenance - 8 hrs
- power [includes metering pump HP, instrumentation and control, volumetric feeder (dry NaOH)]

(3) Clarifier

- maintenance materials range from 0.8 percent to 2 percent as a function of increasing size
- labor - 150 to 500 hrs/yr (depending on size)
- power - based on horsepower requirements for sludge pumping and sludge scraper drive unit

(4) Reaction vessel with agitator

- maintenance materials - 2 percent of equipment cost
- labor
  --15 min/mixer/day routine O&M
  --4 hrs/mixer/6 mos - oil changes
  --8 hrs/yr - draining, inspection, cleaning
- power - based on horsepower requirements for agitator

(5) Recycle pump

- maintenance materials - percent of manufactured equipment cost variable with flowrate
- 50 ft TDH; motor efficiency of 90 percent and pump efficiency of 85 percent

Annual costs for treatment chemicals are determined from cyanide concentration, pH, metals concentrations, and flowrate of the raw waste stream.

Activated Carbon Adsorption

Activated carbon is used primarily for the removal of organic compounds from wastewater. The capital and annual costs for this process are based on a system using granular activated carbon (GAC) in a series of downflow contacting columns. Separate cost equations are presented for GAC contacting units and GAC replacement.

Two methods of replacing spent carbon were considered: (1) thermal regeneration of spent carbon and (2) replacement of spent carbon with new carbon and disposal of spent carbon. Thermal regeneration of spent activated carbon is economically practical only at relatively large carbon exhaustion rates. Simply replacing spent carbon with new carbon is more practical than thermal regeneration for plants with low carbon usage.

An economic analysis was performed to determine the carbon usage rate at which thermal regeneration of spent carbon becomes practical. It was determined that thermal regenerating facilities are practical above a carbon usage of 400,000 lbs per year. Carbon exhaustion rates for all waste streams are presented in Table VIII-4. Data from the literature were analyzed to determine a relationship between TOC concentration and carbon exhaustion rate. These data were applied to sampling data to obtain the carbon exhaustion rates shown in Table VIII-4.

A 30-minute empty-bed contact time was used to size the downflow contacting units. The activated carbon used in the columns was assumed to have a bulk density of 26 pounds per cubic foot and cost 53 cents per pound. Included in the capital for a carbon contacting system are carbon contacting columns, initial carbon fill, carbon inventory and storage backwash system, and wastewater pumping.

Thermal regeneration is assumed to be accomplished with multiple hearth furnaces at a loading rate of 40 pounds of carbon per square foot of hearth area per day. Activated carbon thermal regeneration facilities include a multiple hearth furnace, spent

carbon storage and dewatering equipment, quench tank, screw conveyors, and regenerated carbon refining and storage tanks.

Energy requirements for activated carbon systems are two-fold: heating for thermal regeneration (above 400,000 lbs carbon used per year) and electricity. The Btu requirements for heating range from 1×10^{10} Btu/yr at 400,000 lbs carbon to 2.1×10^{11} Btu/yr at 30×10^6 lbs carbon. Electrical requirements are from 250,000 Kw-hr/yr at 200,000 lbs carbon up to 1.5×10^6 Kw-hr/yr at 30×10^6 lbs carbon.

Vacuum Filtration

Vacuum filtration is a technology utilized in sludge dewatering. This system is included in the wastewater treatment train depending on the amount of sludge generated from precipitation systems. Per the discussion presented in the costing example, vacuum filtration is costed if sludge generation exceeds 140,000 gallons per year. Below this value, it is not economically attractive to dewater the sludge prior to disposal.

Capital costs are based on the area of filter required, or a solids loading rate of 4 pounds per hour per square foot, and an operating period of six hours per day. The equipment included in the vacuum filtration unit are as follows:

- Motor and drive
- Auxiliaries
- Piping and ductwork
- Instrumentation
- Electrical
- Insulation
- Paint
- Accessories
- Vacuum system

A minimum capital cost based on flow rate of $66,000 is assumed. Annual costs were developed in terms of the amount of sludge to be dewatered. The assumed influent suspended solids concentration is 7 percent and the effluent, 30 percent. Energy requirements are based on filter size and flow rate, as in the case of capital costs. These are estimated to range from 45,000 Kw-hr/yr for 100 ft^2 filter area to 268,000 Kw-hr/yr for 960 ft^2.

Contractor Hauling

As stated previously, information obtained from 511 plants in an EPA Effluent Guidelines Division study of the paint industry was used to determine contractor hauling costs. Costs in the paint study ranged from 1 cent to over 50 cents per gallon. A value of

30 cents per gallon, selected as a reasonable estimate in the paint study, was used in the development of the aluminum forming guidelines to determine the disposal cost of sludge and wastewater by contractor hauling.

Countercurrent Cascade Rinsing

Countercurrent cascade rinsing is a technique used to reduce wastewater flows from rinsing operations. This technology has been described in detail in Section VII (p. 679).

Capital costs are based on the number of tanks required to achieve a required flow reduction and pumping if water cannot be moved between the tanks by gravity flow. Each tank is assumed to be a rectangular tank, 15 feet by 5 feet, which is 8 feet deep. Capital cost estimating for countercurrent cascade rinsing systems is highly site-specific. Tank sizing, in particular cross-sectional area, may be determined by or limited by the cross-sectional area of the workpiece. No piping costs are included since it is assumed that pumping will not be necessary since final rinse stage tanks can be easily raised or variable height overflow weirs can be installed in a single large tank to allow gravity flow of the rinse water. No retrofit land costs are included. Based on plant visits to 22 aluminum forming sites, the Agency believes that there is enough floor space for installation of countercurrent cascade rinsing operations at existing plants.

The capital expenditure involved in installing countercurrent cascade rinsing technology will be in part offset by reduced water use and sewer fees and the overall reduction in the size of the required waste treatment system, which is designed on the basis of volumetric flowrate.

There are no significant operation and maintenance costs associated with tanks so the annual cost estimates include only annual depreciation and amortization.

Regeneration of Chemical Baths

Bath regeneration is used to recover or replenish the bath chemicals, reduce contaminant levels in the bath, and to achieve zero discharge. As discussed in Section VII (p. 683), regeneration of chromic acid and sulfuric acid baths is accomplished through periodic addition of solid chromic acid or sulfuric acid. Salts formed in the bath constantly precipitate and must be drawn off the bottom of the tank. In general, there are no additional capital costs required for equipment to regenerate these types of baths. Removal of settled precipitates is accomplished by existing pumping equipment used for emptying the bath in plants not currently regenerating baths. Chemical costs associated with regeneration were costs for replenishing chromic acid and sulfuric acid.

For caustic baths, addition of lime and elevation of the bath temperature is required for regeneration. The Agency assumed that plants have sufficient waste heat available to elevate the bath temperature. Chemical costs associated with regeneration of caustic baths were costs for lime.

The capital expenditures required for recovering and reusing alkaline cleaning bath chemicals was the cost of an ultrafiltration system. Membrane life was assumed to be one year as a result of discussions with equipment manufacturers. The cost of the membranes was assumed to be $100 per membrane. One hour per week was used for maintenance labor. Alkaline cleaning chemicals were assumed to cost $0.50 per pound. In addition, the ultrafilter was assumed to be washed with a cleaner, one time each week. The cleaner cost was assumed to be $2.00 per pound.

In considering the costs discussed above associated with regeneration, EPA concluded that the costs incurred will be offset by decreased chemicals cost through recovery, reduced water use and sewer fees, the overall reduction in the size of the required treatment system, and the reduced labor requirements for maintaining the baths.

Flow Equalization

Flow equalization is used in order to minimize potentially wide fluctuations in raw wastewater flow and characteristics. Equalization has been included in the costs associated with each treatment option presented.

The equipment included in the capital and annual costs is an equalization tank with associated mixing equipment. The detention time assumed is four hours. For this technology, capital and annual costs were derived by compositing various system costs from the literature. Energy requirements are expected to range from 2,500 Kw-hr/yr at 1 gpm to 300,000 Kw-hr/yr at 10,000 gpm.

Pumping

The cost of pumping raw wastewater to a treatment plant was considered, as was the cost for a dry well enclosure of the pumping facility. Costs for wet wells have not been considered since the equalization basin for treatment plant operation can function as a wet well. The pump station electrical requirements are based on a total dynamic head of 30 feet and a pumping efficiency of 65 percent. These requirements are estimated to range from 54 Kw-hr/yr for 1,000 gpd to 550,000 Kw-hr/yr for 10 MGD flowrate.

Holding Tank

The cost of holding tanks has been considered for the storage of sludges removed from skimming, dissolved air flotation, and lime and settle operations. The equations can also be used for the storage of dewatered sludge cake. Allowances are made for storage of two weeks of sludge production to a minimum of 150 gallons for sludges requiring contractor hauling.

Recycle of Cooling Water

As discussed in Section VII (p. 675), direct chill casting contact cooling water is commonly recycled at rates of 96 percent or greater. For those plants that do not recycle direct chill casting contact cooling water, the cost of recycle has been determined. Recycle capital costs include a cooling tower, a pump station, and piping. The capital costs for a cooling tower assume the use of a mechanical draft tower. The sizing of the tower is based on a temperature range of 25°F, an approach of 10°F, and a wet bulb temperature of 70°F. The cooling tower equipment include the following:

- Cooling tower
- Basin
- Handling and setting (installation)
- Piping
- Concrete foundations and footings
- Instrumentation
- Plant mechanical draft system
- Accessories

A minimum cost is assumed to be $62,000. Energy requirements are a function of the fan size and horsepower required, depending on recirculation ratio. These requirements are estimated to range from 14,600 Kw-hr/yr at 0.1 MGD to 1,460,000 Kw-hr/yr at 10 MGD.

To account for recycle piping requirements, costs have been determined for 1,000 feet of installed force main. Capital costs for recycle piping include the following:

- Concrete-lined ductile iron pipe
- 3, 4, 8, 12, 16, or 24 inch pipe diameters
- 0, 10, 20, or 40 ft. static heads
- 3 feet per second water velocity

- Pipe fittings

  -- 3 gate valves
  -- 1 standard tee
  -- 4 long sweep elbows

- Installation with excavation and backfill (below ground)

Energy requirements for pumping are the same as those given above in the pumping discussion.

Enclosures

The cost of an enclosure is included in the capital cost equations for all unit processes except skimmming, equalization, lime and settle (lime and sulfuric acid storage and chemical feed systems are enclosed) and the cooling tower associated with recycle since the performance of these unit processes is not typically affected by inclement weather. The cost of enclosure includes the following:

- Roofing
- Insulation
- Sitework
- Masonary
- Glass
- Plumbing
- HVAC and electrical

The total capital cost is calculated by determining the required area to be enclosed and applying $30 per square foot.

Cost Calculation Example

Capital and annual costs for each of the treatment alternatives presented in Sections X and XII can be estimated both from the cost equations in Table VIII-1 and, depending on the alternative, from the data on oily sludge production, lime dosage and lime sludge production, and carbon exhaustion rate shown in Tables VIII-2 through VIII-4. Once the wastewater flows are determined, the costs associated with a treatment alternative are calculated systematically using the following steps.

1. Determine capital and annual costs for each of the treatment processes in the alternative using Table VIII-1.

2. Determine capital and operating costs for pumping, equalization, and monitoring using Table VIII-1.

3. Calculate daily production, if any, of oily sludge and lime sludge from Tables VIII-2 and VIII-3. Determine the costs associated with the disposal of these residues using Table VIII-1.

4. Determine total capital and annual costs for the alternative by summing up all cost data obtained in Steps 1 through 3. The annual cost so determined does not include amortization and depreciation of capital investment. Obtain the total annual cost by including 17.7 percent and 10 percent of the capital cost for amortization and depreciation, respectively.

As described previously, capital and operating costs associated with the lime and settle (L&S) and activated carbon processes are influenced by the lime dosage and carbon replacement requirements, respectively. Therefore, Tables VIII-3 and VIII-4 should be consulted first to determine lime dosage for the particular wastewater stream under consideration or to evaluate the economic choice between thermal regeneration and throwaway of spent carbon for the activated carbon process.

Disposal of lime sludge is based on vacuum filtration, with the resulting cake hauled by contractor or contractor-hauling of undewatered liquid sludge. The economic choice between these two methods depends upon the quantity of sludge requiring disposal, with the dividing line being approximately 140,000 gallons per year. Direct contractor-hauling of liquid sludge is less expensive for smaller sludge quantities, while the opposite is true for greater sludge quantities. The cost components for the former are holding tank capital cost (minimum capacity, 150 gallons) and contractor-hauling cost, while those for the latter are holding tank capital cost (both for liquid sludge and cake), vacuum filtration cost, and contractor-hauling cost for cake. The cost components for oily sludge disposal are holding tank capital cost (minimum capacity, 150 gallons) and contractor-hauling cost.

The cost calculating procedures described above are illustrated for a plant in the Forging Subcategory with the following conditions:

Wastewater source: Forging solution heat treatment contact cooling water
Operating time: 24 hours per day, 7 days per week, 52 weeks per year
Wastewater flow: 200 gallons per minute
Treatment alternative: BPT consisting of (1) cyanide oxidation, (2) chromium reduction, (3) skimming, and (4) lime and settle (see Figure IX-4)

Step 1:
Determine the capital and annual costs of the three treatment processes shown above using appropriate equations in Table VIII-1. For example, the capital cost (C) of chromium reduction for a flow (x) of 200 gpm can be calculated as:

$$C = \text{antilog}\,[-0.0248(\log 200)^3 + 0.108(\log 200)^2 + 0.213(\log 200) + 4.10] + 384.8(200)^{0.67}$$
$$= \text{antilog}\,(4.86) + 13{,}390$$
$$= 86{,}000$$

The forging solution heat treatment contact cooling water stream requires 2,000 mg/l lime dosage for precipitation (Table VIII-3); use cost equations for lime and settle corresponding to this dosage. A summary of Step 1 costs is shown below.

	Capital ($)	Annual ($/yr)
Cyanide oxidation	166,000	17,000
Chromium reduction	86,000	10,000
Skimming	55,000	10,000
Lime and settle	221,000	63,000
Subtotal	528,000	100,000

Step 2:
Capital and annual costs are calculated for flow equalization, pumping, and monitoring. By using the appropriate equations in Table VIII-1, the following costs are obtained for flow equalization and pumping. Monitoring costs are constant at a capital cost of $8,000 and an annual cost of $5,000.

	Capital ($)	Annual ($/yr)
Flow equalization	103,000	10,000
Pumping	31,000	14,000
Monitoring	8,000	5,000
Subtotal	142,000	29,000

Step 3:
(a) Determine daily production of oil skimmings (oily sludge) using data in Table VIII-2, required holding tank capacity, and associated disposal costs from Table VIII-1.

Oil Skimmings =

$$\frac{0.07 \text{ gallons skimmings}}{1{,}000 \text{ gallons}} \times \frac{200 \text{ gallons}}{\text{min}} \times \frac{1{,}440 \text{ min}}{\text{day}} = \frac{20 \text{ gallons}}{\text{day}}$$

As discussed previously, holding tanks are sized for two weeks' sludge production, or a minimum of 150 gallons holding tank capacity. Required holding tank capacity is:

$$\frac{20 \text{ gallons}}{\text{day}} \times \frac{7 \text{ days}}{\text{week}} \times 2 \text{ weeks} = 280 \text{ gallons}$$

The capital cost (holding tank) and annual cost (contractor hauling) for the disposal of oily sludge are then calculated as:

	Capital ($)	Annual ($/yr)
Oil skimmings disposal	2,100	2,200

(b) Determine daily production of lime sludge using data in Table VIII-3, then determine whether the sludge should be dewatered by vacuum filtration prior to disposal.

Lime sludge =

$$\frac{6 \text{ gallons sludge}}{1{,}000 \text{ gallons}} \times \frac{200 \text{ gallons}}{\text{min}} \times \frac{1{,}440 \text{ minutes}}{\text{day}} = \frac{1{,}700 \text{ gallons}}{\text{day}}$$

At 365 days per year operation, this quantity corresponds to an annual lime sludge production of 620,000 gallons. Therefore, vacuum filtration and cake hauling is more cost-effective than liquid sludge hauling.

To estimate the required size of vacuum filters and the volume of filter cake, lime sludge from the settling tank and the filter cake are assumed to contain 7 percent and 30 percent solids, respectively, and have a specific gravity of 1.0.

Vacuum filter area required must be determined before the capital cost equation for vacuum filtration in Table VIII-1 can be used. At 7 percent solids, 6 hours of operation per day and a 4 lbs/hour/sq ft loading rate, one square foot of vacuum filter area can dewater 40 gallons of sludge per day. The vacuum filter area requirement for this example is presented below:

$$\frac{1{,}700 \text{ gallons}}{\text{day}} \times \frac{1}{40 \text{ gallons/day/sq ft}} = 43 \text{ sq ft}$$

Daily production of filter cake is

$$\frac{1{,}700 \text{ gallons}}{\text{day}} \times \frac{7\% \text{ solids}}{30\% \text{ solids}} = \frac{400 \text{ gallons}}{\text{day}}$$

Two storage tanks are required for vacuum filtration, one to store the daily clarifier underflow to facilitate a controlled flow into the vacuum filter, and the other to store the dewatered sludge. Therefore, a 1,700-gallon storage tank is required to store daily clarifier underflow. The filter cake storage tank is sized as follows:

$$\frac{400 \text{ gallons}}{\text{day}} \times \frac{7 \text{ days}}{\text{week}} \times 2 \text{ weeks} = 5{,}600 \text{ gallons}$$

Now, using the values of required vacuum filter area (43 sq ft), storage tanks (1,700 gallons for sludge and 5,600 gallons for cake), and daily volume of filter cake (400 gallons per day), the capital and annual costs associated with lime sludge disposal are calculated from Table VIII-1.

	Capital ($)	Annual ($/yr)
Vacuum filtration	112,000	31,000
Sludge storage	6,600	-
Cake storage	15,600	-
Cake contractor hauling	-	43,000
Subtotal	134,200	74,000

Step 4:
Add costs obtained from Steps 1, 2, and 3 to arrive at total capital and annual costs for the BPT alternative for the forging solution heat treatment contact cooling water waste stream:

Step	Capital ($)	Annual ($/yr)
1. Cyanide oxidation, Chromium reduction, Skimming, Lime and settle	528,000	100,000
2. Flow equalization, Pumping, Monitoring	142,000	29,000
3. Oil skimmings disposal	2,100	2,200
Lime sludge disposal	134,200	74,000
Total	806,300	205,200
Amortization (17.7 percent of capital cost)	-	142,700
Depreciation (10.0 percent of capital cost)	-	80,600
Grand Total	806,300	428,500

NONWATER QUALITY ASPECTS OF POLLUTION CONTROL

The elimination or reduction of one form of pollution may aggravate other environmental problems. Therefore, Sections 304(b) and 306 of the Act require EPA to consider the nonwater quality environmental impacts (including energy requirements) of certain regulations. In compliance with these provisions, EPA has considered the effect of this regulation on air pollution, solid waste generation, water scarcity, and energy consumption. This proposal was circulated to and reviewed by EPA personnel responsible for nonwater quality environmental programs. While

it is difficult to balance pollution problems against each other and against energy utilization, EPA is proposing regulations which it believes best serve often competing national goals.

The following are the nonwater quality environmental impacts (including energy requirements) associated with the proposed regulations:

Air Pollution

Imposition of BPT, BAT, NSPS, PSES, and PSNS will not create any substantial air pollution problems.

Imposition of BPT and BAT limitations and NSPS, PSES, and PSNS will not create any substantial air pollution problems. The technologies used as the basis for this regulation precipitate pollutants found in wastewater which are then settled or filtered from the discharged wastewater. These technologies do not emit pollutants into the air.

Solid Waste

EPA estimates that aluminum forming facilities generated 43 million kg (95 million lb) of solid wastes (wet basis) in 1977 as a result of wastewater treatment in place. These wastes were comprised of treatment system sludges containing toxic metals, including chromium, copper, lead, nickel, and zinc and spent lubricants.

EPA estimates that the proposed BPT and PSES will contribute an additional 124 million kg (187 million lb) per year of solid wastes. Proposed BAT will increase these wastes by approximately 2 million (4 million lb) per year. These sludges will necessarily contain additional quantities (and concentrations) of toxic metal pollutants.

The Agency examined the solid wastes that would be generated at aluminum forming plants by the suggeested treatment technologies and believes they are not hazardous under §3001 of the Resource Conservation and Recovery Act. This judgment is made based on the recommended technology of lime precipitation. By the addition of a small excess of lime during treatment, similar sludges, specifically toxic metal bearing sludges, generated by other industries such as the iron and steel industry passed the EP toxicity test. See 40 CFR §261.24 (45 FR 33084 (May 19, 1980)). Thus, the Agency believes that the aluminum forming wastewater sludges will similarly not be found toxic if the recommended technology is applied. Since the aluminum forming solid wastes are not believed to be hazardous, no estimates were made of costs for disposing of hazardous wastes in accordance with RCRA

requirements. The Agency requests comments on its judgment of the wastewater sludges generated by treatment of aluminum forming wastewaters. In addition, the Agency specifically requests cost information if there is reason to believe these sludges would be classified as hazardous.

Although it is the Agency's view that solid wastes generated as a result of these guidelines are not expected to be classified as hazardous under the regulations implementing subtitle C of the Resource Conservation and Recovery Act (RCRA), generators of these wastes must test the waste to determine if the wastes meet any of the characteristics of hazardous waste (see 40 CFR §262.11, 45 FR at 12732-12733 (February 26, 1980)). The Agency may also list these sludges as hazardous pursuant to 40 CFR §261.11 (45 FR at 33121 (May 19, 1980), as amended at 45 FR 76624 (November 19, 1980)).

If these wastes are identified as hazardous, they will come within the scope of RCRA's "cradle to grave" hazardous waste management program, requiring regulation from the point of generation to point of final disposition. EPA's generator standards would require generators of hazardous aluminum forming wastes to meet containerization, labeling, recordkeeping, and reporting requirements; if aluminum formers dispose of hazardous wastes off-site, they would have to prepare a manifest which would track the movement of the wastes from the generator's premises to a permitted off-site treatment, storage, or disposal facility. See 40 CFR §262.20 (45 FR 33142 (May 19, 1980), as amended at 45 FR 86973 (December 31, 1980)). The transporter regulations require transporters of hazardous wastes to comply with the manifest system to assure that the wastes are delivered to a permitted facility. See 40 CFR §263.20 (45 FR 33151 (May 19, 1980), as amended at 45 FR 86973 (December 31, 1980)). Finally, RCRA regulations establish standards for hazardous waste treatment, storage, and disposal facilities allowed to receive such wastes. See 40 CFR Part 464 (46 FR 2802 (January 12, 1981), 47 FR 32274 (July 26, 1982)).

Even if these wastes are not identified as hazardous, they still must be disposed of in compliance with the subtitle D open dumping standards, implementing §4004 of RCRA. See 44 FR 53438 (September 13, 1979). The Agency has calculated as part of the costs for wastewater treatment the cost of hauling and disposing of these wastes, as discussed previously in this section.

Consumptive Water Loss

Treatment and control technologies that require extensive recycling and reuse of water may require cooling mechanisms. Evaporative cooling mechanisms can cause water loss and

contribute to water scarcity problems--a primary concern in arid and semi-arid regions. While this regulation assumes some water reuse the overall amount of reuse is low (below 50 percent) and the quantity of water involved is not significant. The Agency concludes that the consumptive water loss is insignificant and that the pollution reduction benefits of recycle technologies outweigh their impact on consumptive water loss.

Energy Requirements

EPA estimates that the achievement of proposed BPT effluent limitations will result in a net increase in electrical energy consumption of approximately 65 million kilowatt-hours per year. The BAT technology should not substantially increase the energy requirements of BPT because reducing the flow reduces the pumping requirements, the agitation requirement for mixing wastewater, and other volume related energy requirements. Therefore, the proposed BAT limitations are assumed to require an equivalent energy consumption to that of the BPT limitations. To achieve the proposed BPT and BAT effluent limitations, a typical direct discharger will increase total energy consumption by less than 1 percent of the energy consumed for production purposes.

The Agency estimates that proposed PSES will result in a net increase in electrical energy consumption of approximately 50 million kilowatt-hours per year. To achieve proposed PSES, a typical existing indirect discharger will increase energy consumption by less than 1 percent of the total energy consumed for production purposes.

The Agency believes that the only additional energy required for the addition of a filtration step would be for wastewater pumping. It is estimated that NSPS and PSNS would require an additional amount of energy approximately equal to 10 percent greater than the energy requirements for existing sources.

Table VIII-1

COST EQUATIONS FOR RECOMMENDED TREATMENT AND CONTROL TECHNOLOGIES

Unit Process	Equation	Applicability
Skimming (Gravity oil-in-water separation)	C - antilog $[0.0415 (\log x)^3 - 0.00829 (\log x)^2 + 0.051 (\log x) + 4.16]$	$1 < x < 1{,}000$
	A - antilog $[0.00478 (\log x)^3 + 0.0766 (\log x)^2 + 0.0125 (\log x) + 3.52]$	$1 < x < 1{,}000$
Dissolved air flotation	$C = \text{antilog} [0.0369 (\log x)^3 - 0.0461 (\log x)^2 - 0.00537 (\log x) + 4.77] + 1{,}620$	$7 < x < 40$
	$C = \text{antilog} [0.0369 (\log x)^3 - 0.0461 (\log x)^2 - 0.00537 (\log x) + 4.77] + 40.5x$	$40 < x < 1{,}000$
	$A = \text{antilog} [0.0711 (\log x)^3 - 0.329 (\log x)^2 + 0.551 (\log x) + 4.05]$	$7 < x < 1{,}000$
Thermal emulsion breaking	$C = \text{antilog} [-0.0313 (\log x)^3 + 0.1900 (\log x)^2 + 0.8264 (\log x) + 5.159]$	$0.1 < x < 8$
	$A = \text{antilog} [-0.0351 (\log x)^3 + 0.1438 (\log x)^2 + 0.6535 (\log x) + 4.697] - 72 x$ (days/wk) (wk/yr)	$0.1 < x < 8$
Caustic pH adjustment	$C = 33{,}900 x^{0.245} + 3{,}600$	$7 < x < 20$
	$C = 33{,}900 x^{0.245} + 527 x^{0.662}$	$20 < x < 1{,}000$
	$A = \text{antilog} [0.0755 (\log x)^3 - 0.375 (\log x)^2 + 1.20 (\log x) + 3.24]$	$7 < x < 1{,}000$
Acid pH adjustment	$C = \text{antilog} [0.034 (\log x)^3 - 0.167 (\log x)^2 + 0.461 (\log x) + 4.07] + 3{,}645$	$5 < x < 20$
	$C = \text{antilog} [0.034 (\log x)^3 - 0.167 (\log x)^2 + 0.461 (\log x) + 4.07] + 526.5 x^{0.662}$	$20 < x < 1{,}000$
	$A = \text{antilog} [-0.0345 (\log x)^3 + 0.167 (\log x)^2 + 0.194 (\log x) + 3.65]$	$5 < x < 1{,}000$

Table VIII-1 (Continued)

COST EQUATIONS FOR RECOMMENDED TREATMENT AND CONTROL TECHNOLOGIES

Unit Process	Equation	Applicability
Chemical emulsion breaking	$C = \text{antilog}\ [0.0373\ (\log x)^3 - 0.181\ (\log x)^2 + 0.323\ (\log x) + 4.60] + \text{antilog}\ [-0.00854\ (\log x)^3 + 0.125\ (\log x)^2 + 0.0403\ (\log x) + 3.62]$	$7 < x < 1{,}000$
	$A = \text{antilog}\ [0.0272\ (\log x)^3 + 0.0321\ (\log x)^2 + 0.180\ (\log x) + 4.04]$	$7 < x < 1{,}000$
Multimedia filtration	$C = 6{,}800\ x^{0.598} + 1{,}620$	$1 < x < 12$
	$C = 6{,}800\ x^{0.598} + 182\ x^{0.89}$	$12 < x < 1{,}000$
	$A = \text{antilog}\ [-0.0157\ (\log x)^3 + 0.183\ (\log x)^2 - 0.0297\ (\log x) + 3.38]$	$1 < x < 1{,}000$
Lime and settle [L&S] 200 mg/l lime dosage	$C = \text{antilog}\ [0.0033\ (\log x)^3 + 0.0365\ (\log x)^2 + 0.256\ (\log x) + 4.45] + 7{,}290$	$1 < x < 20$
	$C = \text{antilog}\ [0.0033\ (\log x)^3 + 0.0365\ (\log x)^2 + 0.256\ (\log x) + 4.45] + 1{,}012.5\ x^{0.662}$	$20 < x < 1{,}000$
	$A = \text{antilog}\ [0.00402\ (\log x)^3 + 0.0114\ (\log x)^2 + 0.275\ (\log x) + 4.06]$	$1 < x < 1{,}000$
2,000 mg/l lime dosage	$C = \text{antilog}\ [-0.00236\ (\log x)^3 + 0.0645\ (\log x)^2 + 0.281\ (\log x) + 4.49] + 7{,}290$	$1 < x < 20$
	$C = \text{antilog}\ [-0.00236\ (\log x)^3 + 0.0645\ (\log x)^2 + 0.281\ (\log x) + 4.49] + 1{,}012.5\ x^{0.662}$	$20 < x < 1{,}000$
	$A = \text{antilog}\ [0.00720\ (\log x)^3 + 0.0450\ (\log x)^2 + 0.249\ (\log x) + 4.08]$	$1 < x < 1{,}000$
Hexavalent chromium reduction	$C = \text{antilog}\ [-0.0248\ (\log x)^3 + 0.108\ (\log x)^2 + 0.213\ (\log x) + 4.10] + 2{,}835$	$0.2 < x < 20$
	$C = \text{antilog}\ [-0.0248\ (\log x)^3 + 0.108\ (\log x)^2 + 0.213\ (\log x) + 4.10] + 384.8\ x^{0.670}$	$20 < x < 1{,}000$
	$A = \text{antilog}\ [0.132\ (\log x)^3 - 0.447\ (\log x)^2 + 0.795\ (\log x) + 2.95]$	$1 < x < 1{,}000$

Table VIII-1 (Continued)

COST EQUATIONS FOR RECOMMENDED TREATMENT AND CONTROL TECHNOLOGIES

Unit Process	Equation	Applicability
Activated carbon adsorption		
GAC contacting	$C = \text{antilog}\,[-0.0255\,(\log x)^3 + 0.211\,(\log x)^2 - 0.00279\,(\log x) + 4.65] + 2{,}633$	$4 < x < 10$
	$C = \text{antilog}\,[-0.0255\,(\log x)^3 + 0.211\,(\log x)^2 - 0.00279\,(\log x) + 4.65] + 405\,x^{0.808}$	$10 < x < 1{,}000$
	$A = 7{,}000$	$4 < x < 70$
	$A = \text{antilog}\,[-0.00286\,(\log x)^3 + 0.0996\,(\log x)^2 + 0.0834\,(\log x) + 3.37]$	$70 < x < 1{,}000$
GAC replacement throwaway system	$A = 580\,p$	$0.2 < p < 400$
GAC thermal regeneration	$C = \text{antilog}\,[-3.383\,(\log p)^3 + 26.93\,(\log p)^2 - 70.38\,(\log p) + 66.28] + 203.9\,p^{0.567}$	$400 < p < 1{,}000$
	$C = \text{antilog}\,[0.0564\,(\log p)^3 - 0.446\,(\log p)^2 + 1.40\,(\log p) + 4.41] + 203.9\,p^{0.567}$	$1{,}000 < p < 2{,}000$
	$A = 8{,}450\,p^{0.48} + 42.4\,p$	$400 < p < 2{,}000$
Vacuum filtration	$C = \text{antilog}\,[-0.05707\,(\log v)^3 + 0.595\,(\log v)^2 - 1.15\,(\log v) + 5.57] + 4{,}455$	$10 < v < 90$
	$C = \text{antilog}\,[-0.05707\,(\log v)^3 + 0.595\,(\log v)^2 = 1.15\,(\log v) + 5.57] + 141.8\,v^{0.76}$	$90 < v < 1{,}000$
	$A = \text{antilog}\,[0.0203\,(\log v)^3 - 0.0736\,(\log v)^2 + 0.215\,(\log v) + 4.25]$	$10 < v < 1{,}000$

Table VIII-1 (Continued)

COST EQUATIONS FOR RECOMMENDED TREATMENT AND CONTROL TECHNOLOGIES

Unit Process	Equation	Applicability
Recycle	$C = \text{antilog}\,[0.00780\,(\log x)^3 + 0.00444\,(\log x)^2 + 0.0425\,(\log x) + 4.96] + 1{,}013$	$10 < x < 200$
	$C = \text{antilog}\,[0.00780\,(\log x)^3 + 0.00444\,(\log x)^2 + 0.0425\,(\log x) + 4.96] + 56.7\,x^{0.561}$	$200 < x < 1{,}000$
	$C = \text{antilog}\,[-0.118\,(\log x)^3 + 1.58\,(\log x)^2 - 6.04\,(\log x) + 12.43] + 56.7\,x^{0.561}$	$1{,}000 < x < 5{,}000$
	$A = \text{antilog}\,[0.0443\,(\log x)^3 - 0.203\,(\log x)^2 + 0.477\,(\log x) + 3.73]$	$10 < x < 1{,}000$
	$A = \text{antilog}\,[-0.122\,(\log x)^3 + 1.58\,(\log x)^2 - 5.83\,(\log x) + 11.1]$	$1{,}000 < x < 5{,}000$
Holding tank	$C = \text{antilog}\,[0.135\,(\log g)^3 - 1.12\,(\log g)^2 + 3.67\,(\log g) - 1.21] + 25.7\,g^{0.654}$	$150 < g < 20{,}000$
	$C = \text{antilog}\,[0.150\,(\log g)^3 - 2.32\,(\log g)^2 + 12.44\,(\log g) - 17.97] + 25.7\,g^{0.654}$	$20{,}000 < g < 1{,}000{,}000$
Pumping	$C = \text{antilog}\,[-0.0135\,(\log x)^3 + 0.119\,(\log x)^2 + 0.0654\,(\log x) + 3.86] + 1{,}013$	$1 < x < 200$
	$C = \text{antilog}\,[-0.0135\,(\log x)^3 + 0.119\,(\log x)^2 + 0.0654\,(\log x) + 3.86] + 56.7\,x^{0.561}$	$200 < x < 1{,}000$
	$C = \text{antilog}\,[-0.0111\,(\log x)^3 + 0.280\,(\log x)^2 - 0.977\,(\log x) + 5.47] + 56.7\,x^{0.561}$	$1{,}000 < x < 5{,}000$
	$A = \text{antilog}\,[0.00589\,(\log x)^3 + 0.00446\,(\log x)^2 + 0.0528\,(\log x) + 3.94]$	$1 < x < 1{,}000$
	$A = \text{antilog}\,[0.0347\,(\log x)^3 - 0.185\,(\log x)^2 + 0.489\,(\log x) + 3.56]$	$1{,}000 < x < 5{,}000$
Equalization	$C = 8{,}000\,x^{0.483}$	$1 < x < 1{,}000$
	$A = \text{antilog}\,[-0.0118\,(\log x)^3 + 0.15\,(\log x)^2 + 0.00665\,(\log x) + 3.34]$	$1 < x < 1{,}000$

Table VIII-1 (Continued)

COST EQUATIONS FOR RECOMMENDED TREATMENT AND CONTROL TECHNOLOGIES

Unit Process	Equation	Applicability
Cyanide oxidation	$C = \text{antilog}\,[0.00323\,(\log x)^3 + 0.0220\,(\log x)^2 + 0.0672\,(\log x) + 4.61]$	$0.1 < x < 10$
	$C = \text{antilog}\,[-0.131\,(\log x)^3 + 0.964\,(\log x)^2 - 1.69\,(\log x) + 5.60]$	$10 < x < 300$
	$A = \text{antilog}\,[0.0145\,(\log x)^3 + 0.0805\,(\log x)^2 + 0.0363\,(\log x) + 3.54]$	$15 < x < 200$
Contractor hauling	$A = 109\ s$	
Monitoring	$C = 8{,}000$	$1 < x < 2{,}000$
	$A = 5{,}000$	$1 < x < 2{,}000$

C = total capital cost (dollars)
A = annual cost, not including amortization and depreciation (dollars/year)
x = wastewater flow (gallons/minute)
s = sludge production rate (gallons/day)
p = carbon exhaustion rate (1,000 pounds/year)
v = vacuum filter area (sq. ft.)
g = holding tank capacity (gallons)

Table VIII-2

OILY SLUDGE PRODUCTION ASSOCIATED WITH ALUMINUM FORMING

Operation	Oily Sludge Production (gal/1,000 gal)
Direct chill casting	0.2
Continuous casting	0.2
Extrusion	
- contact cooling	0.07
- heat treatment contact cooling	0.08
- dummy block contact cooling	0.14
- die cleaning	--
Hot rolling oil	Site-specific
Etch line	
- acid rinse	--
- deoxidant dip	--
- deoxidant rinse	--
- caustic rinse	--
- water rinse	--
- leveler rinse	--
- scrubber	--
- detergent rinse	--
Forging heat treatment contact cooling	0.07
Forging scrubber	0.32
Drawing oil	Site-specific
Drawing heat treatment contact cooling	
Cold rolling oil	Site-specific
Cold rolling heat treatment contact cooling	--
Foil rolling oil	Site-specific

Table VIII-3

LIME DOSAGE REQUIREMENTS AND LIME SLUDGE PRODUCTION ASSOCIATED WITH ALUMINUM FORMING

Operation	Lime Dosage (mg/l)	Lime Sludge Production (gal/1,000 gal)
Direct chill casting	--	--
Continuous casting	--	--
Extrusion		
- contact cooling	--	--
- heat treatment contact cooling	--	--
- dummy block contact cooling	--	--
- die cleaning	2,000	46
Hot rolling oil	2,000	38
Etch line		
- acid rinse	2,000	63
- deoxidant dip	2,000	63
- deoxidant rinse	2,000	63
- caustic rinse	2,000	63
- water rinse	2,000	63
- leveler rinse	2,000	63
- scrubber	2,000	63
- detergent rinse	2,000	63
Forging heat treatment contact cooling	200	6
Forging scrubber	200	6
Drawing oil	2,000	38
Drawing heat treatment contact cooling	--	--
Cold rolling oil	2,000	38
Cold rolling heat treatment contact cooling	--	--
Foil rolling oil	2,000	38

Table VIII-4

CARBON EXHAUSTION RATES ASSOCIATED WITH ALUMINUM FORMING

Operation	Carbon Exhaustion Rate (lbs carbon/ 1,000 gal)
Direct chill casting	2
Continuous casting	2
Extrusion	
- contact cooling	2
- heat treatment contact cooling	
- dummy block contact cooling	0.5
- die cleaning	--
Hot rolling oil	10
Etch line	
- acid rinse	0.5
- deoxidant dip	0.5
- deoxidant rinse	0.5
- caustic rinse	2
- water rinse	1
- leveler rinse	1
- scrubber	1
- detergent rinse	1
Forging heat treatment contact cooling	--
Forging scrubber	5
Drawing oil	10
Drawing heat treatment contact cooling	0.5
Cold rolling oil	10
Cold rolling heat treatment contact cooling	0.3
Foil rolling oil	10

SECTION IX

BEST PRACTICABLE CONTROL TECHNOLOGY CURRENTLY AVAILABLE

This section defines the effluent characteristics attainable through the application of best practicable control technology currently available (BPT), Section 301(b)(a)(A). BPT reflects the existing performance by plants of various sizes, ages, and manufacturing processes within the aluminum forming category, as well as the established performance of the recommended BPT systems. Particular consideration is given to the treatment already in place at plants within the data base.

The factors considered in identifying BPT include the total cost of applying the technology in relation to the effluent reduction benefits from such application, the age of equipment and facilities involved, the manufacturing processes employed, nonwater quality environmental impacts (including energy requirements), and other factors the Administrator considers appropriate. In general, the BPT level represents the average of the best existing performances of plants of various ages, sizes, processes, or other common characteristics. Where existing performance is uniformly inadequate, BPT may be transferred from a different subcategory or category. Limitations based on transfer of technology are supported by a rationale concluding that the technology is, indeed, transferrable, and a reasonable prediction that it will be capable of achieving the prescribed effluent limits (see Tanner's Council of America v. Train, 540 F.2d 1188 (4th Cir. 1976). BPT focuses on end-of-pipe treatment rather than process changes or internal controls, except where such practices are common industry practice.

TECHNICAL APPROACH TO BPT

The Agency studied the aluminum forming category to identify the manufacturing processes used and wastewaters generated during aluminum forming. Information was collected from industry using data collection portfolios, and wastewaters from specific plants were sampled and analyzed. The Agency used these data to subcategorize the operations and determine what constitutes an appropriate BPT. Some of the key considerations used in subcategorization are listed below:

- The deformation or shaping operation performed on aluminum (rolling, extruding, drawing, and forging) is used as the primary basis for subcategorization.

- Surface cleaning is necessary to remove oil and dirt before, between, and after deformation or shaping operations.

- Surface treatment to remove oxides may be performed in conjunction with cleaning.

- Surface treatment to remove metal or achieve specific surface conditions is sometimes required.

- Heat treatment to achieve desired metallurgical properties may generate wastewater.

- Casting is included here as a regulatory convenience.

Some of the factors which must be considered in establishing effluent limitations based on BPT have already been discussed. The age of equipment and facilities, processes employed, and raw materials were taken into account in subcategorization and are discussed fully in Section IV. Nonwater quality impacts and energy requirements are considered in Section VIII.

The category has been subcategorized, for the purpose of regulation, on the basis of forming operations. On examining each of these forming operations, several additional or subsidiary processes were identified. To organize the principal forming process and subsidiary processes into a workable matrix for the purpose of regulation, the primary forming process and subsidiary operations usually associated with it at plants throughout the industry have been grouped together in what is known as a core. Additional subsidiary processes which may or may not be present at a facility with a given core are called ancillary operations. The basis of regulation at any facility is the set of core operations plus those ancillary operations actually found at the specific facility.

In making technical assessments of data, reviewing manufacturing processes, and assessing wastewater treatment technology options, both indirect and direct dischargers have been considered as a single group. An examination of plants and processes did not indicate any process differences based on the type of discharge, whether it be direct or indirect. Hence, BPT is described in substantial detail for direct discharge subcategories, even though there may be no direct discharge plants in that subcategory.

The Agency usually establishes wastewater limitations in terms of mass rather than concentration. This approach prevents the use of dilution as a treatment method (except for controlling pH). The production normalized wastewater flow (l/kkg) is a link between the production operations and the effluent limitations. The pollutant discharge attributable to each operation can be calculated from the normalized flow and effluent concentration achievable by the treatment technology and summed to derive an appropriate limitation for each subcategory.

Wastewater produced by the deformation operations contains significant concentrations of oil and grease, suspended solids, toxic metals, and aluminum. Surface cleaning produces a rinse water in which significant concentrations of oil and grease, suspended solids, toxic metals, and aluminum are found. The other surface treatment wastewaters have similar characteristics. Wastewater from anodizing and conversion coating, which are considered as cleaning or etching operations, also contains chromium and cyanide. Contact cooling water is associated with some methods of casting and heat treatment and contains significant concentrations of oil and grease, suspended solids, toxic metals, aluminum, and cyanide.

BPT for the aluminum forming category is based upon common treatment of combined streams within each subcategory. Sixty-five percent of the aluminum forming plants with treatment treat combined waste streams in a common treatment system. The BPT treatment is similar throughout the category to the extent that oil and grease, suspended solids, and metals removal are required within each subcategory. The general treatment scheme for BPT is to apply oil skimming technology to remove oil and grease, followed or combined with lime and settle technology to remove metals and solids from the combined wastewaters. Separate preliminary treatment steps for chromium reduction, emulsion breaking, and cyanide removal are utilized when required. The BPT effluent concentrations are based on the performance of chemical precipitation and sedimentation (lime and settle) when applied to a broad range of metal-bearing wastewaters. The basis for lime and settle performance is set forth in substantial detail in Section VII. The BPT treatment train varies somewhat between subcategories to take into account treatment of hexavalent chromium, cyanide, and emulsified oils.

For each of the subcategories, a specific approach was followed for the development of BPT mass limitations. To account for production and flow variability from plant to plant, a unit of production or production normalizing parameter (PNP) was determined for each waste stream which could then be related to the flow from the process to determine a production normalized flow. Selection of the PNP for each process element is discussed in Section IV. Each process within the subcategory was then analyzed to determine (1) whether or not operations included generated wastewater, (2) specific flow rates generated, and (3) the specific production normalized flows for each process. This analysis is discussed in general in Section V and summarized for the core operations in each subcategory and for the ancillary operations.

Normalized flows were analyzed to determine which flow was to be used as part of the basis for BPT mass limitations. The selected flow (sometimes referred to as a BPT regulatory flow or BPT flow)

reflects the water use controls which are common practices within the industry. The BPT normalized flow is based on the average of all applicable data. Plants with normalized flows above the average may have to implement some method of flow reduction to achieve the BPT limitations. In most cases, this will involve improving housekeeping practices, better maintenance to limit water leakage, or reducing excess flow by turning down a flow valve. It is not believed that these modifications would incur any costs for the plants.

The general assumption was made that all wastewaters generated within a subcategory were combined for treatment in a single or common treatment system for that subcategory, even though flow and sometimes pollutant characteristics of process wastewater streams varied within the subcategory. A disadvantage of common treatment is that some loss in pollutant removal effectiveness will result where waste streams containing specific pollutants at treatable levels are combined with other streams in which these same pollutants are absent or present at very low concentrations. Since treatment systems considered under BPT are primarily for metals, oil and grease, and suspended solids removal, and many existing plants usually had one common treatment system in place, a common treatment system for each subcategory is reasonable in terms of cost and effectiveness. Both treatment in place at aluminum forming plants and treatment in other categories having similar wastewaters were evaluated.

The overall effectiveness of end-of-pipe treatment for the removal of wastewater pollutants is improved by the application of water flow controls within the process to limit the volume of wastewater requiring treatment. The controls or in-process technologies recommended under BPT include only those measures which are commonly practiced within the category or subcategory and which reduce flows to meet the production normalized flow for each operation.

For the development of effluent limitations, mass loadings were calculated for each operation within each subcategory. This calculation was made on a process-by-process basis, primarily because plants in this category may perform one or more of the ancillary operations in conjunction with the core operations present. The mass loadings (milligrams of pollutant per metric ton of production unit - mg/kkg) were calculated by multiplying the BPT normalized flow (l/kkg) by the concentration achievable using the BPT treatment system (mg/l) for each pollutant parameter to be regulated under BPT.

Regulated Pollutant Parameters

Pollutant parameters are selected for regulation in the aluminum forming subcategories because of their frequent presence at high concentrations in untreated wastewaters. Total suspended solids, oil and grease, pH, chromium, zinc, aluminum, and cyanide have been selected for regulation in each subcategory.

Total suspended solids, in addition to being present at high levels in raw wastewater from aluminum forming operations, is an important control parameter for metals removal in chemical precipitation and settling treatment systems. The metals are precipitated as insoluble metal hydroxides, and effective solids removal is required in order to ensure reduced levels of toxic metals in the treatment system effluent. Total suspended solids are also regulated as a conventional pollutant to be removed from the wastewater prior to discharge.

Oil and grease is regulated under BPT since a number of aluminum forming operations (i.e., rolling with emulsions, roll grinding, continuous rod casting, and drawing with emulsions) generate emulsified wastewater streams which may be discharged. As seen in Section V, several waste streams have high levels of oil and grease as a conventional pollutant. As will be discussed in detail in Section X, the organic pollutants considered for regulation in Section VI are soluble in the oil and grease fraction and are found associated with the concentrated oily wastes. Data across oil and grease treatment at sampled aluminum forming plants show that effectively removing the oil also removes 97 percent of the toxic organics (see Table X-21, p. 748).

The importance of pH control is documented in Section VII (p. 609), and its importance in metals removal technology cannot be over emphasized. Even small excursions from the optimum pH level can result in less than optimum functioning of the system and inability to achieve specified results. The optimum operating level is usually found to be pH 8.7 to 9.3. To allow a reasonable operating margin above this level and preclude the need for final pH adjustment, the effluent pH is specified to be within the range of 7.5 to 10 rather than the more normal 6.0 to 9.0.

Hexavalent chromium is not regulated specifically since it is included in total chromium. Only the trivalent form is removed by the lime and settle technology. Therefore, the hexavalent form must be reduced in order to meet the limitation on total chromium in each subcategory. Chromium is found at high levels in wastewaters from anodizing and conversion coating operations.

Zinc has been selected for regulation under BPT since it and chromium are the predominant toxic metals present in aluminum forming wastewaters. The Agency believes that when these parameters are controlled with the application of chemical precipitation and sedimentation, control of the other toxic metals is assured.

Aluminum has been selected for regulation under BPT since it is the metal being processed and is found at high levels in all of the contact wastewater streams.

Cyanide was found in two solution heat treatment contact cooling water streams, one associated with a forging operation and the other a rolling operation. Cyanide was also found in one extrusion press heat treatment contact cooling water stream. Industry comments state that cyanide is not used in aluminum forming; however, the source of cyanide could be a corrosion inhibitor used in heat treatment operations. Since such corrosion inhibitors are not unique to these three plants, cyanide is selected for regulation. Cyanide is also found at high levels in conversion coating wastewaters.

The wastewaters generated during coil coating of aluminum are relatively similar to the wastewaters generated in aluminum forming in that both wastewaters contain oil and grease, suspended solids, toxic metals, aluminum, and sometimes cyanide. Concentrations of pollutants may vary somewhat. For instance, toxic metals and aluminum concentrations tend to be slightly higher in coil coating wastewaters; however, in terms of treatability, the characteristics of the wastewaters from aluminum coil coating and aluminum forming are essentially similar, and the same treatment should be equally effective when properly applied to either. Seventeen aluminum forming plants reported that they also do aluminum coil coating. Aluminum coil coating is a subcategory of the coil coating point source category. To simplify compliance with two regulations at these 17 plants, mass limitations have been established for both categories based on the application of the same treatment. Permissible discharge would be calculated by simply adding the masses that may be discharged for each category. In addition, the same pollutants are limited for both aluminum coil coating and aluminum forming, thus making it easier for plants to co-treat wastewaters from these processes.

ROLLING WITH NEAT OILS SUBCATEGORY

Production Operations and Discharge Flows

The primary operation in this subcategory is rolling aluminum in a rolling mill using neat oil as a lubricant. Other subsidiary

production operations in this subcategory include roll grinding, annealing, stationary casting, homogenizing, artificial aging, degreasing, sawing, continuous sheet casting, solution heat treatment, and cleaning or etching. These unit operations were listed in Section IV (p. 139), along with the waste streams generated by these operations and the production normalizing parameters. Table IX-1 lists these production operations, separating them into core and ancillary operations, and identifies the production normalized wastewater flows generated from each. The core allowance for the Rolling with Neat Oils Subcategory without an annealing furnace scrubber is 16.58 l/kkg (3.976 gal/ton). This one allowance represents the sum of the individual allowances for the core waste streams which have a discharge allowance. These streams are roll grinding spent emulsion, sawing spent lubricant and miscellaneous nondescript wastewater sources. The core allowance for the Rolling with Neat Oils Subcategory with an annealing scrubber is 42.93 l/kkg (10.30 gal/ton). This one allowance represents the sum of the individual allowances for the core waste streams listed above plus the wastewater discharge allowance for the annealing scrubber liquor. The following paragraphs discuss these operations and wastewater discharge allowances.

Core Operations

Rolling with Neat Oils. The mineral oil (kerosene) based lubricants used in neat oil rolling are recycled with sediment removal or filtration. After extended use, the rolling oils are periodically disposed of by reclamation or incineration. None of the 50 plants rolling aluminum with neat oils reported any discharge of these oils to surface waters or publicly owned treatment works (POTW). For this reason, the production operation has been assigned a zero wastewater discharge allowance.

Roll Grinding. Seven facilities that perform emulsion roll grinding were contacted; one did not supply enough information to characterize the water use or discharge, and two achieved zero discharge through complete recycle of the roll grinding emulsions. The remaining four plants provided information about their water use or wastewater generation related to roll grinding. One of these four plants does not recycle the wastewater stream at all, resulting in a very large flow. Therefore, the BPT discharge flow for this stream is 8.770 l/kkg (2.103 gal/ton) of aluminum rolled, based on the mean normalized flow of the three plants which do recycle this wastewater.

Annealing. As discussed in Section III (p. 100), the annealing operation does not use process water. The annealing operation has been included in the core of all six subcategories, because it is not specifically associated with any of the major forming

processes (rolling, extruding, forging, drawing); it is a dry operation and it can be found at plants throughout the category. One of the plants surveyed in this study anneals aluminum which is rolled with neat oils and derives the inert gas atmosphere used in its annealing process from furnace off gases. Because of the sulfur content of furnace fuels, the off gases require cleaning with wet scrubbers to remove contaminants. The scrubber used involves a large flow of water with more than 99 percent recycle of the normalized flow and conversely less than 1 percent blowdown. The blowdown at this plant is 26.35 l/kkg (6.320 gal/ton). Since the Agency believes that this scrubber is necessary to the operation of the annealing furnace, an allowance has been included as part of the core of the Rolling with Neat Oils Subcategory. Other plants import cleaned gases or burn natural gas to provide an inert atmosphere. These plants do not need any air pollution control devices, therefore, the Agency has established two core limitations for the Rolling with Neat Oils Subcategory. Because most plants do not have an annealing scrubber liquor flow, separate allowances will be established for core waste streams without an annealing furnace scrubber and for core waste streams with an annealing furnace scrubber.

The annealing scrubber liquor allowance has been included in the core to maintain consistency in the regulation. For the other five subcategories, all annealing operations are performed using no process water and annealing has been assigned a zero pollutant allowance and is included in the core.

Stationary Casting. In stationary casting, molten aluminum is poured into specific shapes for rolling and further processing. It was observed that in 14 plants, this is done without the use of any contact cooling water. The aluminum is allowed to air cool and solidify. Frequently, the stationary molds are internally cooled with noncontact cooling water. In some plants, a small amount of water or mist is applied to the top of the stationary cast aluminum to promote more rapid solidification and allow earlier handling. When properly controlled, this does not result in the discharge of any wastewater. Therefore, stationary casting is included in the core of the Rolling with Neat Oils Subcategory with no wastewater discharge allowance.

Homogenizing. Homogenizing is a type of heat treatment to control physical properties of the aluminum which frequently follows casting. One plant uses a water mist to aid final cooling after homogenizing; however, the water flow is very small and appears to be unnecessary. Since homogenizing is a zero discharge process, it is included in the core of the Rolling with Neat Oils Subcategory with no wastewater discharge allowance.

Artificial Aging. Artificial aging is a type of heat treatment to control physical properties of the aluminum. Because the process is a zero discharge process, it is included in the core of the Rolling with Neat Oils Subcategory with no wastewater discharge allowance.

Degreasing. Thirty-four plants with solvent degreasing operations were surveyed, and only two indicated having process wastewater streams associated with the operation. One facility uses a water rinse after solvent degreasing, while the second discharges solvent recovery sludge to the facility's oil treatment system. Because 32 plants practice solvent degreasing without wastewater discharge, the Agency believes zero discharge of wastewater is an appropriate discharge allowance.

If degreasing spent solvents are combined with any other aluminum forming wastewaters and discharged, then that discharge could be a hazardous waste and may become subject to the requirements of the Resource Conservation and Recovery Act (RCRA) (see 45 FR 33066). Disposal of the combined discharge would be difficult and costly to achieve under the RCRA requirements. Spent degreasing solvents which are used in the aluminum forming category have been listed as hazardous wastes from nonspecific sources (45 FR 33123).

Sawing. Although the sawing operation is assumed to be present at all facilities, only 12 plants provided any information. Some of these plants reported using a neat oil for lubrication, although emulsified lubricants are also used. One plant reported no oils disposal due to evaporation and carryover. Six other plants supplied data which were used to calculate a mean value of 4.807 l/kkg (1.153 gal/ton) of aluminum rolled for the BPT discharge flow for this stream.

Miscellaneous Nondescript Wastewater Sources. Comments submitted by industry on the draft development document contended that the Agency had not considered all of the wastewater sources in the aluminum forming category. Some of these sources, which include ingot scalping, extrusion press leakage, maintenance shop wastewaters, and miscellaneous cleanup wastewaters, were observed during site visits and sampling visits at some facilities and are from low flow or intermittent flow operations. Accordingly, a small allowance of 3.0 l/kkg (0.72 gal/ton) of aluminum processed through the core operations is being established for miscellaneous nondescript wastewater streams. If additional flow and production data are provided by industry, the allowance may be reevaluated.

Ancillary Operations

Continuous Sheet Casting. Contact cooling water as such is not normally used in continuous casting of aluminum sheet; however, lubricants may be required in the associated smoothing roller. Fourteen plants with continuous sheet or strip casting were surveyed; seven reported no lubricants used, two claimed to achieve 100 percent recycle of lubricants without disposal, two indicated periodic disposal of recycle material was necessary, and three provided insufficient data. For the two plants reporting disposal of the lubricant, the mean normalized discharge flow is 1.843 l/kkg (0.442 gal/ton) of aluminum cast; this is the BPT wastewater discharge flow for the stream.

Solution Heat Treatment. Section V contains data taken from dcp's on the wastewater flow from solution and press heat treatment quenching. It has been determined that the amount of water used does not vary significantly between subcategories; therefore, the data are grouped, and the mean normalized flow of 7,705 l/kkg (1,848 gal/ton) of aluminum quenched following solution heat treatment is the BPT discharge flow.

Of the 89 heat treatment quenching processes surveyed, 52 report no recycle of quench water, 25 recycle varying amounts of quench water, and 12 claimed no discharge of this wastewater stream by practicing total recycle. It is possible that the plants reporting no discharge of cooling water inadvertently failed to mention necessary periodic blowdown of the cooling tower to prevent solids accumulation. Since no technology for avoiding the buildup of solids in completely recycled cooling water is known to be applied in this industry, only nonzero wastewater values were used as a data base for selecting the BPT discharge flow. This includes plants that vary from no recycle to 99 percent recycle.

Cleaning or Etching. Cleaning or etching functions are performed in approximately 20 percent of the rolling with neat oils facilities. Wastewaters are or may be produced from three segments of cleaning or etching operations. These are from process baths, which are usually batch dumped; product rinsing; and air pollution control scrubbing. The characteristics of the cleaning or etching processes for aluminum are quite similar in all of the aluminum forming subcategories. Cleaning or etching is performed for the same purpose, irrespective of the subcategory in which it occurs. Additionally, the chemical characteristics of the rinse waters generated by cleaning or etching processes are similar, irrespective of the subcategory in which the operation is conducted. On this basis, it is concluded that the operations are similar, and they may properly be considered as a single operation which occurs as an ancillary operation in all subcategories.

The ancillary operation of cleaning or etching shall include all surface treatment operations, including chemical or electrochemical anodizing and conversion coating when performed as an integral part of the aluminum forming process. A cleaning or etching operation is defined by the cleaning or etching baths. Multiple baths would be considered multiple cleaning or etching operations with a separate limitation for each. Multiple rinses following a single bath will be regulated by a single limitation.

- Process Baths. Of the 34 plants reporting cleaning or etching operations, three indicated that the chemical baths used for cleaning or etching of formed aluminum products are discharged continuously into the wastwater from the rinsing operation; 12 plants indicated that the process baths are discharged periodically in a batch discharge mode; and 14 operate indefinitely without discharge by adding make-up chemicals and water to offset the dragout loss from processing. The remaining five plants supplied no information about discharges from cleaning or etching baths.

  While it is assumed that the majority of plants dispose of the chemical bath by a solid waste contractor or eliminate the bath in other ways, some plants do in fact treat and discharge their process baths. For BPT, it is assumed that the process baths will be periodically discharged to treatment by bleeding them over a long period of time to achieve an equal distribution of flow. Based on data from nine plants, a mean normalized discharge flow of 204.4 l/kkg (49.02 gal/ton) of aluminum etched is the wastewater discharge flow allowed for this stream.

- Product Rinses. A summary of water use, wastewater generation, and number of rinses in product rinses is presented in Table V-51 (p. 324). This shows that some plants discharge very small volumes of wastewater even though their water use is substantial. These data have been restructured in Table IX-2 to show the wastewater generated in l/kkg on an off-mass basis (off-mass is the mass of product processed through a cleaning or etching line multiplied by the number of times that mass is processed through the line.). It should be noted that no plants reported zero discharge of rinse wastewater. For the purpose of establishing BPT limitations, data from 34 plants were averaged on a per-rinse-operation basis. The mean normalized wastewater flow per rinsing operation is 16,860 l/kkg (4,044 gal/ton) of aluminum rinsed, which is the BPT discharge flow for this stream.

Air Pollution Control Scrubbers. Six plants surveyed reported using wet air pollution control devices on cleaning or etching operations. Data were available to calculate normalized wastewater flows from three of the six plants, and the mean wastewater flow is 17,220 l/kkg (4,129 gal/ton) of aluminum cleaned or etched.

Pollutants

The pollutants considered for regulation under BPT are listed in Section VI, along with an explanation of why they have been selected. The pollutants selected for regulation under BPT are chromium (total), cyanide (total), zinc, aluminum, oil and grease, TSS, and pH. The toxic organic pollutants, cadmium, copper, lead, nickel, and selenium, listed in Section VI are not regulated under BPT for the reasons explained in Section X (p. 891).

Table IX-3 lists the pollutants considered for regulation associated with each wastewater stream in the Rolling with Neat Oils Subcategory and the corresponding maximum and minimum concentrations detected for each pollutant.

Treatment Train

The BPT treatment train for the Rolling with Neat Oils Subcategory consists of preliminary treatment when necessary, specifically emulsion breaking and skimming, hexavalent chromium reduction, and cyanide precipitation. The effluent from preliminary treatment is combined with other wastewaters for central treatment by skimming and lime and settle. Sawing spent lubricants, roll grinding spent emulsions, and casting spent lubricants require emulsion breaking and skimming, and may require hexavalent chromium reduction prior to combined treatment by skimming and lime and settle. Solution heat treatment contact cooling water may require cyanide precipitation, while cleaning or etching wastewaters may require chromium reduction in addition to cyanide precipitation. Following the preliminary treatment, these wastewaters are then treated by skimming and lime and settle. This treatment train is presented in Figure IX-1.

Cyanide precipitation is practiced on coil coating wastewaters at six plants, two of which have both aluminum forming and aluminum coil coating operations. Although it is not currently practiced on aluminum forming wastewaters, the technology is applicable to wastewaters where cyanide and metallocyanide complexes are present. These include heat treatment contact cooling water streams and cleaning or etching (conversion coating) wastewater streams which are subject to the aluminum forming regulation.

The process, which is described in detail in Section VII (p. 614), involves the addition of ferrous sulfate heptahydrate and pH adjustment chemicals to the raw wastewater in a rapid mix tank. The resulting sludge is settled in a clarifier or other settling device, and the treated water is routed to downstream processing. Advantages of the cyanide precipitation process over the conventional oxidation route are reported to include better removal of complexed cyanide and significant cost savings.

Technology transfer of cyanide precipitation is justified because existing treatment in the aluminum forming category is uniformly inadequate since no plants are currently treating wastewaters from aluminum forming with any cyanide removal technology. In addition, as discussed previously in this section, the wastewaters generated during coil coating of aluminum are similar to the wastewaters generated in aluminum forming. Data available to the Agency, discussed in Section VII (p. 615) and presented in Table VII-8 (p. 735), indicate that the application of cyanide precipitation technology can achieve the cyanide treatment effectiveness concentration presented in Table VII-21 (p. 748), even over a wide range of cyanide concentration in the raw waste.

Effluent Limitations

Table VII-21 (p. 748), presents the treatment effectiveness corresponding to the BPT treatment train for pollutant parameters considered in the Rolling with Neat Oils Subcategory. Effluent concentrations (one day maximum and ten day average values) are multiplied by the normalized discharge flows summarized in Table IX-1 to calculate the mass of pollutants allowed to be discharged per mass of product. The results of these calculations are shown in Table IX-4.

Benefits

In establishing BPT, EPA must consider the cost of treatment and control in relation to the effluent reduction benefits. BPT costs and benefits are tabulated along with BAT costs and benefits in Section X. As shown in Table X-3 (p. 914), the application of BPT to the total subcategory will remove approximately 1,725,611.3 kg/yr of pollutants. As shown in Table X-1, (p. 912), the corresponding capital and annual costs (first quarter 1978 dollars) for this removal are $8,537,400 and $4,907,700 per year, respectively. As shown in Table X-9 (p. 926), the application of BPT to direct dischargers only, will remove approximately 1,448,032.2 kg/yr of pollutants. As shown in Table X-2 (p. 913), the corresponding capital and annual costs (first quarter 1978 dollars) for this removal are $5,934,200 and $3,460,200 per year, respectively. The Agency believes that these pollutant removals justify the costs incurred by plants in the Rolling with Neat Oils Subcategory.

ROLLING WITH EMULSIONS SUBCATEGORY

Production Operations and Discharge Flows

The primary operation in this subcategory is rolling aluminum in a rolling mill using emulsified oil as a lubricant. Other subsidiary production operations in the subcategory include roll grinding, annealing, stationary casting, homogenizing, artificial aging, degreasing, sawing, direct chill casting, solution heat treatment, and cleaning or etching. These unit operations were tabulated with the waste streams generated and production normalized parameters in Section IV (p. 142). Table IX-5 lists these production operations, separating them into core and ancillary operations, and identifies the production normalized wastewater flows generated from each. The core allowance for the Rolling with Emulsions Subcategory is 91.09 l/kkg (21.85 gal/ton). This one allowance represents the sum of the individual allowances for the core waste streams which have a discharge allowance. These streams are rolling with emulsions spent emulsions, roll grinding spent emulsions, sawing spent lubricant and miscellaneous nondescript wastewater sources. The following paragraphs discuss these operations and wastewater discharge flows.

Core Operations

Rolling with Emulsions. The oil in water emulsion used as a lubricant in many rolling operations is frequently discharged to surface waters or a POTW. All of the 29 plants in this subcategory recycle their emulsions. Five plants report recycle with a continuous bleed, and the remaining plants dump their emulsions periodically.

In selecting the BPT discharge flow appropriate for spent rolling emulsions, a number of variables were analyzed for their effect on the wastewater generated:

- Degree of recycle.
- Method of rolling.
- Degree of reduction.
- Product type.
- Annual production.

The data presented in Table V-4 (p. 203) show the production normalized volume of spent lubricant which is discharged by the plants in the Rolling with Emulsions Subcategory. The median value is extremely small in comparison to the discharge flows from the plants with higher production normalized discharges. Therefore, the BPT discharge flow is based on the normalized mean

of all available data for spent rolling emulsions and is 74.51 l/kkg (17.87 gal/ton).

Recycle rates at plants with a bleed discharge varied from 85 to 99 percent. The remaining plants discharge periodically, implying recycle, but in most cases percent recycle values cannot be assigned. Neither the degree of recycle nor the mode of discharge significantly affected the normalized wastewater flow distributions.

Although most of the cold rolling operations surveyed use neat oil lubricants, a few plants indicated the use of emulsions for cold rolling operations. Analysis of the data showed that cold rolling with emulsions results in discharge values comparable to those associated with hot rolling processes. Normalized discharge flows vary from plant to plant; especially high values were noted at one plant for both their cold rolling and hot rolling operations. The data suggest; however, that cold rolling with emulsions (to either sheet or foil) results in a discharge comparable to that associated with the hot rolling of ingot to plate. Therefore, the Agency is not distinguishing between cold rolling emulsions and hot rolling emulsions to establish the BPT normalized discharge flow.

Roll Grinding. Roll grinding is associated with virtually all rolling operations and is, therefore, included in the core of the Rolling with Emulsions Subcategory. This operation was described previously in the discussion of rolling with neat oils. Roll grinding operations and wastewater discharges are similar throughout the industry; therefore, the same BPT technology and normalized flow is applied to roll grinding in both rolling subcategories.

Annealing. Annealing is a type of heat treatment which is often associated with aluminum forming operations. The basic operation is dry, although water can be used to clean furnace off gases. In the Rolling with Emulsions Subcategory, no annealing operation uses water for scrubbing; therefore, this stream is assigned a zero discharge allowance and is included in the core for regulatory convenience.

Stationary Casting. Stationary casting is designed as a zero discharge operation. The operation is similar throughout the aluminum forming category, and no discharge of process wastewater was ever reported. Therefore, stationary casting is included in the core of the Rolling with Emulsions Subcategory with no wastewater discharge allowance. For a more detailed discussion, refer to the Rolling with Neat Oils Subcategory description.

Treatment Train

The BPT treatment train for the Rolling with Emulsions Subcategory consists of preliminary treatment when necessary, specifically emulsion breaking and skimming, hexavalent chromium reduction, and cyanide precipitation. The effluent from preliminary treatment is combined with other wastewaters for central treatment by skimming and lime and settle. Sawing spent lubricant, roll grinding spent emulsions, and casting spent lubricants require emulsion breaking and skimming, and may require hexavalent chromium reduction prior to combined treatment by skimming and lime and settle. Solution heat treatment contact cooling water may require cyanide precipitation, while cleaning or etching wastewaters may require chromium reduction in addition to cyanide precipitation. Following the preliminary treatment, these wastewaters are then treated by skimming and lime and settle. These treatment technologies are discussed in more detail in the Rolling with Neat Oils Subcategory description. This treatment train is presented in Figure IX-2.

Effluent Limitations

Table VII-21 (p. 748) presents the treatment effectiveness corresponding to the BPT treatment train for pollutant parameters considered in the Rolling with Emulsions Subcategory. Effluent concentrations (one day maximum and ten day average values) are multiplied by the normalized discharge flows summarized in Table IX-5 to calculate the mass of pollutants allowed to be discharged per mass of product. The results of these calculations are shown in Table IX-7.

Benefits

In establishing BPT, EPA must consider the cost of treatment and control in relation to the effluent reduction benefits. BPT costs and benefits are tabulated along with BAT costs and benefits in Section X. As shown in Table X-4 (p. 916), the application of BPT to the total subcategory will remove approximately 12,300,340.3 kg/yr of pollutants. As shown in Table X-1 (p. 912), the corresponding capital and annual costs (first quarter 1978 dollars) for this removal are $9,230,500 and $5,421,000 per year, respectively. As shown in Table X-10 (p. 928), the application of BPT to direct dischargers only, will remove approximately 10,730,699.0 kg/yr of pollutants. As shown in Table X-2 (p. 913), the corresponding capital and annual costs (first quarter 1978 dollars) for this removal are $8,297,900 and $4,908,400 per year, respectively. The Agency believes that these pollutant removals justify the costs incurred by plants in the Rolling with Emulsions Subcategory.

EXTRUSION SUBCATEGORY

Production Operations and Discharge Flows

The primary operation in this subcategory is extrusion, including die cleaning and dummy block cooling operations. Other subsidiary production operations in the subcategory include annealing, stationary casting, homogenizing, artificial aging, degreasing, sawing, direct chill casting, solution and press heat treatment, cleaning or etching, and degassing. These unit operations were tabulated with the waste streams generated and production normalized parameters in Section IV (p. 144). Table IX-8 lists these production operations, separating them into core and ancillary operations, and identifies the production normalized wastewater flows generated from each. The core allowance for the Extrusion Subcategory is 323.7 l/kkg (77.64 gal/ton). This one allowance represents the sum of the individual allowances for the core waste streams which have a discharge allowance. These streams are extrusion die cleaning bath, rinse and scrubber liquor, sawing spent lubricant, and miscellaneous non-descript wastewater sources. The following paragraphs discuss these operations and wastewater discharge flows.

Core Operations

Extrusion Die Cleaning Bath and Rinse. The cleaning of extrusion dies by immersion in caustic solutions is described in Section III (p. 91). Although most of the plants contacted discharge the caustic bath (with or without treatment) to surface waters or a POTW, the solution is hauled from at least four plants by an outside contractor. Ten plants reported discharge rates as shown in Table V-10 (p. 222). One plant reported no discharge of the die cleaning bath, and 27 plants did not report enough data to calculate a normalized discharge flow.

The volume of caustic required will depend on the intricacy of the die orifice, the temperature of extrusion, the lubricant used, and many other factors. Sufficient data are not available to investigate these possibilities. Furthermore, it is likely that the effect of individual plant practices (e.g., dumping prior to saturation) may mask the effect of these factors. Therefore, the mean normalized discharge flow, 14.78 l/kkg (3.546 gal/ton) of aluminum extruded, based on all 10 plants that discharge die cleaning baths, has been chosen as the basis for BPT limitations.

As discussed in Section V (Table V-11, p. 223), the wastewater flows for extrusion die cleaning rinses are available for 10 of the 37 plants known to have die cleaning operations. Of the 10

plants, one reports no discharge of die cleaning rinse water. The normalized mean of the other nine is 25.62 l/kkg (6.145 gal/ton).

Although many factors could influence the amount of water needed for rinsing the dies, it appears that individual plant practices are the most significant factor. Frequently, the dies are simply hosed off, and the quantity of water used is not carefully controlled. It is anticipated that plants discharging volumes greater than the mean will be able to reduce the volume of water discharged by applying tighter controls on the water used to rinse the dies.

The normalized discharge flow for the BPT limitations of the combined bath and rinse streams is the summation of the two means, 14.78 l/kkg and 25.62 l/kkg, which is 40.40 l/kkg (9.690 gal/ton).

Extrusion Die Cleaning Scrubber. A wet scrubber can be used to control caustic fumes from the die cleaning bath. Although only two of the 38 plants with die cleaning baths reported scrubbers, it is believed that most employ wet scrubbers. The two plants supplied enough information to calculate a normalized discharge flow, 275.6 l/kkg (66.08 gal/ton). This value will be used as the BPT wastewater discharge flow.

Two plants reported the use of wet scrubbers at the extrusion presses to remove caustic fumes. These fumes occur as a result of cleaning aluminum from extrusion presses between operations. These extrusion press scrubbers will be considered to be die cleaning scrubbers for the purpose of this regulation and will have the same wastewater discharge allowance.

Dummy Block Cooling. Of the 163 plants that practice extrusion, only three report discharge of a dummy block contact cooling stream. Air cooling of the dummy blocks is used for cooling by the vast majority of extrusion plants. For this reason, dummy block contact cooling has been classified as a zero pollutant allowance stream.

Annealing. Annealing is a type of heat treatment which is often associated with aluminum forming operations. The basic operation is dry, although water can be used to clean furnace off gases. In the Extrusion Subcategory, no annealing operation uses water for scrubbing; therefore, this stream is assigned a zero discharge allowance and is included in the core for regulatory convenience.

Stationary Casting. Stationary casting is associated with most of the aluminum forming subcategories and is designated as a zero discharge operation. The operation is similar throughout the industry and was never found to generate a wastewater stream. Therefore, stationary casting is included in the core of the Extrusion Subcategory with no wastewater discharge allowance. For a more detailed description, refer to the discussion of stationary casting operations associated with the Rolling with Neat Oils Subcategory.

Homogenizing. Homogenizing is a heat treatment process that frequently follows casting. For the reasons discussed previously, it has been assigned a zero discharge allowance and is, therefore, included as a core stream in this subcategory. Homogenization operations are similar throughout the industry. For a more detailed description of the operation, refer to the Rolling with Neat Oils Subcategory discussion.

Artificial Aging. Artificial aging, a common heat treatment, does not generate process wastewater. Therefore, artificial aging is included in the core of the Extrusion Subcategory as a regulatory convenience.

Degreasing. All of the extrusion plants surveyed which reported having degreasing operations indicated that those operations generated no wastewater discharge; therefore, this stream has no wastewater discharge allowance. Degreasing operations are similar in all subcategories of the industry. For a more detailed description of the operation, refer to the Rolling with Neat Oils Subcategory description.

Sawing. Because sawing is associated with extrusion operations, it has been included in the core of the Extrusion Subcategory. On the basis of available data, sawing operations and lubricant discharge practices appear to be similar throughout the aluminum forming category. For a description of the normalized discharge flow associated with sawing, refer to the Rolling with Neat Oils Subcategory description.

Miscellaneous Nondescript Wastewater Sources. An allowance for miscellaneous wastewater sources is included in the core of each subcategory. A description of this allowance and the BPT discharge flow designated for these miscellaneous wastewater sources was presented in the discussion of the Rolling with Neat Oils Subcategory.

Ancillary Operations

Direct Chill Casting. At 44 of the 163 plants surveyed in the Extrusion Subcategory, aluminum is cast by the direct chill

method before extrusion. In addition, rolling with emulsions plants and primary aluminum reduction plants frequently use direct chill casting. See the Rolling with Emulsions Subcategory for a discussion of how the BPT discharge flow was determined.

Solution and Press Heat Treatment. Solution heat treatment is practiced by plants in all of the aluminum forming subcategories. Solution heat treatment involves water quenching of the heated metal and results in substantial water use requirements. Press heat treatment is a water spray operation which cools the metal immediately after extrusion. Water use for all heat treatment contact cooling operations show the similarity in water use requirements among solution and press heat treatment and the various subcategories. Due to this similarity, the water use data were combined and analyzed as a single data set. The solution heat treatment operation and the normalized discharge flow for the associated wastewater stream are described in conjunction with the Rolling with Neat Oils Subcategory.

Cleaning or Etching. Wastewater streams associated with cleaning or etching operations may include chemical baths, rinse water, and air pollution control scrubbers. Refer to the Rolling with Neat Oils section for a description of these wastewater streams and the associated discharge flows.

Degassing. In remelting aluminum prior to casting or continuous casting, it is sometimes necessary to remove significant amounts of magnesium or dissolved gases through the addition of chlorine to the molten metal mass. When this is performed to remove magnesium, it is called demagging and is a common refining practice in the secondary aluminum industry. In the aluminum forming industry, chlorine or inert gases are used to remove dissolved gases in a similar operation called degassing, which does not change the metal content of the melt. Demagging is subject to the secondary aluminum effluent limitations, while degassing is considered part of aluminum forming.

Only one aluminum forming plant employs a wet scrubber for their degassing operation, and no data are available to calculate that discharge flow. Therefore, the BPT discharge flow for degassing scrubber liquor blowdown is based on the mean normalized flow from primary aluminum plants using degassing scrubbers, since degassing processes and scrubber liquor wastewater characteristics are similar for these industries.

Pollutants

The pollutants considered for regulation under BPT are listed in Section VI, along with an explanation of why they have been

selected. The pollutants selected for regulation under BPT are chromium (total), cyanide (total), zinc, aluminum, oil and grease, TSS, and pH. The toxic organic pollutants, cadmium, copper, lead, nickel, and selenium, listed in Section VI are not regulated under BPT for the reasons explained in Section X (p. 891).

Table IX-9 lists the pollutants considered for regulation associated with each wastewater stream in the Extrusion Subcategory and the corresponding maximum and minimum concentrations detected for each pollutant.

Treatment Train

The BPT treatment train for the Extrusion Subcategory consists of preliminary treatment when necessary, specifically emulsion breaking and skimming, hexavalent chromium reduction, and cyanide precipitation. The effluent from preliminary treatment is combined with other wastewaters for central treatment by skimming and lime and settle. Sawing spent lubricants require emulsion breaking and skimming and may require hexavalent chromium reduction prior to combined treatment by skimming and lime and settle. Solution and press heat treatment contact cooling water may require cyanide precipitation, while cleaning or etching and die cleaning wastewaters may require chromium reduction in addition to cyanide precipitation. Following the preliminary treatment, these wastewaters are then treated by skimming and lime and settle. These treatment technologies are discussed in the Rolling with Neat Oils section. This treatment train is presented in Figure IX-3.

Effluent Limitations

Table VII-21 (p. 748) presents the treatment effectiveness corresponding to the BPT treatment train for pollutant parameters considered in the Extrusion Subcategory. Effluent concentrations (one day maximum and ten day average values) are multiplied by the normalized discharge flows summarized in Table IX-8 to calculate the mass of pollutants allowed to be discharged per mass of product. The results of these calculations are shown in Table IX-10.

Benefits

In establishing BPT, EPA must consider the cost of treatment and control in relation to the effluent reduction benefits. BPT costs and benefits are tabulated along with BAT costs and benefits in Section X. As shown in Table X-5 (p. 918), the application of BPT to the total subcategory will remove approximately

4,526,545.1 kg/yr of pollutants. As shown in Table X-1 (p. 912), the corresponding capital and annual costs (first quarter 1978 dollars) for this removal are $22,716,300 and $10,178,400 per year, respectively. As shown in Table X-11 (p. 930), the application of BPT to direct dischargers only, will remove approximately 2,762,974.0 kg/yr of pollutants. As shown in Table X-2 (p. 913), the corresponding capital and annual costs (first quarter 1978 dollars) for this removal are $12,044,300 and $5,280,100 per year, respectively. The Agency believes that these pollutant removals justify the costs incurred by plants in the Extrusion Subcategory.

FORGING SUBCATEGORY

There are no direct discharging facilities which use forging processes to form aluminum. Consequently, the Agency is excluding the Forging Subcategory from this regulation for direct dischargers. The discussion which follows is presented for consistency and completeness. In addition, this discussion forms the basis for pretreatment standards for the Forging Subcategory presented in Section XII.

Production Operations and Discharge Flows

The production operations that may be present at a forging plant include forging, annealing, artificial aging, degreasing, sawing, forging scrubbing, solution heat treatment, and cleaning or etching. These unit operations were tabulated with the waste streams generated and production normalizing parameters in Section IV (p. 147). Table IX-11 lists these production operations, separating them into core and ancillary operations, and identifies the production normalized wastewater flows generated from each. The core allowance for the Forging Subcategory is 7.807 l/kkg (1.873 gal/ ton). This one allowance represents the sum of the individual allowances for the core waste streams which have a discharge allowance. These streams are sawing spent lubricant and miscellaneous non-descript wastewater sources. The following paragraphs discuss these operations and wastewater discharge flows.

Core Operations

Forging. As discussed in Section III (p. 91), the forging process itself does not use any process water; therefore, forging is assigned a zero discharge allowance and is included in the core for regulatory convenience.

Annealing. Annealing is a type of heat treatment which is often associated with all aluminum forming operations. The basic operation is dry, although water can be used to clean furnace off

gases. In the Forging Subcategory, no annealing operation uses water for scrubbing; therefore, this stream is assigned a zero discharge allowance and is included in the core for regulatory convenience.

Artificial Aging. Artificial aging, a common heat treatment, does not generate wastewater. Therefore, artificial aging is included in the core of the Forging Subcategory as a regulatory convenience.

Degreasing. All plants reporting degreasing operations indicated that no wastewater is discharged; therefore, this stream has no wastewater discharge allowance. Degreasing operations are similar in all subcategories of the industry. For a more detailed description of the operation, refer to the Rolling with Neat Oils section.

Sawing. Because sawing can be associated with forging operations, it has been included in the core of the Forging Subcategory. On the basis of available data, sawing operations and lubricant discharge practices appear to be similar throughout the aluminum forming category. For a description of the normalized discharge flow associated with sawing, refer to the previous discussion in the Rolling with Neat Oils section.

Miscellaneous Nondescript Wastewater Sources. An allowance for miscellaneous wastewater sources is included in the core of each subcategory. A description of this allowance and the BPT discharge flow designated for these miscellaneous wastwater sources was presented previously in the discussion of the Rolling with Neat Oils Subcategory.

Ancillary Operations

Forging Scrubbing. Particulates and smoke are generated from the partial combustion of oil-based lubricants used in the forging process. Of the 16 forging plants surveyed, three indicated that wet scrubbers are used to control the emissions associated with this process, and three indicated that dry air pollution control devices are employed. The mean normalized discharge flow from three wet scrubbers, 1,547 l/kkg (371.0 gal/ton), has been selected as the BPT discharge flow for the forging scrubber liquor stream.

Solution Heat Treatment. Solution heat treatment is practiced by plants in all of the aluminum forming subcategories. Solution heat treatment involves water quenching of the hot metal and results in substantial water use requirements. Due to the similarity in water use requirements among the various subcategories,

the water use data were combined and analyzed as a single data set. The solution heat treatment operation and the BPT normalized discharge flow for the associated wastewater stream are described in conjunction with the Rolling with Neat Oils Subcategory.

Cleaning or Etching. Wastewater streams associated with cleaning or etching operations may include chemical baths, rinse water, and air pollution control scrubbers. Refer to the Rolling with Neat Oils section for a description of these wastewater streams and the associated BPT discharge flows.

Pollutants

The pollutants considered for regulation under BPT are listed in Section VI, along with an explanation of why they have been selected. The pollutants selected for regulation under BPT are chromium (total), cyanide (total), zinc, aluminum, oil and grease, TSS, and pH. The toxic organic pollutants, cadmium, copper, lead, nickel, and selenium, listed in Section VI are not regulated under BPT for the reasons explained in Section X (p. 891).

Table IX-12 lists the pollutants considered for regulation associated with each wastewater stream in the Forging Subcategory and the corresponding maximum and minimum concentrations detected for each pollutant.

Treatment Train

The BPT treatment train for the Forging Subcategory consists of preliminary treatment when necessary, specifically emulsion breaking and skimming, hexavalent chromium reduction, and cyanide precipitation. The effluent from preliminary treatment is combined with other wastewaters for central treatment by skimming and lime and settle. Sawing spent lubricants require emulsion breaking and skimming and may require hexavalent chromium reduction prior to combined treatment by skimming and lime and settle. Solution heat treatment contact cooling water may require cyanide precipitation, while cleaning or etching and forging scrubber wastewaters may require chromium reduction in addition to cyanide precipitation. Following the preliminary treatment, these wastewaters are then treated by skimming and lime and settle. These treatment processes are discussed in the Rolling with Neat Oils Subcategory description. The treatment train is presented in Figure IX-4.

Effluent Limitations

Table VII-21 (p. 748) presents the treatment effectiveness of BPT treatment train for pollutant parameters considered in the Forging Subcategory. Effluent concentrations (one day maximum and ten day average values) are multiplied by the normalized discharge flows summarized in Table IX-11 to calculate the mass of pollutants allowed to be discharged per mass of product. The results of these calculations are shown in Table IX-13.

Benefits

In establishing BPT, EPA must consider the cost of treatment and control in relation to the effluent reduction benefits. BPT costs and benefits are tabulated along with BAT costs and benefits in Section X. As shown in Table X-6 (p. 920), the application of BPT to the total subcategory will remove approximately 767,120.6 kg/yr of pollutants. As shown in Table X-1 (p. 912), the corresponding capital and annual costs (first quarter 1978 dollars) for this removal are $3,420,000 and $1,677,400 per year, respectively. The Agency believes that this pollutant removal justifies the costs incurred by plants in the Forging Subcategory.

DRAWING WITH NEAT OILS SUBCATEGORY

Production Operations and Discharge Flows

The primary operation in this subcategory is drawing aluminum using neat oil as a lubricant. Other subsidiary production operations in this subcategory include annealing, stationary casting, homogenizing, artificial aging, degreasing, sawing, swaging, continuous rod casting, solution heat treatment, and cleaning or etching. These unit operations were tabulated with the waste streams generated and production normalizing parameters in Section IV (p. 149). Table IX-14 lists these production operations, separating them into core and ancillary operations, and identifies the production normalized wastewater flows generated from each. The core allowance for the Drawing with Neat Oils Subcategory is 7.807 l/kkg (1.873 gal/ton). This one allowance represents the sum of the individual allowances for the core waste streams which have a discharge allowance. These streams are sawing spent lubricants and miscellaneous nondescript wastewater sources. The following paragraphs discuss these operations and wastewater discharge flows.

Core Operations

Drawing with Neat Oils. Of the 64 plants using neat oils as drawing lubricants, none were found to discharge this oil either directly or indirectly. The most common practice appears to be

filtration and recycle. Frequently, carryover is the only method of disposal, but in other cases the oil is periodically disposed of either to a contractor or an incinerator. A number of telephone contacts with industry and trade associations confirmed this information. Because no plants are known to be discharging drawing neat oils to receiving waters or a POTW, the stream has been assigned a zero discharge allowance.

Annealing. Annealing is a type of heat treatment which is often associated with aluminum forming operations. The basic operation is dry, although water can be used to clean furnace off gases. In the Drawing with Neat Oils Subcategory, no annealing operation uses water for scrubbing; therefore, this stream is assigned a zero discharge allowance and is included in the core for regulatory convenience.

Stationary Casting. Stationary casting is associated with most of the aluminum forming subcategories and is designed as a zero discharge process. The operation is similar throughout the industry and was never found to generate a wastewater stream. Therefore, stationary casting is included in the core of the Drawing with Neat Oils Subcategory with no wastewater discharge allowance. For a more detailed description, refer to the discussion of stationary casting operations associated with the Rolling with Neat Oils Subcategory.

Homogenizing. Homogenizing is a heat treatment process that frequently follows casting. For the reasons discussed previously, it has been assigned a zero discharge allowance and is, therefore, included as a core stream in this subcategory. Homogenization operations are similar throughout the industry. For a more detailed description of the operation, refer to the Rolling with Neat Oils Subcategory discussion.

Artificial Aging. Artificial aging, a common heat treatment, does not generate wastewater. Therefore, artificial aging is included in the core of the Drawing with Neat Oils Subcategory as a regulatory convenience.

Degreasing. All plants in this subcategory reporting degreasing operations indicated that no wastewater is discharged; therefore, this stream has no wastewater discharge allowance. Degreasing operations are similar in all subcategories of the industry. For a more detailed description of the operation, refer to the Rolling with Neat Oils section.

Sawing. Because sawing is typically associated with drawing operations, it has been included in the core of the Drawing with Neat Oils Subcategory. On the basis of available data, sawing operations and lubricant discharge practices appear to be similar throughout the aluminum forming category. For a description of the normalized discharge flow associated with sawing, refer to the previous discussion in the Rolling with Neat Oils section.

Swaging. Swaging operations point the end of tube or wire to prepare it for drawing. Although swaging may require lubricants, no plant was found to discharge wastewater from this operation. Therefore, zero discharge of wastewater is considered appropriate.

Miscellaneous Nondescript Wastewater Sources. An allowance for miscellaneous wastewater sources is included in the core of each subcategory. A description of this allowance and the BPT discharge flow designated for these miscellaneous wastewater sources was presented previously in the discussion of the Rolling with Neat Oils Subcategory.

Ancillary Operations

Continuous Rod Casting Cooling. A method of casting rod in preparation for drawing is continuous casting. A stream of water is circulated through the casting wheel to cool the molten aluminum as it is cast. This water is in theory noncontact cooling water; however, many of the plant personnel contacted have indicated that it is impossible to prevent the water from coming into contact with the product. Only one of the aluminum forming plants surveyed supplied sufficient information to calculate a production normalized flow. The BPT normalized flow, 1,042 l/kkg (249.9 gal/ton) of aluminum cast is based on these data.

Data obtained from dcp's for primary aluminum plants were subsequently considered. Two plants provided sufficient information to calculate a discharge flow. One plant reported a production normalized discharge flow of 415 l/kkg and the other 11.3 l/kkg. Both of the primary aluminum plants employ a high degree of recycle (>99 percent). The former plant uses approximately the same amount of water as the single aluminum forming plant. The latter plant uses approximately 40 times as much water as the other two plants. There is no apparent reason to believe that the casting operations at these three plants are different and that they would require significantly differing amounts of water. As such, the Agency believes that the primary aluminum data support the selection of the BPT normalized flow based on the aluminum forming data.

Continuous Rod Casting Lubricant. An emulsion is used as a lubricant for rolling of aluminum rod, part of the rod casting process, and not to be confused with the Rolling with Emulsions Subcategory. Of the three plants with continuous rod casting operations, one reported 100 percent recycle of their lubricants without discharge, and two plants periodically dispose of this waste stream with contractor hauling. Neither of these two plants reported sufficient information to calculate a discharge

flow. The Agency has transferred the normalized discharge flow for continuous sheet casting lubricant, 1.843 l/kkg (0.442 gal/ton) of aluminum cast to apply to continous rod casting. The Agency believes these processes are similar and the amount of lubricant required per pound of sheet that is cast ought to be the same as the lubricant used per pound of rod produced.

Solution Heat Treatment. Solution heat treatment is practiced by plants in all of the aluminum forming subcategories. Solution heat treating involves water quenching of the heated metal and results in substantial water use requirements. Due to the similarity in water use requirements among the various subcategories, the water use data were combined and analyzed as a single data set. The solution heat treatment operation and the BPT normalized data flow for the associated wastewater stream are described in conjunction with the Rolling with Neat Oils Subcategory.

Cleaning or Etching. Wastewater streams associated with cleaning or etching operations may include chemical baths, rinse water, and air pollution control scrubbers. Refer to the Rolling with Neat Oils section for a description of these wastewater streams and the associated BPT discharge flows.

Pollutants

The pollutants considered for regulation under BPT are listed in Section VI, along with an explanation of why they have been selected. The pollutants selected for regulation under BPT are chromium (total), cyanide (total), zinc, aluminum, oil and grease, TSS, and pH. The toxic organic pollutants, cadmium, copper, lead, nickel, and selenium, listed in Section VI are not regulated under BPT for the reasons explained in Section X (p. 891).

Table IX-15 lists the pollutants considered for regulation associated with each wastewater stream in the Drawing with Neat Oils Subcategory and the corresponding maximum and minimum concentrations detected for each pollutant.

Treatment Train

The BPT treatment train for the Drawing with Neat Oils Subcategory consists of preliminary treatment when necessary, specifically emulsion breaking and skimming, hexavalent chromium reduction, and cyanide precipitation. The effluent from preliminary treatment is combined with other wastewaters for central treatment by skimming and lime and settle. Sawing spent lubricants require emulsion breaking and skimming and may require hexavalent chromium reduction prior to combined treatment by

skimming and lime and settle. Solution heat treatment contact cooling water may require cyanide precipitation, while cleaning or etching wastewaters may require chromium reduction in addition to cyanide precipitation. Following the preliminary treatment, these wastewaters are then treated by skimming and lime and settle. These treatment processes are discussed in more detail in the Rolling with Neat Oils Subcategory description. The treatment train is presented in Figure IX-5.

Effluent Limitations

Table VII-21 (p.748) presents the treatment effectiveness of the BPT treatment train for pollutant parameters considered in the Drawing with Neat Oils Subcategory. Effluent concentrations (one day maximum and ten day average values) are multiplied by the normalized discharge flows summarized in Table IX-14 to calculate the mass of pollutants allowed to be discharged per mass of product. The results of these calculations are shown in Table IX-16.

Benefits

In establishing BPT, EPA must consider the cost of treatment and control in relation to the effluent reduction benefits. BPT costs and benefits are tabulated along with BAT costs and benefits in Section X. As shown in Table X-7 (p. 922), the application of BPT to the total subcategory will remove approximately 756,582.6 kg/yr of pollutants. As shown in Table X-1 (p. 912), the corresponding capital and annual costs (first quarter 1978 dollars) for this removal are $2,691,000 and $1,280,400 per year, respectively. As shown in Table X-12 (p. 932), the application of BPT to direct dischargers only, will remove approximately 536,194.5 kg/yr of pollutants. As shown in Table X-2 (p. 913), the corresponding capital and annual costs (first quarter 1978 dollars) for this removal are $1,707,300 and $778,700 per year, respectively. The Agency believes that these pollutant removals justify the costs incurred by plants in the Drawing with Neat Oils Subcategory.

DRAWING WITH EMULSIONS OR SOAPS SUBCATEGORY

Production Operations and Discharge Flows

The primary operation in this subcategory is drawing aluminum using emulsified oil or soap as a lubricant. Other subsidiary production operations in this subcategory include annealing, stationary casting, homogenizing, artificial aging, degreasing, sawing, continuous rod casting, solution heat treatment, and cleaning or etching. These unit operations were tabulated with the waste streams generated and production normalizing parameters in Section IV (p. 151). Table IX-17 lists these production

operations, separating them into core and ancillary operations, and identifies the production normalized wastewater flows generated from each. The core allowance for the Drawing with Emulsions or Soaps Subcategory is 424.3 l/kkg (101.8 gal/ton). This one allowance represents the sum of the individual allowances for the core waste streams which have a discharge allowance. These streams are drawing with emulsions or soaps spent lubricants, sawing spent lubricants and miscellaneous non-descript wastewater sources. The following paragraphs discuss these operations and wastewater discharge flows.

Core Operations

Drawing with Emulsions or Soaps. Of the 13 plants which use emulsions or soap solutions for drawing, eight provided enough data to calculate normalized discharge flows. Table IX-18 shows the wide range of values. The following factors were considered in an attempt to account for this variation: surface area of the product and type of lubricant.

Analysis of the data has shown that variation in water use is related to differences in the dimension of wire being drawn. The amount of lubricant required for drawing a given length of wire is roughly the same for fine and coarse wire. Since the weight of finer wire is less, the corresponding production figures will be lower. As a result, the wastewater factors calculated as flow per unit production will be higher for lubricants used in fine wire drawing than in drawing of coarse wire.

Comparison of Table V-24 (p. 250) and Table IX-18 shows that plant 8 does not recycle its soap solutions, while plant 6 does recycle soap solutions. This partially explains the extremely large wastewater flow of plant 8 and is the reason for eliminating plant 8's flow from the mean flow calculation. A comparison of wastewater from plant 6 using soap as a lubricant and wastewater from other plants using emulsions shows that the type of lubricant does not seem to influence the lubricant normalized discharge flow.

The mean normalized discharge flow of the six plants that recycle and discharge drawing emulsions has been chosen as the basis of BPT, 416.5 l/kkg (99.89 gal/ton) of aluminum drawn.

Annealing. Annealing is a type of heat treatment which is often associated with all aluminum forming operations. The basic operation is dry, although water can be used to clean furnace off gases. In the Drawing with Emulsions or Soaps Subcategory, no annealing operation uses water for scrubbing; therefore, this stream is assigned a zero discharge allowance and is included as a core stream for regulatory convenience.

Stationary Casting. Stationary casting is associated with most of the aluminum forming subcategories and is designed as a zero discharge operation. The operation is similar throughout the industry and was never found to generate a wastewater stream. Stationary casting is, therefore, included in the core of the Drawing with Emulsions or Soaps Subcategory with no wastewater discharge allowance. For a further description, refer to the discussion of stationary casting operations associated with the Rolling with Neat Oils Subcategory.

Homogenizing. Homogenizing is a heat treatment process that frequently follows casting. For the reasons discussed previously, it has been assigned a zero discharge allowance and is, therefore, included as a core stream in this subcategory. Homogenization operations are similar throughout the industry. For a more detailed description of the operation, refer to the Rolling with Neat Oils Subcategory discussion.

Artificial Aging. Artificial aging, a common heat treatment, does not generate wastewater. Therefore, artificial aging is included in the core of the Drawing with Emulsions or Soaps Subcategory as a regulatory convenience.

Degreasing. All plants surveyed in this subcategory reporting degreasing operations indicated that no wastewater is discharged; therefore, this stream has no wastewater discharge allowance. Degreasing operations are similar in all subcategories of the industry. For a more detailed description of the operation, refer to the Rolling with Neat Oils section.

Sawing. Because sawing is typically associated with drawing operations, it has been included in the core of the Drawing with Emulsions or Soaps Subcategory. On the basis of available data, sawing operations and lubricant discharge practices appear to be similar throughout the aluminum forming category. For a description of the normalized discharge flow associated with sawing, refer to the previous discussion under Rolling with Neat Oils.

Swaging. Swaging operations point the end of tube or wire to prepare it for drawing. Although swaging may require lubricants, no plant was found to discharge wastewater from this operation. Therefore, zero discharge of wastewater is considered appropriate.

Miscellaneous Nondescript Wastewater Sources. An allowance for miscellaneous wastewater sources is included in the core of each subcategory. A description of this allowance and the BPT discharge flow designated for these miscellaneous wastwater sources

was presented in the discussion of the Rolling with Neat Oils Subcategory.

Ancillary Operations

Continuous Rod Casting Cooling. Rod casting forms the metal in preparation for rolling or drawing. In the process, cooling water is circulated through the casting wheel and often contacts the molten metal. As discussed in the Drawing with Neat Oils section, only one plant supplied sufficient information to calculate a normalized flow which is designated the BPT discharge flow of 1,042 l/kkg (249.9 gal/ton) of aluminum cast.

Continuous Rod Casting Lubricant. Part of the rod casting process involves rolling the cast aluminum with an emulsion as a lubricant. Of the three plants with continuous rod casting operations, one reported 100 percent recycle of lubricants, and two plants periodically dispose of this waste stream with contractor hauling. As discussed in the Drawing with Neat Oils section, it is assumed that the discharge flow is equal to that of continuous sheet casting lubricant, 1.843 l/kkg (0.442 gal/ton) of aluminum cast.

Solution Heat Treatment. Solution heat treatment is practiced by plants in all of the aluminum forming subcategories. Solution heat treating involves water quenching of the heated metal and results in substantial water use requirements. Due to the similarity in water use requirements among the various subcategories, the water use data were combined and analyzed as a single data set. The solution heat treatment operation and the BPT normalized data flow for the associated wastewater stream are described in conjunction with the Rolling with Neat Oils Subcategory.

Cleaning or Etching. Wastewater streams associated with cleaning or etching operations may include chemical baths, rinse water, and air pollution control scrubbers. Refer to the Rolling with Neat Oils section for a description of these wastewater streams and the associated BPT discharge flows.

Pollutants

The pollutants considered for regulation under BPT are listed in Section VI, along with an explanation of why they have been selected. The pollutants selected for regulation under BPT are chromium (total), cyanide (total), zinc, aluminum, oil and grease, TSS, and pH. The toxic organic pollutants, cadmium, copper, lead, nickel, and selenium, listed in Section VI are not regulated under BPT for the reasons explained in Section X (p. 891).

Table IX-19 lists the pollutants considered for regulation associated with each wastewater stream in the Drawing with Emulsions or Soaps Subcategory and the corresponding maximum and minimum concentrations detected for each pollutant.

Treatment Train

The BPT treatment train for the Drawing with Emulsions or Soaps Subcategory consists of preliminary treatment when necessary, specifically emulsion breaking and skimming, hexavalent chromium reduction, and cyanide precipitation. The effluent from preliminary treatment is combined with other wastewaters for central treatment by skimming and lime and settle. Sawing spent lubricants require emulsion breaking and skimming and may require hexavalent chromium reduction prior to combined treatment by skimming and lime and settle. Solution heat treatment contact cooling water may require cyanide precipitation, while cleaning or etching wastewaters may require chromium reduction in addition to cyanide precipitation. Following the preliminary treatment, these wastewaters are then treated by skimming and lime and settle. Descriptions of these wastewater treatments can be found in the Rolling with Neat Oils Subcategory description. The treatment train is presented in Figure IX-6.

Effluent Limitations

Table VII-21 (p. 748) presents the treatment effectiveness of the BPT treatment train for pollutant parameters considered in the Drawing with Emulsions Subcategory. Effluent concentrations (one day maximum and ten day average values) are multiplied by the normalized discharge flows summarized in Table IX-17 to calculate the mass of pollutants allowed to be discharged per mass of product. The results of these calculations are shown in Table IX-20.

Benefits

In establishing BPT, EPA must consider the cost of treatment and control in relation to the effluent reduction benefits. BPT costs and benefits are tabulated along with BAT costs and benefits in Section X. As shown in Table X-8 (p. 924), the application of BPT to the total subcategory will remove approximately 134,342.9 kg/yr of pollutants. As shown in Table X-1 (p. 912), the corresponding capital and annual costs (first quarter 1978 dollars) for this removal are $637,400 and $306,400 per year, respectively. As shown in Table X-13 (p. 934), the application of BPT to direct dischargers only, will remove approximately 53,036.9 kg/yr of pollutants. As shown in Table X-2 (p. 913), the corresponding capital and annual costs (first

quarter 1978 dollars) for this removal are $305,200 and $133,900 per year, respectively. The Agency believes that these pollutant removals justify the costs incurred by plants in the Drawing with Emulsions or Soaps Subcategory.

APPLICATION OF REGULATIONS IN PERMITS

The purpose of these limitations (and standards) is to form a uniform material basis for regulating wastewater effluent from the aluminum forming category. For direct dischargers, this is accomplished through NPDES permits. Since the aluminum forming category is regulated on an individual waste stream "building-block" approach, two examples of applying these limitations to determine the allowable discharge from aluminum forming facilities are included.

Example 1

Plant X forms aluminum using an extrusion process and operates 250 days per year. The total plant production is 50,000 off-kkg/yr. All of the aluminum is degassed and cast by the direct chill method; 70 percent of the aluminum is solution heat treated; and 50 percent of the aluminum is etched with caustic. The plant has a degassing scrubber, and the etch line consists of a single bath followed by a two-stage rinse. Table IX-21 illustrates the calculation of the allowable BPT discharge of TSS.

The daily production from the extrusion operation would equal 50,000 kkg/yr divided by 250 days/yr to get 200 kkg/day. This production rate is then multiplied by the extrusion core limitation (mg/kkg) to get the daily discharge limit for the core at Plant X. Two hundred kkg/day is also used to multiply with the limitation of direct chill casting, since 100 percent of the direct chill casting product is extruded. To determine the mass of aluminum that is processed through solution heat treatment the mass of aluminum extruded (200 kkg/day) is multiplied by 70 percent to achieve a production rate of 140 kkg/day. The same procedure is followed for the cleaning or etching operation and the sum of the daily limits for the individual operations becomes the plant limit.

Example 2

Plant Y, which operates 300 days per year, forms 10,000 off-kkg/yr of aluminum sheet by rolling with emulsions and also forms 2,000 off-kkg/yr of aluminum by drawing with emulsions. All of the rolled aluminum is cast by the direct chill method; all of the drawn aluminum is cast by the continuous rod casting method; 70 percent of the rolled aluminum is solution heat treated; 30 percent of the rolled aluminum is etched with caustic; and 5 percent of the drawn aluminum is etched with caustic. The etch

line consists of a caustic bath followed by a single-stage rinse followed by a detergent bath followed by a second single-stage rinse. Table IX-22 illustrates the calculation of the allowable BPT discharge of zinc.

The first step in determining the daily limits for Plant Y is to put the production in terms of kkg/day. The plant produces 10,000 off-kkg/yr of aluminum sheet, all of which is cast on-site by direct chill casting. Thus, the daily production for direct chill casting is 10,000 kkg/yr divided by 300 days/yr or 33.3 kkg/day. Following the casting operation the aluminum ingot is heated then processed through the rolling mill to produce plate and removed to cool. The aluminum plate is then returned to the rolling mill and processed once more to produce sheet, thus the same off mass of aluminum undergoes two process cycles. The production parameter used to obtain the daily limit from the rolling process is two times the production of the direct chill casting process or 66.6 kkg/day. The production and daily limits are shown on Table IX-22 for all of the operations performed at Plant Y.

Table IX-1

PRODUCTION OPERATIONS - ROLLING WITH NEAT OILS SUBCATEGORY

Operation	Waste Stream	Normalized BPT Discharge 1/kkg	(gpt)	Production Normalizing Parameter
Core				
Rolling with neat oils	Spent lubricant	0	(0)	
Roll grinding	Spent emulsion	8.770	(2.103)	Mass of aluminum rolled with neat oil
Stationary casting	None	0	(0)	
Homogenizing	None	0	(0)	
Artificial aging	None	0	(0)	
Degreasing	Spent solvents	0	(0)	
Sawing	Spent lubricant	4.807	(1.153)	Mass of aluminum rolled with neat oil
Miscellaneous nondescript wastewater sources	Various	3	(0.720)	Mass of aluminum rolled with neat oil
	Total core without an annealing furnace scrubber	16.58	(3.976)	
Annealing	Atmosphere scrubber liquor	26.35	(6.320)	Mass of aluminum rolled with neat oil
	Total core with an annealing furnace scrubber	42.93	(10.30)	

Table IX-1 (Continued)

PRODUCTION OPERATIONS - ROLLING WITH NEAT OILS SUBCATEGORY

Operation	Waste Stream	Normalized BPT Discharge 1/kkg	(gpt)	Production Normalizing Parameter
Ancillary				
Continuous sheet casting	Spent lubricant	1.843	(0.442)	Mass of aluminum cast by continuous methods
Solution heat treatment	Contact cooling water	7,705	(1,848)	Mass of aluminum quenched
Cleaning or etching	Bath	204.4	(49.02)	Mass of aluminum cleaned or etched
	Rinse	16,860	(4,044)	Mass of aluminum cleaned or etched
	Scrubber liquor	17,220	(4,130)	Mass of aluminum cleaned or etched

Table IX-2

COMPARISON OF WASTEWATER DISCHARGE RATES FROM CLEANING OR ETCHING RINSE STREAMS

Plant	Bath Stages	Wastewater Per Stage l/kkg	Wastewater Per Stage gal/ton	Cleaning or Etching Baths: Acid	Caustic	Detergent	Other	Associated Product: Coil	Extrusion	Forging	Drawn	Other
1	1	1.430	0.3430		X	X		X				
2	1	2.635	0.6320				X				X	
3	1	14.48	3.472	X				X				
4	1	61.00	14.63		X	X			X			
5	1	80.05	19.20	X	X				X	X	X	
6	1	102.1	24.49	X		X					X	
7	1	178.0	42.70				X	X				
8	1	333.6	80.00	X					X			
9	1	500.3	120.0	X	X					X		
10	2	500.3	120.0	X	X							X
11	1	558.3	133.3		X							X
12	1	600.0	143.9	X				X				
13	1	938.1	225.0		X	X		X				
14	2	1,163	279.0	X	X						X	
15	2	1,313	315.0	X	X				X		X	
16	2	1,591	381.6	X	X						X	
17	4	1,780	427.0	X	X					X		
18	3	2,110	506.0	X	X					X		
19	1	2,330	558.8	X				X				
20	1	5,003	1,200		X					X		
21	2	5,212	1,250	X	X					X		
22	2	5,683	1,363	X	X					X		
23	2	10,670	2,560	X	X					X		
24	1	14,480	3,473				X	X				
25	2	16,120	3,865	X	X					X		
26	3	20,850	5,000	X	X		X			X		
27	1	23,350	5,600		X			X				
28	4	23,520	5,640	X	X	X	X		X			
29	3	36,390	8,727				X			X		
30	1	43,950	10,540	X					X			
31	1	63,920	15,330		X				X			
32	2	75,430	18,090	X	X					X		
33	1	89,350	21,430		X					X		
34	2	125,100	30,000	X	X	X				X		

Note: This table includes data from four plants which have both cleaning and etch line rinse dischargers.

Table IX-3

CONCENTRATION RANGE OF POLLUTANTS CONSIDERED FOR BPT REGULATION IN CORE AND ANCILLARY WASTE STREAMS - ROLLING WITH NEAT OILS SUBCATEGORY

Waste Stream	Cadmium (mg/l)	Total Chromium (mg/l)	Copper (mg/l)	Total Cyanide (mg/l)	Lead (mg/l)	Nickel (mg/l)
Roll Grinding Spent Emulsions[A]	<0.0002 - 0.180	<0.001 - 1	ND - 7.40	0.016 - 2.5	<0.002 - 56.90	<0.001 - 0.214
Sawing Spent Lubricants[A]	<0.0002 - 0.180	<0.001 - 1	ND - 7.40	0.016 - 2.5	<0.002 - 56.90	<0.001 - 0.214
Annealing Atmosphere Scrubber Liquor	---	0.016	0.021	---	0.016	---
Continuous Sheet Casting Spent Lubricants[A]	<0.0002 - 0.180	<0.001 - 1	ND - 7.40	0.016 - 2.5	<0.002 - 56.90	<0.001 - 0.214
Solution Heat Treatment Contact Cooling	<0.0005 - 0.012	0.002 - 72	0.001 - 0.38	<0.001 - 530	ND - 17	<0.001 - 0.040
Cleaning or Etching Bath	0.005 - 3.000	0.020 - 10	<5.00 - 20	<0.001 - 0.408	0.400 - 90.0	0.001 - <3.000
Cleaning or Etching Rinse	<0.0005 - 0.200	0.007 - 280	0.0011 - 480	0.00002 - 0.042	0.01 - 11	<0.001 - 160
Cleaning or Etching Scrubber Liquor	---	---	0.01	---	---	---

ND = Not Detected.

[A]These streams were assumed to be similar to Rolling with Emulsions Spent Emulsions.

Table IX-3 (Continued)

CONCENTRATION RANGE OF POLLUTANTS CONSIDERED FOR BPT REGULATION IN CORE AND ANCILLARY WASTE STREAMS - ROLLING WITH NEAT OILS SUBCATEGORY

Waste Stream	Zinc (mg/l)	Aluminum (mg/l)	Oil and Grease (mg/l)	TSS (mg/l)	pH (units)
Roll Grinding Spent Emulsions[A]	<0.005 - 5	20 - 350	1,277 - 802,000	0.540 - 3,910	6.9 - 7.1
Sawing Spent Lubricants[A]	<0.005 - 5	20 - 350	1,277 - 802,000	0.540 - 3,910	6.9 - 7.1
Annealing Atmosphere Scrubber Liquor	0.220	<0.5	---	4	6.2
Continuous Sheet Casting Spent Lubricants[A]	<0.005 - 5	20 - 350	1,277 - 802,000	0.540 - 3,910	6.9 - 7.1
Solution Heat Treatment Contact Cooling	<0.010 - 5.2	<0.1 - 9	1.5 - 370	<1 - 240	7 - 9.6
Cleaning or Etching Bath	0.500 - <30.00	30 - 70,000	7 - 100	9 - 348	.5 - 11.4
Cleaning or Etching Rinse	<0.01 - 410	<0.01 - 1,300	2 - 146	<1 - 3,640	2.1 - 11.8
Cleaning or Etching Scrubber Liquor	---	5.1	13	12	8.1

ND = Not Detected.

[A]These streams were assumed to be similar to Rolling with Emulsions Spent Emulsions.

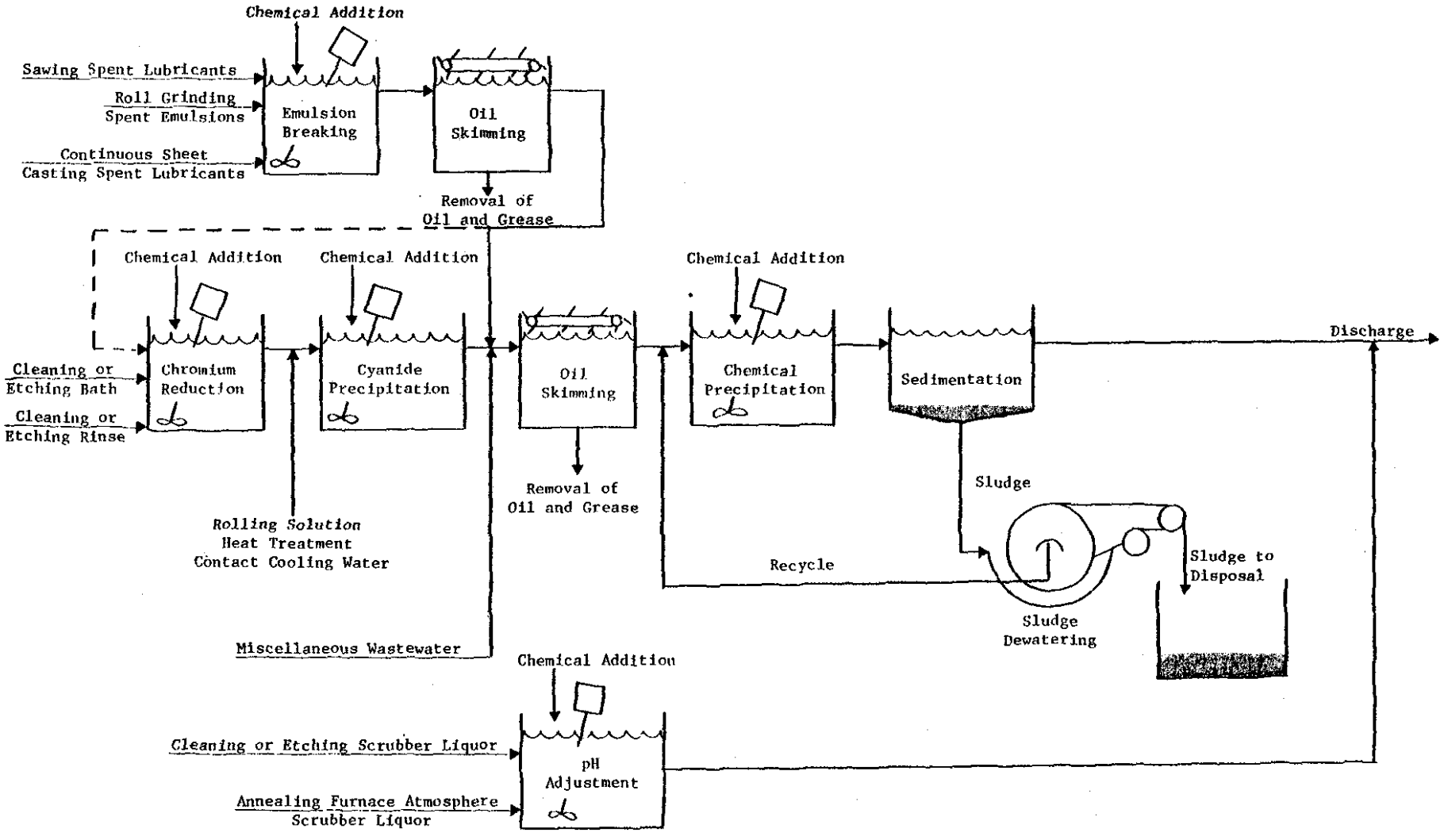

Figure IX-1

BPT TREATMENT TRAIN FOR THE ROLLING WITH NEAT OILS SUBCATEGORY

Table IX-4

BPT MASS LIMITATIONS FOR THE ROLLING WITH NEAT OILS SUBCATEGORY

Rolling With Neat Oils - Core Waste Streams Without An Annealing Furnace Scrubber

	Pollutant or Pollutant Property	Maximum for Any One Day	Maximum for Monthly Average
	mg/kkg (lb/billion lbs) of aluminum rolled with neat oils		
118	Cadmium	5.31	2.49
119	Chromium	6.96	2.82
120	Copper	31.50	16.58
121	Cyanide	4.81	1.99
122	Lead	2.49	2.16
124	Nickel	23.38	16.58
125	Selenium	19.90	9.95
128	Zinc	22.05	9.28
	Aluminum	75.44	30.84
	Oil & Grease	331.60	198.96
	Total Suspended Solids	679.78	331.60
	pH	Within the range of 7.5 to 10.0 at all times.	

Rolling With Neat Oils - Core Waste Streams With An Annealing Furnace Scrubber

	Pollutant or Pollutant Property	Maximum for Any One Day	Maximum for Monthly Average
	mg/kkg (lb/billion lbs) of aluminum rolled with neat oils		
118	Cadmium	13.74	6.44
119	Chromium	18.03	7.30
120	Copper	81.57	42.93
121	Cyanide	12.45	5.15
122	Lead	6.44	5.58
124	Nickel	60.53	42.93
125	Selenium	51.52	25.76
128	Zinc	57.10	24.04
	Aluminum	195.33	79.85
	Oil & Grease	858.60	515.16
	Total Suspended Solids	1,760.13	858.60
	pH	Within the range of 7.5 to 10.0 at all times.	

Table IX-4 (Continued)

BPT MASS LIMITATIONS FOR THE ROLLING WITH NEAT OILS SUBCATEGORY

Continuous Sheet Casting - Spent Lubricant

Pollutant or Pollutant Property		Maximum for Any One Day	Maximum for Monthly Average
mg/kkg (lb/billion lbs) of aluminum cast by continuous methods			
118	Cadmium	0.59	0.28
119	Chromium	0.77	0.31
120	Copper	3.50	1.84
121	Cyanide	0.53	0.22
122	Lead	0.28	0.24
124	Nickel	2.60	1.84
125	Selenium	2.21	1.11
128	Zinc	2.45	1.03
	Aluminum	8.39	3.43
	Oil & Grease	36.86	22.12
	Total Suspended Solids	75.56	36.86
	pH	Within the range of 7.5 to 10.0 at all times.	

Solution Heat Treatment - Contact Cooling Water

Pollutant or Pollutant Property		Maximum for Any One Day	Maximum for Monthly Average
mg/kkg (lb/billion lbs) of aluminum quenched			
118	Cadmium	2,465.60	1,155.75
119	Chromium	3,236.10	1,309.85
120	Copper	14,639.50	7,705.00
121	Cyanide	2,234.45	924.60
122	Lead	1,155.75	1,001.65
124	Nickel	10,864.05	7,705.00
125	Selenium	9,246.00	4,623.00
128	Zinc	10,247.65	4,314.80
	Aluminum	35,057.75	14,331.30
	Oil & Grease	154,100.00	92,460.00
	Total Suspended Solids	315,905.00	154,100.00
	pH	Within the range of 7.5 to 10.0 at all times.	

Table IX-4 (Continued)

BPT MASS LIMITATIONS FOR THE ROLLING WITH NEAT OILS SUBCATEGORY

Cleaning or Etching - Bath

Pollutant or Pollutant Property		Maximum for Any One Day	Maximum for Monthly Average
	mg/kkg (lb/billion lbs) of aluminum cleaned or etched		
118	Cadmium	65.41	30.66
119	Chromium	85.85	34.75
120	Copper	388.36	204.40
121	Cyanide	59.28	24.53
122	Lead	30.66	26.57
124	Nickel	288.20	204.40
125	Selenium	245.28	122.64
128	Zinc	271.85	114.46
	Aluminum	930.02	380.18
	Oil & Grease	4,088.00	2,452.80
	Total Suspended Solids	8,380.40	4,088.00
	pH	Within the range of 7.5 to 10.0 at all times.	

Cleaning or Etching - Rinse

Pollutant or Pollutant Property		Maximum for Any One Day	Maximum for Monthly Average
	mg/kkg (lb/billion lbs) of aluminum cleaned or etched		
118	Cadmium	5,395.20	2,529.00
119	Chromium	7,081.20	2,866.20
120	Copper	32,034.00	16,860.00
121	Cyanide	4,889.40	2,023.20
122	Lead	2,529.00	2,191.80
124	Nickel	23,772.60	16,860.00
125	Selenium	20,232.00	10,116.00
128	Zinc	22,423.80	9,441.60
	Aluminum	76,713.00	31,359.60
	Oil & Grease	337,200.00	202,320.00
	Total Suspended Solids	691,260.00	337,200.00
	pH	Within the range of 7.5 to 10.0 at all times.	

Table IX-4 (Continued)

BPT MASS LIMITATIONS FOR THE ROLLING WITH NEAT OILS SUBCATEGORY

Cleaning or Etching - Scrubber Liquor

	Pollutant or Pollutant Property	Maximum for Any One Day	Maximum for Monthly Average
	mg/kkg (lb/billion lbs) of aluminum cleaned or etched		
118	Cadmium	5,510.40	2,583.00
119	Chromium	7,232.40	2,927.40
120	Copper	32,718.00	17,220.00
121	Cyanide	4,993.80	2,066.40
122	Lead	2,583.00	2,238.60
124	Nickel	24,280.20	17,220.00
125	Selenium	20,664.00	10,332.00
128	Zinc	22,902.60	9,643.20
	Aluminum	78,351.00	32,029.20
	Oil & Grease	344,400.00	206,640.00
	Total Suspended Solids	706,020.00	344,400.00
	pH	Within the range of 7.5 to 10.0 at all times.	

Table IX-5

PRODUCTION OPERATIONS - ROLLING WITH EMULSIONS SUBCATEGORY

Operation	Waste Stream	Normalized BPT Discharge l/kkg	(gpt)	Production Normalizing Parameter
Core				
Rolling with emulsions	Spent emulsion	74.51	(17.87)	Mass of aluminum rolled with emulsions
Roll grinding	Spent emulsion	8.770	(2.103)	Mass of aluminum rolled with emulsions
Annealing	None	0	(0)	
Stationary casting	None	0	(0)	
Homogenizing	None	0	(0)	
Artificial aging	None	0	(0)	
Degreasing	None	0	(0)	
Sawing	Spent lubricant	4.807	(1.153)	Mass of aluminum rolled with emulsions
Miscellaneous nondescript wastewater sources	Various	3	(0.720)	Mass of aluminum rolled with emulsions
	Total Core	91.09	(21.85)	
Ancillary				
Direct chill casting	Contact cooling water	1,999	(479.4)	Mass of aluminum cast by direct chill method
Solution heat treatment	Contact cooling water	7,705	(1,848)	Mass of aluminum quenched
Cleaning or etching	Bath	204.4	(49.02)	Mass of aluminum cleaned or etched
	Rinse	16,860	(4,044)	Mass of aluminum cleaned or etched
	Scrubber Liquor	17,220	(4,130)	Mass of aluminum cleaned or etched

Table IX-6

CONCENTRATION RANGE OF POLLUTANTS CONSIDERED FOR BPT REGULATION IN CORE AND ANCILLARY WASTE STREAMS - ROLLING WITH EMULSIONS SUBCATEGORY

Waste Stream	Cadmium (mg/l)	Total Chromium (mg/l)	Copper (mg/l)	Total Cyanide (mg/l)	Lead (mg/l)	Nickel (mg/l)
Rolling Spent Emulsions	<0.0002 - 0.180	<0.001 - 1	ND - 7.40	0.016 - 2.5	<0.002 - 56.90	<0.001 - 0.214
Roll Grinding Spent Emulsions[A]	<0.0002 - 0.180	<0.001 - 1	ND - 7.40	0.016 - 2.5	<0.002 - 56.90	<0.001 - 0.214
Sawing Spent Lubricants[A]	<0.0002 - 0.180	<0.001 - 1	ND - 7.40	0.016 - 2.5	<0.002 - 56.90	<0.001 - 0.214
Direct Chill Casting Contact Cooling	<0.0005 - 0.020	<0.001 - 1.6	0.004 - 0.030	---	0.002 - 0.100	<0.001 - 0.020
Solution Heat Treatment Contact Cooling	<0.0005 - 0.012	0.002 - 72	0.001 - 0.38	<0.001 - 530	ND - 17	<0.001 - 0.040
Cleaning or Etching Bath	0.005 - 3.000	0.020 - 10.00	<5.00 - 20	<0.001 - 0.408	0.400 - 90.0	0.001 - <3.000
Cleaning or Etching Rinse	<0.0005 - 0.200	0.007 - 280	0.0011 - 480	0.00002 - 0.042	0.01 - 11	<0.001 - 160
Cleaning or Etching Scrubber Liquor	---	---	0.01	---	---	---

ND = Not Detected.

[A]Thess streams were assumed to be similar to Rolling with Emulsions Spent Emulsions.

Table IX-6 (Continued)

CONCENTRATION RANGE OF POLLUTANTS CONSIDERED FOR BPT REGULATION IN CORE AND ANCILLARY WASTE STREAMS - ROLLING WITH EMULSIONS SUBCATEGORY

Waste Stream	Zinc (mg/l)	Aluminum (mg/l)	Oil and Grease (mg/l)	TSS (mg/l)	pH (units)
Rolling Spent Emulsions	<0.005 - 5	20 - 350	1,277 - 802,000	0.540 - 3,910	6.9 - 7.1
Roll Grinding Spent Emulsions[A]	<0.005 - 5	20 - 350	1,277 - 802,000	0.540 - 3,910	6.9 - 7.1
Sawing Spent Lubricants[A]	<0.005 - 5	20 - 350	1,277 - 802,000	0.540 - 3,910	6.9 - 7.1
Direct Chill Casting Contact Cooling	<0.010 - 1.0	<0.050 - 2	<5 - 236	<1 - 220	6 - 8.4
Solution Heat Treatment Contact Cooling	<0.010 - 5.2	<0.1 - 9	1.5 - 370	<1 - 240	7 - 9.6
Cleaning or Etching Bath	0.500 - <30.00	30 - 70,000	7 - 100	9 - 348	.5 - 11.4
Cleaning or Etching Rinse	<0.01 - 410	<0.01 - 1,300	2 - 146	<1 - 3,640	2.1 - 11.8
Cleaning or Etching Scrubber Liquor	---	5.1	13	12	8.1

ND = Not Detected.

[A]These streams were assumed to be similar to Rolling with Emulsions Spent Emulsions.

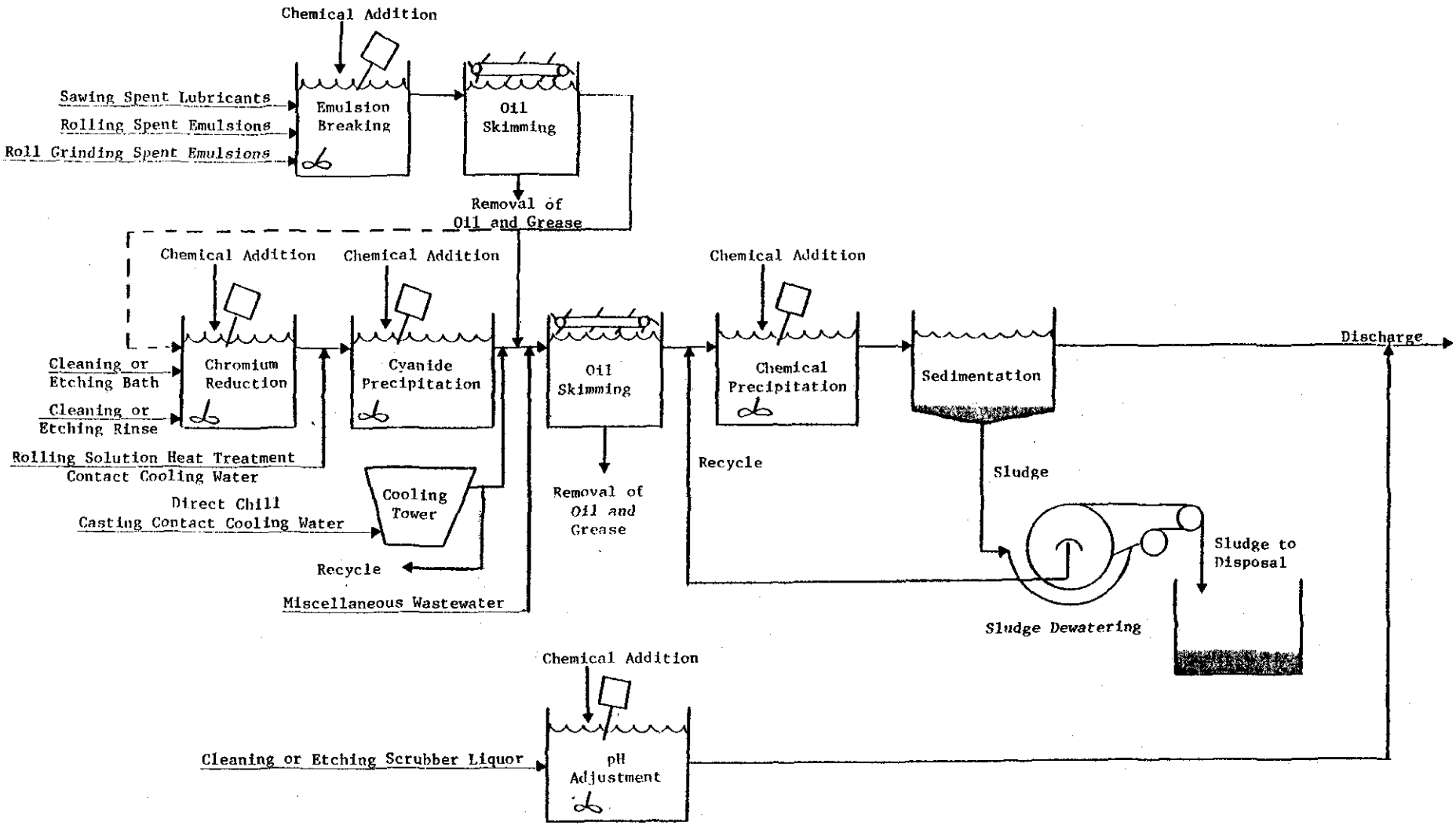

Figure IX-2

BPT TREATMENT TRAIN FOR THE ROLLING WITH EMULSIONS SUBCATEGORY

Table IX-7

BPT MASS LIMITATIONS FOR THE ROLLING WITH EMULSIONS SUBCATEGORY

Rolling With Emulsions - Core Waste Streams

Pollutant or Pollutant Property		Maximum for Any One Day	Maximum for Monthly Average
mg/kkg (lb/billion lbs) of aluminum rolled with emulsions			
118	Cadmium	29.15	13.66
119	Chromium	38.26	15.49
120	Copper	173.07	91.09
121	Cyanide	26.42	10.93
122	Lead	13.66	11.84
124	Nickel	128.44	91.09
125	Selenium	109.31	54.65
128	Zinc	121.15	51.01
	Aluminum	414.46	169.43
	Oil & Grease	1,821.80	1,093.08
	Total Suspended Solids	3,734.69	1,821.80
	pH	Within the range of 7.5 to 10.0 at all times.	

Direct Chill Casting - Contact Cooling Water

Pollutant or Pollutant Property		Maximum for Any One Day	Maximum for Monthly Average
mg/kkg (lb/billion lbs) of aluminum cast by direct chill methods			
118	Cadmium	639.68	299.85
119	Chromium	839.58	339.83
120	Copper	3,798.10	1,999.00
121	Cyanide	579.71	239.88
122	Lead	299.85	259.87
124	Nickel	2,818.59	1,999.00
125	Selenium	2,398.80	1,199.40
128	Zinc	2,658.67	1,119.44
	Aluminum	9,095.45	3,718.14
	Oil & Grease	39,980.00	23,988.00
	Total Suspended Solids	81,959.00	39,980.00
	pH	Within the range of 7.5 to 10.0 at all times.	

Table IX-7 (Continued)

BPT MASS LIMITATIONS FOR THE ROLLING WITH EMULSIONS SUBCATEGORY

Solution Heat Treatment - Contact Cooling Water

Pollutant or Pollutant Property		Maximum for Any One Day	Maximum for Monthly Average
		mg/kkg (lb/billion lbs) of aluminum quenched	
118	Cadmium	2,465.60	1,155.75
119	Chromium	3,236.10	1,309.85
120	Copper	14,639.50	7,705.00
121	Cyanide	2,234.45	924.60
122	Lead	1,155.75	1,001.65
124	Nickel	10,864.05	7,705.00
125	Selenium	9,246.00	4,623.00
128	Zinc	10,247.65	4,314.80
	Aluminum	35,057.75	14,331.30
	Oil & Grease	154,100.00	92,460.00
	Total Suspended Solids	315,905.00	154,100.00
	pH	Within the range of 7.5 to 10.0 at all times.	

Cleaning or Etching - Bath

Pollutant or Pollutant Property		Maximum for Any One Day	Maximum for Monthly Average
		mg/kkg (lb/billion lbs) of aluminum cleaned or etched	
118	Cadmium	65.41	30.66
119	Chromium	85.85	34.75
120	Copper	388.36	204.40
121	Cyanide	59.28	24.53
122	Lead	30.66	26.57
124	Nickel	288.20	204.40
125	Selenium	245.28	122.64
128	Zinc	271.85	114.46
	Aluminum	930.02	380.18
	Oil & Grease	4,088.00	2,452.80
	Total Suspended Solids	8,380.40	4,088.00
	pH	Within the range of 7.5 to 10.0 at all times.	

Table IX-7 (Continued)

BPT MASS LIMITATIONS FOR THE ROLLING WITH EMULSIONS SUBCATEGORY

Cleaning or Etching - Rinse

	Pollutant or Pollutant Property	Maximum for Any One Day	Maximum for Monthly Average
	mg/kkg (lb/billion lbs) of aluminum cleaned or etched		
118	Cadmium	5,395.20	2,529.00
119	Chromium	7,081.20	2,866.20
120	Copper	32,034.00	16,860.00
121	Cyanide	4,889.40	2,023.20
122	Lead	2,529.00	2,191.80
124	Nickel	23,772.60	16,860.00
125	Selenium	20,232.00	10,116.00
128	Zinc	22,423.80	9,441.60
	Aluminum	76,713.00	31,359.60
	Oil & Grease	337,200.00	202,320.00
	Total Suspended Solids	691,260.00	337,200.00
	pH	Within the range of 7.5 to 10.0 at all times.	

Cleaning or Etching - Scrubber Liquor

	Pollutant or Pollutant Property	Maximum for Any One Day	Maximum for Monthly Average
	mg/kkg (lb/billion lbs) of aluminum cleaned or etched		
118	Cadmium	5,510.40	2,583.00
119	Chromium	7,232.40	2,927.40
120	Copper	32,718.00	17,220.00
121	Cyanide	4,993.80	2,066.40
122	Lead	2,583.00	2,238.60
124	Nickel	24,280.20	17,220.00
125	Selenium	20,664.00	10,332.00
128	Zinc	22,902.60	9,643.20
	Aluminum	78,351.00	32,029.20
	Oil & Grease	344,400.00	206,640.00
	Total Suspended Solids	706,020.00	344,400.00
	pH	Within the range of 7.5 to 10.0 at all times.	

Table IX-8

PRODUCTION OPERATIONS - EXTRUSION SUBCATEGORY

Operation	Waste Stream	Normalized BPT Discharge 1/kkg	(gpt)	Production Normalizing Parameter
Core				
Extrusion	Die cleaning bath and rinse	40.40	(9.690)	Mass of aluminum extruded
	Die cleaning scrubber liquor	275.5	(66.08)	Mass of aluminum extruded
	Dummy block cooling	0	(0)	
Annealing	None	0	(0)	
Stationary casting	None	0	(0)	
Homogenizing	None	0	(0)	
Artificial aging	None	0	(0)	
Degreasing	Spent solvent	0	(0)	
Sawing	Spent lubricant	4.807	(1.153)	Mass of aluminum extruded
Miscellaneous nondescript wastewater sources	Various	3	(0.720)	Mass of aluminum extruded
	Total Core	323.7	(77.64)	
Ancillary				
Direct chill casting	Contact cooling water	1,999	(479.4)	Mass of aluminum cast by direct chill method
Solution and press heat treatment	Contact cooling water	7,705	(1,848)	Mass of aluminum quenched
Cleaning or etching	Bath	204.4	(49.02)	Mass of aluminum cleaned or etched
	Rinse	16,860	(4,044)	Mass of aluminum cleaned or etched
	Scrubber liquor	17,220	(4,130)	Mass of aluminum cleaned or etched
Degassing	Scrubber liquor	29.19	(70)	Mass of aluminum degassed

Table IX-9

CONCENTRATION RANGE OF POLLUTANTS CONSIDERED FOR BPT REGULATION IN CORE AND ANCILLARY WASTE STREAMS - EXTRUSION SUBCATEGORY

Waste Stream	Cadmium (mg/l)	Total Chromium (mg/l)	Copper (mg/l)	Total Cyanide (mg/l)	Lead (mg/l)	Nickel (mg/l)
Extrusion Die Cleaning Bath[A]	0.005 - 3.000	0.020 - 10.00	<5.00 - 20	<0.001 - 0.408	.400 - 90.0	0.001 - <3.000
Extrusion Die Cleaning Rinse[B]	<0.0005 - 0.200	0.007 - 280	0.0011 - 480	0.00002 - 0.042	0.01 - 11	<0.001 - 160
Extrusion Die Cleaning Scrubber Liquor[C]	---	---	0.01	---	---	---
Sawing Spent Lubricants[D]	<0.0002 - 0.180	<0.001 - 1	ND - 7.40	0.016 - 2.5	<0.002 - 56.90	<0.001 - 0.214
Direct Chill Casting Contact Cooling	<0.0005 - 0.020	<0.001 - 1.6	0.004 - 0.030	---	0.002 - 0.100	<0.001 - 0.020
Solution and Press Heat Treatment Contact Cooling	<0.0005 - 0.012	0.002 - 72	0.001 - 0.38	<0.001 - 530	ND - 17	<0.001 - 0.040
Cleaning or Etching Bath	0.005 - 3.000	0.020 - 10.00	<5.00 - 20	<0.001 - 0.408	0.400 - 90.0	0.001 - <3.000
Cleaning or Etching Rinse	<0.0005 - 0.200	0.007 - 280	0.0011 - 480	0.00002 - 0.042	0.01 - 11	<0.001 - 160
Cleaning or Etching Scrubber Liquor	---	---	0.01	---	---	---
Degassing Scrubber Liquor	0.0008 - 0.011	0.014 - 0.09	0.017 - 0.25	---	0.019 - 0.45	<0.001 - 0.023

ND = Not Detected

[A]This stream was assumed to be similar to the Cleaning or Etching Bath.

[B]This stream was assumed to be similar to the Cleaning or Etching Rinse.

[C]This stream was assumed to be similar to the Cleaning or Etching Scrubber Liquor.

[D]This stream was assumed to be similar to the Rolling With Emulsions Spent Emulsions.

Table IX-9 (Continued)

CONCENTRATION RANGE OF POLLUTANTS CONSIDERED FOR BPT REGULATION IN CORE AND ANCILLARY WASTE STREAMS - EXTRUSION SUBCATEGORY

Waste Stream	Zinc (mg/l)	Aluminum (mg/l)	Oil and Grease (mg/l)	TSS (mg/l)	pH (units)
Extrusion Die Cleaning Bath[A]	0.500 - <30.00	30 - 70,000	7 - 100	9 - 348	.5 - 11.4
Extrusion Die Cleaning Rinse[B]	<0.01 - 410	<0.01 - 1,300	2 - 146	<1 - 3,640	2.1 - 11.8
Extrusion Die Cleaning Scrubber Liquor[C]	---	5.1	13	12	8.1
Sawing Spent Lubricants[D]	<0.005 - 5	20 - 350	1,277 - 802,000	0.540 - 3,910	6.9 - 7.1
Direct Chill Casting Contact Cooling	<0.010 - 1.0	<0.050 - 2	<5 - 236	<1 - 220	6 - 8.4
Solution and Press Heat Treatment Contact Cooling	<0.010 - 5.2	<0.100 - 9	1.5 - 370	<1 - 240	7 - 9.6
Cleaning or Etching Bath	0.500 - <30.00	30 - 70,000	7 - 100	9 - 348	.5 - 11.4
Cleaning or Etching Rinse	<0.01 - 410	<0.01 - 1,300	2 - 146	<1 - 3,640	2.1 - 11.8
Cleaning or Etching Scrubber Liquor	---	5.1	13	12	8.1
Degassing Scrubber Liquor	0.13 - 1.3	<0.5 - 10	<5	<2 - 102	7.2 - 7.8

ND = Not Detected

[A]This stream was assumed to be similar to the Cleaning or Etching Bath.

[B]This stream was assumed to be similar to the Cleaning or Etching Rinse.

[C]This stream was assumed to be similar to the Cleaning or Etching Scrubber Liquor.

[D]This stream was assumed to be similar to the Rolling With Emulsions Spent Emulsions.

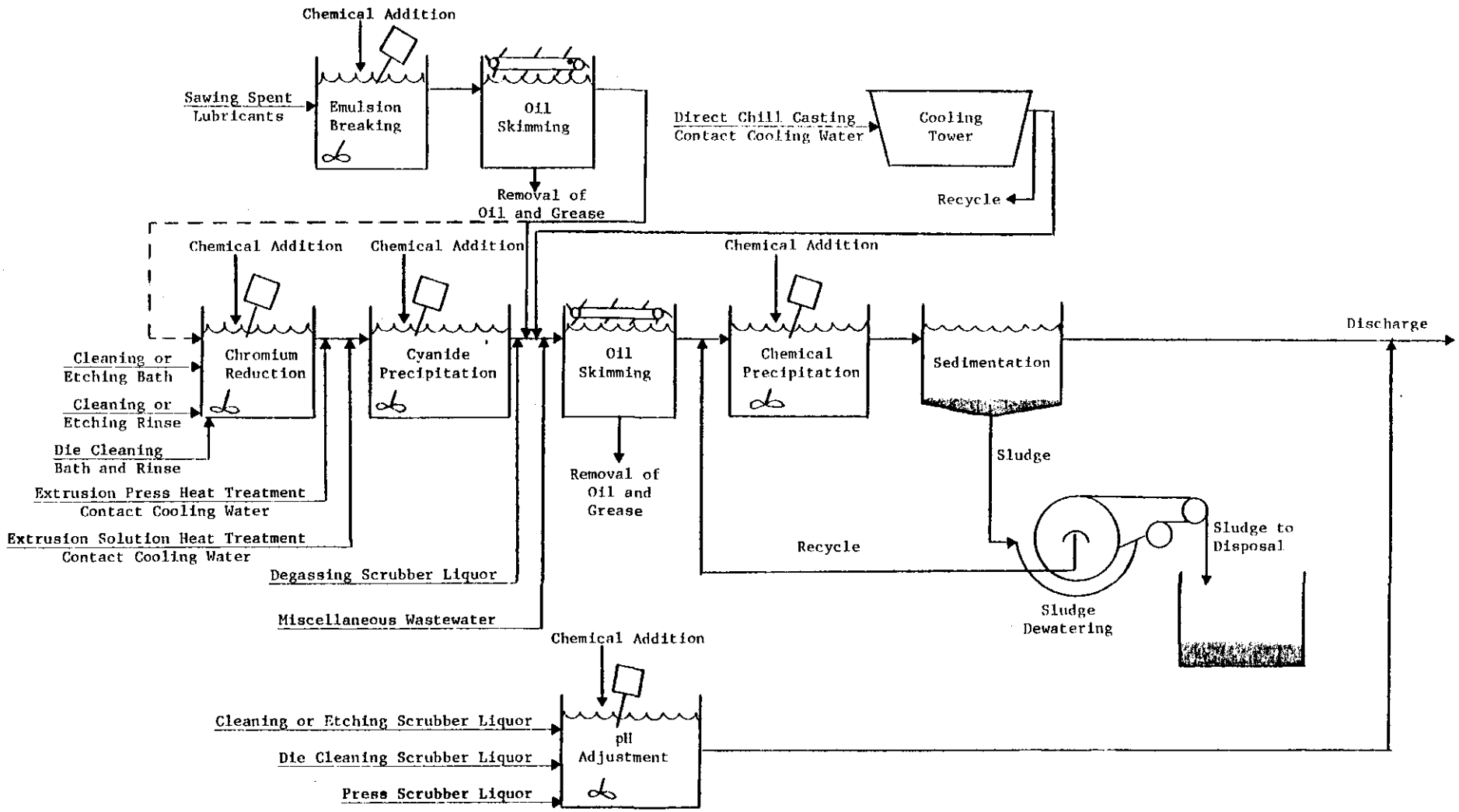

Figure IX-3

BPT TREATMENT TRAIN FOR THE EXTRUSION SUBCATEGORY

Table IX-10

BPT MASS LIMITATIONS FOR THE EXTRUSION SUBCATEGORY

Extrusion - Core Waste Streams

Pollutant or Pollutant Property		Maximum for Any One Day	Maximum for Monthly Average
		mg/kkg (lb/billion lbs) of aluminum extruded	
118	Cadmium	103.58	48.55
119	Chromium	135.95	55.03
120	Copper	615.03	323.70
121	Cyanide	93.87	38.84
122	Lead	48.56	42.08
124	Nickel	456.42	323.70
125	Selenium	388.44	194.22
128	Zinc	430.52	181.27
	Aluminum	1,472.84	602.08
	Oil & Grease	6,474.00	3,884.40
	Total Suspended Solids	13,271.70	6,474.00
	pH	Within the range of 7.5 to 10.0 at all times.	

Direct Chill Casting - Contact Cooling Water

Pollutant or Pollutant Property		Maximum for Any One Day	Maximum for Monthly Average
		mg/kkg (lb/billion lbs) of aluminum cast by direct chill methods	
118	Cadmium	639.68	299.85
119	Chromium	839.58	339.83
120	Copper	3,798.10	1,999.00
121	Cyanide	579.71	239.88
122	Lead	299.85	259.87
124	Nickel	2,818.59	1,999.00
125	Selenium	2,398.80	1,199.40
128	Zinc	2,658.67	1,119.44
	Aluminum	9,095.45	3,718.14
	Oil & Grease	39,980.00	23,988.00
	Total Suspended Solids	81,959.00	39,980.00
	pH	Within the range of 7.5 to 10.0 at all times.	

Table IX-10 (Continued)

BPT MASS LIMITATIONS FOR THE EXTRUSION SUBCATEGORY

Solution and Press Heat Treatment - Contact Cooling Water

Pollutant or Pollutant Property		Maximum for Any One Day	Maximum for Monthly Average
		mg/kkg (lb/billion lbs) of aluminum quenched	
118	Cadmium	2,465.60	1,155.75
119	Chromium	3,236.10	1,309.85
120	Copper	14,639.50	7,705.00
121	Cyanide	2,234.45	924.60
122	Lead	1,155.75	1,001.65
124	Nickel	10,864.05	7,705.00
125	Selenium	9,246.00	4,623.00
128	Zinc	10,247.65	4,314.80
	Aluminum	35,057.75	14,331.30
	Oil & Grease	154,100.00	92,460.00
	Total Suspended Solids	315,905.00	154,100.00
	pH	Within the range of 7.5 to 10.0 at all times.	

Cleaning or Etching - Bath

Pollutant or Pollutant Property		Maximum for Any One Day	Maximum for Monthly Average
		mg/kkg (lb/billion lbs) of aluminum cleaned or etched	
118	Cadmium	65.41	30.66
119	Chromium	85.85	34.75
120	Copper	388.36	204.40
121	Cyanide	59.28	24.53
122	Lead	30.66	26.57
124	Nickel	288.20	204.40
125	Selenium	245.28	122.64
128	Zinc	271.85	114.46
	Aluminum	930.02	380.18
	Oil & Grease	4,088.00	2,452.80
	Total Suspended Solids	8,380.40	4,088.00
	pH	Within the range of 7.5 to 10.0 at all times.	

Table IX-10 (Continued)

BPT MASS LIMITATIONS FOR THE EXTRUSION SUBCATEGORY

Cleaning or Etching - Rinse

Pollutant or Pollutant Property		Maximum for Any One Day	Maximum for Monthly Average
		mg/kkg (lb/billion lbs) of aluminum cleaned or etched	
118	Cadmium	5,395.20	2,529.00
119	Chromium	7,081.20	2,866.20
120	Copper	32,034.00	16,860.00
121	Cyanide	4,889.40	2,023.20
122	Lead	2,529.00	2,191.80
124	Nickel	23,772.60	16,860.00
125	Selenium	20,232.00	10,116.00
128	Zinc	22,423.80	9,441.60
	Aluminum	76,713.00	31,359.60
	Oil & Grease	337,200.00	202,320.00
	Total Suspended Solids	691,260.00	337,200.00
	pH	Within the range of 7.5 to 10.0 at all times.	

Cleaning or Etching - Scrubber Liquor

Pollutant or Pollutant Property		Maximum for Any One Day	Maximum for Monthly Average
		mg/kkg (lb/billion lbs) of aluminum cleaned or etched	
118	Cadmium	5,510.40	2,583.00
119	Chromium	7,232.40	2,927.40
120	Copper	32,718.00	17,220.00
121	Cyanide	4,993.80	2,066.40
122	Lead	2,583.00	2,238.60
124	Nickel	24,280.20	17,220.00
125	Selenium	20,664.00	10,332.00
128	Zinc	22,902.60	9,643.20
	Aluminum	78,351.00	32,029.20
	Oil & Grease	344,400.00	206,640.00
	Total Suspended Solids	706,020.00	344,400.00
	pH	Within the range of 7.5 to 10.0 at all times.	

Table IX-10 (Continued)

BPT MASS LIMITATIONS FOR THE EXTRUSION SUBCATEGORY

Degassing - Scrubber Liquor

Pollutant or Pollutant Property		Maximum for Any One Day	Maximum for Monthly Average
		mg/kkg (lb/billion lbs) of aluminum degassed	
118	Cadmium	9.34	4.38
119	Chromium	12.26	4.96
120	Copper	55.46	29.19
121	Cyanide	8.47	3.50
122	Lead	4.38	3.79
124	Nickel	41.16	29.19
125	Selenium	35.03	17.51
128	Zinc	38.82	16.35
	Aluminum	132.81	54.29
	Oil & Grease	583.80	350.28
	Total Suspended Solids	1,196.79	583.80
	pH	Within the range of 7.5 to 10.0 at all times.	

Table IX-11

PRODUCTION OPERATIONS - FORGING SUBCATEGORY

Operation	Waste Stream	Normalized BPT Discharge 1/kkg	(gpt)	Production Normalizing Parameter
Core				
Forging	None	0	(0)	
Annealing	None	0	(0)	
Artificial aging	None	0	(0)	
Degreasing	Spent solvent	0	(0)	
Sawing	Spent lubricant	4.807	(1.153)	Mass of aluminum forged
Miscellaneous nondescript wastewater sources	Various	3	(0.720)	Mass of aluminum forged
	Total Core	7.807	(1.873)	
Ancillary				
Forging	Scrubber liquor	1,547	(371.0)	Mass of aluminum forged
Solution heat treatment	Contact cooling water	7,705	(1,848)	Mass of aluminum quenched
Cleaning or etching	Bath	204.4	(49.02)	Mass of aluminum cleaned or etched
	Rinse	16,860	(4,044)	Mass of aluminum cleaned or etched
	Scrubber liquor	17,220	(4,130)	Mass of aluminum cleaned or etched

Table IX-12

CONCENTRATION RANGE OF POLLUTANTS CONSIDERED FOR BPT REGULATION IN CORE AND ANCILLARY WASTE STREAMS - FORGING SUBCATEGORY

Waste Stream	Cadmium (mg/l)	Total Chromium (mg/l)	Copper (mg/l)	Total Cyanide (mg/l)	Lead (mg/l)	Nickel (mg/l)
Sawing Spent Lubricants[A]	<0.0002 - 0.180	<0.001 - 1	ND - 7.40	0.016 - 2.5	<0.002 - 56.90	<0.001 - 0.214
Forging Scrubber Liquor	---	---	0.010	---	2.000	---
Solution Heat Treatment Contact Cooling	<0.0005 - 0.012	0.002 - 72	0.001 - 0.38	<0.001 - 530	ND - 17	<0.001 - 0.040
Cleaning or Etching Bath	0.005 - 3.000	0.020 - 10.00	<5.00 - 20	<0.001 - 0.408	0.400 - 90.0	0.001 - <3.000
Cleaning or Etching Rinse	<0.0005 - 0.200	0.007 - 280	0.0011 - 480	0.00002 - 0.042	0.01 - 11	<0.001 - 160
Cleaning or Etching Scrubber Liquor	---	---	0.01	---	---	---

ND = Not Detected.

[A]This stream was assumed to be similar to Rolling with Emulsions Spent Emulsions.

Table IX-12 (Continued)

CONCENTRATION RANGE OF POLLUTANTS CONSIDERED FOR BPT REGULATION IN CORE AND ANCILLARY WASTE STREAMS - FORGING SUBCATEGORY

Waste Stream	Zinc (mg/l)	Aluminum (mg/l)	Oil and Grease (mg/l)	TSS (mg/l)	pH (units)
Sawing Spent Lubricants[A]	<0.005 - 5	20 - 350	1,277 - 802,000	0.540 - 3,910	6.9 - 7.1
Forging Scrubber Liquor	0.003	0.5	162	2	---
Solution Heat Treatment Contact Cooling	<0.010 - 5.2	<0.1 - 9	1.5 - 370	<1 - 240	7 - 9.6
Cleaning or Etching Bath	0.500 - <30.00	30 - 70,000	7 - 100	9 - 348	.5 - 11.4
Cleaning or Etching Rinse	<0.01 - 410	<0.01 - 1,300	2 - 146	<1 - 3,640	2.1 - 11.8
Cleaning or Etching Scrubber Liquor	---	5.1	13	12	8.1

ND = Not Detected.

[A]This stream was assumed to be similar to Rolling with Emulsions Spent Emulsions.

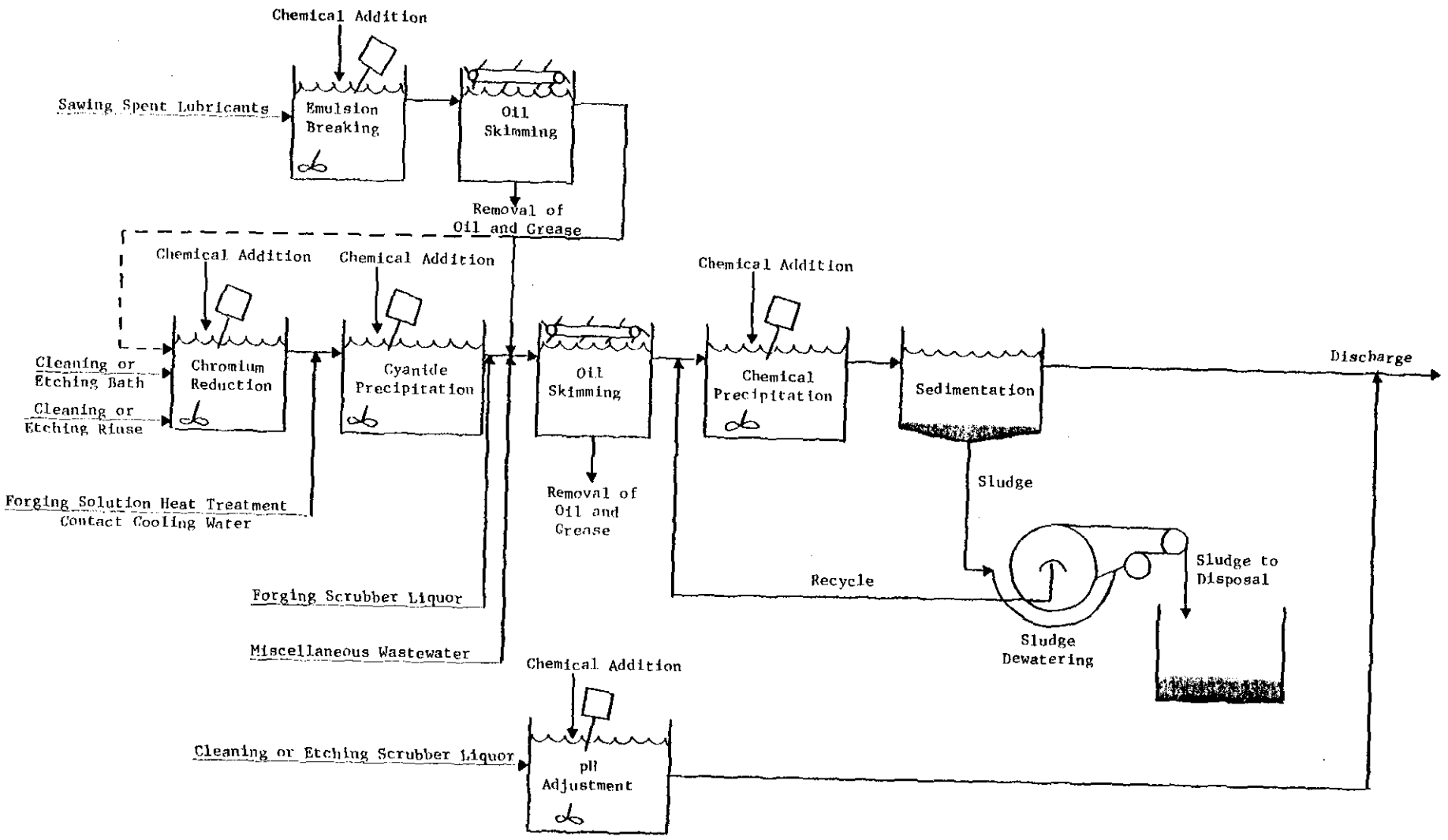

Figure IX-4

BPT TREATMENT TRAIN FOR THE FORGING SUBCATEGORY

Table IX-13

BPT MASS LIMITATIONS FOR THE FORGING SUBCATEGORY

Forging - Core Waste Streams

Pollutant or Pollutant Property		Maximum for Any One Day	Maximum for Monthly Average
		mg/kkg (lb/billion lbs) of aluminum forged	
118	Cadmium	2.50	1.17
119	Chromium	3.28	1.33
120	Copper	14.83	7.81
121	Cyanide	2.26	0.94
122	Lead	1.17	1.01
124	Nickel	11.01	7.81
125	Selenium	9.37	4.68
128	Zinc	10.38	4.37
	Aluminum	35.52	14.52
	Oil & Grease	156.14	93.68
	Total Suspended Solids	320.09	156.14
	pH	Within the range of 7.5 to 10.0 at all times.	

Forging - Scrubber Liquor

Pollutant or Pollutant Property		Maximum for Any One Day	Maximum for Monthly Average
		mg/kkg (lb/billion lbs) of aluminum forged	
118	Cadmium	495.04	232.05
119	Chromium	649.74	262.99
120	Copper	2,939.30	1,547.00
121	Cyanide	448.63	185.64
122	Lead	232.05	201.11
124	Nickel	2,181.27	1,547.00
125	Selenium	1,856.40	928.20
128	Zinc	2,057.51	866.32
	Aluminum	7,038.85	2,877.42
	Oil & Grease	30,940.00	18,564.00
	Total Suspended Solids	63,427.00	30,940.00
	pH	Within the range of 7.5 to 10.0 at all times.	

Table IX-13 (Continued)

BPT MASS LIMITATIONS FOR THE FORGING SUBCATEGORY

Solution Heat Treatment - Contact Cooling Water

Pollutant or Pollutant Property		Maximum for Any One Day	Maximum for Monthly Average
		mg/kkg (lb/billion lbs) of aluminum quenched	
118	Cadmium	2,465.60	1,155.75
119	Chromium	3,236.10	1,309.85
120	Copper	14,639.50	7,705.00
121	Cyanide	2,234.45	924.60
122	Lead	1,155.75	1,001.65
124	Nickel	10,864.05	7,705.00
125	Selenium	9,246.00	4,623.00
128	Zinc	10,247.65	4,314.80
	Aluminum	35,057.75	14,331.30
	Oil & Grease	154,100.00	92,460.00
	Total Suspended Solids	315,905.00	154,100.00
	pH	Within the range of 7.5 to 10.0 at all times.	

Cleaning or Etching - Bath

Pollutant or Pollutant Property		Maximum for Any One Day	Maximum for Monthly Average
		mg/kkg (lb/billion lbs) of aluminum cleaned or etched	
118	Cadmium	65.41	30.66
119	Chromium	85.85	34.75
120	Copper	388.36	204.40
121	Cyanide	59.28	24.53
122	Lead	30.66	26.57
124	Nickel	288.20	204.40
125	Selenium	245.28	122.64
128	Zinc	271.85	114.46
	Aluminum	930.02	380.18
	Oil & Grease	4,088.00	2,452.80
	Total Suspended Solids	8,380.40	4,088.00
	pH	Within the range of 7.5 to 10.0 at all times.	

Table IX-13 (Continued)

BPT MASS LIMITATIONS FOR THE FORGING SUBCATEGORY

Cleaning or Etching - Rinse

	Pollutant or Pollutant Property	Maximum for Any One Day	Maximum for Monthly Average
	mg/kkg (lb/billion lbs) of aluminum cleaned or etched		
118	Cadmium	5,395.20	2,529.00
119	Chromium	7,081.20	2,866.20
120	Copper	32,034.00	16,860.00
121	Cyanide	4,889.40	2,023.20
122	Lead	2,529.00	2,191.80
124	Nickel	23,772.60	16,860.00
125	Selenium	20,232.00	10,116.00
128	Zinc	22,423.80	9,441.60
	Aluminum	76,713.00	31,359.60
	Oil & Grease	337,200.00	202,320.00
	Total Suspended Solids	691,260.00	337,200.00
	pH	Within the range of 7.5 to 10.0 at all times.	

Cleaning or Etching - Scrubber Liquor

	Pollutant or Pollutant Property	Maximum for Any One Day	Maximum for Monthly Average
	mg/kkg (lb/billion lbs) of aluminum cleaned or etched		
118	Cadmium	5,510.40	2,583.00
119	Chromium	7,232.40	2,927.40
120	Copper	32,718.00	17,220.00
121	Cyanide	4,993.80	2,066.40
122	Lead	2,583.00	2,238.60
124	Nickel	24,280.20	17,220.00
125	Selenium	20,664.00	10,332.00
128	Zinc	22,902.60	9,643.20
	Aluminum	78,351.00	32,029.20
	Oil & Grease	344,400.00	206,640.00
	Total Suspended Solids	706,020.00	344,400.00
	pH	Within the range of 7.5 to 10.0 at all times.	

Table IX-14

PRODUCTION OPERATIONS - DRAWING WITH NEAT OILS SUBCATEGORY

Operation	Waste Stream	Normalized BPT Discharge 1/kkg	(gpt)	Production Normalizing Parameter
Core				
Drawing with neat oils	Spent oils	0	(0)	
Annealing	None	0	(0)	
Stationary casting	None	0	(0)	
Homogenizing	None	0	(0)	
Artificial aging	None	0	(0)	
Degreasing	Spent solvent	0	(0)	
Sawing	Spent lubricant	4.807	(1.153)	Mass of aluminum drawn with neat oils
Swaging	None	0	(0)	
Miscellaneous nondescript wastewater sources	Various	3	(0.720)	Mass of aluminum drawn with neat oils
	Total Core	7.807	(1.873)	
Ancillary				
Continous rod casting	Contact cooling water	1,042	(249.9)	Mass of rod cast by continuous method
	Spent lubricant	1.843	(0.442)	Mass of rod cast by continuous method
Solution heat treatment	Contact cooling water	7,705	(1,848)	Mass of aluminum quenched
Cleaning or etching	Bath	204.4	(49.02)	Mass of aluminum cleaned or etched
	Rinse	16,860	(4,044)	Mass of aluminum cleaned or etched
	Scrubber liquor	17,220	(4,130)	Mass of aluminum cleaned or etched

Table IX-15

CONCENTRATION RANGE OF POLLUTANTS CONSIDERED FOR BPT REGULATION IN CORE AND ANCILLARY WASTE STREAMS - DRAWING WITH NEAT OILS SUBCATEGORY

Waste Stream	Cadmium (mg/l)	Total Chromium (mg/l)	Copper (mg/l)	Total Cyanide (mg/l)	Lead (mg/l)	Nickel (mg/l)
Sawing Spent Lubricants[A]	<0.0002 - 0.180	<0.001 - 1	ND - 7.40	0.016 - 2.5	<0.002 - 56.90	<0.001 - 0.214
Continuous Rod Casting Contact Cooling[B]	<0.0005 - 0.020	<0.001 - 1.6	0.004 - 0.030	---	0.002 - 0.100	<0.001 - 0.020
Continuous Rod Casting Spent Lubricants[A]	<0.0002 - 0.180	<0.001 - 1	ND - 7.40	0.016 - 2.5	<0.002 - 56.90	<0.001 - 0.214
Solution Heat Treatment Contact Cooling	<0.001 - 0.012	0.002 - 72	0.001 - 0.38	<0.001 - 530	ND - 17	<0.001 - 0.040
Cleaning or Etching Bath	0.005 - 3.000	0.020 - 10.00	<5.00 - 20	<0.001 - 0.408	0.400 - 90.0	0.001 - <3.000
Cleaning or Etching Rinse	<0.0005 - 0.200	0.007 - 280	0.0011 - 480	0.00002 - 0.042	0.01 - 11	<0.001 - 160
Cleaning or Etching Scrubber Liquor	---	---	0.01	---	---	---

ND = Not Detected.

[A]These streams were assumed to be similar to Rolling with Emulsions Spent Emulsions.

[B]This stream was assumed to be similar to Direct Chill Casting Contact Cooling.

Table IX-15 (Continued)

CONCENTRATION RANGE OF POLLUTANTS CONSIDERED FOR BPT REGULATION IN CORE AND ANCILLARY WASTE STREAMS - DRAWING WITH NEAT OILS SUBCATEGORY

Waste Stream	Zinc (mg/l)	Aluminum (mg/l)	Oil and Grease (mg/l)	TSS (mg/l)	pH (units)
Sawing Spent Lubricants[A]	<0.005 - 5	20 - 350	1,277 - 802,000	0.540 - 3,910	6.9 - 7.1
Continuous Rod Casting Contact Cooling[B]	<0.010 - 1.0	<0.050 - 2	<5 - 236	<1 - 220	6 - 8.4
Continuous Rod Casting Spent Lubricants[A]	<0.005 - 5	20 - 350	1,277 - 802,000	0.540 - 3,910	6.9 - 7.1
Solution Heat Treatment Contact Cooling	<0.010 - 5.2	<0.1 - 9	1.5 - 370	<1 - 240	7 - 9.6
Cleaning or Etching Bath	0.500 - <30.00	30 - 70,000	7 - 100	9 - 348	.5 - 11.4
Cleaning or Etching Rinse	<0.01 - 410	<0.01 - 1,300	2 - 146	<1 - 3,640	2.1 - 11.8
Cleaning or Etching Scrubber Liquor	---	5.1	13	12	8.1

ND = Not Detected.

[A]These streams were assumed to be similar to Rolling with Emulsions Spent Emulsions.

[B]This stream was assumed to be similar to Direct Chill Casting Contact Cooling.

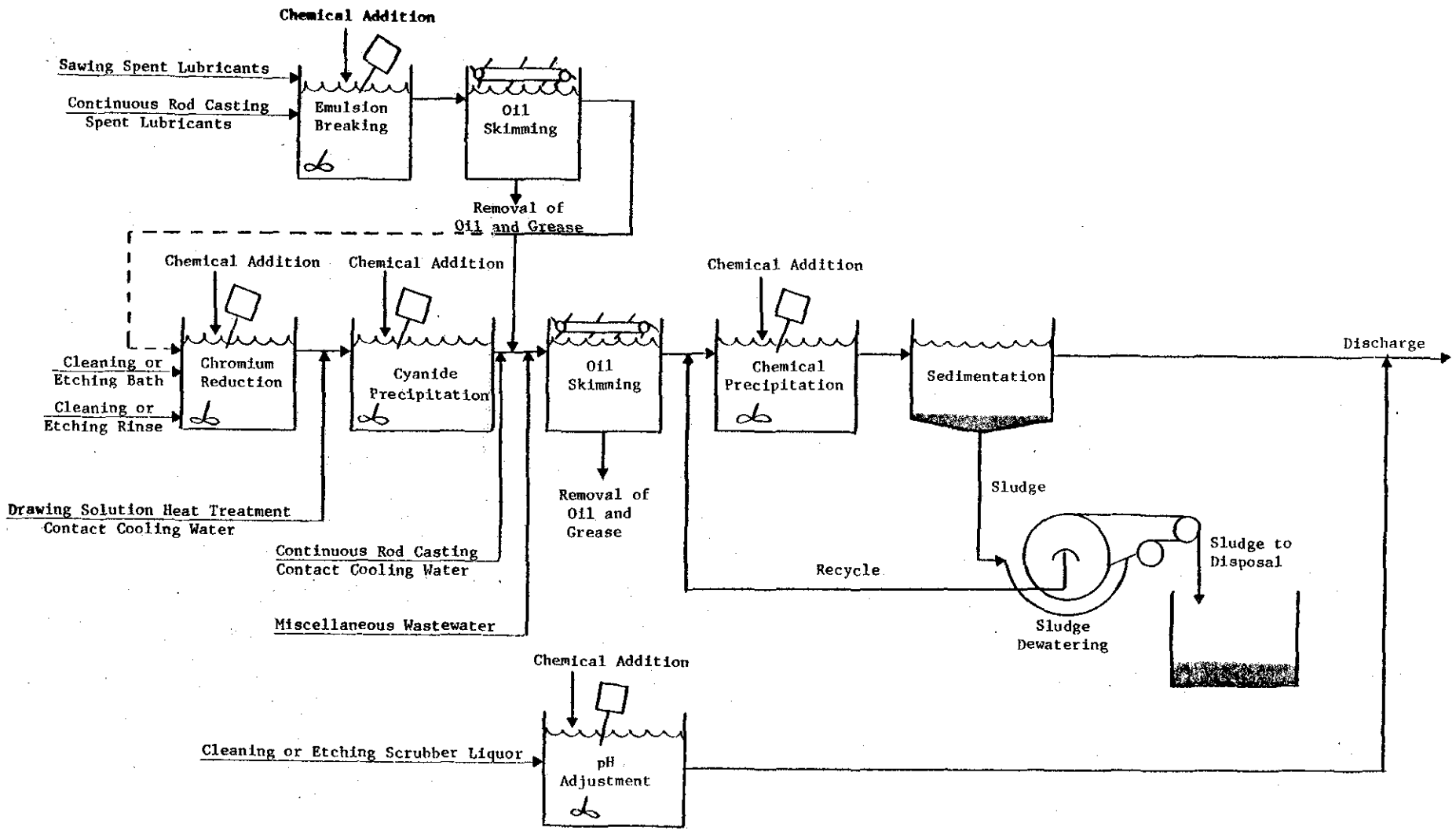

Figure IX-5

BPT TREATMENT TRAIN FOR THE DRAWING WITH NEAT OILS SUBCATEGORY

Table IX-16

BPT MASS LIMITATIONS FOR THE DRAWING WITH NEAT OILS SUBCATEGORY

Drawing With Neat Oils - Core Waste Streams

	Pollutant or Pollutant Property	Maximum for Any One Day	Maximum for Monthly Average
	mg/kkg (lb/billion lbs) of aluminum drawn with neat oils		
118	Cadmium	2.50	1.17
119	Chromium	3.28	1.33
120	Copper	14.83	7.81
121	Cyanide	2.26	0.94
122	Lead	1.17	1.01
124	Nickel	11.01	7.81
125	Selenium	9.37	4.68
128	Zinc	10.38	4.37
	Aluminum	35.52	14.52
	Oil & Grease	156.14	93.68
	Total Suspended Solids	320.09	156.14
	pH	Within the range of 7.5 to 10.0 at all times.	

Continuous Rod Casting - Contact Cooling Water

	Pollutant or Pollutant Property	Maximum for Any One Day	Maximum for Monthly Average
	mg/kkg (lb/billion lbs) of aluminum cast by continuous methods		
118	Cadmium	333.44	156.30
119	Chromium	437.64	177.14
120	Copper	1,979.80	1,042.00
121	Cyanide	302.18	125.04
122	Lead	156.30	135.46
124	Nickel	1,469.22	1,042.00
125	Selenium	1,250.40	625.20
128	Zinc	1,385.86	583.52
	Aluminum	4,741.10	1,938.12
	Oil & Grease	20,840.00	12,504.00
	Total Suspended Solids	42,722.00	20,840.00
	pH	Within the range of 7.5 to 10.0 at all times.	

Table IX-16 (Continued)

BPT MASS LIMITATIONS FOR THE DRAWING WITH NEAT OILS SUBCATEGORY

Continuous Rod Casting - Spent Lubricant

Pollutant or Pollutant Property		Maximum for Any One Day	Maximum for Monthly Average
		mg/kkg (lb/billion lbs) of aluminum cast by continuous methods	
118	Cadmium	0.59	0.28
119	Chromium	0.77	0.31
120	Copper	3.50	1.84
121	Cyanide	0.53	0.22
122	Lead	0.28	0.24
124	Nickel	2.60	1.84
125	Selenium	2.21	1.11
128	Zinc	2.45	1.03
	Aluminum	8.39	3.43
	Oil & Grease	36.86	22.12
	Total Suspended Solids	75.56	36.86
	pH	Within the range of 7.5 to 10.0 at all times.	

Solution Heat Treatment - Contact Cooling Water

Pollutant or Pollutant Property		Maximum for Any One Day	Maximum for Monthly Average
		mg/kkg (lb/billion lbs) of aluminum quenched	
118	Cadmium	2,465.60	1,155.75
119	Chromium	3,236.10	1,309.85
120	Copper	14,639.50	7,705.00
121	Cyanide	2,234.45	924.60
122	Lead	1,155.75	1,001.65
124	Nickel	10,864.05	7,705.00
125	Selenium	9,246.00	4,623.00
128	Zinc	10,247.65	4,314.80
	Aluminum	35,057.75	14,331.30
	Oil & Grease	154,100.00	92,460.00
	Total Suspended Solids	315,905.00	154,100.00
	pH	Within the range of 7.5 to 10.0 at all times.	

Table IX-16 (Continued)

BPT MASS LIMITATIONS FOR THE DRAWING WITH NEAT OILS SUBCATEGORY

Cleaning or Etching - Bath

Pollutant or Pollutant Property		Maximum for Any One Day	Maximum for Monthly Average
	mg/kkg (lb/billion lbs) of aluminum cleaned or etched		
118	Cadmium	65.41	30.66
119	Chromium	85.85	34.75
120	Copper	388.36	204.40
121	Cyanide	59.28	24.53
122	Lead	30.66	26.57
124	Nickel	288.20	204.40
125	Selenium	245.28	122.64
128	Zinc	271.85	114.46
	Aluminum	930.02	380.18
	Oil & Grease	4,088.00	2,452.80
	Total Suspended Solids	8,380.40	4,088.00
	pH	Within the range of 7.5 to 10.0 at all times.	

Cleaning or Etching - Rinse

Pollutant or Pollutant Property		Maximum for Any One Day	Maximum for Monthly Average
	mg/kkg (lb/billion lbs) of aluminum cleaned or etched		
118	Cadmium	5,395.20	2,529.00
119	Chromium	7,081.20	2,866.20
120	Copper	32,034.00	16,860.00
121	Cyanide	4,889.40	2,023.20
122	Lead	2,529.00	2,191.80
124	Nickel	23,772.60	16,860.00
125	Selenium	20,232.00	10,116.00
128	Zinc	22,423.80	9,441.60
	Aluminum	76,713.00	31,359.60
	Oil & Grease	337,200.00	202,320.00
	Total Suspended Solids	691,260.00	337,200.00
	pH	Within the range of 7.5 to 10.0 at all times.	

Table IX-16 (Continued)

BPT MASS LIMITATIONS FOR THE DRAWING WITH NEAT OILS SUBCATEGORY

Cleaning or Etching - Scrubber Liquor

Pollutant or Pollutant Property		Maximum for Any One Day	Maximum for Monthly Average
	mg/kkg (lb/billion lbs) of aluminum cleaned or etched		
118	Cadmium	5,510.40	2,583.00
119	Chromium	7,232.40	2,927.40
120	Copper	32,718.00	17,220.00
121	Cyanide	4,993.80	2,066.40
122	Lead	2,583.00	2,238.60
124	Nickel	24,280.20	17,220.00
125	Selenium	20,664.00	10,332.00
128	Zinc	22,902.60	9,643.20
	Aluminum	78,351.00	32,029.20
	Oil & Grease	344,400.00	206,640.00
	Total Suspended Solids	706,020.00	344,400.00
	pH	Within the range of 7.5 to 10.0 at all times.	

Table IX-17

PRODUCTION OPERATIONS - DRAWING WITH EMULSIONS OR SOAPS SUBCATEGORY

Operation	Waste Stream	Normalized BPT Discharge l/kkg	(gpt)	Production Normalizing Parameter
Core				
Drawing with emulsions or soaps	Spent lubricants	416.5	(99.89)	Mass of aluminum drawn with emulsions or soaps
Annealing	None	0	(0)	
Stationary casting	None	0	(0)	
Homogenizing	None	0	(0)	
Artificial aging	None	0	(0)	
Degreasing	Spent solvent	0	(0)	
Sawing	Spent lubricant	4.807	(1.153)	Mass of aluminum drawn with emulsions or soaps
Swaging	None	0	(0)	
Miscellaneous nondescript wastewater sources	Various	3	(0.720)	Mass of aluminum drawn with emulsions or soaps
	Total Core	424.3	(101.8)	
Ancillary				
Continuous rod casting	Contact cooling water	1,042	(249.9)	Mass of rod cast by continuous methods
	Spent lubricant	1.843	(0.442)	Mass of rod cast by continuous methods
Solution heat treatment	Contact cooling water	7,705	(1,848)	Mass of aluminum quenched
Cleaning or etching	Bath	204.4	(49.02)	Mass of aluminum cleaned or etched
	Rinse	16,860	(4,044)	Mass of aluminum cleaned or etched
	Scrubber liquor	17,220	(4,130)	Mass of aluminum cleaned or etched

Table IX-18

COMPARISON OF WASTEWATER DISCHARGE RATES
FROM DRAWING EMULSION AND SOAP STREAMS

Plant Number	Wastewater (gal/ton)	Wastewater (l/kkg)	Order of Increasing Production	Lubricant Type	Product Type
1	0	0	8	Emulsion	Tube
2	0.8100	3.377	10	Emulsion	Wire
3	2.810	11.72	6	Emulsion	Wire
4	6.279	26.18	9	Emulsion	Wire
5	62.50	260.6	3	Emulsion	Wire
6	260.0	1,084	2	Soap	Wire
7	267.0	1,113	5	Emulsion	Wire
8	257,100	1,072,000	1	Soap	Wire
9	*	*	4	Emulsion	Wire
10	*	*	*	Emulsion	Wire
11	*	*	*	Emulsion	Wire
12	*	*	7	Soap and Emulsion	Wire
13	*	*	*	Soap	Wire

*Sufficient data not available to calculate these values.

Table IX-19

CONCENTRATION RANGE OF POLLUTANTS CONSIDERED FOR BPT REGULATION IN CORE AND ANCILLARY WASTE STREAMS - DRAWING WITH EMULSIONS OR SOAPS SUBCATEGORY

Waste Stream	Cadmium (mg/l)	Total Chromium (mg/l)	Copper (mg/l)	Total Cyanide (mg/l)	Lead (mg/l)	Nickel (mg/l)
Drawing Spent Emulsions or Soaps[A]	<0.0002 - 0.180	<0.001 - 1	ND - 7.40	0.016 - 2.5	<0.002 - 56.90	<0.001 - 0.214
Sawing Spent Lubricants[A]	<0.0002 - 0.180	<0.001 - 1	ND - 7.40	0.016 - 2.5	<0.002 - 56.90	<0.001 - 0.214
Continuous Rod Casting Contact Cooling[B]	<0.0005 - 0.020	<0.001 - 1.6	0.004 - 0.030	---	0.002 - 0.100	<0.001 - 0.020
Continuous Rod Casting Spent Lubricants[A]	<0.0002 - 0.180	<0.001 - 1	ND - 7.40	0.016 - 2.5	<0.002 - 56.90	<0.001 - 0.214
Solution Heat Treatment Contact Cooling	<0.0005 - 0.012	0.002 - 72	0.001 - 0.38	<0.001 - 530	ND - 17	<0.001 - 0.040
Cleaning or Etching Bath	0.005 - 3.000	0.020 - 10.00	<5.00 - 20	<0.001 - 0.408	0.400 - 90.0	0.001 - <3.000
Cleaning or Etching Rinse	<0.0005 - 0.200	0.007 - 280	0.0011 - 480	0.00002 - 0.042	0.01 - 11	<0.001 - 160
Cleaning or Etching Scrubber Liquor	---	---	0.01	---	---	---

ND = Not Detected.

[A]These streams were assumed to be similar to Rolling with Emulsions Spent Emulsions.

[B]This stream was assumed to be similar to Direct Chill Casting Contact Cooling.

Table IX-19 (Continued)

CONCENTRATION RANGE OF POLLUTANTS CONSIDERED FOR BPT REGULATION IN CORE AND ANCILLARY WASTE STREAMS - DRAWING WITH EMULSIONS OR SOAPS SUBCATEGORY

Waste Stream	Zinc (mg/l)	Aluminum (mg/l)	Oil and Grease (mg/l)	TSS (mg/l)	pH (units)
Drawing Spent Emulsions or Soaps[A]	<0.005 - 5	20 - 350	1,277 - 802,000	0.540 - 3,910	6.9 - 7.1
Sawing Spent Lubricants[A]	<0.005 - 5	20 - 350	1,277 - 802,000	0.540 - 3,910	6.9 - 7.1
Continuous Rod Casting Contact Cooling[B]	<0.010 - 1.0	<0.050 - 2	<5 - 236	<1 - 220	6 - 8.4
Continuous Rod Casting Spent Lubricants[A]	<0.005 - 5	20 - 350	1,277 - 802,000	0.540 - 3,910	6.9 - 7.1
Solution Heat Treatment Contact Cooling	<0.010 - 5.2	<0.1 - 9	1.5 - 370	<1 - 240	7 - 9.6
Cleaning or Etching Bath	0.500 - <30.00	30 - 70,000	7 - 100	9 - 348	.5 - 11.4
Cleaning or Etching Rinse	<0.01 - 410	<0.01 - 1,300	2 - 146	<1 - 3,640	2.1 - 11.8
Cleaning or Etching Scrubber Liquor	---	5.1	13	12	8.1

ND = Not Detected.

[A]These streams were assumed to be similar to Rolling with Emulsions Spent Emulsions.

[B]This stream was assumed to be similar to Direct Chill Casting Contact Cooling.

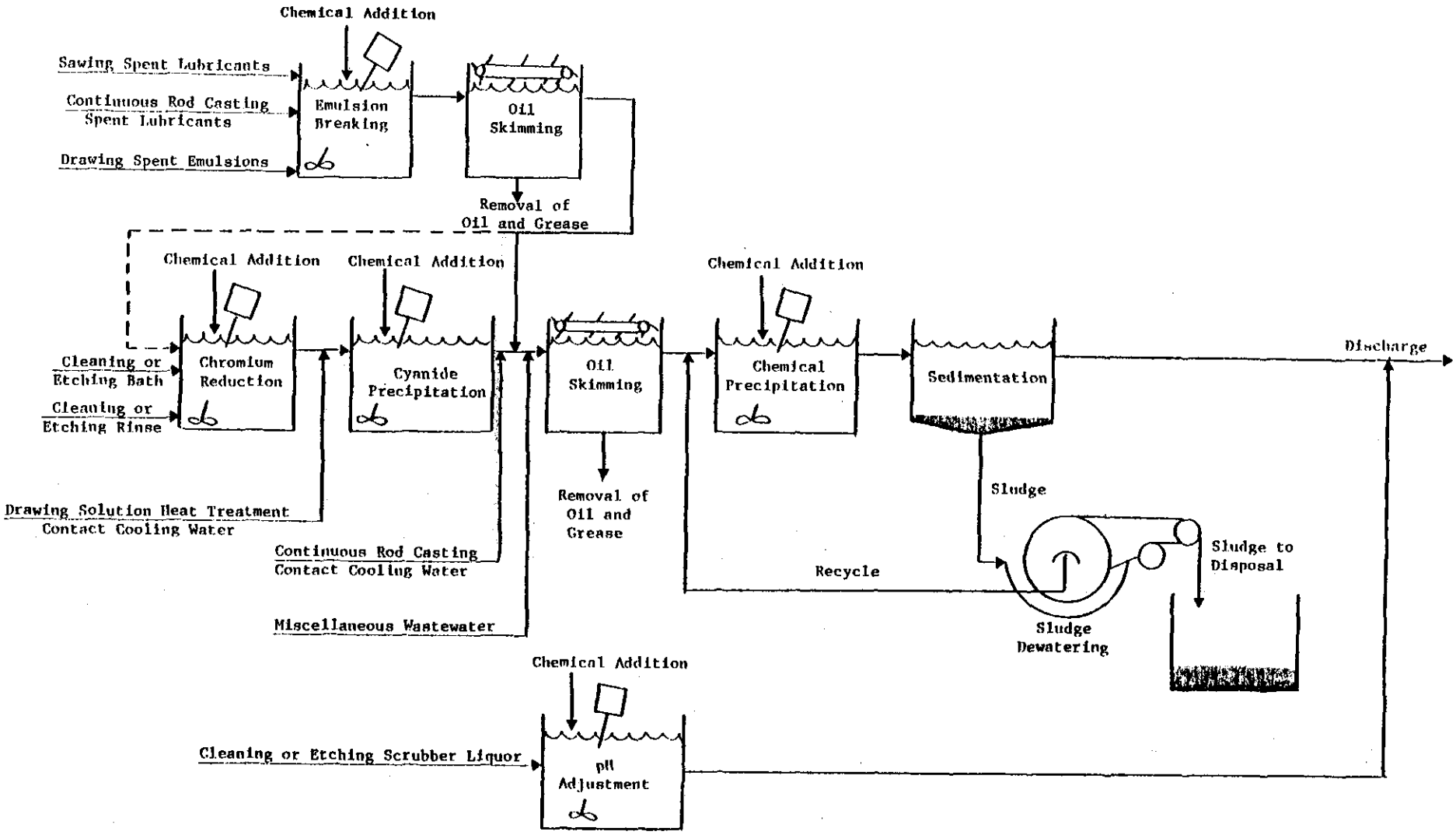

Figure IX-6

BPT TREATMENT TRAIN FOR THE DRAWING WITH EMULSIONS OR SOAPS SUBCATEGORY

Table IX-20

BPT MASS LIMITATIONS FOR THE DRAWING WITH EMULSIONS OR SOAPS SUBCATEGORY

Drawing With Emulsions or Soaps - Core Waste Streams

Pollutant or Pollutant Property		Maximum for Any One Day	Maximum for Monthly Average
mg/kkg (lb/billion lbs) of aluminum drawn with emulsions or soaps			
118	Cadmium	135.78	63.65
119	Chromium	178.21	72.13
120	Copper	806.17	424.30
121	Cyanide	123.05	50.92
122	Lead	63.65	55.16
124	Nickel	598.26	424.30
125	Selenium	509.16	254.58
128	Zinc	564.32	237.61
	Aluminum	1,930.57	789.20
	Oil & Grease	8,486.00	5,091.60
	Total Suspended Solids	17,396.30	8,486.00
	pH	Within the range of 7.5 to 10.0 at all times.	

Continuous Rod Casting - Contact Cooling Water

Pollutant or Pollutant Property		Maximum for Any One Day	Maximum for Monthly Average
mg/kkg (lb/billion lbs) of aluminum cast by continuous methods			
118	Cadmium	333.44	156.30
119	Chromium	437.64	177.14
120	Copper	1,979.80	1,042.00
121	Cyanide	302.18	125.04
122	Lead	156.30	135.46
124	Nickel	1,469.22	1,042.00
125	Selenium	1,250.40	625.20
128	Zinc	1,385.86	583.52
	Aluminum	4,741.10	1,938.12
	Oil & Grease	20,840.00	12,504.00
	Total Suspended Solids	42,722.00	20,840.00
	pH	Within the range of 7.5 to 10.0 at all times.	

Table IX-20 (Continued)

BPT MASS LIMITATIONS FOR THE DRAWING WITH EMULSIONS OR SOAPS SUBCATEGORY

Continuous Rod Casting - Spent Lubricant

Pollutant or Pollutant Property		Maximum for Any One Day	Maximum for Monthly Average
		mg/kkg (lb/billion lbs) of aluminum cast by continuous methods	
118	Cadmium	0.59	0.28
119	Chromium	0.77	0.31
120	Copper	3.50	1.84
121	Cyanide	0.53	0.22
122	Lead	0.28	0.24
124	Nickel	2.60	1.84
125	Selenium	2.21	1.11
128	Zinc	2.45	1.03
	Aluminum	8.39	3.43
	Oil & Grease	36.86	22.12
	Total Suspended Solids	75.56	36.86
	pH	Within the range of 7.5 to 10.0 at all times.	

Solution Heat Treatment - Contact Cooling Water

Pollutant or Pollutant Property		Maximum for Any One Day	Maximum for Monthly Average
		mg/kkg (lb/billion lbs) of aluminum quenched	
118	Cadmium	2,465.60	1,155.75
119	Chromium	3,236.10	1,309.85
120	Copper	14,639.50	7,705.00
121	Cyanide	2,234.45	924.60
122	Lead	1,155.75	1,001.65
124	Nickel	10,864.05	7,705.00
125	Selenium	9,246.00	4,623.00
128	Zinc	10,247.65	4,314.80
	Aluminum	35,057.75	14,331.30
	Oil & Grease	154,100.00	92,460.00
	Total Suspended Solids	315,905.00	154,100.00
	pH	Within the range of 7.5 to 10.0 at all times.	

Table IX-20 (Continued)

BPT MASS LIMITATIONS FOR THE DRAWING WITH EMULSIONS OR SOAPS SUBCATEGORY

Cleaning or Etching - Bath

	Pollutant or Pollutant Property	Maximum for Any One Day	Maximum for Monthly Average
	mg/kkg (lb/billion lbs) of aluminum cleaned or etched		
118	Cadmium	65.41	30.66
119	Chromium	85.85	34.75
120	Copper	388.36	204.40
121	Cyanide	59.28	24.53
122	Lead	30.66	26.57
124	Nickel	288.20	204.40
125	Selenium	245.28	122.64
128	Zinc	271.85	114.46
	Aluminum	930.02	380.18
	Oil & Grease	4,088.00	2,452.80
	Total Suspended Solids	8,380.40	4,088.00
	pH	Within the range of 7.5 to 10.0 at all times.	

Cleaning or Etching - Rinse

	Pollutant or Pollutant Property	Maximum for Any One Day	Maximum for Monthly Average
	mg/kkg (lb/billion lbs) of aluminum cleaned or etched		
118	Cadmium	5,395.20	2,529.00
119	Chromium	7,081.20	2,866.20
120	Copper	32,034.00	16,860.00
121	Cyanide	4,889.40	2,023.20
122	Lead	2,529.00	2,191.80
124	Nickel	23,772.60	16,860.00
125	Selenium	20,232.00	10,116.00
128	Zinc	22,423.80	9,441.60
	Aluminum	76,713.00	31,359.60
	Oil & Grease	337,200.00	202,320.00
	Total Suspended Solids	691,260.00	337,200.00
	pH	Within the range of 7.5 to 10.0 at all times.	

Table IX-20 (Continued)

BPT MASS LIMITATIONS FOR THE DRAWING WITH EMULSIONS OR SOAPS SUBCATEGORY

Cleaning or Etching - Scrubber Liquor

Pollutant or Pollutant Property		Maximum for Any One Day	Maximum for Monthly Average
	mg/kkg (lb/billion lbs) of aluminum cleaned or etched		
118	Cadmium	5,510.40	2,583.00
119	Chromium	7,232.40	2,927.40
120	Copper	32,718.00	17,220.00
121	Cyanide	4,993.80	2,066.40
122	Lead	2,583.00	2,238.60
124	Nickel	24,280.20	17,220.00
125	Selenium	20,664.00	10,332.00
128	Zinc	22,902.60	9,643.20
	Aluminum	78,351.00	32,029.20
	Oil & Grease	344,400.00	206,640.00
	Total Suspended Solids	706,020.00	344,400.00
	pH	Within the range of 7.5 to 10.0 at all times.	

Table IX-21

ALLOWABLE DISCHARGE CALCULATIONS FOR PLANT X IN EXAMPLE 1

Waste Stream	Average Daily Production (kkg/day)	BPT Regulatory One-Day Maximum TSS Discharge (mg/kkg)*	BPT Regulatory 10-Day Average TSS Discharge (mg/kkg)*	BPT Allowable One-Day Maximum TSS Discharge (mg/day)	BPT Allowable 10-Day Average TSS Discharge (mg/day)
Extrusion Core	200	13,271.70	6,474.00	2,654,340	1,294,800
Direct Chill Casting Contact Cooling Water	200	81,959.00	39,980.00	16,391,800	7,996,000
Degassing Scrubber Liquor	200	1,196.79	583.80	239,360	116,760
Solution Heat Treatment Contact Cooling Water	140	315,905.00	154,100.00	44,226,700	21,574,000
Etch Line Bath	100	8,380.40	4,088.00	838,040	408,800
Etch Line Rinse	100	691,260.00	337,200.00	69,126,000	33,720,000
Total				133,476,240** or 133.5 kg/day	65,110,360** or 65.1 kg/day

*These values are taken from Table IX-10.

**Allowable discharge concentrations (mg/l) can be calculated by dividing these values by the plant's daily process water discharge (gal).

Table IX-22

ALLOWABLE DISCHARGE CALCULATIONS FOR PLANT Y IN EXAMPLE 2

Waste Stream	Average Daily Production (kkg/day)	BPT Regulatory One-Day Maximum Zn Discharge (mg/kkg)*	BPT Regulatory 10-Day Average Zn Discharge (mg/kkg)*	BPT Allowable One-Day Maximum Zn Discharge (mg/day)	BPT Allowable 10-Day Average Zn Discharge (mg/day)
Rolling with Emulsions Core	66.6	121.15	51.01	8,070	3,400
Drawing with Emulsions or Soaps Core	6.7	564.32	237.61	3,780	1,590
Direct Chill Casting Contact Cooling Water	33.3	2,658.67	1,119.44	88,530	37,280
Continuous Rod Casting Contact Cooling Water	6.7	1,385.86	583.52	9,290	3,910
Continuous Rod Casting Spent Lubricant	6.7	2.45	1.03	20	10
Solution Heat Treatment Contact Cooling Water	23.3	10,247.65	4,314.80	238,770	100,530
Etch Line Bath	20.6	271.85	114.46	5,600	2,360
Etch Line Rinse	20.6	22,423.80	9,441.60	461,930	194,500
Total				815,990** or 0.8 kg/day	343,580** or 0.3 kg/day

*These values are taken from Table IX-7 and Table IX-20.

**Allowable discharge concentrations (mg/l) can be calculated by dividing these values by the plant's daily process water discharge (gal).

SECTION X

BEST AVAILABLE TECHNOLOGY ECONOMICALLY ACHIEVABLE

The effluent limitations which must be achieved by July 1, 1984 are based on the best control and treatment technology employed by a specific point source within the industrial category or subcategory, or by another industry where it is readily transferable. Emphasis is placed on additional treatment techniques applied at the end of the treatment systems currently employed for BPT, as well as improvements in reagent control, process control, and treatment technology optimization.

The factors considered in assessing best available technology economically achievable (BAT) include the age of equipment and facilities involved, the process employed, process changes, nonwater quality environmental impacts (including energy requirements), and the costs of application of such technology. BAT technology represents the best existing economically achievable performance of plants of various ages, sizes, processes, or other characteristics. Those categories whose existing performance is uniformly inadequate may require a transfer of BAT from a different subcategory or category. BAT may include process changes or internal controls, even when these are not common industry practice. This level of technology also considers those plant processes and control and treatment technologies which at pilot plant and other levels have demonstrated both technological performance and economic viability at a level sufficient to justify investigation.

TECHNICAL APPROACH TO BAT

In pursuing this second round of effluent regulations, the Agency reviewed a wide range of technology options and evaluated the available possibilities to ensure that the most effective and beneficial technologies were used as the basis of BAT. To accomplish this, the Agency elected to examine at least three significant technology alternatives which could be applied to aluminum forming as BAT options and which would represent substantial progress toward prevention of polluting the environment above and beyond progress achievable by BPT. The statutory assessment of BAT considers costs, but does not require a balancing of costs against effluent reduction benefits [see Weyerhaeuser v. Costle, 11 ERC 2149 (D.C. Cir. 1978)]; however, in assessing the proposed BAT, the Agency has given substantial weight to the reasonableness of costs.

Under these guidelines, six levels of BAT were evaluated for the category. Option 1 is BPT treatment. Option 2 is BPT treatment

plus flow reduction and in-plant controls. Options 3, 4, 5, and 6 provide additional levels of treatment. Options 1, 2, 3, 4, and 5 technologies are, in general, equally applicable to all the subcategories of the aluminum forming category, while Option 6 is applicable to one subcategory (forging). Each treatment produces similar concentrations of pollutants in the the effluent from all subcategories. Mass limitations derived from these options may vary; however, because of the impact of different production normalized wastewater discharge flows.

Options 1, 2, and 3 are based on the chemical emulsion breaking technology from the BPT technology train, whereas Options 4, 5, and 6 are based on thermal emulsion breaking.

In summary form, the treatment technologies considered for aluminum forming are:

Option 1 (Figure X-1) is based on:

Oil skimming,

Lime and settle (chemical precipitation of metals followed by sedimentation), and

pH adjustment; and, where required,

Cyanide removal,

Hexavalent chromium reduction, and

Chemical emulsion breaking.

(This option is equivalent to the technology on which BPT is based.)

Option 2 (Figure X-2) is based on:

Option 1, plus process wastewater flow reduction by the following methods:

- Heat treatment contact cooling water recycle through cooling towers.
- Continuous rod casting contact cooling water recycle.
- Air pollution control scrubber liquor recycle.
- Hauling or regeneration of spent cleaning or etching baths.

- Countercurrent cascade rinsing or other water efficient methods applied to cleaning or etching and extrusion die cleaning rinses.
- Alternative fluxing or in-line refining methods, neither of which require wet air pollution control, for degassing aluminum melts.

Option 3 (Figure X-3) is based on:

Option 2, plus multimedia filtration at the end of the Option 2 treatment train.

Option 4 (Figure X-4) is based on:

Option 1 plus process wastewater flow reduction by the following methods:

- Thermal emulsion breaking or contractor hauling for concentrated emulsions.
- Heat treatment contact cooling water recycle through cooling towers.
- Continuous rod casting contact cooling water recycle.
- Air pollution control scrubber liquor recycle.
- Hauling or regeneration of spent cleaning or etching baths.
- Countercurrent cascade rinsing or other water efficient methods applied to cleaning or etching and extrusion die cleaning rinses.
- Alternative fluxing or in-line refining methods, which do not require wet air pollution control, for degassing aluminum melts.

Option 5 (Figure X-5) is based on:

Option 4, plus multimedia filtration at the end of the Option 4 treatment train.

Option 6 (Figure X-6) is based on:

Option 5, plus granular activated carbon treatment as a preliminary treatment step to remove toxic organics.

OPTION 1

Option 1 represents the BPT end-of-pipe treatment technology. This treatment train consists of preliminary treatment when necessary of emulsion breaking and skimming, hexavalent chromium reduction, and cyanide removal. The effluent from preliminary treatment is combined with other wastewaters for central treatment by skimming and lime and settle.

OPTION 2

Option 2 builds upon the BPT end-of-pipe treatment technologies of skimming, lime and settle with preliminary treatment to reduce chromium, remove cyanide and break emulsions. Flow reduction measures, based on in-process changes, are the mechanisms for reducing pollutant discharges at Option 2. Flow reduction measures eliminate some wastewater streams and concentrate the pollutants in others. Treatment of a more concentrated stream allows a greater net removal of pollutants and economies of treating a reduced flow. Methods for reducing process wastewater generation or discharge include:

Heat Treatment Contact Cooling Water Recycle Through Cooling Towers. The cooling and recycle of heat treatment contact cooling water is practiced by 15 plants. The function of heat treatment contact cooling water is to remove heat quickly from the aluminum. Therefore, the principal requirements of the water are that it be cool and not contain dissolved solids at a level that would cause water marks or other surface imperfections. There is sufficient industry experience to assure the success of this technology using cooling towers or heat exchangers. Although four plants have reported that they do not discharge any quench water by reason of continued recycle, some blowdown or periodic cleaning is likely to be needed to prevent a buildup of dissolved and suspended solids.

Scrubber Liquor Recycle. The recycle of scrubber liquor from cleaning or etching process baths is practiced by two plants, on forging scrubbers at two plants, and by one plant for its annealing scrubber. The scrubber water picks up particulates and fumes from the air. Scrubbers have relatively low water quality requirements for efficient operation, accordingly, recycle of scrubber liquor is appropriate for aluminum forming operations. A blowdown or periodic cleaning is necessary to prevent the buildup of dissolved and suspended solids.

Zero Discharge of Cleaning or Etching Chemical Baths Through Contract Hauling or Bath Regeneration. The Agency has selected contract hauling as the basis for achieving zero discharge from cleaning or etching chemical baths; however, as discussed in Section VII (p. 683), there are technical advantages to regenerating these baths and as discussed in Section VIII (p. 773), chemical bath regeneration is likely to be a lower cost option than contract hauling and in many instances the value of the regenerated material will offset the cost of regenerative treatment.

Fifteen aluminum forming plants achieve zero discharge through chemical bath regeneration. These plants achieve this by periodically supplementing the caustic and acid baths. There are commercial processes available for regenerating baths which are patented or claimed confidential. In general, these regeneration processes are based on the fundamental concepts described in Section VII (p. 683).

Countercurrent Cascade Rinsing Applied to Cleaning or Etching and Die Cleaning Rinses. Countercurrent cascade rinsing is a mechanism commonly encountered in electroplating and other metal processing operations (Section VII, p. 679). The cleanest water is used for final rinsing of an item, preceded by rinse stages using water with progressively more contaminants to partially rinse the item. Clean make-up water is added to the final rinse, and contaminated rinse water is discharged from the initial rinse stage. The make-up water for all but the final rinse stage is from the following stage.

The countercurrent cascade rinsing process substantially improves efficiencies of water use for rinsing. For example, the use of a two-stage countercurrent rinse can reduce water usage to approximately one-tenth of that needed for a single-stage rinse to achieve the same level of product cleanliness. Similarly, a three-stage countercurrent rinse would reduce water usage to approximately one-thirtieth. Countercurrent cascade rinsing is practiced at two aluminum forming plants. In addition, although not strictly countercurrent rinsing, two plants reuse the rinse water following one cleaning or etching bath for the rinse of a preceding bath.

Alternative Fluxing Methods. There are a number of alternatives available to replace systems requiring wet scrubbers for degassing operations (melting furnace air pollution control). Among the alternatives are fluxes not requiring wet air pollution control and in-line refining methods that eliminate the need for fluxing. All aluminum forming plants but one have adopted the alternative fluxing methods and thereby eliminated their scrubbers.

OPTION 3

Option 3 builds upon the technical requirements of Option 2 by adding conventional mixed-media filtration after the Option 2 technology train and the in-process flow reduction controls. Option 3 differs from Option 5 only in the type of emulsion treatment it is based on. Option 3 is based on the chemical emulsion breaking technology, which does not achieve zero discharge.

OPTION 4

Option 4 builds upon the technologies established for Option 2. Thermal emulsion breaking is the principal mechanism for reducing pollutant discharges at Option 4.

Thermal Emulsion Breaking or Contractor Hauling to Achieve Zero Discharge of Concentrated Emulsions. The Agency has noted that recycle or contractor hauling of several waste streams (e.g., continuous rod casting lubricant, rolling emulsions, roll grinding emulsions, drawing emulsions, and saw oils) are common practices. Organics were found to be constituents of these wastes. Contractor hauling eliminated potential wastewater discharges, obviated the need for organics removal (granular activated carbon), and was the most cost-effective approach for many plants. It was, therefore, the method suggested and included in the cost estimate for most of these waste streams.

Thermal emulsion breaking also eliminates any discharge from the concentrated emulsion waste streams by concentrating the oil and distilling the water. The water can then be reused in the process. EPA is aware of one application of thermal emulsion breaking in this category. In addition, it is being used at four copper forming plants to treat their emulsified lubricants. The processes performed and lubricants used in copper forming are similar to those in aluminum forming, and as such the thermal emulsion breaking technology is applicable to the aluminum forming concentrated emulsion waste streams.

Thermal emulsion breaking does not eliminate contractor hauling of spent lubricants, but it does reduce the volume of waste to be disposed of, an important consideration in the face of the rising disposal costs under the Resource Conservation and Recovery Act.

Two aluminum forming plants reported achieving zero discharge of their emulsified wastes through treatment. One plant treats their emulsion with chemical emulsion breaking, followed by ultrafiltration, with the concentrate being recycled back through chemical emulsion breaking, and the filtrate is clarified and reused elsewhere in the plant. The second plant applies gravity separation to their emulsions and skims the oil, which is further processed and used as fuel. The water fraction, which still contains 0.1 percent oil, is sprayed onto a field.

OPTION 5

Option 5 builds upon the technical requirements of Option 4 by adding conventional mixed-media filtration. The filter suggested is of the gravity, mixed-media type, although other filters, such as rapid sand or pressure filters would perform equally well.

OPTION 6

Option 6 builds upon the technical requirements of Option 5. Option 6 complements the other technologies by applying granular activated carbon (GAC) to waste streams for which toxic organics were selected. By applying granular activated carbon as a preliminary treatment step rather than end-of-pipe treatment for waste streams where organics were found at significant levels, treatment efficiency is improved, and total treatment costs are reduced.

BAT OPTION SELECTION

A draft technical development document was circulated for limited review by industry and environmental groups. As a result of comments received, the Agency carefully considered various technology options to determine their technological and economic feasibility in light of their beneficial characteristics.

The Agency originally considered three options for BAT. They represented a combination of in-process changes via flow reduction and alternate fluxing or in-line refining methods, two add-on treatment technologies, granular media filtration and granular activated carbon, and an oil recovery technology, thermal emulsion breaking (Options 4, 5, and 6). EPA recognized that rapidly escalating energy prices during the last decade resulted in higher costs associated with technologies like thermal emulsion breaking. As a result, the Agency introduced two additional options which utilized chemical emulsion breaking instead of thermal emulsion breaking as lower cost alternatives (Options 2 and 3).

Industry Cost and Environmental Benefits of the Various Treatment Options

As a means of evaluating the economic achievability of each of these options, the Agency developed estimates of the compliance costs and benefits. An estimate of capital and annual costs for the six BAT options was prepared for each subcategory as an aid in choosing the best BAT option. The cost estimates for the total subcategory are presented in Table X-1. The cost estimates for 49 of 58 direct dischargers only are presented in Table X-2. All costs are based on January 1978 dollars.

The cost methodology has been described in detail in Section VIII. For most treatment technologies, standard cost literature sources were used for module capital and annual costs. Data from several sources were combined to yield average or typical costs as a function of flow or other characteristic design parameters. In a small number of modules, the technical literature was

reviewed to identify the key design criteria, which were then used as a basis for vendor contacts. The resulting costs for individual pieces of equipment were combined to yield module costs. In either case, the cost data were coupled with flow data from each plant to establish system costs for each facility.

A cost estimate was made for each option for each facility. For some facilities the cost estimate for Option 2 was lower than the cost estimate for Option 1. This occurs because the cost for installing a treatment system plus retrofit for flow reduction is lower than the cost for installing a treatment system sized to handle the plant's unreduced flow. Since it is assumed that any given plant will install the least costly option, the Option 1 cost estimate was set equal to the Option 2 cost for those cases where the original estimate indicates that the Option 1 cost would be greater than the Option 2 cost.

The total costs presented in Tables X-1 and X-2 represent estimates which were revised to consider plants which reported discharge flow from anodizing and conversion coating operations, and the treatment technology required for those wastewater streams which were not considered to be in-scope waste streams when the original cost estimates were prepared. In addition, the annual cost estimates were adjusted by subtracting 10 percent of the capital cost from the annual cost. This was done because an error in the original costing methodology double-counted the value for amortization.

Pollutant reduction benefit estimates were calculated for each option for each subcategory. The benefits that the treatment technologies can achieve are presented in Tables X-3 through X-8. The benefits that the treatment technologies will achieve for direct dischargers are presented in Tables X-9 through X-13. The benefits that the treatment technologies can achieve for a "normal plant" in each subcategory are presented in Tables X-14 through X-19.

The first step in the calculation of the benefit estimates is the calculation of production noralized raw waste values (mg/kkg) for each pollutant in each waste stream. These values, along with calculated raw waste concentrations, are presented in Table X-20. The raw waste values were calculated using one of three methods. When analytical concentration data (mg/l) and sampled production normalized flow values (l/kkg) were available for a given waste stream, individual raw waste values for each sample were calculated and averaged. This method allows for the retention of any relationship between concentration, flow, and production. When sampled production normalized flows were not available for a given waste stream, an average concentration was calculated for each pollutant, and the average raw waste normalized flow taken

from the dcp information for that waste stream was used to calculate the raw waste. When no analytical values were available for a given waste stream, the raw waste values for a stream of similar water quality was used. The raw waste concentrations (mg/l) in Table X-20 were calculated by dividing the raw waste values (mg/kkg) by the average raw waste production normalized flow (l/kkg).

The total flow (l/yr) for each option for each subcategory was calculated by summing individual flow values for each waste stream in the subcategory for each option. The individual flow values were calculated by multiplying the total production associated with each waste stream in each subcategory (kkg/yr) by the appropriate production normalized flow (l/kkg) for each waste stream for each option.

The raw waste mass values (kg/yr) for each pollutant in each subcategory were calculated by summing individual raw waste masses for each waste stream in the subcategory. The individual raw waste mass values were calculated by multiplying the total production associated with each waste stream in each subcategory (kkg/yr) by the raw waste value (mg/kkg) for each pollutant in each waste stream.

The mass discharged (kg/yr) for each pollutant for each option for each subcategory was calculated by multiplying the total flow (l/yr) for those waste streams which enter the central treatment system, by the treatment effectiveness concentration (mg/l) (Table VII-21, p. 748) for each pollutant for the appropriate option.

The total mass removed (kg/yr) for each pollutant for each option for each subcategory was calculated by subtracting the total mass discharged (kg/yr) from the total raw mass (kg/yr).

Total treatment performance values for each subcategory were calculated by using the total production (kkg/yr) of all plants in the subcategory for each waste stream. Treatment performance values for direct dischargers in each subcategory were calculated by using the total production (kkg/yr) of all direct dischargers in the subcategory for each waste stream. Treatment performance values for "normal plants" in each subcategory were calculated by dividing the total treatment performance values for the subcategory by the number of plants in that subcategory.

Selected Option for BAT

The Agency evaluated the compliance costs and benefits presented in Tables X-1 through X-19 to select a final option as BAT. All of the options (2 through 6) provided additional pollutant reduction beyond that provided by BPT.

EPA has selected Option 2 as the basis for proposed BAT effluent limitations. This option was selected because it provides protection of the environment consistent with proven operation of in-process controls and treatment effectiveness. The reduction of pollutants in the effluent, especially toxic metals, is substantial and economically achievable thus resulting in a minimal impact on the industry.

Option 2 builds upon the technologies established for BPT. Flow reduction measures are the principal mechanisms for reducing pollutant discharges at Option 2. Flow reduction measures result in eliminating some wastewater streams and concentrating the pollutants in others. Treatment of a more concentrated stream allows a greater net removal of pollutants and may reduce the cost of treatment by reducing the flow and hence the size of the treatment equipment.

All of the flow reduction technologies or control methods are presently employed in at least one aluminum forming plant. The application of technologies such as countercurrent cascade rinsing to cleaning or etching lines is not expected to cause serious interruptions in production since these operations tend to be used intermittently allowing process changes to be scheduled.

Option 3 includes the addition of a polishing filter, which is known to be in use at one aluminum forming plant, to Option 2. Considering the amount of pollutants that filtration can remove from aluminum forming wastewaters, EPA is continuing to consider the possible requirement of filtration. The incremental mass of toxic pollutants removed by going from Option 2 to Option 3 is 4,200 kg/yr for the entire category, the removals from the individual subcategories are shown on Tables X-3 through X-8. Filters are estimated to cost the category $7.3 million in capital and $2.0 million annually. Although Option 2 has been selected as the basis for BAT at proposal the Agency may elect to promulgate BAT on the basis of Option 3.

The Agency decided not to propose BAT based on Options 4 and 5 because of the extremely high cost associated with retrofitting thermal emulsion breaking technology into existing aluminum forming plants, and the small difference in pollutant reduction benefits achieved over either Option 2 or Option 3. In addition, thermal emulsion breaking has high energy requirements and with the rapid escalation of energy costs over the last decade is a relatively high cost technology.

Option 6 is applicable only to the forging subcategory because the forging scrubber liquors may contain significant concentrations of organics from the volatilization of forging lubricants.

Activated carbon was eliminated from consideration early in the decision process due to the high cost associated with its application and the minimal incremental removals achieved.

REGULATED POLLUTANT PARAMETERS

The raw wastewater concentrations from individual operations and the subcategory as a whole were examined to select those pollutant parameters found at frequencies and concentrations warranting regulation. Several toxic metals and aluminum were selected for regulation in each subcategory.

Many of the toxic organic compounds were detected above their level of quantification in wastewaters containing oils or emulsions. Organic compounds are known to be insoluble or slightly soluble in water and highly soluble in oil and, as a result of the normal mixing processes during wastewater treatment, equilibrium distribution of pollutants between the wastewater and oil should occur readily. Then by applying oil removal processes (i.e., oil-water separation or emulsion breaking), the organic pollutant levels are reduced.

The laboratory procedure of extracting a compound from organic and aqueous phases is analogous to the removal of nonpolar organic pollutants by oil skimming during wastewater treatment. Work on extraction of toxic organic pollutants, using the hydrocarbon solvent hexane, has demonstrated extractions ranging from 88 to 97 percent for polynuclear aromatic hydrocarbons when using a one-part hexane to 100-parts wastewater matrix. Addition of ionizable inorganic compounds enhances the extraction of pollutants by hexane. Equilibrium distribution of the pollutants is achieved by two minutes of shaking.

Extraction of pollutants by oil removal treatment processes varies in effectiveness with the relative solubilities of the pollutant. The chemical nature of the process produces a pollutant concentration in the effluent (water), which is a function of the influent (oil and water) concentration of the pollutant. In some cases, the water resulting from the oil treatment process contains organics at concentration levels which are treatable by GAC.

For aluminum forming wastewaters, effective oil removal technology (such as oil skimming or emulsion breaking) is capable of removing approximately 97 percent of the total toxic organics (TTO) from the raw waste. As shown in Table X-21, the achievable TTO concentration is approximately 0.690 mg/l. The influent and

effluent concentrations presented for each pollutant were taken from the data presented in Section V for several plants with effective oil removal technologies in place. In calculating the concentrations, if only one day's sampling datum was available, that value was used; if two day's sampling data were available, the higher of the values was used; and, if three day's sampling data were available, the mean or the median value was used, whichever was higher. The Agency assumes that the 0.690 mg/l value is an appropriate basis for effluent limitations, since the highest values were used in the calculation.

In addition to the pollutants listed in Table X-21, several other toxic organic pollutants are considered. These include p-chloro-m-cresol (022), 2-chlorophenol (024), 2,4-dinitrotoluene (035), 1,2-diphenylhydrazine (037), fluoranthene (039), isophorone (054), benzo(a)pyrene (072), 3,4-benzofluoranthene (074), benzo(k)fluoroanthene (075), chrysene (076), acenaphthylene (077), benzo(ghi)perylene (079), dibenzo(a,h)anthracene (082), indeno(1,2,3-c,d)pyrene (083), vinyl chloride (088), and endrin aldehyde (099). This list includes all the polynuclear aromatic hydrocarbon (PAH) compounds and several toxic organics found in drawing spent emulsions not found in rolling spent emulsions. These compounds are included because the Agency believes that any of the PAH's and these other compounds can be substituted for one another to serve as pressure building compounds in the formulations of the emulsified lubricants.

The total toxic organic benefit estimate values (kg/yr) presented in Tables X-3 through X-19 are calculated by multiplying the oil and grease mass (kg/yr) by 0.0015. From the data presented in Section V, it has been determined that the sum of the concentrations of the toxic organics in any given sample is on the average equal to 0.15 percent of the oil and grease concentration in that sample.

Since effective oil and grease removal can remove 97 percent of the TTO, no TTO limitation will be set at BAT because the Agency believes that the oil and grease removals under the BPT limitations should provide adequate removal of toxic organics.

As discussed in Section VII (p. 609), maintaining the correct pH in the treatment system is important to assure adequate removal of toxic metals. The Agency believes that by maintaining the correct pH range for removal of chromium, zinc, and aluminum, adequate removal of the other toxic metals, cadmium, copper, lead, nickel, and selenium, should be assured. The Agency believes that the mechanism and the chemistry of toxic metals removal in a chemical precipitation and sedimentation (lime and settle) system are the same for all of the toxic metals. This theoretical analysis is supported empirically by performance data

of lime and settle systems collected by the Agency. The theoretical background for toxic metals removal as well as the performance data have been presented in Section VII (p. 631 and p.748 , respectively). Since chromium, zinc, and aluminum are present at the highest concentrations in raw wastewater streams, these pollutants have been selected to be used to ensure adequate removal of the other toxic metals listed above.

Effluent pH should be maintained within the range of 7.5 to 10.0 at all times. This pH range applies to the clarifier effluent and is specified to ensure optimal removal of the vast majority of the toxic metals. The Agency recognizes that this effluent may be subsequently commingled with other nonscope waste streams (i.e., noncontact cooling water) which might effectively lower the pH to below 7.5. This may be accounted for in individual NPDES permits.

ROLLING WITH NEAT OILS SUBCATEGORY

Discharge Flows

Table X-22 lists the BAT wastewater discharge flows for core and ancillary streams that received an allowance under BPT. The flow allowances for BAT for core operations are identical to those of BPT.

Ancillary streams with a BAT discharge allowance are from continuous sheet casting, solution heat treatment contact cooling, and cleaning or etching rinses and scrubbers.

The BAT wastewater discharge flow for the solution heat treatment contact cooling water (heat treatment quench) stream is 2,037 l/kkg (488.5 gal/ton). Of the 89 heat treatment quench operations surveyed, 18 reported recycle of this stream. Eight of these appear to achieve zero discharge of this wastewater stream by practicing total recycle. It is likely, however, that the plants reporting no discharge failed to mention periodic discharge, such as occasional blowdown or discharge with annual cleaning of the cooling tower. Because no technology for avoiding the buildup of solids in completely recycled cooling water is known to be applied in this industry, only nonzero discharge values were used as a basis for the BAT discharge flow. The BAT discharge flow for the solution heat treatment contact cooling water stream is the mean of four plants using recycle for which sufficient data are available on both normalized discharge flow and water use flow (i.e., the percent recycle). The normalized discharge flows for these plants ranged from 881 to 3,059 l/kkg (211 to 733 gal/ton), with a mean of 2,037 l/kkg (488.5 gal/ton), which is selected as the BAT discharge flow.

The BAT wastewater discharge flows for cleaning or etching operations are 1,686 l/kkg (404.4 gal/ton) for cleaning or etching rinses and 1,933 l/kkg (463.5 gal/ton) of aluminum etched for cleaning or etching scrubber liquor. No BAT discharge allowance is given to the cleaning or etching bath based upon hauling or regeneration of bath solutions, as discussed in the Option 2 description.

The BAT wastewater discharge flow for the cleaning or etching rinse is based upon flow reduction using two-stage countercurrent cascade rinsing or other suitable rinsing techniques. As shown in a theoretical calculation presented in Section VII (p. 681), the reduction in the flow that is achievable with two-stage countercurrent cascade rinsing can be 99.5 percent. For the aluminum forming category the BAT flow allowance will be based on 90 percent recycle. The allowance is per bath and related rinse operation; therefore, plants which have more than one cleaning or etching bath are given an allowance for the rinse that follows each. Fourteen of the 26 plants throughout all of the subcategories meet the BAT flow without further flow reduction. Eleven of these 14 plants use recirculating or spray rinsing techniques or a combination of the two. Hot water rinses or treatment of recirculating rinse water are used by four of the 11 plants. Stagnant rinsing is used by three plants which meet the BAT discharge flow, as well as two which do not.

Most of the plants with discharge flows higher than the BAT allowance are forging plants. Five utilize once-through overflow rinsing, two use stagnant rinsing, and two reuse rinse water from one rinse operation for another. Two-stage countercurrent cascade rinsing is used by one plant which could meet the BAT discharge flow by adding a third countercurrent cascade rinsing stage combined with a slight reduction in the rinse ratio. By using two-stage countercurrent cascade rinsing, with an expected 90 percent reduction in rinse water use, 20 of 26 plants can meet the BAT discharge flow. The other six plants would need to add additional countercurrent cascade rinsing stages, reduce their rinse ratio, or use other more efficient rinsing techniques to conserve water.

Two of the four plants with wet air pollution control devices on cleaning or etching operations use water recycle. Again, the BAT wastewater discharge flow for the cleaning or etching scrubber liquor stream is 1,933 l/kkg (463.5 gal/ton), which is based on the mean normalized discharge flow of the plants using recycle.

The BAT discharge for continuous sheet casting spent lubricants is identical to that of BPT [1.843 l/kkg (0.442 gpt)]. This is based upon recycle of this stream.

Pollutants

The pollutants considered for regulation under BAT are listed in Section VI, along with an explanation of why they have been selected. The pollutants selected for regulation under BAT are chromium (total), cyanide (total), zinc, and aluminum. The organic pollutants, cadmium, copper, lead, nickel, and selenium, listed in Section VI are not regulated under BAT. As discussed previously, oil removal and the limitation placed on oil and grease should result in reduction in the amount of organic pollutants which are discharged, and by achieving the zinc and chromium limitations, the other metals listed above should also be removed.

Treatment Train

EPA has selected Option 2 as the basis for BAT in this subcategory. Again, this option uses the same technology as BPT, with the addition of measures to reduce or eliminate the flows from selected waste streams. The end-of-pipe treatment configuration is shown in Figure X-2. The combination of in-process control and technology significantly increases the removals of pollutants over that achieved by BPT and at a reasonable cost.

Effluent Limitations

Table VII-21 (p. 748) presents the treatment effectiveness corresponding to the BAT treatment train for pollutant parameters considered in the Rolling with Neat Oils Subcategory. Effluent concentrations (one day maximum and ten day average values) are multiplied by the normalized discharge flows summarized in Table X-22 to calculate the mass of pollutants allowed to be discharged per mass of product. The results of these calculations are shown in Table X-23.

Benefits

In establishing BAT, EPA considered the cost of treatment and control and the pollutant reduction benefits to evaluate economic achievability. As shown in Table X-3 the application of BAT to the total subcategory will remove approximately 1,790,870.2 kg/yr of pollutants. As shown in Table X-1 the corresponding capital and annual costs (first quarter 1978 dollars) for this removal are $12,036,500 and $6,105,800 per year, respectively. As shown in Table X-9 the application of BAT to direct dischargers only, will remove approximately 1,511,558.8 kg/yr of pollutants. As shown in Table X-2 the corresponding capital and annual costs (first quarter 1978 dollars) for this removal are $9,263,400 and $4,610,500 per year, respectively.

ROLLING WITH EMULSIONS SUBCATEGORY

Discharge Flows

Table X-24 lists the BAT wastewater discharge flows for core and ancillary streams that received an allowance under BPT. The flow allowances for the core operations are identical to BPT.

Ancillary streams with a BAT discharge allowance are from solution heat treatment contact cooling, cleaning or etching rinses and scrubbers, and direct chill casting contact cooling. The BAT wastewater discharge flow for the solution treatment contact cooling water stream is 2,037 l/kkg (488.5 gal/ton), as discussed for the Rolling with Neat Oils Subcategory of this section. The BAT wastewater discharge flows for cleaning or etching operations are 1,686 l/kkg (404.4 gal/ton) for the cleaning or etching rinse and 1,933 l/kkg (463.5 gal/ton) for cleaning or etching scrubber liquor. No BAT discharge allowance is given to the cleaning or etching bath based upon hauling or regeneration of the bath solutions. Refer to the discussion for the Rolling with Neat Oils Subcategory of this section.

The BAT wastewater discharge flow for direct chill casting operations is 1,999 l/kkg (479.4 gal/ton). This is the same as the BPT discharge flow and is based upon the average of plants that recycle this stream.

Pollutants

The pollutants considered for regulation under BAT are listed in Section VI, along with an explanation of why they have been selected. The pollutants selected for regulation under BAT are chromium (total), cyanide (total), zinc, and aluminum. The organic pollutants, cadmium, copper, lead, nickel, and selenium, listed in Section VI are not regulated under BAT. As discussed previously, oil removal and the limitation placed on oil and grease should result in reduction in the amount of organic pollutants which are discharged, and by achieving the zinc and chromium limitations, the other metals listed above should also be removed.

Treatment Train

EPA has selected Option 2 as the basis for BAT in this subcategory. Again, this option uses the same technology as BPT, with the addition of measures to reduce or eliminate the flows from selected waste streams. The end-of-pipe treatment configuration is shown in Figure X-2. The combination of in-process control and technology significantly increases the removals of pollutants over that achieved by BPT and at a reasonable cost.

Effluent Limitations

Table VII-21 (p. 748) presents the treatment effectiveness corresponding to the BAT treatment train for pollutant parameters considered in the Rolling with Emulsions Subcategory. Effluent concentrations (one day maximum and ten day average values) are multiplied by the normalized discharge flows summarized in Table X-24 to calculate the mass of pollutants allowed to be discharged per mass of product. The results of these calculations are shown in Table X-25.

Benefits

In establishing BAT, EPA considered the cost of treatment and control and the pollutant reduction benefits to evaluate economic achievability. As shown in Table X-4 the application of BAT to the total subcategory will remove approximately 12,338,901.1 kg/yr of pollutants. As shown in Table X-1 the corresponding capital and annual costs (first quarter 1978 dollars) for this removal are $12,377,200 and $6,256,000 per year, respectively. As shown in Table X-10 the application of BAT to direct dischargers only, will remove approximately 10,762,880.8 kg/yr of pollutants. As shown in Table X-2 the corresponding capital and annual costs (first quarter 1978 dollars) for this removal are $11,316,200 and $5,975,000 per year, respectively.

EXTRUSION SUBCATEGORY

Discharge Flows

Table X-26 lists the BAT wastewater discharge flows for core and ancillary streams that received an allowance under BPT. The core allocation for BAT is less than BPT due to flow reduction applied to the die cleaning waste streams. Flow reduction is accomplished by countercurrent cascade rinsing applied to the die cleaning rinse stream.

The BAT wastewater discharge flow for the die cleaning bath and rinse stream is 14.78 l/kkg (3.544 gal/ton). This normalized discharge flow is based upon zero allowance for the die cleaning rinse using flow reduction by countercurrent cascade rinsing and total reuse of the reduced rinse flow as make-up to the die cleaning bath. The allowance for the die cleaning bath contribution is the same as the die cleaning bath BPT allowance. Three plants currently practice total reuse of die cleaning rinse water from bath make-up. Because the average amount of die cleaning rinse discharge, 26.52 l/kkg (6.354 gal/ton), is greater than the average die cleaning bath water use, 17.58 l/kkg (4.212 gal/ton), rinse water flow reduction may be required at BAT. Countercurrent cascade rinsing is the suggested technology to achieve the flow reduction.

The BAT wastewater discharge flow for the die cleaning scrubber liquor stream is 275.5 l/kkg (66.08 gal/ton), which is the same as the BPT flow. The BAT discharge flow for the miscellaneous nondescript wastewater sources stream is 3.0 l/kkg (0.719 gal/ton).

Ancillary streams with a BAT discharge allowance are from solution and press heat treatment, direct chill casting contact cooling, and cleaning or etching rinses and scrubbers.

The BAT wastewater discharge flow for the solution and press heat treatment contact cooling water stream is 2,037 l/kkg (488.5 gal/ton), as discussed in the Rolling with Neat Oils Subcategory of this section.

The BAT wastewater discharge flows for cleaning or etching operations are 1,686 l/kkg (404.9 gal/ton) for cleaning or etching rinses and 1,933 l/kkg (463.5 gal/ton) for cleaning or etching scrubber liquor. Refer to the discussion for the Rolling with Neat Oils Subcategory of this section. No BAT discharge allowance is given to the cleaning or etching bath based upon hauling or regeneration of the bath solutions, as discussed in the Rolling with Neat Oils Subcategory of this section.

The BAT wastewater discharge flow for direct chill casting contact cooling is 1,999 l/kkg (479.4 gal/ton). This is the same as the BPT discharge flow and is based upon the average of plants that recycle this stream.

The degassing scrubber liquor stream is zero allowance at BAT. Application of the alternative fluxing and in-line refining methods discussed in Section VII (p. 687), eliminate the need for wet air pollution controls associated with degassing of aluminum melts prior to casting. Because this technology is currently available and in use at most aluminum forming plants with casting operations, dry air pollution control has been identified as the BAT control.

Pollutants

The pollutants considered for regulation under BAT are listed in Section VI, along with an explanation of why they have been selected. The pollutants selected for regulation under BAT are chromium (total), cyanide (total), zinc, and aluminum. The organic pollutants, cadmium, copper, lead, nickel, and selenium, listed in Section VI are not regulated under BAT. As discussed previously, oil removal and the limitation placed on oil and grease should result in reduction in the amount of organic pollutants which are discharged, and by achieving the zinc and chromium limitations, the other metals listed above should also be removed.

Treatment Train

EPA has selected Option 2 as the basis for BAT in this subcategory. Again, this option uses the same technology as BPT, with the addition of measures to reduce or eliminate the flows from selected waste streams. The end-of-pipe treatment configuration is shown in Figure X-2. The combination of in-process control and technology significantly increases the removals of pollutants over that achieved by BPT and at a reasonable cost.

Effluent Limitations

Table VII-21 (p. 748) presents the treatment effectiveness corresponding to the BAT treatment train for pollutant parameters considered in the Extrusion Subcategory. Effluent concentrations (one day maximum and ten day average values) are multiplied by the normalized discharge flows summarized in Table X-26 to calculate the mass of pollutants allowed to be discharged per mass of product. The results of these calculations are shown in Table X-27.

Benefits

In establishing BAT, EPA considered the cost of treatment and control and the pollutant reduction benefits to evaluate economic achievability. As shown in Table X-5 the application of BAT to the total subcategory will remove approximately 4,784,401.0 kg/yr of pollutants. As shown in Table X-1 the corresponding capital and annual costs (first quarter 1978 dollars) for this removal are $24,919,800 and $11,275,700 per year, respectively. As shown in Table X-11 the application of BAT to direct dischargers only, will remove approximately 2,935,838.2 kg/yr of pollutants. As shown in Table X-2 the corresponding capital and annual costs (first quarter 1978 dollars) for this removal are $13,236,800 and $5,731,100 per year, respectively.

FORGING SUBCATEGORY

There are no direct discharging facilities which use forging processes to form aluminum. Consequently, the Agency is excluding the Forging Subcategory from regulation under BPT and BAT. The discussion which follows is presented for consistency and completeness.

Discharge Flows

Table X-28 lists the BAT wastewater discharge flows for core and ancillary streams that received an allowance under BPT. The production normalized discharge flow for the core under BAT is equal to the core discharge flow under BPT.

Ancillary streams with a BAT discharge allowance are from forging scrubbers, solution heat treatment contact cooling, and cleaning or etching rinses and scrubbers. The BAT wastewater discharge flow for the forging scrubber liquor stream is 94.31 l/kkg (22.65 gal/ton). Three aluminum forming plants with dry air pollution control systems use baghouses or afterburners. Because of high operating and maintenance costs and fire hazards associated with the baghouses, dry air pollution control systems have not been selected for BAT. Of the three plants using wet scrubbers, two recirculate the scrubber water with periodic discharge, while one plant does not recirculate and discharges continuously. The BAT discharge flow is the average of the flows for the two plants with recirculating scrubbers.

The BAT wastewater discharge flow for the solution heat treatment contact cooling water stream is 2,037 l/kkg (488.5 gal/ton), as discussed in the Rolling with Neat Oils Subcategory of this section.

The BAT wastewater discharge flows for cleaning or etching operations are 1,686 l/kkg (404.4 gal/ton) for the cleaning or etching rinse and 1,933 l/kkg (463.5 gal/ton) for cleaning or etching scrubber liquor. No BAT discharge allowance is given to the cleaning or etching bath based upon hauling or regeneration of bath solution. Refer to the discussion for the Rolling with Neat Oils Subcategory of this section.

Pollutants

The pollutants considered for regulation under BAT are listed in Section VI, along with an explanation of why they have been selected. The pollutants selected for regulation under BAT are chromium (total), cyanide (total), zinc, and aluminum. The organic pollutants, cadmium, copper, lead, nickel, and selenium, listed in Section VI are not regulated under BAT. As previously discussed, oil removal and the limitation placed on oil and grease should result in reduction in the amount of organic pollutants which are discharged, and by achieving the zinc and chromium limitations, the other metals listed above should also be removed.

Treatment Train

EPA has selected Option 2 as the basis for BAT in this subcategory. Again, this option uses the same technology as BPT, with the addition of measures to reduce or eliminate the flows from selected waste streams. The end-of-pipe treatment configuration is shown in Figure X-2. The combination of in-process control and technology significantly increases the removals of pollutants over that achieved by BPT and at a reasonable cost.

EPA considered applying Option 6 in this subcategory to control toxic organics. The Option 6 treatment train consists of Option 5, with the addition of skimming and granulated activated carbon (GAC) technologies for the forging air pollution control scrubber stream (see Figure X-6). The GAC effluent is directed to the lime and settle process.

As an alternative to Option 6, granular carbon filtration, EPA evaluated oil and grease as a means of providing satisfactory control of the toxic organics. As discussed earlier in this section, the Agency has decided to select an oil and grease limitation based upon BPT in order to control the oil-soluble organics found in aluminum forming wastewaters. Rather than setting specific numeric limitations for toxic organic pollutants, significant control is expected to be achieved by control of oil and grease. Option 6 was rejected because it did not present a reduction in the toxic organic levels significant enough to warrant the increased costs.

Effluent Limitations

Table VII-21 (p. 748) presents the treatment effectiveness corresponding to the BAT treatment train for pollutant parameters considered in the Forging Subcategory. Effluent concentrations (one day maximum and ten day average values) are multiplied by the normalized discharge flows summarized in Table X-28 to calculate the mass of pollutants allowed to be discharged per mass of product. The results of these calculations are shown in Table X-29.

Benefits

In establishing BAT, EPA considered the cost of treatment and control and the pollutant reduction benefits to evaluate economic achievability. As shown in Table X-6 the application of BAT to the total subcategory will remove approximately 794,745.9 kg/yr of pollutants. As shown in Table X-1 the corresponding capital and annual costs (first quarter 1978 dollars) for this removal are $3,619,100 and $1,732,600 per year, respectively.

DRAWING WITH NEAT OILS SUBCATEGORY

Discharge Flows

Table X-30 lists the BAT wastewater discharge flows for core and ancillary streams that received an allowance under BPT. The BAT discharge flow from the core is the same as the BPT discharge flow.

Ancillary streams with a BAT discharge allowance are from continuous rod casting, solution heat treatment contact cooling, and cleaning or etching rinses and scrubbers.

The continuous rod casting contact cooling stream is reduced under BAT to 104.3 l/kkg (25.00 gal/ton) of aluminum cast, with the application of recycle. This discharge flow is a reduction of the BPT discharge flow based upon recycle. One aluminum forming plant reported recycle with only periodic discharge of the continuous rod casting cooling stream. Seventeen aluminum forming plants and nine primary aluminum forming plants, which recycle a similar type of cooling stream from direct chill casting, reported recycle rates of 92 to nearly 100 percent. Therefore, the Agency believes that reducing the flow based on the application of recycle is appropriate for this waste stream.

The BAT wastewater discharge flow for the solution heat treatment contact cooling water stream is 2,037 l/kkg (488.5 gal/ton), as discussed in the Rolling with Neat Oils Subcategory of this section.

The BAT wastewater discharge flows for cleaning or etching operations are 1,686 l/kkg (404.4 gal/ton) for the cleaning or etching rinse and 1,933 l/kkg (463.5 gal/ton) for the cleaning or etching scrubber liquor. No BAT discharge allowance is given to the cleaning or etching bath based upon hauling or regeneration of bath solution. Refer to the discussion for the Rolling with Neat Oils Subcategory of this section.

Pollutants

The pollutants considered for regulation under BAT are listed in Section VI, along with an explanation of why they have been selected. The pollutants selected for regulation under BAT are chromium (total), cyanide (total), zinc, and aluminum. The organic pollutants, cadmium, copper, lead, nickel, and selenium, listed in Section VI are not regulated under BAT. As discussed previously, oil removal and the limitation placed on oil and grease should result in reduction in the amount of organic pollutants which are discharged, and by achieving the zinc and chromium limitations, the other metals listed above should also be removed.

Treatment Train

EPA has selected Option 2 as the basis for BAT in this subcategory. Again, this option uses the same technology as BPT, with

the addition of measures to reduce or eliminate the flows from selected waste streams. The end-of-pipe treatment configuration is shown in Figure X-2. The combination of in-process control and technology significantly increases the removals of pollutants over that achieved by BPT and at a reasonable cost.

Effluent Limitations

Table VII-21 (p. 748) presents the treatment effectiveness corresponding to the BAT treatment train for pollutant parameters considered in the Drawing with Neat Oils Subcategory. Effluent concentrations (one day maximum and ten day average values) are multiplied by the normalized discharge flows summarized in Table X-30 to calculate the mass of pollutants allowed to be discharged per mass of product. The results of these calculations are shown in Table X-31.

Benefits

In establishing BAT, EPA considered the cost of treatment and control and the pollutant reduction benefits to evaluate economic achievability. As shown in Table X-7 the application of BAT to the total subcategory will remove approximately 788,995.7 kg/yr of pollutants. As shown in Table X-1 the corresponding capital and annual costs (first quarter 1978 dollars) for this removal are $2,793,800 and $1,291,400 per year, respectively. As shown in Table X-12 the application of BAT to direct dischargers only, will remove approximately 559,481.0 kg/yr of pollutants. As shown in Table X-2 the corresponding capital and annual costs (first quarter 1978 dollars) for this removal are $1,716,200 and $783,600 per year, respectively.

DRAWING WITH EMULSIONS OR SOAPS SUBCATEGORY

Discharge Flows

Table X-32 lists the BAT wastewater discharge flows for core and ancillary streams that received an allowance under BPT. The BAT discharge flow for the core of this subcategory is equal to the BPT discharge flow.

Ancillary streams with a BAT discharge allowance are from continuous rod casting, solution heat treatment contact cooling, and cleaning or etching rinses and scrubbers.

The BAT wastewater discharge flow for the solution heat treatment contact cooling water stream is 2,037 l/kkg (488.5 gal/ton), as discussed in the Rolling with Neat Oils Subcategory of this section.

The BAT wastewater discharge flows for cleaning or etching operations are 1,686 l/kkg (404.4 gal/ton) for the cleaning or etching rinse and 1,933 l/kkg (463.5 gal/ton) for cleaning or etching scrubber liquor. No BAT discharge allowance is given to the cleaning or etching bath based upon hauling or regeneration of bath solution. Refer to the discussion for the Rolling with Neat Oils Subcategory of this section.

Pollutants

The pollutants considered for regulation under BAT are listed in Section VI, along with an explanation of why they have been selected. The pollutants selected for regulation under BAT are chromium (total), cyanide (total), zinc, and aluminum. The organic pollutants, cadmium, copper, lead, nickel, and selenium, listed in Section VI are not regulated under BAT. As discussed previously, oil removal and the limitation placed on oil and grease should result in reduction in the amount of organic pollutants which are discharged, and by achieving the zinc and chromium limitations, the other metals listed above should also be removed.

Treatment Train

EPA has selected Option 2 as the basis for BAT in this subcategory. Again, this option uses the same technology as BPT, with the addition of measures to reduce or eliminate the flows from selected waste streams. The end-of-pipe treatment configuration is shown in Figure X-2. The combination of in-process control and technology significantly increases the removals of pollutants over that achieved by BPT and at a reasonable cost.

Effluent Limitations

Table VII-21 (p. 748) presents the treatment effectiveness corresponding to the BAT treatment train for pollutant parameters considered in the Drawing with Emulsions or Soaps Subcategory. Effluent concentrations (one day maximum and ten day average values) are multiplied by the normalized discharge flows summarized in Table X-32 to calculate the mass of pollutants allowed to be discharged per mass of product. The results of these calculations are shown in Table X-33.

Benefits

In establishing BAT, EPA considered the cost of treatment and control and the pollutant reduction benefits to evaluate economic achievability. As shown in Table X-8 the application of BAT to the total subcategory will remove approximately 140,583.4 kg/yr of pollutants. As shown in Table X-1 the corresponding capital and annual costs (first quarter 1978 dollars) for this removal are $637,400 and $306,400 per year, respectively. As shown in Table X-13 the application of BAT to direct dischargers only, will remove approximately 57,501.6 kg/yr of pollutants. As shown in Table X-2 the corresponding capital and annual costs (first quarter 1978 dollars) for this removal are $305,200 and $133,900 per year, respectively.

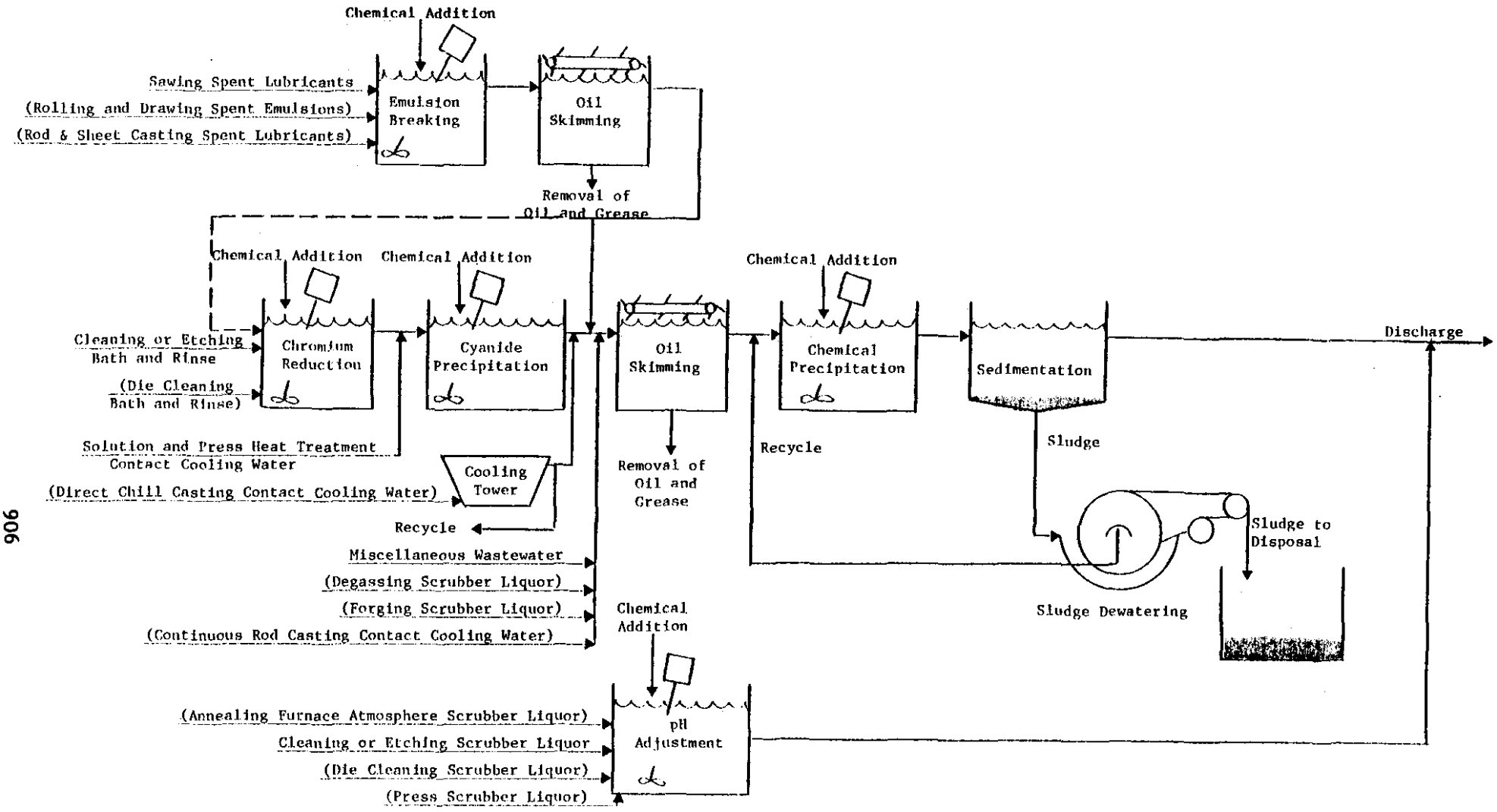

NOTE: ( ) indicates waste streams not associated with all subcategories.

Figure X-1

BAT TREATMENT TRAIN FOR OPTION 1

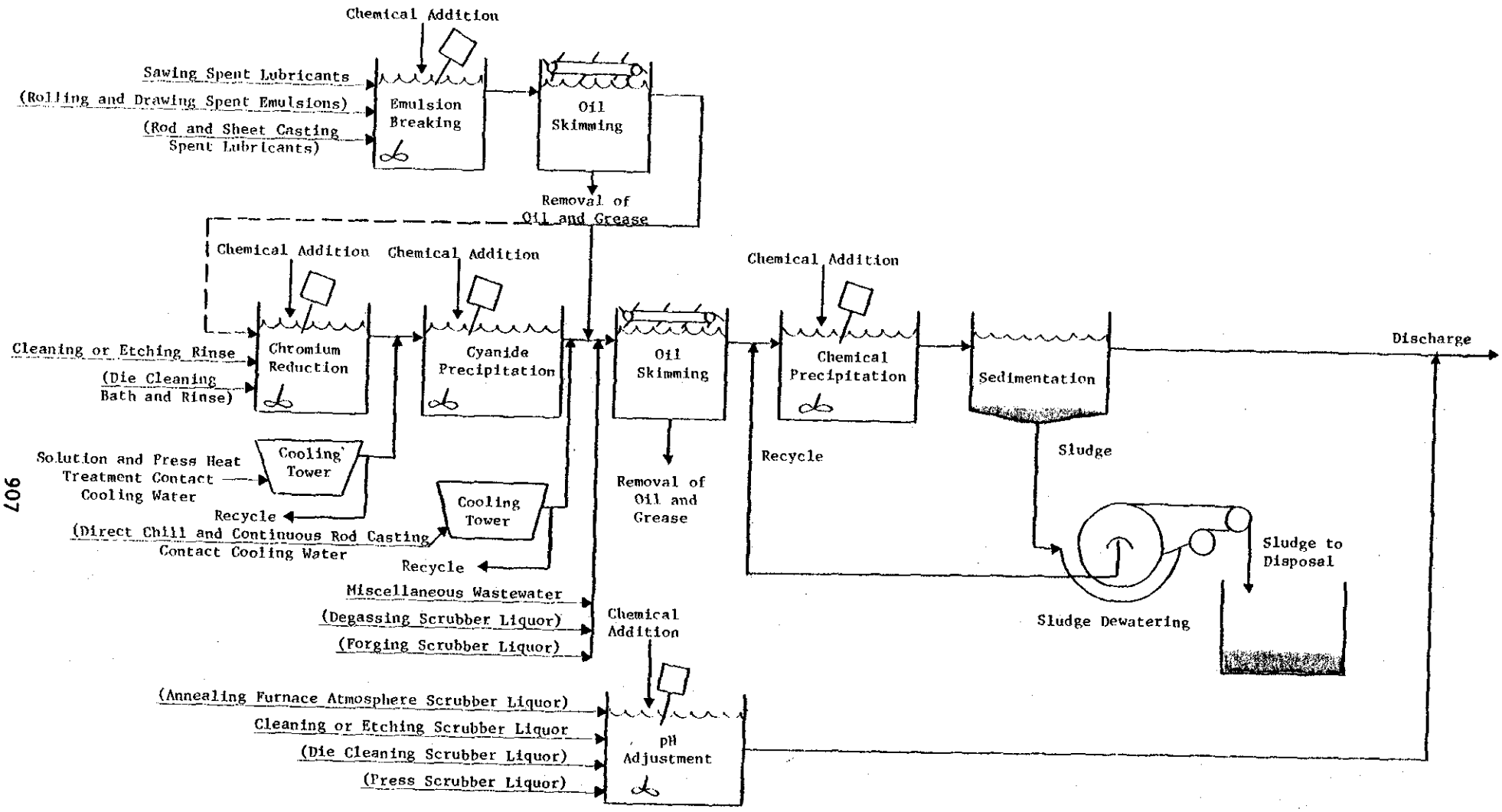

NOTE: ( ) indicates waste streams not associated with all subcategories.

Figure X-2

BAT TREATMENT TRAIN FOR OPTION 2

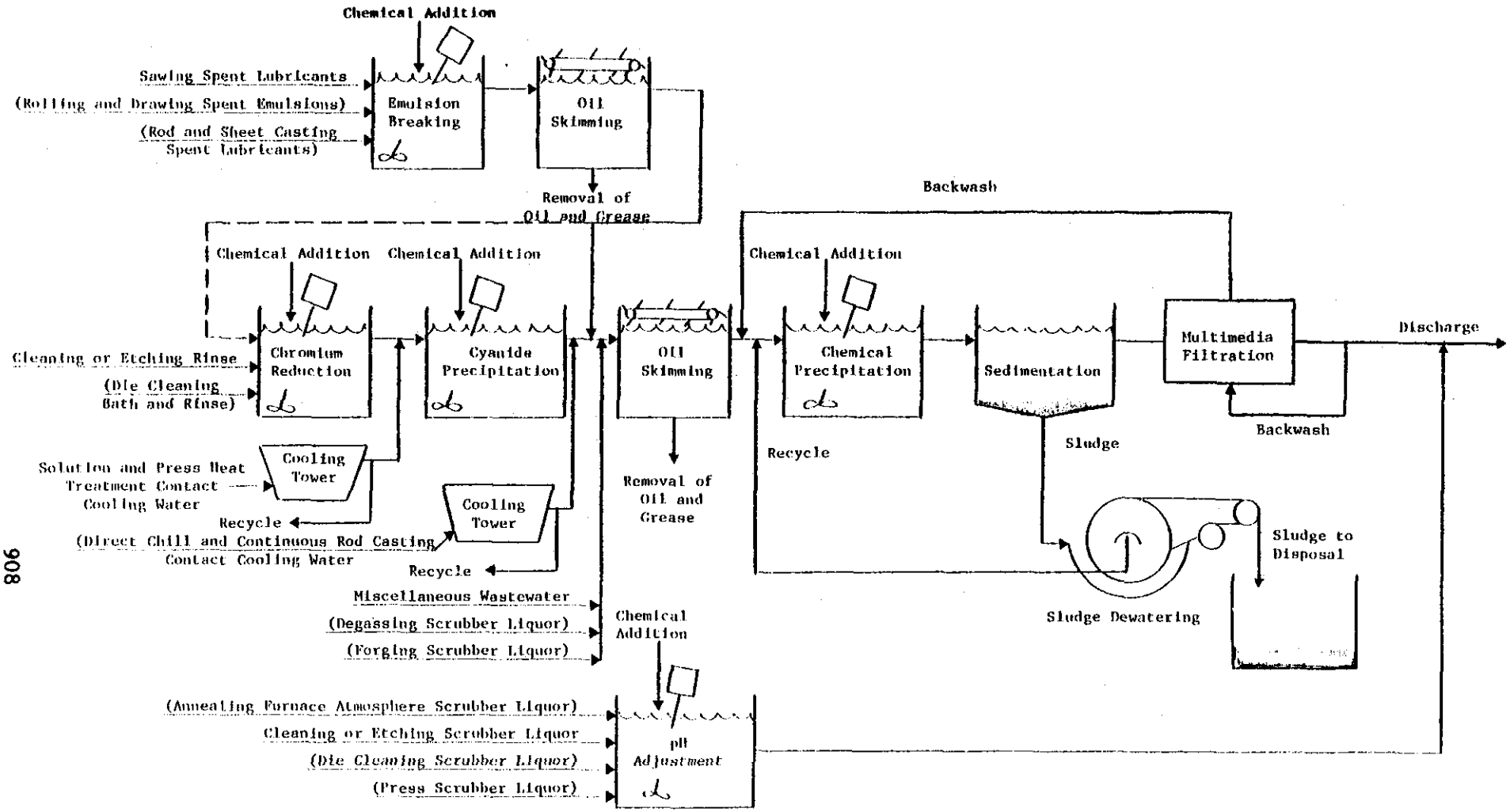

NOTE: ( ) indicates waste streams not associated with all subcategories.

Figure X-3

BAT TREATMENT TRAIN FOR OPTION 3

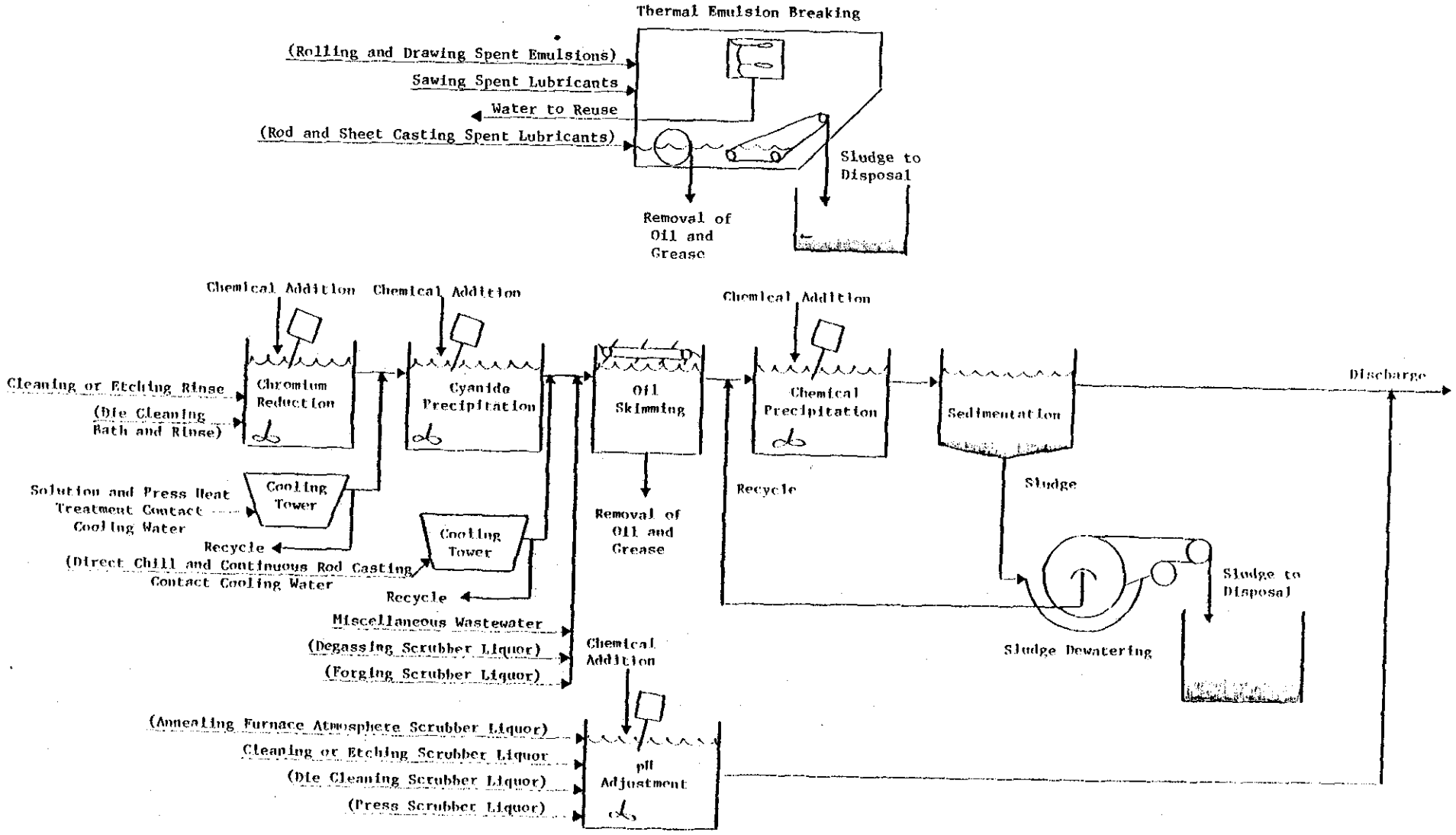

NOTE: ( ) indicates waste streams not associated with all subcategories.

Figure X-4

BAT TREATMENT TRAIN FOR OPTION 4

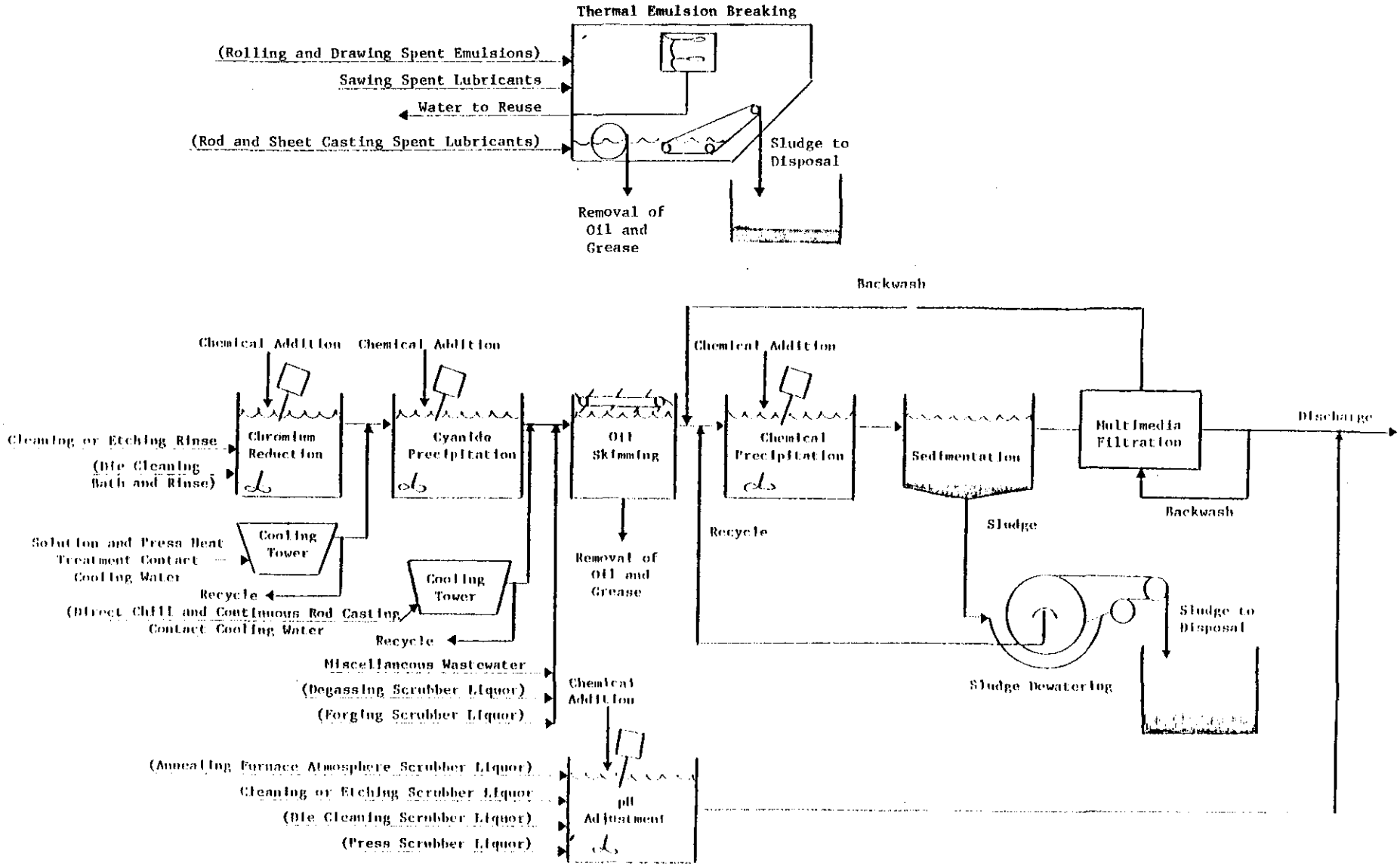

NOTE: ( ) indicates waste streams not associated with all subcategories.

Figure X-5

BAT TREATMENT TRAIN FOR OPTION 5

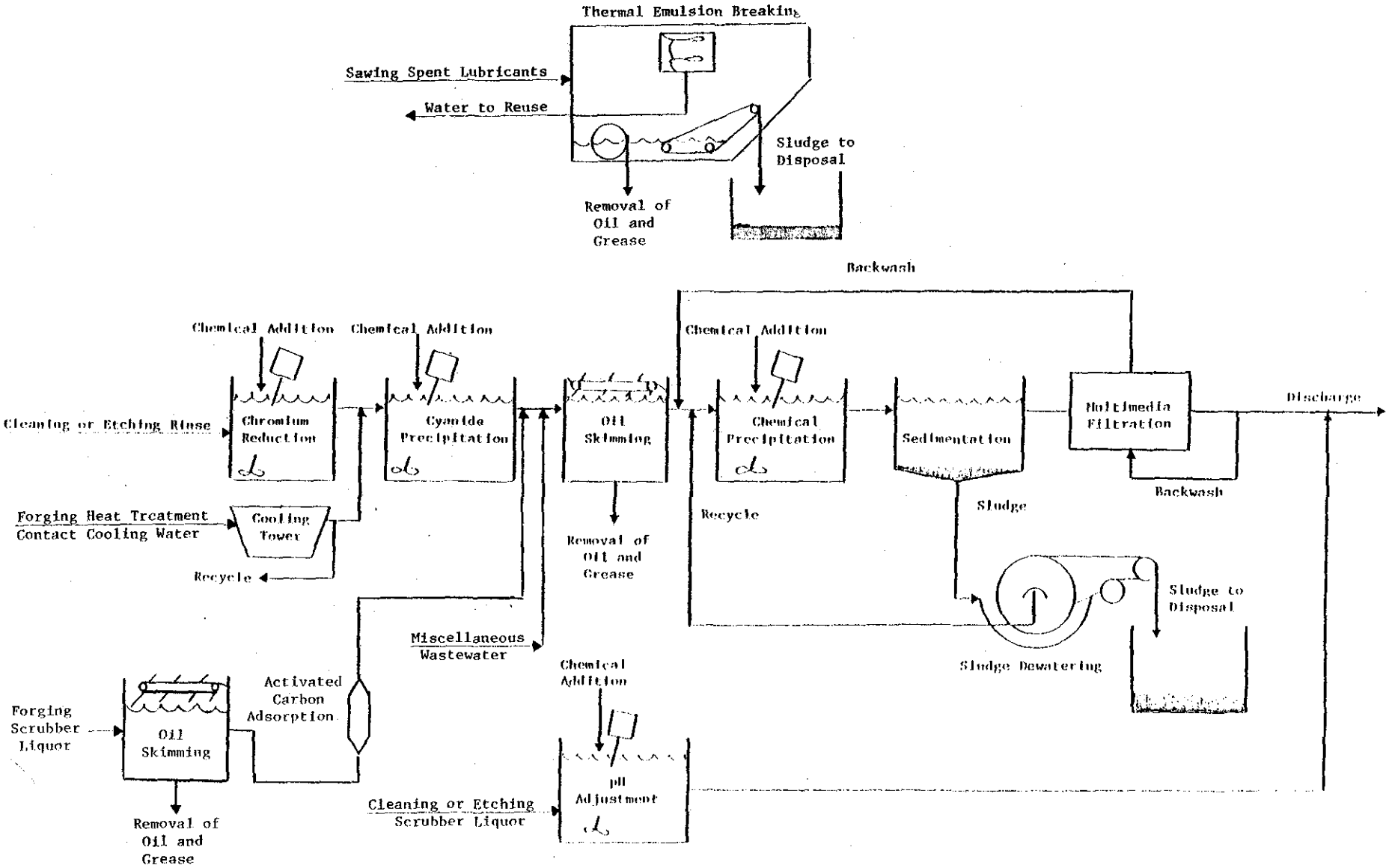

Figure X-6

BAT TREATMENT TRAIN FOR OPTION 6

Table X-1

CAPITAL AND ANNUAL COST ESTIMATES FOR BAT OPTIONS
TOTAL SUBCATEGORY

Subcategory	Option 1	Option 2	Option 3	Option 4	Option 5	Option 6
Rolling With Neat Oils						
Capital	8,537,400	12,036,500	13,958,000	29,302,200	31,263,600	----
Annual	4,907,700	6,105,800	6,580,100	9,897,400	10,267,800	----
Rolling With Emulsions						
Capital	9,230,500	12,377,200	14,516,900	53,634,500	55,796,300	----
Annual	5,421,000	6,256,000	7,051,200	15,646,400	16,121,800	----
Extrusion						
Capital	22,716,300	24,919,800	26,946,700	24,066,200	26,605,700	----
Annual	10,178,400	11,275,700	11,872,100	11,160,700	12,060,300	----
Forging						
Capital	3,420,000	3,619,100	3,961,600	3,563,000	3,905,400	3,937,200
Annual	1,677,400	1,732,600	1,824,200	1,717,500	1,809,300	1,858,900
Drawing With Neat Oils						
Capital	2,691,100	2,793,800	3,030,000	2,895,900	3,381,000	----
Annual	1,280,400	1,291,400	1,355,900	1,315,500	1,495,000	----
Drawing With Emulsions or Soaps						
Capital	637,400	637,400	647,100	837,000	873,700	----
Annual	306,400	306,400	315,700	354,500	363,900	----

Table X-2

CAPITAL AND ANNUAL COST ESTIMATES FOR BAT OPTIONS
DIRECT DISCHARGERS

Subcategory	Option 1	Option 2	Option 3	Option 4	Option 5
Rolling With Neat Oils					
Capital	5,934,200	9,263,400	10,745,700	26,119,400	27,601,600
Annual	3,460,200	4,610,500	4,974,900	8,292,400	8,556,800
Rolling With Emulsions					
Capital	8,297,900	11,316,200	13,302,600	52,408,400	54,390,800
Annual	4,908,400	5,975,000	6,461,900	14,996,900	15,484,200
Extrusion					
Capital	12,044,300	13,236,800	14,306,500	12,688,900	14,226,700
Annual	5,280,100	5,731,100	6,100,900	5,297,700	5,988,500
Drawing With Neat Oils					
Capital	1,707,300	1,716,200	1,867,600	1,874,400	2,274,800
Annual	778,700	783,600	823,800	821,800	977,100
Drawing With Emulsions or Soaps					
Capital	305,200	305,200	330,300	469,700	494,800
Annual	133,900	133,900	140,100	165,700	172,000

Table X-3

TOTAL TREATMENT PERFORMANCE*
ROLLING WITH NEAT OILS SUBCATEGORY

	Pollutant	Raw Waste	Option 1		Option 2	
	Flow (l/yr)	5.176×10^9	5.176×10^9		961.3×10^6	
		(kg/yr)	Removed (kg/yr)	Discharged (kg/yr)	Removed (kg/yr)	Discharged (kg/yr)
118.	Cadmium	15.5	0.0	15.5	0.0	15.5
119.	Chromium	7,061.9	6,775.4	286.5	6,991.0	70.7
120.	Copper	3,003.0	951.0	2,052.0	2,482.8	520.2
121.	Cyanide	37.1	0.0	37.1	0.0	37.1
122.	Lead	1,989.3	1,546.1	443.2	1,869.6	119.7
124.	Nickel	524.6	0.0	524.6	38.7	485.9
128.	Zinc	5,907.2	4,832.9	1,074.3	5,641.7	265.5
	Aluminum	339,867.6	332,440.0	7,427.5	335,432.3	4,435.1
	Oil and Grease	1,087,360.4	1,042,742.8	44,617.6	1,069,700.9	17,659.5
	TSS	385,870.0	334,759.0	51,111.0	367,108.6	18,671.3
	Total Toxic Organics	1,631.0	1,564.1	66.9	1,604.6	26.5
	Total Toxic Metals	18,501.5	14,105.4	4,396.1	17,023.8	1,477.5
	Total Toxics	20,169.6	15,669.5	4,500.1	18,628.4	1,541.1
	Total Conventionals	1,473,230.4	1,377,501.8	95,728.6	1,436,809.5	36,420.8
	Total Pollutants	1,833,267.6	1,725,611.3	107,656.2	1,790,870.2	42,397.0
	Sludge	-----	16,383,700		16,791,910	

*The data tabulated represent performance of technology applied to all aluminum forming plants in the subcategory.

Table X-3 (Continued)

TOTAL TREATMENT PERFORMANCE*
ROLLING WITH NEAT OILS SUBCATEGORY

	Pollutant	Option 3		Option 4		Option 5	
	Flow (l/yr)	961.3×10^6		904.3×10^6		904.3×10^6	
		Removed (kg/yr)	Discharged (kg/yr)	Removed (kg/yr)	Discharged (kg/yr)	Removed (kg/yr)	Discharged (kg/yr)
118.	Cadmium	0.0	15.5	0.2	15.4	0.2	15.3
119.	Chromium	6,999.9	62.0	6,995.6	66.3	7,004.0	58.0
120.	Copper	2,651.0	351.9	2,515.9	487.0	2,673.2	329.7
121.	Cyanide	0.0	37.1	0.1	37.1	0.1	37.0
122.	Lead	1,905.0	84.3	1,876.4	112.9	1,909.5	79.8
124.	Nickel	333.4	191.3	63.9	460.7	343.8	180.8
128.	Zinc	5,703.6	203.5	5,658.7	248.5	5,716.7	190.5
	Aluminum	335,759.9	4,107.6	335,495.6	4,371.9	335,802.0	4,065.5
	Oil and Grease	1,069,700.9	17,659.5	1,070,270.6	17,089.8	1,070,270.6	17,089.8
	TSS	375,428.3	10,441.7	367,792.2	18,077.8	375,576.4	10,293.6
	Total Toxic Organics	1,604.6	26.5	1,605.4	25.6	1,605.4	25.6
	Total Toxic Metals	17,592.9	908.5	17,110.7	1,390.8	17,647.4	854.1
	Total Toxics	19,197.5	972.1	18,716.2	1,453.5	19,252.9	916.7
	Total Conventionals	1,445,129.2	28,101.2	1,438,062.8	35,167.6	1,445,847.0	27,383.4
	Total Pollutants	1,800,086.6	33,180.9	1,792,274.6	40,993.0	1,800,901.9	32,365.6
	Sludge	16,855,940		16,801,430		16,861,490	

*The data tabulated represent performance of technology applied to all aluminum forming plants in the subcategory.

Note: Total Toxic Metals - Cadmium + Chromium + Copper + Lead + Nickel + Zinc
Total Toxics - Total Toxic Organics + Total Toxic Metals + Cyanide
Total Conventionals - Oil and Grease + TSS
Total Pollutants - Total Toxics + Total Conventionals + Aluminum

Table X-4

TOTAL TREATMENT PERFORMANCE*
ROLLING WITH EMULSIONS SUBCATEGORY

	Pollutant	Raw Waste	Option 1		Option 2	
	Flow (l/yr)	32.31×10^9	9.935×10^9		8.030×10^9	
		(kg/yr)	Removed (kg/yr)	Discharged (kg/yr)	Removed (kg/yr)	Discharged (kg/yr)
118.	Cadmium	61.0	1.4	59.6	1.4	59.6
119.	Chromium	4,856.7	4,086.5	770.2	4,217.1	639.6
120.	Copper	4,350.9	182.5	4,168.5	205.8	4,145.2
121.	Cyanide	250.1	1.9	248.2	1.9	248.2
122.	Lead	15,147.7	13,986.4	1,161.3	14,182.2	965.5
124.	Nickel	671.7	16.8	654.9	16.8	654.9
128.	Zinc	9,493.0	6,605.2	2,887.9	7,094.6	2,398.5
	Aluminum	279,025.6	266,764.3	12,261.2	268,575.0	10,450.6
	Oil and Grease	7,877,285.4	7,777,001.3	100,284.0	7,793,313.3	83,972.0
	TSS	4,339,260.1	4,220,028.5	119,231.6	4,239,603.0	99,657.2
	Total Toxic Organics	11,815.9	11,665.5	150.4	11,690.0	126.0
	Total Toxic Metals	34,581.0	24,878.8	9,702.4	25,717.9	8,863.3
	Total Toxics	46,647.0	36,546.2	10,101.0	37,409.8	9,237.5
	Total Conventionals	12,216,545.5	11,997,029.8	219,515.6	12,032,916.3	183,629.2
	Total Pollutants	12,216,545.5	12,300,340.3	241,877.8	12,338,901.1	203,317.3
	Sludge	-----	67,766,350		68,004,860	

*The data tabulated represent performance of technology applied to all aluminum forming plants in the subcategory.

Table X-4 (Continued)

TOTAL TREATMENT PERFORMANCE*
ROLLING WITH EMULSIONS SUBCATEGORY

	Pollutant	Option 3		Option 4		Option 5	
	Flow (l/yr)	8.030×10^9		7.673×10^9		7.673×10^9	
		Removed (kg/yr)	Discharged (kg/yr)	Removed (kg/yr)	Discharged (kg/yr)	Removed (kg/yr)	Discharged (kg/yr)
118.	Cadmium	2.2	58.8	3.5	57.5	3.6	57.4
119.	Chromium	4,297.1	559.6	4,245.7	611.0	4,322.0	534.7
120.	Copper	1,229.7	3,121.2	236.4	4,114.5	1,369.1	2,981.9
121.	Cyanide	2.6	247.5	3.8	246.3	3.8	246.2
122.	Lead	14,501.9	645.8	14,225.0	922.7	14,530.5	617.2
124.	Nickel	26.8	645.0	32.5	639.2	32.8	638.9
128.	Zinc	7,654.2	1,838.8	7,201.7	2,291.4	7,736.3	1,756.7
	Aluminum	271,533.1	7,492.4	268,971.5	10,054.1	271,797.6	7,228.0
	Oil and Grease	7,793,313.3	83,972.0	7,796,885.6	80,399.9	7,796,885.6	80,399.9
	TSS	4,314,757.3	24,503.0	4,243,889.7	95,370.4	4,315,686.0	23,574.1
	Total Toxic Organics	11,690.0	126.0	11,695.3	120.6	11,695.3	120.6
	Total Toxic Metals	27,711.9	6,869.2	25,944.8	8,636.3	27,994.3	6,586.8
	Total Toxics	39,404.5	7,242.7	37,643.9	9,003.2	39,693.4	6,953.6
	Total Conventionals	12,108,070.6	108,475.0	12,040,775.3	175,770.3	12,112,571.6	103,974.0
	Total Pollutants	12,419,008.2	123,210.1	12,347,390.7	194,827.6	12,424,062.6	118,155.6
	Sludge	68,482,400		68,057,960		68,515,120	

*The data tabulated represent performance of technology applied to all aluminum forming plants in the subcategory.

Note: Total Toxic Metals - Cadmium + Chromium + Copper + Lead + Nickel + Zinc
Total Toxics - Total Toxic Organics + Total Toxic Metals + Cyanide
Total Conventionals - Oil and Grease + TSS
Total Pollutants - Total Toxics + Total Conventionals + Aluminum

Table X-5

TOTAL TREATMENT PERFORMANCE*
EXTRUSION SUBCATEGORY

	Pollutant	Raw Waste	Option 1		Option 2	
	Flow (l/yr)	20.33×10^9	15.59×10^9		4.522×10^9	
		(kg/yr)	Removed (kg/yr)	Discharged (kg/yr)	Removed (kg/yr)	Discharged (kg/yr)
118.	Cadmium	88.8	0.0	88.8	0.0	88.8
119.	Chromium	146,666.4	145,505.3	1,161.0	146,343.2	323.2
120.	Copper	13,894.6	5,466.4	8,428.2	11,540.7	2,353.9
121.	Cyanide	1,607.2	636.6	970.6	1,331.2	276.0
122.	Lead	4,511.8	2,748.7	1,763.0	4,005.4	506.2
124.	Nickel	6,437.7	470.0	5,967.7	4,134.9	2,302.7
128.	Zinc	19,463.3	15,109.4	4,353.9	18,251.2	1,212.0
	Aluminum	1,983,121.1	1,961,520.3	21,600.9	1,973,145.2	9,975.8
	Oil and Grease	635,094.8	475,981.2	159,113.7	580,710.1	54,384.7
	TSS	2,105,473.8	1,918,393.2	187,080.6	2,044,068.0	61,405.9
	Total Toxic Organics	952.7	714.0	238.7	871.1	81.6
	Total Toxic Metals	191,062.6	169,299.8	21,762.6	184,275.4	6,786.8
	Total Toxics	193,622.5	170,650.4	22,971.9	186,477.7	7,144.4
	Total Conventionals	2,740,568.6	2,394,374.4	346,194.3	2,624,778.1	115,790.6
	Total Pollutants	4,917,312.2	4,526,545.1	390,767.1	4,784,401.0	132,910.8
	Sludge	-----	69,002,630		70,743,780	

*The data tabulated represent performance of technology applied to all aluminum forming plants in the subcategory.

Table X-5 (Continued)

TOTAL TREATMENT PERFORMANCE*
EXTRUSION SUBCATEGORY

	Pollutant	Option 3		Option 4		Option 5	
	Flow (l/yr)	4.522×10^9		4.515×10^9		4.515×10^9	
		Removed (kg/yr)	Discharged (kg/yr)	Removed (kg/yr)	Discharged (kg/yr)	Removed (kg/yr)	Discharged (kg/yr)
118.	Cadmium	1.0	87.9	0.0	88.8	1.1	87.8
119.	Chromium	146,383.7	282.7	146,343.8	322.7	146,384.1	282.3
120.	Copper	12,308.3	1,586.4	11,544.8	2,349.9	12,311.0	1,583.6
121.	Cyanide	1,414.4	192.8	1,331.5	275.6	1,414.7	192.5
122.	Lead	4,167.1	344.7	4,006.3	505.4	4,167.7	344.2
124.	Nickel	5,549.0	888.8	4,139.0	2,298.8	5,550.4	887.3
128.	Zinc	18,534.1	929.2	18,253.4	1,209.9	18,535.7	927.6
	Aluminum	1,974,640.0	8,481.1	1,973,153.0	9,968.1	1,974,645.3	8,475.9
	Oil and Grease	580,710.1	54,384.7	580,781.1	54,313.8	580,781.1	54,313.8
	TSS	2,082,044.0	23,429.8	2,044,153.2	61,320.6	2,082,062.5	23,411.4
	Total Toxic Organics	871.1	81.6	871.2	81.5	871.2	81.5
	Total Toxic Metals	186,943.2	4,119.7	184,287.3	6,775.5	186,950.0	4,112.8
	Total Toxics	189,228.7	4,394.1	186,490.0	7,132.6	189,235.9	4,386.8
	Total Conventionals	2,662,754.1	77,814.5	2,624,934.3	115,634.4	2,662,843.6	77,725.2
	Total Pollutants	4,826,622.8	90,689.7	4,784,577.3	132,735.1	4,826,724.8	90,587.9
	Sludge	71,041,690		70,745,010		71,042,400	

*The data tabulated represent performance of technology applied to all aluminum forming plants in the subcategory.

Note: Total Toxic Metals - Cadmium + Chromium + Copper + Lead + Nickel + Zinc
Total Toxics - Total Toxic Organics + Total Toxic Metals + Cyanide
Total Conventionals - Oil and Grease + TSS
Total Pollutants - Total Toxics + Total Conventionals + Aluminum

Table X-6

TOTAL TREATMENT PERFORMANCE*
FORGING SUBCATEGORY

	Pollutant	Raw Waste	Option 1		Option 2		Option 3	
	Flow (l/yr)	2.201×10^9	2.201×10^9		285.6×10^6		285.6×10^6	
		(kg/yr)	Removed (kg/yr)	Discharged (kg/yr)	Removed (kg/yr)	Discharged (kg/yr)	Removed (kg/yr)	Discharged (kg/yr)
118.	Cadmium	13.1	0.0	13.1	0.0	13.1	4.1	9.0
119.	Chromium	4,335.8	4,231.3	104.4	4,321.0	14.8	4,322.9	12.9
120.	Copper	3,558.4	2,792.4	766.0	3,442.1	116.1	3,477.3	81.1
121.	Cyanide	40.5	0.0	40.5	19.5	21.0	23.7	16.8
122.	Lead	1,575.1	1,400.5	174.6	1,534.9	40.1	1,542.3	32.7
124.	Nickel	592.7	0.0	592.7	487.3	105.4	552.0	40.7
128.	Zinc	7,381.8	6,990.2	391.6	7,326.3	55.5	7,339.3	42.5
	Aluminum	442,413.5	436,392.9	6,020.6	437,636.5	4,777.0	437,704.9	4,708.5
	Oil and Grease	46,220.3	21,503.9	24,716.4	32,707.7	13,512.6	32,707.7	13,512.6
	TSS	320,218.8	293,777.1	26,441.7	307,221.5	12,997.2	308,959.6	11,259.2
	Total Toxic Organics	84.4	32.3	52.2	49.1	35.4	49.1	35.4
	Total Toxic Metals	17,456.9	15,414.4	2,042.4	17,111.6	345.0	17,237.9	218.9
	Total Toxics	17,581.8	15,446.7	2,135.1	17,180.2	401.4	17,310.7	271.1
	Total Conventionals	366,439.1	315,281.0	51,158.1	339,929.2	26,509.8	341,667.3	24,771.8
	Total Pollutants	826,434.4	767,120.6	59,313.8	794,745.9	31,688.2	796,682.9	29,751.4
	Sludge	-----	14,001,910		14,189,570		14,203,250	

*The data tabulated represent performance of technology applied to all aluminum forming plants in the subcategory.

Table X-6 (Continued)

TOTAL TREATMENT PERFORMANCE*
FORGING SUBCATEGORY

	Pollutant	Option 4		Option 5		Option 6	
	Flow (l/yr)	285.3×10^6		285.3×10^6		285.3×10^6	
		Removed (kg/yr)	Discharged (kg/yr)	Removed (kg/yr)	Discharged (kg/yr)	Removed (kg/yr)	Discharged (kg/yr)
118.	Cadmium	0.0	13.1	4.1	9.0	4.1	9.0
119.	Chromium	4,321.0	14.8	4,322.9	12.9	4,322.9	12.9
120.	Copper	3,442.3	116.0	3,477.4	81.0	3,477.4	81.0
121.	Cyanide	19.5	21.0	23.8	16.7	23.8	16.7
122.	Lead	1,535.0	40.1	1,542.4	32.7	1,542.4	32.7
124.	Nickel	487.4	105.3	552.0	40.6	552.0	40.6
128.	Zinc	7,326.4	55.4	7,339.4	42.4	7,339.4	42.4
	Aluminum	437,636.8	4,776.7	437,705.1	4,708.3	437,705.1	4,708.3
	Oil and Grease	32,710.2	13,510.1	32,710.2	13,510.1	32,710.2	13,510.1
	TSS	307,224.6	12,994.2	308,960.2	11,258.6	308,960.2	11,258.6
	Total Toxic Organics	49.1	35.4	49.1	35.4	64.2	20.3
	Total Toxic Metals	17,112.1	344.7	17,238.2	218.6	17,238.2	218.6
	Total Toxics	17,180.7	401.1	17,311.1	270.7	17,326.2	255.6
	Total Conventionals	339,934.8	26,504.3	341,670.4	24,768.7	341,670.4	24,768.7
	Total Pollutants	794,752.3	31,682.1	796,686.6	29,747.7	796,701.7	29,732.6
	Sludge	14,189,620		14,203,280		14,203,280	

*The data tabulated represent performance of technology applied to all aluminum forming plants in the subcategory.

Note: Total Toxic Metals - Cadmium + Chromium + Copper + Lead + Nickel + Zinc
Total Toxics - Total Toxic Organics + Total Toxic Metals + Cyanide
Total Conventionals - Oil and Grease + TSS
Total Pollutants - Total Toxics + Total Conventionals + Aluminum

Table X-7

TOTAL TREATMENT PERFORMANCE*
DRAWING WITH NEAT OILS SUBCATEGORY

	Pollutant	Raw Waste	Option 1		Option 2	
	Flow (1/yr)	2.446×10^9	2.446×10^9		375.1×10^6	
		(kg/yr)	Removed (kg/yr)	Discharged (kg/yr)	Removed (kg/yr)	Discharged (kg/yr)
118.	Cadmium	13.0	0.0	13.0	0.0	13.0
119.	Chromium	8,041.3	7,913.2	128.1	8,018.8	22.4
120.	Copper	3,383.2	2,445.9	937.3	3,212.2	171.0
121.	Cyanide	79.0	32.5	46.5	53.2	25.8
122.	Lead	1,403.2	1,194.1	209.0	1,352.7	50.5
124.	Nickel	569.7	0.0	569.7	410.0	159.8
128.	Zinc	7,089.6	6,609.2	480.5	7,005.5	84.0
	Aluminum	419,098.0	413,012.3	6,085.7	414,479.1	4,619.0
	Oil and Grease	69,120.7	42,114.2	27,006.4	55,327.4	13,793.3
	TSS	312,573.5	283,198.0	29,375.4	299,053.8	13,519.7
	Total Toxic Organics	103.7	63.2	40.5	83.0	20.7
	Total Toxic Metals	20,500.0	18,162.4	2,337.6	19,999.2	500.7
	Total Toxics	20,682.7	18,258.1	2,424.6	20,135.4	547.2
	Total Conventionals	381,694.2	325,312.2	56,381.8	354,381.2	27,313.0
	Total Pollutants	821,474.9	756,582.6	64,892.1	788,995.7	32,479.2
	Sludge	-----	13,422,830		13,642,080	

*The data tabulated represent performance of technology applied to all aluminum forming plants in the subcategory.

Table X-7 (Continued)

TOTAL TREATMENT PERFORMANCE*
DRAWING WITH NEAT OILS SUBCATEGORY

	Pollutant	Option 3		Option 4		Option 5	
	Flow (l/yr)	375.1×10^6		373.6×10^6		373.6×10^6	
		Removed (kg/yr)	Discharged (kg/yr)	Removed (kg/yr)	Discharged (kg/yr)	Removed (kg/yr)	Discharged (kg/yr)
118.	Cadmium	0.4	12.6	0.0	13.0	0.5	12.6
119.	Chromium	8,021.7	19.6	8,019.0	22.3	8,021.7	19.6
120.	Copper	3,265.5	117.7	3,213.1	170.2	3,266.0	117.2
121.	Cyanide	58.5	20.5	53.2	25.8	58.5	20.4
122.	Lead	1,363.9	39.2	1,352.8	50.4	1,364.1	39.2
124.	Nickel	508.0	61.7	410.8	158.9	508.4	61.4
128.	Zinc	7,025.1	64.5	7,005.9	83.7	7,025.4	64.1
	Aluminum	414,582.7	4,515.3	414,480.7	4,617.3	414,583.8	4,514.3
	Oil and Grease	55,327.4	13,793.3	55,342.1	13,778.6	55,342.1	13,778.6
	TSS	301,688.3	10,885.2	299,071.5	13,502.1	301,692.2	10,881.4
	Total Toxic Organics	83.0	20.7	83.0	20.7	83.0	20.7
	Total Toxic Metals	20,184.6	315.3	20,001.6	498.5	20,186.1	314.1
	Total Toxics	20,326.1	356.5	20,137.8	545.0	20,327.6	355.2
	Total Conventionals	357,015.7	24,678.5	354,413.6	27,280.7	357,034.3	24,660.0
	Total Pollutants	791,924.5	29,550.3	789,032.1	32,443.0	791,945.7	29,529.5
	Sludge	13,662,720		13,642,330		13,662,870	

*The data tabulated represent performance of technology applied to all aluminum forming plants in the subcategory.

Note: Total Toxic Metals - Cadmium + Chromium + Copper + Lead + Nickel + Zinc
Total Toxics - Total Toxic Organics + Total Toxic Metals + Cyanide
Total Conventionals - Oil and Grease + TSS
Total Pollutants - Total Toxics + Total Conventionals + Aluminum

Table X-8

TOTAL TREATMENT PERFORMANCE*
DRAWING WITH EMULSIONS OR SOAPS SUBCATEGORY

	Pollutant	Raw Waste	Option 1		Option 2	
	Flow (l/yr)	413.5×10^6	413.5×10^6		110.7×10^6	
		(kg/yr)	Removed (kg/yr)	Discharged (kg/yr)	Removed (kg/yr)	Discharged (kg/yr)
118.	Cadmium	1.2	0.0	1.2	0.0	1.2
119.	Chromium	683.2	653.8	29.4	675.0	8.3
120.	Copper	200.8	121.7	79.1	163.8	37.0
121.	Cyanide	3.2	0.0	3.2	0.0	3.2
122.	Lead	134.0	88.6	45.3	120.3	13.6
124.	Nickel	36.0	0.0	36.0	18.8	17.3
128.	Zinc	390.2	332.1	58.3	358.5	31.8
	Aluminum	21,837.2	21,216.5	620.8	21,498.5	338.8
	Oil and Grease	94,671.5	90,405.7	4,265.8	93,048.6	1,623.0
	TSS	26,352.1	21,388.9	4,963.1	24,560.3	1,791.7
	Total Toxic Organics	142.0	135.6	6.4	139.6	2.4
	Total Toxic Metals	1,445.4	1,196.2	249.3	1,336.4	109.2
	Total Toxic	1,590.6	1,331.8	258.9	1,476.0	114.8
	Total Conventionals	121,023.6	111,794.6	9,228.9	117,608.9	3,414.7
	Total Pollutants	144,451.4	134,342.9	10,108.6	140,583.4	3,868.3
	Sludge	-----	1,168,030		1,206,920	

*The data tabulated represent performance of technology applied to all aluminum forming plants in the subcategory.

Table X-8 (Continued)

TOTAL TREATMENT PERFORMANCE*
DRAWING WITH EMULSIONS OR SOAPS SUBCATEGORY

	Pollutant	Option 3		Option 4		Option 5	
	Flow (l/yr)	110.7×10^6		90.32×10^6		90.32×10^6	
		Removed (kg/yr)	Discharged (kg/yr)	Removed (kg/yr)	Discharged (kg/yr)	Removed (kg/yr)	Discharged (kg/yr)
118.	Cadmium	0.0	1.2	0.1	1.1	0.1	1.1
119.	Chromium	675.9	7.3	676.4	6.8	677.3	5.9
120.	Copper	168.3	32.5	168.9	31.9	172.1	28.7
121.	Cyanide	0.1	3.1	0.0	3.2	0.2	3.0
122.	Lead	124.6	9.4	122.8	11.1	126.3	7.7
124.	Nickel	25.3	10.7	20.4	15.6	26.2	9.8
128.	Zinc	365.9	24.3	364.6	25.6	370.6	19.7
	Aluminum	21,537.7	299.6	21,521.2	316.2	21,552.8	284.4
	Oil and Grease	93,048.6	1,623.0	93,252.6	1,418.9	93,252.6	1,418.9
	TSS	25,555.3	796.8	24,805.1	1,547.0	25,608.3	743.7
	Total Toxic Organics	139.6	2.4	139.9	2.1	139.9	2.1
	Total Toxic Metals	1,360.0	85.4	1,353.2	92.1	1,372.6	72.9
	Total Toxics	1,499.7	90.9	1,493.1	97.4	1,512.7	78.0
	Total Conventionals	118,603.9	2,419.8	118,057.7	2,965.9	118,860.9	2,162.6
	Total Pollutants	141,641.3	2,810.3	141,072.0	3,379.5	141,926.4	2,525.0
	Sludge	1,213,400		1,210,000		1,215,250	

*The data tabulated represent performance of technology applied to all aluminum forming plants in the subcategory.

Note: Total Toxic Metals - Cadmium + Chromium + Copper + Lead + Nickel + Zinc
Total Toxics - Total Toxic Organics + Total Toxic Metals + Cyanide
Total Conventionals - Oil and Grease + TSS
Total Pollutants - Total Toxics + Total Conventionals + Aluminum

Table X-9

TREATMENT PERFORMANCE - DIRECT DISCHARGERS
ROLLING WITH NEAT OILS SUBCATEGORY

	Pollutant	Raw Waste	Option 1*		Option 2	
	Flow (l/yr)	4.142×10^9	4.142×10^9		917.9×10^6	
		(kg/yr)	Removed (kg/yr)	Discharged (kg/yr)	Removed (kg/yr)	Discharged (kg/yr)
118.	Cadmium	14.7	0.0	14.7	0.0	14.7
119.	Chromium	6,875.7	6,598.5	277.2	6,808.3	67.3
120.	Copper	2,958.6	942.3	2,016.3	2,463.6	495.0
121.	Cyanide	36.0	0.0	36.0	0.0	36.0
122.	Lead	1,785.0	1,355.7	429.3	1,670.5	114.5
124.	Nickel	518.5	0.0	518.5	38.7	479.8
128.	Zinc	5,862.1	4,822.7	1,039.4	5,609.6	252.5
	Aluminum	338,567.6	333,269.1	7,298.5	334,180.5	4,387.0
	Oil and Grease	838,422.8	794,967.5	43,455.3	821,196.8	17,226.0
	TSS	356,600.2	306,883.9	49,716.3	338,359.0	18,241.1
	Total Toxic Organics	1,257.6	1,192.5	65.2	1,231.8	25.8
	Total Toxic Metals	18,014.6	13,719.2	4,295.4	16,590.7	1,423.8
	Total Toxics	19,308.2	14,911.7	4,396.6	17,822.5	1,485.6
	Total Conventionals	1,195,023.0	1,101,851.4	93,171.6	1,159,555.8	35,467.1
	Total Pollutants	1,552,898.8	1,448,032.2	104,866.7	1,511,558.8	41,339.7
	Sludge	-----	15,024,360		15,365,540	

*Option 1 is BAT=BPT

Table X-9 (Continued)

TREATMENT PERFORMANCE - DIRECT DISCHARGERS
ROLLING WITH NEAT OILS SUBCATEGORY

	Pollutant	Option 3		Option 4		Option 5	
	Flow (1/yr)	917.9×10^6		875.1×10^6		875.1×10^6	
		Removed (kg/yr)	Discharged (kg/yr)	Removed (kg/yr)	Discharged (kg/yr)	Removed (kg/yr)	Discharged (kg/yr)
118.	Cadmium	0.0	14.7	0.0	14.7	0.0	14.7
119.	Chromium	6,816.8	58.9	6,811.8	63.9	6,819.8	55.9
120.	Copper	2,623.6	335.0	2,488.5	470.1	2,640.3	318.3
121.	Cyanide	0.0	36.0	0.0	36.0	0.0	36.0
122.	Lead	1,704.2	80.9	1,675.6	109.4	1,707.6	77.4
124.	Nickel	333.3	185.2	63.2	455.3	342.8	175.7
128.	Zinc	5,668.5	193.6	5,622.4	239.7	5,678.3	183.8
	Aluminum	334,492.0	4,075.6	334,228.1	4,339.5	334,523.7	4,043.9
	Oil and Grease	821,196.8	17,226.0	821,625.4	16,797.4	821,625.4	16,797.4
	TSS	346,271.2	10,329.0	338,873.3	17,726.8	346,382.6	10,217.6
	Total Toxic Organics	1,231.8	25.8	1,232.4	25.2	1,232.4	25.2
	Total Toxic Metals	17,146.4	868.3	16,661.5	1,353.1	17,188.8	825.8
	Total Toxics	18,378.2	930.1	17,893.9	1,414.3	18,421.2	887.0
	Total Conventionals	1,167,468.0	27,555.0	1,160,498.7	34,524.2	1,168,008.0	27,015.0
	Total Pollutants	1,520,338.2	32,560.7	1,512,620.7	40,278.0	1,520,952.9	31,945.9
	Sludge	15,426,950		15,372,900		15,431,190	

Note: Total Toxic Metals - Cadmium + Chromium + Copper + Lead + Nickel + Zinc
Total Toxics - Total Toxic Organics + Total Toxic Metals + Cyanide
Total Conventionals - Oil and Grease + TSS
Total Pollutants - Total Toxics + Total Conventionals + Aluminum

Table X-10

TREATMENT PERFORMANCE - DIRECT DISCHARGERS
ROLLING WITH EMULSIONS SUBCATEGORY

	Pollutant	Raw Waste	Option 1*		Option 2	
	Flow (l/yr)	29.58×10^9	8.934×10^9		7.336×10^9	
		(kg/yr)	Removed (kg/yr)	Discharged (kg/yr)	Removed (kg/yr)	Discharged (kg/yr)
118.	Cadmium	52.5	0.0	52.5	0.0	52.5
119.	Chromium	4,085.5	3,392.0	693.5	3,501.0	584.5
120.	Copper	3,745.1	0.0	3,745.1	0.0	3,745.1
121.	Cyanide	225.7	0.0	225.7	0.0	225.7
122.	Lead	13,006.9	11,961.4	1,045.5	12,124.9	882.0
124.	Nickel	573.2	0.0	573.2	0.0	573.2
128.	Zinc	8,372.6	5,772.1	2,600.5	6,180.8	2,191.8
	Aluminum	241,435.0	230,457.8	10,977.2	231,969.9	9,465.2
	Oil and Grease	6,801,024.0	6,710,883.0	90,141.0	6,724,504.8	76,519.2
	TSS	3,865,381.6	3,758,166.4	107,215.2	3,774,512.6	90,869.0
	Total Toxic Organics	10,201.5	10,066.3	135.2	10,086.8	114.8
	Total Toxic Metals	29,835.8	21,125.5	8,710.3	21,806.7	8,029.1
	Total Toxics	40,263.0	31,191.8	9,071.2	31,893.5	8,369.6
	Total Conventionals	10,666,405.6	10,469,049.4	197,356.2	10,499,017.4	167,388.2
	Total Pollutants	10,948,103.6	10,730,699.0	217,404.6	10,762,880.8	185,223.0
	Sludge	-----	59,063,040		59,262,050	

*Option 1 is BAT=BPT

Table X-10 (Continued)

TREATMENT PERFORMANCE - DIRECT DISCHARGERS
ROLLING WITH EMULSIONS SUBCATEGORY

	Pollutant	Option 3		Option 4		Option 5	
	Flow (l/yr)	7.336×10^9		7.032×10^9		7.032×10^9	
		Removed (kg/yr)	Discharged (kg/yr)	Removed (kg/yr)	Discharged (kg/yr)	Removed (kg/yr)	Discharged (kg/yr)
118.	Cadmium	0.0	52.5	0.0	52.5	0.0	52.5
119.	Chromium	3,574.1	511.4	3,525.4	560.1	3,595.4	490.1
120.	Copper	893.0	2,852.0	0.0	3,745.1	1,011.8	2,733.3
121.	Cyanide	0.0	225.7	0.0	225.7	0.0	225.7
122.	Lead	12,417.1	589.8	12,161.4	845.5	12,441.5	565.4
124.	Nickel	0.0	573.2	0.0	573.2	0.0	573.2
128.	Zinc	6,692.2	1,680.4	6,272.1	2,100.5	6,762.2	1,610.4
	Aluminum	234,673.1	6,761.9	232,307.8	9,127.3	234,898.4	6,536.6
	Oil and Grease	6,724,504.8	76,519.2	6,727,548.9	73,475.1	6,727,548.9	73,475.1
	TSS	3,843,190.3	22,191.4	3,778,165.5	87,216.1	3,843,981.7	21,399.9
	Total Toxic Organics	10,086.8	114.8	10,091.3	110.2	10,091.3	110.2
	Total Toxic Metals	23,576.4	6,259.3	21,958.9	7,876.9	23,810.9	6,024.9
	Total Toxics	33,663.2	6,599.8	32,050.2	8,212.8	33,902.2	6,360.8
	Total Conventionals	10,567,695.1	98,710.6	10,505,714.4	160,691.2	10,571,530.6	94,875.0
	Total Pollutants	10,836,031.4	112,072.3	10,770,072.4	178,031.3	10,840,331.2	107,772.4
	Sludge	59,697,730		59,306,530		59,726,360	

Note: Total Toxic Metals - Cadmium + Chromium + Copper + Lead + Nickel + Zinc
Total Toxics - Total Toxic Organics + Total Toxic Metals + Cyanide
Total Conventionals - Oil and Grease + TSS
Total Pollutants - Total Toxics + Total Conventionals + Aluminum

Table X-11

TREATMENT PERFORMANCE - DIRECT DISCHARGERS
EXTRUSION SUBCATEGORY

	Pollutant	Raw Waste	Option 1*		Option 2	
	Flow (l/yr)	13.15×10^9	10.32×10^9		2.807×10^9	
		(kg/yr)	Removed (kg/yr)	Discharged (kg/yr)	Removed (kg/yr)	Discharged (kg/yr)
118.	Cadmium	45.2	0.0	45.2	0.0	45.2
119.	Chromium	65,281.3	64,514.2	767.0	65,076.3	204.9
120.	Copper	7,500.7	1,932.4	5,568.3	6,007.6	1,493.1
121.	Cyanide	693.7	16.0	677.7	507.8	185.9
122.	Lead	2,694.0	1,528.9	1,165.1	2,372.0	321.9
124.	Nickel	3,764.8	0.0	3,764.8	2,304.5	1,460.2
128.	Zinc	10,937.3	8,060.9	2,876.4	10,168.7	768.5
	Aluminum	1,129,189.0	1,114,834.9	14,354.1	1,122,633.9	6,555.0
	Oil and Grease	375,028.2	269,691.4	105,336.8	339,952.9	35,075.3
	TSS	1,425,786.9	1,301,990.8	123,796.1	1,386,304.6	39,482.3
	Total Toxic Organics	562.5	404.5	158.0	509.9	52.6
	Total Toxic Metals	90,223.3	76,036.4	14,186.8	85,929.1	4,293.8
	Total Toxics	91,479.5	76,456.9	15,022.5	86,946.8	4,532.3
	Total Conventionals	1,800,815.1	1,571,682.2	229,132.9	1,726,257.5	74,557.6
	Total Pollutants	3,021,483.6	2,762,974.0	258,509.5	2,935,838.2	85,644.9
	Sludge	-----	40,036,230		41,199,710	

*Option 1 is BAT=BPT

Table X-11 (Continued)

TREATMENT PERFORMANCE - DIRECT DISCHARGERS
EXTRUSION SUBCATEGORY

	Pollutant	Option 3		Option 4		Option 5	
	Flow (l/yr)	2.807×10^9		2.804×10^9		2.804×10^9	
		Removed (kg/yr)	Discharged (kg/yr)	Removed (kg/yr)	Discharged (kg/yr)	Removed (kg/yr)	Discharged (kg/yr)
118.	Cadmium	0.0	45.2	0.0	45.2	0.0	45.2
119.	Chromium	65,102.0	179.3	65,076.6	204.7	65,102.2	179.1
120.	Copper	6,494.3	1,006.4	6,009.4	1,491.3	6,495.6	1,005.1
121.	Cyanide	566.7	127.0	508.0	185.6	566.9	126.8
122.	Lead	2,474.5	219.5	2,372.4	321.6	2,474.8	219.2
124.	Nickel	3,201.2	563.6	2,306.4	1,458.4	3,201.9	562.9
128	Zinc	10,348.1	589.2	10,169.7	767.6	10,348.8	588.5
	Aluminum	1,123,581.8	5,607.2	1,122,637.5	6,551.5	1,123,584.2	5,604.8
	Oil and Grease	339,952.9	35,075.3	339,985.1	35,043.2	339,985.1	35,043.2
	TSS	1,410,385.6	15,401.3	1,386,343.2	39,443.7	1,410,393.9	15,393.0
	Total Toxic Organics	509.9	52.6	510.0	52.6	510.0	52.6
	Total Toxic Metals	87,620.1	2,603.2	85,934.5	4,288.8	87,623.3	2,600.0
	Total Toxics	88,696.7	2,782.8	86,952.5	4,527.0	88,700.2	2,779.4
	Total Conventionals	1,750,338.5	50,476.6	1,726,328.3	74,486.9	1,750,379.0	50,436.2
	Total Pollutants	2,962,617.0	58,866.6	2,935,918.3	85,565.4	2,962,663.4	58,820.4
	Sludge	41,308,840		41,200,270		41,389,170	

Note: Total Toxic Metals - Cadmium + Chromium + Copper + Lead + Nickel + Zinc
Total Toxics - Total Toxic Organics + Total Toxic Metals + Cyanide
Total Conventionals - Oil and Grease + TSS
Total Pollutants - Total Toxics + Total Conventionals + Aluminum

Table X-12

TREATMENT PERFORMANCE - DIRECT DISCHARGERS
DRAWING WITH NEAT OILS SUBCATEGORY

	Pollutant	Raw Waste	Option 1*		Option 2	
	Flow (l/yr)	1.770×10^9	1.770×10^9		268.8×10^6	
		(kg/yr)	Removed (kg/yr)	Discharged (kg/yr)	Removed (kg/yr)	Discharged (kg/yr)
118.	Cadmium	9.4	0.0	9.4	0.0	9.4
119.	Chromium	2,626.5	2,534.7	91.9	2,610.6	15.9
120.	Copper	2,484.8	1,812.4	672.4	2,363.1	121.7
121.	Cyanide	19.0	0.0	19.0	0.0	19.0
122.	Lead	1,019.8	869.5	150.2	983.5	36.3
124.	Nickel	417.2	0.0	417.2	303.8	113.5
128.	Zinc	5,106.8	4,762.3	344.6	5,047.1	59.7
	Aluminum	306,418.4	301,972.9	4,445.5	303,026.9	3,391.6
	Oil and Grease	38,901.4	19,326.8	19,574.5	28,821.9	10,079.5
	TSS	226,144.6	204,886.9	21,257.7	216,280.9	9,863.7
	Total Toxic Organics	58.4	29.0	29.4	43.2	15.1
	Total Toxic Metals	11,664.5	9,978.9	1,685.7	11,308.1	356.5
	Total Toxics	11,741.9	10,007.9	1,734.1	11,351.3	390.6
	Total Conventionals	265,046.0	224,213.7	40,832.2	245,102.8	19,943.2
	Total Pollutants	583,206.3	536,194.5	47,011.8	559,481.0	23,725.4
	Sludge	-----	9,712,050		9,866,490	

*Option 1 is BAT=BPT

Table X-12 (Continued)

TREATMENT PERFORMANCE - DIRECT DISCHARGERS
DRAWING WITH NEAT OILS SUBCATEGORY

	Pollutant	Option 3		Option 4		Option 5	
	Flow (l/yr)	268.8×10^6		268.4×10^6		268.4×10^6	
		Removed (kg/yr)	Discharged (kg/yr)	Removed (kg/yr)	Discharged (kg/yr)	Removed (kg/yr)	Discharged (kg/yr)
118.	Cadmium	0.0	9.4	0.0	9.4	0.0	9.4
119.	Chromium	2,612.6	13.9	2,610.7	15.9	2,612.6	13.9
120.	Copper	2,401.0	83.8	2,363.4	121.4	2,401.1	83.7
121.	Cyanide	4.0	15.0	0.0	19.0	4.0	14.9
122.	Lead	991.4	28.3	983.5	36.3	991.5	28.3
124.	Nickel	373.4	43.8	304.0	113.2	373.5	43.7
128.	Zinc	5,061.0	45.8	5,047.2	59.6	5,061.1	45.7
	Aluminum	303,100.5	3,317.9	303,027.4	3,391.0	303,100.9	3,317.6
	Oil and Grease	28,821.9	10,079.5	28,826.6	10,074.8	28,826.6	10,074.8
	TSS	218,151.9	7,992.7	216,286.6	9,858.0	218,153.2	7,991.5
	Total Toxic Organics	43.2	15.1	43.2	15.1	43.2	15.1
	Total Toxic Metals	11,439.4	225.0	11,308.8	355.8	11,439.8	224.7
	Total Toxics	11,486.6	255.1	11,352.0	389.9	11,487.0	254.7
	Total Conventionals	246,973.8	18,072.2	245,113.2	19,932.8	246,979.8	18,066.3
	Total Pollutants	561,560.9	21,645.2	559,492.6	23,713.7	561,567.7	21,638.6
	Sludge	9,881,160		9,866,570		9,881,210	

Note: Total Toxic Metals - Cadmium + Chromium + Copper + Lead + Nickel + Zinc
Total Toxics - Total Toxic Organics + Total Toxic Metals + Cyanide
Total Conventionals - Oil and Grease + TSS
Total Pollutants - Total Toxics + Total Conventionals + Aluminum

Table X-13

TREATMENT PERFORMANCE - DIRECT DISCHARGERS
DRAWING WITH EMULSIONS OR SOAPS SUBCATEGORY

	Pollutant	Raw Waste	Option 1*		Option 2	
	Flow (l/yr)	271.3×10^6	271.3×10^6		79.62×10^6	
		(kg/yr)	Removed (kg/yr)	Discharged (kg/yr)	Removed (kg/yr)	Discharged (kg/yr)
118.	Cadmium	0.4	0.0	0.4	0.0	0.4
119.	Chromium	480.8	459.1	21.7	474.4	6.4
120.	Copper	21.9	0.0	21.9	0.0	21.9
121.	Cyanide	1.8	0.0	1.8	0.0	1.8
122.	Lead	36.9	4.3	32.6	27.3	9.6
124.	Nickel	6.2	0.0	6.2	0.0	6.2
128.	Zinc	28.6	0.0	28.6	4.7	23.9
	Aluminum	289.8	0.0	289.8	201.4	88.4
	Oil and Grease	51,542.6	48,829.4	2,713.2	50,746.4	796.2
	TSS	6,926.7	3,670.9	3,255.8	5,971.3	955.4
	Total Toxic Organics	77.3	73.2	4.1	76.1	1.2
	Total Toxic Metals	574.8	463.4	111.4	506.4	68.4
	Total Toxics	653.9	536.6	117.3	582.5	71.4
	Total Conventionals	58,469.3	52,500.3	5,969.0	56,717.7	1,751.6
	Total Pollutants	59,413.0	53,036.9	6,376.1	57,501.6	1,911.4
	Sludge	-----	267,560		294,800	

*Option 1 is BAT=BPT

Table X-13 (Continued)

TREATMENT PERFORMANCE - DIRECT DISCHARGERS
DRAWING WITH EMULSIONS OR SOAPS SUBCATEGORY

	Pollutant	Option 3		Option 4		Option 5	
	Flow (l/yr)	79.62×10^6		68.97×10^6		68.97×10^6	
		Removed (kg/yr)	Discharged (kg/yr)	Removed (kg/yr)	Discharged (kg/yr)	Removed (kg/yr)	Discharged (kg/yr)
118.	Cadmium	0.0	0.4	0.0	0.4	0.0	0.4
119.	Chromium	475.2	5.6	475.3	5.5	476.0	4.8
120.	Copper	0.0	21.9	0.0	21.9	0.0	21.9
121.	Cyanide	0.0	1.8	0.0	1.8	0.0	1.8
122.	Lead	30.5	6.4	28.6	8.3	31.4	5.5
124.	Nickel	0.0	6.2	0.0	6.2	0.0	6.2
128.	Zinc	10.3	18.3	7.9	20.7	12.7	15.9
	Aluminum	230.9	58.9	213.3	76.6	238.8	51.0
	Oil and Grease	50,746.4	796.2	50,852.9	689.7	50,852.9	689.7
	TSS	6,719.7	207.0	6,099.1	827.7	6,747.4	179.3
	Total Toxic Organics	76.1	1.2	76.3	1.0	76.3	1.0
	Total Toxic Metals	516.0	58.8	511.8	63.0	520.1	54.7
	Total Toxics	592.1	61.8	588.1	65.8	596.4	57.5
	Total Conventionals	57,466.1	1,003.2	56,952.0	1,517.4	57,600.3	869.0
	Total Pollutants	58,289.1	1,123.9	57,753.4	1,659.8	58,435.5	977.5
	Sludge	299,470		296,360		300,400	

Note: Total Toxic Metals - Cadmium + Chromium + Copper + Lead + Nickel + Zinc
Total Toxics - Total Toxic Organics + Total Toxic Metals + Cyanide
Total Conventionals - Oil and Grease + TSS
Total Pollutants - Total Toxics + Total Conventionals + Aluminum

Table X-14

TREATMENT PERFORMANCE - NORMAL PLANT
ROLLING WITH NEAT OILS SUBCATEGORY

	Pollutant	Raw Waste	Option 1*		Option 2	
	Flow (l/yr)	103.5×10^6	103.5×10^6		19.2×10^6	
		(kg/yr)	Removed (kg/yr)	Discharged (kg/yr)	Removed (kg/yr)	Discharged (kg/yr)
118.	Cadmium	0.3	0.0	0.3	0.0	0.3
119.	Chromium	141.2	135.5	5.7	139.8	1.4
120.	Copper	60.1	19.0	41.0	49.7	10.4
121.	Cyanide	0.7	0.0	0.7	0.0	0.7
122.	Lead	39.8	30.9	8.9	37.4	2.4
124.	Nickel	10.5	0.0	10.5	0.8	9.7
128.	Zinc	118.1	96.7	21.5	112.8	5.3
	Aluminum	6,797.4	6,648.8	148.6	6,708.6	88.7
	Oil and Grease	21,747.2	20,854.9	892.4	21,394.0	353.2
	TSS	7,717.4	6,695.2	1,022.2	7,342.2	375.2
	Total Toxic Organics	32.6	31.3	1.3	32.1	0.5
	Total Toxic Metals	370.0	282.1	87.9	340.5	29.6
	Total Toxics	403.3	313.4	90.0	372.6	30.8
	Total Conventionals	29,464.6	27,550.0	1,914.6	28,736.2	728.4
	Total Pollutants	36,665.1	34,512.2	2,153.1	35,817.4	847.9
	Sludge	-----	327,670		335,840	

*Option 1 is BAT=BPT

Table X-14 (Continued)

TREATMENT PERFORMANCE - NORMAL PLANT
ROLLING WITH NEAT OILS SUBCATEGORY

	Pollutant	Option 3		Option 4		Option 5	
	Flow (l/yr)	19.2×10^6		18.1×10^6		18.1×10^6	
		Removed (kg/yr)	Discharged (kg/yr)	Removed (kg/yr)	Discharged (kg/yr)	Removed (kg/yr)	Discharged (kg/yr)
118.	Cadmium	0.0	0.3	0.0	0.3	0.0	0.3
119.	Chromium	140.0	1.2	139.9	1.3	140.1	1.2
120.	Copper	53.0	7.0	50.3	9.7	53.5	6.6
121.	Cyanide	0.0	0.7	0.0	0.7	0.0	0.7
122.	Lead	38.1	1.7	37.5	2.3	38.2	1.6
124.	Nickel	6.7	3.8	1.3	9.2	6.9	3.6
128.	Zinc	114.1	4.1	113.2	5.0	114.3	3.8
	Aluminum	6,715.2	82.2	6,709.9	87.4	6,716.0	81.3
	Oil and Grease	21,394.0	353.2	21,405.4	341.8	21,405.4	341.8
	TSS	7,508.6	208.8	7,355.8	361.6	7,511.5	205.9
	Total Toxic Organics	32.1	0.5	32.1	0.5	32.1	0.5
	Total Toxic Metals	351.9	18.2	342.2	27.8	352.9	17.1
	Total Toxics	383.9	19.4	374.3	29.1	385.1	18.3
	Total Conventionals	28,902.6	562.0	28,761.3	703.4	28,916.9	547.7
	Total Pollutants	36,001.7	663.6	35,845.5	819.9	36,018.0	647.3
	Sludge	337,120		336,030		337,230	

Note: Total Toxic Metals - Cadmium + Chromium + Copper + Lead + Nickel + Zinc
Total Toxics - Total Toxic Organics + Total Toxic Metals + Cyanide
Total Conventionals - Oil and Grease + TSS
Total Pollutants - Total Toxics + Total Conventionals + Aluminum

Table X-15

TREATMENT PERFORMANCE - NORMAL PLANT
ROLLING WITH EMULSIONS SUBCATEGORY

	Pollutant	Raw Waste	Option 1*		Option 2	
	Flow (l/yr)	1.1×10^9	342.6×10^6		276.9×10^6	
		(kg/yr)	Removed (kg/yr)	Discharged (kg/yr)	Removed (kg/yr)	Discharged (kg/yr)
118.	Cadmium	2.1	0.0	2.1	0.0	2.1
119.	Chromium	167.5	140.9	26.6	145.4	22.1
120.	Copper	150.0	6.3	143.7	7.1	142.9
121.	Cyanide	8.6	0.1	8.6	0.1	8.6
122.	Lead	522.3	482.3	40.0	489.0	33.3
124.	Nickel	23.2	0.6	22.6	0.6	22.6
128.	Zinc	327.3	227.8	99.6	244.6	82.7
	Aluminum	9,621.6	9,198.8	422.8	9,261.2	360.4
	Oil and Grease	271,630.5	268,172.5	3,458.1	268,734.9	2,895.6
	TSS	149,629.7	145,518.2	4,114.4	146,193.2	3,436.5
	Total Toxic Organics	407.4	402.3	5.2	403.1	4.3
	Total Toxic Metals	1,192.4	857.9	334.6	886.8	305.6
	Total Toxics	1,608.4	1,260.2	348.3	1,290.0	318.5
	Total Conventionals	421,260.2	413,690.7	7,569.5	414,928.1	6,332.0
	Total Pollutants	432,490.2	424,149.7	8,340.6	425,479.3	7,010.9
	Sludge	-----	2,336,770		2,345,260	

*Option 1 is BAT=BPT

Table X-15 (Continued)

TREATMENT PERFORMANCE - NORMAL PLANT
ROLLING WITH EMULSIONS SUBCATEGORY

	Pollutant	Option 3		Option 4		Option 5	
	Flow (l/yr)	276.9×10^6		264.6×10^6		264.6×10^6	
		Removed (kg/yr)	Discharged (kg/yr)	Removed (kg/yr)	Discharged (kg/yr)	Removed (kg/yr)	Discharged (kg/yr)
118.	Cadmium	0.1	2.0	0.1	2.0	0.1	2.0
119.	Chromium	148.2	19.3	146.4	21.1	149.0	18.4
120.	Copper	42.4	107.6	8.2	141.9	47.2	102.8
121.	Cyanide	0.1	8.5	0.1	8.5	0.1	8.5
122.	Lead	500.1	22.3	490.5	31.8	501.1	21.3
124.	Nickel	0.9	22.2	1.1	22.0	1.1	22.0
128.	Zinc	263.9	63.4	248.3	79.0	266.8	60.6
	Aluminum	9,363.2	258.4	9,274.9	346.7	9,372.3	249.2
	Oil and Grease	268,734.9	2,895.6	268,858.1	2,772.4	268,858.1	2,772.4
	TSS	148,784.7	844.9	146,341.0	3,288.6	148,816.8	812.9
	Total Toxic Organics	403.1	4.3	403.3	4.2	403.3	4.2
	Total Toxic Metals	955.6	236.9	894.6	297.8	965.3	227.1
	Total Toxics	1,358.8	249.7	1,298.1	310.5	1,368.7	239.8
	Total Conventionals	417,519.7	3,740.5	415,199.1	6,061.0	417,674.9	3,585.3
	Total Pollutants	428,241.7	4,248.6	425,772.1	6,718.2	428,416.0	4,074.3
	Sludge	2,361,460		2,346,820		2,362,590	

Note: Total Toxic Metals - Cadmium + Chromium + Copper + Lead + Nickel + Zinc
Total Toxics - Total Toxic Organics + Total Toxic Metals + Cyanide
Total Conventionals - Oil and Grease + TSS
Total Pollutants - Total Toxics + Total Conventionals + Aluminum

Table X-16

TREATMENT PERFORMANCE - NORMAL PLANT
EXTRUSION SUBCATEGORY

	Pollutant	Raw Waste	Option 1*		Option 2	
	Flow (l/yr)	124.7×10^6	95.6×10^6		27.7×10^6	
		(kg/yr)	Removed (kg/yr)	Discharged (kg/yr)	Removed (kg/yr)	Discharged (kg/yr)
118.	Cadmium	0.5	0.0	0.5	0.0	0.5
119.	Chromium	899.8	892.7	7.1	897.8	2.0
120.	Copper	85.2	33.5	51.7	70.8	14.4
121.	Cyanide	9.9	3.9	6.0	8.2	1.7
122.	Lead	27.7	16.9	10.8	24.6	3.1
124.	Nickel	35.9	2.9	36.6	25.4	14.1
128.	Zinc	119.4	92.7	26.7	112.0	7.4
	Aluminum	12,166.4	12,033.9	132.5	12,105.2	61.2
	Oil and Grease	3,896.3	2,920.1	976.2	3,562.6	333.6
	TSS	12,917.0	11,769.3	1,147.7	12,540.3	376.7
	Total Toxic Organics	5.8	4.4	1.5	5.3	0.5
	Total Toxic Metals	1,168.5	1,038.6	133.5	1,130.5	41.6
	Total Toxics	1,184.2	1,046.9	140.9	1,144.0	43.8
	Total Conventionals	16,813.3	14,689.4	2,123.9	16,102.9	710.4
	Total Pollutants	30,163.9	27,770.2	2,397.3	29,352.2	815.4
	Sludge	-----	423,330		434,010	

*Option 1 is BAT=BPT

Table X-16 (Continued)

TREATMENT PERFORMANCE - NORMAL PLANT
EXTRUSION SUBCATEGORY

	Pollutant	Option 3		Option 4		Option 5	
	Flow (1/yr)	27.7×10^6		27.7×10^6		27.7×10^6	
		Removed (kg/yr)	Discharged (kg/yr)	Removed (kg/yr)	Discharged (kg/yr)	Removed (kg/yr)	Discharged (kg/yr)
118.	Cadmium	0.0	0.5	0.0	0.5	0.0	0.5
119.	Chromium	898.1	1.7	897.8	2.0	898.1	1.7
120.	Copper	75.5	9.7	70.8	14.4	75.5	9.7
121.	Cyanide	8.7	1.2	8.2	1.7	8.7	1.2
122.	Lead	25.6	2.1	24.6	3.1	25.6	2.1
124.	Nickel	34.0	5.5	25.4	14.1	34.1	5.4
128.	Zinc	113.7	5.7	112.0	7.4	113.7	5.7
	Aluminum	12,114.4	52.0	12,105.2	61.2	12,114.4	52.0
	Oil and Grease	3,562.6	333.6	3,563.1	333.2	3,563.1	333.2
	TSS	12,773.3	143.7	12,540.8	376.2	12,773.4	143.6
	Total Toxic Organics	5.3	0.5	5.3	0.5	5.3	0.5
	Total Toxic Metals	1,146.9	25.3	1,130.6	41.6	1,146.9	25.2
	Total Toxics	1,160.9	27.0	1,144.1	43.8	1,161.0	26.9
	Total Conventionals	16,335.9	477.4	16,103.9	709.4	16,336.5	476.8
	Total Pollutants	29,611.2	556.4	29,353.2	814.3	29,611.8	555.8
	Sludge	435,840		434,020		435,850	

Note: Total Toxic Metals - Cadmium + Chromium + Copper + Lead + Nickel + Zinc
Total Toxics - Total Toxic Organics + Total Toxic Metals + Cyanide
Total Conventionals - Oil and Grease + TSS
Total Pollutants - Total Toxics + Total Conventionals + Aluminum

Table X-17

TREATMENT PERFORMANCE - NORMAL PLANT
FORGING SUBCATEGORY

	Pollutant	Raw Waste	Option 1*		Option 2		Option 3	
	Flow (l/yr)	137.6×10^6	137.6×10^6		17.9×10^6		17.9×10^6	
		(kg/yr)	Removed (kg/yr)	Discharged (kg/yr)	Removed (kg/yr)	Discharged (kg/yr)	Removed (kg/yr)	Discharged (kg/yr)
118.	Cadmium	0.8	0.0	0.8	0.0	0.8	0.3	0.6
119.	Chromium	271.0	264.5	6.5	270.1	0.9	270.2	0.8
120.	Copper	222.4	174.5	47.9	215.1	7.3	217.3	5.1
121.	Cyanide	2.5	0.0	2.5	1.2	1.3	1.5	1.1
122.	Lead	98.4	87.5	10.9	95.9	2.5	96.4	2.0
124.	Nickel	37.0	0.0	37.0	30.5	6.6	34.5	2.5
128.	Zinc	461.4	436.9	24.5	457.9	3.5	458.7	2.7
	Aluminum	27,650.8	27,274.6	376.3	27,352.3	298.6	27,356.6	294.3
	Oil and Grease	2,888.8	1,344.0	1,544.8	2,044.2	844.5	2,044.2	844.5
	TSS	20,013.7	18,361.1	1,652.6	19,201.3	812.3	19,310.0	703.7
	Total Toxic Organics	5.2	2.0	3.2	3.1	2.2	3.1	2.2
	Total Toxic Metals	1,091.0	963.4	127.7	1,069.5	21.6	1,077.4	13.7
	Total Toxics	1,098.7	965.4	133.4	1,073.8	25.0	1,081.9	16.9
	Total Conventionals	22,902.5	19,705.1	3,197.5	21,245.6	1,656.8	21,354.2	1,548.2
	Total Pollutants	51,652.0	47,945.0	3,707.1	49,671.6	1,980.5	49,792.7	1,859.4
	Sludge	-----	875,120		886,850		887,710	

*Option 1 is BAT=BPT

Table X-17 (Continued)

TREATMENT PERFORMANCE - NORMAL PLANT
FORGING SUBCATEGORY

	Pollutant	Option 4		Option 5		Option 6	
	Flow (l/yr)	17.8×10^6		17.8×10^6		17.8×10^6	
		Removed (kg/yr)	Discharged (kg/yr)	Removed (kg/yr)	Discharged (kg/yr)	Removed (kg/yr)	Discharged (kg/yr)
118.	Cadmium	0.0	0.8	0.3	0.6	0.3	0.6
119.	Chromium	270.1	0.9	270.2	0.8	270.2	0.8
120.	Copper	215.1	7.3	217.3	5.1	217.3	5.1
121.	Cyanide	1.2	1.3	1.5	1.0	1.5	1.0
122.	Lead	95.9	2.5	96.4	2.0	96.4	2.0
124.	Nickel	30.5	6.6	34.5	2.5	34.5	2.5
128.	Zinc	457.9	3.5	458.7	2.7	458.7	2.7
	Aluminum	27,352.3	298.5	27,356.6	294.3	27,356.6	294.3
	Oil and Grease	2,044.4	844.4	2,044.4	844.4	2,044.4	844.4
	TSS	19,201.5	812.1	19,310.0	703.7	19,310.0	703.7
	Total Toxic Organics	3.1	2.2	3.1	2.2	4.0	1.3
	Total Toxic Metals	1,069.5	21.5	1,077.4	13.7	1,077.4	13.7
	Total Toxics	1,073.8	25.0	1,081.9	16.9	1,082.8	16.0
	Total Conventionals	21,245.9	1,656.5	21,354.4	1,548.4	21,354.4	1,548.4
	Total Pollutants	49,672.0	1,980.1	49,792.9	1,859.2	49,793.8	1,858.3
	Sludge	886,850		887,710		887,710	

Note: Total Toxic Metals - Cadmium + Chromium + Copper + Lead + Nickel + Zinc
Total Toxics - Total Toxic Organics + Total Toxic Metals + Cyanide
Total Conventionals - Oil and Grease + TSS
Total Pollutants - Total Toxics + Total Conventionals + Aluminum

Table X-18

TREATMENT PERFORMANCE - NORMAL PLANT
DRAWING WITH NEAT OILS SUBCATEGORY

	Pollutant	Raw Waste	Option 1*		Option 2	
	Flow (l/yr)	37.1×10^6	37.1×10^6		5.7×10^6	
		(kg/yr)	Removed (kg/yr)	Discharged (kg/yr)	Removed (kg/yr)	Discharged (kg/yr)
118.	Cadmium	0.2	0.0	0.2	0.0	0.2
119.	Chromium	121.8	119.9	1.9	121.5	0.3
120.	Copper	51.3	37.1	14.2	48.7	2.6
121.	Cyanide	1.2	0.5	0.7	0.8	0.4
122.	Lead	21.3	18.1	3.2	20.5	0.8
124.	Nickel	8.6	0.0	8.6	6.2	2.4
128.	Zinc	107.4	100.1	7.3	106.1	1.3
	Aluminum	6,350.0	6,257.8	92.2	6,280.0	70.0
	Oil and Grease	1,047.3	638.1	409.2	838.3	209.0
	TSS	4,736.0	4,290.9	445.1	4,531.1	204.8
	Total Toxic Organics	1.6	1.0	0.6	1.3	0.3
	Total Toxic Metals	311.8	275.2	35.4	303.0	7.6
	Total Toxics	314.6	276.6	36.7	305.1	8.3
	Total Conventionals	5,783.3	4,929.0	854.3	5,369.4	413.8
	Total Pollutants	12,447.9	11,463.4	983.2	11,954.5	492.1
	Sludge	-----	203,440		206,700	

*Option 1 is BAT=BPT

Table X-18 (Continued)

TREATMENT PERFORMANCE - NORMAL PLANT
DRAWING WITH NEAT OILS SUBCATEGORY

	Pollutant	Option 3		Option 4		Option 5	
	Flow (1/yr)	5.7×10^6		5.7×10^6		5.7×10^6	
		Removed (kg/yr)	Discharged (kg/yr)	Removed (kg/yr)	Discharged (kg/yr)	Removed (kg/yr)	Discharged (kg/yr)
118.	Cadmium	0.0	0.2	0.0	0.2	0.0	0.2
119.	Chromium	121.5	0.3	121.5	0.3	121.5	0.3
120.	Copper	49.5	1.8	48.7	2.6	49.5	1.8
121.	Cyanide	0.9	0.3	0.8	0.4	0.9	0.3
122.	Lead	20.7	0.6	20.5	0.8	20.7	0.6
124.	Nickel	7.7	0.9	6.2	2.4	7.7	0.9
128.	Zinc	106.4	1.0	106.2	1.3	106.4	1.0
	Aluminum	6,281.6	68.4	6,280.0	70.0	6,281.6	68.4
	Oil and Grease	838.3	209.0	838.5	208.8	838.5	208.8
	TSS	4,571.0	164.9	4,531.4	204.6	4,571.1	164.9
	Total Toxic Organics	1.3	0.3	1.3	0.3	1.3	0.3
	Total Toxic Metals	305.8	4.8	303.1	7.6	305.9	4.8
	Total Toxics	308.0	5.4	305.1	8.3	308.0	5.4
	Total Conventionals	5,409.3	373.9	5,369.9	413.3	5,409.6	373.6
	Total Pollutants	11,998.9	447.7	11,955.0	491.6	11,999.2	447.4
	Sludge	207,010		206,700		207,010	

Note: Total Toxic Metals - Cadmium + Chromium + Copper + Lead + Nickel + Zinc
Total Toxics - Total Toxic Organics + Total Toxic Metals + Cyanide
Total Conventionals - Oil and Grease + TSS
Total Pollutants - Total Toxics + Total Conventionals + Aluminum

Table X-19

TREATMENT PERFORMANCE - NORMAL PLANT DRAWING WITH EMULSIONS OR SOAPS SUBCATEGORY

	Pollutant	Raw Waste	Option 1*		Option 2	
	Flow (l/yr)	31.8×10^6	31.8×10^6		8.5×10^6	
		(kg/yr)	Removed (kg/yr)	Discharged (kg/yr)	Removed (kg/yr)	Discharged (kg/yr)
118.	Cadmium	0.1	0.0	0.1	0.0	0.1
119.	Chromium	52.6	50.3	2.7	51.9	0.6
120.	Copper	15.4	9.4	6.1	12.6	2.8
121.	Cyanide	0.2	0.0	0.2	0.0	0.2
122.	Lead	10.3	6.8	3.5	9.3	1.0
124.	Nickel	2.8	0.0	2.8	1.4	1.3
128.	Zinc	30.0	25.5	4.5	27.6	2.4
	Aluminum	1,679.8	1,632.0	47.8	1,653.7	26.1
	Oil and Grease	7,282.4	6,954.3	328.1	7,157.6	124.8
	TSS	2,027.1	1,645.3	381.8	1,889.3	137.8
	Total Toxic Organics	10.9	10.4	0.5	10.7	0.2
	Total Toxic Metals	111.2	92.0	19.2	102.8	8.4
	Total Toxics	122.3	102.4	19.9	113.5	8.8
	Total Conventionals	9,309.5	8,599.6	709.9	9,046.8	262.7
	Total Pollutants	11,111.7	10,334.1	777.6	10,814.1	297.6
	Sludge	-----	89,850		92,840	

*Option 1 is BAT=BPT

Table X-19 (Continued)

TREATMENT PERFORMANCE - NORMAL PLANT DRAWING WITH EMULSIONS OR SOAPS SUBCATEGORY

	Pollutant	Option 3		Option 4		Option 5	
	Flow (1/yr)	8.5×10^6		6.9×10^6		6.9×10^6	
		Removed (kg/yr)	Discharged (kg/yr)	Removed (kg/yr)	Discharged (kg/yr)	Removed (kg/yr)	Discharged (kg/yr)
118.	Cadmium	0.0	0.1	0.0	0.0	0.0	0.0
119.	Chromium	52.0	0.6	52.0	0.5	52.1	0.5
120.	Copper	12.9	2.5	13.0	2.5	13.2	2.2
121.	Cyanide	0.0	0.2	0.0	0.2	0.0	0.2
122.	Lead	9.6	0.7	9.4	0.9	9.7	0.6
124.	Nickel	1.9	0.8	1.6	1.2	2.0	0.8
128.	Zinc	28.1	1.9	28.0	2.0	28.5	1.5
	Aluminum	1,656.7	23.0	1,655.5	24.3	1,657.9	21.9
	Oil and Grease	7,157.6	124.8	7,173.3	109.1	7,173.3	109.1
	TSS	1,965.8	61.3	1,908.1	119.0	1,969.9	57.2
	Total Toxic Organics	10.7	0.2	10.8	0.2	10.8	0.2
	Total Toxic Metals	104.6	6.6	104.1	7.1	105.6	5.6
	Total Toxics	115.4	7.0	114.9	7.5	116.4	6.0
	Total Conventionals	9,123.4	186.1	9,081.4	228.1	9,143.1	166.4
	Total Pollutants	10,895.5	216.2	10,851.7	260.0	10,917.4	194.2
	Sludge	93,330		93,080		93,480	

Note: Total Toxic Metals - Cadmium + Chromium + Copper + Lead + Nickel + Zinc
Total Toxics - Total Toxic Organics + Total Toxic Metals + Cyanide
Total Conventionals - Oil and Grease + TSS
Total Pollutants - Total Toxics + Total Conventionals + Aluminum

Table X-20

PRODUCTION NORMALIZED RAW WASTE VALUES AND CONCENTRATIONS FOR ALUMINUM FORMING WASTEWATER STREAMS

Pollutant	Rolling With Neat Oils Core Waste Streams Without Annealing		Rolling With Neat Oils Core Waste Streams With Annealing		Rolling With Emulsions Core Waste Streams	
	mg/kkg	mg/l	mg/kkg	mg/l	mg/kkg	mg/l
Cadmium	0.7	0.042	0.7	0.016	11.6	0.127
Chromium	3.5	0.211	3.6	0.084	100.6	1.104
Copper	36.7	2.214	36.9	0.860	637.7	7.001
Cyanide	0.5	0.030	0.5	0.012	12.5	0.137
Lead	193.6	11.677	193.7	4.512	3,263.6	35.828
Nickel	3.9	0.235	3.9	0.091	105.9	1.163
Zinc	34.8	2.099	36.7	0.855	750.8	8.242
Aluminum	1,211.0	73.040	1,211.0	28.209	22,511.0	247.129
Oil and Grease	237,100.0	14,300.362	237,100.0	5,522.944	1,617,100.0	17,752.772
TSS	27,110.0	1,635.103	27,145.2	632.313	456,110.0	5,007.246

Pollutant	Extrusion Core Waste Streams		Forging Core Waste Streams		Drawing With Neat Oils Core Waste Streams	
	mg/kkg	mg/l	mg/kkg	mg/l	mg/kkg	mg/l
Cadmium	44.3	0.137	0.3	0.038	0.3	0.038
Chromium	3,917.3	12.102	1.2	0.154	1.2	0.154
Copper	6,766.3	20.903	13.0	1.665	13.0	1.665
Cyanide	7.8	0.024	0.2	0.026	0.2	0.026
Lead	1,401.7	4.330	68.6	8.787	68.6	8.787
Nickel	2,163.4	6.683	1.4	0.179	1.4	0.179
Zinc	5,556.3	17.165	12.3	1.576	12.3	1.576
Aluminum	759,889.0	2,347.510	429.0	54.951	429.0	54.951
Oil and Grease	89,215.0	275.610	84,100.0	10,772.384	84,100.0	10,772.384
TSS	21,980.0	67.902	9,610.0	1,230.947	9,610.0	1,230.947

Table X-20 (Continued)

PRODUCTION NORMALIZED RAW WASTE VALUES AND CONCENTRATIONS FOR ALUMINUM FORMING WASTEWATER STREAMS

Pollutant	Drawing With Emulsions or Soaps Core Waste Streams		Continuous Sheet Casting Spent Lubricant		Solution Heat Treatment Contact, Cooling Water	
	mg/kkg	mg/l	mg/kkg	mg/l	mg/kkg	mg/l
Cadmium	4.1	0.010	0.1	0.054	8.3	0.001
Chromium	20.3	0.48	0.5	0.271	14,200.0	1.843
Copper	215.0	0.507	5.0	2.713	486.0	0.063
Cyanide	2.7	0.006	0.1	0.054	49.9	0.006
Lead	1,128.6	2.660	26.3	14.270	247.0	0.032
Nickel	22.6	0.053	0.5	0.271	167.0	0.022
Zinc	203.3	0.479	4.7	2.550	694.0	0.090
Aluminum	7,079.0	16.684	164.0	88.985	3,280.0	0.426
Oil and Grease	1,764,100.0	4,157.671	32,300.0	17,525.773	206,000.0	26.736
TSS	158,610.0	373.816	3,690.0	2,002.170	86,300.0	11.201

Pollutant	Cleaning or Etching Bath		Cleaning or Etching Rinse		Cleaning or Etching Scrubber Liquor	
	mg/kkg	mg/l	mg/kkg	mg/l	mg/kkg	mg/l
Cadmium	218.0	1.067	24.4	0.001	0.0	0.000
Chromium	19,800.0	96.869	26,700.0	1.584	0.0	0.000
Copper	34,100.0	166.830	33,600.0	1.993	172.0	0.010
Cyanide	25.3	0.124	248.0	0.015	155.0	0.009
Lead	6,640.0	32.485	20,600.0	1.222	344.0	0.020
Nickel	10,900.0	53.327	324.0	0.019	0.0	0.000
Zinc	28,000.0	136.986	112,000.0	6.643	0.0	0.000
Aluminum	3,790,000.0	18,542.074	4,600,000.0	272.835	87,800.0	5.099
Oil and Grease	5,210.0	25.489	200,000.0	11.862	224,000.0	13.008
TSS	30,700.0	150.196	5,810,000.0	344.603	207,000.0	12.021

Table X-20 (Continued)

PRODUCTION NORMALIZED RAW WASTE VALUES AND CONCENTRATIONS FOR ALUMINUM FORMING WASTEWATER STREAMS

Pollutant	Direct Chill Casting Contact Cooling Water		Degassing Scrubber Liquor		Forging Scrubber Liquor	
	mg/kkg	mg/l	mg/kkg	mg/l	mg/kkg	mg/l
Cadmium	2.2	0.001	0.0	0.000	0.0	0.000
Chromium	61.6	0.031	0.0	0.000	0.0	0.000
Copper	121.0	0.061	2.9	0.099	15.5	0.010
Cyanide	50.6	0.025	40.9	1.401	17.0	0.011
Lead	382.0	0.191	0.0	0.000	3,090.0	1.997
Nickel	0.3	0.000	4.1	0.140	0.0	0.000
Zinc	1,060.0	0.530	5.8	0.199	464.0	0.300
Aluminum	9,880.0	4.942	---	---	774.0	0.500
Oil and Grease	355,000.0	177.589	---	---	251,000.0	162.250
TSS	664,000.0	332.166	---	---	3,090.0	1.997

Pollutant	Continuous Rod Casting Contact Cooling Water		Continuous Rod Casting Spent Lubricant	
	mg/kkg	mg/l	mg/kkg	mg/l
Cadmium	2.2	0.002	0.1	0.054
Chromium	141.0	0.135	0.5	0.271
Copper	10.4	0.010	5.0	2.713
Cyanide	9.2	0.009	0.1	0.054
Lead	25.0	0.024	26.3	14.270
Nickel	0.8	0.001	0.5	0.271
Zinc	206.0	0.198	4.7	2.550
Aluminum	418.0	0.401	164.0	88.985
Oil and Grease	76,900.0	73.800	32,300.0	17,525.773
TSS	58,200.0	55.854	3,690.0	2,002.170

Table X-21

TTO - EVALUATION OF OIL TREATMENT EFFECTIVENESS ON TOXICS REMOVAL

Pollutant Parameter		Influent Concentration (mg/l)	Effluent Concentration (mg/l)
001	acenaphthene	5.7	ND
038	ethylbenzene	0.089	0.01
055	naphthalene	0.75	0.23
062	N-nitrosodiphenylamine	1.5	0.091
065	phenol	0.18	0.04
066	bis(2-ethylhexyl)phthalate	1.25	0.01
068	di-n-butyl phthalate	1.27	0.019
078/081	anthracene/phenanthrene	2.0	0.1
080	fluorene	0.76	0.035
084	pyrene	0.075	0.01
085	tetrachloroethylene	4.2	0.1
086	toluene	0.16	0.02
087	trichloroethylene	4.8	0.01
097	endosulfan sulfate	0.012	ND
098	endrin	0.066	0.005
107	PCB-1254 (a)	1.1	0.005
110	PCB-1248 (b)	1.8	0.005
	(mg/l)	25.7	0.690

a: PBC-1242, PCB-1254, PCB-1221, PCB-1232 reported together.

b: PBC-1248, PCB-1260, PCB-1016 reported together.

Table X-22

PRODUCTION OPERATIONS - ROLLING WITH NEAT OILS SUBCATEGORY

Operation	Waste Stream	Normalized BAT Discharge 1/kkg	(gpt)	Production Normalizing Parameter
Core				
Rolling with neat oils	Spent lubricant	0	(0)	
Roll grinding	Spent emulsion	8.770	(2.103)	Mass of aluminum rolled with neat oil
Stationary casting	None	0	(0)	
Homogenizing	None	0	(0)	
Artificial aging	None	0	(0)	
Degreasing	Spent solvents	0	(0)	
Sawing	Spent lubricant	4.807	(1.153)	Mass of aluminum rolled with neat oil
Miscellaneous nondescript wastewater sources	Various	3	(0.720)	Mass of aluminum rolled with neat oil
	Total core without an annealing furnace scrubber	16.58	(3.976)	
Annealing	Atmosphere scrubber liquor	26.35	(6.320)	Mass of aluminum rolled with neat oil
	Total core with an annealing furnace scrubber	42.93	(10.30)	

Table X-22 (Continued)

PRODUCTION OPERATIONS - ROLLING WITH NEAT OILS SUBCATEGORY

Operation	Waste Stream	Normalized BAT Discharge l/kkg	(gpt)	Production Normalizing Parameter
Ancillary				
Continuous sheet casting	Spent lubricant	1.843	(0.442)	Mass of aluminum cast by continuous methods
Solution heat treatment	Contact cooling water	2,037	(488.5)	Mass of aluminum quenched
Cleaning or etching	Bath	0	(0)	Mass of aluminum cleaned or etched
	Rinse	1,686	(404.4)	Mass of aluminum cleaned or etched
	Scrubber liquor	1,933	(463.5)	Mass of aluminum cleaned or etched

Table X-23

BAT MASS LIMITATIONS FOR THE ROLLING WITH NEAT OILS SUBCATEGORY

Rolling With Neat Oils - Core Waste Streams Without An Annealing Furnace Scrubber

	Pollutant or Pollutant Property	Maximum for Any One Day	Maximum for Monthly Average
	mg/kkg (lb/billion lbs) of aluminum rolled with neat oils		
118	Cadmium	5.31	2.49
119	Chromium	6.96	2.82
120	Copper	31.50	16.58
121	Cyanide	4.81	1.99
122	Lead	2.49	2.16
124	Nickel	23.38	16.58
125	Selenium	19.90	9.95
128	Zinc	22.05	9.28
	Aluminum	75.44	30.84
	Oil & Grease	331.60	198.96
	Total Suspended Solids	679.78	331.60
	pH	Within the range of 7.5 to 10.0 at all times.	

Rolling With Neat Oils - Core Waste Streams With An Annealing Furnace Scrubber

	Pollutant or Pollutant Property	Maximum for Any One Day	Maximum for Monthly Average
	mg/kkg (lb/billion lbs) of aluminum rolled with neat oils		
118	Cadmium	13.74	6.44
119	Chromium	18.03	7.30
120	Copper	81.57	42.93
121	Cyanide	12.45	5.15
122	Lead	6.44	5.58
124	Nickel	60.53	42.93
125	Selenium	51.52	25.76
128	Zinc	57.10	24.04
	Aluminum	195.33	79.85
	Oil & Grease	858.60	515.16
	Total Suspended Solids	1,760.13	858.60
	pH	Within the range of 7.5 to 10.0 at all times.	

Table X-23 (Continued)

BAT MASS LIMITATIONS FOR THE ROLLING WITH NEAT OILS SUBCATEGORY

Continuous Sheet Casting - Spent Lubricant

Pollutant or Pollutant Property		Maximum for Any One Day	Maximum for Monthly Average
		mg/kkg (lb/billion lbs) of aluminum cast by continuous methods	
118	Cadmium	0.59	0.28
119	Chromium	0.77	0.31
120	Copper	3.50	1.84
121	Cyanide	0.53	0.22
122	Lead	0.28	0.24
124	Nickel	2.60	1.84
125	Selenium	2.21	1.11
128	Zinc	2.45	1.03
	Aluminum	8.39	3.43
	Oil & Grease	36.86	22.12
	Total Suspended Solids	75.56	36.86
	pH	Within the range of 7.5 to 10.0 at all times.	

Solution Heat Treatment - Contact Cooling Water

Pollutant or Pollutant Property		Maximum for Any One Day	Maximum for Monthly Average
		mg/kkg (lb/billion lbs) of aluminum quenched	
118	Cadmium	651.84	305.55
119	Chromium	855.54	346.29
120	Copper	3,870.30	2,037.00
121	Cyanide	590.73	244.44
122	Lead	305.55	264.81
124	Nickel	2,872.17	2,037.00
125	Selenium	2,444.40	1,222.20
128	Zinc	2,709.21	1,140.72
	Aluminum	9,268.35	3,788.82
	Oil & Grease	40,740.00	24,444.00
	Total Suspended Solids	83,517.00	40,740.00
	pH	Within the range of 7.5 to 10.0 at all times.	

Table X-23 (Continued)

BAT MASS LIMITATIONS FOR THE ROLLING WITH NEAT OILS SUBCATEGORY

Cleaning or Etching - Bath

	Pollutant or Pollutant Property	Maximum for Any One Day	Maximum for Monthly Average
		mg/kkg (lb/billion lbs) of aluminum cleaned or etched	
118	Cadmium	0.00	0.00
119	Chromium	0.00	0.00
120	Copper	0.00	0.00
121	Cyanide	0.00	0.00
122	Lead	0.00	0.00
124	Nickel	0.00	0.00
125	Selenium	0.00	0.00
128	Zinc	0.00	0.00
	Aluminum	0.00	0.00
	Oil & Grease	0.00	0.00
	Total Suspended Solids	0.00	0.00
	pH	Within the range of 7.5 to 10.0 at all times.	

Cleaning or Etching - Rinse

	Pollutant or Pollutant Property	Maximum for Any One Day	Maximum for Monthly Average
		mg/kkg (lb/billion lbs) of aluminum cleaned or etched	
118	Cadmium	539.52	252.90
119	Chromium	708.12	286.62
120	Copper	3,203.40	1,686.00
121	Cyanide	488.94	202.32
122	Lead	252.90	219.18
124	Nickel	2,377.26	1,686.00
125	Selenium	2,023.20	1,011.60
128	Zinc	2,242.38	944.16
	Aluminum	7,671.30	3,135.96
	Oil & Grease	33,720.00	20,232.00
	Total Suspended Solids	69,126.00	33,720.00
	pH	Within the range of 7.5 to 10.0 at all times.	

Table X-23 (Continued)

BAT MASS LIMITATIONS FOR THE ROLLING WITH NEAT OILS SUBCATEGORY

Cleaning or Etching - Scrubber Liquor

Pollutant or Pollutant Property		Maximum for Any One Day	Maximum for Monthly Average
	mg/kkg (lb/billion lbs) of aluminum cleaned or etched		
118	Cadmium	618.56	289.95
119	Chromium	811.86	328.61
120	Copper	3,672.70	1,933.00
121	Cyanide	560.57	231.96
122	Lead	289.95	251.29
124	Nickel	2,725.53	1,933.00
125	Selenium	2,319.60	1,159.80
128	Zinc	2,570.89	1,082.48
	Aluminum	8,795.15	3,595.38
	Oil & Grease	38,660.00	23,196.00
	Total Suspended Solids	79,253.00	38,660.00
	pH	Within the range of 7.5 to 10.0 at all times.	

Table X-24

PRODUCTION OPERATIONS - ROLLING WITH EMULSIONS SUBCATEGORY

Operation	Waste Stream	Normalized BAT Discharge l/kkg	(gpt)	Production Normalizing Parameter
Core				
Rolling with emulsions	Spent emulsion	74.51	(17.87)	Mass of aluminum rolled with emulsions
Roll grinding	Spent emulsion	8.770	(2.103)	Mass of aluminum rolled with emulsions
Annealing	None	0	(0)	
Stationary casting	None	0	(0)	
Homogenizing	None	0	(0)	
Artificial aging	None	0	(0)	
Degreasing	None	0	(0)	
Sawing	Spent lubricant	4.807	(1.153)	Mass of aluminum rolled with emulsions
Miscellaneous nondescript wastewater sources	Various	3	(0.720)	Mass of aluminum rolled with emulsions
	Total Core	91.09	(21.85)	
Ancillary				
Direct chill casting	Contact cooling water	1,999	(479.4)	Mass of aluminum cast by direct chill method
Solution heat treatment	Contact cooling water	2,037	(488.5)	Mass of aluminum quenched
Cleaning or etching	Bath	0	(0)	Mass of aluminum cleaned or etched
	Rinse	1,686	(404.4)	Mass of aluminum cleaned or etched
	Scrubber Liquor	1,933	(463.5)	Mass of aluminum cleaned or etched

Table X-25

BAT MASS LIMITATIONS FOR THE ROLLING WITH EMULSIONS SUBCATEGORY

Rolling With Emulsions - Core Waste Streams

Pollutant or Pollutant Property		Maximum for Any One Day	Maximum for Monthly Average
mg/kkg (lb/billion lbs) of aluminum rolled with emulsions			
118	Cadmium	29.15	13.66
119	Chromium	38.26	15.49
120	Copper	173.07	91.09
121	Cyanide	26.42	10.93
122	Lead	13.66	11.84
124	Nickel	128.44	91.09
125	Selenium	109.31	54.65
128	Zinc	121.15	51.01
	Aluminum	414.46	169.43
	Oil & Grease	1,821.80	1,093.08
	Total Suspended Solids	3,734.69	1,821.80
	pH	Within the range of 7.5 to 10.0 at all times.	

Direct Chill Casting - Contact Cooling Water

Pollutant or Pollutant Property		Maximum for Any One Day	Maximum for Monthly Average
mg/kkg (lb/billion lbs) of aluminum cast by direct chill methods			
118	Cadmium	639.68	299.85
119	Chromium	839.58	339.83
120	Copper	3,798.10	1,999.00
121	Cyanide	579.71	239.88
122	Lead	299.85	259.87
124	Nickel	2,818.59	1,999.00
125	Selenium	2,398.80	1,199.40
128	Zinc	2,658.67	1,119.44
	Aluminum	9,095.45	3,718.14
	Oil & Grease	39,980.00	23,988.00
	Total Suspended Solids	81,959.00	39,980.00
	pH	Within the range of 7.5 to 10.0 at all times.	

Table X-25 (Continued)

BAT MASS LIMITATIONS FOR THE ROLLING WITH EMULSIONS SUBCATEGORY

Solution Heat Treatment - Contact Cooling Water

	Pollutant or Pollutant Property	Maximum for Any One Day	Maximum for Monthly Average
		mg/kkg (lb/billion lbs) of aluminum quenched	
118	Cadmium	651.84	305.55
119	Chromium	855.54	346.29
120	Copper	3,870.30	2,037.00
121	Cyanide	590.73	244.44
122	Lead	305.55	264.81
124	Nickel	2,872.17	2,037.00
125	Selenium	2,444.40	1,222.20
128	Zinc	2,709.21	1,140.72
	Aluminum	9,268.35	3,788.82
	Oil & Grease	40,740.00	24,444.00
	Total Suspended Solids	83,517.00	40,740.00
	pH	Within the range of 7.5 to 10.0 at all times.	

Cleaning or Etching - Bath

	Pollutant or Pollutant Property	Maximum for Any One Day	Maximum for Monthly Average
		mg/kkg (lb/billion lbs) of aluminum cleaned or etched	
118	Cadmium	0.00	0.00
119	Chromium	0.00	0.00
120	Copper	0.00	0.00
121	Cyanide	0.00	0.00
122	Lead	0.00	0.00
124	Nickel	0.00	0.00
125	Selenium	0.00	0.00
128	Zinc	0.00	0.00
	Aluminum	0.00	0.00
	Oil & Grease	0.00	0.00
	Total Suspended Solids	0.00	0.00
	pH	Within the range of 7.5 to 10.0 at all times.	

Table X-25 (Continued)

BAT MASS LIMITATIONS FOR THE ROLLING WITH EMULSIONS SUBCATEGORY

Cleaning or Etching - Rinse

	Pollutant or Pollutant Property	Maximum for Any One Day	Maximum for Monthly Average
	mg/kkg (lb/billion lbs) of aluminum cleaned or etched		
118	Cadmium	539.52	252.90
119	Chromium	708.12	286.62
120	Copper	3,203.40	1,686.00
121	Cyanide	488.94	202.32
122	Lead	252.90	219.18
124	Nickel	2,377.26	1,686.00
125	Selenium	2,023.20	1,011.60
128	Zinc	2,242.38	944.16
	Aluminum	7,671.30	3,135.96
	Oil & Grease	33,720.00	20,232.00
	Total Suspended Solids	69,126.00	33,720.00
	pH	Within the range of 7.5 to 10.0 at all times.	

Cleaning or Etching - Scrubber Liquor

	Pollutant or Pollutant Property	Maximum for Any One Day	Maximum for Monthly Average
	mg/kkg (lb/billion lbs) of aluminum cleaned or etched		
118	Cadmium	618.56	289.95
119	Chromium	811.86	328.61
120	Copper	3,672.70	1,933.00
121	Cyanide	560.57	231.96
122	Lead	289.95	251.29
124	Nickel	2,725.53	1,933.00
125	Selenium	2,319.60	1,159.80
128	Zinc	2,570.89	1,082.48
	Aluminum	8,795.15	3,595.38
	Oil & Grease	38,660.00	23,196.00
	Total Suspended Solids	79,253.00	38,660.00
	pH	Within the range of 7.5 to 10.0 at all times.	

Table X-26

PRODUCTION OPERATIONS - EXTRUSION SUBCATEGORY

Operation	Waste Stream	Normalized BAT Discharge 1/kkg	(gpt)	Production Normalizing Parameter
Core				
Extrusion	Die cleaning bath and rinse	14.78	(3.544)	Mass of aluminum extruded
	Die cleaning scrubber liquor	275.5	(66.08)	Mass of aluminum extruded
	Dummy block cooling	0	(0)	
Annealing	None	0	(0)	
Stationary casting	None	0	(0)	
Homogenizing	None	0	(0)	
Artificial aging	None	0	(0)	
Degreasing	Spent solvent	0	(0)	
Sawing	Spent lubricant	4.807	(1.153)	Mass of aluminum extruded
Miscellaneous nondescript wastewater sources	Various	3	(0.720)	Mass of aluminum extruded
	Total Core	298.1	(71.50)	
Ancillary				
Direct chill casting	Contact cooling water	1,999	(479.4)	Mass of aluminum cast by direct chill method
Solution and press heat treatment	Contact cooling water	2,037	(488.5)	Mass of aluminum quenched
Cleaning or etching	Bath	0	(0)	Mass of aluminum cleaned or etched
	Rinse	1,686	(404.4)	Mass of aluminum cleaned or etched
	Scrubber liquor	1,933	(463.5)	Mass of aluminum cleaned or etched
Degassing	Scrubber liquor	0	(0)	Mass of aluminum degassed

Table X-27

BAT MASS LIMITATIONS FOR THE EXTRUSION SUBCATEGORY

Extrusion - Core Waste Streams

Pollutant or Pollutant Property		Maximum for Any One Day	Maximum for Monthly Average
		mg/kkg (lb/billion lbs) of aluminum extruded	
118	Cadmium	95.39	44.72
119	Chromium	125.20	50.68
120	Copper	566.39	298.10
121	Cyanide	86.45	35.77
122	Lead	44.72	38.75
124	Nickel	420.32	298.10
125	Selenium	357.72	178.86
128	Zinc	396.47	166.94
	Aluminum	1,356.36	554.47
	Oil & Grease	5,962.00	3,577.20
	Total Suspended Solids	12,222.10	5,962.00
	pH	Within the range of 7.5 to 10.0 at all times.	

Direct Chill Casting - Contact Cooling Water

Pollutant or Pollutant Property		Maximum for Any One Day	Maximum for Monthly Average
		mg/kkg (lb/billion lbs) of aluminum cast by direct chill methods	
118	Cadmium	639.68	299.85
119	Chromium	839.58	339.83
120	Copper	3,798.10	1,999.00
121	Cyanide	579.71	239.88
122	Lead	299.85	259.87
124	Nickel	2,818.59	1,999.00
125	Selenium	2,398.80	1,199.40
128	Zinc	2,658.67	1,119.44
	Aluminum	9,095.45	3,718.14
	Oil & Grease	39,980.00	23,988.00
	Total Suspended Solids	81,959.00	39,980.00
	pH	Within the range of 7.5 to 10.0 at all times.	

Table X-27 (Continued)

BAT MASS LIMITATIONS FOR THE EXTRUSION SUBCATEGORY

Solution and Press Heat Treatment - Contact Cooling Water

Pollutant or Pollutant Property		Maximum for Any One Day	Maximum for Monthly Average
		mg/kkg (lb/billion lbs) of aluminum quenched	
118	Cadmium	651.84	305.55
119	Chromium	855.54	346.29
120	Copper	3,870.30	2,037.00
121	Cyanide	590.73	244.44
122	Lead	305.55	264.81
124	Nickel	2,872.17	2,037.00
125	Selenium	2,444.40	1,222.20
128	Zinc	2,709.21	1,140.72
	Aluminum	9,268.35	3,788.82
	Oil & Grease	40,740.00	24,444.00
	Total Suspended Solids	83,517.00	40,740.00
	pH	Within the range of 7.5 to 10.0 at all times.	

Cleaning or Etching - Bath

Pollutant or Pollutant Property		Maximum for Any One Day	Maximum for Monthly Average
		mg/kkg (lb/billion lbs) of aluminum cleaned or etched	
118	Cadmium	0.00	0.00
119	Chromium	0.00	0.00
120	Copper	0.00	0.00
121	Cyanide	0.00	0.00
122	Lead	0.00	0.00
124	Nickel	0.00	0.00
125	Selenium	0.00	0.00
128	Zinc	0.00	0.00
	Aluminum	0.00	0.00
	Oil & Grease	0.00	0.00
	Total Suspended Solids	0.00	0.00
	pH	Within the range of 7.5 to 10.0 at all times.	

Table X-27 (Continued)

BAT MASS LIMITATIONS FOR THE EXTRUSION SUBCATEGORY

Cleaning or Etching - Rinse

Pollutant or Pollutant Property		Maximum for Any One Day	Maximum for Monthly Average
		mg/kkg (lb/billion lbs) of aluminum cleaned or etched	
118	Cadmium	539.52	252.90
119	Chromium	708.12	286.62
120	Copper	3,203.40	1,686.00
121	Cyanide	488.94	202.32
122	Lead	252.90	219.18
124	Nickel	2,377.26	1,686.00
125	Selenium	2,023.20	1,011.60
128	Zinc	2,242.38	944.16
	Aluminum	7,671.30	3,135.96
	Oil & Grease	33,720.00	20,232.00
	Total Suspended Solids	69,126.00	33,720.00
	pH	Within the range of 7.5 to 10.0 at all times.	

Cleaning or Etching - Scrubber Liquor

Pollutant or Pollutant Property		Maximum for Any One Day	Maximum for Monthly Average
		mg/kkg (lb/billion lbs) of aluminum cleaned or etched	
118	Cadmium	618.56	289.95
119	Chromium	811.86	328.61
120	Copper	3,672.70	1,933.00
121	Cyanide	560.57	231.96
122	Lead	289.95	251.29
124	Nickel	2,725.53	1,933.00
125	Selenium	2,319.60	1,159.80
128	Zinc	2,570.89	1,082.48
	Aluminum	8,795.15	3,595.38
	Oil & Grease	38,660.00	23,196.00
	Total Suspended Solids	79,253.00	38,660.00
	pH	Within the range of 7.5 to 10.0 at all times.	

Table X-27 (Continued)

BAT MASS LIMITATIONS FOR THE EXTRUSION SUBCATEGORY

Degassing - Scrubber Liquor

Pollutant or Pollutant Property		Maximum for Any One Day	Maximum for Monthly Average
		mg/kkg (lb/billion lbs) of aluminum degassed	
118	Cadmium	0.00	0.00
119	Chromium	0.00	0.00
120	Copper	0.00	0.00
121	Cyanide	0.00	0.00
122	Lead	0.00	0.00
124	Nickel	0.00	0.00
125	Selenium	0.00	0.00
128	Zinc	0.00	0.00
	Aluminum	0.00	0.00
	Oil & Grease	0.00	0.00
	Total Suspended Solids	0.00	0.00
	pH	Within the range of 7.5 to 10.0 at all times.	

Table X-28

PRODUCTION OPERATIONS - FORGING SUBCATEGORY

Operation	Waste Stream	Normalized BAT Discharge 1/kkg	(gpt)	Production Normalizing Parameter
Core				
Forging	None	0	(0)	
Annealing	None	0	(0)	
Artificial aging	None	0	(0)	
Degreasing	Spent solvent	0	(0)	
Sawing	Spent lubricant	4.807	(1.153)	Mass of aluminum forged
Miscellaneous nondescript wastewater sources	Various	3	(0.720)	Mass of aluminum forged
	Total Core	7.807	(1.873)	
Ancillary				
Forging	Scrubber liquor	94.31	(22.65)	Mass of aluminum forged
Solution heat treatment	Contact cooling water	2,037	(488.5)	Mass of aluminum quenched
Cleaning or etching	Bath	0	(0)	Mass of aluminum cleaned or etched
	Rinse	1,686	(404.4)	Mass of aluminum cleaned or etched
	Scrubber liquor	1,933	(463.5)	Mass of aluminum cleaned or etched

Table X-29

BAT MASS LIMITATIONS FOR THE FORGING SUBCATEGORY

Forging - Core Waste Streams

Pollutant or Pollutant Property		Maximum for Any One Day	Maximum for Monthly Average
		mg/kkg (lb/billion lbs) of aluminum forged	
118	Cadmium	2.50	1.17
119	Chromium	3.28	1.33
120	Copper	14.83	7.81
121	Cyanide	2.26	0.94
122	Lead	1.17	1.01
124	Nickel	11.01	7.81
125	Selenium	9.37	4.68
128	Zinc	10.38	4.37
	Aluminum	35.52	14.52
	Oil & Grease	156.14	93.68
	Total Suspended Solids	320.09	156.14
	pH	Within the range of 7.5 to 10.0 at all times.	

Forging - Scrubber Liquor

Pollutant or Pollutant Property		Maximum for Any One Day	Maximum for Monthly Average
		mg/kkg (lb/billion lbs) of aluminum forged	
118	Cadmium	30.18	14.15
119	Chromium	39.61	16.03
120	Copper	179.19	94.31
121	Cyanide	27.35	11.32
122	Lead	14.15	12.26
124	Nickel	132.98	94.31
125	Selenium	113.17	56.59
128	Zinc	125.43	52.81
	Aluminum	429.11	175.42
	Oil & Grease	1,886.20	1,131.72
	Total Suspended Solids	3,866.71	1,886.20
	pH	Within the range of 7.5 to 10.0 at all times.	

Table X-29 (Continued)

BAT MASS LIMITATIONS FOR THE FORGING SUBCATEGORY

Solution Heat Treatment - Contact Cooling Water

Pollutant or Pollutant Property		Maximum for Any One Day	Maximum for Monthly Average
		mg/kkg (lb/billion lbs) of aluminum quenched	
118	Cadmium	651.84	305.55
119	Chromium	855.54	346.29
120	Copper	3,870.30	2,037.00
121	Cyanide	590.73	244.44
122	Lead	305.55	264.81
124	Nickel	2,872.17	2,037.00
125	Selenium	2,444.40	1,222.20
128	Zinc	2,709.21	1,140.72
	Aluminum	9,268.35	3,788.82
	Oil & Grease	40,740.00	24,444.00
	Total Suspended Solids	83,517.00	40,740.00
	pH	Within the range of 7.5 to 10.0 at all times.	

Cleaning or Etching - Bath

Pollutant or Pollutant Property		Maximum for Any One Day	Maximum for Monthly Average
		mg/kkg (lb/billion lbs) of aluminum cleaned or etched	
118	Cadmium	0.00	0.00
119	Chromium	0.00	0.00
120	Copper	0.00	0.00
121	Cyanide	0.00	0.00
122	Lead	0.00	0.00
124	Nickel	0.00	0.00
125	Selenium	0.00	0.00
128	Zinc	0.00	0.00
	Aluminum	0.00	0.00
	Oil & Grease	0.00	0.00
	Total Suspended Solids	0.00	0.00
	pH	Within the range of 7.5 to 10.0 at all times.	

Table X-29 (Continued)

BAT MASS LIMITATIONS FOR THE FORGING SUBCATEGORY

Cleaning or Etching - Rinse

	Pollutant or Pollutant Property	Maximum for Any One Day	Maximum for Monthly Average
	mg/kkg (lb/billion lbs) of aluminum cleaned or etched		
118	Cadmium	539.52	252.90
119	Chromium	708.12	286.62
120	Copper	3,203.40	1,686.00
121	Cyanide	488.94	202.32
122	Lead	252.90	219.18
124	Nickel	2,377.26	1,686.00
125	Selenium	2,023.20	1,011.60
128	Zinc	2,242.38	944.16
	Aluminum	7,671.30	3,135.96
	Oil & Grease	33,720.00	20,232.00
	Total Suspended Solids	69,126.00	33,720.00
	pH	Within the range of 7.5 to 10.0 at all times.	

Cleaning or Etching - Scrubber Liquor

	Pollutant or Pollutant Property	Maximum for Any One Day	Maximum for Monthly Average
	mg/kkg (lb/billion lbs) of aluminum cleaned or etched		
118	Cadmium	618.56	289.95
119	Chromium	811.86	328.61
120	Copper	3,672.70	1,933.00
121	Cyanide	560.57	231.96
122	Lead	289.95	251.29
124	Nickel	2,725.53	1,933.00
125	Selenium	2,319.60	1,159.80
128	Zinc	2,570.89	1,082.48
	Aluminum	8,795.15	3,595.38
	Oil & Grease	38,660.00	23,196.00
	Total Suspended Solids	79,253.00	38,660.00
	pH	Within the range of 7.5 to 10.0 at all times.	

Table X-30

PRODUCTION OPERATIONS - DRAWING WITH NEAT OILS SUBCATEGORY

Operation	Waste Stream	Normalized BAT Discharge l/kkg	Normalized BAT Discharge (gpt)	Production Normalizing Parameter
Core				
Drawing with neat oils	Spent oils	0	(0)	
Annealing	None	0	(0)	
Stationary casting	None	0	(0)	
Homogenizing	None	0	(0)	
Artificial aging	None	0	(0)	
Degreasing	Spent solvent	0	(0)	
Sawing	Spent lubricant	4.807	(1.153)	Mass of aluminum drawn with neat oils
Swaging	None	0	(0)	
Miscellaneous nondescript wastewater sources	Various	3	(0.720)	Mass of aluminum drawn with neat oils
	Total Core	7.807	(1.873)	
Ancillary				
Continous rod casting	Contact cooling water	104.2	(24.99)	Mass of rod cast by continuous method
	Spent lubricant	1.843	(0.442)	Mass of rod cast by continuous method
Solution heat treatment	Contact cooling water	2,037	(488.5)	Mass of aluminum quenched
Cleaning or etching	Bath	0	(0)	Mass of aluminum cleaned or etched
	Rinse	1,686	(404.4)	Mass of aluminum cleaned or etched
	Scrubber liquor	1,933	(463.5)	Mass of aluminum cleaned or etched

Table X-31

BAT MASS LIMITATIONS FOR THE DRAWING WITH NEAT OILS SUBCATEGORY

Drawing With Neat Oils - Core Waste Streams

	Pollutant or Pollutant Property	Maximum for Any One Day	Maximum for Monthly Average
	mg/kkg (lb/billion lbs) of aluminum drawn with neat oils		
118	Cadmium	2.50	1.17
119	Chromium	3.28	1.33
120	Copper	14.83	7.81
121	Cyanide	2.26	0.94
122	Lead	1.17	1.01
124	Nickel	11.01	7.81
125	Selenium	9.37	4.68
128	Zinc	10.38	4.37
	Aluminum	35.52	14.52
	Oil & Grease	156.14	93.68
	Total Suspended Solids	320.09	156.14
	pH	Within the range of 7.5 to 10.0 at all times.	

Continuous Rod Casting - Contact Cooling Water

	Pollutant or Pollutant Property	Maximum for Any One Day	Maximum for Monthly Average
	mg/kkg (lb/billion lbs) of aluminum cast by continuous methods		
118	Cadmium	33.34	15.63
119	Chromium	43.76	17.71
120	Copper	197.98	104.20
121	Cyanide	30.22	12.50
122	Lead	15.63	13.55
124	Nickel	146.92	104.20
125	Selenium	125.04	62.52
128	Zinc	138.59	58.35
	Aluminum	474.11	193.81
	Oil & Grease	2,084.00	1,250.40
	Total Suspended Solids	4,272.20	2,084.00
	pH	Within the range of 7.5 to 10.0 at all times.	

Table X-31 (Continued)

BAT MASS LIMITATIONS FOR THE DRAWING WITH NEAT OILS SUBCATEGORY

Continuous Rod Casting - Spent Lubricant

Pollutant or Pollutant Property		Maximum for Any One Day	Maximum for Monthly Average
mg/kkg (lb/billion lbs) of aluminum cast by continuous methods			
118	Cadmium	0.59	0.28
119	Chromium	0.77	0.31
120	Copper	3.50	1.84
121	Cyanide	0.53	0.22
122	Lead	0.28	0.24
124	Nickel	2.60	1.84
125	Selenium	2.21	1.11
128	Zinc	2.45	1.03
	Aluminum	8.39	3.43
	Oil & Grease	36.86	22.12
	Total Suspended Solids	75.56	36.86
	pH	Within the range of 7.5 to 10.0 at all times.	

Solution Heat Treatment - Contact Cooling Water

Pollutant or Pollutant Property		Maximum for Any One Day	Maximum for Monthly Average
mg/kkg (lb/billion lbs) of aluminum quenched			
118	Cadmium	651.84	305.55
119	Chromium	855.54	346.29
120	Copper	3,870.30	2,037.00
121	Cyanide	590.73	244.44
122	Lead	305.55	264.81
124	Nickel	2,872.17	2,037.00
125	Selenium	2,444.40	1,222.20
128	Zinc	2,709.21	1,140.72
	Aluminum	9,268.35	3,788.82
	Oil & Grease	40,740.00	24,444.00
	Total Suspended Solids	83,517.00	40,740.00
	pH	Within the range of 7.5 to 10.0 at all times.	

Table X-31 (Continued)

BAT MASS LIMITATIONS FOR THE DRAWING WITH NEAT OILS SUBCATEGORY

Cleaning or Etching - Bath

Pollutant or Pollutant Property		Maximum for Any One Day	Maximum for Monthly Average
	mg/kkg (lb/billion lbs) of aluminum cleaned or etched		
118	Cadmium	0.00	0.00
119	Chromium	0.00	0.00
120	Copper	0.00	0.00
121	Cyanide	0.00	0.00
122	Lead	0.00	0.00
124	Nickel	0.00	0.00
125	Selenium	0.00	0.00
128	Zinc	0.00	0.00
	Aluminum	0.00	0.00
	Oil & Grease	0.00	0.00
	Total Suspended Solids	0.00	0.00
	pH	Within the range of 7.5 to 10.0 at all times.	

Cleaning or Etching - Rinse

Pollutant or Pollutant Property		Maximum for Any One Day	Maximum for Monthly Average
	mg/kkg (lb/billion lbs) of aluminum cleaned or etched		
118	Cadmium	539.52	252.90
119	Chromium	708.12	286.62
120	Copper	3,203.40	1,686.00
121	Cyanide	488.94	202.32
122	Lead	252.90	219.18
124	Nickel	2,377.26	1,686.00
125	Selenium	2,023.20	1,011.60
128	Zinc	2,242.38	944.16
	Aluminum	7,671.30	3,135.96
	Oil & Grease	33,720.00	20,232.00
	Total Suspended Solids	69,126.00	33,720.00
	pH	Within the range of 7.5 to 10.0 at all times.	

Table X-31 (Continued)

BAT MASS LIMITATIONS FOR THE DRAWING WITH NEAT OILS SUBCATEGORY

Cleaning or Etching - Scrubber Liquor

	Pollutant or Pollutant Property	Maximum for Any One Day	Maximum for Monthly Average
	mg/kkg (lb/billion lbs) of aluminum cleaned or etched		
118	Cadmium	618.56	289.95
119	Chromium	811.86	328.61
120	Copper	3,672.70	1,933.00
121	Cyanide	560.57	231.96
122	Lead	289.95	251.29
124	Nickel	2,725.53	1,933.00
125	Selenium	2,319.60	1,159.80
128	Zinc	2,570.89	1,082.48
	Aluminum	8,795.15	3,595.38
	Oil & Grease	38,660.00	23,196.00
	Total Suspended Solids	79,253.00	38,660.00
	pH	Within the range of 7.5 to 10.0 at all times.	

Table X-32

PRODUCTION OPERATIONS - DRAWING WITH EMULSIONS OR SOAPS SUBCATEGORY

Operation	Waste Stream	Normalized BAT Discharge l/kkg	Normalized BAT Discharge (gpt)	Production Normalizing Parameter
Core				
Drawing with emulsions or soaps	Spent lubricants	416.5	(99.89)	Mass of aluminum drawn with emulsions or soaps
Annealing	None	0	(0)	
Stationary casting	None	0	(0)	
Homogenizing	None	0	(0)	
Artificial aging	None	0	(0)	
Degreasing	Spent solvent	0	(0)	
Sawing	Spent lubricant	4.807	(1.153)	Mass of aluminum drawn with emulsions or soaps
Swaging	None	0	(0)	
Miscellaneous nondescript wastewater sources	Various	3	(0.720)	Mass of aluminum drawn with emulsions or soaps
	Total Core	424.3	(101.8)	
Ancillary				
Continuous rod casting	Contact cooling water	104.2	(24.99)	Mass of rod cast by continuous methods
	Spent lubricant	1.843	(0.442)	Mass of rod cast by continuous methods
Solution heat treatment	Contact cooling water	2,037	(488.5)	Mass of aluminum quenched
Cleaning or etching	Bath	0	(0)	Mass of aluminum cleaned or etched
	Rinse	1,686	(404.4)	Mass of aluminum cleaned or etched
	Scrubber liquor	1,933	(463.5)	Mass of aluminum cleaned or etched

Table X-33

BAT MASS LIMITATIONS FOR THE DRAWING WITH EMULSIONS OR SOAPS SUBCATEGORY

Drawing With Emulsions or Soaps - Core Waste Streams

Pollutant or Pollutant Property		Maximum for Any One Day	Maximum for Monthly Average
mg/kkg (lb/billion lbs) of aluminum drawn with emulsions or soaps			
118	Cadmium	135.78	63.65
119	Chromium	178.21	72.13
120	Copper	806.17	424.30
121	Cyanide	123.05	50.92
122	Lead	63.65	55.16
124	Nickel	598.26	424.30
125	Selenium	509.16	254.58
128	Zinc	564.32	237.61
	Aluminum	1,930.57	789.20
	Oil & Grease	8,486.00	5,091.60
	Total Suspended Solids	17,396.30	8,486.00
	pH	Within the range of 7.5 to 10.0 at all times.	

Continuous Rod Casting - Contact Cooling Water

Pollutant or Pollutant Property		Maximum for Any One Day	Maximum for Monthly Average
mg/kkg (lb/billion lbs) of aluminum cast by continuous methods			
118	Cadmium	33.34	15.63
119	Chromium	43.76	17.71
120	Copper	197.98	104.20
121	Cyanide	30.22	12.50
122	Lead	15.63	13.55
124	Nickel	146.93	104.20
125	Selenium	125.04	62.52
128	Zinc	138.59	58.35
	Aluminum	474.11	193.81
	Oil & Grease	2,084.00	1,250.40
	Total Suspended Solids	4,272.20	2,084.00
	pH	Within the range of 7.5 to 10.0 at all times.	

Table X-33 (Continued)

BAT MASS LIMITATIONS FOR THE DRAWING WITH EMULSIONS OR SOAPS SUBCATEGORY

Continuous Rod Casting - Spent Lubricant

	Pollutant or Pollutant Property	Maximum for Any One Day	Maximum for Monthly Average
	mg/kkg (lb/billion lbs) of aluminum cast by continuous methods		
118	Cadmium	0.59	0.28
119	Chromium	0.77	0.31
120	Copper	3.50	1.84
121	Cyanide	0.53	0.22
122	Lead	0.28	0.24
124	Nickel	2.60	1.84
125	Selenium	2.21	1.11
128	Zinc	2.45	1.03
	Aluminum	8.39	3.43
	Oil & Grease	36.86	22.12
	Total Suspended Solids	75.56	36.86
	pH	Within the range of 7.5 to 10.0 at all times.	

Solution Heat Treatment - Contact Cooling Water

	Pollutant or Pollutant Property	Maximum for Any One Day	Maximum for Monthly Average
	mg/kkg (lb/billion lbs) of aluminum quenched		
118	Cadmium	651.84	305.55
119	Chromium	855.54	346.29
120	Copper	3,870.30	2,037.00
121	Cyanide	590.73	244.44
122	Lead	305.55	264.81
124	Nickel	2,872.17	2,037.00
125	Selenium	2,444.40	1,222.20
128	Zinc	2,709.21	1,140.72
	Aluminum	9,268.35	3,788.82
	Oil & Grease	40,740.00	24,444.00
	Total Suspended Solids	83,517.00	40,740.00
	pH	Within the range of 7.5 to 10.0 at all times.	

Table X-33 (Continued)

BAT MASS LIMITATIONS FOR THE DRAWING WITH EMULSIONS OR SOAPS SUBCATEGORY

Cleaning or Etching - Bath

Pollutant or Pollutant Property		Maximum for Any One Day	Maximum for Monthly Average
	mg/kkg (lb/billion lbs) of aluminum cleaned or etched		
118	Cadmium	0.00	0.00
119	Chromium	0.00	0.00
120	Copper	0.00	0.00
121	Cyanide	0.00	0.00
122	Lead	0.00	0.00
124	Nickel	0.00	0.00
125	Selenium	0.00	0.00
128	Zinc	0.00	0.00
	Aluminum	0.00	0.00
	Oil & Grease	0.00	0.00
	Total Suspended Solids	0.00	0.00
	pH	Within the range of 7.5 to 10.0 at all times.	

Cleaning or Etching - Rinse

Pollutant or Pollutant Property		Maximum for Any One Day	Maximum for Monthly Average
	mg/kkg (lb/billion lbs) of aluminum cleaned or etched		
118	Cadmium	539.52	252.90
119	Chromium	708.12	286.62
120	Copper	3,203.40	1,686.00
121	Cyanide	488.94	202.32
122	Lead	252.90	219.18
124	Nickel	2,377.26	1,686.00
125	Selenium	2,023.20	1,011.60
128	Zinc	2,242.38	944.16
	Aluminum	7,671.30	3,135.96
	Oil & Grease	33,720.00	20,232.00
	Total Suspended Solids	69,126.00	33,720.00
	pH	Within the range of 7.5 to 10.0 at all times.	

Table X-33 (Continued)

BAT MASS LIMITATIONS FOR THE DRAWING WITH EMULSIONS OR SOAPS SUBCATEGORY

Cleaning or Etching - Scrubber Liquor

	Pollutant or Pollutant Property	Maximum for Any One Day	Maximum for Monthly Average
	mg/kkg (lb/billion lbs) of aluminum cleaned or etched		
118	Cadmium	618.56	289.95
119	Chromium	811.86	328.61
120	Copper	3,672.70	1,933.00
121	Cyanide	560.57	231.96
122	Lead	289.95	251.29
124	Nickel	2,725.53	1,933.00
125	Selenium	2,319.60	1,159.80
128	Zinc	2,570.89	1,082.48
	Aluminum	8,795.15	3,595.38
	Oil & Grease	38,660.00	23,196.00
	Total Suspended Solids	79,253.00	38,660.00
	pH	Within the range of 7.5 to 10.0 at all times.	

SECTION XI

NEW SOURCE PERFORMANCE STANDARDS

The basis for new source performance standards (NSPS) under Section 306 of the Clean Water Act is the best available demonstrated technology (BDT). New plants have the opportunity to design the best and most efficient production processes and wastewater treatment technologies. Therefore, BDT includes process changes, in-plant controls (including elimination of wastewater streams), operating procedure changes, and end-of-pipe treatment technologies to reduce pollution to the maximum extent possible. This section describes the control technology for treatment of wastewater from new sources and presents mass discharge limitations of regulated pollutants for NSPS, based on the described control technology.

TECHNICAL APPROACH TO NSPS

All wastewater reduction and process changes applicable to a new source have been considered previously for the BAT options. For this reason, five options were considered as the basis for NSPS, all identical to BAT options in Section X. Due to high costs and low environmental benefits, BAT Option 6 was not considered for NSPS. The five options are summarized below and presented in greater detail in Section X.

In summary form, the treatment technologies considered for new aluminum forming facilities are:

NSPS Option 1 is based on:

Oil skimming,

Lime and settle (chemical precipitation of metals), followed by sedimentation), and

pH adjustment; and, where required,

Cyanide removal,

Hexavalent chromium reduction, and

Chemical emulsion breaking.

NSPS Option 2 is based on:

NSPS Option 1, plus process wastewater flow minimization by the following methods:

- Heat treatment contact cooling water recycle through cooling towers.
- Continuous rod casting contact cooling water recycle.
- Air pollution control scrubber liquor recycle.
- Hauling or regeneration of spent cleaning or etching baths.
- Countercurrent cascade rinsing or other water efficient methods applied to cleaning or etching and extrusion die cleaning rinses.
- Alternative fluxing or in-line refining methods, neither of which require wet air pollution control, for degassing aluminum melts.

NSPS Option 3 is based on:

NSPS Option 2, plus multimedia filtration at the end of the NSPS Option 2 treatment train.

NSPS Option 4 is based on:

NSPS Option 2 plus thermal emulsion breaking or contractor hauling for concentrated emulsions.

NSPS Option 5 is based on:

NSPS Option 4, plus multimedia filtration at the end of the NSPS Option 4 treatment train.

A more detailed discussion of these options and their applicability with each of the six subcategories is presented in Section X.

NSPS OPTION SELECTION

A draft development document was circulated for limited review by industry and environmental groups. As a result of comments received, EPA carefully considered various options to determine their technological and economic feasibility in light of their beneficial characteristics.

EPA is proposing that the best available demonstrated technology for all six subcategories in the aluminum forming category be equivalent to BAT technology with the addition of filtration prior to discharge (NSPS Option 3). As discussed in Sections IX and X, these technologies are currently used at plants within this point source category. The Agency recognizes that new sources have the opportunity to implement more advanced levels of treatment without incurring the costs of retrofit equipment, the costs of partial or complete shutdown to install new equipment and to start up and stabilize the treatment system as existing

systems would have to do. Specifically, the design of new plants can be based on recycle of contact cooling water through cooling towers, recycle of air pollution control scrubber liquor or the use of dry air pollution control equipment, regeneration of cleaning or etching baths, and use of countercurrent cascade rinsing. New plants also have the opportunity to consider alternate fluxing or in-line refining methods during the preliminary design of the facility.

The data relied upon for selection of NSPS were primarily the data developed for existing sources which included costs on a plant-by-plant basis along with retrofit costs where applicable. The Agency believes that compliance costs could be lower for new sources than the cost estimates for equivalent existing sources, because production processes can be designed on the basis of lower flows and there will be no costs associated with retrofitting the in-process controls. Therefore, new sources regardless of whether they are plants with major modifications or greenfield sites, will have costs that are not greater than the costs that existing sources would incur in achieving equivalent pollutant discharge reduction. Based on this the Agency believes that the selected NSPS (NSPS Option 3) is appropriate for both greenfield sites and existing sites undergoing major modifications (e.g., a primary aluminum plant which installs a rolling operation).

Costs and Environmental Benefits of Treatment Options

Costs for an individual new source can be estimated using the methods described in Section VIII. The Agency has not estimated total costs for the category or subcategories since it is not known how many new aluminum forming plants will be built. Estimates of treatment performance for an individual "normal plant" in each subcategory are presented in Tables X-14 through X-19 (pp. 936 through 947).

REGULATED POLLUTANT PARAMETERS

The Agency has no reason to believe that the pollutants that will be found in significant quantities in processes within new sources will be any different than with existing sources. Consequently, pollutants selected for regulation, in accordance with the rationale of Section VI, are the same ones for each subcategory that were selected for BAT plus TSS, oil and grease, and pH.

NEW SOURCE PERFORMANCE STANDARDS

The regulatory production normalized flows for NSPS (NSPS Option 3) are the same as the production normalized flows for the selected BAT option (Option 2). Production normalized flows for

NSPS Options 4 and 5 are based on the flow reduction controls of NSPS Option 2 plus zero discharge of all emulsified wastewater streams based on the application of thermal emulsion breaking.

NSPS Options 1, 2, and 4 are based on the treatment effectiveness values for lime and settle technology, as presented in Table VII-21 (p. 748). NSPS Options 3 and 5 are based on the treatment effectiveness values for lime, settle, and filter technology, as presented in Table VII-21 (p. 748). The mass of pollutant allowed to be discharged per mass of product is calculated by multiplying the appropriate treatment effectiveness value (one day maximum and ten day average values) (mg/l) by the production normalized flows (l/kkg). When these calculations are performed, the mass-based NSPS can be derived for the selected option (NSPS Option 3). These values are presented for each of the six subcategories in Tables XI-1 through XI-6.

Table XI-1

NSPS FOR THE ROLLING WITH NEAT OILS SUBCATEGORY

Rolling With Neat Oils - Core Waste Streams Without An Annealing Furnace Scrubber

	Pollutant or Pollutant Property	Maximum for Any One Day	Maximum for Monthly Average
	mg/kkg (lb/billion lbs) of aluminum rolled with neat oils		
118	Cadmium	3.32	1.33
119	Chromium	6.13	2.49
120	Copper	21.22	10.11
121	Cyanide	3.32	1.33
122	Lead	1.66	1.49
124	Nickel	9.12	6.14
125	Selenium	0.50	0.17
128	Zinc	16.91	6.96
	Aluminum	50.24	20.56
	Oil & Grease	165.80	165.80
	Total Suspended Solids	248.70	182.38
	pH	Within the range of 7.5 to 10.0 at all times.	

Rolling With Neat Oils - Core Waste Streams With An Annealing Furnace Scrubber

	Pollutant or Pollutant Property	Maximum for Any One Day	Maximum for Monthly Average
	mg/kkg (lb/billion lbs) of aluminum rolled with neat oils		
118	Cadmium	8.59	3.43
119	Chromium	15.88	6.44
120	Copper	54.95	26.19
121	Cyanide	8.59	3.43
122	Lead	4.29	3.86
124	Nickel	23.61	15.88
125	Selenium	1.29	0.43
128	Zinc	43.79	18.03
	Aluminum	130.08	53.23
	Oil & Grease	429.30	429.30
	Total Suspended Solids	643.95	472.23
	pH	Within the range of 7.5 to 10.0 at all times.	

Table XI-1 (Continued)

NSPS FOR THE ROLLING WITH NEAT OILS SUBCATEGORY

Continuous Sheet Casting - Spent Lubricant

Pollutant or Pollutant Property		Maximum for Any One Day	Maximum for Monthly Average
mg/kkg (lb/billion lbs) of aluminum cast by continuous methods			
118	Cadmium	0.37	0.15
119	Chromium	0.68	0.28
120	Copper	2.36	1.12
121	Cyanide	0.37	0.15
122	Lead	0.18	0.17
124	Nickel	1.01	0.68
125	Selenium	0.06	0.02
128	Zinc	1.88	0.77
	Aluminum	5.58	2.29
	Oil & Grease	18.43	18.43
	Total Suspended Solids	27.65	20.27
	pH	Within the range of 7.5 to 10.0 at all times.	

Solution Heat Treatment - Contact Cooling Water

Pollutant or Pollutant Property		Maximum for Any One Day	Maximum for Monthly Average
mg/kkg (lb/billion lbs) of aluminum quenched			
118	Cadmium	407.40	162.96
119	Chromium	753.69	305.55
120	Copper	2,607.36	1,242.57
121	Cyanide	407.40	162.96
122	Lead	203.70	183.33
124	Nickel	1,120.35	753.69
125	Selenium	61.11	20.37
128	Zinc	2,077.74	855.54
	Aluminum	6,172.11	2,525.88
	Oil & Grease	20,370.00	20,370.00
	Total Suspended Solids	30,555.00	22,407.00
	pH	Within the range of 7.5 to 10.0 at all times.	

Table XI-1 (Continued)

NSPS FOR THE ROLLING WITH NEAT OILS SUBCATEGORY

Cleaning or Etching - Bath

	Pollutant or Pollutant Property	Maximum for Any One Day	Maximum for Monthly Average
	mg/kkg (lb/billion lbs) of aluminum cleaned or etched		
118	Cadmium	0.00	0.00
119	Chromium	0.00	0.00
120	Copper	0.00	0.00
121	Cyanide	0.00	0.00
122	Lead	0.00	0.00
124	Nickel	0.00	0.00
125	Selenium	0.00	0.00
128	Zinc	0.00	0.00
	Aluminum	0.00	0.00
	Oil & Grease	0.00	0.00
	Total Suspended Solids	0.00	0.00
	pH	Within the range of 7.5 to 10.0 at all times.	

Cleaning or Etching - Rinse

	Pollutant or Pollutant Property	Maximum for Any One Day	Maximum for Monthly Average
	mg/kkg (lb/billion lbs) of aluminum cleaned or etched		
118	Cadmium	337.20	134.88
119	Chromium	623.82	252.90
120	Copper	2,158.08	1,028.46
121	Cyanide	337.20	134.88
122	Lead	168.60	151.74
124	Nickel	927.30	623.82
125	Selenium	50.58	16.86
128	Zinc	1,719.72	708.12
	Aluminum	5,108.58	2,090.64
	Oil & Grease	16,860.00	16,860.00
	Total Suspended Solids	25,290.00	18,546.00
	pH	Within the range of 7.5 to 10.0 at all times.	

Table XI-1 (Continued)

NSPS FOR THE ROLLING WITH NEAT OILS SUBCATEGORY

Cleaning or Etching - Scrubber Liquor

	Pollutant or Pollutant Property	Maximum for Any One Day	Maximum for Monthly Average
	mg/kkg (lb/billion lbs) of aluminum cleaned or etched		
118	Cadmium	386.60	154.64
119	Chromium	715.21	289.95
120	Copper	2,474.24	1,179.13
121	Cyanide	386.60	154.64
122	Lead	193.30	173.97
124	Nickel	1,063.15	715.21
125	Selenium	57.99	19.33
128	Zinc	1,971.66	811.86
	Aluminum	5,856.99	2,396.92
	Oil & Grease	19,330.00	19,330.00
	Total Suspended Solids	28,995.00	21,263.00
	pH	Within the range of 7.5 to 10.0 at all times.	

Table XI-2

NSPS FOR THE ROLLING WITH EMULSIONS SUBCATEGORY

Rolling With Emulsions - Core Waste Streams

	Pollutant or Pollutant Property	Maximum for Any One Day	Maximum for Monthly Average
	mg/kkg (lb/billion lbs) of aluminum rolled with emulsions		
118	Cadmium	18.22	7.29
119	Chromium	33.70	13.66
120	Copper	116.60	55.56
121	Cyanide	18.22	7.29
122	Lead	9.11	8.20
124	Nickel	50.10	33.70
125	Selenium	2.73	0.91
128	Zinc	92.91	38.26
	Aluminum	276.00	112.95
	Oil & Grease	910.90	910.90
	Total Suspended Solids	1,366.35	1,001.99
	pH	Within the range of 7.5 to 10.0 at all times.	

Direct Chill Casting - Contact Cooling Water

	Pollutant or Pollutant Property	Maximum for Any One Day	Maximum for Monthly Average
	mg/kkg (lb/billion lbs) of aluminum cast by direct chill methods		
118	Cadmium	399.80	159.92
119	Chromium	739.63	299.85
120	Copper	2,558.72	1,219.39
121	Cyanide	399.80	159.92
122	Lead	199.90	179.91
124	Nickel	1,099.45	739.63
125	Selenium	59.97	19.99
128	Zinc	2,038.98	839.58
	Aluminum	6,056.97	2,478.76
	Oil & Grease	19,990.00	19,990.00
	Total Suspended Solids	29,985.00	21,989.00
	pH	Within the range of 7.5 to 10.0 at all times.	

Table XI-2 (Continued)

NSPS FOR THE ROLLING WITH EMULSIONS SUBCATEGORY

Solution Heat Treatment - Contact Cooling Water

	Pollutant or Pollutant Property	Maximum for Any One Day	Maximum for Monthly Average
		mg/kkg (lb/billion lbs) of aluminum quenched	
118	Cadmium	407.40	162.96
119	Chromium	753.69	305.55
120	Copper	2,607.36	1,242.57
121	Cyanide	407.40	162.96
122	Lead	203.70	183.33
124	Nickel	1,120.35	753.69
125	Selenium	61.11	20.37
128	Zinc	2,077.74	855.54
	Aluminum	6,172.11	2,525.88
	Oil & Grease	20,370.00	20,370.00
	Total Suspended Solids	30,555.00	22,407.00
	pH	Within the range of 7.5 to 10.0 at all times.	

Cleaning or Etching - Bath

	Pollutant or Pollutant Property	Maximum for Any One Day	Maximum for Monthly Average
		mg/kkg (lb/billion lbs) of aluminum cleaned or etched	
118	Cadmium	0.00	0.00
119	Chromium	0.00	0.00
120	Copper	0.00	0.00
121	Cyanide	0.00	0.00
122	Lead	0.00	0.00
124	Nickel	0.00	0.00
125	Selenium	0.00	0.00
128	Zinc	0.00	0.00
	Aluminum	0.00	0.00
	Oil & Grease	0.00	0.00
	Total Suspended Solids	0.00	0.00
	pH	Within the range of 7.5 to 10.0 at all times.	

Table XI-2 (Continued)

NSPS FOR THE ROLLING WITH EMULSIONS SUBCATEGORY

Cleaning or Etching - Rinse

	Pollutant or Pollutant Property	Maximum for Any One Day	Maximum for Monthly Average
	mg/kkg (lb/billion lbs) of aluminum cleaned or etched		
118	Cadmium	337.20	134.88
119	Chromium	623.82	252.90
120	Copper	2,158.08	1,028.46
121	Cyanide	337.20	134.88
122	Lead	168.60	151.74
124	Nickel	927.30	623.82
125	Selenium	50.58	16.86
128	Zinc	1,719.72	708.12
	Aluminum	5,108.58	2,090.64
	Oil & Grease	16,860.00	16,860.00
	Total Suspended Solids	25,290.00	18,546.00
	pH	Within the range of 7.5 to 10.0 at all times.	

Cleaning or Etching - Scrubber Liquor

	Pollutant or Pollutant Property	Maximum for Any One Day	Maximum for Monthly Average
	mg/kkg (lb/billion lbs) of aluminum cleaned or etched		
118	Cadmium	386.60	154.64
119	Chromium	715.21	289.95
120	Copper	2,474.24	1,179.13
121	Cyanide	386.60	154.64
122	Lead	193.30	173.97
124	Nickel	1,063.15	715.21
125	Selenium	57.99	19.33
128	Zinc	1,971.66	811.86
	Aluminum	5,856.99	2,396.92
	Oil & Grease	19,330.00	19,330.00
	Total Suspended Solids	28,995.00	21,263.00
	pH	Within the range of 7.5 to 10.0 at all times.	

Table XI-3

NSPS FOR THE EXTRUSION SUBCATEGORY

Extrusion - Core Waste Streams

Pollutant or Pollutant Property		Maximum for Any One Day	Maximum for Monthly Average
		mg/kkg (lb/billion lbs) of aluminum extruded	
118	Cadmium	59.62	23.85
119	Chromium	110.30	44.72
120	Copper	381.57	181.84
121	Cyanide	59.62	23.85
122	Lead	29.81	26.83
124	Nickel	163.96	110.30
125	Selenium	8.94	2.98
128	Zinc	304.06	125.20
	Aluminum	903.24	369.64
	Oil & Grease	2,981.00	2,981.00
	Total Suspended Solids	4,471.50	3,279.10
	pH	Within the range of 7.5 to 10.0 at all times.	

Direct Chill Casting - Contact Cooling Water

Pollutant or Pollutant Property		Maximum for Any One Day	Maximum for Monthly Average
		mg/kkg (lb/billion lbs) of aluminum cast by direct chill methods	
118	Cadmium	399.80	159.92
119	Chromium	739.63	299.85
120	Copper	2,558.72	1,219.39
121	Cyanide	399.80	159.92
122	Lead	199.90	179.91
124	Nickel	1,099.45	739.63
125	Selenium	59.97	19.99
128	Zinc	2,038.98	839.58
	Aluminum	6,056.97	2,478.76
	Oil & Grease	19,990.00	19,990.00
	Total Suspended Solids	29,985.00	21,989.00
	pH	Within the range of 7.5 to 10.0 at all times.	

Table XI-3 (Continued)

NSPS FOR THE EXTRUSION SUBCATEGORY

Solution and Press Heat Treatment - Contact Cooling Water

	Pollutant or Pollutant Property	Maximum for Any One Day	Maximum for Monthly Average
		mg/kkg (lb/billion lbs) of aluminum quenched	
118	Cadmium	407.40	162.96
119	Chromium	753.69	305.55
120	Copper	2,607.36	1,242.57
121	Cyanide	407.40	162.96
122	Lead	203.70	183.33
124	Nickel	1,120.35	753.69
125	Selenium	61.11	20.37
128	Zinc	2,077.74	855.54
	Aluminum	6,172.11	2,525.88
	Oil & Grease	20,370.00	20,370.00
	Total Suspended Solids	30,555.00	22,407.00
	pH	Within the range of 7.5 to 10.0 at all times.	

Cleaning or Etching - Bath

	Pollutant or Pollutant Property	Maximum for Any One Day	Maximum for Monthly Average
		mg/kkg (lb/billion lbs) of aluminum cleaned or etched	
118	Cadmium	0.00	0.00
119	Chromium	0.00	0.00
120	Copper	0.00	0.00
121	Cyanide	0.00	0.00
122	Lead	0.00	0.00
124	Nickel	0.00	0.00
125	Selenium	0.00	0.00
128	Zinc	0.00	0.00
	Aluminum	0.00	0.00
	Oil & Grease	0.00	0.00
	Total Suspended Solids	0.00	0.00
	pH	Within the range of 7.5 to 10.0 at all times.	

Table XI-3 (Continued)

NSPS FOR THE EXTRUSION SUBCATEGORY

Cleaning or Etching - Rinse

	Pollutant or Pollutant Property	Maximum for Any One Day	Maximum for Monthly Average
	mg/kkg (lb/billion lbs) of aluminum cleaned or etched		
118	Cadmium	337.20	134.88
119	Chromium	623.82	252.90
120	Copper	2,158.08	1,028.46
121	Cyanide	337.20	134.88
122	Lead	168.60	151.74
124	Nickel	927.30	623.82
125	Selenium	50.58	16.86
128	Zinc	1,719.72	708.12
	Aluminum	5,108.58	2,090.64
	Oil & Grease	16,860.00	16,860.00
	Total Suspended Solids	25,290.00	18,546.00
	pH	Within the range of 7.5 to 10.0 at all times.	

Cleaning or Etching - Scrubber Liquor

	Pollutant or Pollutant Property	Maximum for Any One Day	Maximum for Monthly Average
	mg/kkg (lb/billion lbs) of aluminum cleaned or etched		
118	Cadmium	386.60	154.64
119	Chromium	715.21	289.95
120	Copper	2,474.24	1,179.13
121	Cyanide	386.60	154.64
122	Lead	193.30	173.97
124	Nickel	1,063.15	715.21
125	Selenium	57.99	19.33
128	Zinc	1,971.66	811.86
	Aluminum	5,856.99	2,396.92
	Oil & Grease	19,330.00	19,330.00
	Total Suspended Solids	28,995.00	21,263.00
	pH	Within the range of 7.5 to 10.0 at all times.	

Table XI-3 (Continued)

NSPS FOR THE EXTRUSION SUBCATEGORY

Degassing - Scrubber Liquor

	Pollutant or Pollutant Property	Maximum for Any One Day	Maximum for Monthly Average
		mg/kkg (lb/billion lbs) of aluminum degassed	
118	Cadmium	0.00	0.00
119	Chromium	0.00	0.00
120	Copper	0.00	0.00
121	Cyanide	0.00	0.00
122	Lead	0.00	0.00
124	Nickel	0.00	0.00
125	Selenium	0.00	0.00
128	Zinc	0.00	0.00
	Aluminum	0.00	0.00
	Oil & Grease	0.00	0.00
	Total Suspended Solids	0.00	0.00
	pH	Within the range of 7.5 to 10.0 at all times.	

Table XI-4

NSPS FOR THE FORGING SUBCATEGORY

Forging - Core Waste Streams

Pollutant or Pollutant Property		Maximum for Any One Day	Maximum for Monthly Average
		mg/kkg (lb/billion lbs) of aluminum forged	
118	Cadmium	1.56	0.62
119	Chromium	2.89	1.17
120	Copper	9.99	4.76
121	Cyanide	1.56	0.62
122	Lead	0.78	0.70
124	Nickel	4.29	2.89
125	Selenium	0.23	0.08
128	Zinc	7.96	3.28
	Aluminum	23.66	9.68
	Oil & Grease	78.07	78.07
	Total Suspended Solids	117.11	85.88
	pH	Within the range of 7.5 to 10.0 at all times.	

Forging - Scrubber Liquor

Pollutant or Pollutant Property		Maximum for Any One Day	Maximum for Monthly Average
		mg/kkg (lb/billion lbs) of aluminum forged	
118	Cadmium	18.86	7.54
119	Chromium	34.89	14.15
120	Copper	120.72	57.53
121	Cyanide	18.86	7.54
122	Lead	9.43	8.49
124	Nickel	51.87	34.89
125	Selenium	2.83	0.94
128	Zinc	96.20	39.61
	Aluminum	285.76	116.94
	Oil & Grease	943.10	943.10
	Total Suspended Solids	1,414.65	1,037.41
	pH	Within the range of 7.5 to 10.0 at all times.	

Table XI-4 (Continued)

NSPS FOR THE FORGING SUBCATEGORY

Solution Heat Treatment - Contact Cooling Water

	Pollutant or Pollutant Property	Maximum for Any One Day	Maximum for Monthly Average
		mg/kkg (lb/billion lbs) of aluminum quenched	
118	Cadmium	407.40	162.96
119	Chromium	753.69	305.55
120	Copper	2,607.36	1,242.57
121	Cyanide	407.40	162.96
122	Lead	203.70	183.33
124	Nickel	1,120.35	753.69
125	Selenium	61.11	20.37
128	Zinc	2,077.74	855.54
	Aluminum	6,172.11	2,525.88
	Oil & Grease	20,370.00	20,370.00
	Total Suspended Solids	30,555.00	22,407.00
	pH	Within the range of 7.5 to 10.0 at all times.	

Cleaning or Etching - Bath

	Pollutant or Pollutant Property	Maximum for Any One Day	Maximum for Monthly Average
		mg/kkg (lb/billion lbs) of aluminum cleaned or etched	
118	Cadmium	0.00	0.00
119	Chromium	0.00	0.00
120	Copper	0.00	0.00
121	Cyanide	0.00	0.00
122	Lead	0.00	0.00
124	Nickel	0.00	0.00
125	Selenium	0.00	0.00
128	Zinc	0.00	0.00
	Aluminum	0.00	0.00
	Oil & Grease	0.00	0.00
	Total Suspended Solids	0.00	0.00
	pH	Within the range of 7.5 to 10.0 at all times.	

Table XI-4 (Continued)

NSPS FOR THE FORGING SUBCATEGORY

Cleaning or Etching - Rinse

	Pollutant or Pollutant Property	Maximum for Any One Day	Maximum for Monthly Average
	mg/kkg (lb/billion lbs) of aluminum cleaned or etched		
118	Cadmium	337.20	134.88
119	Chromium	623.82	252.90
120	Copper	2,158.08	1,028.46
121	Cyanide	337.20	134.88
122	Lead	168.60	151.74
124	Nickel	927.30	623.82
125	Selenium	50.58	16.86
128	Zinc	1,719.72	708.12
	Aluminum	5,108.58	2,090.64
	Oil & Grease	16,860.00	16,860.00
	Total Suspended Solids	25,290.00	18,546.00
	pH	Within the range of 7.5 to 10.0 at all times.	

Cleaning or Etching - Scrubber Liquor

	Pollutant or Pollutant Property	Maximum for Any One Day	Maximum for Monthly Average
	mg/kkg (lb/billion lbs) of aluminum cleaned or etched		
118	Cadmium	386.60	154.64
119	Chromium	715.21	289.95
120	Copper	2,474.24	1,179.13
121	Cyanide	386.60	154.64
122	Lead	193.30	173.97
124	Nickel	1,063.15	715.21
125	Selenium	57.99	19.33
128	Zinc	1,971.66	811.86
	Aluminum	5,856.99	2,396.92
	Oil & Grease	19,330.00	19,330.00
	Total Suspended Solids	28,995.00	21,263.00
	pH	Within the range of 7.5 to 10.0 at all times.	

Table XI-5

NSPS FOR THE DRAWING WITH NEAT OILS SUBCATEGORY

Drawing With Neat Oils - Core Waste Streams

	Pollutant or Pollutant Property	Maximum for Any One Day	Maximum for Monthly Average
	mg/kkg (lb/billion lbs) of aluminum drawn with neat oils		
118	Cadmium	1.56	0.62
119	Chromium	2.89	1.17
120	Copper	9.99	4.76
121	Cyanide	1.56	0.62
122	Lead	0.78	0.70
124	Nickel	4.29	2.89
125	Selenium	0.23	0.08
128	Zinc	7.96	3.28
	Aluminum	23.66	9.68
	Oil & Grease	78.07	78.07
	Total Suspended Solids	117.11	85.88
	pH	Within the range of 7.5 to 10.0 at all times.	

Continuous Rod Casting - Contact Cooling Water

	Pollutant or Pollutant Property	Maximum for Any One Day	Maximum for Monthly Average
	mg/kkg (lb/billion lbs) of aluminum cast by continuous methods		
118	Cadmium	20.84	8.34
119	Chromium	38.56	15.63
120	Copper	133.38	63.56
121	Cyanide	20.84	8.34
122	Lead	10.42	9.38
124	Nickel	57.31	38.55
125	Selenium	3.13	1.04
128	Zinc	106.28	43.76
	Aluminum	315.73	129.21
	Oil & Grease	1,042.00	1,042.00
	Total Suspended Solids	1,563.00	1,146.20
	pH	Within the range of 7.5 to 10.0 at all times.	

Table XI-5 (Continued)

NSPS FOR THE DRAWING WITH NEAT OILS SUBCATEGORY

Continuous Rod Casting - Spent Lubricant

	Pollutant or Pollutant Property	Maximum for Any One Day	Maximum for Monthly Average
	mg/kkg (lb/billion lbs) of aluminum cast by continuous methods		
118	Cadmium	0.37	0.15
119	Chromium	0.68	0.28
120	Copper	2.36	1.12
121	Cyanide	0.37	0.15
122	Lead	0.18	0.17
124	Nickel	1.01	0.68
125	Selenium	0.06	0.02
128	Zinc	1.88	0.77
	Aluminum	5.58	2.29
	Oil & Grease	18.43	18.43
	Total Suspended Solids	27.65	20.27
	pH	Within the range of 7.5 to 10.0 at all times.	

Solution Heat Treatment - Contact Cooling Water

	Pollutant or Pollutant Property	Maximum for Any One Day	Maximum for Monthly Average
	mg/kkg (lb/billion lbs) of aluminum quenched		
118	Cadmium	407.40	162.96
119	Chromium	753.69	305.55
120	Copper	2,607.36	1,242.57
121	Cyanide	407.40	162.96
122	Lead	203.70	183.33
124	Nickel	1,120.35	753.69
125	Selenium	61.11	20.37
128	Zinc	2,077.74	855.54
	Aluminum	6,172.11	2,525.88
	Oil & Grease	20,370.00	20,370.00
	Total Suspended Solids	30,555.00	22,407.00
	pH	Within the range of 7.5 to 10.0 at all times.	

Table XI-5 (Continued)

NSPS FOR THE DRAWING WITH NEAT OILS SUBCATEGORY

Cleaning or Etching - Bath

	Pollutant or Pollutant Property	Maximum for Any One Day	Maximum for Monthly Average
	mg/kkg (lb/billion lbs) of aluminum cleaned or etched		
118	Cadmium	0.00	0.00
119	Chromium	0.00	0.00
120	Copper	0.00	0.00
121	Cyanide	0.00	0.00
122	Lead	0.00	0.00
124	Nickel	0.00	0.00
125	Selenium	0.00	0.00
128	Zinc	0.00	0.00
	Aluminum	0.00	0.00
	Oil & Grease	0.00	0.00
	Total Suspended Solids	0.00	0.00
	pH	Within the range of 7.5 to 10.0 at all times.	

Cleaning or Etching - Rinse

	Pollutant or Pollutant Property	Maximum for Any One Day	Maximum for Monthly Average
	mg/kkg (lb/billion lbs) of aluminum cleaned or etched		
118	Cadmium	337.20	134.88
119	Chromium	623.82	252.90
120	Copper	2,158.08	1,028.46
121	Cyanide	337.20	134.88
122	Lead	168.60	151.74
124	Nickel	927.30	623.82
125	Selenium	50.58	16.86
128	Zinc	1,719.72	708.12
	Aluminum	5,108.58	2,090.64
	Oil & Grease	16,860.00	16,860.00
	Total Suspended Solids	25,290.00	18,546.00
	pH	Within the range of 7.5 to 10.0 at all times.	

Table XI-5 (Continued)

NSPS FOR THE DRAWING WITH NEAT OILS SUBCATEGORY

Cleaning or Etching - Scrubber Liquor

	Pollutant or Pollutant Property	Maximum for Any One Day	Maximum for Monthly Average
	mg/kkg (lb/billion lbs) of aluminum cleaned or etched		
118	Cadmium	386.60	154.64
119	Chromium	715.21	289.95
120	Copper	2,474.24	1,179.13
121	Cyanide	386.60	154.64
122	Lead	193.30	173.97
124	Nickel	1,063.15	715.21
125	Selenium	57.99	19.33
128	Zinc	1,971.66	811.86
	Aluminum	5,856.99	2,396.92
	Oil & Grease	19,330.00	19,330.00
	Total Suspended Solids	28,995.00	21,263.00
	pH	Within the range of 7.5 to 10.0 at all times.	

Table XI-6

NSPS FOR THE DRAWING WITH EMULSIONS
OR SOAPS SUBCATEGORY

Drawing With Emulsions or Soaps - Core Waste Streams

Pollutant or Pollutant Property		Maximum for Any One Day	Maximum for Monthly Average
mg/kkg (lb/billion lbs) of aluminum drawn with emulsions or soaps			
118	Cadmium	84.86	33.94
119	Chromium	156.99	63.65
120	Copper	543.10	258.82
121	Cyanide	84.86	33.94
122	Lead	42.43	38.19
124	Nickel	233.37	156.99
125	Selenium	12.73	4.24
128	Zinc	432.79	178.21
	Aluminum	1,285.63	526.13
	Oil & Grease	4,243.00	4,243.00
	Total Suspended Solids	6,364.50	4,667.30
	pH	Within the range of 7.5 to 10.0 at all times.	

Continuous Rod Casting - Contact Cooling Water

Pollutant or Pollutant Property		Maximum for Any One Day	Maximum for Monthly Average
mg/kkg (lb/billion lbs) of aluminum cast by continuous methods			
118	Cadmium	20.84	8.34
119	Chromium	38.56	15.63
120	Copper	133.38	63.56
121	Cyanide	20.84	8.34
122	Lead	10.42	9.38
124	Nickel	57.31	38.55
125	Selenium	3.13	1.04
128	Zinc	106.28	43.76
	Aluminum	315.73	129.21
	Oil & Grease	1,042.00	1,042.00
	Total Suspended Solids	1,563.00	1,146.20
	pH	Within the range of 7.5 to 10.0 at all times.	

Table XI-6 (Continued)

NSPS FOR THE DRAWING WITH EMULSIONS
OR SOAPS SUBCATEGORY

Continuous Rod Casting - Spent Lubricant

	Pollutant or Pollutant Property	Maximum for Any One Day	Maximum for Monthly Average
	mg/kkg (lb/billion lbs) of aluminum cast by continuous methods		
118	Cadmium	0.37	0.15
119	Chromium	0.68	0.28
120	Copper	2.36	1.12
121	Cyanide	0.37	0.15
122	Lead	0.18	0.17
124	Nickel	1.01	0.68
125	Selenium	0.06	0.02
128	Zinc	1.88	0.77
	Aluminum	5.58	2.29
	Oil & Grease	18.43	18.43
	Total Suspended Solids	27.65	20.27
	pH	Within the range of 7.5 to 10.0 at all times.	

Solution Heat Treatment - Contact Cooling Water

	Pollutant or Pollutant Property	Maximum for Any One Day	Maximum for Monthly Average
	mg/kkg (lb/billion lbs) of aluminum quenched		
118	Cadmium	407.40	162.96
119	Chromium	753.69	305.55
120	Copper	2,607.36	1,242.57
121	Cyanide	407.40	162.96
122	Lead	203.70	183.33
124	Nickel	1,120.35	753.69
125	Selenium	61.11	20.37
128	Zinc	2,077.74	855.54
	Aluminum	6,172.11	2,525.88
	Oil & Grease	20,370.00	20,370.00
	Total Suspended Solids	30,555.00	22,407.00
	pH	Within the range of 7.5 to 10.0 at all times.	

Table XI-6 (Continued)

NSPS FOR THE DRAWING WITH EMULSIONS
OR SOAPS SUBCATEGORY

Cleaning or Etching - Bath

	Pollutant or Pollutant Property	Maximum for Any One Day	Maximum for Monthly Average
	mg/kkg (lb/billion lbs) of aluminum cleaned or etched		
118	Cadmium	0.00	0.00
119	Chromium	0.00	0.00
120	Copper	0.00	0.00
121	Cyanide	0.00	0.00
122	Lead	0.00	0.00
124	Nickel	0.00	0.00
125	Selenium	0.00	0.00
128	Zinc	0.00	0.00
	Aluminum	0.00	0.00
	Oil & Grease	0.00	0.00
	Total Suspended Solids	0.00	0.00
	pH	Within the range of 7.5 to 10.0 at all times.	

Cleaning or Etching - Rinse

	Pollutant or Pollutant Property	Maximum for Any One Day	Maximum for Monthly Average
	mg/kkg (lb/billion lbs) of aluminum cleaned or etched		
118	Cadmium	337.20	134.88
119	Chromium	623.82	252.90
120	Copper	2,158.08	1,028.46
121	Cyanide	337.20	134.88
122	Lead	168.60	151.74
124	Nickel	927.30	623.82
125	Selenium	50.58	16.86
128	Zinc	1,719.72	708.12
	Aluminum	5,108.58	2,090.64
	Oil & Grease	16,860.00	16,860.00
	Total Suspended Solids	25,290.00	18,546.00
	pH	Within the range of 7.5 to 10.0 at all times.	

Table XI-6 (Continued)

NSPS FOR THE DRAWING WITH EMULSIONS
OR SOAPS SUBCATEGORY

Cleaning or Etching - Scrubber Liquor

	Pollutant or Pollutant Property	Maximum for Any One Day	Maximum for Monthly Average
	mg/kkg (lb/billion lbs) of aluminum cleaned or etched		
118	Cadmium	386.60	154.64
119	Chromium	715.21	289.95
120	Copper	2,474.24	1,179.13
121	Cyanide	386.60	154.64
122	Lead	193.30	173.97
124	Nickel	1,063.15	715.21
125	Selenium	57.99	19.33
128	Zinc	1,971.66	811.86
	Aluminum	5,856.99	2,396.92
	Oil & Grease	19,330.00	19,330.00
	Total Suspended Solids	28,995.00	21,263.00
	pH	Within the range of 7.5 to 10.0 at all times.	

SECTION XII

PRETREATMENT STANDARDS

Section 307(b) of the Clean Water Act requires EPA to promulgate pretreatment standards for existing sources (PSES), which must be achieved within three years of promulgation. PSES are designed to prevent the discharge of pollutants which pass through, interfere with, or are otherwise incompatible with the operation of publicly owned treatment works (POTW). The Clean Water Act of 1977 adds a new dimension by requiring pretreatment for pollutants, such as heavy metals, that limit POTW sludge management alternatives, including the beneficial use of sludges on agricultural lands. The legislative history of the 1977 Act indicates that pretreatment standards are to be technology based, analogous to the best available technology for removal of toxic pollutants.

Section 307(c) of the Act requires EPA to promulgate pretreatment standards for new sources (PSNS) at the same time that it promulgates NSPS. New indirect discharge facilities, like new direct discharge facilities, have the opportunity to incorporate the best available demonstrated technologies, including process changes, in-plant controls, and end-of-pipe treatment technologies, and to use plant site selection to ensure adequate treatment system installation.

General Pretreatment Regulations for Existing and New Sources of Pollution were published in the Federal Register, Vol. 43, No. 123, Monday, June 26, 1978. These regulations describe the Agency's overall policy for establishing and enforcing pretreatment standards for new and existing users of a POTW and delineate the responsibilities and deadlines applicable to each party in this effort. In addition, 40 CFR Part 403, Section 403.5(b), outlines prohibited discharges which apply to all users of a POTW.

This section describes the treatment and control technology for pretreatment of process wastewaters from existing sources and new sources, and presents mass discharge limitations of regulated pollutants for existing and new sources, based on the described control technology.

DISCHARGE OF ALUMINUM FORMING WASTEWATERS TO A POTW

There are 66 plants in the aluminum forming industry which discharge to a POTW. The plants that may be affected by pretreatment standards represent about 24 percent of the aluminum forming plants.

Pretreatment standards are established to ensure removal of pollutants which interfere with, pass through, or are otherwise incompatible with a POTW. A determination of which pollutants may pass through or be incompatible with POTW operations, and thus be subject to pretreatment standards, depends on the level of treatment employed by the POTW. In general, more pollutants will pass through or interfere with a POTW employing primary treatment (usually physical separation by settling) than one which has installed secondary treatment (settling plus biological treatment).

Many of the pollutants contained in aluminum forming wastewaters are not biodegradable and are, therefore, ineffectively treated by such systems. Furthermore, these pollutants have been known to pass through or interfere with the normal operations of these systems. Problems associated with the uncontrolled release of pollutant parameters identified in aluminum forming process wastewaters to POTW were discussed in Section VI. The discussion covered pass-through, interference, and sludge useability.

The Agency based the selection of pretreatment standards for the aluminum forming category on the minimization of pass-through of toxic pollutants at POTW. For each subcategory, the Agency compared removal rates for each toxic pollutant limited by the pretreatment options to the removal rate for that pollutant at well operated POTW. The POTW removal rates were determined through a study conducted by the Agency at over 40 POTW and a statistical analysis of the data. (See Fate of Priority Pollutants in Publicly Owned Treatment Works, EPA 440/1-80-301, October, 1980; and Determining National Removal Credits for Selected Pollutants for Publicly Owned Treatment Works, EPA 440/82-008, September, 1982.) The POTW removal rates are presented below:

Toxic Pollutant	POTW Removal Rate	PSES Option 2 Removal Rate
Chromium	65%	99.8%
Copper	58%	85.4%
Cyanide	52%	87.8%
Lead	48%	93.7%
Nickel	19%	66.9%
Zinc	65%	96.2%
TTO	61 - 96%	50 - 100%

The pretreatment options selected provide for significantly more removal of toxic pollutants than would occur if aluminum forming wastewaters were discharged untreated to POTW. Thus pretreatment standards will control the discharge of toxic pollutants to POTW and prevent pass through.

TECHNICAL APPROACH TO PRETREATMENT

The pretreatment options for existing sources and new sources are identical to the options considered for BAT. Pretreatment Options 4, 5, and 6 have high costs and high energy requirements and achieve only a small incremental removal of primarily toxic organics over removals achieved by pretreatment Options 2 and 3. The principle difference in pollutant removal achievable by Options 4, 5, and 6 over Options 2 and 3 are toxic organics. As shown in Section X (Table X-21, p. 951), oil removal to the BPT level can achieve a 97 percent reduction in toxic organic pollutants. Therefore, Options 4, 5, and 6 were not further considered for PSES. There is no reason to believe that the levels of toxic organics discharged from new sources will be any different than from existing sources. Thus, Options 4, 5, and 6 were not further considered for PSNS.

Treatment technologies and controls employed for the pretreatment options are:

Pretreatment Option 1 is based on:

Oil skimming;

Lime and settle, and where required;

Chromium reduction.

Cyanide removal, and

Chemical emulsion breaking.

Pretreatment Option 2 is based on:

All of Pretreatment Option 1, plus

Hauling or regeneration of cleaning or etching baths, resulting in a zero discharge of pollutants.

Countercurrent rinsing of cleaning or etching rinses to reduce normalized discharge flows.

Alternative fluxing methods (e.g., dry air pollution control and in-line refining) to eliminate the discharge from degassing operations.

Recycling of heat treatment contact cooling water streams through cooling towers to reduce their normalized discharge flow.

Recycling of air pollution control system streams associated with cleaning or etching and forging operations to reduce their their normalized discharge flows.

Use of extrusion die cleaning rinse for bath make-up water.

Pretreatment Option 3 is based on:

All of Pretreatment Option 2, plus multimedia filtration.

PSES AND PSNS OPTION SELECTION

In the aluminum forming category, the Agency has concluded that the pollutants that would be regulated, primarily toxic metals under these proposed standards, pass through a POTW. The average percentage of these pollutants removed by a well-operated POTW meeting secondary treatment requirements nationwide is about 50 percent (ranging from 20 to 65 percent), whereas the percentage that can be removed by an aluminum forming direct discharger applying the best available technology economically achievable is expected to be about 98 percent (ranging from 67 to 100 percent). Accordingly, these pollutants pass through a POTW. Pass-through and concentration in POTW sludges are discussed in detail in Section VI for each toxic pollutant (organics and metals) that was considered for regulation under pretreatment standards.

Pretreatment Option 2 is selected as the regulatory approach for pretreatment standards for existing sources on the basis that it achieves effective removal of toxic pollutants at a reasonable cost. In addition, as discussed above, a well-operated POTW can achieve removal of the pollutants that are discharged after the application of Pretreatment Option 2 technology. As summarized above in this section and in more detail in Section X, the basis of Pretreatment Option 2 (BAT Option 2) is reduction or elimination of flow for many of the waste streams associated with aluminum forming operations.

Pretreatment Option 3 is selected as the regulatory approach for pretreatment standards for new sources on the basis that new sources can implement more advanced levels of treatment without incurring the retrofit costs that would be required for existing sources. Pretreatment Option 3 achieves effective removal of toxic pollutants at a reasonable cost. As summarized above in this section and in more detail in Section X, the basis of Pretreatment Option 3 (BAT Option 3) is reduction or elimination of flow for many of the waste streams associated with aluminum forming operations and the application of filtration technology prior to final discharge.

The data relied upon for selection of PSNS were primarily the data developed for existing sources which included costs on a plant-by-plant basis along with retrofit costs where applicable. The Agency believes that compliance costs could be lower for new sources than the cost estimates for equivalent existing sources, because production processes can be designed on the basis of lower flows and there will be no costs associated with retrofitting the in-process controls. Therefore, new sources regardless of whether they are plants with major modifications or greenfield sites, will have costs that are not greater than the costs that existing sources would incur in achieving equivalent pollutant discharge reduction. Based on this the Agency believes that the selected PSNS (Pretreatment Option 3) is appropriate for both greenfield sites and existing sites undergoing major modifications (e.g., a primary aluminum plant which installs a rolling operation).

For existing sources, the Agency is continuing to consider Pretreatment Option 3, the addition of a polishing filter as a basis for pretreatment standards since a more effective removal of toxic pollutants could be achieved. The technological and economic feasibility of this option will be studied further, comments are sought on this option and will be considered prior to promulgation. EPA may promulgate PSES based on options which include flow reduction plus filtration.

Costs and Environmental Benefits of Treatment Options

As a means of evaluating the economic achievability of each of these options, the Agency developed estimates of the compliance costs and benefits. Estimates of capital and annual costs for the six pretreatment options were prepared for each subcategory as an aid in choosing the best pretreatment option. The cost estimates for 54 of 66 indirect dischargers are presented in Table XII-1.

The cost methodology has been described in detail in Sections VIII and X. The benefit methodology has been described in detail in Section X. The pollutant reduction benefit estimates for all six subcategories are presented in Tables XII-2 through XII-7.

REGULATED POLLUTANT PARAMETERS

The same pollutants have been selected for regulation under the pretreatment standards for each of the six subcategories. The toxic metals selected are chromium (total), cyanide (total), and zinc. Aluminum is not limited because aluminum in its hydroxide form is used by POTW as a flocculant to aid in the settling and removal of suspended solids. Therefore, aluminum in limited quantities, does not pass through or interfere with a POTW;

rather it is a necessary aid to its operation. TSS is not regulated since it is adequately handled by a POTW and will not interfere with their operation.

Toxic organic pollutants found in aluminum forming wastewaters may pass through a POTW; therefore, the Agency proposes to establish a pretreatment limitation on the discharge of total toxic organics (TTO) to a POTW. This limitation is based on the effluent concentrations presented in Table X-21 (p. 951) and discussed in Section X under Regulated Pollutant Parameters (p. 891). This limitation is achievable by treatment technologies that effectively remove oil and grease. Analysis of toxic organics is costly and requires delicate and sensitive equipment. Therefore, the Agency proposes to establish as an alternative to monitoring for total toxic organics an oil and grease limit for which the analysis is much less costly and frequently can be done at the plant.

PRETREATMENT STANDARDS

Mass-based limitations, which are the only method used for designating pretreatment standards, are set forth below. Regulation on the basis of concentration only is not appropriate because it will not adequately control the amount of toxic pollutants released, since a plant can achieve a concentration-based standard by dilution of its wastewater without actually removing any pollutant mass. Therefore, the Agency is not proposing concentration-based pretreatment standards (40 CFR Part 403.6).

The regulatory production normalized flows for PSES and PSNS are equivalent to BAT Option 2 flows. Production normalized flows for Pretreatment Options 4 and 5 are based on the flow reduction controls of BAT Option 2 plus thermal emulsion breaking to achieve zero discharge of all emulsified wastewater streams.

Pretreatment Options 1, 2, and 4 are based on the treatment effectiveness values for lime and settle technology, as presented in Table VII-21 (p. 748). Pretreatment Options 3 and 5 are based on the treatment effectiveness values for lime, settle, and filter technology, as presented in Table VII-21 (p. 748). The mass of pollutant allowed to be discharged per mass of product is calculated by multiplying the appropriate effectiveness value (one day maximum and ten day average values) (mg/l) by the production normalized flow (l/kkg). When these calculations are performed, the mass-based PSES and PSNS can be derived for the selected options (Pretreatment Options 2 and 3, respectively). The PSES values are presented for each of the six subcategories in Tables XII-8 through XII-13. The PSNS values are presented for each of the six subcategories in Tables XII-14 through XII-19. Mass-based PSES for the other option which may be

considered for promulgation can be calculated in the same manner. The Agency recognizes that very few of the 66 indirect dischargers currently have BAT level treatment-in-place. Therefore, it is anticipated that plants will require three years to be in compliance with the pretreatment standards.

Table XII-1

CAPITAL AND ANNUAL COST ESTIMATES FOR BAT OPTIONS
INDIRECT DISCHARGERS

Subcategory	Option 1	Option 2	Option 3	Option 4	Option 5	Option 6
Rolling with Neat Oils						
Capital	2,603,200	2,773,100	3,212,300	3,182,800	3,662,000	-
Annual	1,447,500	1,495,300	1,605,200	1,605,000	1,711,000	-
Rolling with Emulsions						
Capital	932,600	1,061,000	1,213,400	1,226,100	1,378,500	-
Annual	512,600	551,000	589,300	722,100	775,500	-
Extrusion						
Capital	10,672,000	11,683,000	12,640,200	11,377,300	12,379,000	-
Annual	4,898,300	5,544,600	5,771,200	5,863,000	6,071,800	-
Forging						
Capital	3,420,000	3,619,100	3,961,600	3,563,000	3,905,400	3,937,200
Annual	1,677,400	1,732,600	1,824,200	1,717,500	1,809,300	1,858,900
Drawing with Neat Oils						
Capital	983,800	1,077,600	1,162,400	1,021,500	1,106,200	-
Annual	501,700	507,800	532,100	493,700	517,900	-
Drawing with Emulsions or Soaps						
Capital	332,200	332,200	343,800	367,300	378,900	-
Annual	172,500	172,500	175,600	188,800	191,900	-

Table XII-2

TREATMENT PERFORMANCE - INDIRECT DISCHARGERS
ROLLING WITH NEAT OILS SUBCATEGORY

	Pollutant	Raw Waste	Option 1		Option 2	
	Flow (l/yr)	110.9×10^6	110.9×10^6		38.04×10^6	
		(kg/yr)	Removed (kg/yr)	Discharged (kg/yr)	Removed (kg/yr)	Discharged (kg/yr)
118.	Cadmium	0.6	0.0	0.6	0.0	0.6
119.	Chromium	185.1	176.2	8.9	182.0	3.0
120.	Copper	32.6	0.0	32.6	10.5	22.1
121.	Cyanide	1.0	0.0	1.0	0.0	1.0
122.	Lead	142.0	128.7	13.3	137.4	4.6
124.	Nickel	4.9	0.0	4.9	0.0	4.9
128.	Zinc	33.9	0.6	33.3	22.5	11.4
	Aluminum	910.4	787.2	123.1	868.1	42.2
	Oil and Grease	172,645.5	171,536.3	1,109.2	172,265.1	380.4
	TSS	20,546.8	19,215.8	1,331.0	20,090.3	456.5
	Total Toxic Organics	259.0	257.3	1.7	258.4	0.6
	Total Toxic Metals	399.1	305.5	93.6	352.4	46.6
	Total Toxics	659.1	562.8	96.3	610.8	48.2
	Total Conventionals	193,192.3	190,752.1	2,440.2	192,355.4	836.9
	Total Pollutants	194,761.8	192,102.1	2,659.6	193,834.3	927.3
	Sludge	-----	979,440		990,160	

Table XII-2 (Continued)

TREATMENT PERFORMANCE - INDIRECT DISCHARGERS
ROLLING WITH NEAT OILS SUBCATEGORY

	Pollutant	Option 3		Option 4		Option 5	
	Flow (l/yr)	38.04×10^6		28.30×10^6		28.30×10^6	
		Removed (kg/yr)	Discharged (kg/yr)	Removed (kg/yr)	Discharged (kg/yr)	Removed (kg/yr)	Discharged (kg/yr)
118.	Cadmium	0.0	0.6	0.0	0.6	0.0	0.6
119.	Chromium	182.4	2.7	182.8	2.3	183.1	2.0
120.	Copper	17.7	14.8	16.1	16.4	21.5	11.0
121.	Cyanide	0.0	1.0	0.0	1.0	0.0	1.0
122.	Lead	138.9	3.0	138.6	3.4	139.7	2.3
124.	Nickel	0.0	4.9	0.0	4.9	0.0	4.9
128.	Zinc	25.1	8.7	25.4	8.5	27.4	6.5
	Aluminum	882.2	28.1	878.9	31.4	889.4	20.9
	Oil and Grease	172,265.1	380.4	172,362.5	283.0	172,362.5	283.0
	TSS	20,447.9	98.9	20,207.1	339.7	20,473.2	73.6
	Total Toxic Organics	258.4	0.6	258.5	0.4	258.5	0.4
	Total Toxic Metals	364.1	34.7	362.9	36.1	371.7	27.3
	Total Toxics	622.5	36.3	621.4	37.5	630.2	28.7
	Total Conventionals	192,713.0	479.3	192,569.6	622.7	192,835.7	356.6
	Total Pollutants	194,217.7	543.7	194,069.9	691.6	194,355.3	406.2
	Sludge	992,450		991,630		993,340	

Note: Total Toxic Metals - Cadmium + Chromium + Copper + Lead + Nickel + Zinc
Total Toxics - Total Toxic Organics + Total Toxic Metals + Cyanide
Total Conventionals - Oil and Grease + TSS
Total Pollutants - Total Toxics + Total Conventionals + Aluminum

Table XII-3

TREATMENT PERFORMANCE - INDIRECT DISCHARGERS
ROLLING WITH EMULSIONS SUBCATEGORY

	Pollutant	Raw Waste	Option 1		Option 2	
	Flow (l/yr)	2.696×10^9	972.9×10^6		665.4×10^6	
		(kg/yr)	Removed (kg/yr)	Discharged (kg/yr)	Removed (kg/yr)	Discharged (kg/yr)
118.	Cadmium	4.9	0.0	4.9	0.0	4.9
119.	Chromium	739.8	665.4	74.4	687.0	52.8
120.	Copper	406.9	0.0	406.9	23.3	383.6
121.	Cyanide	20.5	0.0	20.5	0.0	20.5
122.	Lead	1,122.7	1,010.3	112.4	1,042.6	80.1
124.	Nickel	65.5	0.0	65.5	0.0	65.5
128.	Zinc	886.2	607.4	278.9	688.1	198.2
	Aluminum	30,568.2	29,315.7	1,252.5	29,614.3	953.9
	Oil and Grease	571,803.8	561,944.9	9,858.9	564,635.1	7,168.7
	TSS	331,656.5	319,981.0	11,675.4	323,209.3	8,447.2
	Total Toxic Organics	857.7	842.9	14.8	847.0	10.8
	Total Toxic Metals	3,226.0	2,283.1	943.0	2,441.0	785.1
	Total Toxics	4,104.2	3,126.0	978.3	3,288.0	816.4
	Total Conventionals	903,460.3	881,925.9	21,534.3	887,844.4	15,615.9
	Total Pollutants	938,132.7	914,367.6	23,765.1	920,746.7	17,386.2
	Sludge	-----	5,259,360		5,298,860	

Table XII-3 (Continued)

TREATMENT PERFORMANCE - INDIRECT DISCHARGERS
ROLLING WITH EMULSIONS SUBCATEGORY

	Pollutant	Option 3		Option 4		Option 5	
	Flow (l/yr)	665.4×10^6		640.1×10^6		640.1×10^6	
		Removed (kg/yr)	Discharged (kg/yr)	Removed (kg/yr)	Discharged (kg/yr)	Removed (kg/yr)	Discharged (kg/yr)
118.	Cadmium	0.0	4.9	0.0	4.9	0.0	4.9
119.	Chromium	693.6	46.2	689.0	50.8	695.3	44.5
120.	Copper	148.8	258.1	38.0	368.9	158.7	248.2
121.	Cyanide	0.0	20.5	0.0	20.5	0.0	20.5
122.	Lead	1,069.0	53.7	1,045.6	77.1	1,071.0	51.7
124.	Nickel	0.0	65.5	0.0	65.5	0.0	65.5
128.	Zinc	734.3	151.9	695.7	190.6	740.1	146.1
	Aluminum	29,858.7	709.5	29,642.4	925.8	29,877.5	690.7
	Oil and Grease	564,635.1	7,168.7	564,888.5	6,915.4	564,888.5	6,915.4
	TSS	329,418.8	2,237.7	323,513.4	8,143.1	329,484.7	2,171.8
	Total Toxic Organics	847.0	10.8	847.3	10.4	847.3	10.4
	Total Toxic Metals	2,645.7	580.3	2,468.3	757.8	2,665.1	560.9
	Total Toxics	3,492.7	611.6	3,315.6	788.7	3,512.4	591.8
	Total Conventionals	894,053.9	9,406.4	888,401.9	15,058.5	894,373.2	9,087.2
	Total Pollutants	927,405.3	10,727.5	921,359.9	16,773.0	927,763.1	10,369.7
	Sludge	5,338,630		5,302,690		5,340,930	

Note: Total Toxic Metals - Cadmium + Chromium + Copper + Lead + Nickel + Zinc
Total Toxics - Total Toxic Organics + Total Toxic Metals + Cyanide
Total Conventionals - Oil and Grease + TSS
Total Pollutants - Total Toxics + Total Conventionals + Aluminum

Table XII-4

TREATMENT PERFORMANCE - INDIRECT DISCHARGERS
EXTRUSION SUBCATEGORY

	Pollutant	Raw Waste	Option 1		Option 2	
	Flow (l/yr)	5.353×10^9	4.148×10^9		1.164×10^9	
		(kg/yr)	Removed (kg/yr)	Discharged (kg/yr)	Removed (kg/yr)	Discharged (kg/yr)
118.	Cadmium	22.0	0.0	22.0	0.0	22.0
119.	Chromium	78,225.3	77,909.0	316.3	78,140.8	84.5
120.	Copper	3,130.1	835.0	2,295.1	2,515.6	614.5
121.	Cyanide	899.1	620.6	278.5	823.4	75.7
122.	Lead	1,066.8	588.4	478.3	936.1	130.6
124.	Nickel	1,649.3	0.0	1,649.3	1,047.3	602.0
128.	Zinc	5,577.0	4,390.9	1,186.1	5,260.1	316.9
	Aluminum	491,085.9	485,702.6	5,383.3	488,918.9	2,167.0
	Oil and Grease	159,998.8	117,930.0	42,068.8	146,905.3	13,093.5
	TSS	577,563.4	527,778.7	49,784.7	562,549.1	15,014.3
	Total Toxic Organics	240.0	176.9	63.1	220.4	19.6
	Total Toxic Metals	89,670.5	83,723.3	5,947.1	87,899.9	1,770.5
	Total Toxics	90,809.6	84,520.8	6,288.7	88,943.7	1,865.8
	Total Conventionals	737,562.2	645,708.7	91,853.5	709,454.4	28,107.8
	Total Pollutants	1,319,457.7	1,215,932.1	103,525.5	1,287,317.0	32,140.6
	Sludge	-----	17,819,900		18,303,250	

Table XII-4 (Continued)

TREATMENT PERFORMANCE - INDIRECT DISCHARGERS
EXTRUSION SUBCATEGORY

	Pollutant	Option 3		Option 4		Option 5	
	Flow (l/yr)	1.164×10^9		1.162×10^9		1.162×10^9	
		Removed (kg/yr)	Discharged (kg/yr)	Removed (kg/yr)	Discharged (kg/yr)	Removed (kg/yr)	Discharged (kg/yr)
118.	Cadmium	0.0	22.0	0.0	22.0	0.0	22.0
119.	Chromium	78,151.4	73.9	78,140.9	84.4	78,151.5	73.8
120.	Copper	2,716.3	413.9	2,516.6	613.6	2,716.9	413.2
121.	Cyanide	847.7	51.4	823.5	75.6	847.8	51.3
122.	Lead	978.4	88.4	936.3	130.4	978.5	88.3
124.	Nickel	1,417.0	232.4	1,048.3	601.1	1,417.3	232.0
128.	Zinc	5,334.1	242.9	5,260.7	316.4	5,334.5	242.5
	Aluminum	489,309.7	1,776.2	489,920.7	2,165.2	489,310.9	1,775.0
	Oil and Grease	146,905.3	13,093.5	146,922.1	13,076.7	146,922.1	13,076.7
	TSS	572,447.3	5,086.1	562,569.3	14,994.1	572,481.7	5,081.8
	Total Toxic Organics	220.4	19.6	220.4	19.6	220.4	19.6
	Total Toxic Metals	88,597.2	1,073.5	87,902.8	1,767.9	88,598.7	1,071.8
	Total Toxics	89,665.3	1,144.5	88,946.7	1,863.1	89,666.9	1,142.7
	Total Conventionals	719,382.6	18,179.6	709,491.4	28,070.8	719,403.8	18,158.5
	Total Pollutants	1,298,357.6	21,100.3	1,287,358.8	32,099.1	1,298,381.6	21,076.2
	Sludge	18,381,220		18,331,680		18,381,390	

Note: Total Toxic Metals - Cadmium + Chromium + Copper + Lead + Nickel + Zinc
Total Toxics - Total Toxic Organics + Total Toxic Metals + Cyanide
Total Conventionals - Oil and Grease + TSS
Total Pollutants - Total Toxics + Total Conventionals + Aluminum

Table XII-5

TREATMENT PERFORMANCE - INDIRECT DISCHARGERS
FORGING SUBCATEGORY

	Pollutant	Raw Waste	Option 1		Option 2		Option 3	
	Flow (l/yr)	2.166×10^9	2.166×10^9		279.8×10^6		279.8×10^6	
		(kg/yr)	Removed (kg/yr)	Discharged (kg/yr)	Removed (kg/yr)	Discharged (kg/yr)	Removed (kg/yr)	Discharged (kg/yr)
118.	Cadmium	12.9	0.0	12.9	0.0	12.9	4.1	8.8
119.	Chromium	4,282.9	4,180.4	102.4	4,268.5	14.4	4,270.3	12.6
120.	Copper	3,515.1	2,763.5	751.6	3,401.6	113.4	3,435.9	79.2
121.	Cyanide	40.1	0.0	40.1	19.5	20.6	23.6	16.5
122.	Lead	1,555.2	1,383.8	171.4	1,515.8	39.3	1,523.0	32.1
124.	Nickel	585.4	0.0	585.4	482.6	102.8	545.7	39.7
128.	Zinc	7,292.8	6,908.6	384.2	7,238.7	54.1	7,251.3	41.5
	Aluminum	437,108.0	431,169.6	5,938.3	432,390.9	4,717.1	432,457.6	4,650.3
	Oil and Grease	45,262.6	20,932.9	24,329.7	31,935.5	13,327.1	31,935.5	13,327.1
	TSS	316,272.2	290,255.9	26,016.3	303,459.0	12,813.2	305,154.2	11,118.0
	Total Toxic Organics	82.7	31.4	51.3	47.9	34.8	47.9	34.8
	Total Toxic Metals	17,244.3	15,236.3	2,007.9	16,907.2	336.9	17,030.3	213.9
	Total Toxics	17,367.1	15,267.7	2,099.3	16,974.6	392.3	17,101.8	265.2
	Total Conventionals	361,534.8	311,188.8	50,346.0	335,394.5	26,140.3	337,089.7	24,445.1
	Total Pollutants	816,009.9	757,626.1	58,383.6	784,760.0	31,249.7	786,649.1	29,360.6
	Sludge	-----	13,832,780		14,017,230		14,030,570	

Table XII-5 (Continued)

TREATMENT PERFORMANCE - INDIRECT DISCHARGERS
FORGING SUBCATEGORY

	Pollutant	Option 4		Option 5		Option 6	
	Flow (l/yr)	279.5×10^6		279.5×10^6		279.5×10^6	
		Removed (kg/yr)	Discharged (kg/yr)	Removed (kg/yr)	Discharged (kg/yr)	Removed (kg/yr)	Discharged (kg/yr)
118.	Cadmium	0.0	12.9	4.1	8.8	4.1	8.8
119.	Chromium	4,268.5	14.4	4,270.3	12.6	4,270.3	12.6
120.	Copper	3,401.8	113.3	3,436.0	79.1	3,436.0	79.1
121.	Cyanide	19.5	20.6	23.7	16.4	23.7	16.4
122.	Lead	1,515.9	39.3	1,523.1	32.1	1,523.1	32.1
124.	Nickel	482.7	102.7	545.7	39.6	545.7	39.6
128.	Zinc	7,238.8	54.0	7,251.4	41.4	7,251.4	41.4
	Aluminum	432,391.2	4,716.8	432,457.8	4,650.1	432,457.8	4,650.1
	Oil and Grease	31,937.9	13,324.7	31,937.9	13,324.7	31,937.9	13,324.7
	TSS	303,461.9	12,810.3	305,154.8	11,117.4	305,154.8	11,117.4
	Total Toxic Organics	47.9	34.8	47.9	34.8	62.7	20.0
	Total Toxic Metals	16,907.7	336.6	17,030.6	213.6	17,030.6	213.6
	Total Toxics	16,975.1	392.0	17,102.2	264.8	17,117.0	250.0
	Total Conventionals	335,399.8	26,135.0	337,092.7	24,442.1	337,092.7	24,442.1
	Total Pollutants	784,766.1	31,243.8	786,652.7	29,357.0	786,667.5	29,342.2
	Sludge	14,017,280		14,030,600		14,030,600	

Note: Total Toxic Metals - Cadmium + Chromium + Copper + Lead + Nickel + Zinc
Total Toxics - Total Toxic Organics + Total Toxic Metals + Cyanide
Total Conventionals - Oil and Grease + TSS
Total Pollutants - Total Toxics + Total Conventionals + Aluminum

Table XII-6

TREATMENT PERFORMANCE - INDIRECT DISCHARGERS
DRAWING WITH NEAT OILS SUBCATEGORY

	Pollutant	Raw Waste	Option 1		Option 2	
	Flow (l/yr)	557.4×10^6	557.4×10^6		79.78×10^6	
		(kg/yr)	Removed (kg/yr)	Discharged (kg/yr)	Removed (kg/yr)	Discharged (kg/yr)
118.	Cadmium	3.2	0.0	3.2	0.0	3.2
119.	Chromium	5,216.3	5,188.0	28.2	5,211.7	4.5
120.	Copper	817.9	611.2	206.7	782.9	35.0
121.	Cyanide	59.0	32.5	26.5	53.2	5.8
122.	Lead	339.4	293.0	46.4	328.5	10.9
124.	Nickel	138.4	0.0	138.4	106.0	32.4
128.	Zinc	1,822.4	1,716.5	105.9	1,805.3	17.0
	Aluminum	103,424.0	101,990.4	1,434.3	102,319.1	1,105.6
	Oil and Grease	13,274.0	7,084.9	6,189.1	10,045.9	3,228.1
	TSS	77,365.4	70,672.3	6,693.1	74,225.5	3,139.9
	Total Toxic Organics	19.9	10.6	9.3	15.1	4.8
	Total Toxic Metals	8,337.6	7,808.7	528.8	8,234.4	103.0
	Total Toxics	8,416.5	7,851.8	564.6	8,302.7	113.6
	Total Conventionals	90,639.4	77,757.2	12,882.2	84,271.4	6,368.0
	Total Pollutants	202,479.9	187,599.4	14,881.1	194,893.2	7,587.2
	Sludge	-----	3,339,700		3,389,050	

Table XII-6 (Continued)

TREATMENT PERFORMANCE - INDIRECT DISCHARGERS
DRAWING WITH NEAT OILS SUBCATEGORY

	Pollutant	Option 3		Option 4		Option 5	
	Flow (l/yr)	79.78×10^6		79.61×10^6		79.61×10^6	
		Removed (kg/yr)	Discharged (kg/yr)	Removed (kg/yr)	Discharged (kg/yr)	Removed (kg/yr)	Discharged (kg/yr)
118.	Cadmium	0.4	2.8	0.0	3.2	0.5	2.8
119.	Chromium	5,212.3	4.0	5,211.7	4.5	5,212.3	4.0
120.	Copper	793.7	24.2	783.0	34.9	793.8	24.1
121.	Cyanide	54.5	4.5	53.2	5.8	54.5	4.5
122.	Lead	330.8	8.6	328.5	10.9	330.8	8.6
124.	Nickel	125.9	12.5	106.1	32.3	126.0	12.5
128.	Zinc	1,809.3	13.1	1,805.4	17.0	1,809.3	13.0
	Aluminum	102,340.1	1,084.6	102,319.3	1,105.4	102,340.2	1,084.5
	Oil and Grease	10,045.9	3,228.1	10,047.7	3,226.3	10,047.7	3,226.3
	TSS	74,759.7	2,605.7	74,227.7	3,137.8	74,760.2	2,605.2
	Total Toxic Organics	15.1	4.8	15.1	4.8	15.1	4.8
	Total Toxic Metals	8,272.4	65.2	8,234.7	102.8	8,272.7	65.0
	Total Toxics	8,342.0	74.5	8,303.0	113.4	8,342.3	74.3
	Total Conventionals	84,805.6	5,833.8	84,275.4	6,364.1	84,807.9	5,831.5
	Total Pollutants	195,487.7	6,992.9	194,897.7	7,582.9	195,490.4	6,990.3
	Sludge	3,393,250		3,389,080		3,393,270	

Note: Total Toxic Metals - Cadmium + Chromium + Copper + Lead + Nickel + Zinc
Total Toxics - Total Toxic Organics + Total Toxic Metals + Cyanide
Total Conventionals - Oil and Grease + TSS
Total Pollutants - Total Toxics + Total Conventionals + Aluminum

Table XII-7

TREATMENT PERFORMANCE - INDIRECT DISCHARGERS
DRAWING WITH EMULSIONS OR SOAPS SUBCATEGORY

	Pollutant	Raw Waste	Option 1		Option 2	
	Flow (l/yr)	134.7×10^6	134.7×10^6		23.56×10^6	
		(kg/yr)	Removed (kg/yr)	Discharged (kg/yr)	Removed (kg/yr)	Discharged (kg/yr)
118.	Cadmium	0.7	0.0	0.7	0.0	0.7
119.	Chromium	202.0	194.7	7.3	200.6	1.5
120.	Copper	175.1	121.7	53.4	163.8	11.3
121.	Cyanide	1.4	0.0	1.4	0.0	1.4
122.	Lead	77.1	65.2	11.8	73.9	3.1
124.	Nickel	29.4	0.0	29.4	18.8	10.7
128.	Zinc	358.0	330.7	27.4	352.4	5.6
	Aluminum	21,421.7	21,099.1	322.6	21,179.7	242.0
	Oil and Grease	11,793.2	10,316.0	1,477.2	11,041.9	751.4
	TSS	16,608.0	14,991.1	1,616.9	15,862.1	745.9
	Total Toxic Organics	17.7	15.5	2.2	16.6	1.1
	Total Toxic Metals	842.3	712.3	130.0	809.5	32.9
	Total Toxics	861.4	727.8	133.6	826.1	35.4
	Total Conventionals	28,401.2	25,307.1	3,094.1	26,904.0	1,497.3
	Total Pollutants	50,684.3	47,134.0	3,550.3	48,909.8	1,774.7
	Sludge	-----	726,980		738,630	

Table XII-7 (Continued)

TREATMENT PERFORMANCE - INDIRECT DISCHARGERS
DRAWING WITH EMULSIONS OR SOAPS SUBCATEGORY

	Pollutant	Option 3		Option 4		Option 5	
	Flow (l/yr)	23.56×10^6		21.30×10^6		21.30×10^6	
		Removed (kg/yr)	Discharged (kg/yr)	Removed (kg/yr)	Discharged (kg/yr)	Removed (kg/yr)	Discharged (kg/yr)
118.	Cadmium	0.0	0.7	0.0	0.7	0.0	0.7
119.	Chromium	200.7	1.3	200.7	1.3	200.9	1.1
120.	Copper	167.4	7.7	165.1	10.0	168.3	6.8
121.	Cyanide	0.1	1.3	0.0	1.4	0.2	1.2
122.	Lead	74.7	2.4	74.2	2.8	74.9	2.2
124.	Nickel	25.3	4.1	20.0	9.4	25.8	3.6
128.	Zinc	353.7	4.3	353.1	4.9	354.3	3.8
	Aluminum	21,186.6	235.1	21,182.2	239.5	21,188.3	233.4
	Oil and Grease	11,041.9	751.4	11,064.5	728.7	11,064.5	728.7
	TSS	16,037.8	570.2	15,889.3	718.7	16,043.6	564.3
	Total Toxic Organics	16.6	1.1	16.6	1.1	16.6	1.1
	Total Toxic Metals	821.8	20.5	813.1	29.1	824.2	18.2
	Total Toxics	838.5	22.9	829.7	31.6	841.0	20.5
	Total Conventionals	27,079.7	1,321.6	26,953.8	1,447.4	27,108.1	1,293.0
	Total Pollutants	49,104.8	1,579.6	48,965.7	1,718.5	49,137.4	1,546.9
	Sludge	739,990		739,010		740,220	

Note: Total Toxic Metals - Cadmium + Chromium + Copper + Lead + Nickel + Zinc
Total Toxics - Total Toxic Organics + Total Toxic Metals + Cyanide
Total Conventionals - Oil and Grease + TSS
Total Pollutants - Total Toxics + Total Conventionals + Aluminum

Table XII-8

PSES FOR THE ROLLING WITH NEAT OILS SUBCATEGORY

Rolling With Neat Oils - Core Waste Streams Without An Annealing Furnace Scrubber

	Pollutant or Pollutant Property	Maximum for Any One Day	Maximum for Monthly Average
	mg/kkg (lb/billion lbs) of aluminum rolled with neat oils		
118	Cadmium	5.31	2.49
119	Chromium	6.96	2.82
120	Copper	31.50	16.58
121	Cyanide	4.81	1.99
122	Lead	2.49	2.16
124	Nickel	23.38	16.58
125	Selenium	19.90	9.95
128	Zinc	22.05	9.28
	Aluminum	75.44	30.84
	Total Toxic Organics (TTO)	11.44	-
	Oil & Grease*	331.60	198.96
	Total Suspended Solids	679.78	331.60
	pH	Within the range of 7.5 to 10.0 at all times.	

Rolling With Neat Oils - Core Waste Streams With An Annealing Furnace Scrubber

	Pollutant or Pollutant Property	Maximum for Any One Day	Maximum for Monthly Average
	mg/kkg (lb/billion lbs) of aluminum rolled with neat oils		
118	Cadmium	13.74	6.44
119	Chromium	18.03	7.30
120	Copper	81.57	42.93
121	Cyanide	12.45	5.15
122	Lead	6.44	5.58
124	Nickel	60.53	42.93
125	Selenium	51.52	25.76
128	Zinc	57.10	24.04
	Aluminum	195.33	79.85
	Total Toxic Organics (TTO)	29.62	-
	Oil & Grease*	858.60	515.16
	Total Suspended Solids	1,760.13	858.60
	pH	Within the range of 7.5 to 10.0 at all times.	

*Alternate monitoring limit - oil and grease may be substituted for TTO.

Table XII-8 (Continued)

PSES FOR THE ROLLING WITH NEAT OILS SUBCATEGORY

Continuous Sheet Casting - Spent Lubricant

	Pollutant or Pollutant Property	Maximum for Any One Day	Maximum for Monthly Average
	mg/kkg (lb/billion lbs) of aluminum cast by continuous methods		
118	Cadmium	0.59	0.28
119	Chromium	0.77	0.31
120	Copper	3.50	1.84
121	Cyanide	0.53	0.22
122	Lead	0.28	0.24
124	Nickel	2.60	1.84
125	Selenium	2.21	1.11
128	Zinc	2.45	1.03
	Aluminum	8.39	3.43
	Total Toxic Organics (TTO)	1.27	-
	Oil & Grease*	36.86	22.12
	Total Suspended Solids	75.56	36.86
	pH	Within the range of 7.5 to 10.0 at all times.	

Solution Heat Treatment - Contact Cooling Water

	Pollutant or Pollutant Property	Maximum for Any One Day	Maximum for Monthly Average
	mg/kkg (lb/billion lbs) of aluminum quenched		
118	Cadmium	651.84	305.55
119	Chromium	855.54	346.29
120	Copper	3,870.30	2,037.00
121	Cyanide	590.73	244.44
122	Lead	305.55	264.81
124	Nickel	2,872.17	2,037.00
125	Selenium	2,444.40	1,222.20
128	Zinc	2,709.21	1,140.72
	Aluminum	9,268.35	3,788.82
	Total Toxic Organics (TTO)	1,405.53	-
	Oil & Grease*	40,740.00	24,444.00
	Total Suspended Solids	83,517.00	40,740.00
	pH	Within the range of 7.5 to 10.0 at all times.	

*Alternate monitoring limit - oil and grease may be substituted for TTO.

Table XII-8 (Continued)

PSES FOR THE ROLLING WITH NEAT OILS SUBCATEGORY

Cleaning or Etching - Bath

	Pollutant or Pollutant Property	Maximum for Any One Day	Maximum for Monthly Average
	mg/kkg (lb/billion lbs) of aluminum cleaned or etched		
118	Cadmium	0.00	0.00
119	Chromium	0.00	0.00
120	Copper	0.00	0.00
121	Cyanide	0.00	0.00
122	Lead	0.00	0.00
124	Nickel	0.00	0.00
125	Selenium	0.00	0.00
128	Zinc	0.00	0.00
	Aluminum	0.00	0.00
	Total Toxic Organics (TTO)	0.00	-
	Oil & Grease*	0.00	0.00
	Total Suspended Solids	0.00	0.00
	pH	Within the range of 7.5 to 10.0 at all times.	

Cleaning or Etching - Rinse

	Pollutant or Pollutant Property	Maximum for Any One Day	Maximum for Monthly Average
	mg/kkg (lb/billion lbs) of aluminum cleaned or etched		
118	Cadmium	539.52	252.90
119	Chromium	708.12	286.62
120	Copper	3,203.40	1,686.00
121	Cyanide	488.94	202.32
122	Lead	252.90	219.18
124	Nickel	2,377.26	1,686.00
125	Selenium	2,023.20	1,011.60
128	Zinc	2,242.38	944.16
	Aluminum	7,671.30	3,135.96
	Total Toxic Organics (TTO)	1,163.34	-
	Oil & Grease*	33,720.00	20,232.00
	Total Suspended Solids	69,126.00	33,720.00
	pH	Within the range of 7.5 to 10.0 at all times.	

*Alternate monitoring limit - oil and grease may be substituted for TTO.

Table XII-8 (Continued)

PSES FOR THE ROLLING WITH NEAT OILS SUBCATEGORY

Cleaning or Etching - Scrubber Liquor

	Pollutant or Pollutant Property	Maximum for Any One Day	Maximum for Monthly Average
	mg/kkg (lb/billion lbs) of aluminum cleaned or etched		
118	Cadmium	618.56	289.95
119	Chromium	811.86	328.61
120	Copper	3,672.70	1,933.00
121	Cyanide	560.57	231.96
122	Lead	289.95	251.29
124	Nickel	2,725.53	1,933.00
125	Selenium	2,319.60	1,159.80
128	Zinc	2,570.89	1,082.48
	Aluminum	8,795.15	3,595.38
	Total Toxic Organics (TTO)	1,333.77	-
	Oil & Grease*	38,660.00	23,196.00
	Total Suspended Solids	79,253.00	38,660.00
	pH	Within the range of 7.5 to 10.0 at all times.	

*Alternate monitoring limit - oil and grease may be substituted for TTO.

Table XII-9

PSES FOR THE ROLLING WITH EMULSIONS SUBCATEGORY

Rolling With Emulsions - Core Waste Streams

	Pollutant or Pollutant Property	Maximum for Any One Day	Maximum for Monthly Average
	mg/kkg (lb/billion lbs) of aluminum rolled with emulsions		
118	Cadmium	29.15	13.66
119	Chromium	38.26	15.49
120	Copper	173.07	91.09
121	Cyanide	26.42	10.93
122	Lead	13.66	11.84
124	Nickel	128.44	91.09
125	Selenium	109.31	54.65
128	Zinc	121.15	51.01
	Aluminum	414.46	169.43
	Total Toxic Organics (TTO)	62.85	-
	Oil & Grease*	1,821.80	1,093.08
	Total Suspended Solids	3,734.69	1,821.80
	pH	Within the range of 7.5 to 10.0 at all times.	

Direct Chill Casting - Contact Cooling Water

	Pollutant or Pollutant Property	Maximum for Any One Day	Maximum for Monthly Average
	mg/kkg (lb/billion lbs) of aluminum cast by direct chill methods		
118	Cadmium	639.68	299.85
119	Chromium	839.58	339.83
120	Copper	3,798.10	1,999.00
121	Cyanide	579.71	239.88
122	Lead	299.85	259.87
124	Nickel	2,818.59	1,999.00
125	Selenium	2,398.80	1,199.40
128	Zinc	2,658.67	1,119.44
	Aluminum	9,095.45	3,718.14
	Total Toxic Organics (TTO)	1,379.31	-
	Oil & Grease*	39,980.00	23,988.00
	Total Suspended Solids	81,959.00	39,980.00
	pH	Within the range of 7.5 to 10.0 at all times.	

*Alternate monitoring limit - oil and grease may be substituted for TTO.

Table XII-9 (Continued)

PSES FOR THE ROLLING WITH EMULSIONS SUBCATEGORY

Solution Heat Treatment - Contact Cooling Water

	Pollutant or Pollutant Property	Maximum for Any One Day	Maximum for Monthly Average
		mg/kkg (lb/billion lbs) of aluminum quenched	
118	Cadmium	651.84	305.55
119	Chromium	855.54	346.29
120	Copper	3,870.30	2,037.00
121	Cyanide	590.73	244.44
122	Lead	305.55	264.81
124	Nickel	2,872.17	2,037.00
125	Selenium	2,444.40	1,220.20
128	Zinc	2,709.21	1,140.72
	Aluminum	9,268.35	3,788.82
	Total Toxic Organics (TTO)	1,405.53	-
	Oil & Grease*	40,740.00	24,444.00
	Total Suspended Solids	83,517.00	40,740.00
	pH	Within the range of 7.5 to 10.0 at all times.	

Cleaning or Etching - Bath

	Pollutant or Pollutant Property	Maximum for Any One Day	Maximum for Monthly Average
		mg/kkg (lb/billion lbs) of aluminum cleaned or etched	
118	Cadmium	0.00	0.00
119	Chromium	0.00	0.00
120	Copper	0.00	0.00
121	Cyanide	0.00	0.00
122	Lead	0.00	0.00
124	Nickel	0.00	0.00
125	Selenium	0.00	0.00
128	Zinc	0.00	0.00
	Aluminum	0.00	0.00
	Total Toxic Organics (TTO)	0.00	-
	Oil & Grease*	0.00	0.00
	Total Suspended Solids	0.00	0.00
	pH	Within the range of 7.5 to 10.0 at all times.	

*Alternate monitoring limit - oil and grease may be substituted for TTO.

Table XII-9 (Continued)

PSES FOR THE ROLLING WITH EMULSIONS SUBCATEGORY

Cleaning or Etching - Rinse

	Pollutant or Pollutant Property	Maximum for Any One Day	Maximum for Monthly Average
	mg/kkg (lb/billion lbs) of aluminum cleaned or etched		
118	Cadmium	539.52	252.90
119	Chromium	708.12	286.62
120	Copper	3,203.40	1,686.00
121	Cyanide	488.94	202.32
122	Lead	252.90	219.18
124	Nickel	2,377.26	1,686.00
125	Selenium	2,023.20	1,011.60
128	Zinc	2,242.38	944.16
	Aluminum	7,671.30	3,135.96
	Total Toxic Organics (TTO)	1,163.34	-
	Oil & Grease*	33,720.00	20,232.00
	Total Suspended Solids	69,126.00	33,720.00
	pH	Within the range of 7.5 to 10.0 at all times.	

Cleaning or Etching - Scrubber Liquor

	Pollutant or Pollutant Property	Maximum for Any One Day	Maximum for Monthly Average
	mg/kkg (lb/billion lbs) of aluminum cleaned or etched		
118	Cadmium	618.56	289.95
119	Chromium	811.86	328.61
120	Copper	3,672.70	1,933.00
121	Cyanide	560.57	231.96
122	Lead	289.95	251.29
124	Nickel	2,725.53	1,933.00
125	Selenium	2,319.60	1,159.80
128	Zinc	2,570.89	1,082.48
	Aluminum	8,795.15	3,595.38
	Total Toxic Organics (TTO)	1,333.77	-
	Oil & Grease*	38,660.00	23,196.00
	Total Suspended Solids	79,253.00	38,660.00
	pH	Within the range of 7.5 to 10.0 at all times.	

*Alternate monitoring limit - oil and grease may be substituted for TTO.

Table XII-10

PSES FOR THE EXTRUSION SUBCATEGORY

Extrusion - Core Waste Streams

Pollutant or Pollutant Property		Maximum for Any One Day	Maximum for Monthly Average
		mg/kkg (lb/billion lbs) of aluminum extruded	
118	Cadmium	95.39	44.72
119	Chromium	125.20	50.68
120	Copper	566.39	298.10
121	Cyanide	86.45	35.77
122	Lead	44.72	38.75
124	Nickel	420.32	298.10
125	Selenium	357.72	178.86
128	Zinc	396.47	166.94
	Aluminum	1,356.36	554.47
	Total Toxic Organics (TTO)	205.69	-
	Oil & Grease*	5,962.00	3,577.20
	Total Suspended Solids	12,222.10	5,962.00
	pH	Within the range of 7.5 to 10.0 at all times.	

Direct Chill Casting - Contact Cooling Water

Pollutant or Pollutant Property		Maximum for Any One Day	Maximum for Monthly Average
		mg/kkg (lb/billion lbs) of aluminum cast by direct chill methods	
118	Cadmium	639.68	299.85
119	Chromium	839.58	339.83
120	Copper	3,798.10	1,999.00
121	Cyanide	579.71	239.88
122	Lead	299.85	259.87
124	Nickel	2,818.59	1,999.00
125	Selenium	2,398.80	1,199.40
128	Zinc	2,658.67	1,119.44
	Aluminum	9,095.45	3,718.14
	Total Toxic Organics (TTO)	1,379.31	-
	Oil & Grease*	39,980.00	23,988.00
	Total Suspended Solids	81,959.00	39,980.00
	pH	Within the range of 7.5 to 10.0 at all times.	

*Alternate monitoring limit - oil and grease may be substituted for TTO.

Table XII-10 (Continued)

PSES FOR THE EXTRUSION SUBCATEGORY

Solution and Press Heat Treatment - Contact Cooling Water

Pollutant or Pollutant Property		Maximum for Any One Day	Maximum for Monthly Average
		mg/kkg (lb/billion lbs) of aluminum quenched	
118	Cadmium	651.84	305.55
119	Chromium	855.54	346.29
120	Copper	3,870.30	2,037.00
121	Cyanide	590.73	244.44
122	Lead	305.55	264.81
124	Nickel	2,872.17	2,037.00
125	Selenium	2,444.40	1,222.20
128	Zinc	2,709.21	1,140.72
	Aluminum	9,268.35	3,788.82
	Total Toxic Organics (TTO)	1,405.53	-
	Oil & Grease*	40,740.00	24,444.00
	Total Suspended Solids	83,517.00	40,740.00
	pH	Within the range of 7.5 to 10.0 at all times.	

Cleaning or Etching - Bath

Pollutant or Pollutant Property		Maximum for Any One Day	Maximum for Monthly Average
		mg/kkg (lb/billion lbs) of aluminum cleaned or etched	
118	Cadmium	0.00	0.00
119	Chromium	0.00	0.00
120	Copper	0.00	0.00
121	Cyanide	0.00	0.00
122	Lead	0.00	0.00
124	Nickel	0.00	0.00
125	Selenium	0.00	0.00
128	Zinc	0.00	0.00
	Aluminum	0.00	0.00
	Total Toxic Organics (TTO)	0.00	-
	Oil & Grease*	0.00	0.00
	Total Suspended Solids	0.00	0.00
	pH	Within the range of 7.5 to 10.0 at all times.	

*Alternate monitoring limit - oil and grease may be substituted for TTO.

Table XII-10 (Continued)

PSES FOR THE EXTRUSION SUBCATEGORY

Cleaning or Etching - Rinse

	Pollutant or Pollutant Property	Maximum for Any One Day	Maximum for Monthly Average
	mg/kkg (lb/billion lbs) of aluminum cleaned or etched		
118	Cadmium	539.52	252.90
119	Chromium	708.12	286.62
120	Copper	3,203.40	1,686.00
121	Cyanide	488.94	202.32
122	Lead	252.90	219.18
124	Nickel	2,377.26	1,686.00
125	Selenium	2,023.20	1,011.60
128	Zinc	2,242.38	944.16
	Aluminum	7,671.30	3,135.96
	Total Toxic Organics (TTO)	1,163.34	-
	Oil & Grease*	33,720.00	20,232.00
	Total Suspended Solids	69,126.00	33,720.00
	pH	Within the range of 7.5 to 10.0 at all times.	

Cleaning or Etching - Scrubber Liquor

	Pollutant or Pollutant Property	Maximum for Any One Day	Maximum for Monthly Average
	mg/kkg (lb/billion lbs) of aluminum cleaned or etched		
118	Cadmium	618.56	289.95
119	Chromium	811.86	328.61
120	Copper	3,672.70	1,933.00
121	Cyanide	560.57	231.96
122	Lead	289.95	251.29
124	Nickel	2,725.53	1,933.00
125	Selenium	2,319.60	1,159.80
128	Zinc	2,570.89	1,082.48
	Aluminum	8,795.15	3,595.38
	Total Toxic Organics (TTO)	1,333.77	-
	Oil & Grease*	38,660.00	23,196.00
	Total Suspended Solids	79,253.00	38,660.00
	pH	Within the range of 7.5 to 10.0 at all times.	

*Alternate monitoring limit - oil and grease may be substituted for TTO.

Table XII-10 (Continued)

PSES FOR THE EXTRUSION SUBCATEGORY

Degassing - Scrubber Liquor

Pollutant or Pollutant Property		Maximum for Any One Day	Maximum for Monthly Average
		mg/kkg (lb/billion lbs) of aluminum degassed	
118	Cadmium	0.00	0.00
119	Chromium	0.00	0.00
120	Copper	0.00	0.00
121	Cyanide	0.00	0.00
122	Lead	0.00	0.00
124	Nickel	0.00	0.00
125	Selenium	0.00	0.00
128	Zinc	0.00	0.00
	Aluminum	0.00	0.00
	Total Toxic Organics (TTO)	0.00	-
	Oil & Grease*	0.00	0.00
	Total Suspended Solids	0.00	0.00
	pH	Within the range of 7.5 to 10.0 at all times.	

*Alternate monitoring limit - oil and grease may be substituted for TTO.

Table XII-11

PSES FOR THE FORGING SUBCATEGORY

Forging - Core Waste Streams

	Pollutant or Pollutant Property	Maximum for Any One Day	Maximum for Monthly Average
		mg/kkg (lb/billion lbs) of aluminum forged	
118	Cadmium	2.50	1.17
119	Chromium	3.28	1.33
120	Copper	14.83	7.81
121	Cyanide	2.26	0.94
122	Lead	1.17	1.01
124	Nickel	11.01	7.81
125	Selenium	9.37	4.68
128	Zinc	10.38	4.37
	Aluminum	35.52	14.52
	Total Toxic Organics (TTO)	5.39	-
	Oil & Grease*	156.14	93.68
	Total Suspended Solids	320.09	156.14
	pH	Within the range of 7.5 to 10.0 at all times.	

Forging - Scrubber Liquor

	Pollutant or Pollutant Property	Maximum for Any One Day	Maximum for Monthly Average
		mg/kkg (lb/billion lbs) of aluminum forged	
118	Cadmium	30.18	14.15
119	Chromium	39.61	16.03
120	Copper	179.19	94.31
121	Cyanide	27.35	11.32
122	Lead	14.15	12.26
124	Nickel	132.98	94.31
125	Selenium	113.17	56.59
128	Zinc	125.43	52.81
	Aluminum	429.11	175.42
	Total Toxic Organics (TTO)	65.07	-
	Oil & Grease*	1,886.20	1,131.72
	Total Suspended Solids	3,866.71	1,886.20
	pH	Within the range of 7.5 to 10.0 at all times.	

*Alternate monitoring limit - oil and grease may be substituted for TTO.

Table XII-11 (Continued)

PSES FOR THE FORGING SUBCATEGORY

Solution Heat Treatment - Contact Cooling Water

	Pollutant or Pollutant Property	Maximum for Any One Day	Maximum for Monthly Average
	mg/kkg (lb/billion lbs) of aluminum quenched		
118	Cadmium	651.84	305.55
119	Chromium	855.54	346.29
120	Copper	3,870.30	2,037.00
121	Cyanide	590.73	244.44
122	Lead	305.55	264.81
124	Nickel	2,872.17	2,037.00
125	Selenium	2,444.40	1,222.20
128	Zinc	2,709.21	1,140.72
	Aluminum	9,268.35	3,788.82
	Total Toxic Organics (TTO)	1,405.53	-
	Oil & Grease*	40,740.00	24,444.00
	Total Suspended Solids	83,517.00	40,740.00
	pH	Within the range of 7.5 to 10.0 at all times.	

Cleaning or Etching - Bath

	Pollutant or Pollutant Property	Maximum for Any One Day	Maximum for Monthly Average
	mg/kkg (lb/billion lbs) of aluminum cleaned or etched		
118	Cadmium	0.00	0.00
119	Chromium	0.00	0.00
120	Copper	0.00	0.00
121	Cyanide	0.00	0.00
122	Lead	0.00	0.00
124	Nickel	0.00	0.00
125	Selenium	0.00	0.00
128	Zinc	0.00	0.00
	Aluminum	0.00	0.00
	Total Toxic Organics (TTO)	0.00	-
	Oil & Grease*	0.00	0.00
	Total Suspended Solids	0.00	0.00
	pH	Within the range of 7.5 to 10.0 at all times.	

*Alternate monitoring limit - oil and grease may be substituted for TTO.

Table XII-11 (Continued)

PSES FOR THE FORGING SUBCATEGORY

Cleaning or Etching - Rinse

	Pollutant or Pollutant Property	Maximum for Any One Day	Maximum for Monthly Average
	mg/kkg (lb/billion lbs) of aluminum cleaned or etched		
118	Cadmium	539.52	252.90
119	Chromium	708.12	286.62
120	Copper	3,203.40	1,686.00
121	Cyanide	488.94	202.32
122	Lead	252.90	219.18
124	Nickel	2,377.26	1,686.00
125	Selenium	2,023.20	1,011.60
128	Zinc	2,242.38	944.16
	Aluminum	7,671.30	3,135.96
	Total Toxic Organics (TTO)	1,163.34	-
	Oil & Grease*	33,720.00	20,232.00
	Total Suspended Solids	69,126.00	33,720.00
	pH	Within the range of 7.5 to 10.0 at all times.	

Cleaning or Etching - Scrubber Liquor

	Pollutant or Pollutant Property	Maximum for Any One Day	Maximum for Monthly Average
	mg/kkg (lb/billion lbs) of aluminum cleaned or etched		
118	Cadmium	618.56	289.95
119	Chromium	811.86	328.61
120	Copper	3,672.70	1,933.00
121	Cyanide	560.57	231.96
122	Lead	289.95	251.29
124	Nickel	2,725.53	1,933.00
125	Selenium	2,319.60	1,159.80
128	Zinc	2,570.89	1,082.48
	Aluminum	8,795.15	3,595.38
	Total Toxic Organics (TTO)	1,333.77	-
	Oil & Grease*	38,660.00	23,196.00
	Total Suspended Solids	79,253.00	38,660.00
	pH	Within the range of 7.5 to 10.0 at all times.	

*Alternate monitoring limit - oil and grease may be substituted for TTO.

Table XII-12

PSES FOR THE DRAWING WITH NEAT OILS SUBCATEGORY

Drawing With Neat Oils - Core Waste Streams

	Pollutant or Pollutant Property	Maximum for Any One Day	Maximum for Monthly Average
	mg/kkg (lb/billion lbs) of aluminum drawn with neat oils		
118	Cadmium	2.50	1.17
119	Chromium	3.28	1.33
120	Copper	14.83	7.81
121	Cyanide	2.26	0.94
122	Lead	1.17	1.01
124	Nickel	11.01	7.81
125	Selenium	9.37	4.68
128	Zinc	10.38	4.37
	Aluminum	35.52	14.52
	Total Toxic Organics (TTO)	5.39	-
	Oil & Grease*	156.14	93.68
	Total Suspended Solids	320.09	156.14
	pH	Within the range of 7.5 to 10.0 at all times.	

Continuous Rod Casting - Contact Cooling Water

	Pollutant or Pollutant Property	Maximum for Any One Day	Maximum for Monthly Average
	mg/kkg (lb/billion lbs) of aluminum cast by continuous methods		
118	Cadmium	33.34	15.63
119	Chromium	43.76	17.71
120	Copper	197.98	104.20
121	Cyanide	30.22	12.50
122	Lead	15.63	13.55
124	Nickel	146.92	104.20
125	Selenium	125.04	65.52
128	Zinc	138.59	58.35
	Aluminum	474.11	193.81
	Total Toxic Organics (TTO)	71.90	-
	Oil & Grease*	2,084.00	1,250.40
	Total Suspended Solids	4,272.20	2,084.00
	pH	Within the range of 7.5 to 10.0 at all times.	

*Alternate monitoring limit - oil and grease may be substituted for TTO.

Table XII-12 (Continued)

PSES FOR THE DRAWING WITH NEAT OILS SUBCATEGORY

Continuous Rod Casting - Spent Lubricant

	Pollutant or Pollutant Property	Maximum for Any One Day	Maximum for Monthly Average
	mg/kkg (lb/billion lbs) of aluminum cast by continuous methods		
118	Cadmium	0.59	0.28
119	Chromium	0.77	0.31
120	Copper	3.50	1.84
121	Cyanide	0.53	0.22
122	Lead	0.28	0.24
124	Nickel	2.60	1.84
125	Selenium	2.21	1.11
128	Zinc	2.45	1.03
	Aluminum	8.39	3.43
	Total Toxic Organics (TTO)	1.27	-
	Oil & Grease*	36.86	22.12
	Total Suspended Solids	75.56	36.86
	pH	Within the range of 7.5 to 10.0 at all times.	

Solution Heat Treatment - Contact Cooling Water

	Pollutant or Pollutant Property	Maximum for Any One Day	Maximum for Monthly Average
	mg/kkg (lb/billion lbs) of aluminum quenched		
118	Cadmium	651.84	305.55
119	Chromium	855.54	346.29
120	Copper	3,870.30	2,037.00
121	Cyanide	590.73	244.44
122	Lead	305.55	264.81
124	Nickel	2,872.17	2,037.00
125	Selenium	2,440.40	1,220.20
128	Zinc	2,709.21	1,140.72
	Aluminum	9,268.35	3,788.82
	Total Toxic Organics (TTO)	1,405.53	-
	Oil & Grease*	40,740.00	24,444.00
	Total Suspended Solids	83,517.00	40,740.00
	pH	Within the range of 7.5 to 10.0 at all times.	

*Alternate monitoring limit - oil and grease may be substituted for TTO.

Table XII-12 (Continued)

PSES FOR THE DRAWING WITH NEAT OILS SUBCATEGORY

Cleaning or Etching - Bath

	Pollutant or Pollutant Property	Maximum for Any One Day	Maximum for Monthly Average
	mg/kkg (lb/billion lbs) of aluminum cleaned or etched		
118	Cadmium	0.00	0.00
119	Chromium	0.00	0.00
120	Copper	0.00	0.00
121	Cyanide	0.00	0.00
122	Lead	0.00	0.00
124	Nickel	0.00	0.00
125	Selenium	0.00	0.00
128	Zinc	0.00	0.00
	Aluminum	0.00	0.00
	Total Toxic Organics (TTO)	0.00	-
	Oil & Grease*	0.00	0.00
	Total Suspended Solids	0.00	0.00
	pH	Within the range of 7.5 to 10.0 at all times.	

Cleaning or Etching - Rinse

	Pollutant or Pollutant Property	Maximum for Any One Day	Maximum for Monthly Average
	mg/kkg (lb/billion lbs) of aluminum cleaned or etched		
118	Cadmium	539.52	252.90
119	Chromium	708.12	286.62
120	Copper	3,203.40	1,686.00
121	Cyanide	488.94	202.32
122	Lead	252.90	219.18
124	Nickel	2,377.26	1,686.00
125	Selenium	2,023.20	1,011.60
128	Zinc	2,242.38	944.16
	Aluminum	7,671.30	3,135.96
	Total Toxic Organics (TTO)	1,163.34	-
	Oil & Grease*	33,720.00	20,232.00
	Total Suspended Solids	69,126.00	33,720.00
	pH	Within the range of 7.5 to 10.0 at all times.	

*Alternate monitoring limit - oil and grease may be substituted for TTO.

Table XII-12 (Continued)

PSES FOR THE DRAWING WITH NEAT OILS SUBCATEGORY

Cleaning or Etching - Scrubber Liquor

	Pollutant or Pollutant Property	Maximum for Any One Day	Maximum for Monthly Average
	mg/kkg (lb/billion lbs) of aluminum cleaned or etched		
118	Cadmium	618.56	289.95
119	Chromium	811.86	328.61
120	Copper	3,672.70	1,933.00
121	Cyanide	560.57	231.96
122	Lead	289.95	251.29
124	Nickel	2,725.53	1,933.00
125	Selenium	2,319.60	1,159.80
128	Zinc	2,570.89	1,082.48
	Aluminum	8,795.15	3,595.38
	Total Toxic Organics (TTO)	1,333.77	-
	Oil & Grease*	38,660.00	23,196.00
	Total Suspended Solids	79,253.00	38,660.00
	pH	Within the range of 7.5 to 10.0 at all times.	

*Alternate monitoring limit - oil and grease may be substituted for TTO.

Table XII-13

PSES FOR THE DRAWING WITH EMULSIONS OR SOAPS SUBCATEGORY

Drawing With Emulsions or Soaps - Core Waste Streams

Pollutant or Pollutant Property		Maximum for Any One Day	Maximum for Monthly Average
mg/kkg (lb/billion lbs) of aluminum drawn with emulsions or soaps			
118	Cadmium	135.78	th emulsions or soaps
118	Cadmium	135.78	63.65
119	Chromium	178.21	72.13
120	Copper	806.17	424.30
121	Cyanide	123.05	50.92
122	Lead	63.65	55.16
124	Nickel	598.26	424.30
128	Zinc	564.32	237.61
	Aluminum	1,930.57	789.20
	Total Toxic Organics (TTO)	292.77	-
	Oil & Grease*	8,486.00	5,091.60
	Total Suspended Solids	17,396.30	8,486.00
	pH	Within the range of 7.5 to 10.0 at all times.	

Continuous Rod Casting - Contact Cooling Water

Pollutant or Pollutant Property		Maximum for Any One Day	Maximum for Monthly Average
mg/kkg (lb/billion lbs) of aluminum cast by continuous methods			
118	Cadmium	33.34	15.63
119	Chromium	43.76	17.71
120	Copper	197.98	104.20
121	Cyanide	30.22	12.50
122	Lead	15.63	13.55
124	Nickel	146.92	104.20
128	Zinc	138.59	58.35
	Aluminum	474.11	193.81
	Total Toxic Organics (TTO)	71.90	-
	Oil & Grease*	2,084.00	1,250.40
	Total Suspended Solids	4,272.20	2,084.00
	pH	Within the range of 7.5 to 10.0 at all times.	

*Alternate monitoring limit - oil and grease may be substituted for TTO.

Table XII-13 (Continued)

PSES MASS LIMITATIONS FOR THE DRAWING WITH EMULSIONS OR SOAPS SUBCATEGORY

Continuous Rod Casting - Spent Lubricant

	Pollutant or Pollutant Property	Maximum for Any One Day	Maximum for Monthly Average
	mg/kkg (lb/billion lbs) of aluminum cast by continuous methods		
118	Cadmium	0.59	0.28
119	Chromium	0.77	0.31
120	Copper	3.50	1.84
121	Cyanide	0.53	0.22
122	Lead	0.28	0.24
124	Nickel	2.60	1.84
128	Zinc	2.45	1.03
	Aluminum	8.39	3.43
	Total Toxic Organics (TTO)	1.27	-
	Oil & Grease*	36.86	22.12
	Total Suspended Solids	75.56	36.86
	pH	Within the range of 7.5 to 10.0 at all times.	

Solution Heat Treatment - Contact Cooling Water

	Pollutant or Pollutant Property	Maximum for Any One Day	Maximum for Monthly Average
	mg/kkg (lb/billion lbs) of aluminum quenched		
118	Cadmium	651.84	305.55
119	Chromium	855.54	346.29
120	Copper	3,870.30	2,037.00
121	Cyanide	590.73	244.44
122	Lead	305.55	264.81
124	Nickel	2,872.17	2,037.00
128	Zinc	2,709.21	1,140.72
	Aluminum	9,268.35	3,788.82
	Total Toxic Organics (TTO)	1,405.53	-
	Oil & Grease*	40,740.00	24,444.00
	Total Suspended Solids	83,517.00	40,740.00
	pH	Within the range of 7.5 to 10.0 at all times.	

*Alternate monitoring limit - oil and grease may be substituted for TTO.

Table XII-13 (Continued)

PSES MASS LIMITATIONS FOR THE DRAWING WITH EMULSIONS OR SOAPS SUBCATEGORY

Cleaning or Etching - Bath

	Pollutant or Pollutant Property	Maximum for Any One Day	Maximum for Monthly Average
	mg/kkg (lb/billion lbs) of aluminum cleaned or etched		
118	Cadmium	0.00	0.00
119	Chromium	0.00	0.00
120	Copper	0.00	0.00
121	Cyanide	0.00	0.00
122	Lead	0.00	0.00
124	Nickel	0.00	0.00
128	Zinc	0.00	0.00
	Aluminum	0.00	0.00
	Total Toxic Organics (TTO)	0.00	-
	Oil & Grease*	0.00	0.00
	Total Suspended Solids	0.00	0.00
	pH	Within the range of 7.5 to 10.0 at all times.	

Cleaning or Etching - Rinse

	Pollutant or Pollutant Property	Maximum for Any One Day	Maximum for Monthly Average
	mg/kkg (lb/billion lbs) of aluminum cleaned or etched		
118	Cadmium	539.52	252.90
119	Chromium	708.12	286.62
120	Copper	3,203.40	1,686.00
121	Cyanide	488.94	202.32
122	Lead	252.9	219.18
124	Nickel	2,377.26	1,686.00
128	Zinc	2,242.38	944.16
	Aluminum	7,671.30	3,135.96
	Total Toxic Organics (TTO)	1,163.34	-
	Oil & Grease*	33,720.00	20,232.00
	Total Suspended Solids	69,126.00	33,720.00
	pH	Within the range of 7.5 to 10.0 at all times.	

*Alternate monitoring limit - oil and grease may be substituted for TTO.

Table XII-13 (Continued)

PSES MASS LIMITATIONS FOR THE DRAWING WITH EMULSIONS OR SOAPS SUBCATEGORY

Cleaning or Etching - Scrubber Liquor

Pollutant or Pollutant Property		Maximum for Any One Day	Maximum for Monthly Average
	mg/kkg (lb/billion lbs) of aluminum cleaned or etched		
118	Cadmium	618.56	289.95
119	Chromium	811.86	328.61
120	Copper	3,672.70	1,933.00
121	Cyanide	560.57	231.96
122	Lead	289.95	251.29
124	Nickel	2,725.53	1,933.00
128	Zinc	2,570.89	1,082.48
	Aluminum	8,795.15	3,595.38
	Total Toxic Organics (TTO)	1,333.77	-
	Oil & Grease*	38,660.00	23,196.00
	Total Suspended Solids	79,253.00	38,660.00
	pH	Within the range of 7.5 to 10.0 at all times.	

*Alternate monitoring limit - oil and grease may be substituted for TTO.

Table XII-14

PSNS FOR THE ROLLING WITH NEAT OILS SUBCATEGORY

Rolling With Neat Oils - Core Waste Streams Without An Annealing Furnace Scrubber

	Pollutant or Pollutant Property	Maximum for Any One Day	Maximum for Monthly Average
	mg/kkg (lb/billion lbs) of aluminum rolled with neat oils		
118	Cadmium	3.32	1.33
119	Chromium	6.13	2.49
120	Copper	21.22	10.11
121	Cyanide	3.32	1.33
122	Lead	1.66	1.49
124	Nickel	9.12	6.13
125	Selenium	0.50	0.17
128	Zinc	16.91	6.96
	Aluminum	50.24	20.56
	Total Toxic Organics (TTO)	11.44	-
	Oil & Grease*	165.80	165.80
	Total Suspended Solids	248.70	182.38
	pH	Within the range of 7.5 to 10.0 at all times.	

Rolling With Neat Oils - Core Waste Streams With An Annealing Furnace Scrubber

	Pollutant or Pollutant Property	Maximum for Any One Day	Maximum for Monthly Average
	mg/kkg (lb/billion lbs) of aluminum rolled with neat oils		
118	Cadmium	8.59	3.43
119	Chromium	15.88	6.44
120	Copper	54.95	26.19
121	Cyanide	8.59	3.43
122	Lead	4.29	3.86
124	Nickel	23.61	15.88
125	Selenium	1.29	0.43
128	Zinc	43.79	18.03
	Aluminum	130.08	53.23
	Total Toxic Organics (TTO)	29.62	-
	Oil & Grease*	429.30	429.30
	Total Suspended Solids	643.95	472.23
	pH	Within the range of 7.5 to 10.0 at all times.	

*Alternate monitoring limit - oil and grease may be substituted for TTO.

Table XII-14 (Continued)

PSNS FOR THE ROLLING WITH NEAT OILS SUBCATEGORY

Continuous Sheet Casting - Spent Lubricant

	Pollutant or Pollutant Property	Maximum for Any One Day	Maximum for Monthly Average
	mg/kkg (lb/billion lbs) of aluminum cast by continuous methods		
118	Cadmium	0.37	0.15
119	Chromium	0.68	0.28
120	Copper	2.36	1.12
121	Cyanide	0.37	0.15
122	Lead	0.18	0.17
124	Nickel	1.01	0.68
125	Selenium	0.06	0.02
128	Zinc	1.88	0.77
	Aluminum	5.58	2.29
	Total Toxic Organics (TTO)	1.27	-
	Oil & Grease*	18.43	18.43
	Total Suspended Solids	27.65	20.27
	pH	Within the range of 7.5 to 10.0 at all times.	

Solution Heat Treatment - Contact Cooling Water

	Pollutant or Pollutant Property	Maximum for Any One Day	Maximum for Monthly Average
	mg/kkg (lb/billion lbs) of aluminum quenched		
118	Cadmium	407.40	162.96
119	Chromium	753.69	305.55
120	Copper	2,607.36	1,242.57
121	Cyanide	407.40	162.96
122	Lead	203.70	183.33
124	Nickel	1,120.35	753.69
125	Selenium	61.11	20.37
128	Zinc	2,077.74	855.54
	Aluminum	6,172.11	2,525.88
	Total Toxic Organics (TTO)	1,405.53	-
	Oil & Grease*	20,370.00	20,370.00
	Total Suspended Solids	30,555.00	22,407.00
	pH	Within the range of 7.5 to 10.0 at all times.	

*Alternate monitoring limit - oil and grease may be substituted for TTO.

Table XII-14 (Continued)

PSNS FOR THE ROLLING WITH NEAT OILS SUBCATEGORY

Cleaning or Etching - Bath

	Pollutant or Pollutant Property	Maximum for Any One Day	Maximum for Monthly Average
	mg/kkg (lb/billion lbs) of aluminum cleaned or etched		
118	Cadmium	0.00	0.00
119	Chromium	0.00	0.00
120	Copper	0.00	0.00
121	Cyanide	0.00	0.00
122	Lead	0.00	0.00
124	Nickel	0.00	0.00
125	Selenium	0.00	0.00
128	Zinc	0.00	0.00
	Aluminum	0.00	0.00
	Total Toxic Organics (TTO)	0.00	-
	Oil & Grease*	0.00	0.00
	Total Suspended Solids	0.00	0.00
	pH	Within the range of 7.5 to 10.0 at all times.	

Cleaning or Etching - Rinse

	Pollutant or Pollutant Property	Maximum for Any One Day	Maximum for Monthly Average
	mg/kkg (lb/billion lbs) of aluminum cleaned or etched		
118	Cadmium	337.20	134.88
119	Chromium	623.82	252.90
120	Copper	2,158.08	1,028.46
121	Cyanide	337.20	134.88
122	Lead	168.60	151.74
124	Nickel	927.30	623.82
125	Selenium	50.58	16.86
128	Zinc	1,719.72	708.12
	Aluminum	5,108.58	2,090.64
	Total Toxic Organics (TTO)	1,163.64	-
	Oil & Grease*	16,860.00	16,860.00
	Total Suspended Solids	25,290.00	18,546.00
	pH	Within the range of 7.5 to 10.0 at all times.	

*Alternate monitoring limit - oil and grease may be substituted for TTO.

Table XII-14 (Continued)

PSNS FOR THE ROLLING WITH NEAT OILS SUBCATEGORY

Cleaning or Etching - Scrubber Liquor

	Pollutant or Pollutant Property	Maximum for Any One Day	Maximum for Monthly Average
	mg/kkg (lb/billion lbs) of aluminum cleaned or etched		
118	Cadmium	386.60	154.64
119	Chromium	715.21	289.95
120	Copper	2,474.24	1,179.13
121	Cyanide	386.60	154.64
122	Lead	193.30	173.97
124	Nickel	1,063.15	715.21
125	Selenium	57.99	19.33
128	Zinc	1,971.66	811.86
	Aluminum	5,856.99	2,396.92
	Total Toxic Organics (TTO)	1,333.77	-
	Oil & Grease*	19,330.00	19,330.00
	Total Suspended Solids	28,995.00	21,263.00
	pH	Within the range of 7.5 to 10.0 at all times.	

*Alternate monitoring limit - oil and grease may be substituted for TTO.

Table XII-15

PSNS FOR THE ROLLING WITH EMULSIONS SUBCATEGORY

Rolling With Emulsions - Core Waste Streams

	Pollutant or Pollutant Property	Maximum for Any One Day	Maximum for Monthly Average
	mg/kkg (lb/billion lbs) of aluminum rolled with emulsions		
118	Cadmium	18.22	7.29
119	Chromium	33.70	13.66
120	Copper	116.60	55.56
121	Cyanide	18.22	7.29
122	Lead	9.11	8.20
124	Nickel	50.10	33.70
125	Selenium	2.73	0.91
128	Zinc	92.91	38.26
	Aluminum	276.00	112.95
	Total Toxic Organics (TTO)	62.85	-
	Oil & Grease*	910.90	910.90
	Total Suspended Solids	1,366.35	1,001.99
	pH	Within the range of 7.5 to 10.0 at all times.	

Direct Chill Casting - Contact Cooling Water

	Pollutant or Pollutant Property	Maximum for Any One Day	Maximum for Monthly Average
	mg/kkg (lb/billion lbs) of aluminum cast by direct chill methods		
118	Cadmium	399.80	159.92
119	Chromium	739.63	299.85
120	Copper	2,558.72	1,219.39
121	Cyanide	399.80	159.92
122	Lead	199.90	179.91
124	Nickel	1,099.45	739.63
125	Selenium	59.97	19.99
128	Zinc	2,038.98	839.58
	Aluminum	6,056.97	2,478.76
	Total Toxic Organics (TTO)	1,379.31	-
	Oil & Grease*	19,990.00	19,990.00
	Total Suspended Solids	29,985.00	21,989.00
	pH	Within the range of 7.5 to 10.0 at all times.	

*Alternate monitoring limit - oil and grease may be substituted for TTO.

Table XII-15 (Continued)

PSNS FOR THE ROLLING WITH EMULSIONS SUBCATEGORY

Solution Heat Treatment - Contact Cooling Water

	Pollutant or Pollutant Property	Maximum for Any One Day	Maximum for Monthly Average
		mg/kkg (lb/billion lbs) of aluminum quenched	
118	Cadmium	407.40	162.96
119	Chromium	753.69	305.55
120	Copper	2,607.36	1,242.57
121	Cyanide	407.40	162.96
122	Lead	203.70	183.33
124	Nickel	1,120.35	753.69
125	Selenium	61.11	20.37
128	Zinc	2,077.74	855.54
	Aluminum	6,172.11	2,525.88
	Total Toxic Organics (TTO)	1,405.53	-
	Oil & Grease*	20,370.00	20,370.00
	Total Suspended Solids	30,555.00	22,407.00
	pH	Within the range of 7.5 to 10.0 at all times.	

Cleaning or Etching - Bath

	Pollutant or Pollutant Property	Maximum for Any One Day	Maximum for Monthly Average
		mg/kkg (lb/billion lbs) of aluminum cleaned or etched	
118	Cadmium	0.00	0.00
119	Chromium	0.00	0.00
120	Copper	0.00	0.00
121	Cyanide	0.00	0.00
122	Lead	0.00	0.00
124	Nickel	0.00	0.00
125	Selenium	0.00	0.00
128	Zinc	0.00	0.00
	Aluminum	0.00	0.00
	Total Toxic Organics (TTO)	0.00	-
	Oil & Grease*	0.00	0.00
	Total Suspended Solids	0.00	0.00
	pH	Within the range of 7.5 to 10.0 at all times.	

*Alternate monitoring limit - oil and grease may be substituted for TTO.

Table XII-15 (Continued)

PSNS FOR THE ROLLING WITH EMULSIONS SUBCATEGORY

Cleaning or Etching - Rinse

	Pollutant or Pollutant Property	Maximum for Any One Day	Maximum for Monthly Average
	mg/kkg (lb/billion lbs) of aluminum cleaned or etched		
118	Cadmium	337.20	134.88
119	Chromium	623.82	252.90
120	Copper	2,158.08	1,028.46
121	Cyanide	337.20	134.88
122	Lead	168.60	151.74
124	Nickel	927.30	623.82
125	Selenium	50.58	16.86
128	Zinc	1,719.72	708.12
	Aluminum	5,108.58	2,090.64
	Total Toxic Organics (TTO)	1,163.64	-
	Oil & Grease*	16,860.00	16,860.00
	Total Suspended Solids	25,290.00	18,546.00
	pH	Within the range of 7.5 to 10.0 at all times.	

Cleaning or Etching - Scrubber Liquor

	Pollutant or Pollutant Property	Maximum for Any One Day	Maximum for Monthly Average
	mg/kkg (lb/billion lbs) of aluminum cleaned or etched		
118	Cadmium	386.60	154.64
119	Chromium	715.21	289.95
120	Copper	2,474.24	1,179.13
121	Cyanide	386.60	154.64
122	Lead	193.30	173.97
124	Nickel	1,063.15	715.21
125	Selenium	57.99	19.33
128	Zinc	1,971.66	811.86
	Aluminum	5,856.99	2,396.92
	Total Toxic Organics (TTO)	1,333.77	-
	Oil & Grease*	19,330.00	19,330.00
	Total Suspended Solids	28,995.00	21,263.00
	pH	Within the range of 7.5 to 10.0 at all times.	

*Alternate monitoring limit - oil and grease may be substituted for TTO.

Table XII-16

PSNS FOR THE EXTRUSION SUBCATEGORY

Extrusion - Core Waste Streams

Pollutant or Pollutant Property		Maximum for Any One Day	Maximum for Monthly Average
		mg/kkg (lb/billion lbs) of aluminum extruded	
118	Cadmium	59.62	23.85
119	Chromium	110.30	44.72
120	Copper	381.57	181.84
121	Cyanide	59.62	23.85
122	Lead	29.81	26.83
124	Nickel	163.96	110.30
125	Selenium	8.94	2.98
128	Zinc	304.06	125.20
	Aluminum	903.24	369.64
	Total Toxic Organics (TTO)	205.69	-
	Oil & Grease*	2,981.00	2,981.00
	Total Suspended Solids	4,471.50	3,279.10
	pH	Within the range of 7.5 to 10.0 at all times.	

Direct Chill Casting - Contact Cooling Water

Pollutant or Pollutant Property		Maximum for Any One Day	Maximum for Monthly Average
		mg/kkg (lb/billion lbs) of aluminum cast by direct chill methods	
118	Cadmium	399.80	159.92
119	Chromium	739.63	299.85
120	Copper	2,558.72	1,219.39
121	Cyanide	399.80	159.92
122	Lead	199.90	179.91
124	Nickel	1,099.45	739.63
125	Selenium	59.97	19.99
128	Zinc	2,038.98	839.58
	Aluminum	6,056.97	2,478.76
	Total Toxic Organics (TTO)	1,379.31	-
	Oil & Grease*	19,990.00	19,990.00
	Total Suspended Solids	29,985.00	21,989.00
	pH	Within the range of 7.5 to 10.0 at all times.	

*Alternate monitoring limit - oil and grease may be substituted for TTO.

Table XII-16 (Continued)

PSNS FOR THE EXTRUSION SUBCATEGORY

Solution and Press Heat Treatment - Contact Cooling Water

Pollutant or Pollutant Property		Maximum for Any One Day	Maximum for Monthly Average
		mg/kkg (lb/billion lbs) of aluminum quenched	
118	Cadmium	407.40	162.96
119	Chromium	753.69	305.55
120	Copper	2,607.36	1,242.57
121	Cyanide	407.40	162.96
122	Lead	203.70	183.33
124	Nickel	1,120.35	753.69
125	Selenium	61.11	20.37
128	Zinc	2,077.74	855.54
	Aluminum	6,172.11	2,525.88
	Total Toxic Organics (TTO)	1,405.53	-
	Oil & Grease*	20,370.00	20,370.00
	Total Suspended Solids	30,555.00	22,407.00
	pH	Within the range of 7.5 to 10.0 at all times.	

Cleaning or Etching - Bath

Pollutant or Pollutant Property		Maximum for Any One Day	Maximum for Monthly Average
		mg/kkg (lb/billion lbs) of aluminum cleaned or etched	
118	Cadmium	0.00	0.00
119	Chromium	0.00	0.00
120	Copper	0.00	0.00
121	Cyanide	0.00	0.00
122	Lead	0.00	0.00
124	Nickel	0.00	0.00
125	Selenium	0.00	0.00
128	Zinc	0.00	0.00
	Aluminum	0.00	0.00
	Total Toxic Organics (TTO)	0.00	-
	Oil & Grease*	0.00	0.00
	Total Suspended Solids	0.00	0.00
	pH	Within the range of 7.5 to 10.0 at all times.	

*Alternate monitoring limit - oil and grease may be substituted for TTO.

Table XII-16 (Continued)

PSNS FOR THE EXTRUSION SUBCATEGORY

Cleaning or Etching - Rinse

	Pollutant or Pollutant Property	Maximum for Any One Day	Maximum for Monthly Average
	mg/kkg (lb/billion lbs) of aluminum cleaned or etched		
118	Cadmium	337.20	134.88
119	Chromium	623.82	252.90
120	Copper	2,158.08	1,028.46
121	Cyanide	337.20	134.88
122	Lead	168.60	151.74
124	Nickel	927.30	623.82
125	Selenium	50.58	16.86
128	Zinc	1,719.72	708.12
	Aluminum	5,108.58	2,090.64
	Total Toxic Organics (TTO)	1,163.64	-
	Oil & Grease*	16,860.00	16,860.00
	Total Suspended Solids	25,290.00	18,546.00
	pH	Within the range of 7.5 to 10.0 at all times.	

Cleaning or Etching - Scrubber Liquor

	Pollutant or Pollutant Property	Maximum for Any One Day	Maximum for Monthly Average
	mg/kkg (lb/billion lbs) of aluminum cleaned or etched		
118	Cadmium	386.60	154.64
119	Chromium	715.21	289.95
120	Copper	2,474.24	1,179.13
121	Cyanide	386.60	154.64
122	Lead	193.30	173.97
124	Nickel	1,063.15	715.21
125	Selenium	57.99	19.33
128	Zinc	1,971.66	811.86
	Aluminum	5,856.99	2,396.92
	Total Toxic Organics (TTO)	1,333.77	-
	Oil & Grease*	19,330.00	19,330.00
	Total Suspended Solids	28,995.00	21,263.00
	pH	Within the range of 7.5 to 10.0 at all times.	

*Alternate monitoring limit - oil and grease may be substituted for TTO.

Table XII-16 (Continued)

PSNS FOR THE EXTRUSION SUBCATEGORY

Degassing - Scrubber Liquor

Pollutant or Pollutant Property		Maximum for Any One Day	Maximum for Monthly Average
		mg/kkg (lb/billion lbs) of aluminum degassed	
118	Cadmium	0.00	0.00
119	Chromium	0.00	0.00
120	Copper	0.00	0.00
121	Cyanide	0.00	0.00
122	Lead	0.00	0.00
124	Nickel	0.00	0.00
125	Selenium	0.00	0.00
128	Zinc	0.00	0.00
	Aluminum	0.00	0.00
	Total Toxic Organics (TTO)	0.00	-
	Oil & Grease*	0.00	0.00
	Total Suspended Solids	0.00	0.00
	pH	Within the range of 7.5 to 10.0 at all times.	

*Alternate monitoring limit - oil and grease may be substituted for TTO.

Table XII-17

PSNS FOR THE FORGING SUBCATEGORY

Forging - Core Waste Streams

Pollutant or Pollutant Property		Maximum for Any One Day	Maximum for Monthly Average
		mg/kkg (lb/billion lbs) of aluminum forged	
118	Cadmium	1.56	0.62
119	Chromium	2.89	1.17
120	Copper	9.99	4.76
121	Cyanide	1.56	0.62
122	Lead	0.78	0.70
124	Nickel	4.29	2.89
125	Selenium	0.23	0.08
128	Zinc	7.96	3.28
	Aluminum	23.66	9.68
	Total Toxic Organics (TTO)	5.39	-
	Oil & Grease*	78.07	78.07
	Total Suspended Solids	117.11	85.88
	pH	Within the range of 7.5 to 10.0 at all times.	

Forging - Scrubber Liquor

Pollutant or Pollutant Property		Maximum for Any One Day	Maximum for Monthly Average
		mg/kkg (lb/billion lbs) of aluminum forged	
118	Cadmium	18.86	7.54
119	Chromium	34.89	14.15
120	Copper	120.72	57.53
121	Cyanide	18.86	7.54
122	Lead	9.43	8.49
124	Nickel	51.87	34.89
125	Selenium	2.83	0.94
128	Zinc	96.20	39.61
	Aluminum	285.76	116.94
	Total Toxic Organics (TTO)	65.07	-
	Oil & Grease*	943.10	943.10
	Total Suspended Solids	1,414.65	1,037.41
	pH	Within the range of 7.5 to 10.0 at all times.	

*Alternate monitoring limit - oil and grease may be substituted for TTO.

Table XII-17 (Continued)

PSNS FOR THE FORGING SUBCATEGORY

Solution Heat Treatment - Contact Cooling Water

	Pollutant or Pollutant Property	Maximum for Any One Day	Maximum for Monthly Average
	mg/kkg (lb/billion lbs) of aluminum quenched		
118	Cadmium	407.40	162.96
119	Chromium	753.69	305.55
120	Copper	2,607.36	1,242.57
121	Cyanide	407.40	162.96
122	Lead	203.70	183.33
124	Nickel	1,120.35	753.69
125	Selenium	61.11	20.37
128	Zinc	2,077.74	855.54
	Aluminum	6,172.11	2,525.88
	Total Toxic Organics (TTO)	1,405.53	-
	Oil & Grease*	20,370.00	20,370.00
	Total Suspended Solids	30,555.00	22,407.00
	pH	Within the range of 7.5 to 10.0 at all times.	

Cleaning or Etching - Bath

	Pollutant or Pollutant Property	Maximum for Any One Day	Maximum for Monthly Average
	mg/kkg (lb/billion lbs) of aluminum cleaned or etched		
118	Cadmium	0.00	0.00
119	Chromium	0.00	0.00
120	Copper	0.00	0.00
121	Cyanide	0.00	0.00
122	Lead	0.00	0.00
124	Nickel	0.00	0.00
125	Selenium	0.00	0.00
128	Zinc	0.00	0.00
	Aluminum	0.00	0.00
	Total Toxic Organics (TTO)	0.00	-
	Oil & Grease*	0.00	0.00
	Total Suspended Solids	0.00	0.00
	pH	Within the range of 7.5 to 10.0 at all times.	

*Alternate monitoring limit - oil and grease may be substituted for TTO.

Table XII-17 (Continued)

PSNS FOR THE FORGING SUBCATEGORY

Cleaning or Etching - Rinse

	Pollutant or Pollutant Property	Maximum for Any One Day	Maximum for Monthly Average
	mg/kkg (lb/billion lbs) of aluminum cleaned or etched		
118	Cadmium	337.20	134.88
119	Chromium	623.82	252.90
120	Copper	2,158.08	1,028.46
121	Cyanide	337.20	134.88
122	Lead	168.60	151.74
124	Nickel	927.30	623.82
125	Selenium	50.58	16.86
128	Zinc	1,719.72	708.12
	Aluminum	5,108.58	2,090.64
	Total Toxic Organics (TTO)	1,163.64	-
	Oil & Grease*	16,860.00	16,860.00
	Total Suspended Solids	25,290.00	18,546.00
	pH	Within the range of 7.5 to 10.0 at all times.	

Cleaning or Etching - Scrubber Liquor

	Pollutant or Pollutant Property	Maximum for Any One Day	Maximum for Monthly Average
	mg/kkg (lb/billion lbs) of aluminum cleaned or etched		
118	Cadmium	386.60	154.64
119	Chromium	715.21	289.95
120	Copper	2,474.24	1,179.13
121	Cyanide	386.60	154.64
122	Lead	193.30	173.97
124	Nickel	1,063.15	715.21
125	Selenium	57.99	19.33
128	Zinc	1,971.66	811.86
	Aluminum	5,856.99	2,396.92
	Total Toxic Organics (TTO)	1,333.77	-
	Oil & Grease*	19,330.00	19,330.00
	Total Suspended Solids	28,995.00	21,263.00
	pH	Within the range of 7.5 to 10.0 at all times.	

*Alternate monitoring limit - oil and grease may be substituted for TTO.

Table XII-18

PSNS FOR THE DRAWING WITH NEAT OILS SUBCATEGORY

Drawing With Neat Oils - Core Waste Streams

	Pollutant or Pollutant Property	Maximum for Any One Day	Maximum for Monthly Average
	mg/kkg (lb/billion lbs) of aluminum drawn with neat oils		
118	Cadmium	1.56	0.62
119	Chromium	2.89	1.17
120	Copper	9.99	4.76
121	Cyanide	1.56	0.62
122	Lead	0.78	0.70
124	Nickel	4.29	2.89
125	Selenium	0.23	0.08
128	Zinc	7.96	3.28
	Aluminum	23.66	9.68
	Total Toxic Organics (TTO)	5.39	-
	Oil & Grease*	78.07	78.07
	Total Suspended Solids	117.11	85.88
	pH	Within the range of 7.5 to 10.0 at all times.	

Continuous Rod Casting - Contact Cooling Water

	Pollutant or Pollutant Property	Maximum for Any One Day	Maximum for Monthly Average
	mg/kkg (lb/billion lbs) of aluminum cast by continuous methods		
118	Cadmium	20.84	8.34
119	Chromium	38.55	15.63
120	Copper	133.38	63.56
121	Cyanide	20.84	8.34
122	Lead	10.42	9.38
124	Nickel	57.31	38.55
125	Selenium	3.13	1.04
128	Zinc	106.28	43.76
	Aluminum	315.73	129.21
	Total Toxic Organics (TTO)	71.90	-
	Oil & Grease*	1,042.00	1,042.00
	Total Suspended Solids	1,563.00	1,146.20
	pH	Within the range of 7.5 to 10.0 at all times.	

*Alternate monitoring limit - oil and grease may be substituted for TTO.

Table XII-18 (Continued)

PSNS FOR THE DRAWING WITH NEAT OILS SUBCATEGORY

Continuous Rod Casting - Spent Lubricant

	Pollutant or Pollutant Property	Maximum for Any One Day	Maximum for Monthly Average
	mg/kkg (lb/billion lbs) of aluminum cast by continuous methods		
118	Cadmium	0.37	0.15
119	Chromium	0.68	0.28
120	Copper	2.36	1.12
121	Cyanide	0.37	0.15
122	Lead	0.18	0.17
124	Nickel	1.01	0.68
125	Selenium	0.06	0.02
128	Zinc	1.88	0.77
	Aluminum	5.58	2.29
	Total Toxic Organics (TTO)	1.27	-
	Oil & Grease*	18.43	18.43
	Total Suspended Solids	27.65	20.27
	pH	Within the range of 7.5 to 10.0 at all times.	

Solution Heat Treatment - Contact Cooling Water

	Pollutant or Pollutant Property	Maximum for Any One Day	Maximum for Monthly Average
	mg/kkg (lb/billion lbs) of aluminum quenched		
118	Cadmium	407.40	162.96
119	Chromium	753.69	305.55
120	Copper	2,607.36	1,242.57
121	Cyanide	407.40	162.96
122	Lead	203.70	183.33
124	Nickel	1,120.35	753.69
125	Selenium	61.11	20.37
128	Zinc	2,077.74	855.54
	Aluminum	6,172.11	2,525.88
	Total Toxic Organics (TTO)	1,405.53	-
	Oil & Grease*	20,370.00	20,370.00
	Total Suspended Solids	30,555.00	22,407.00
	pH	Within the range of 7.5 to 10.0 at all times.	

*Alternate monitoring limit - oil and grease may be substituted for TTO.

Table XII-18 (Continued)

PSNS FOR THE DRAWING WITH NEAT OILS SUBCATEGORY

Cleaning or Etching - Bath

	Pollutant or Pollutant Property	Maximum for Any One Day	Maximum for Monthly Average
	mg/kkg (lb/billion lbs) of aluminum cleaned or etched		
118	Cadmium	0.00	0.00
119	Chromium	0.00	0.00
120	Copper	0.00	0.00
121	Cyanide	0.00	0.00
122	Lead	0.00	0.00
124	Nickel	0.00	0.00
125	Selenium	0.00	0.00
128	Zinc	0.00	0.00
	Aluminum	0.00	0.00
	Total Toxic Organics (TTO)	0.00	-
	Oil & Grease*	0.00	0.00
	Total Suspended Solids	0.00	0.00
	pH	Within the range of 7.5 to 10.0 at all times.	

Cleaning or Etching - Rinse

	Pollutant or Pollutant Property	Maximum for Any One Day	Maximum for Monthly Average
	mg/kkg (lb/billion lbs) of aluminum cleaned or etched		
118	Cadmium	337.20	134.88
119	Chromium	623.82	252.90
120	Copper	2,158.08	1,028.46
121	Cyanide	337.20	134.88
122	Lead	168.60	151.74
124	Nickel	927.30	623.82
125	Selenium	50.58	16.86
128	Zinc	1,719.72	708.12
	Aluminum	5,108.58	2,090.64
	Total Toxic Organics (TTO)	1,163.64	-
	Oil & Grease*	16,860.00	16,860.00
	Total Suspended Solids	25,290.00	18,546.00
	pH	Within the range of 7.5 to 10.0 at all times.	

*Alternate monitoring limit - oil and grease may be substituted for TTO.

Table XII-18 (Continued)

PSNS FOR THE DRAWING WITH NEAT OILS SUBCATEGORY

Cleaning or Etching - Scrubber Liquor

	Pollutant or Pollutant Property	Maximum for Any One Day	Maximum for Monthly Average
	mg/kkg (lb/billion lbs) of aluminum cleaned or etched		
118	Cadmium	386.60	154.64
119	Chromium	715.21	289.95
120	Copper	2,474.24	1,179.13
121	Cyanide	386.60	154.64
122	Lead	193.30	173.97
124	Nickel	1,063.15	715.21
125	Selenium	57.99	19.33
128	Zinc	1,971.66	811.86
	Aluminum	5,856.99	2,396.92
	Total Toxic Organics (TTO)	1,333.77	-
	Oil & Grease*	19,330.00	19,330.00
	Total Suspended Solids	28,995.00	21,263.00
	pH	Within the range of 7.5 to 10.0 at all times.	

*Alternate monitoring limit - oil and grease may be substituted for TTO.

Table XII-19

PSNS FOR THE DRAWING WITH EMULSIONS OR SOAPS SUBCATEGORY

Drawing With Emulsions or Soaps - Core Waste Streams

	Pollutant or Pollutant Property	Maximum for Any One Day	Maximum for Monthly Average
	mg/kkg (lb/billion lbs) of aluminum drawn with emulsions or soaps		
118	Cadmium	84.86	33.94
119	Chromium	156.99	63.65
120	Copper	543.10	258.82
121	Cyanide	84.86	33.94
122	Lead	42.43	38.19
124	Nickel	233.37	156.99
125	Selenium	12.73	4.24
128	Zinc	432.79	178.21
	Aluminum	1,285.63	526.13
	Total Toxic Organics (TTO)	292.77	-
	Oil & Grease*	4,243.00	4,243.00
	Total Suspended Solids	6,364.50	4,667.30
	pH	Within the range of 7.5 to 10.0 at all times.	

Continuous Rod Casting - Contact Cooling Water

	Pollutant or Pollutant Property	Maximum for Any One Day	Maximum for Monthly Average
	mg/kkg (lb/billion lbs) of aluminum cast by continuous methods		
118	Cadmium	20.84	8.34
119	Chromium	38.55	15.63
120	Copper	133.38	63.56
121	Cyanide	20.84	8.34
122	Lead	10.42	9.38
124	Nickel	57.31	38.55
125	Selenium	3.13	1.04
128	Zinc	106.28	43.76
	Aluminum	315.73	129.21
	Total Toxic Organics (TTO)	71.90	-
	Oil & Grease*	1,042.00	1,042.00
	Total Suspended Solids	1,563.00	1,146.20
	pH	Within the range of 7.5 to 10.0 at all times.	

*Alternate monitoring limit - oil and grease may be substituted for TTO.

Table XII-19 (Continued)

PSNS FOR THE DRAWING WITH EMULSIONS OR SOAPS SUBCATEGORY

Continuous Rod Casting - Spent Lubricant

Pollutant or Pollutant Property		Maximum for Any One Day	Maximum for Monthly Average
	mg/kkg (lb/billion lbs) of aluminum cast by continuous methods		
118	Cadmium	0.37	0.15
119	Chromium	0.68	0.28
120	Copper	2.36	1.12
121	Cyanide	0.37	0.15
122	Lead	0.18	0.17
124	Nickel	1.01	0.68
125	Selenium	0.06	0.02
128	Zinc	1.88	0.77
	Aluminum	5.58	2.29
	Total Toxic Organics (TTO)	1.27	-
	Oil & Grease*	18.43	18.43
	Total Suspended Solids	27.65	20.27
	pH	Within the range of 7.5 to 10.0 at all times.	

Solution Heat Treatment - Contact Cooling Water

Pollutant or Pollutant Property		Maximum for Any One Day	Maximum for Monthly Average
	mg/kkg (lb/billion lbs) of aluminum quenched		
118	Cadmium	407.40	162.96
119	Chromium	753.69	305.55
120	Copper	2,607.36	1,242.57
121	Cyanide	407.40	162.96
122	Lead	203.70	183.33
124	Nickel	1,120.35	753.69
125	Selenium	61.11	20.37
128	Zinc	2,077.74	855.54
	Aluminum	6,172.11	2,525.88
	Total Toxic Organics (TTO)	1,405.53	-
	Oil & Grease*	20,370.00	20,370.00
	Total Suspended Solids	30,555.00	22,407.00
	pH	Within the range of 7.5 to 10.0 at all times.	

*Alternate monitoring limit - oil and grease may be substituted for TTO.

Table XII-19 (Continued)

PSNS FOR THE DRAWING WITH EMULSIONS OR SOAPS SUBCATEGORY

Cleaning or Etching - Bath

	Pollutant or Pollutant Property	Maximum for Any One Day	Maximum for Monthly Average
	mg/kkg (lb/billion lbs) of aluminum cleaned or etched		
118	Cadmium	0.00	0.00
119	Chromium	0.00	0.00
120	Copper	0.00	0.00
121	Cyanide	0.00	0.00
122	Lead	0.00	0.00
124	Nickel	0.00	0.00
125	Selenium	0.00	0.00
128	Zinc	0.00	0.00
	Aluminum	0.00	0.00
	Total Toxic Organics (TTO)	0.00	-
	Oil & Grease*	0.00	0.00
	Total Suspended Solids	0.00	0.00
	pH	Within the range of 7.5 to 10.0 at all times.	

Cleaning or Etching - Rinse

	Pollutant or Pollutant Property	Maximum for Any One Day	Maximum for Monthly Average
	mg/kkg (lb/billion lbs) of aluminum cleaned or etched		
118	Cadmium	337.20	134.88
119	Chromium	623.82	252.90
120	Copper	2,158.08	1,028.46
121	Cyanide	337.20	134.88
122	Lead	168.60	151.74
124	Nickel	927.30	623.82
125	Selenium	50.58	16.86
128	Zinc	1,719.72	708.12
	Aluminum	5,108.58	2,090.64
	Total Toxic Organics (TTO)	1,163.64	-
	Oil & Grease*	16,860.00	16,860.00
	Total Suspended Solids	25,290.00	18,546.00
	pH	Within the range of 7.5 to 10.0 at all times.	

*Alternate monitoring limit - oil and grease may be substituted for TTO.

Table XII-19 (Continued)

PSNS FOR THE DRAWING WITH EMULSIONS OR SOAPS SUBCATEGORY

Cleaning or Etching - Scrubber Liquor

Pollutant or Pollutant Property		Maximum for Any One Day	Maximum for Monthly Average
	mg/kkg (lb/billion lbs) of aluminum cleaned or etched		
118	Cadmium	386.60	154.64
119	Chromium	715.21	289.95
120	Copper	2,474.24	1,179.13
121	Cyanide	386.60	154.64
122	Lead	193.30	173.97
124	Nickel	1,063.15	715.21
125	Selenium	57.99	19.33
128	Zinc	1,971.66	811.86
	Aluminum	5,856.99	2,396.92
	Total Toxic Organics (TTO)	1,333.77	-
	Oil & Grease*	19,330.00	19,330.00
	Total Suspended Solids	28,995.00	21,263.00
	pH	Within the range of 7.5 to 10.0 at all times.	

*Alternate monitoring limit - oil and grease may be substituted for TTO.

SECTION XIII

BEST CONVENTIONAL POLLUTANT CONTROL TECHNOLOGY

The 1977 amendments to the Clean Water Act added Section 301(b)(2)(E), establishing "best conventional pollutant control technology" (BCT) for discharge of conventional pollutants from existing industrial point sources. Biological oxygen-demanding pollutants (BOD_5), total suspended solids (TSS), fecal coliform, oil and grease (O&G), and pH are considered by EPA to be conventional pollutants (see 44 FR 50732).

BCT is not an additional limitation but replaces BAT for the control of conventional pollutants. In addition to other factors specified in Section 304(b)(4)(B), the Act requires that BCT limitations be assessed in light of a two part "cost-reasonableness" test (American Paper Institute v. EPA, 660 F.2d 954 (4th Cir. 1981)). The first test compares the cost for private industry to reduce its conventional pollutants with the costs to publicly owned treatment works for similar levels of reduction in their discharge of these pollutants. The second test examines the cost-effectiveness of additional industrial treatment beyond BPT. EPA must find that limitations are "reasonable" under both tests before establishing them as BCT. In no case may BCT be less stringent than BPT.

On October 29, 1982, the Agency proposed a revised BCT methodology. EPA is deferring proposal of BCT limitations for the aluminum forming category until the revised methodology can be applied to the technologies available for the control of conventional pollutants in the aluminum forming category.

SECTION XIV

ACKNOWLEDGEMENT

The initial drafts of this document were prepared by Sverdrup & Parcel and Associates under Contract No. 68-01-4408. The document has been checked and revised at the specific direction of EPA personnel by Radian Corporation under Contract No. 68-01-6529.

The field sampling programs were conducted under the leadership of Garry Aronberg of Sverdrup & Parcel. Preparation and writing of the initial drafts of this document were accomplished by Donald Washington, Project Manager, Garry Aronberg, Claudia O'Leary, Anthony Tawa, Charles Amelotti, and Jeff Carlton of Sverdrup & Parcel. James Sherman, Program Manager, Mark Hereth, Project Director, Michael Zapkin, Aluminum Forming Task Leader, Ronald Dickson, Marc Papai, Robert Curtis, John Collins, and Thomas Grome contributed in specific assignments in the final preparation of this document.

The project was conducted by the Environmental Protection Agency, Ernst P. Hall, Chief, Metals & Machinery Branch. The technical project officer is Janet K. Goodwin, previous technical project officers include Carl Kassebaum, and Stewart Colton. The projects legal advisor is Jill Weller; previous legal advisors who contributed to this project include Ellen Maldonado, Mike Dworkin, Richard Shechter, and Daniel Glama. The economic project officer is Joseph Yance; previous economic project officers include John Atamen, Emily Hartnell, and William Webster. Contributions from the Monitoring & Data Support Division came from Eleanor Zimmerman; prevous work was done by Richard Silver, and Alexandra Tarnay.

The cooperation of the Aluminum Association, Inc., their technical committee, and the individual aluminum forming companies whose plants were sampled and who submitted detailed information in response to questionnaires is gratefully appreciated.

Acknowledgement and appreciation is also given to the secretarial staff of Radian Corporation (Nancy Reid, Sandra Moore, Deborah Dodd, Faith Dick, and Pamela Amshey) and to the word processing staff of the Effluent Guidelines Division (Kaye Storey, Pearl Smith, Carol Swann, and Glenda Clarke) for their efforts in the typing of drafts, necessary revisions, and preparation of this effluent guidelines document.

SECTION XV

REFERENCES

Adin, A., Baumann, E. R., Cleasby, J. L., 1979, "The Application of Filtration Theory to Pilot-Plant Design," Journal of the American Water Works Association, January.

Alloid Colloids, Inc. brochure.

Aluminum Association, The Story of Aluminum.

Aluminum Company of Canada, LTD, 1961, Handbook of Aluminum, 2nd ed., Montreal.

American Cyanamid Company brochure.

American Society for Metals, 1964, Heat Treating, Cleaning, and Finishing, Metals Handbook, 8th ed., Vol. 2, OH.

American Society for Metals, 1967, Aluminum, Volume III, Fabrication and Finishing, ed. Van Horn, K. R., Metals Park, OH.

American Society for Metals, 1970, Forging and Casting, Metals Handbook, 8th ed., Vol. 5, OH.

Amstead, B. H., Ostwald, P. F., Begeman, M. L., 1977, Manufacturing Processes, 7th ed., John Wiley & Sons, NY.

API, 1969, Manual on Disposal of Refinery Wastes: Volume on Liquid Wastes, 1st ed., American Petroleum Institute, Washington, D.C.

Argo and Wesner, 1976, "AWT Energy Needs a Prime Concern," Water and Wastes Engineering, 13:5:24.

Banerji and O'Conner, 1977, "Designing More Energy Efficient Wastewater Treatment Plants," Civil Engineering ASCE, 47:7:76.

Bansal, I. K., 1977, "Reverse Osmosis and Ultrafiltration of Oily and Pulping Effluents," Industrial Wastes, May/June.

Barnard, J. L., Eckenfelder, W. W. Jr., 1971, Treatment Cost Relationships for Industrial Waste Treatment, Technical Report #23, Vanderbilt University.

Bauer, D., 1976, "Treatment of Oily Wastes--Oil Recovery Programs," Presented at 31st Annual Purdue Industrial Waste Conference.

Basselievre, E. B., Schwartz, M., 1976, The Treatment of Industrial Wastes, McGraw-Hill Book Co., New York, NY.

Betz Labs brochure.

Brody, M. A., Lumpkins, R. J., 1977, "Performance of Dual Media Filters," Chemical Engineering Progress, April.

Burns and Roe, 1979, Draft Technical Report for the Paint Industry.

Carborundum, 1977, "Dissolved Air Flotation Systems," December.

Catalytic, Inc., 1979, Treatment Catalogue for the Catalytic Computer Model.

Chemical Engineering, 1979, "Love Canal Aftermath: Learning from a Tragedy," Chemical Engineering, October 22.

Chemical Marketing Reporter, March 17, 1978.

Cheremisinoff, P. N., Ellerbusch, F., 1978, Carbon Adsorption Handbook, Ann Arbor Science, Ann Arbor, MI.

Chieu, J. H., Gloyna, E. F., Schechter, R. S., 1975, "Coalescence of Emulsified Oily Wastewater by Fibrous Beds," Presented at the 30th Annual Purdue Industrial Waste Conference.

Clark, J. W., Viessman, W., Hammer, M. S., 1977, Water Supply and Pollution Control, IEP-A Dun-Donnelley Publisher, New York, NY.

Culp and Culp, 1974, New Concepts in Water Purification, Van Nostrand Reinhold, New York, NY.

Culp, R. L., Wesner, G. M., Culp, G. L., 1978, Handbook of Advanced Wastewater Treatment, Van Nostrand Reinhold Company, New York, NY.

Davies, B. T., Vose, R. W., 1977, "Custom Designs Cut Effluent Treatment Costs, Case Histories at Chevron, U.S.A., Inc.," Purdue Industrial Waste Conference, p. 1035.

Dearborn Chemical Division brochure.

Denyo, D. J., ed., 1978, Unit Operations for Treatment of Hazardous Wastes.

Dickey, 1970, "Managing Waste Heat with the Water Cooling Tower," Marley Co.

Dugas, R. S., Reed, P. E., 1977, "Successful Pretreatment and Deep Well Injection of Chemical Plant Wastewater," Presented at 32nd Annual Purdue Industrial Waste Conference.

Dynatech RID Company, 1969, A Survey of Alternate Methods for Cooling Condenser Discharge Water, Large-Scale Heat Rejection Equipment, EPA Project No. 16130DH3.

Eckenfelder, W. W. Jr., O'Connor, D. J., 1961, Biological Waste Treatment, Pergamon Press, NY.

Envirodyne, "Dissolved Air Flotation & Solids Settling - Model Jupitor - 7,000."

Environmental Quality Systems, Inc., 1973, Technical and Economic Review of Advanced Waste Treatment Processes.

Federal Register, 43FR2150gff.

Federal Register, 44FR15926ff.

Federal Register, 44FR28716ff.

Federal Register, 44FR43660ff.

Federal Register, 44FR56628ff.

Ford, D. L., Elton, R. L., 1977, "Removal of Oil and Grease from Industrial Wastewaters," Chemical Engineering, October 17, p. 49.

Gloyna, E. F., Ford, D. L., 1974, Cited by Osamor, F. A., Ahlert, R. C., 1978, in Oil Water Separation: State-of-the-Art, U.S. Environmental Protection Agency, Cincinnati, OH, PB-280 755.

Gross, A. C., 1979, "The Market for Water Management Chemicals," Environmental Science & Technology, 13:9:1050.

Guthrie, K. M., 1969, "Capital Cost Estimating," Chemical Engineering, March 24.

Hagan and Roberts, 1976, "Energy Requirements for Wastewater Treatment Plants, Part 2," Water and Sewage Works, 124:12:52.

Hager, D. G., 1974, "Industrial Wastewater Treatment by GAC," Industrial Water Engineering, 11:1:18.

Hammer, M. J., 1975, Water and Wastewater Technology, John Wiley & Sons, Inc., New York, NY.

Hawley, Gessner G., rev., The Condensed Chemical Dictionary, 9th ed.

Hercules brochure.

Hockenbury, M. R., Loven, A. W., 1977, "Treating Metal Forging and Processing Wastewater," Industrial Wastes, 23:3:45.

Howes, Robert and Kent, Robert, 1970, Hazardous Chemicals Handling and Disposal, Noyes Data Corp., Park Ridge, NJ.

Hsiung, K. Y., Mueller, H. M., Conley, W. R., 1974, "Physical-Chemical Treatment for Oily Waste," Presented at WWEMA Industrial Water Pollution Conference and Exposition, Detroit, MI, Cited by Osamor, F. A., Ahlert, R. C., 1978, Oil/Water Separation: State-of-the-Art, U.S. Environmental Protection Agency, Cincinnati, OH, PB-280 755.

Hutchins, R. A., 1975, "Thermal Regeneration Costs," Chemical Engineering Prog., 71:5:80.

Industrial Water Engineering, 1970, "Cooling Towers - Special Report," May.

Infilco Degremont, Inc., 1974, "Sediflotor Clarifier," Company Brochure DB830, September.

Jones, H. R., 1971, Environmental Control in the Organic and Petrochemical Industries, Noyes Data Corp., Park Ridge, NJ.

Journal of Metal Finishing: "Guidelines for Wastewater Treatment," September and October, 1977.

Kaiser Aluminum & Chemical Sales, Inc., 1954, "Kaiser Aluminum Rod, Bar, and Wire," Chicago, IL.

Katnick, K. E., Pavilcius, A. M., 1978, "A Novel Chemical Approach for the Treatment of Oily Wastewaters," Presented at 33rd Annual Purdue Industrial Waste Conference.

Kirk-Othmer, Encyclopedia of Chemical Technology, 2nd ed., 1963, Interscience Publishers, New York, NY.

Koon, J. H., Adams, C. E. Jr., Eckenfelder, W. W., 1973, "Analysis of National Industrial Water Pollution Control Costs," Associated Water and Air Resources Engineers, Inc.

Krockta, H., Lucas, R. L., 1972, "Information Required for the Selection and Performance Evaluation of Wet Scrubbers," Journal of the Air Pollution Control Association, June.

Kumar, J. I., Clesceri, N. L., 1973, "Phosphorus Removal from Wastewaters: A Cost Analysis," Water & Sewage Works, 120:3:82.

Lacey, R. E., 1972, "Membrane Separation Processes," Chemical Engineering, Sept. 4.

Lange, Norbert, Adolph, 1973, Handbook of Chemistry, McGraw-Hill, New York, NY.

Lee, E. L., Schwab, R. E., 1978, "Treatment of Oily Machinery Waste," Presented at 33rd Annual Purdue Industrial Waste Conference.

Light Metal Age, 1976, "A New Russian Water-Based Emulsion for Cold-Rolling Aluminum," October.

Light Metal Age, 1978, "SCAL's 'Jumbo 3C' - A Big Step Forward in Continuous Casting of Aluminum Sheet," April, pp. 6-12.

"Lime for Water and Wastewater Treatment: Engineering Data," BIF, Providence, Ref. No. 1.21-24.

Lin, Y. G., Lawson, J. R., 1973, "Treatment of Oily and Metal Containing Wastewater," Pollution Engineering, November.

Lopez, C. X., Johnston, R., 1977, "Industrial Wastewater Recycling with Ultrafiltration and Reverse Osmosis," Presented at the 32nd Annual Purdue Industrial Waste Conference.

Lund, H. F., ed., 1971, Industrial Pollution Control Handbook, McGraw-Hill Book Co., New York, NY.

Luthy, R. G., Selleck, R. E., Galloway, 1978, "Removal of Emulsified Oil with Organic Coagulants and Dissolved Air Flotation," Journal Water Pollution Control Federation, 50:2:331.

Maeder, E. G., 1975, "The D&I Can: How & Why it Does More with Less Metal," Modern Metals, August, pp. 55-62.

Mastrovich, I. D., 1975, "Aluminum Can Manufacture," Lubrication, Vol. 61, Texaco, Inc., April-June, pp. 17-36.

McKee, J. E. and Wolf, H. W., ed., 1963, Water Quality Criteria, 2nd ed., The Resources Agency of California, State Water Quality Control Board, Publication No. 3-A.

McKinney, R. E., 1962, Microbiology for Sanitary Engineers, McGraw-Hill Book Co., Inc., NY.

Met-Pro brochure.

Mono-Scour brochure.

Myansnikov, I. N., Butseva, L. N., Gandurina, L. B., 1979, "The Effectiveness of Flotation Treatments with Flocculants Applied to Oil Wastewaters," Presented at USEPA Treatment of Oil Containing Wastewaters, April 18 to 19, 1979, Cincinnati, OH.

National Commission on Water Quality, 1976, Water Pollution Abatement Technology: Capabilities and Cost, PB-250 690-03.

Nebolsine, R., 1970, "New Methods for Treatment of Wastewater Streams," Presented at 25th Annual Purdue Industrial Waste Conference.

NTIS, 1974, Cost of Dissolved Air Flotation Thickening of Waste Activated Sludge at Municipal Sewage Treatment Plants, PB-226-582.

Osamor, F. A., Ahlert, R. C., 1978, Oily Water Separation: State-of-the-Art, U.S. Environmental Protection Agency, Cincinnati, OH, EPA-600/2-78-069.

Patterson, James W., Wastewater Treatment Technology.

Patterson, J. W., 1976, "Technology and Economics of Industrial Pollution Abatement," Illinois Institute for Environmental Quality, Document No. 76/22.

Peoples, R. F., Krishnan, P., Simonsen, R. N., 1972, "Nonbiological Treatment of Refinery Wastewater," Journal Water Pollution Control Federation, November.

Personal communication with Dave Baldwin of Tenco Hydro, Inc.

Personal communication with Jeff Busse of Envirex.

Personal communication with Envirodyne sales representative.

Personal communication with Goad, Larry and Company.

Personal communication with Kerry Kovacs of Komline-Sanderson.

Personal communication with Don Montroy of the Brenco Corporation representing AFL Industries.

Personal communication with Jack Walters of Infilco-Degremont, Inc.

Personal communication with Leon Zeigler of Air-o-Flow.

Pielkenroad Separator Company brochure.

Quinn, R., Hendershaw, W. K., 1976, "A Comparison of Current Membrane Systems Used in Ultrafiltration and Reverse Osmosis," Industrial Water Engineering.

Raiford, P. K., 1975, "The Properzi Process for Continuous Cast and Rolled Rod," Light Metal Age, December, pp. 16-22.

Redhair, M. L., 1977, "Degassing and Filtering Methods," Light Metal Age, December, p. 22.

Regan, P. C., 1971, "Recent Developments in the Hazelett Process for Continuous Casting of Aluminum Sheet and Rod," Light Metal Age, April, pp. 10-15.

Richardson Engineering Services, Inc., 1980, General Construction Estimating Standards, Solana Beach, CA.

Rizzo, J. L., Shephard, A. R., 1977a, "Treating Industrial Wastewater with Activated Carbon," Chemical Engineering, January 3, p. 95.

Rizzo, J. L., Shephard, A. R., 1977b, "Treating Industrial Wastewater with Activated Carbon," Chemical Engineering, September 3.

Robert Snow Means Company, Inc., 1979, Building Construction Cost Data 1979, Robert Snow Means Company, Inc., Duxbury, MA.

Roberts, K. L., Weeter, D. W., Ball, R. O., 1978, "Dissolved Air Flotation Performance," 33rd Annual Purdue Industrial Waste Conference, p. 194.

Sabadell, J. E., ed., 1973, Traces of Heavy Metals in Water Removal Processes and Monitoring, USEPA, 902/9-74-001.

Sawyer, C. N., McCarty, P. L., 1967, Chemistry for Sanitary Engineering, McGraw-Hill Book Co., NY.

Sax, N. Irving, _____, Dangerous Properties of Industrial Materials, Van Nostrand Reinhold Co., New York, NY.

Sax, N. Irving, 1974, Industrial Pollution, Van Nostrand Reinhold Co., New York, NY.

Sebastian, F. P., Lachtman, D. W., Kominek, E., Lash, L., 1979, "Treatment of Oil Wastes Through Chemical, Mechanical, and Thermal Methods," Symposium: Treatment of Oil-Containing Wastewater, April 18-19, Cincinnati, OH.

Seiden and Patel, Mathematical Model of Tertiary Treatment by Lime Addition, TWRC-14.

Smith, J. E., 1977, "Inventory of Energy Use in Wastewater Sludge Treatment and Disposal," Industrial Water Engineering, 14:4:20.

Smith, R., 1968, "Cost of Conventional and Advanced Treatment of Wastewater," Journal Water Pollution Control Federation, 40:9:1546.

Sonksen, M. K., Sittig, M. F., Maziarz, E F., 1978, "Treatment of Oily Wastes by Ultrafiltration/Reverse Osmosis - A Case History," Presented at 33rd Annual Purdue Industrial Waste Conference.

Spatz, D. D., 1974, "Methods of Water Purification," Presented to the American Association of Nephrology Nurses and Technicians of the NSAIO-AANNT Joint Conference, Seattle, Washington, April 1972, Revised July 1974.

Steel, E. W., 1960, Water Supply and Sewerage, McGraw-Hill Book Company, Inc., New York, NY.

Stephens, W. E., Vassily, G., 1971, "The Hunter Process of Strip Casting," Light Metal Age, April, pp. 6-8.

Strier, M. P., 1978, "Treatability of Organic Priority Pollutants - Part C - Their Estimated (30-Day Average) Treated Effluent Concentration - A Molecular Engineering Approach," Report to Robert B. Schaffer, Director, EPA Effluent Guidelines Division, July 11; and "Treatability of Organic Priority Pollutants - Part D - The Pesticides - Their Estimated (30-Day Average) Treated Effluent Concentration," December 26.

Sverdrup & Parcel and Associates, Inc., 1977, Study of Selected Pollutant Parameters in Publicly Owned Treatment Works, Draft report submitted to EPA-Effluent Guidelines Division, February.

Symons, J. M., 1978, Interim Treatment Guide for Controlling Organic Contaminants in Drinking Water Using Granular Activated Carbon, Water Supply Research Division, Municipal Environmental Research Laboratory, Office of Research and Development, Cincinnati, OH.

Szekely, A. G., 1976, "The Removal of Solid Particles from Molten Aluminum in the Spinning Nozzle Inert Flotation Process," Metallurgical Transactions B, Volume 7B, June.

Tabakin, R. B., Trattner, R., Cheremisinoff, P. N., 1978a, "Oil/Water Separation Technology: The Options Available - Part 1," Water and Sewage Works, Vol. 125, No. 8, August.

Tabakin, R. B., Trattner, R., Cheremisinoff, P. N., 1978b, "Oil/Water Separation Technology: The Options Available - Part 2," Water and Sewage Works, Vol. 125, No. 8, August.

Thompson, C. S., 1972, "Cost and Operating Factors for Treatment of Oily Waste Water," Oil and Gas Journal, 70:47:53.

Throup, W. M., 1976, "Why Industrial Wastewater Pretreatment?" Industrial Wastes, July/August, p. 32.

U.S. Department of Interior, FWPCA, 1967, Industrial Waste Profile No. 5 Petroleum Refining, Vol. III.

U.S. Department of Interior, 1968a, Cost of Wastewater Treatment Processes, TWRC-6.

U.S. Department of Interior, 1968b, Preliminary Design and Simulation of Conventional Wastewater Renovation Systems Using the Digital Computer, USDI-WP-20-9.

U.S. Department of Interior, 1969, Appraisal of Granular Carbon Contacting, Report No. TWRC-12.

U.S. Environmental Protection Agency, 1971a, Estimating Costs and Manpower Requirements for Conventional Wastewater Treatment Facilities, Water Pollution Control Research Series, 17090 DAN.

U.S. Environmental Protection Agency, 1971b, Experimental Evaluation of Fibrous Bed Coalescers for Separating Oil-Water Emulsions, 12050 DRC, November.

U.S. Environmental Protection Agency, 1973a, Capital and Operating Costs of Pollution Control Equipment Module - Vol. II, EPA-R5-73-023b.

U.S. Environmental Protection Agency, 1973b, Electrical Power Consumption for Municipal Wastewater Treatment, EPA-R2-73-281.

U.S. Environmental Protection Agency, 1973c, Estimating Staffing for Municipal Wastewater Treatment Facilities, EPA-68-01-0328.

U.S. Environmental Protection Agency, 1973d, Process Design Manual for Carbon Adsorption, EPA-625/1-71-002a.

U.S. Environmental Protection Agency, 1974a, Development Document for Effluent Limitations Guidelines and New Source Performance Standards for the Petroleum Refining Point Source Category, EPA-440/1-74-014a, April.

U.S. Environmental Protection Agency, 1974b, Development Document for Effluent Limitations Guidelines and New Source Performance Standards for the Steam Electric Power Generating Point Source Category, EPA-440/1-74-014a, April.

U.S. Environmental Protection Agency, 1974c, Flow Equalization, EPA-625/4-74-006.

U.S. Environmental Protection Agency, 1974d, Policy Statement on Acceptable Methods of Utilization or Disposal or Sludges, Washington, D.C..

U.S. Environmental Protection Agency, 1974e, Development Document for Effluent Limitations Guidelines and New Source Performance Standards for the Secondary Aluminum Subcategory of the Aluminum Segment of the Nonferrous Metals Manufacturing Point Source Category, EPA-440/1-74-019e.

U.S. Environmental Protection Agency, 1974g, "Wastewater Filtration-Design Considerations," EPA Technology Transfer Seminar Publication, July.

U.S. Environmental Protection Agency, 1975a, A Guide to the Selection of Cost-Effective Wastewater Treatment System, EPA-430/9-75-002.

U.S. Environmental Protection Agency, 1975b, Costs of Wastewater Treatment by Land Application, EPA-430/9-75-003, June.

U.S: Environmental Protection Agency, 1975c, Evaluation of Land Application Systems, EPA-430/9-75-001, March.

U.S. Environmental Protection Agency, 1975d, Lime Use in Wastewater Treatment Design and Cost Data, EPA-600/2-75-038.

U.S. Environmental Protection Agency, 1975e, Process Design Manual for Suspended Solids Removal, EPA-625/1-75-003a.

U.S. Environmental Protection Agency, 1976a, Cost Estimating Manual--Combined Sewer Overflow Storage and Treatment, EPA-600/2-76-286.

U.S. Environmental Protection Agency, 1976b, Land Treatment of Municipal Wastewater Effluents. Design Factors - I, EPA Technology Transfer Seminar Publication.

U.S. Environmental Protection Agency, 1976c, Land Treatment of Municipal Wastewater Effluents. Design Factors - II, EPA Technology Transfer Seminar Publication.

U.S. Environmental Protection Agency 1976d, Land Treatment of Municipal Wastewater Effuents. Case Histories, EPA Technology Transfer Seminar Publication.

U.S. Environmental Protection Agency, 1976e, Supplement for Pretreatment to the Interim Final Development Document for the Secondary Aluminum Segment of the Nonferrous Metals Manufacturing Point Source Category, EPA-440/1-76-018c.

U.S. Environmental Protection Agency, 1977a, Controlling Pollution from the Manufacturing and Coating of Metal Products - Vol. 2, Solvent Metal Cleaning Air Pollution Control, Environmental Research Information Center, Technology Transfer, May.

U.S. Environmental Protection Agency, 1977b, Controlling Pollution from the Manufacturing and Coating of Metal Products: Water Pollution Control, EPA Technology Transfer Seminar Publication, May, EPA-625/3-77-009.

U.S. Environmental Protection Agency, 1977c, Draft Development Document for Interim Final Effluent Limitations Guidelines and New Source Performance Standards for the Miscellaneous Nonferrous Metals Segment, EPA-440/1-76/067.

U.S. Environmental Protection Agency, 1977d, State-of-the-Art of Small Water Treatment Systems, Office of Water Supply.

U.S. Environmental Protection Agency, 1977e, Supplement for Pretreatment to the Development Document for the Petroleum Refining Industry Existing Point Source Category, March.

U.S. Environmental Protection Agency, 1978a, Analysis of Operation and Maintenance Costs for Municipal Wastewater Treatment Systems, EPA-430/9-77-015.

U.S. Environmental Protection Agency, 1978b, Construction Costs for Municipal Wastewater Conveyance System: 1973-1977, EPA-430/9-77-014.

U.S. Environmental Protection Agency, 1978c, Construction Costs for Municipal Wastewater Treatment Plants: 1973-1977, EPA-430/9-77-013.

U.S. Environmental Protection Agency, 1978d, Development Document for Proposed Existing Source Pretreatment Standards for the Electroplating Point Source Category, EPA-440/1-78/085, February.

U.S. Environmental Protection Agency, 1978e, Estimating Costs for Water Treatment as a Function of Size and Treatment Plant Efficiency, EPA-600/2-78/182.

U.S. Environmental Protection Agency, 1978f, Innovative and Alternative Technology Assessment Manual, EPA-430/9-78-009.

U.S. Environmental Protection Agency, 1978g, Process Design Manual for Municipal Sludge Landfills, EPA Technology Transfer, EPA-625/1-78-010, SW-705, October.

U.S. Environmental Protection Agency, 1978h, Revised Economic Impact Analysis of Proposed Regulations on Organic Contamination Drinking Water, Office of Drinking Water.

U.S. Environmental Protection Agency, 1979a, Dissolved Air Flotation of Gulf Shrimp Cannery Wastewater, EPA-600/2-79-061.

U.S. Environmental Protection Agency, 1979b, Draft Development Document for Proposed Effluent Limitations Guidelines and Standards for the Iron and Steel Manufacturing Point Source Category, Vol. III, EPA-440/1-79-024a.

U.S. Environmental Protection Agency, 1979c, Draft Development Document for Effluent Limitations Guidelines and Standards for the Nonferrous Metals Manufacturing Point Source Category, EPA-440/1-79/019a.

U.S. Environmental Protection Agency, 1979d, Process Design Manual for Sludge Treatment and Disposal, EPA-625/1-79-011, September.

U.S. Environmental Protection Agency, 1979e, Technical Study Report BATEA - NSPS - PSES - PSNS, Major Nonferrous Metals, Contract Nos. 68-01-3289, 68-01-4906.

U.S. Environmental Protection Agency, 1979f, Environmental Pollution Control Alternatives: Economics of Wastewater Treatment Alternatives for the Electroplating Industry, EPA Technology Transfer, EPA-625/5-79-016, June.

U.S. Environmental Protection Agency, 1980, Draft Development Document for Effluent Limitations Guidelines and Standards for the Aluminum Forming Point Source Category, EPA 440/1-80/073-a, September.

U.S. Environmental Protection Agency, 1981a, Development Document for Proposed Effluent Limitations Guidelines and Standards for the Porcelain Enameling Point Source Category, EPA 440/1-81/072-b, January.

U.S. Environmental Protection Agency, 1981b, Development Document for Proposed Effluent Limitations Guidelines and Standards for the Coil Coating Point Source Category, EPA 440/1-81/071-b, January.

U.S. Environmental Protection Agency, 1982, Development Document for Proposed Effluent Limitations Guidelines and Standards for the Metal Finishing Point Source Category, EPA 440/1-82/091-b, August.

U.S. Environmental Protection Agency, U.S. Army Corps of Engineers, U.S. Department of Agriculture, 1977, Process Design Manual for Land Treatment of Municipal Wastewater, EPA-625/1-77-008, October.

Verschueren and Karel, 1972, Handbook of Environmental Data on Organic Chemicals, Van Nostrand Reinhold Co., New York, NY.

Wahl, J. R., Hayes, T. C., Kleper, M. H., Pinto, S. D., 1979, "Ultrafiltration for Today's Oily Wastewaters: A Survey of Current Ultrafiltration Systems," Presented at 34th Annual Purdue Industrial Waste Conference.

Water Pollution Control Federation, 1977, MOP/8: Wastewater Treatment Plant Design, WPCF, Washington, D.C.

Wyatt, M. J., White, P. E. Jr., 1975, Sludge Processing, Transportation, and Disposal/Resource Recovery: A Planning Perspective, Report No. EPA-WA-75-R024, December.

Zievers, J. F., Crain, R. A., Barclay, F. G., 1968, "Waste Treatment in Metal Finishing: U.S. and European Practices," Cited by Technology and Economics of Industrial Pollution Abatement, Illinois Institute for Environmental Quality, Document No. 76/22. as well as other pollutants including halogenated organics.

SECTION XVI

GLOSSARY

This section is an alphabetical listing of technical terms (with definitions) used in this document which may not be familiar to the reader.

4-AAP Colorimetric Method

An analytical method for total phenols and total phenolic compounds that involves reaction with the color developing agent 4-aminoantipyrine.

Acid Dip

Using any acid for the purpose of cleaning any material. Some methods of acid cleaning are pickling and oxidizing.

Acidity

The quantitative capacity of aqueous solutions to react with hydroxyl ions. Measured by titration with a standard solution of a base to a specified end point. Usually expressed as milligrams per liter of calcium carbonate.

The Act

The Federal Water Pollution Control Act Amendments of 1972 as amended by the Clean Water Act of 1977 (PL 92-500).

Aging

A change in the properties of certain metals and alloys that occurs at ambient or moderately elevated temperatures after hot working or heat treatment (quench aging in ferrous alloys, natural or artificial aging in ferrous and nonferrous alloys) or after a cold working operation (strain aging). The change in properties is often due to a phase change (precipitation), but never involves a change in chemical composition of the metal or alloy.

Alkaline Cleaning

A proces where dirt, mineral and animal fats, and oils are removed from the metal surface by exposure to solutions at high temperatures containing alkaline compounds, such as caustic soda, soda ash, alkaline silicates, and alkaline phosphates.

Alkalinity

The capacity of water to neutralize acids, a property imparted by the water's content of carbonates, bicarbonates, hydroxides, and occasionally borates, silicates, and phosphates. It is measured by titration with a standardized acid to a specified end point, and is usually reported in milligrams per liter of calcium carbonate.

Amortization

The allocation of a cost or account according to a specified schedule, based on the principal, interest and period of cost allocation.

Analytical Quantification Level

The minimum concentration at which quantification of a specified pollutant can be reliably measured.

Ancillary Operations

Operations that discharge significant amounts of pollutants and wastewater flows that may or may not be present at any one facility belonging to the subcategory.

Annealing

A generic term describing a metals treatment process that is used primarily to soften metallic materials, but also to simultaneously produce desired changes in other properties or in microstructure. The purpose of such changes may be, but is not confined to, improvement of machinability, facilitation of cold work, improvement of mechanical or electrical properties, and/or increase in stability of dimensions. Annealing consists of heating and cooling the metal at varying rates to achieve the desired properties.

Backwashing

The operation of cleaning a filter or column by reversing the flow of liquid through it and washing out matter previously trapped.

Batch Treatment

A waste treatment method where wastewater is collected over a period of time and then treated prior to discharge. Treatment is not continuous, but collection may be continuous.

Bench Scale Pilot Studies

Experiments providing data concerning the treatability of a wastewater stream or the efficiency of a treatment process conducted using laboratory-size equipment.

Best Available Demonstrated Technology (BADT)

Treatment technology upon new source performance standards as defined by Section 306 of the Act.

Best Available Technology Economically Achievable

Level of technology applicable to toxic and nonconventional pollutants on which effluent limitations are established. These limitations are to be achieved by July 1, 1984 by industrial discharges to surface waters as defined by Section 301(b)(2)(C) of the Act.

Best Conventional Pollutant Control Technology (BCT)

Level of technology applicable to conventional pollutant effluent limitations to be achieved by July 1, 1984 for industrial discharges to surface waters as defined in Section 301(b)(2)(E) of the act.

Best Management Practices (BMP)

Regulations intended to control the release of toxic and hazardous pollutants from plant runoff, spillage, leaks, solid waste disposal, and drainage from raw material storage.

Best Practicable Control Technology Currently Available (BPT)

Level of technology applicable to effluent limitations to have been achieved by July 1, 1977 (originally) for industrial discharges to surface waters as defined by Section 301(b)(1)(A) of the Act.

Billet

A long slender cast product used as raw material in subsequent forming operations.

Biochemical Oxygen Demand (BOD)

The quantity of oxygen used in the biochemical oxidation of organic matter under specified conditions for a specified time.

Blowdown

The minimum discharge of circulating water for the purpose of discharging dissolved solids or other contaminants contained in the water, the further buildup of which would cause concentration in amounts exceeding limits established by best engineering practice.

Catalyst

An agent that (1) reduces the energy required for activating a chemical reaction and (2) is not consumed by that reaction.

Chelation

The formation of coordinate covalent bonds between a central metal ion and a liquid that contains two or more sites for combination with the metal ion.

Chemical Finishing

Producing a desired finish on the surface of a metallic product by immersing the workpiece in a chemical bath.

Chemical Oxygen Demand (COD)

A measure of the oxygen-consuming capacity of the organic and inorganic matter present in the water or wastewater.

Cleaning (see etching)

Cold Rolling

An operation that produces aluminum sheet with a thickness between 6.25 cm and 0.015 cm (0.249 to 0.006 inches) by passing the aluminum through a set of rolls. The process is an exothermic process and causes strain-hardening of the product.

Colloid

Suspended solids whose diameter may vary between less than one micron and fifteen microns.

Composite Samples

A series of samples collected over a period of time but combined into a single sample for analysis. The individual samples can be taken after a specified amount of time has passed (time composited), or after a specified volume of water has passed the sampling point (flow composited). The sample can be automatically collected and composited by a sampler or can be manually collected and combined.

Consent Decree (Settlement Agreement)

Agreement between EPA and various environmental groups, as instituted by the United States District Court for the District of Columbia, directing EPA to study and promulgate regulations for the toxic pollutants (NRDC, Inc. v. Train, 8 ERC 2120 (D.D.C. 1976), modified March 9, 1979, 12 ERC 1833, 1841).

Contact Water

Any water or oil that comes into direct contact with the aluminum, whether it is raw material, intermediate product, waste product, or finished product.

Continuous Casting

A casting process that produces sheet, rod, or other long shapes by solidifying the metal while it is being poured through an open-ended mold using little or no contact cooling water. Thus, no restrictions are placed on the length of the product and it is not necessary to stop the process to remove the cast product.

Continuous Treatment

Treatment of waste streams operating without interruption as opposed to batch treatment. Sometimes referred to as flow-through treatment.

Contractor Removal

Disposal of oils, spent solutions, or sludge by a commercial firm.

Conventional Pollutants

Constitutents of wastewater as determined by Section 304(a)(4) of the Act, including but not limited to pollutants classified as biological-oxygen-demanding, oil and grease, suspended solids, fecal coliforms, and pH.

Conversion Coating

A coating produced by chemical or electrochemical treatment of a metallic surface that gives a surface layer containing a compound of the metal. For example, chromate coatings on zinc and cadmium, oxide coatings on steel.

Cooling Tower

A hollow, vertical structure with internal baffles designed to break up falling water so that it is cooled by upward-flowing air and the evaporation of water.

Core Stream

A waste stream generated by operations that always occur within a particular subcategory.

Counter Current Rinsing

A staged process that employs recycled, often untreated water as a rinsing medium to clean metal products. Water flow is opposite to product flow such that the most contaminated water encounters incoming product first.

Data Collection Portfolio (dcp)

The questionnaire used in the survey of the aluminum forming industry.

Degassing

The removal of dissolved hydrogen from the molten aluminum prior to casting. This process also helps to remove oxides and impurities from the melt.

Deoxidizing

The removal of any oxide film (such as aluminum oxide) from a metal.

Desmutting

A process that removes a residual silt (smut) by immersing the product in an acid solution, usually nitric acid.

Direct Chill Casting

A method of casting where the molten aluminum is poured into a water-cooled mold. The base of this mold is the top of a hydraulic cylinder that lowers the aluminum first through the mold and then through a water spray and bath to cause solidification. The vertical distance of the drop limits the length of the ingot. This process is also known as semi-continuous casting.

Direct Discharger

Any point source that discharges to a surface water.

Dragout

The solution that adheres to the objects removed from a bath or rinse, more precisely defined as that solution which is carried past the edge of the tank.

Drawing

Pulling the metal through a die or succession of dies to reduce the metal's diameter or alter its shape.

Drying Beds

Areas for dewatering of sludge by evaporation and seepage.

Effluent

Discharge from a point source.

Effluent Limitation

Any standard (including schedules of compliance) established by a state or EPA on quantities, rates, and concentrations of chemical, physical, biological, and other constituents that are discharged from point sources into navigable waters, the waters of the contiguous zone, or the ocean.

Electrochemical Finishing

Producing a desired finish on the surface of a metallic product by immersing the workpiece in an electrolyte bath through which direct current is passed.

Electroplating

The production of a thin coating of one metal on another by electrodeposition.

Electrostatic Precipitator (ESP)

A gas cleaning device that induces an electrical charge on a solid particle which is then attracted to an oppositely charged collector plate. The collector plates are intermittently vibrated to discharge the collected dust to a hopper.

Emulsifying Agent

A material that increases the stability of a dispersion of one liquid in another.

Emulsions

Stable dispersions of two immiscible liquids.

End-of-Pipe Treatment

The reduction of pollutants by wastewater treatment prior to discharge or reuse.

Etching

The removal of surface imperfections, oxides, and scratches by chemical action. Etching can also provide surface roughness.

Etching Line (cleaning line)

A series of baths and rinses designed to produce a desired surface finish on a workpiece.

Eutectic Temperature

The lowest temperature at which a solution (in this case, the solution is molten aluminum and various alloying materials) remains completely liquid.

Extrusion

A process in which high pressures are applied to a billet of aluminum, forcing the aluminum to flow through a die orifice.

Finishing

The coating or polishing of a metal surface.

Fluxes

Substances added to molten metal to help remove impurities and prevent excessive oxidation, or promote the fusing of the metals.

Foil Rolling

A process which produces aluminum foil less than 0.006 inches thick. Foil is usually produced by cold rolling.

Forging

A process that exerts pressure on die or rolls surrounding heated aluminum stock forcing the stock to take the shape of the dies.

Gas Chromatography/Mass Spectroscopy (GC/MS)

Chemical analytical instrumentation used for quantitative organic analysis.

Grab Sample

A single smample of wastewater taken without regard to time or flow.

Heat Treatment

A process that changes the physical properties of the metal, such as strength, ductility, and malleability by controlling the rate of cooling.

Homogenizing

Holding solidified aluminum at high temperature to eliminate or decrease chemical segregation by diffusion.

Hot Rolling

The process in which aluminum is heated to between 400°C and 495°C and passed through a set of rolls which reduces the thickness of the metal to a plate 6.3 mm (0.25 inches) thick or more. Hot rolling does not strain-harden the aluminum.

Indirect Discharger

Any point source that discharges to a publicly owned treatment works.

Inductively-Coupled Argon Plasma Spectrophotometer (ICAP)

A laboratory device used for the analysis of metals.

Ingot

A large, block-shaped casting produced by various methods. Ingots are intermediate products from which other products are made.

In-Process Control Technology

Any procedure or equipment used to conserve chemicals and water throughout the production operations, resulting in a reduction of the wastewater volume.

New Source Performance Standards (NSPS)

Effluent limitations for new industrial point sources as defined by Section 306 of the Act.

Nonconventional Pollutant

Parameters selected for use in performance standards that have not been previously designated as either conventional or toxic pollutants.

Non-Water Quality Environmental Impact

The ecological impact as a result of solid, air, or thermal pollution due to the application of various wastewater technologies to achieve the effluent guidelines limitations. Also associated with the non-water quality aspect is the energy impact of wastewater treatment.

NPDES Permits

Permits issued by EPA or an approved state program under the National Pollution Discharge Elimination System.

Off-Gases

Gases, vapors, and fumes produced as a result of an aluminum forming operation.

Oil and Grease (O&G)

Any material that is extracted by freon from an acidified sample and that is not volatilized during the analysis, such as hydrocarbons, fatty acids, soaps, fats, waxes, and oils.

pH

The pH is the negative logarithm of the hydrogen ion activity of a solution.

Pickling

The process of removing scale, oxide, or foreign matter from the surface of metal by immersing it in a bath containing a suitable chemical reagent that will attack the oxide or scale, but will not act appreciably upon the metal during the period of pickling. Frequently it is necessary to immerse the metal in a detergent solution or to degrease it before pickling.

Plate

A flat, extended, rigid body of aluminum having a thickness greater than or equal to 6.3 mm (0.25 inches).

Pollutant Parameters

Those constituents of wastewater determined to be detrimental and, therefore, requiring control.

Priority Pollutants

Those pollutants included in Table 2 of Committee Print number 95-30 of the "Committee on Public Works and Transportation of the House of Representatives," subject to the Act.

Process Water

Water used in a production process that contacts the product, raw materials, or reagents.

Production Normalizing Parameter (PNP)

The unit of production specified in the regulations used to determine the mass of pollution a production facility may discharge.

PSES

Pretreatment standards (effluent regulations) for existing sources.

PSNS

Pretreatment standards (effluent regulations) for new sources.

Publicly Owned Treatment Works (POTW)

A waste treatment facility that is owned by a state or municipality.

Recycle

Returning treated or untreated wastewater to the production process from which it originated for use as process water.

Reduction

A reaction in which there is a decrease in valence resulting from a gain in electrons.

Reuse

The use of treated or untreated process wastewater in a different production process.

Reverberatory Furnaces

Rectangular furnaces in which the fuel is burned above the metal and the heat reflects off the walls and into the metal.

Rinsing

A process in which water is used to wash etching and cleaning chemicals from the surface of metal.

Rod

An intermediate aluminum product having a solid, round cross section 9.5 mm (3/8 inches) or more in diameter.

Rolling

A forming process that reduces the thickness of a workpiece by passing it between a pair of lubricated steel rollers.

Scrubber Liquor

The untreated wastewater stream produced by wet scrubbers cleaning gases produced by aluminum forming operations.

Seal Water

A water curtain used as a barrier between the annealing furnance atmosphere and the outside atmosphere.

Semi-Fabricated Products

Intermediate products that are the final product of one process and the raw material for a second process.

Stationary Casting

A process in which the molten aluminum is poured into molds and allowed to air-cool. It is often used to recycle in-house scrap.

Strain-Hardening (see work-hardening)

Subcategorization

The process of segmentation of an industry into groups of plants for which uniform effluent limitations can be established.

Surface Water

Any visible stream or body of water, natural or man-made. This does not include bodies of water whose sole purpose is wastewater retention or the removal of pollutants, such as holding ponds or lagoons.

Surfactants

Surface active chemicals that tend to lower the surface tension between liquids.

Swaging

A process in which a solid point is formed at the end of a tube, rod, or bar by the repeated blows of one or more pairs of opposing dies. It is often the initial step in the drawing process.

Total Dissolved Solids (TDS)

Organic and inorganic molecules and ions that are in true solution in the water or wastewater.

Total Organic Carbon (TOC)

A measure of the organic contaminants in a wastewater. The TOC analysis does not measure as much of the organics as the COD or BOD tests, but is much quicker than these tests.

Total Recycle

The complete reuse of a stream, with makeup water added for evaporation losses. There is no blowdown stream from a totally recycled flow and the process water is not periodically or continuously discharged.

Total Suspended Solids (TSS)

Solids in suspension in water, wastewater, or treated effluent. Also known as suspended solids.

Tubing Blank

A sample taken by passing one gallon of distilled water through a composite sampling device before initiation of actual wastewater sampling.

Volatile Substances

Materials that are readily vaporizable at relatively low temperatures.

Wastewater Discharge Factor

The ratio between water discharged from a production process and the mass of product of that production process. Recycle water is not included.

Water Use Factor

The total amount of contact water or oil entering a process divided by the amount of aluminum product produced by this process. The amount of water involved includes the recycle and makeup water.

Wet Scrubbers

Air pollution control devices used for removing pollutants as the gas passes through the spray.

Wire

A slender strand of aluminum with a diameter less than 9.5 mm (3/8 inches).

Work-Hardening

An increase in hardness and strength and a loss of ductility that occurs in the workpiece as a result of passing through cold forming or cold working operations. Also known as strain-hardening.

Zero Discharger

Any industrial or municipal facility that does not discharge wastewater.

*U.S. GOVERNMENT PRINTING OFFICE : 1982 0-381-085/4485

United States
Environmental Protection
Agency

Washington DC 20460

Official Business
Penalty for Private Use
$300