EPA 742B98006

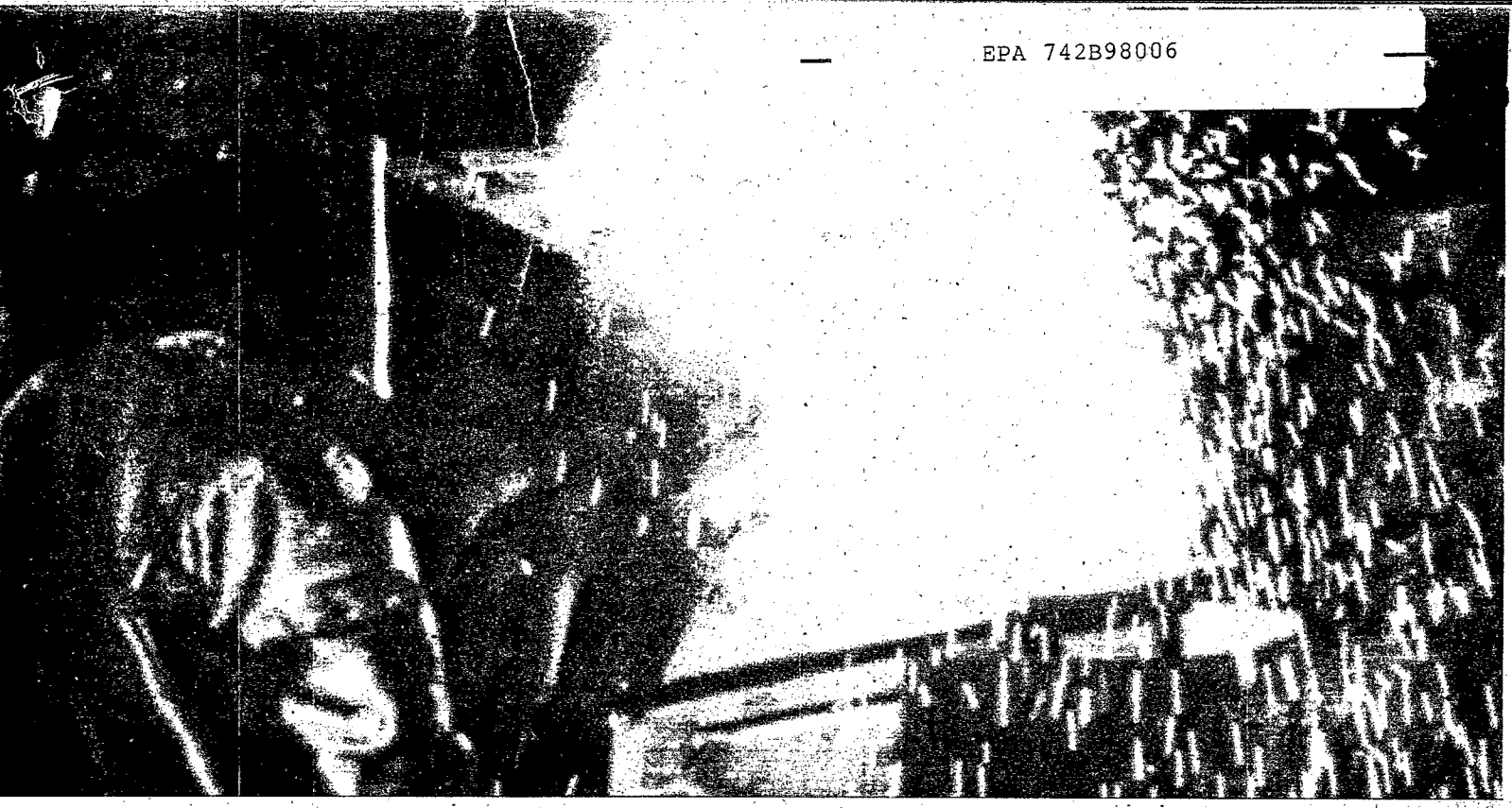

Pollution Prevention in the Primary Metals Industry:

A Manual for Pollution Prevention Technical Assistance Providers

The Illinois Waste Management and Research Center

A Division of the Illinois Department of Natural Resources

Reader Response Survey

Pollution Prevention for the Primary Metals Industry Manual - Reader Response Survey

This manual has been published as a pilot project to develop a comprehensive pollution prevention manual for technical assistance programs for the primary metals industry sector. In order to determine the utility and make improvements in future editions, we would like to hear from you. Your comments will enable us to increase the value of this document. Please take a few moments to answer some questions. When completed, simply fold in half, staple and mail the survey back. We appreciate your comments and suggestions.

Where did you learn about this report?

- WMRC newsletter
- EPA Pollution Prevention Information Clearinghouse (PPIC)
- Colleague
- E-mail announcement
- Internet site (please name)_____
- Other _____

For the following questions, please circle the number that best describes your level of agreement with each statement.

1. The overall quality (organization, content) of the manual was high.

   5 4 3 2 1

2. The manual provided a comprehensive overview of pollution prevention techniques for the primary metals industry.

   5 4 3 2 1

   If you felt the manual was not comprehensive what information was lacking:

   _____

   _____

   Was there any information that was unnecessary or inaccurate?

   _____

   _____

3. Information was easily located in the manual.

   5 4 3 2 1

4. Additional comments regarding the manual.

   _____

   _____

   _____

5. What type of organization do you work for?

- Federal/State/Local pollution prevention assistance program
- Federal/State/Local environmental regulatory program
- Other government (federal, state, or local) assistance program
- Environmental consultant
- Printing facility
- University-affiliated researcher
- Privately-employed researcher
- Environmental organization
- Student
- Other _____

6. Would you like to receive updated/revised copies of this manual?

Yes No

7. If you would like receive WMRC's quarterly newsletter, please complete the information below.

Name: _____
Title: _____
Company: _____
Address: _____
City: _____ State: _____ Zip: _____
Telephone: _____ Fax: _____
E-mail: _____

FOLD HERE, TAPE AND MAIL TO THE ADDRESS BELOW. THANK YOU!

#1116/1-5-33197
WMRC MC - 676
One E Hazelwood Dr
Champaign, IL 61820

NO POSTAGE NECESSARY IF MAILED IN THE UNITED STATES

BUSINESS REPLY MAIL
FIRST-CLASS MAIL PERMIT NO. 1239 CHAMPAIGN IL
POSTAGE WILL BE PAID BY ADDRESSEE

University of Illinois at Urbana-Champaign
Office of Mail Services MC - 663
1611 S Oak Street
Champaign, IL 61820-9978

Pollution Prevention In the Primary Metals Industry

A Manual for Pollution Prevention Technical Assistance Providers

April 1998

Printed on Recycled Paper

Table of Contents

Acknowledgments iii

Industry Overview 1

The Steel Making Industry 3
Background 3
Steel Production from Iron Ore 3
References 8
Annotated Bibliography 9
Case Study 9

Ferrous and Non-Ferrous Foundries 11
Foundry Processes 11
Pollution Prevention Methods for Foundries 16
References 19
Annotated Bibliography 19
Case Studies 20

Aluminum Smelting and Refining 23
Primary Aluminum Refining 23
Secondary Aluminum Production 24
Annotated Bibliography 25
Case Study 25

Copper Processing 27
Primary Production of Copper 27
Secondary Copper Processing 28
Annotated Bibliography 28

Lead Processing 29
Primary Lead Processing 29
Secondary Lead Processing 30
Annotated Bibliography 30

Zinc Processing 31
Primary Zinc Processing 31
Secondary Zinc Processing 31
Annotated Bibliography 32

Glossary 33

List of Tables

Table 1. Common Type of Metal Melting Furnaces 13

List of Figures

Figure 1. The Steel Making Process 4
Figure 2. The DIOS Process 6
Figure 3. Metal Casting Process 11
Figure 4. Green Sand Composition 12
Figure 5. Dry Sand Reclamation 17
Figure 6. Wet Sand Reclamation 17
Figure 7. Thermal Sand Reclamation 18

Acknowledgments

We would like to than U.S. EPA Office of Pollution Prevention and Toxics and the Northeast Waste Management Officials Association (NEWMOA) for funding to produce this information packet. Illinois Waste Management and Research Center (WMRC) staff, past and present, who contributed to this project include: Laura Barnes, Jerry Brown, Ester Burke, Laurie Case, Chris Harris, Tim Lindsey, Lisa Merrifield, Gary Miller, Jackie Peden, and Li-Chen Shen. We thank them for thier contributions.

We also would like to recognize the reviewers who provided valuable suggestions on improving this document. They are: Jerry Brown (WMRC), Laurie Case (WMRC), Randy Cook (Minnesota Technical Assistance Program), George Crandell, (Chrysler Indianapolis Foundry), LeRoy Euvrard (Safety and Environmental Staff), Dieter Leidel (Tanoak, Inc.), Tim Lindsey (WMRC), Jackie Peden (WMRC), Lisa Regenstein (NEWMOA).

Industry Overview

The primary metals industries include facilities that produce metal products from metal ore and / or scrap metal. Plants may refine metals, cast molten metal into desired shapes, or produce the inputs for the refining or casting process. Primary metals industries utilize both ferrous and non-ferrous metals and produce pure metal products or alloys in the form of end products or stock for use by other industries.

The primary metals industries included in this manual are covered by SIC 3300: Primary Metals. They include steel works, blast furnaces, and coke making; ferrous and non-ferrous foundry operations; and smelting and refining of common non-ferrous metals. Facilities may function as independent plants which sell metal products to other industries, or as part of a larger plant which produces metal pieces for use within a facility or company. Some facilities housed within larger operations may be classified under the SIC code of the larger operation.

Pollution associated with primary metals industries depends largely on the type of operation. The type of facility, metal and non-metal inputs, processes, and equipment all factor into the pollution sources and prevention opportunities. As such, the primary metals industries in this document have been divided into Steel Making (Chapter 2), Ferrous and Non-Ferrous Foundry Operations (Chapter 3) and Non-Ferrous Metal Refining, including aluminum (Chapter 4), copper (Chapter 5), lead (Chapter 6) and zinc (Chatper 7). The processes, waste streams and pollution prevention operations are discussed independently for each sector. Overlapping processes and pollution prevention opportunities are noted.

After being refined and cast, metal pieces are usually coated to prevent corrosion or enhance surface properties. Metal coating, electroplating, or surface-finishing is occasionally performed at foundries or other primary metal production plants. However, more often, it is performed at captive or job shops outside of primary metals facilities. Information about metal coating and surface finishing can be obtained in *Pollution Prevention and the Coating Industry* or *Pollution Prevention and the Metal Finishing Industry* manuals.

2 The Steel Making Industry

Background

Steel is an alloy of iron usually containing less than 1% carbon. It is used most frequently in the automotive and construction industries. Steel can be cast into bars, strips, sheets, nails, spikes, wire, rods or pipes as needed by the intended user. Based on statistics from *The 1992 Census of Manufacturing*, 1,118 steel manufacturing facilities currently exist in the United States. Steel production is a $9.3 billion dollar industry and employs 241,000 people.

The process of steelmaking has undergone many changes in the 20th century based on the political, social and technological atmosphere. In the 1950s and 1960s, demand for high quality steel encouraged the steelmaking industry to produce large quantities. Large, integrated steel mills with high capital costs and limited flexibility were built in the U.S. (Chatterjee, 1995). Integrated steel plants produce steel by refining iron ore in several steps and produce very high quality steel with well controlled chemical compositions to meet all product quality requirements.

The energy crisis of the 1970s made thermal efficiency in steel mills a priority. The furnaces used in integrated plants were very efficient; however, the common production practices needed to be improved. The large integrated plants of the 1950s and 1960s tended to produce steel in batches where iron ore was taken from start to finish. This causes some equipment to be idle while other equipment was in use. To help reduce energy use, continuous casting methods were developed. By keeping blast funraces continually feed with iron ore, heat is used more efficiently.

As environmental concerns have gained importance in the 1980s and 1990s, regulations have become more stringent, again changing the steelmaking industry. In 1995, compliance with environmental requirements was estimated to make up 20-30% of the capital costs in new steel plants (Chatterjee, 1995). Competition has also increased during the period do to decreasing markets and increasing foreign steel production plants. The competition has forced steelmaking facilities to reduce expenses and increase quality.

To meet these changing needs, just-in-time technology has become more prominent and integrated steel plants are being replaced with smaller plants, called mini-mills, that rely on steel scrap as a base material rather than ore. Mini-mills will never completely replace integrated steel plants because they cannot maintain the tight control over chemical composition, and thus cannot consistenly produce high quality steel. Mini-mills have a narrower production line and cannot produce the specialty products produced by integrated plants. Although technology continues to improve, in the mid 1990s, mini-mills captured less than half of the quality steel market.

Steel Production from Iron Ore

Steel production at an integrated steel plant involves three basic steps. First, the heat source used to melt iron ore is produced. Next the iron ore is melted in a furnace. Finally, the molten iron is processed to produce steel. These three steps can be done at one facility; however, the fuel source is often purchased from off-site producers.

Cokemaking

Coke is a solid carbon fuel and carbon source used to melt and reduce iron ore. Coke production begins with pulverized, bituminous coal. The coal is fed into a coke oven which is sealed and heated to very high temperatures for 14 to 36 hours. Coke is produced in batch processes, with multiple coke ovens operating simultaneously.

Heat is frequently transfered from one oven to another to reduce energy requirements. After the coke is finished, it is moved to a quenching tower where it is cooled with water spray. Once cooled, the coke is moved directly to an iron melting furnace or into storage for future use.

Ironmaking

During ironmaking, iron ore, coke, heated air and limestone or other fluxes are fed into a blast furnace. The heated air causes the coke combustion, which provides the heat and carbon sources for iron production. Limestone or other fluxes may be added to react with and remove the acidic impurities, called slag, from the molten iron. The limestone-impurities mixtures float to the top of the molten iron and are skimmed off, see Figure 1, after melting is complete.

Sintering products may also be added to the furnace. Sintering is a process in which solid wastes are combined into a porous mass that can then be added to the blast furnace. These wastes include iron ore fines, pollution control dust, coke breeze, water treatment plant sludge, and flux. Sintering plants help reduce solid waste by combusting waste products and capturing trace iron present in the mixture. Sintering plants are not used at all steel production facilities.

Steelmaking with the Basic Oxide Furnace (BOF)

Molten iron from the blast furnace is sent to a basic oxide furnace, which is used for the final refinement of the iron into steel (Figure 1). High purity oxygen is blown into the furnace and combusts carbon and silicon in the molten iron. The basic oxide furnace is fed with fluxes to remove any final impurities. Alloy materials may be added to enhance the characteristics of the steel.

The resulting steel is most often cast into slabs, beams or billets (USEPA, 1995). Further shaping of the metal may be done at steel foundries, which remelt the steel and pour it into molds, or at rolling facilities, depending on the desired final shape.

BOF Pollution Sources and Prevention Opportunities

Different types of pollution result from the different steps in steel production. Below, the pollution sources and the possible pollution prevention opportunities are discussed for each process.

Pollution Sources and Prevention for Cokemaking

Coke production is one of the major pollution sources from steel production. Air emissions such as coke oven gas, naphthalene, ammonium compounds, crude light oil, sulfur and coke dust are released from coke ovens. Emissions control equipment can be used to capture some of the gases. Some of the heat can be captured for reuse in other heating processes. Other gases may escape into the atmosphere.

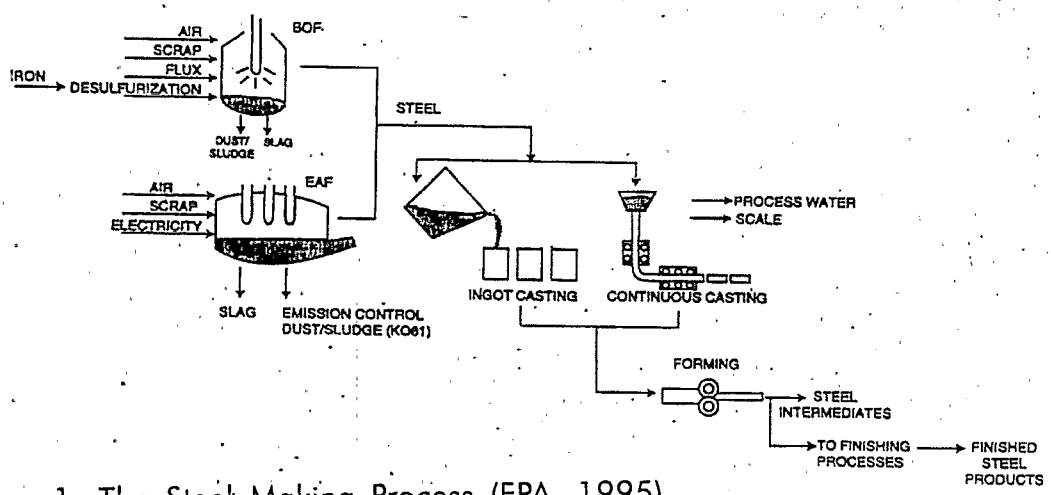

Figure 1: The Steel Making Process (EPA, 1995)

Water pollution comes from the water used to cool coke after it has finished baking. Quenching water becomes contaminated with coke breezes and other compounds. While the volume of contaminated water can be great, quenching water is fairly easy to reuse. Coke breezes and other solids can usually be removed by filtration. The resulting water can be reused in other manufacturing processes or released.

Reducing Coke Oven Emissions

Pollution associated with coke production is best reduced by decreasing the amount of coke used in the iron melting process. The smaller the volume of coke produced, the smaller the volume of air and water emissions. However, process modifications in actual coke production are not widely available and are very expensive.

One fairly economical method of reducing coke oven pollution is to reduce the levels of coke used in blast furnaces. A portion of the coke can be replaced with other fossil fuels without retrofitting the furnace. Pulverized coal can be substituted for coke at nearly a 1:1 and can replace 25 - 40% of coke traditionally used in furnaces (USEPA, 1995). Pulverized coal injection is used worldwide to reduce coke use and, thus, coke emissions (Chatterjee, 1995).

Pulverized coal injection may affect the final steel products. Pulverized coal may reduce gas permeability of the metal and unburnt coal particles may accumulate in the furnace, decreasing efficiency. Thus, it may not be possible to substitute pulverized coal for coke in the production of high quality steel.

Other alternative fuels such as natural gas, oil or tar/pitch can be used to replace coke using similar process modifications. The reduction in emissions is proportional to the reduction in coke use.

Air and water emissions may also be reduced by using a non-recovery coke battery. In traditional plants, by-products are recovered from the blast furnace. In non-recovery batteries, coke oven slag and other by-products are sent to the battery where they are combusted. This technique consumes the by-products, eliminating much of the air and water pollution. Non-recovery coke batteries do require replacement or retrofitting of traditional coke ovens. This process modification does reduce pollution, but can be expensive.

A third method for reducing coke oven emissions is the Davy Still Autoprocess. The process uses water to remove ammonia and hydrogen sulfide from coke oven emissions prior to cleaning of the oven.

Cokeless Ironmaking

Cokeless ironmaking procedures are currently being studied and, in some places, implemented. One such procedure is the Japanese Direct Iron Ore Smelting (DIOS) process (Figure 2). The DIOS process produces molten iron from coal and previously melted ores. In this process, coal and other ores can produce enough heat to melt ore, replacing coke completely (USEPA, 1995).

In addition to reducing coke use, the DIOS process could cut the costs of molten iron production by about 10%, reduce emissions of carbon dioxide by 5 - 10% and increase flexibility by improving the starting and stopping capabilities of the steel mill (Furukawa, 1994). However, the DIOS process remain very expensive and requires extensive process modification. In 1995, this method was still being tested and economic feasibility will be determined from those tests.

The HISmelt process, named after the HISmelt Corporation of Australia, is another cokeless iron melting process being tested. In this process, ore fines and coal are manipulated to melt iron ore. In 1993, the process could produce eight tons of iron ore per hour using ore directly in the smelter. Process modifications are expected to increase the efficiency to 14 tons per hour. Commercial feasibility studies were performed in 1995. Midrex is expected to be the U.S. distributor of the process.

A final cokeless iron melting process is the Corex or Cipcor Process. This process also manipulates coke to produce the heat required to melt iron. A Corex plant is operational in South Africa. Posco of Korea has a Corex plant operating at 70% capacity in 1996 and is expected to continue progress (Ritt, 1996). India is also expected to build a plant in 1997. The process integrates coal

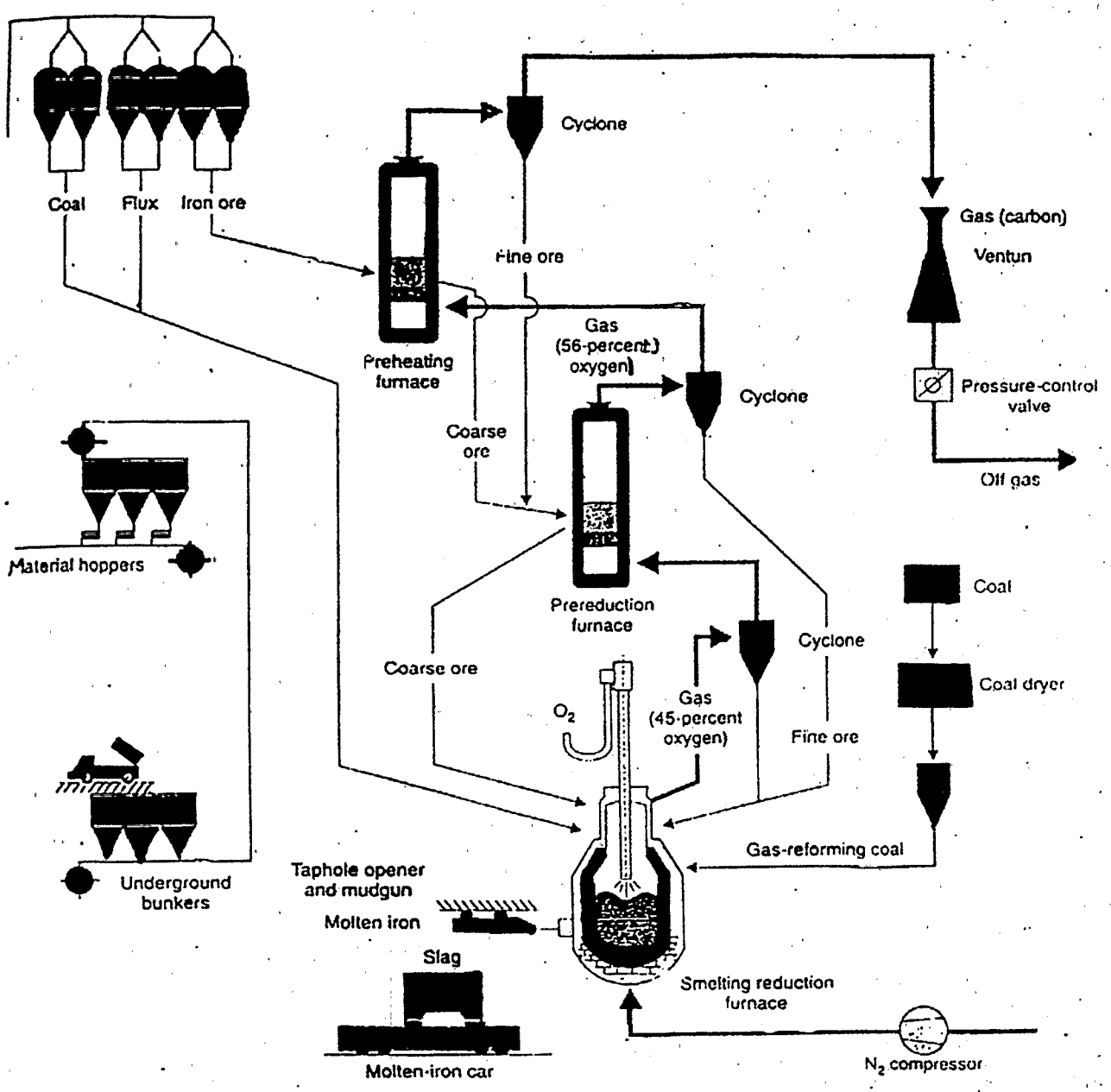

Figure 2. The DIOS Process (Furukawa, 1994)

desulfurization, has flexible coal-type requirements, and generates excess electricity that can be sold to power grids (USEPA, 1995). Further testing is being conducted to determine actual commercial feasibility in the U.S.

Iron Carbide Steel Production Plants

Iron carbide production plants can be an alternative to the Basic Oxide Furnace. These plants use iron carbide, an iron ore that contains 6% carbon rather than 1.5-1.8% of regular iron ore. The additional carbon ignites in the presence of oxygen and contributes heat to the iron melting process, reducing energy requirements (Ritt, 1996). While these types of plants do not reduce pollution on site, they do reduce the electricity requirement for steel production, reducing polution from the power plant.

Pollution Sources and Prevention in Ironmaking

Slag, the limestone and iron ore impurities collected at the top of the molten iron, make up the largest portion of ironmaking by-products. Sulfur dioxide and hydrogen sulfide are volatized and captured in air emissions control equipment and the residual slag is sold to the construction industry. While this is not a pollution prevention technique, the solid waste does not reach landfills.

Blast furnace flue gas is also generated during ironmaking. This gas is cleaned to remove particulates and other compounds, allowing it to be reused as heat for coke furnaces or other processes. Cleaning gas for reuse can produce some air pollution control dust and water treatment plant sludge, depending on the method used. The dust can be reused in sintering processes or landfilled.

Pollution Sources and Prevention in the BOF

Slag is a major component of the waste produced in BOFs. Because of its composition, this slag, unlike that from the blast furnace, is best used as an additive in the sintering process. As its metallic content is lower, it does not make a good raw material for the construction industry.

Hot gases are also produced by the BOF. Furnaces are equipped with air pollution control equipment that contains and cools the gas. The gas is quenched and cooled using water and cleaned of suspended solids and metals. This process produces air pollution control dust and water treatment plant sludge.

Steel Production from Scrap Metals

Steelmaking from scrap metals involves melting scrap metal, removing impurities and casting it into the desired shapes. Electric arc furnaces (EAF) are often used (Figure 1). The EAFs melt scrap metal in the presence of electric energy and oxygen. The process does not require the three step refinement as needed to produce steel from ore. Production of steel from scrap can also be economical on a much smaller scale. Frequently mills producing steel with EAF technology are called mini-mills.

Pollution Sources and Material Recovery

Gaseous emissions and metal dust are the most prominent sources of waste from electric arc furnaces. Gaseous emissions are collected and cleaned, producing EAF dust or sludge. The remaining gas contains small quantities of nitrogen oxide and ozone and is usually released. The EAF dust or sludge composition varies depending on the type of steel being manufactured. Common components include iron and iron oxides, flux, zinc, chromium, nickel oxide and other metals used for alloys. If the dust or sludge contains lead or cadmium, it is listed as a hazardous waste (RCRA K061) (USEPA, 1995).

In 1996, 500kg of EAF dust were produced for each tonne[1] of crude steel production. In the United Kingdom, 70% of that dust is sold to other companies, 20% is recycled in-plant and 10% is landfilled. Although it is a relatively small proportion of the total volume of waste, the landfilled EAF dust amounts to 50 kg per tonne of crude steel produced (Strohmeier, 1996).

Recycling and recovery of EAF dust can be difficult because of the alkalinity and heavy metal (zinc and lead) content. The dust can be landfilled, but, because of the fine nature, it may

leach into ground water. Several processes have been developed to recover the zinc, lead and other heavy metals from EAF dust. Although not pollution prevention, metal recovery is almost always profitable if the zinc content of the dust is 15 - 20% of the total volume. It can be marginally profitable with lower levels of zinc. Other metals such as chromium and nickel can also be reclaimed and sold.

After the heavy metals have been removed, the dust is composed primarily of iron and iron oxides and may be remelted. If the metal content is sufficient, the dust can be reused in the blast furnaces. If it is not sufficient, the dust can be sold to other industries for use as raw materials in bricks, cement, sandblasting or fertilizers.

Energy Optimizing Furnaces (EOF)

EOF was developed to replace the electric arc and other steelmaking furnaces. The EOF is an oxygen steelmaking process. Carbon and oxygen react to preheat scrap metal, hot metal and/or pig iron. These furnaces reduce capital and conversion costs, energy consumption and environmental pollution, while increasing input flexibility (Chattergee, 1995).

Steel Forming and Finishing

After the molten metal is released from either the BOF, EAF or EOV, it must be formed into its final shape and finished to prevent corrosion. Traditionally, steel was poured into convenient shapes called ingots and stored until further shaping was needed. Current practices favor continuous casting methods, where the steel is poured directly into semi-finished shapes. Continuous casting saves time by reducing the steps required to produce the desired shape.

After the steel has cooled in its mold, as further detailed in Chapter 3, continued shaping is done with hot or cold forming. Hot forming is used to make slabs, strips, bars or plates from the steel. Heated steel is passed between two rollers until it reaches the desired thickness.

Cold forming is used to produce wires, tubes, sheets and strips. In this process the steel is passed between two rollers, without being heated, to reduce the thickness. The steel is then heated in an annealing furnace to improve the ductile properties. Cold rolling is more time consuming, but is used because the products have better mechanical properties, better machinability, and can more easily be manipulated into special sizes and thinner gauges.

After rolling is completed, the steel pieces are finished to prevent corrosion and improve properties of the metal. The finishing process is detailed in *the Pollution Prevention and the Metal Finishing Industry* manual.

Pollution Sources and Prevention from Steel Forming

The primary wastes produced in the metal forming process include contact water, oil, grease, and mill scale. All are collected in holding tanks. The scale settles out and is removed. It can be reused in sintering plants or, if the metal content is sufficient, may be sold as a raw material elsewhere. The remaining liquid leaves the process as waste treatment plant sludge. As the waste results in a small portion of pollution produced by steelmaking, pollution prevention and process modification opportunities are not a priority.

References

Chatterjee, Amit. "Recent Developments in Ironmaking and Steelmaking." *Iron and Steelmaking*. 22:2 (1995), pp. 100-104.

Frukawa, Tsukasa. "5000 Daily Tons of Direct Iron-Ore Smelting by 2000." *New Steel*. 10:11 (November, 1994), pp. 36-38.

McManus, George, ed. "Replacing Coke With Pulverized Coal." *New Steel*. 10:6 (June, 1994), pp. 40-42.

Ritt, Adam. "DRI comes to the Gulf Coast." *New Steel*. January, 1996, pp. 54-58.

Strohmeier, Gerolf, and John Bonestell. "Steelworks Residues and the Waelz Kiln Treatment of Electric Arc Furnace Dust." *Iron and Steel Engineering*. April, 1996, pp. 87-90.

U.S. Department of Commerce. *1992 Census of Manufacturers — Blast Furnaces, Steel Works*

and Rolling and Finishing Mills. 1992.

USEPA. "Profile of the Iron and Steel Industry." EPA/310-R-95-010, U.S. Environmental Protection Agency. Washington, D.C., September 1995.

Annotated Bibliography

Andres, A. and J.A. Irabien. "The Influence of Binder / Waste Ratio on Leaching Characteristics of Solidified / Stabilized Steel Foundry Dust." *Environmental Technology*. 15 (1994), pp. 343-351. This article discusses effective methods for steel dust stabilization.

Andres, A., et al. "Long-term Behavior of Toxic Metals in Stabilized Steel Foundry Dust." *Journal of Hazardous Waste Materials*. 40 (1995): pp. 31-42. This study describes the leaching properties of heavy metals in steel dust.

Berry, Brian. "Hoogovens Means Blast Furnaces — And Clean Air." *New Steel*. December, 1994. pp. 26-30. Pulverized coal injection, particularly in Holland, are discussed.

McManus, G.J. "The Direct Approach to Making Iron." *Iron Age*. July, 1993. pp. 20-23. Direct ironmaking, Corex plants and other alternatives to the BOF are discussed.

Mohla, Prem. "New Ductile Iron Process Meets the Challenge of the 1990's Head On." *Foundry Management and Technology*. 121:4 (April, 1993), pp. 52-56. Discusses alternative production processes to help reduce pollution.

Schriefer, John. "Hot Iron Without Coke - And Blast Furnaces." *New Steel*. August, 1995, pp. 50-52. Corex, direct iron-ore smelting and HISmelt processes are all alternatives to the coke oven and blast furnace. Examples are discussed in this article.

[1]UK weight measurements

Case Study

Metal Recovery from Electric Arc Furnace Dust
Case Study: CS616
North Carolina Department of Natural Resources and Community Development, July, 1989

The Florida Steel Company of Charlotte, North Carolina produces significant amounts of baghouse dust with a high zinc from their steel smelting operations. The air pollution control system on their electric arc furnaces capture the zinc-rich dust. Rather than disposal, the furnace dust is sent directly to a zinc smelter for metal recovery.

At this writing, 2700 tons per year were sent to the zinc smelter for recovery at a cost of $61 per ton. By allowing the zinc to be reused, Florida Steel saves $130,000 per year over the cost of landfilling.

3 Ferrous and Non-Ferrous Foundries

Ferrous and non-ferrous foundries specialize in melting and casting metal into desired shapes. Foundry products are most often used in automobiles, plumbing fixtures, train locomotives, airplanes and as metal pieces in other kinds of equipment. Independent foundries are classified under SIC code 3300; however, many specialty or smaller production foundries often operate within larger plants classified under other SIC codes.

In 1990, iron and steel accounted for 84% of metals cast (McKinley, 1994). The remaining 15% of foundry operations come from aluminum, copper, zinc and lead production. The foundry industry currently produces 11 million tons of metal product per year, with a shipment value of $19 billion. Almost 200,000 people are employed in over 3,000 foundries in the United States. Although the large iron and steel foundries produce billions of dollars in metal each year and provide many jobs, most foundries have far smaller budgets and employ less than 100 people.

Foundry Processes

Cast Making

The first step in metal casting (Figure 3) involves the creation of a mold into which the molten metal will be poured and cooled. The materials used to make the molds depend on the type of metal being cast and the desired shape of the final product. Sand is the most common molding material; however, metals, investment materials, and other compounds may also be used.

Green sand mold are used in 85% of foundries. Green sand is a mixture of sand, clay, carbonaceous material and water (Figure 4). The sand provides the structure for the mold, the clay binds the sand together and the carbonaceous materials prevent rust. Water is used to activate the clay. The green sand mixture is packed around a

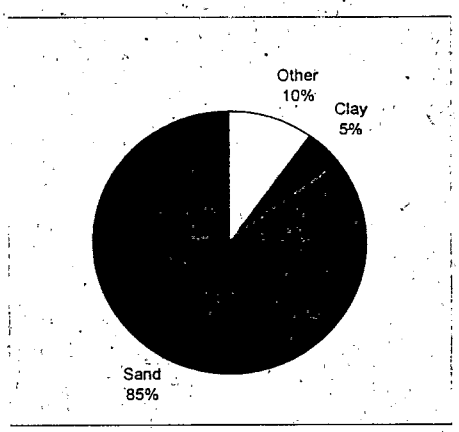

Figure 4. Green Sand Composition

pattern of the metal piece and allowed to harden. The mold is carefully removed from the pattern and prepared for the molten metal.

Sand molds are used only once. Molten metal is poured into the mold and allowed to cool. After cooling, the mold is broken away from the metal piece in a process called shakeout. Most of the sand from green sand molds is reused to make future molds.

Sand mixtures are also often used to create cores. Cores are pieces that fit into the mold to create detailed internal passages in the metal piece. Cores must be strong and hard to withstand the molten metal, and collapsible so they can be removed from the metal piece after it has cooled. To obtain these properties, resins or chemical binders are usually added to sand mixtures. Depending on the binder used, molds may be either air or thermally set.

Other molding materials include chemically bonded sand, metal or refractories. These materials are used in the remaining 15% of foundry applications. Shell molds use chemically bonded sand to make the molds. Permanent metal molds may be used in foundries that

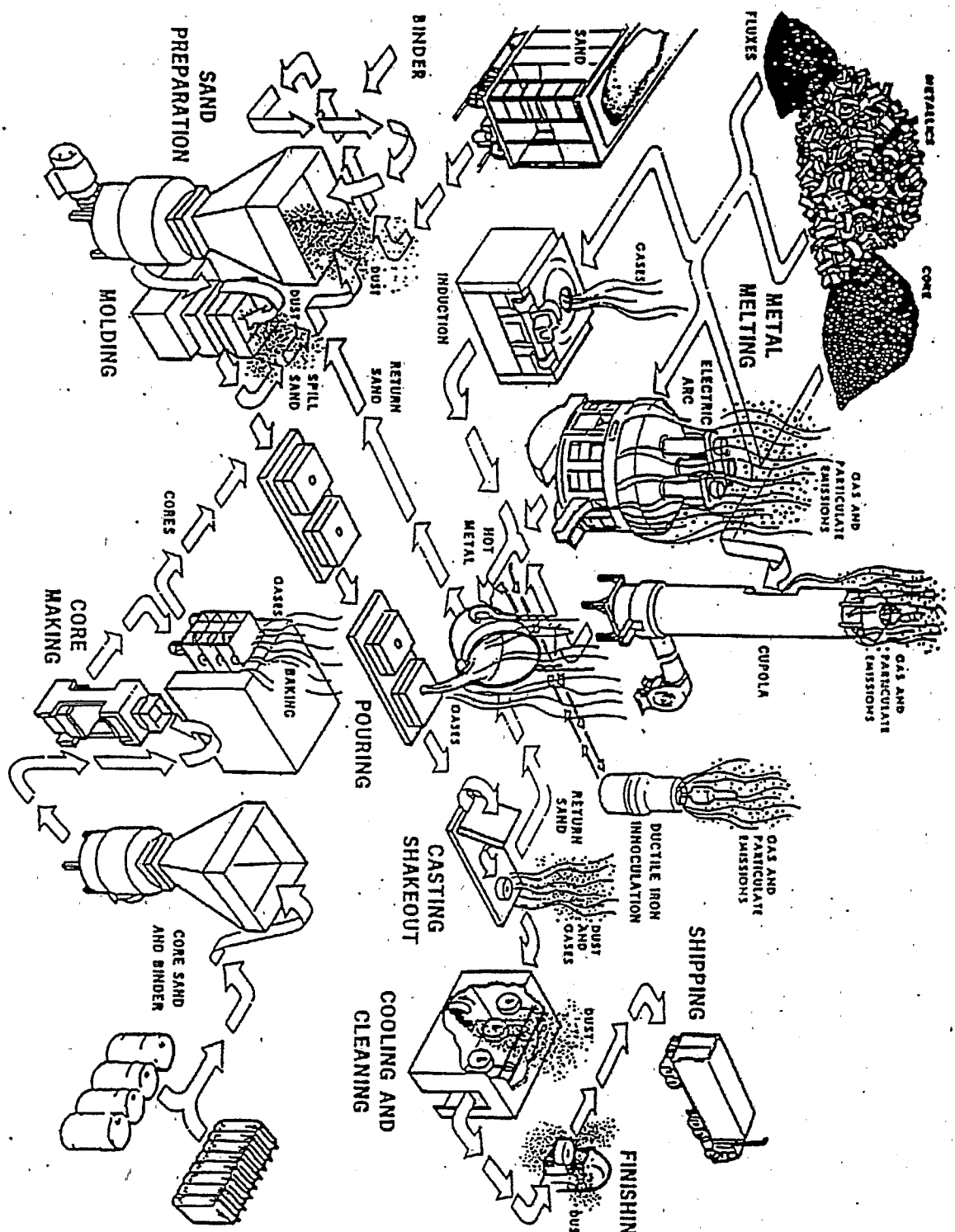

Figure 3. Metal Casting Process (USEPA, 1981)

produce large quantities of the same piece. Investment molds are made from ceramic substances called refractories. They are used in high precision metal castings.

Metal Melting

Foundries melt metals in one of several types of furnaces depending on the type of metal being used (Table 1). Furnaces types include cupolas, electric arc, induction, hearth or reverberatory and crucible. Because of the different nature of metals, different inputs are required and different pollution is released from each type.

Cupola Furnaces

Cupola furnaces are the oldest type of furnaces used in foundries. They are tall and roughly cylindrical and are most often used for melting iron and ferro alloys.. Alternating layers of metal and ferro alloys, coke, and limestone are fed into the furnace from the top. Coke makes up 8 - 16% of the total charge to provide the heat that melts the metal (USEPA, 1992). Limestone is added to react with impurities in the metal and floats to the top of the metal as it melts. As in steel melting, this limestone/impurities combination is called slag. By floating on top of the metal while it melts, the slag protects the metal from oxidation.

Cupola furnaces are lined with refractories, or hard, heat resistant substances such as fire clay, bricks or blocks. The refractory protects the furnace shell from abrasion, heat and oxidation. Over time the refractory breaks down and eventually becomes part of the slag.

Cupola furnaces are usually attached to emissions control systems to capture air emissions. Usually, the air emission systems use either high energy wet scrubbers that use water to remove air pollution from the gas stream or dry baghouse systems that use fabric filters to capture the emissions.

Furnace Type	Raw Materials	Outputs	Process
Cupola Furnace	Iron ore, scrap iron, lime, coke	Molten iron	Alternative layers of metal and coke are fed into the top of the furnace. The metal is melted by the hot gasses from the coke combustion. Impurities react with the lime and are separated.
Electric Arc Furnace	Scrap iron, flux	Molten iron and steel	Electric arcs from carbon electrodes melt the scrap metal. The flux reacts with impurities.
Induction Furnace	Scrap iron or non-ferrous metals	Molten iron or non-ferrous metals	Induction furnaces are the most common type used by both ferrous and non-ferrous foundries. Copper coils heat the metal using alternating currents. The flux reacts with impurities.
Reverberatory, Hearth, or Crucible Furnace	Non-ferrous metals, flux	Molten non-ferrous metals	Reverberatory furnaces melt metals in batches using a pot-shaped crucible that holds the metal over an electric heater or fuel-free burner. The flux reacts with impurities

Table 1. Common Types of Metal Melting Furnaces

Electric Arc Furnaces

Electric arc furnaces are often used in large steel foundries and steel mills. The metal is charged into the furnace, with additives to make recovery of slag easier, and heat to melt the metal is produced with an electric arc from three carbon or granite electrodes. The electric arc furnace is lined with refractories which slowly decompose and are removed with slag. Electric arc furnaces also usually employ air emissions equipment to capture most air pollution.

Induction Furnaces

Induction furnaces are the most widely used type of furnace for melting iron and are increasingly popular for melting non-ferrous metals (USEPA, 1992). They are popular because they provide excellent metallurgical control and are relatively pollution free. Coreless induction furnaces are used for smaller (5-10 ton) operations. In coreless induction furnaces, refractory lined crucibles are surrounded by water-cooled, copper coils.

For larger quantities, channel induction furnaces are used. In these furnaces the copper coils are surrounded by inductors to promote metal melting. Channel furnaces are commonly used to hold the molten metal prior to casting.

Induction furnaces use alternating currents to create heat and melt the metal. The refractories are usually made of silica, alumina or magnesia. They break down over time and become part of the slag.

Reverberatory or Hearth Furnaces

Hearth furnaces are used in batch melting of non-ferrous metals. The hearth can be heated by either electric or natural gas methods. Hearth furnaces are used to produce small quantities of metal, usually for art and similar industries.

Metal Casting

After metal has been melted, it is poured into a mold and allowed to cool. To remove the mold, sand castings enter a process called shakeout where the sand mold is shaken from the metal piece. During the process dust and smoke are collected by dust control equipment. Permanent molds are pried from the metal pieces without being destroyed. Investment molds and shell molds are destroyed during removal, creating solid waste.

Any additional parts used to hold the piece during casting are removed. The metal piece is cleaned using steel shot, grit or other mechanical cleaners to remove any remaining casting sand, metal flash or oxide.

A surface coating may be applied to the metal piece at the foundry; however, such coating is usually done at metal finishing plants. Further discussion of metal finishing can be found in *The Pollution Prevention for the Metal Finishing Industry.*

Foundry Waste Streams

The waste products produced by foundries directly relate to the metal type, the furnace type and the molding technology used. For example, foundries that use sand molds generate the most waste from sand. Nonferrous foundries and steel foundries may produce hazardous waste because of the lead, zinc, cadmium and other metal present in the waste. Cupola furnaces produce more air pollution than induction furnaces due to coke use and sand castings produce more solid waste than permanent molds because of the sand fines that cannot be reused.

By volume, gaseous waste is the largest waste source from foundries (Dieter, 1995). Air emissions come from the binder systems used in mold making, the vapors from metal melting and airborne sand used in the pouring and shakeout steps. Air emissions have not been well quantified; however, they generally contain metals, semi-volatile and volatile organic compounds. They mainly come from the melting procedures. Pouring and cooling steps contribute about 16% of the total organic and semi-volatile wastes from foundries (Shah, 1995).

Most of the gaseous metal emissions are captured in the emissions control systems attached to furnaces, shakeout and cleaning areas of the foundry. Cupola furnaces contributed more metallic air emissions than other furnace types. Metal emissions from induction furnaces are very small. The core and mold making processes

produce almost insignificant levels of metal emissions. Emissions from the pouring process depend on the metal temperature. The hotter the metals, the more metal emissions (Shah, 1995).

Organic air emissions come largely from unreacted components of resins, solvents and catalysts. They come primarily from the core and mold making steps and are not well quantified (Shah, 1995). OSHA standards have been the primary reason for monitoring air emissions in the past. However, with the Clean Air Act and its amendments as well as increasing regulations from the EPA, more air emissions studies are being done.

Liquid Emissions

Liquid pollution makes up a small portion of the total waste stream from foundries (Dieter, 1995). Liquid waste comes from non-contact cooling water used to cool metal and other work pieces or from wet scrubber air emission systems. Water runoff from floor cleaning and other maintenance procedures may also produce liquid waste. However, volumes of liquid waste are relatively small and do not pose a large pollution problem for foundries. Some plants have water treatment facilities to remove contaminants for water reuse.

Solid Waste

Solid waste makes up a large portion of the pollution from foundries. One-quarter to one ton of solid waste per one ton of castings is expected (Shah, 1995). The waste comes from sand, slag, emissions control dust and spent refractories. Sand waste from foundries using sand molds has been identified as the most pressing waste problem in foundries (Twarog, 1992). Molding and core sand make up 66-88% of the total waste from ferrous foundries (USEPA, 1992).

Sand Waste

Green foundry sand is routinely reused. After the sand is removed from the metal piece, it can easily be remolded. However, sand fines develop with reuse. These particles are too small to be effective in molds and have to be removed and often landfilled.

Sand that is chemically bound to make cores or shell molds is more difficult to reuse effectively and may be landfilled after a single use. Sand recovery methods, as discussed later, have been investigated with mixed results.

Sand wastes from brass and bronze foundries pose further waste problems as they are often hazardous. Lead, copper, nickel, and zinc may be found in the sand in sufficient levels to require further treatment before disposal. If metal levels are sufficent, recovery methods may be employed.

Investment Casting Waste

Although investment castings are not as widely used as sand castings, they also produce solid waste, as they are usually destroyed when removed from a work piece. Spent molds are non-hazardous unless heavy metal alloy constituents are present. Spent wax, used as patterns for the molds, also contribute to solid waste. The patterns are removed by melting the wax and can usually be reused.

Cleaning Room Waste

Finished metal pieces are often cleaned in abrasion cleaning systems. The abrasive cleaners and the sand they remove from the metal pieces contribute to solid waste. Grinding wheels and floor sweepings also add solid waste. These wastes are collected and usually landfilled.

Air Emissions Control Systems

Baghouse air emission control systems are one of the most frequently used technology for controling air emissions in foundries. Air is pumped into the baghouse where particulates accumulate on a fabric filter. The system is efficient for removing particles above or below 0.1 - 0.3 micrometers (Shah, 1995). Other types of air emissions control systems may also be used including wet scrubbers, absorption and adsorption systems, combustion and electrostatic precipitation. All systems produce a solid waste from the air emissions and release the cleaned air.

The emissions control dust is collected at almost all stages of foundry production. If it does not contain hazardous wastes, it is usually landfilled. However, steel foundries frequently produce emissions control dust that contains zinc, lead, nickel, cadmium, and chromium, depending on

the metal content. Nonferrous emissions control dust may also be classified as hazardous due to copper, aluminum, lead, tin and zinc. Depending on the metals content in the emissions control dust it may be permitted for land fill, or it may require further treatment before disposal. Nonferrous foundry dust often contains sufficient levels of metals to make metal recovery economically favorable.

Slag Wastes

Slag waste is often very complex chemically and contains a variety of contaminants from the scrap metals. Common components include metal oxides, melted refractories, sand, and coke ash (if coke is used). Fluxes may also be added to help remove the slag from the furnace. Slag may be hazardous if it contains lead, cadmium, or chromium from steel or nonferrous metals melting. Iron foundry slag may be highly reactive if calcium carbide is used to desulfurize the iron. Special handling is required for highly reactive waste.

Pollution Prevention Methods for Foundries

Sand Reclamation

Green sand can be reused multiple times without significant refinement. The sand is filtered to remove fines that develop from the process. Additional sand is added to account for sand that is lost. Then the sand is remolded for a different metal piece.

Chemically bound sand used for core making and other types of molds is not so easily reused. However, many methods have been developed to recover foundry sand, with mixed success. The object of sand reclamation is to remove residual binders and contaminants from the sand grains so the sand can be reused without affecting the quality of the mold. The sand reclamation process is defined by the American Foundrymen's Society Sand Reclamation and Recovery Committee as "the physical, chemical or thermal treatment of a refractory aggregate to allow its reuse without significantly lowering its original useful properties as required for the application involved."

Four methods for recovering sand have been developed. The method that will be useful depends largely on the type of metal cast, the binders used, and the desired reuse.

Attrition Sand Reclamation

Attrition sand reclamation technology spins two streams of sand in opposite directions in the presence of heat. The combination of sand abrasion and binder combustion free the sand particles from some binders. Attrition cannot remove all residual binders, but works well with no-bake binders. The yield from this process is a high strength recycled sand.

Because all binders cannot be removed through attrition, the sand characteristics may be changed. For some casting operations the characteristics may be changed significantly enough that the sand may be be ineffective for furture castings.

Attrition methods of sand reclamation may also produce large quantities of dust. The dust can be captured in air emission control equipment, hence contributing to the total volume of solid waste.

Dry Sand Reclamation

Dry sand reclamation relies on mechanical and pneumatic scrubbers to remove lumps and binders from sand (Figure 5). Mechanical scrubbing moves each sand grain through a sand-to-metal or sand-to-sand interface to remove impurities. Pneumatic scrubbers use air to propel sand between baffles. These scrubbers are particularly good for removing clay from molding sands and binders in systems that are not baked.

Dry reclamation can produce large quantities of dust. These air emissions have to be monitored and captured by control equipment. Dry sand reclamation may also not be capable of removing binders to the extent necessary for reuse in some foundry operations.

Water (Wet) Reclamation

Wet reclamation uses water to remove sand binders (Figure 6). The process uses on the

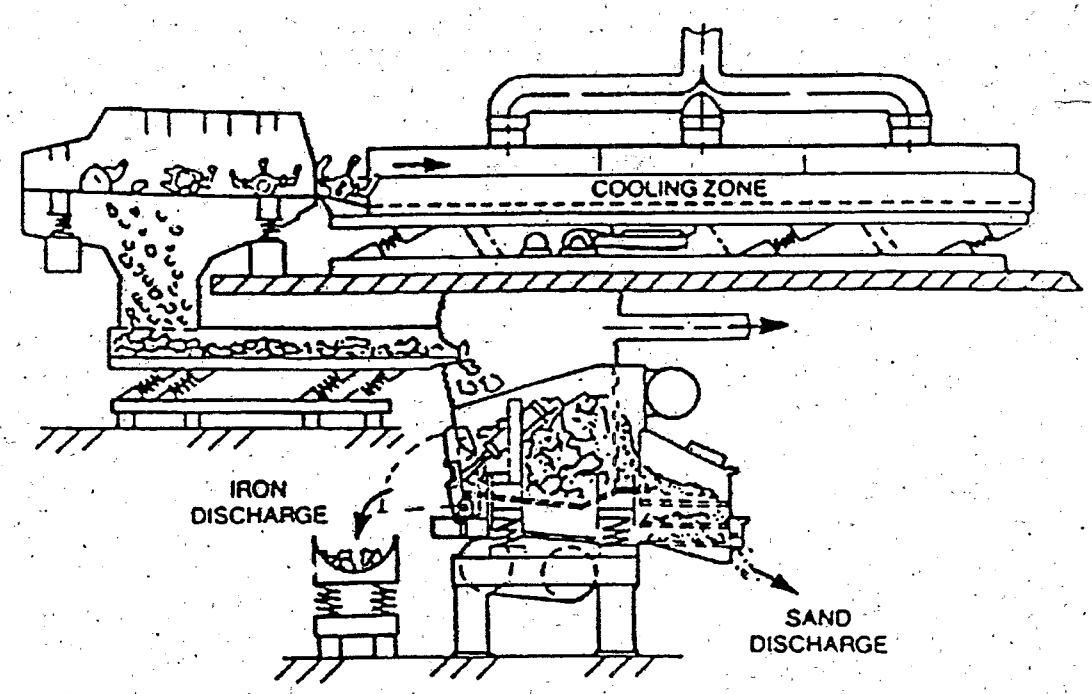

Figure 5. Dry Sand Reclamation (Heine, 1983)

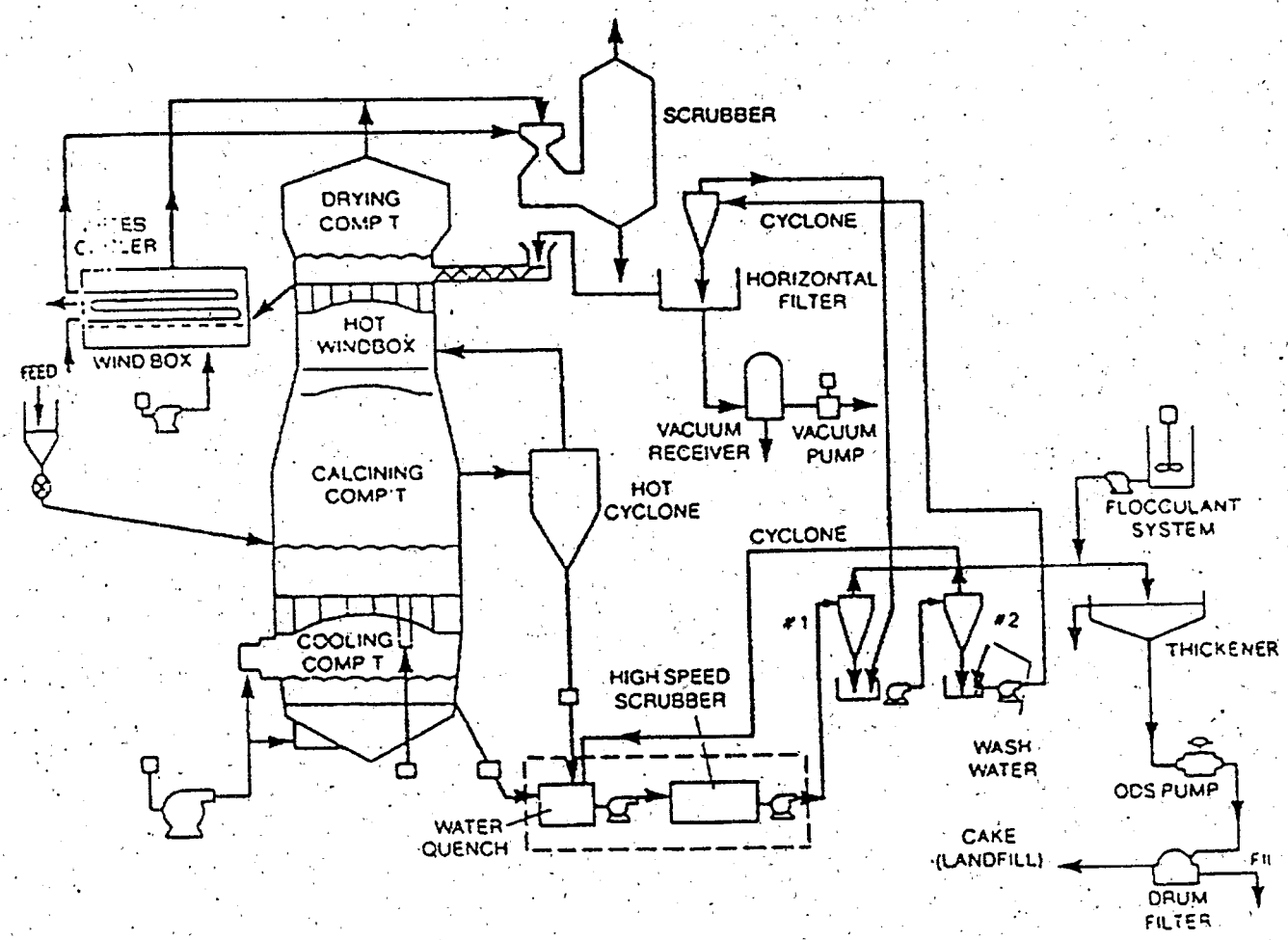

Figure 6. Wet Sand Reclamation (Heine, 1983)

different water solubilities of sand and binders to separate the two. Clay bonded systems work well with water reclamation processes because the clays are very soluble in water. Sodium silicate sand binders can also be removed using wet reclamation. The sodium silicate dissolves part of the sand crystal when binding, but can be removed by exposing it to water. After the sand is soaked in a water bath it is dried and reused.

Although wet reclamation was used in the 1950s and 1960s, it has been nearly eliminated as a method of sand recovery. Chemical binders are also no longer sufficiently hydrophilic to dissolve in water. Further, organic resins that do dissolve and other water soluble impurities can cause significant water contamination. The high volume of waste water and strict environmental regulations can make wet sand reclamation too expensive.

Thermal Sand Reclamation

Thermal reclamation uses heat in a rotary kiln, multiple-hearth furnaces, or a fluidized bed to combust binders and contaminants (Figure 7). In removing binders, the process can cause sand to change in composition. Combustion products from the fuel used to heat the sand and thermal cracking of the sand crystals may occur. The resulting sand may be significantly different than the original sand. Depending on the type of casting, thermally treated sand may or may not be usable.

Infrared energy can also be used to thermally treat sand. This method may maintain more of the sands original composition, while still destroying binders. Infrared units, called electric sand reclamation units, are in place in the United Kingdom and Canada ("Navistar Goes Infrared,"

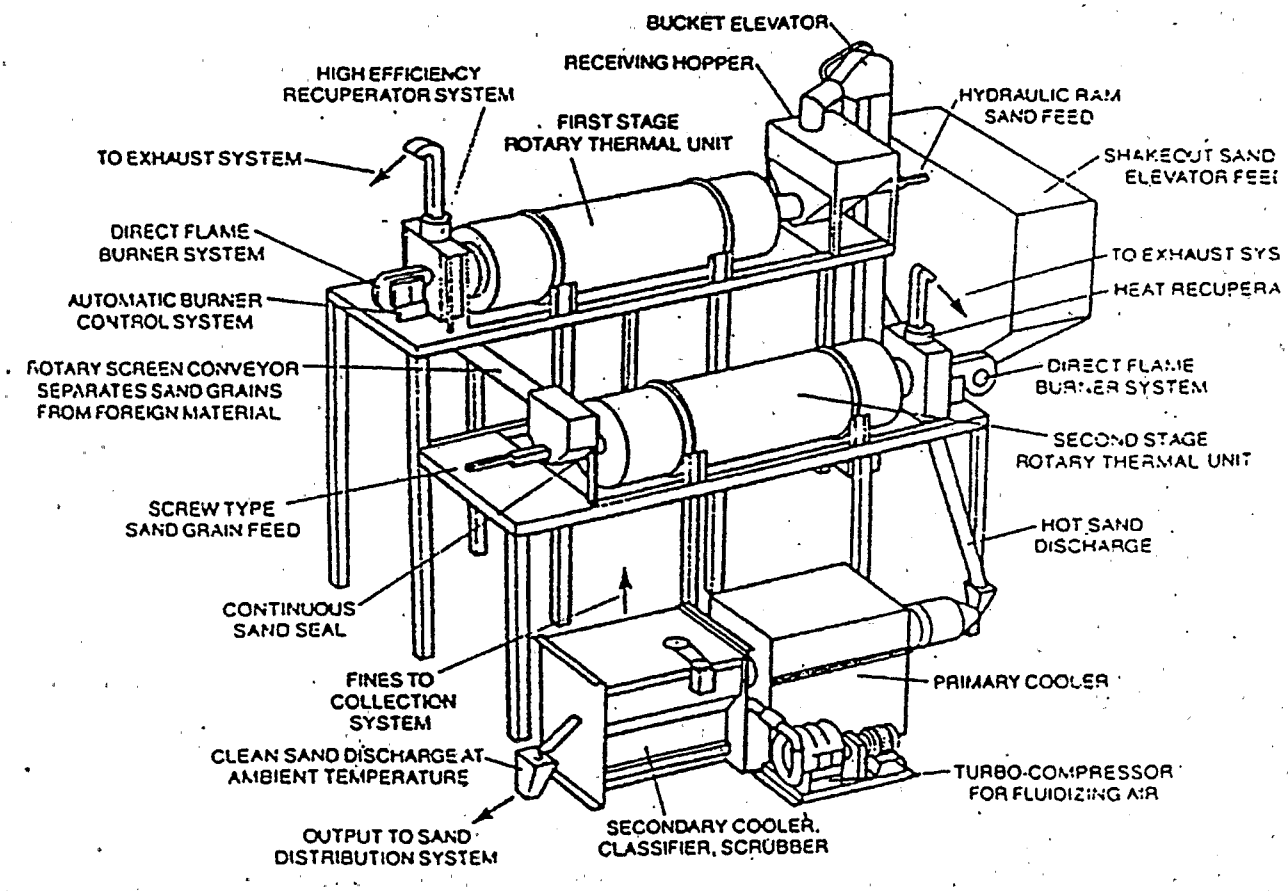

Figure 7. Thermal Sand Reclamation (Heine, 1983)

1993). External blowers push the sand through fluidized beds, allowing the sand to directly contact the infrared radiation which breaks down the binders. The electric sand reclamation units do not produce the combustion products associated with traditional thermal reclamation processes.

Sand Recycling

Another option for foundry sand is recycling. Many industries use sand as a raw material in their processes. As foundry sand is usually not hazardous, it can serve this purpose. Markets for spent foundry sand include manufacturing of: cement, concrete, asphalt, bricks and tiles, flowable fill (permeable, low-strength concrete), geotechnical fill and roadfill, daily landfill cover, and manufactured topsoil and composting. Liability and local legislation must, of course, be considered before selling spent foundry sand.

Spent Slag and Emissions Control Dust

Slag and emissions control dust constitute the remainder of the solid waste produced by foundries. Not much has been written regarding process modification to reduce these solid wastes. However, if the slag or dust contained sufficient metal content, they can be fed back into the furnaces to reclaim the remaining metal dust. The metals can also be recovered from the dust using electrolytic or other metal recovery techniques. The recovered metal can either be added to the molten metal or sold for other uses.

References

Heine, Hans J. "Saving Dollars Through Sand Reclamation — Part 1," *Foundry Management and Technology*. 111:5 (May, 1983), pp. 22-25.

Leidel, Dieter S. "Pollution Prevention and Foundries." *Industrial Pollution Prevention Handbook*, ed. Harry M. Freedman. 1995.

McKinley, M.D. et al. "Waste Management Study of Foundries Major Waste Streams: Phase II." HWRIC #TR-016. April 1994.

Shah, D.B. and A.V. Phadke. "Lead Removal of Foundry Waste By Solvent Extraction." *Journal of Air and Waste Management*. 45 (March, 1995), pp. 150-155.

Trombly, J. "Recasting a Dirty Industry." *Environmental Science and Technology*. 29:1 (1995), pp. 76-78.

Twarog, D.L., et al. "Waste Management Study of Foundries' Major Waste Streams: Phase I." HWRIC Project RRT-16, Waste Management and Research Center, Champaign, Illinois, November, 1992.

USEPA. *Metal Casting and Heat Treating Industry."* EPA/625/R-92/009. September 1992.

Annotated Bibliography

Air Quality Committee (10-E), "Foundries Face Stricter Air Quality, Pollution Monitoring," *Modern Casting*. May 1990. This article provides a good description of SARA Title III.

Cornett, Michael J., "Eliminating the Waste Stream from Your Cold Box Process." *Foundry Management and Technology*. 121:12 (December, 1993), pp. 38-40. Good information about the Isocycle process. Discusses cold box sand casting briefly.

Douglas, John. "Electrifying the Foundry Fire," *EPRI Journal*. October / November 1991, pp. 17-23. This article discusses electric options to replace coal-fired processes.

East, William, "Solid Waste — No Place to Go," *Foundry Management and Technology*. May 1991. This article discusses the sources of solid waste from foundries.

Fuller, Robert, "Toxicity: Characteristics Leaching Procedure Replaces Extraction Procedure Toxicity," *Modern Casting*, 80 (November, 1990), pp. 51-53. Discusses changes in EPA methods for determining toxicity characteristics of industrial waste.

Gschwandtner, Gerhard and Susan Fairchild, *Emissions Factors for Iron Foundries — Criteria and Toxic Pollutants*. EPA-600/2-90-044, US

Environmental Protection Agency, Washington, DC, August, 1990. Discussion of air pollution sources from foundries.

Ham, R.K. and W.C. Boyle. "Research Reveals Characteristics of Ferrous Foundry Wastes," *Modern Casting*. February, 1990, pp. 37-41. Discusses the toxicity of liquid foundry wastes.

Jacobs Engineering. *Waste Audit Study, Thermal Metal Working Industry*, Jacobs Engineering, December, 1990. Discussion of waste streams associated with foundries.

Mosher, Gary E. "EPA Publishes New Land Ban Regulations." *Modern Casting*. 80:1 (January, 1990), pp. 40-41. Discussion of the Hazardous and Solid Waste Amendments of 1984 as they apply to foundries.

National Renewable Energy Laboratories. "The Foundry Industry" In *Technology Partnership*. Washington, DC: Department of Energy. April, 1995. Brief discussion of the industry and the processes. Also a brief discussion of the Metal Casting Competitiveness Research Act of 1990.

Smith, Virginia D. "Foundries and Clean Air Act: Several Unanswered Questions." *Foundry Management and Technology*. 119:2 (February, 1991), 16-18. This article provides a general description of how the Clean Air Act of 1990 will potentially affect the foundry industry.

Summary of Factors Affecting Compliance by Ferrous Foundries, Volume 1, EPA-340/1-80-020, US Environmental Protection Agency, Washington, DC, January, 1981. This article discusses waste sources associated with foundries.

Trombly, Jeanne. "Recasting a Dirty Industry," *Environmental Science and Technology*. 29:2 (1995), pp. 76-78. Discussion of foundry air emissions and the Clean Air Act of 1994.

Case Studies

Air Emissions Reduction

Replacing Organic Cleaners with Citrus Based Solvents
Pollution Prevention Case Study, Enviroene, October 31, 1995

Northern Precision Castings, Geneva, Wisconsin, is an investment casting operation employing 150 people and casting more than 200,000 pounds of metal per month. The operation uses ceramic molds and wax patterns. The wax patterns must be cleaned thoroughly for proper ceramic adhesion. The cleaner used was the solvent 1,1,1-Trichloroethane (TCA) which evapoarted to leave the surface clean. The evaporation produced 18,000 pounds (1988) of emissions.

Environmental regulations pertaining to TCA caused Northern PercisionCasting to consider alternatives. They requested alternatives from their solvent supplier. The supplier's first recommendation was a switch to freon until a better alternative could be identified. The freon produced fewer emission than the than TCP and was used for six to nine months. After that period, freon was replaced with a citrus-based, non-hazardous solvent. The new solvent has been effectively cleaning the wax assemblies with minimal emissions.

Product quality was a concern prior to the cleaning chemical switch. However, the change produced no change in mold quality. Initally, the citrus-based solvent produced an odor the workers found offensive, but the problem has been resolved.

The switch from organic solvent cleaners to a citrus-based cleaner has required no capital cost and no signifacant changes in operations and maintenance costs. The fugitive air emissions prior to the shift were 18,000 pounds (1988). After the move to the citrus-based cleaner, emissions constituted water-soluble liquid waste which can be discharged to the Publicly-Owned Treatment Works (POTW).

Foundry Sand Reclamation

Micigan Department of Commerce and Naturla Resources, November 1993, #9303

Wolverine Bronze or Roseville, Michigan installed a thermal sand recycling system in an attempt to cut costs of sand purchases. The system produced sand quailty adequate to meet the molding needs; however, the system was not economically beneficial. As the sand needs at the facilty varied greatly, use of the machine varied. However, the thermal apparatus required constant heat to provide quick start up without damage to the system. With the heat requirements, the thermal sand recycling operation did not save signficant amounts of money over the purchase of new sand.

In 1989, low enery sand recycling sytems were evaluated to replace the thermal system. An attition sand recovery system was installed. In the attition system, sand grains rub together at high speeds to remove residual binders and inorganic contamiants. The system has produced signifant cost savings over the use of new sand. The primary savings stems from reduced energy and maintenance requirements over the thermal recovery system.

Cupola Slag Reduction

Iowa Waste Reduction Assistance Program, Cast Study #94-20

Quinn Machine and Foundry of Boone, Iowa produces concrete pipe forms our of iron. Slag from the cupola furnace was being produced at a rate of approximately 8,000 pounds per day. Quinn sought to reduce the slag production and, in turn, reduce thier volume of waste. They first attempted to locate a metal recovery operation for the slag. However, metal recovery did not prove economical for the facility.

After further evaluation, it was determined that a smaller charge in the furnace would increase the yield and reduce slag formation. The change has resulted in the predicted reductions. From the changes, landfill costs have been reduced by approximately $1,275 per year.

4 Aluminum Smelting and Refining

Aluminum is primarily used to produce pistons, engine and body parts for cars, beverage cans, doors, siding and aluminum foil. It may also be used as sheet metal, aluminum plate and foil, rods, bars and wire, aircraft components, windows and door frames. The leading users of aluminum include the container and packaging industry, the transportation industry, and the building and construction industry.

Aluminum can either be produced from bauxite ore or from aluminum scrap. Refinement of aluminum ore is sufficiently expensive that the secondary production industry commands much of the market. About 40% of aluminum in the US is recovered for secondary refining (USEPA, 1995).

Due to high energy requirements, the major primary aluminum producers tend to locate in areas with low energy costs, including the Northwest and Ohio River Valley. Secondary producers tend to locate near industrial centers, including southern California and the Great Lakes.

Both primary and secondary aluminum producers refine and melt the aluminum and pour it into bars called ingots. The ingots are shipped to metal casting plants or other shaping plants for molding or rolling.

Primary Aluminum Refining

Aluminum production from bauxite ore is a three step process. First the alumina is extracted from bauxite ore usually using the Bayer Process. In the Bayer Process, finely crushed bauxite is mixed with sodium hydroxide and placed in a 'digester.' High temperatures and pressures in the digester cause reactions in the ore / sodium hydroxide mixture. The result is dissolved aluminum oxide and ore residue. The residues, which include silicon, lead, titanium, and calcium oxides, form a sludge in the bottom of the digester. The aluminum oxide is evaporated off and condensed. Starches and other ingredients are added to remove any remaining impurities from the oxide.

The solution is then moved to a precipitation tank where the aluminum oxide is crystallized. Aluminum hydroxide and sodium hydrizide are the products of the crystallization. The crystals are washed, vacuum dewatered and sent to a calcinator for further dewatering.

Aluminum oxide from the Bayer Process is then reduced to aluminum metal usually using the Hall-Heroult process. In this process the aluminum oxide is placed in a electrolytic cell with molten cryolite. A carbon rod in the cell is charged and the reaction results in carbon monoxide, carbon dioxide and aluminum. The aluminum sinks to the bottom where it is removed from the tank and sent to a melting or holding furnace.

The molten aluminum is then mixed with desired alloys to obtain specific characteristics and cast into ingots for transport to fabricating shops. In the fabrication shops, the molten aluminum or aluminum alloys are remelted and poured into casts and cooled. Molten aluminum may be further heated to remove oxides, impurities and other active metals such as sodium and magnesium, before casting. Chlorine may also be bubbled through the molten aluminum to further remove impurities.

Waste Sources and Pollution Prevention Opportunities

Air emissions come from a number of sources. The grinding of the bauxite, calcinating the aluminum oxide, and handling materials produce particulates. Air emissions equipment is used extensively to capture these particulates.

The particulates may be metal rich. If the metallic content is sufficient, the emissions control dust can be remelted to capture any remaining metals or it may be otherwise reused or sold for its metallic content. If the dust is not sufficiently metal rich, it usually landfilled.

Another source of air emissions from primary aluminum production processes occurs during the reduction of aluminum oxide to aluminum metal. Hydrogen fluoride gases and particulates, fluorides, alumina, carbon monoxide, sulfur dioxide and volatile organics are produced. Electrolytic baths often use anode pastes in the cell. The paste must be continually fed into the cell through a steel sheet with an opening. This continual feed allows the gas to escape.

One method for reducing gas emissions is the use of pre-baked anodes. Pre-baked anodes must be manufactured in an on-site plant. The pre-baked anodes allow the electrolytic bath to be sealed, allowing gas to be captured. The anodes are then replaced every 14-20 days, containing the gasses for collection. Anode baking furnaces produce fluorides, vaporized organics and sulfur dioxide emissions. The emissions are often controlled using wet scrubbers.

Liquid waste is not a great concern in aluminum processing. Wastewater is produced during clarification and precipitation; however, much of the water is directly reused.

Solid phase wastes include bauxite refining waste, called red mud, and reduction waste from spent pot liners. Red mud contains iron, aluminum, silica, calcium and sodium, depending on the ore used. Usually red mud is managed on site and is not hazardous.

The refractory lining from the pots used to refine the aluminum are the other solid waste concern. The refractory breaks down with continuous use to produce RCRA K088 hazardous waste.

Secondary Aluminum Production

In the secondary aluminum production industry, scrap aluminum is melted in gas- or oil-fired reverberatory or hearth furnaces. Impurities are removed using chlorine or other fluxes until the aluminum reaches the desired purity.

Other aluminum production plants use dross in addition to scrap. Dross is a by-product of primary aluminum melting. This process further reduces the pollution resulting from primary aluminum production. It contains fluxes and varying concentrations of aluminum. "Skim," "rich," or "white dross" refer to aluminum dross with high aluminum content. "Black dross" or "salt cakes" refer to aluminum dross from practices that use salt fluxes.

The dross is crushed, screened and melted in a rotary furnace where the molten aluminum is collected in the bottom. The resulting salt slag is a waste product. To reduce this waste more of the remaining metallics may be leached into water and collected.

To eliminate the need for salt fluxes, a new plasma torch treatment has been developed to heat the rotary furnace. High concentrations of aluminum are recovered from this procedure.

Pollution Prevention in Secondary Aluminum Processing

Air emissions and solid-phase wastes are the primary concerns in the aluminum processing industry. Air emissions depend largely on the quality of scrap used. Emissions can come from smelting, refining, and the furnace effluent gases. Gases can include combustion products, hydrogen chloride and metal chlorides, aluminum oxide metals and metal compounds. To reduce emissions regardless of the type of scrap used, aluminum fluoride can be substituted for chlorine to remove impurities from the molten metal. All systems are usually connected to emissions control equipment, typically a baghouse for collecting fluorine and other gases.

Solid-phase waste from secondary aluminum production is slag formed during smelting. The slag contains chlorides, fluxes and magnesium. The metallics may be separated and reused or sold.

Liquid wastes include water that is added to the slag to help separate the different metals. The waste water may be contaminated with salt and fluxes, but can often be recovered and reused.

Annotated Bibliography

USEPA, *Profile of The Nonferrous Metals Industry*. EPA 310-R-95-010. This document discusses uses, processes and pollution prevention opportunities associated with aluminum production.

Case Study

Replacement of Organic Solvents with Water-Based Coatings for Sand Cores

Minnesota Tehcnical Assistance Program, 1994, 6/94-93

The Progress Casting Group, Inc., of Plymouth, Minnesota, is an aluminum foundry. Progress Casting used 1,1,1-trichloroethane (TCA) to coat sand cores for use in parts molding. The TCA prevented the molten metal from penetrating the cores and left a smooth finish on the finished metal piece.

Replacment of TCA with an alternative coating was promted by environmental commitments, economics of compliance and customer demands. Alternatives were evaluated for thier ability to withstand the pressure and temperatures of the molten aluminum. The alternative coating also posed problems assocated with consistent solid suspension, even application of the coating, and quick drying methods.

The alternative selected was a water- and isopropyl alcohol- (IPA) based coating. To apply the coating in a quick and even manner, Progress Casting worked with vendors to develop an automated dipping and drying system. The IPA coating requires repeated dipping, as opposed to the one application needed for TCA. The application includes a dip tank containing the IPA solution, two infrared ovens and four rotating racks to hold and lower the cores through the system. The infrared ovens were selected to dry the coating as they provided adequate time requirements and coating thickness. One problem with IPA, is the fire hazard associated with IPA's flamabiltiy.

The switch from TCA to IPA based coatings has resulted in a $59,000 savings in TCA purchase costs. These costs have been replace with 35,000 pounds of the IPA coating per year at an estimated cost of $14,500. Progress Casting has also satisfied customer demands to reduce TCA and has complied with CAAA programs.

Heat Transfer Applications
"Pollution Prevention Success Stories," WMRC, 1994

Chicago Whitemetal Casting of Chicago, Illinois casts aluminum, magnesium and zinc using die casts. To reduce costs, the casting operation evaluated possible energy reduction methods. They installed a head cogeneration system to recover heat from the aluminum remelt furnace. After recovery, the heat is used in zinc and aluminum operations. The initial system cost .. $70,000, but is estimated to have saved the company 20% of the natural gas it would have used and $180,000 in energy bills over a ten year period.

Waste water reduction was also evaluated at the plant. Quench water was originally hauled away weekly at a cost of $62,000 per year. A water filtration system was installed at the plant. The system removes impurities and returns the water for reuse. The filtration system is estimated to have saved the plant $744,000 over its 12 year life in disposal costs. Additionally, a savings of $72,000 in water usage is estimated.

5 Copper Processing

The copper processing industry refines copper from metal ores or scrap copper. The leading consumers of copper are wire mills and brass mills, which use the copper to produce copper wire and copper alloys, respectively. End uses of copper include construction materials, electronic products, and transportation equipment. Once refined, copper can be used as a powder in automotive, aerospace, electrical and electronics equipment, in anti-fouling compounds, various chemicals and medical processes. Compounds of copper include fungicides, wood preservatives, copper plating, pigments, electronic applications and specialized chemicals.

Copper can be produced as either a primary product or as a co-product of gold, lead, zinc or silver. It is mined in both the Northern and Southern Hemisphere and primarily consumed in the Northern Hemisphere with the U.S. as a primary producer and consumer.

Primary Production of Copper

Copper is mined in open pits and below ground. The ore usually contains less than 1% copper and is often associated with sulfide minerals. The ore is ground, concentrated, and slurried with water and chemical reagents. Air blown through the mixture attaches to the copper, causing it to float to the top of the slurry. The copper is then removed with a skimmer. The tailings remain and are dewatered and disposed of in tailing ponds. The water is recovered and recycled.

One of two processing methods are used to refine concentrated copper. Pyrometallurgy, or smelting, is used on ore with copper sulfide and iron sulfide minerals. The concentrate is dried and fed into a furnace. The minerals are partially oxidized and melted, resulting in segregated layers. The matte layer refers to the iron-copper sulfide mixture which sinks to the bottom. The slag, which refers to the remaining impurities, floats on top of the matte. The slag is discarded on site or sold as railroad ballast and sand blasting grit. Sulfur dioxide gases are also collected and made into sulfuric acid for use in hydrometallurgical leaching (discussed below) or sold off-site.

The matte is recovered and moved to the converter, a cylindrical vessel into which the copper is poured. Air, lime and silica are added to react with the metal oxide. Scrap copper may also be added. Iron slag is removed and often recycled back into the furnace. Sulfur dioxide is captured and converted into sulfuric acid. The converted copper, known as "blister copper," is recovered.

The blister copper then undergoes "fire refining." Air and natural gas are blown through the copper to remove any remaining sulfur and oxygen. The copper is cast into copper anodes and placed in an electrolytic cell. Once charged, the pure copper collects on the cathode and is removed as 99% pure. The copper can be sold to wire-rod mills or further processed into rods. Anode slime refers to impurities that sink to the bottom of the electrolytic cell.

The second method for refining copper is called the hydrometallurgical process. This process begins with oxidized copper ores or oxidized copper wastes. The oxidized material is leached with sulfuric acid from the smelting process. The sulfuric acid is percolated through piles of oxidized metal and collected with acid resistant liners.

Further refining may be performed using one of two processes. In cementation, the acidic solution of copper is deposited on to scrap iron in an oxidation-reduction reaction. After sufficient amounts of copper have been plated, the copper is further refined using the pyrometallurgical process. However, this process is rarely used.

Solvent extraction is more commonly used to refine copper. An organic solvent in which copper is soluble is introduced. As the copper is more soluble in the organic layer than the aqueous, it enters an organic-copper solution and is separated. Sulfuric acid is added to strip the copper from the organic solvent into an electrolytic solution.

In the electrolytic process, called electrowinning, the copper plates out onto the cathode. The cathodes are sold as-is or made into rods on-site or made into starting sheets for other electrolytic cells.

All remaining organics and acids are reused. Further, sulfur is fixed throughout the process to meet Clean Air Act Standards. If the sulfur content of the gas is over 4%, the sulfur compounds are made into sulfuric acid for use in the process or for sale to fertilizer manufacturers. Slurries with less than 4% sulfur are classified as RCRA hazardous wastes because of sulfur, cadmium, lead and other metals.

Secondary Copper Processing

Secondary copper processing involves two steps: metal pretreatment and smelting. Pretreatment includes cleaning and concentrating the copper. Concentrating is done manually or mechanically and includes sorting, stripping, shredding and magnetic separation. The metal can be further refined using pyrometallurgical methods — including sweating, insulation burning, or drying — or hydrometallurgical methods — including flotation and leaching. The concentrated metal is then smelted. Generally, copper is fire refined, similar to primary copper smelting operations although the exact procedure depends on the quality of copper scrap.

Pollution Output and Prevention in Copper Processing

Primary and secondary copper processing produce similar pollutants with similar pollution prevention opportunities. Air emissions include particulates and sulfur dioxide. Particulate air emissions usually include iron and copper oxides, but many contain other metal oxides, sulfates or sulfuric acid. Particulates are usually captured using emissions control equipment. Depending on the composition of the emissions some recovery of heavy metals may be possible.

In addition, secondary copper processing produces air emissions from the removal of excess oils and cutting fluids. The air emissions are usually captured using baghouses. After-burners may also be used to fully combust products.

Sulfur dioxide is usually captured using single stage electrostatic precipitation. Once captured, the sulfur dioxide is converted into sulfuric acid and sold or reused in process.

Liquid wastes from the copper processing plant include large quantities of water. Most of the water can be reused with minimal refinement. The leaching process creates some sulfuric acid liquid waste. The sulfuric acid is almost always directly reused. Electrolytic refining procedures also produce some liquid waste. This waste is usually sent to waste water treatment facilities and discharged.

Annotated Bibliography

USEPA, *Profile of The Nonferrous Metals Industry*. EPA 310-R-95-010. This document discusses uses, processes and pollution prevention opportunities associated with copper processing.

Lead Processing

The US is the third largest producer of primary lead, with most coming from Missouri. The primary end users of lead are batteries and ammunition. Consumers of lead include TV glass, computer glass, construction (including radiation shields), and protective coatings.

Primary Lead Processing

Primary lead production begins with sintering. Concentrated lead ore is fed into a sintering machine with iron, silica, limestone fluxes, coke, soda ash, pyrite, zinc, caustics or pollution control particulates. The mixture is blasted with hot air to burn off the sulfur and sent to the smelter.

Lead is usually smelted in a blast furnace using the carbon from the sintering machine to provide the heat source. As melting occurs, several layers form in the furnace. The molten lead layer sinks to the bottom of the furnace. A layer of the lightest elements, including arsenic and antimony, floats to the top and is referred to as the "speiss." A "matte" layer also forms from the copper and metal sulfides. Finally, a layer of blast furnace slag, which contains mostly silicates, also forms. The speiss and the matte are usually sold to copper smelters where they are refined for copper processing. The slag is stored and partially recycled, if the metal content is sufficient.

The lead from the blast furnace, called lead bullion, then undergoes the drossing process. The bullion is agitated in kettles then cooled to 700-800 degrees. This process results in molten lead and dross. Dross refers to the lead oxides, copper, antimony and other elements that float to the top of the lead. Dross is usually skimmed off and sent to a dross furnace to recover the non-lead components which are sold to other metal manufactures.

Finally, the molten lead is refined. Pyrometallurgical methods are usually used to remove the remaining non-lead components of the mixture. The non-lead metals are usually sold to other metal processing plants. The refined lead may be made into alloys or directly cast.

Pollution Sources and Prevention

Primary lead production produces air emissions, process wastes and solid wastes. Air emissions consist primarily of sulfur oxides and particulates. Sintering plant air emissions include sulfur and particulates. These emissions are usually burned in the blast furnace and eliminated. Particulate emissions from blast furnaces include lead oxides, quartz, limestone, iron pyrites, iron-limestone-silicate slag, arsenic and other metallic compounds. The exact type and amount of particulates depends largely on the input material. Emissions control equipment, usually a baghouse, is most often used to control particulates.

Blast furnaces also produce slag. The slag consists primarily of iron and silicon oxides, aluminum and calcium oxides, and other metals, depending on inputs. The slag can either be reused in the process to capture more metals or disposed of on site. If the slag is not reused, it may be treated to recover the metals for sale.

Liquid wastes from primary lead production include wastewater and slurries. Acid plant blowout from sulfuric acid production plants, slag granulation water from slag disposal, and plant wash down water from housekeeping are the primary types of liquid wastes. The water is considered RCRA K065 hazardous waste due to the lead content.

Secondary Lead Processing

Most of the lead produced comes from secondary sources. Lead scrap includes lead acetate batteries, cable coverings, pipes, sheets and lead coated, or terne bearing, metals. Solder, product waste and dross may also be recovered for its small lead content. Most secondary lead is used in batteries.

To recover lead from a battery, the battery is broken and the components are classified. The lead containing components are processed in blast furnaces for hard lead or rotary reverberatory furnaces for fine particles. The blast furnace is similar in structure to a cupola furnace used in iron foundries. The furnace is charged with slag, scrap iron, limestone, coke, oxides, dross, and reverberatory slag. The coke is used to melt and reduce the lead. Limestone reacts with impurities and floats to the top. This process also keeps the lead from oxidizing. The molten lead flows from the blast furnace into holding pots. Lead may be mixed with alloys, including antimony, tin, arsenic, copper and nickel. It is then cast into ingots.

Pollution Sources and Prevention

Air emissions and solid waste are the primary pollution concerns for secondary lead producers. Reverberatory or blast furnaces produce most of the lead waste. Products can include sulfur oxides, nitrogen oxides, antimony, arsenic, copper, or tin, depending on inputs. Lead paste desulfurization is a process used by new lead processing plants to reduce the sulfur dioxide emissions and waste sludge. The air emissions in older plants are usually controlled with settling and cooling chambers and with baghouse emissions control equipment.

The battery breaking process contributes sulfuric acid, dust, battery cases and lead compounds. The solid emissions include emissions control dust and slag from smelting. They are considered K069 hazardous wastes.

Annotated Bibliography

USEPA, *Profile of The Nonferrous Metals Industry*. EPA 310-R-95-010. This document discusses uses, processes and pollution prevention opportunities associated with lead production.

7 Zinc Processing

Zinc is the fourth most widely used metal, following iron, aluminum, and copper. Zinc is mined mostly in Canada, the former USSR, Australia, Peru, Mexico and the US. In 1993, about 50% of the zinc mined came from Alaska. Tennessee, New York and Missouri are the top producers of zinc metal.

The US is the worlds largest consumer of zinc. Eighty percent is consumed in slab format, while 20% is consumed in compounds. Most zinc is used in the galvanizing steel process. Other uses include the automotive, construction, electrical and machinery industries. Zinc compounds include agricultural chemicals, paints, pharmaceuticals, and rubber.

Primary Zinc Processing

Zinc concentration is usually done at the mine site, prior to reaching the zinc processing plant. The concentration includes crushing and flotation techniques. At the zinc processing plant, the zinc is first reduced using pyrometallurgical methods, including distillation, or hydrometallurgical methods, including electrowinning, calcination, leaching, or purification. The electrowinning process is most commonly used.

Electrowinning uses an electrolytic cell to reduce the zinc. An electric current is run from a lead-silver anode through a zinc solution. The zinc deposits on an aluminum cathode and is harvested. The zinc is then melted and cast into ingots.

Pollution Sources and Prevention

Primary zinc production produces air emissions, process wastes and solid-phase wastes. Air emissions come primarily from the zinc roasting process and consist primarily of sulfur dioxide emissions. Most emissions are recovered on site in sulfuric acid production plants, where sulfuric acid is produced.

Zinc roasters also produce particulate emissions. Particulate air emissions from primary zinc production often contain cadmium, lead and other compounds, depending on inputs. The slurry formed from the emissions control equipment is K066 hazardous waste.

The electrowinning process produces waste heat. Rather than letting the hot gas escape into the environment, some is recovered and sent to cooling towers where the steam is collected for reuse.

Wastewater is produced from leaching, purification and electrowinning. The water is usually treated and discharged. Reuse opportunities may be available.

Solid wastes include acid plant slurries, sludge from electrolytic cells and copper cakes, a by-product of zinc production, from the purification cells. Much of the waste is considered RCRA hazardous waste. Anode slime from electrolytic cells consists of impurities not captured prior to the electrowinning process. The composition usually makes the slime a RCRA hazardous waste. Copper cakes are captured and sold to copper processing plants.

Secondary Zinc Processing

Secondary zinc production uses process scrap from zinc slabs, zinc oxides and zinc dust. Selective melting may also be used to capture zinc if the zinc is mixed with other non-ferrous metals with higher melting points. Zinc is also often recovered from the furnace dust of galvanized

steel making plants. Using pyrometallurgical refinement techniques, the zinc can be recovered.

Once obtained, secondary zinc first undergoes a separation process. Magnetic separation, sink-float and hand sorting are usually used to remove the zinc from unwanted components.

After separation, the zinc is melted with new scrap from brass plants, rolling zinc clippings or die casting. The zinc is melted in a kettle, crucible, reverberatory furnace or electric induction furnace. Flux is used to trap impurities and produces dross that is skimmed from the surface of the molten zinc. The zinc is then either poured into molds or sent to refiners.

High quality scrap from dross, diecastings, and other zinc rich sources usually can be remelted without further refinement. The recovered metal can become galvanized brighten or alloy materials in copper, aluminum, magnesium, iron, lead, cadmium or tin production. Zinc helps to make the metals stronger.

Medium to low grade skims, oxide dusts, ash and residues containing zinc require more refinement before melting. These may undergo reduction, or distillation using pyrometallurgical processes. The reduction upgrades the zinc for further processing to reach the desired standards.

Pollution Sources and Prevention

Secondary zinc processing produces air emissions and solid waste emissions. Air emissions come from sweating and melting. The emissions include particulates, zinc fumes, volatile metals, flux fumes and smoke, rubber, plastics and zinc scrap. Incomplete combustion products are also emitted, but are eliminated when passed through an after burner. Particulates are collected in emissions control equipment such as baghouses. The particulates are often refined for the metals.

In distillation and oxidation processes, zinc oxides in the form of dust are produced. The oxides are collected in baghouse emissions control systems.

Air emissions are also common from the pyrometallurgical processes. If simple remelting of the zinc is required, the emissions are not high. However, if the zinc requires reduction or other refinement, emissions are likely. The lower the quality of zinc scrap, the more air emission produced in the process. Air emissions are usually collected in ventilation systems. The emissions control dust is usually sold as fertilizer or animal feed.

Solid waste is present in the form of slag. The slag from secondary zinc production usually contains copper, aluminum, iron and lead. Slag is generated during pyrometallurgical processes and may be hazardous.

Annotated Bibliography

USEPA, *Profile of The Nonferrous Metals Industry*. EPA 310-R-95-010. This document discusses uses, processes and pollution prevention opportunities for the zinc processing industry.

Glossary

Aluminum Dross: Dross is a by-product of primary aluminum melting. It consists of aluminum metal and other impurities and is frequently used in secondary aluminum production.

Attrition Sand Reclamation: Attrition sand reclamation technology spins two streams of sand in opposite directions in the presence of heat. The combination of sand abrasion and binder combustion free the sand particles from some binders.

Basic Oxide Furnace (BOF): Molten iron from the blast furnace is sent to a basic oxide furnace, which is used for the final refinement of the iron into steel. High purity oxygen is blown into the furnace and combusts carbon and silicon in the molten iron. Alloy materials may be added to enhance the characteristics of the steel.

Bayer Process: The process by which alumina is extracted from bauxite ore in primary aluminum production.

Cast Making: The process used to make the molds into which molten metal will be poured.

Coke: Coke is a solid carbon fuel and carbon source used to melt and reduce iron ore

Cokemaking: The processess used to make coke. The process begins with pulverized, bituminous coal. The coal is fed into a coke oven which is sealed and heated to very high temperatures for 14 to 36 hours. After completion, the coke is moved to quenching towers and stored until it is needed.

Continuous Casting: A sucessive series of operations that used to produce metal pieces. These operations often replace batch processes which are done in stages, leaving some equipment idle while others are in operation.

Cores: Cores are pieces that fit into the mold to create detailed internal passages in the metal piece. Cores must be strong and hard to withstand the molten metal, and collapsible so they can be removed from the metal piece after it has cooled. To obtain these properties, resins or chemical binders are usually added to sand mixtures.

Cupola Furnace: Cupola furnaces are tall, cylindrical furnaces used to melt iron and ferro alloys in foundry operations. Alternating layers of metal and ferro alloys, coke, and limestone are fed into the furnace from the top.

Direct Iron Ore Smelting (DIOS): The DIOS process is a cokeless ironmaking procedure. Molten iron is produced from coal and previously melted ores. In this process, coal and other ores can produce enough heat to melt ore, replacing coke completely (USEPA, 1995).

Dry Sand Reclamation: Dry sand reclamation relies on mechanical and pneumatic scrubbers to remove lumps and binders from sand. Mechanical scrubbing moves each sand grain through a sand-to-metal or sand-to-sand interface to remove impurities. Pneumatic scrubbers use air to propel sand between baffles. These scrubbers are particularly good for removing clay from molding sands and binders in systems that are not baked.

Electric Arc Furnaces (EAFs): Electric arc furnaces are often used in large steel foundries and steel mills. The metal is charged into the furnace, with additives to make recovery of slag easier, and heat to melt the metal is produced with an electric arc from three carbon or granite electrodes. Frequently mills producing steel with EAF technology are called mini-mills.

Energy Optimizing Furnace (EOF): EOF was developed to replace the electric arc and other steelmaking furnaces. The EOF is an oxygen

steelmaking process. Carbon and oxygen react to preheat scrap metal, hot metal and/or pig iron.

Foundries: Foundries specialize in melting and casting metal into desired shapes. Foundry products are most often used in automobiles, plumbing fixtures, train locomotives, airplanes and as metal pieces in other kinds of equipment.

Green Sand Molds: Green sand molds, used in 85% of foundries, are a mixture of sand, clay, carbonaceous material and water. The sand provides the structure for the mold, the clay binds the sand together and the carbonaceous materials prevent rust. Water is used to activate the clay.

Hall-Heroult Process: The process by which aluminum oxide from the Bayer Process is reduced to aluminum metal.

Hearth Furnaces: Hearth furnaces are used in batch melting of non-ferrous metals. The hearth can be heated by either electric or natural gas methods. Hearth furnaces are used to produce small quantities of metal, usually for art and similar industries.

HiSmelt Process: The HISmelt process, named after the HISmelt Corporation of Australia, is another cokeless iron melting process being tested. In this process, ore fines and coal are manipulated to melt iron ore.

Induction Furnaces: Induction furnaces are the most widely used type of furnace for melting iron and are increasingly popular for melting non-ferrous metals (USEPA, 1992). They are popular because they provide excellent metallurgical control and are relatively pollution free.

Ingots: Convenient shapes into which newly refined, molten metal is poured for storage. The ingots are then remelted and cast into desired molds.

Integrated Steel Mills: Integrated steel mills produce steel by refining iron ore. They produce very high quality steel with well controlled chemical compositions.

Investment Molds: Investment molds are made from ceramic substances called refractories. They are used in high precision metal castings.

Iron Carbide Production Plants: Iron carbide production plants can be an alternative to the Basic Oxide Furnace. These plants use iron carbide, an iron ore that contains 6% carbon rather than 1.5-1.8% of regular iron ore . The additional carbon ignites in the presence of oxygen and contributes heat to the iron melting process, reducing energy requirements (Ritt, 1996).

Ironmaking: During ironmaking, iron ore, coke, heated air and limestone or other fluxes are fed into a blast furnace to produce molten iron that is free from impurities.

Mini-Mills: Steel production plants that rely on steel scrap as a base material rather than ore. Products do not have the tight chemical composistion of integrated plants and have narrower product lines.

Non-Recovery Coke Battery: In non-recovery batteries, coke oven slag and other by-products are sent to the battery where they are combusted. This technique consumes the by-products, eliminating much of the air and water pollution.

Permanent Molds: Permanent molds are made from metal or other resistant material. The molds are used multiple time by industries that produce large numbers of the same piece.

Primary Metal Industries: Industries that produce ferrous or non-ferrous metal products from metal ore and / or scrap metal. Plants may refine metals, cast molten metal into desired shapes, or produce the inputs for the refining or casting process.

Pulverized Coal Injections: Pulverized coal can be substituted for coke at nearly a 1:1 ratio and can replace 25 - 40% of coke traditionally used in furnaces (USEPA, 1995). Pulverized coal injections are used to reduce pollution by reducing the volume of coke production.

Refractory: Hard, heat resistant substances such as fire clay, bricks or blocks. The refractory

protects a furnace shell from abrasion, heat and oxidation.

Sand Reclamation: "the physical, chemical or thermal treatment of a refractory aggregate to allow its reuse without significantly lowering its original useful properties as required for the application involved" American Foundrymen's Society.

Sintering: Sintering is a process in which solid wastes are combined into a porous mass that can then be added to the blast furnace. These wastes include iron ore fines, pollution control dust, coke breeze, water treatment plant sludge, and flux.

Shell Molds: Shell molds use chemically bonded sand to make the molds into which molten metal will be poured.

Slag: Impurities in the iron ore that have been captured by limestone or other fluxes.

Steel: Steel is an alloy of iron usually containing less than 1% carbon which is used most frequently in the automotive and construction industries or is cast into bars, strips, sheets, nails, spikes, wire, rods or pipes as needed by the intended user.

Thermal Sand Reclamation: Thermal reclamation uses heat in a rotary kiln, multiple-hearth furnaces, or a fluidized bed to combust binders and contaminants

Wet Sand Reclamation: Wet reclamation uses water to remove sand binders. The process uses on the different water solubilities of sand and binders to separate the two. Clay bonded systems work well with water reclamation processes because the clays are very soluble in water. Sodium silicate sand binders can also be removed using wet reclamation. Other less soluble binders may not be as effective. After the sand is soaked in a water bath it is dried and reused.