United States
Environmental Protection
Agency

Office of Water
Mail Code 4303
Washington, DC 20460

EPA-821-B-00-013
December 2000

EPA

Development Document for Final Effluent Limitations Guidelines and Standards for Synthetic-Based Drilling Fluids and other Non-Aqueous Drilling Fluids in the Oil and Gas Extraction Point Source Category

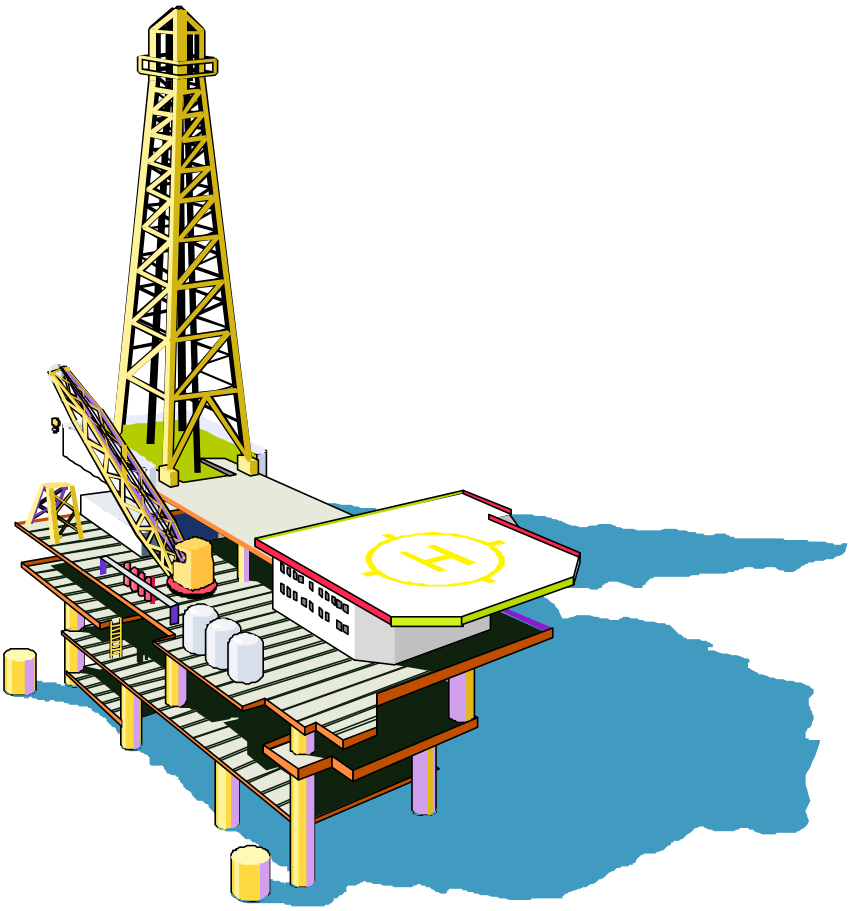

Acknowledgments

This report was prepared by Mr. Carey A. Johnston and Mr. Marvin Rubin of the Engineering and Analysis Division. Assistance was provided by Ms. Birute Vanatta of Eastern Research Group and Mr. Gary Petrazzuolo, Ms. Lynn Petrazzuolo, and Ms. Nerija Orentas of Avanti Corporation. References to proprietary technologies are not intended to be an endorsement by the Agency.

Questions or comments regarding this report should be addressed to:

Mr. Carey A. Johnston, Environmental Engineer
Engineering and Analysis Division (4303)
U.S. Environmental Protection Agency
1200 Pennsylvania Avenue, N.W.
Washington, DC 20460
(202) 260-7186
johnston.carey@epa.gov

CONTENTS

Page

CHAPTER I: INTRODUCTION

1. LEGAL AUTHORITY I-1
2. CLEAN WATER ACT I-1
   - 2.1 Best Practicable Control Technology Currently Available (BPT) I-2
   - 2.2 Best Conventional Pollutant Control Technology (BCT) I-3
   - 2.3 Best Available Technology Economically Achievable (BAT) I-3
   - 2.4 New Source Performance Standards (NSPS) I-4
   - 2.5 Pretreatment Standards for Existing Sources (PSES) and Pretreatment Standards for New Sources (PSNS) I-4
   - 2.6 Best Management Practices (BMPs) I-4
3. CWA SECTION 304(m) REQUIREMENTS AND LITIGATION I-4
4. POLLUTION PREVENTION ACT I-5
5. PRIOR FEDERAL RULEMAKINGS AND OTHER NOTICES I-7
6. CURRENT NPDES PERMIT STATUS I-10
7. REFERENCES I-11

CHAPTER II: PURPOSE AND SUMMARY OF THE REGULATION

1. PURPOSE OF THIS RULEMAKING II-1
2. SUMMARY OF THE SBF GUIDELINES II-1

CHAPTER III: DEFINITION OF SBF AND ASSOCIATED WASTE STREAMS

1. INTRODUCTION III-1
2. INDUSTRY DEFINITION AND GEOGRAPHIC COVERAGE III-1
3. WASTE STREAMS REGULATED BY THE SBF GUIDELINES III-2

CHAPTER IV: INDUSTRY DESCRIPTION

1. INTRODUCTION IV-1
2. DRILLING ACTIVITIES IV-1
   - 2.1 Exploratory Drilling IV-1
     - 2.1.1 Drilling Rigs IV-2
     - 2.1.2 Formation Evaluation IV-3
   - 2.2 Development Drilling IV-3
     - 2.2.1 Well Drilling IV-4
   - 2.3 Drilling with Subsea Pumping IV-7
   - 2.4 Types of Drilling Fluid IV-7
3. INDUSTRY PROFILE: HISTORIC AND PROJECTED DRILLING ACTIVITIES IV-8
4. REFERENCES IV-16

CONTENTS
(continued)

Page

CHAPTER V: DATA AND INFORMATION GATHERING

1. INTRODUCTION V-1
2. POLLUTANT LOADING AND NUMERIC LIMIT ANALYSES V-1
   2.1 SBF Retention on Cuttings V-1
   2.2 Days to Drill V-3
   2.3 Well Count Projections Over Next Five Years V-3
   2.4 Current and Projected OBF, WBF, and SBF Use Ratios V-4
   2.5 Waste Volumes and Characteristics V-6
3. COMPLIANCE COSTS ANALYSES V-7
   3.1 Equipment Installation and Downtime V-7
   3.2 Current Drilling Fluid Costs V-9
   3.3 Cost Savings of SBF Use as Compared with WBF Use V-9
   3.4 Construction Cost Index V-10
4. NON-WATER QUALITY ENVIRONMENTAL IMPACT ANALYSES V-10
5. COMPLIANCE ANALYTICAL METHODS V-11
6. SEABED SURVEYS V-11
7. REFERENCES V-12

CHAPTER VI: SELECTION OF POLLUTANT PARAMETERS

1. INTRODUCTION VI-1
2. STOCK LIMITATIONS OF BASE FLUIDS VI-1
   2.1 General VI-1
   2.2 Base Fluid PAH Content VI-2
   2.3 Base Fluid Sediment Toxicity VI-2
   2.4 Base Fluid Biodegradation VI-2
   2.5 Base Fluid Bioaccumulation VI-2
3. DISCHARGE LIMITATIONS VI-4
   3.1 Free Oil VI-4
   3.2 Formation Oil Contamination VI-4
   3.3 Retention of SBF on Cuttings VI-5
   3.4 Cuttings Discharge Sediment Toxicity VI-6
4. MAINTENANCE OF CURRENT REQUIREMENTS VI-7
5. REFERENCES VI-7

CHAPTER VII: DRILLING WASTES CHARACTERIZATION, CONTROL, AND TREATMENT

1. INTRODUCTION VII-1
2. DRILLING WASTE SOURCES VII-1
   2.1 Drilling Fluid Sources VII-1
   2.2 Drill Cuttings Sources VII-3
3. DRILLING WASTE CHARACTERISTICS VII-4
   3.1 Drilling Fluid Characteristics VII-5
   3.2 Drill Cuttings Characteristics VII-7
   3.3 Formation Oil Contamination VII-7

CONTENTS
(continued)

Page

4. DRILLING WASTE VOLUMES VII-8
   4.1 Factors Affecting Drilling Waste Volumes VII-8
   4.2 Estimates of Drilling Waste Volume VII-9
      4.2.1 Waste SBF/OBF Drill Cuttings Volumes VII-9
      4.2.2 SBF Drilling Fluid Retention-on-Cuttings (ROC) Values VII-11
      4.2.3 Analysis of ROC Data and Determination of ROC Values VII-15
      4.2.4 Calculation of SBF/OBF Model Well Drilling Waste Volumes VII-18
      4.2.5 WBF Waste Volumes and Characteristics VII-23
5. CONTROL AND TREATMENT TECHNOLOGIES VII-27
   5.1 BPT/BCT Technology VII-27
   5.2 Product Substitution: SBF Base Fluid Selection VII-28
      5.2.1 Currently Available Synthetic and Non-Aqueous Base Fluids VII-28
      5.2.2 PAH Content of Base Fluids VII-30
      5.2.3 Sediment Toxicity of Base Fluids VII-31
      5.2.4 Biodegradation Rate of Base Fluids VII-37
      5.2.5 Bioaccumulation VII-47
      5.2.6 Product Substitution Costs VII-47
   5.3 Solids Control: Waste Minimization/Pollution Prevention VII-48
      5.3.1 Shale Shakers VII-50
      5.3.2 High-G Shale Shakers VII-55
      5.3.3 Centrifuges VII-56
      5.3.4 Squeeze Presses VII-58
      5.3.5 Fines Control VII-58
      5.3.6 Rig Compatibility VII-59
      5.3.7 Small Volume Wastes VII-61
   5.4 Land-based Treatment and Disposal VII-62
      5.4.1 Transportation to Land-Based Facilities VII-64
      5.4.2 Land Treatment and Disposal VII-65
      5.4.3 Land-Based Subsurface Injection VII-66
   5.5 Onsite Subsurface Injection VII-67
   5.6 SBF Discharges Not Associated with Cuttings VII-69
   5.7 Additional Control Methodologies Considered VII-70
6. REFERENCES VII-70

CHAPTER VIII: COMPLIANCE COST AND POLLUTANT REDUCTION DETERMINATION OF DRILLING FLUIDS AND DRILL CUTTINGS

1. INTRODUCTION VIII-1
2. OPTIONS CONSIDERED AND SUMMARY COSTS VIII-1
3. COMPLIANCE COST METHODOLOGY VIII-2
   3.1 Drilling Activity Projections and Allocations for the Final Rule VIII-4
   3.2 Model Well Characteristics VIII-5
   3.3 Onsite Solids Control Technology Costs VIII-6
      3.3.1 Baseline Solids Control Technology Costs VIII-6
      3.3.2 BAT/NSPS Compliance Solids Control Technology Costs VIII-7
   3.4 Transportation and Onshore Disposal Costs VIII-10
      3.4.1 Baseline Transport and Disposal Costs VIII-10

CONTENTS
(continued)

Page

3.4.2 BAT/NSPS Transport and Disposal Costs VIII-13
3.5 Onsite Grinding and Injection Costs VIII-13
4. DETAILED ANALYSES OF TECHNOLOGY AND INCREMENTAL COMPLIANCE COSTS VIII-14
4.1 BAT Baseline Operational Costs VIII-20
4.2 BAT/NSPS Option 1 Discharge Option Costs VIII-22
4.3 BAT/NSPS Option 2 Discharge Option Costs VIII-24
4.4 BAT/NSPS Option 3 Zero Discharge Option Costs VIII-25
4.5 Retention on Cuttings Incremental Costs (Including Fluid Recovery/Re-use) VIII-26
4.6 Costs (Savings) Due to Efficiencies of SBF Drilling over WBF Drilling VIII-27
4.6.1 Costs (Savings) for Operators Converting from WBF to SBF VIII-27
4.6.2 Cost Impacts to Operators Currently Using SBFs VIII-29
4.7 Net Incremental BAT Costs/Savings VIII-30
4.8 NSPS Compliance Cost Analysis VIII-31
5. POLLUTANT LOADINGS (REMOVALS) VIII-32
5.1 Input Data and Methodology VIII-33
5.1.1 SBF and OBF Pollutant Loadings (Removals) in Effluent Discharges, Land Disposal, and Injected Waste VIII-33
5.1.2 WBF Well Loadings (Removals) VIII-37
5.2 Baseline Pollutant Loadings for Existing Sources VIII-38
5.3 BAT Option 1 Pollutant Loadings (Removals) for Existing Sources VIII-40
5.4 BAT Option 2 Pollutant Loadings (Removals) for Existing Sources VIII-41
5.5 BAT Option 3 Zero Discharge Pollutant Loadings (Removals) for Existing Sources VIII-44
5.6 Pollutant Removals Analysis for New Sources VIII-47
6. REFERENCES VIII-51

CHAPTER IX: NON-WATER QUALITY ENVIRONMENTAL IMPACTS AND OTHER FACTORS

1. INTRODUCTION IX-1
2. SUMMARY OF NON-WATER QUALITY ENVIRONMENTAL IMPACTS IX-1
3. ENERGY REQUIREMENTS AND AIR EMISSIONS IX-2
3.1 Water Based Drilling Fluids IX-5
3.2 Energy Requirements IX-5
3.2.1 Drilling Rig Activity IX-5
3.2.2 Baseline Energy Requirements IX-7
3.2.3 Energy Requirements for BAT/NSPS Discharge Options IX-9
3.2.4 Energy Requirements for BAT/NSPS Option 3 Zero Discharge IX-10
3.3 Air Emissions IX-14
3.4 New Source Energy Requirements and Air Emissions IX-15
4. SOLID WASTE GENERATION IX-16
5. CONSUMPTIVE WATER USE IX-19
6. OTHER FACTORS IX-19
6.1 Impact of Marine Traffic IX-19
6.2 Safety IX-20
7. AIR EMISSIONS MONETIZED HUMAN HEALTH BENEFITS IX-21

CONTENTS
(continued)

Page

8. REFERENCES IX-24

CHAPTER X: OPTIONS SELECTION RATIONALE

1. INTRODUCTION X-1
2. REGULATORY OPTIONS CONSIDERED FOR SBFs NOT ASSOCIATED WITH DRILL CUTTINGS X-1
3. REGULATORY OPTIONS CONSIDERED FOR SBFs ASSOCIATED WITH DRILL CUTTINGS X-2
   - 3.1 BPT Technology Options Considered and Selected X-2
   - 3.2 BCT Technology Options Considered and Selected X-3
   - 3.3 BAT Technology Options Considered and Selected X-3
     - 3.3.1 Overview X-3
     - 3.3.2 Stock Base Fluid Technical Availability and Economic Achievability X-9
     - 3.3.3 Discharge Limitations Technical Availability and Economic Achievability . . . X-16
   - 3.4 NSPS Technology Options Considered and Selected for Drilling Fluid Associated with Drill Cuttings X-27
   - 3.5 PSES and PSNS Technology Options Considered and Selected X-28
   - 3.6 Best Management Practices (BMPs) to Demonstrate Compliance with Numeric BAT Limitations and NSPS for Drilling Fluid Associated with Drill Cuttings X-29
4. REFERENCES X-30

CHAPTER XI: BEST MANAGEMENT PRACTICES

GLOSSARY AND ABBREVIATIONS G-1
APPENDIX VII-1: SBF/OBF Model Well Drilling Waste Volumes A-1
APPENDIX VII-2: WBF Waste Volume and Characteristics A-7
APPENDIX VIII-1: Derivation of Supply Boat Transport Days A-10
APPENDIX VIII-2: Cost (Savings) Analysis Worksheets A-16
APPENDIX VIII-3: (Deleted) A-55
APPENDIX VIII-4: Pollutant Loadings (Removals) Worksheets A-56
APPENDIX VIII-5: Pollutant Loadings (Removals) Supporting Worksheets A-91
APPENDIX IX-1: Non-Water Quality Environmental Impacts A-133

TABLES

		Page
IV-1	Number of Wells Drilled Annually, 1995 - 1997, by Geographic Area	IV-9
IV-2	Estimated Number of Wells Drilled Annually by Drilling Fluid Used for Proposed Rule	IV-12
IV-3	Estimated Number of Existing Source Wells Drilled Annually by Well and Drilling Fluid Type for the Final Rule	IV-14
IV-4	Estimated Number of New Source Wells Drilled Annually by Well and Drilling Fluid Type for the Final Rule	IV-15
VII-1	SBF Drilling Waste Characteristics	VII-6
VII-2	Model Well Volume Data	VII-10
VII-3	API Recommended Practice 13B-2 MDL Phase 1 Study Results	VII-13
VII-4	API Recommended Practice 13B-2 MDL Phase 2 Verification Results	VII-13
VII-5	Drilling Fluid Treatment System Retention on Cuttings Performance	VII-17
VII-6	Input Data and General Equations for Calculating Per-Well SBF/OBF Waste Volumes	VII-20
VII-7	Summary SBF/OBF Model Well Waste Volume Estimates	VII-21
VII-8	Estimated Offshore WBF Static Sheen Test/Toxicity Limitation Failure Rates Used in Maximum Failure Rate Analysis	VII-25
VII-9	EPA Determination of Sediment Toxicity For Base Fluids	VII-34
VII-10	EPA Determination of Sediment Toxicity for Whole Mud Formulations with Synthetic Base Fluids	VII-35
VII-11	Industry Sediment Toxicity Results	VII-36
VII-12	EPA Solid Phase Test (1000 mg/Kg)	VII-39
VII-13	EPA Solid Phase Test (2000 mg/Kg)	VII-40
VII-14	EPA Solid Phase Test (5000 mg/Kg)	VII-41
VII-15	Industry Marine Anaerobic Closed Bottle Biodegradation Test Results	VII-43
VII-16	Industry Respirometry Test Results	VII-45
VII-17	Drilling Fluid Recovery Devices	VII-52
VIII-1	Annual Technology Costs and Pollutant Loadings for Drill Cuttings BAT and NSPS Options	VIII-3
VIII-2	Summary Annual and Incremental Costs for Management of SBF-Cuttings from Existing Sources	VIII-16
VIII-3	Summary Annual and Incremental Costs for Management of SBF-Cuttings from New Sources	VIII-17
VIII-4	Estimated Number of Wells Drilled Annually	VIII-19
VIII-5	Summary Total Pollutant Loadings And Incremental Loadings (Removals) for Large Volume Wastes from Existing Sources	VIII-35
VIII-6	SBF, OBF, and WBF Annual BAT/NSPS Option 1 Pollutant Loadings and Incremental Loadings (Removals) for Large Volume Wastes from Existing Sources	VIII-39
VIII-7	SBF, OBF, and WBF Annual BAT Option 2 Pollutant Loadings and Incremental Loadings (Removals) for Large Volume Wastes from Existing Sources	VIII-43

TABLES
(continued)

Page

VIII-8 SBF, OBF, and WBF Annual BAT Option 3 Pollutant Loadings and Incremental Loadings (Removals) for Large Volume Wastes from Existing Sources VIII-46

VIII-9 Summary Total Pollutant Loadings And Incremental Loadings (Removals) for Large Volume Wastes from New Sources VIII-48

VIII-10 Summary SBF, OBF, and WBF Annual Baseline, BAT/NSPS Option 1, BAT/NSPS Option 2, and BAT/NSPS Option 3 Pollutant Loadings and Incremental Loadings (Removals) for Large Volume Wastes from New Sources VIII-49

IX-1 Summary of Annual NWQEI for Drill Cuttings IX-3

IX-2 Summary of Baseline and BAT/NSPS Options Air Emissions and Fuel Usage for Existing Sources IX-4

IX-3 Summary NWQEI by Drilling Fluid Type for Baseline and BAT/NSPS Options for Existing Sources IX-6

IX-4 Uncontrolled Emission Factors for Drill Cuttings Management Activities IX-15

IX-5 Summary Air Emissions and Fuel Usage for Gulf of Mexico New Sources IX-17

IX-6 Amounts and Incremental Increases (Decreases) of Solid Waste Disposed by Zero Discharge Technologies for Existing and New Source Wells IX-18

IX-7 Summary of Monetized Human Health Benefits or Impacts Associated with VOC, PM, and SO_2 Emissions, Existing Sources IX-23

IX-8 Summary of Monetized Human Health Benefits or Impacts Associated with VOC, PM, and SO_2 Emissions, New Sources IX-23

X-1 Properties for Reference C_{16}-C_{18} IOs SBF Used in Discharge Sediment Toxicity Testing X-27

FIGURES

		Page
IV-1	Generalized Drilling Fluids Circulation Systems	IV-6
VII-1	Low Range Spike Concentrations (1000 mg/Kg)	VII-39
VII-2	Mid-Range Spike Concentrations (2000 mg/Kg)	VII-40
VII-3	High-Range Spike Concentrations (5000 mg/Kg)	VII-41
VII-4	Industry Solid Phase Test Results	VII-42
VII-5	Industry Anaerobic Closed Bottle Test Results	VII-44
VII-6	Industry Respirometry Test Results	VII-45
VII-7	Generalized Solids Control System	VII-50
VII-8	Schematic Side and Front Views of Two-Tiered Shale Shakers	VII-54
VII-9	Configuration of Amirante Solids Control Equipment	VII-57

CHAPTER I

INTRODUCTION

1. LEGAL AUTHORITY

The U.S. Environmental Protection Agency (EPA) is promulgating Effluent Limitations Guidelines and New Source Performance Standards for discharges associated with the use of synthetic-based drilling fluids (SBFs) and other non-aqueous drilling fluids in portions of the Offshore Subcategory and Cook Inlet portion of the Coastal Subcategory of the Oil and Gas Extraction Point Source Category under the authority of Sections 301, 304 (b), (c), and (e); 306; 307; 308; 402; and 501 of the Clean Water Act (the Federal Water Pollution Control Act); 33 U.S.C. 1311, 1314 (b), (c), and (e); 1316; 1317; 1318; 1342; and 1361. The regulation and supporting technical information are presented in the following chapters of this document. This chapter describes EPA's legal authority for issuing the rule, as well as background information on prior regulations and litigation related to this rule.

2. CLEAN WATER ACT

Congress adopted the Clean Water Act (CWA) to "restore and maintain the chemical, physical, and biological integrity of the Nation's waters" (Section 101(a), 33 U.S.C. 1251(a)). To achieve this goal, the CWA prohibits the discharge of pollutants into navigable waters except in compliance with the statute. The Clean Water Act addresses the problem of water pollution on a number of different fronts. Its primary reliance, however, is on establishing restrictions on the types and amounts of pollutants discharged from various industrial, commercial, and public sources of wastewater.

Direct dischargers (i.e., those that discharge effluent directly into navigable waters) must comply with effluent limitation guidelines and new source performance standards (NSPS) in National Pollutant Discharge Elimination System ("NPDES") permits (CWA 401 and 402); indirect dischargers (i.e., those that discharge to publicly owned treatment works systems which in turn discharge into waters of the U.S.) must comply with pretreatment standards. EPA issues these guidelines and standards for categories of industrial dischargers based on the degree of pollution control that can be achieved using various levels of control technology. The guidelines and standards are summarized below.

2.1 Best Practicable Control Technology Currently Available (BPT)

Section 304(b)(1)(A) of the CWA requires EPA to identify effluent reductions attainable through the application of "best practicable control technology currently available for classes and categories of point sources." Generally, EPA determines BPT effluent levels based upon the average of the best existing performances by plants of various sizes, ages, and unit processes within each industrial category or subcategory. In industrial categories where present practices are uniformly inadequate, however, EPA may determine that BPT requires higher levels of control than any currently in place if the technology to achieve those levels can be practicably applied (see "A Legislative History of the Federal Water Pollution Control Act Amendments of 1972," U.S. Senate Committee of Public Works, Serial No. 93-1, January 1973, p. 1468).

In addition, CWA Section 304(b)(1)(B) requires a cost assessment for BPT limitations. In determining the BPT limits, EPA must consider the total cost of treatment technologies in relation to effluent reduction benefits achieved. This inquiry does not limit EPA's broad discretion to adopt BPT limitations that are achievable with available technology unless the required additional reductions are "wholly out of proportion to the costs of achieving such marginal level of reduction" (see Legislative History, op. cit. p. 170). Moreover, the inquiry does not require the Agency to quantify benefits in monetary terms [e.g., American Iron and Steel Institute v. EPA, 526 F. 2d 1027 (3rd Cir., 1975)].

In balancing costs against the benefits of effluent reduction, EPA considers the volume and nature of expected discharges after application of BPT, the general environmental effects of pollutants, and the cost and economic impacts of the required level of pollution control. In developing guidelines, the Act does not require consideration of water quality problems attributable to particular point sources, or water quality improvements in particular bodies of water.

Effluent limitations guidelines based on BPT apply to discharges of conventional, toxic, and non-conventional pollutants[1] from existing sources (CWA section 304(b)(1)). BPT guidelines generally are based on the average of the best existing performance by plants in a category or subcategory. In establishing BPT, EPA considers the cost of achieving effluent reductions in relation to the effluent reduction benefits, the age of equipment and facilities, the processes employed, process changes required, engineering aspects of the control technologies, non-water quality environmental impacts (including energy

[1] Conventional pollutants are biochemical oxygen demand (BOD_5), total suspended solids (TSS), fecal coliforn, pH, and oil and grease; toxic pollutants are those pollutants listed by the Administrator under CWA Section 307(a); nonconventional pollutants are those that are neither toxic nor listed as conventional.

requirements), and other factors the EPA Administrator deems appropriate (CWA § 304(b)(1)(B)). Where existing performance is uniformly inadequate, BPT may be transferred from a different subcategory or category.

2.2 Best Conventional Pollutant Control Technology (BCT)

The 1977 amendments to the CWA established BCT as an additional level of control for discharges of conventional pollutants from existing industrial point sources. In addition to other factors specified in section 304(b)(4)(B), the CWA requires that BCT limitations be established in light of a two-part "cost-reasonableness" test. EPA published a methodology for the development of BCT limitations which became effective August 22, 1986 (51 FR 24974, July 9, 1986).

Section 304(a)(4) designates the following as conventional pollutants: biochemical oxygen demanding pollutants (measured as BOD_5), total suspended solids (TSS), fecal coliform, pH, and any additional pollutants defined by the Administrator as conventional. The Administrator designated oil and grease as an additional conventional pollutant on July 30, 1979 (44 FR 44501).

2.3 Best Available Technology Economically Achievable (BAT)

The CWA establishes BAT as a principle means of controlling the discharge of toxic and non-conventional pollutants. In general, BAT effluent limitation guidelines represent the best existing economically achievable performance of direct discharging plants in the industrial subcategory or category. The factors considered in assessing BAT include the cost of achieving BAT effluent reductions, the age of equipment and facilities involved, the processes employed, engineering aspects of the control technology, potential process changes, non-water quality environmental impacts (including energy requirements), and such factors as the Administrator deems appropriate. The Agency retains considerable discretion in assigning the weight to be accorded to these factors. An additional statutory factor considered in setting BAT is economic achievability. Generally, the achievability is determined on the basis of the total cost to the industrial subcategory and the overall effect of the rule on the industry’s financial health. BAT limitations may be based upon effluent reductions attainable through changes in a facility's processes and operations. As with BPT, where existing performance is uniformly inadequate, BAT may be based upon technology transferred from a different subcategory within an industry or from another industrial category. BAT also may be based upon process changes or internal controls, even when these technologies are not common industry practice.

2.4 New Source Performance Standards (NSPS)

NSPS reflect effluent reductions that are achievable based on the best available demonstrated control technology. New facilities have the opportunity to install the best and most efficient production processes and wastewater treatment technologies. As a result, NSPS should represent the greatest degree of effluent reduction attainable through the application of the best available demonstrated control technology for all pollutants (i.e., conventional, non-conventional, and priority pollutants). In establishing NSPS, EPA is directed to take into consideration the cost of achieving the effluent reduction and any non-water quality environmental impacts and energy requirements.

2.5 Pretreatment Standards For Existing Sources (PSES) And Pretreatment Standards For New Sources (PSNS)

Pretreatment standards are designed to prevent the discharge of pollutants to publicly-owned treatment works (POTW) that pass through, interfere, or are otherwise incompatible with the operation of the POTW (CWA section 307(b)). Because none of the facilities to which this rule applies discharge to a POTW, pretreatment standards are not being promulgated as part of this rulemaking.

2.6 Best Management Practices (BMPs)

Section 304(e) of the CWA gives the Administrator authority to publish regulations, in addition to the effluent limitations guidelines and standards listed above, to control plant site runoff, spillage or leaks, sludge or waste disposal, and drainage from raw material storage which the Administrator determines may contribute significant amounts of toxic and hazardous pollutants to navigable waters. Section 402(a)(1) also authorizes BMPs as necessary to carry out the purposes and intent of the CWA; see 40 CFR Part 122.44(k).

3. CWA SECTION 304(m) REQUIREMENTS AND LITIGATION

Section 304(m) of the CWA, added by the Water Quality Act of 1987, requires EPA to establish schedules for (i) reviewing and revising existing effluent limitations guidelines and standards and (ii) promulgating new effluent guidelines. On January 2, 1990, EPA published an Effluent Guidelines Plan (55 FR 80), in which a schedule was established for developing new and revised effluent guidelines for several industry categories, including the oil and gas extraction industry. The Natural Resources Defense Council, Inc. challenged the Effluent Guidelines Plan in a suit filed in the U.S. District Court for the District of

Columbia (NRDC et al. v. Browner, Civ. No. 89-2980). On January 31, 1992, the Court entered a consent decree (the "304(m) Decree") that included schedules for EPA's proposal and promulgation of effluent guidelines for a number of point source categories. The most recent Effluent Guidelines Plan was published in the Federal Register on August 31, 2000 (65 FR 53008). This plan requires, among other things, that EPA take final action on the Synthetic-Based Drilling Fluids Guidelines by December 2000.

4. POLLUTION PREVENTION ACT

The Pollution Prevention Act of 1990 (PPA; 42 U.S.C. 13101 et seq., Pub. L. 101-508, November 5, 1990) “declares it to be the national policy of the United States that pollution should be prevented or reduced whenever feasible; pollution that cannot be prevented should be recycled in an environmentally safe manner, whenever feasible; pollution that cannot be prevented or recycled should be treated in an environmentally safe manner whenever feasible; and disposal or release into the environment should be employed only as a last resort...” (Sec. 6602; 42 U.S.C. 13101 (b)). In short, preventing pollution before it is created is preferable to trying to manage, treat or dispose of it after it is created. The PPA directs the Agency to, among other things, “review regulations of the Agency prior and subsequent to their proposal to determine their effect on source reduction” (Sec. 6604; 42 U.S.C. 13103(b)(2)). EPA reviewed this effluent guideline for its incorporation of pollution prevention.

According to the PPA, source reduction reduces the generation and release of hazardous substances, pollutants, wastes, contaminants, or residuals at the source, usually within a process. The term source reduction “include[s] equipment or technology modifications, process or procedure modifications, reformulation or redesign of products, substitution of raw materials, and improvements in housekeeping, maintenance, training or inventory control. The term ‘source reduction’ does not include any practice which alters the physical, chemical, or biological characteristics or the volume of a hazardous substance, pollutant, or contaminant through a process or activity which itself is not integral to or necessary for the production of a product or the providing of a service” 42 U.S.C. 13102(5). In effect, source reduction means reducing the amount of a pollutant that enters a waste stream or that is otherwise released into the environment prior to out-of-process recycling, treatment, or disposal.

In the final regulations, EPA supports pollution prevention technology by encouraging the appropriate use of synthetic-based drilling fluids (SBFs) based on the use of base fluid materials in place of traditional: (1) water-based drilling fluids (WBFs); and (2) oil-based drilling fluids (OBFs) consisting of diesel oil/or and mineral oil. The appropriate use of SBFs in place of WBFs will generally lead to more efficient and faster drilling and a per well reduction in non-water quality environmental impacts (NWQEI; including

energy requirements) and discharged pollutants. Use of SBFs may also lead to a reduced demand for new drilling platforms and development well drilling though the use of directional and extended reach drilling. Compared to OBFs, discharges from SBF-drilling operations have lower aqueous and sediment toxicities, lower bioaccumulation potentials, and faster biodegradation rates. In addition, polynuclear aromatic hydrocarbons (PAHs), including those which are priority pollutants,[2] which are constituents in OBFs are not present in SBFs.

EPA considered a "zero discharge" requirement (i.e., BAT/NSPS Option 3) for SBF-cuttings wastes. EPA has determined that, under this requirement, most operators would decrease the use of SBFs in favor of OBFs and WBFs due to lower OBF and WBF drilling fluid unit costs. EPA concluded that a zero discharge requirement for SBF-cuttings and the subsequent increase use of OBFs and WBFs would result in: (1) unacceptable NWQEIs; and (2) increased pollutant loadings to the ocean due to operators switching from SBFs to less efficient WBFs.

The appropriate use of SBF in place of OBF will eliminate the need to inject OBF-waste cuttings onsite or to barge OBF wastes to shore, thereby reducing NWQEI such as fuel use, air emissions, and any land disposal risks associated with OBFs. Operators also are using drilling fluids and creating wastes with increased toxicity when using OBFs in place of SBFs. The controlled discharge options eliminate the risk of OBF and OBF-cuttings spills and of cross-media contamination at land disposal operations from wells converting to SBF use. As stated in April 2000 (65 FR 21557), EPA uses SBF and OBF spill data in this final rule as a factor that supports a controlled discharge option. MMS spill data show that riser disconnects in deep water drilling operations release approximately 2,400 barrels of SBF drilling fluids; these incidents occur in deep water, on average, two to three times per year due to riser failure.[1] Riser disconnects in deep water are a particular concern due to: (1) increased riser tensioning; (2) deep water technical requirements (e.g., riser verticality, increased use of top drive systems, multiple flex joints in deep water risers, or placement of well heads and upper casing sections in soft sea beds); and (3) deep water ocean environments (e.g., uncharted eddy and loop currents).[2, 3]

In addition to these OBF versus SBF concerns, use of WBFs in place of SBFs also leads to sub-optimal environmental performance. Thus, replacing SBFs with WBFs results in: (1) an increase in NWQEIs due to the increased length of the drilling project; and (2) a per-well increase in the quantity of discharged pollutants due to both the poorer technical performance of WBFs (i.e., increased washout of WBF compared to SBF) and the permitted discharge of WBFs. These permitted discharges include not

---

[2] Priority pollutants are the 126 toxic pollutants listed in Appendix A to 40 CFR 423.

only WBF-associated cuttings, but neat WBF either as discharges related to dilution or bulk discharges of mud systems at a mud-type change over or at the end of well. For these reasons, EPA rejected the zero discharge option.

In addition, the technology controls in the final regulation are based on a more efficient solids control technology to increase recycling of SBF in the drilling operation. Increased SBF recycling reduces the quantity of SBF required for drilling operations and the quantity of SBF discharged with drill cuttings. A discussion of this pollution prevention technology is contained in Chapter VII of this Development Document.

5. PRIOR FEDERAL RULEMAKINGS AND OTHER NOTICES

On March 4, 1993, EPA published final effluent guidelines for the Offshore Subcategory of the Oil and Gas Extraction Point Source Category (58 FR 12454). The data and information gathering phase for this rulemaking corresponded to the introduction of SBFs in the Gulf of Mexico. Because of this timing, the range of drilling fluids for which data and information were available to EPA was limited to WBFs and OBFs using diesel and mineral oil. Industry representatives, however, submitted information on SBFs during the comment period concerning environmental benefits of SBFs over OBFs and WBFs, and problems with false positives of free oil in the static sheen test applied to SBFs.

The requirements in the offshore rule applicable to drilling fluids and drill cuttings consist of mercury and cadmium limitations on the stock barite, a diesel oil discharge prohibition, a toxicity limitation on the suspended particulate phase (SPP) generated when the drilling fluids or drill cuttings are mixed in seawater, and no discharge of free oil as determined by the static sheen test.

While the SPP toxicity test and the static sheen test, as well as their limitations, were developed for WBF, the offshore regulation applied to all types of drilling fluids and drill cuttings. Thus, under the rule, any drilling waste in compliance with the discharge limitations could be discharged. When the offshore rule was proposed, EPA believed that all drilling fluids, whether WBFs, OBFs, or SBFs, could be controlled by the SPP toxicity and static sheen tests. This is because OBFs based on diesel oil or mineral oil failed one or both of the SPP toxicity test and no free oil static sheen test. In addition, OBFs based on diesel oil were subject to the diesel oil discharge prohibition.

Based on comments received from industry, EPA thought SBFs could also be adequately controlled by the offshore regulation. After the offshore rule was proposed, EPA received several industry comments

that focused on the fact that the static sheen test could often be interpreted as giving a false positive for the presence of diesel oil, mineral oil, or formation hydrocarbons. For this reason, the industry commenters contended that SBFs should be exempt from compliance with the no free oil limitation required by the final offshore effluent guidelines.

In the final rulemaking record in 1993, EPA's response to these comments was that the prohibition on discharges of free oil was an appropriate limitation for discharge of drill fluids and drill cuttings, including SBFs. While EPA agreed that some of the newer SBFs may be less toxic and more readily biodegradable than many of the OBFs, EPA was concerned that no alternative method was offered for determining compliance with the no free oil standard to replace the static sheen test. In other words, if EPA were to exclude certain fluids from the requirement, there would be no way to determine whether diesel oil, mineral oil or formation hydrocarbons also were being discharged.

Also in the final offshore rule, EPA encouraged the use of drilling fluids that were less toxic and that biodegraded faster. EPA solicited data on alterative ways of monitoring for the no free oil discharge requirement, such as gas chromatography or other analytical methods. EPA also solicited information on technology issues related to the use of SBFs, any toxicity data or biodegradation data on these newer fluids, and cost information.

By focusing on the issue of false positives with the static sheen test, EPA interpreted the offshore effluent guidelines to mean that SBFs could be discharged provided they complied with the existing discharge requirements. At that time, however, EPA did not think that many, if any, SBFs would be able to meet the no free oil requirement.

In the final coastal effluent guidelines, EPA raised the issue of false negatives with the static sheen test as opposed to the issue of false positives raised during the offshore rulemaking. EPA had information indicating that the static sheen test does not adequately detect the presence of diesel, mineral, or formation oil in SBFs. In addition, EPA raised other concerns regarding the inadequacy of the existing effluent guidelines to control of SBF wastestreams. Thus, the final coastal effluent guidelines, published on December 16, 1996 (61 FR 66086), constitute the first time EPA identified, as part of a rulemaking, the inadequacies of the current regulations and the need for new controls for discharges associated with SBFs.

The coastal rule adopted the offshore discharge requirements to allow discharge of drilling wastes in one geographic area of the coastal subcategory (Cook Inlet, Alaska), and prohibited the discharge of drilling wastes in all other coastal areas.

Due to the lack of information concerning appropriate controls, EPA could not provide controls specific to SBFs as a part of the coastal rule. However, the coastal rulemaking solicited comments on SBFs. In responding to these comments, EPA again identified certain environmental benefits of using SBFs, and stated that allowing the controlled discharge of SBF-cuttings would encourage their use in place of OBFs. EPA also noted the inadequacies of the current effluent guidelines to control SBF waste streams and provided an outline of the parameters that EPA saw as important for adequate control. Inadequacies cited include: the inability of the static sheen test to detect formation oil or other oil contamination in SBFs; and the inability of the SPP toxicity test to adequately measure the toxicity of SBFs. EPA offered alternative tests of gas chromatography (GC) and a benthic toxicity test to verify the results of the static sheen and the SPP toxicity testing currently required. EPA also mentioned the potential need for controls on the base fluid used to formulate the SBF, based on one or more of the following parameters: PAH content, toxicity (preferably sediment toxicity), rate of biodegradation, and bioaccumulation potential.

The final coastal rule also incorporated clarifying definitions of drilling fluids for both the offshore and coastal subcategories to better differentiate between the types of drilling fluids. The preamble to the rule provided guidance to NPDES permit writers needing to write limits for SBFs on a best professional judgement (BPJ) basis. This guidance recommended using GC as a confirmation tool to assure the absence of free oil in addition to meeting the current no free oil (static sheen), toxicity, and barite limits on mercury and cadmium. EPA recommended Method 1663 as described in EPA 821-R-92-008 as a gas chromatograph with flame ionization detection (GC/FID) method to identify an increase in n-alkanes due to crude oil contamination of the synthetic materials coating the drill cuttings. Additional tests, such as benthic toxicity conducted on the synthetic material prior to use, or on whole SBF prior to discharge, were also suggested for controlling the discharge of cuttings contaminated with drilling fluid.

EPA stated its intention to further evaluate test methods for benthic toxicity and to determine an appropriate limitation if this additional test was warranted. In addition, test methods and results for bioaccumulation and biodegradation, as indicators of the rate of recovery of SBF cuttings piles on the sea floor, were to be evaluated. EPA recognized that evaluations of such new testing protocols may be beyond the technical expertise of individual permit writers, and so stated that these efforts would be coordinated as a continuing effluent guidelines effort.

On February 3, 1999 (64 FR 5488), EPA published proposed effluent limitations guidelines for the discharge of SBF drilling fluids and drill cuttings into waters of the U.S. by existing and new sources in the oil and gas extraction point source category.

EPA received comments on many aspects of the proposal. The majority of comments related to: (1) the proposed analytical test methods for stock and discharge limitations; (2) equipment basis used to set BAT and NSPS cuttings retention limitations; (3) Best Management Practices (BMPs) and their use to control small volume spills and releases of SBF; (4) the proposal engineering and economic assumptions; and (5) proposal procedural and definition issues. EPA evaluated all of these issues based on additional information collected by EPA or received during the comment period following the proposal. EPA then discussed the results of these evaluations in a Notice of Data Availability, which is discussed below.

On April 21, 2000 (65 FR 21548), EPA published a Notice of Data Availability (NODA) in which the Agency presented a summary of new data received in comments on the proposed rule or collected by EPA since the publication of the proposal. EPA discussed the major issues raised during the proposal comment period and presented several revisions to the modeling and alternative approaches to address these issues. EPA solicited comments on the data collected since proposal and on the revised modeling and alternative approaches to manage SBF discharges.

6. CURRENT NPDES PERMIT STATUS

Four EPA Regions currently issue or review permits for offshore and coastal oil and gas well drilling activities in areas where drilling wastes may be discharged: Region 4 for the Eastern Gulf of Mexico and Central/South Atlantic coast, Region 6 in the Central and Western Gulf of Mexico, Region 9 for offshore California, and Region 10 for offshore Alaska and Cook Inlet, Alaska. Permits in Regions 4, 9 and 10 have never allowed the discharge of SBFs, and those three Regions are currently preparing final general permits that specifically prohibit SBF discharges. Any drilling using SBFs will require an individual permit or a modification of the general permits.

Discharge of drill cuttings contaminated with SBF (SBF-cuttings) has occurred under the Region 6 offshore continental shelf (OCS) general permit issued in 1993 (58 FR 63964). The general permit reissued on November 2, 1998 (63 FR 58722) also does not specifically disallow the discharge of SBF-cuttings if they meet the limitations of the permit. The reason for these differences between Region 6 and other EPA Regions relates to the timing of the 1993 Region 6 general permit and the issues raised in comments during the issuance of that permit.

The previous individual and general permits of Regions 4, 9 and 10 were issued long before SBFs were developed and used. In Region 6, however, the first SBF well was drilled in June of 1992 and the development of the Region 6 OCS general permit, published December 3, 1993 (58 FR 63964), thus

corresponded to the introduction of SBF use in the GOM. After proposal of this permit, industry representatives commented that the no free oil limitation, as measured by the static sheen test, should be waived for SBFs due to the occurrence of false positives. They contended that a sheen was sometimes perceived when the SBF was known to be free of diesel oil, mineral oil, or formation oil. These comments were essentially the same as those submitted as part of the offshore rulemaking, which occurred in the same time frame. EPA responded as it had in the offshore rulemaking, maintaining the static sheen test until there existed a replacement test to determine the presence of free oil. EPA stated that if the current discharge requirements could be met, then the drilling fluid and associated wastes could be discharged. This response was consistent with EPA's position that SBF drilling wastes could be discharged as long as the discharge met permit requirements. But again, in the context of these comments, EPA did not expect that many, if any SBFs, would be able to meet the static sheen requirements.

In addition to the requirements of the offshore guidelines, the Region 6 OCS general permit also prohibited the discharge of oil-based and inverse emulsion drilling fluids. Although SBFs are, in chemical terms, inverse emulsion drilling fluids, the definition in the permit limited the term "inverse emulsion drilling fluids" to mean "an oil-based drilling fluid which also contains a large amount of water." Further, the permit provides a definition for oil-based drilling fluid as having "diesel oil, mineral oil, or some other oil as its continuous phase with water as the dispersed phase." Since the SBFs clearly do not have diesel or mineral oil as the continuous phase, there was a question of whether synthetic base fluids (and more broadly, other oleaginous base fluids) used to formulate the SBFs are "some other oil." With consideration of the intent of the inverse emulsion discharge prohibition, and the known differences in PAH content, toxicity, and biodegradation between diesel and mineral oil versus synthetic fluids, EPA determined that SBFs were not inverse emulsion drilling fluids as defined in the Region 6 general permit. This determination is exemplified by the separate definitions for OBFs and SBFs introduced with the Coastal Effluent Guidelines (see 61 FR 66086, December 16, 1996).

7. REFERENCES

1. Johnston, C.A., EPA. 2000. Memorandum to the File, Telephone Conversation with T. Prosser, Maurer Engineering. 11/22/00. (Record No. IV.B.a.3)

2. Johnston, 2000 - Attendee Information from the DOE/MMS Deepwater Dual-Density Drilling Workshop, Houston, TX. 9/28/00. (Record No. IV.B.a.4)

3. Furlow, W. and M. Deluca. 2000. Riser management taking center stage as drilling moves into greater depths. *Offshore*, January 2000. Pp 32-33. (Record No. IV.B.a.5)

CHAPTER II

PURPOSE AND SUMMARY OF THE REGULATION

1. PURPOSE OF THIS RULEMAKING

The purpose of this rulemaking is to amend the effluent limitations guidelines and standards for the control of discharges of certain pollutants associated with the use of synthetic-based drilling fluids (SBFs) and other non-aqueous drilling fluids in portions of the Offshore Subcategory and the Cook Inlet portion of the Coastal Subcategory of the Oil and Gas Extraction Point Source Category. These limitations apply to effluent discharges when oil and gas wells are drilled using SBFs or other non-aqueous drilling fluids (henceforth collectively referred to simply as SBFs) in coastal and offshore regions in locations where drilling wastes may be discharged. The processes and operations that comprise the offshore and coastal oil and gas subcategories are currently regulated under 40 CFR Part 435, Subparts A (offshore) and D (coastal).

2. SUMMARY OF THE SBF GUIDELINES

EPA is establishing regulations based on the "best practicable control technology currently available" (BPT), "best conventional pollutant control technology" (BCT), "best available control technology economically achievable" (BAT), and the best available demonstrated control technology (BADCT) for new source performance standards (NSPS), for the waste stream of synthetic-based drilling fluids and other non-aqueous drilling fluids, and cuttings contaminated with these drilling fluids.

For certain drilling situations, such as drilling in reactive shales, high angle and/or high displacement directional drilling, and drilling in deep water, progress with water-based drilling fluids (WBFs) can be slow, costly, or even impossible, and often creates a large amount of drilling waste. In these situations, the well is normally drilled with traditional oil-based drilling fluids (OBFs), which use diesel oil or mineral oil as the base fluid. Because EPA rules or current permits require zero discharge of these wastes, they are either sent to shore for disposal in non-hazardous oil field waste (NOW) sites or injected into disposal wells.

Since about 1990, the oil and gas extraction industry has developed many new oleaginous (oil-like) base materials from which to formulate high performance drilling fluids. A general class of these are called the synthetic materials, such as the vegetable esters, poly alpha olefins, internal olefins, linear alpha olefins, synthetic paraffins, ethers, linear alkyl benzenes, and others. Other oleaginous materials have also been developed for this purpose, such as the enhanced mineral oils and non-synthetic paraffins. Industry developed SBFs with these synthetic and non-synthetic oleaginous materials as the base fluid to provide the drilling performance characteristics of traditional OBFs based on diesel and mineral oil, but with lower environmental impact and greater worker safety through lower toxicity, elimination of polynuclear aromatic hydrocarbons (PAHs), faster biodegradability, lower bioaccumulation potential, and, in some drilling situations, less drilling waste volume. EPA believes that this product substitution approach is an excellent example of pollution prevention that can be accomplished by the oil and gas industry.

EPA intends that these regulations control the discharge of SBFs in a way that reflects application of appropriate levels of technology, while also encouraging their use as a replacement to the traditional mineral oil- and diesel oil-based fluids. Available information indicate that use of certain SBFs and discharge of the cuttings waste with proper controls would overall be environmentally preferable to the use of OBFs. This is because OBFs are subject to zero discharge requirements, and thus, must be shipped to shore for land disposal or injected underground, resulting in higher air emissions, increased energy use, and increased land disposal of oily wastes. By contrast, the discharge of cuttings associated with SBFs would eliminate those impacts. At the same time, EPA recognizes that the discharge of improperly controlled SBFs may have impacts to the receiving water. Because SBFs are water non-dispersible and sink to the seafloor, the primary potential environmental impacts are associated with the benthic community. EPA's information to date, including seabed surveys in the Gulf of Mexico, indicate that the effect zone of the discharge of certain SBFs is within a few hundred meters of the discharge point and may be significantly recovered in one to two years. EPA believes that impacts are primarily due to smothering by the drill cuttings, changes in sediment grain size and composition (physical alteration of habitat), and anoxia (absence of oxygen) caused by the decomposition of the organic base fluid. The benthic smothering and changes in grain size and composition from the cuttings are effects that are also associated with the discharge of WBFs and associated cuttings.

EPA finds that these impacts, which are believed to be of limited duration, are less harmful to the environment than the non-water quality environmental impacts associated with the zero discharge requirement applicable to OBFs. EPA estimates that the final rule will reduce air emissions by 2,927 tons per year, decrease fuel use by 200,817 barrels per year of oil equivalent, and reduce the discharge of 118 million pounds of cuttings. These estimates are based on the current industry practice of discharging SBF-

cuttings outside of 3 miles in the Gulf of Mexico and no discharge of SBFs in any other areas, including 3 miles offshore of California and in offshore and Cook Inlet, Alaska.

As SBFs came into commercial use, EPA determined that the current effluent limitations guidelines and discharge monitoring methods, which were developed to control the discharge of WBFs, did not appropriately control the discharge of these new drilling fluids. Since cuttings associated with WBFs disperse in water, oil contamination of WBFs with formation oil or other sources can be measured by the static sheen test, and any toxic components of the WBFs will disperse in the aqueous phase and be detected by the suspended particulate phase (SPP) toxicity test. With SBFs, which do not disperse in water but instead sink as a mass, formation oil contamination has been shown to be less detectible by the static sheen test. Similarly, the potential sediment toxicity of the discharge is not apparent using the current SPP toxicity test.

EPA has therefore sought to identify methods to control the discharge of cuttings associated with SBFs (SBF-cuttings) in a way that reflects the appropriate level of technology. One way to do this is through stock limitations on the base fluids from which the drilling fluids are formulated. This ensures that substitution of synthetic and other oleaginous base fluids for traditional mineral oil and diesel oil reflects the appropriate level of technology. Parameters that distinguish the various base fluids are their PAH content, sediment toxicity, and rate of biodegradation.

EPA also is controlling SBF-cuttings discharges with limitations on the toxicity (sediment and solid particulate phase) of the SBF at the point of discharge and a limitation on the mass (as volume) or concentration of SBFs discharged. The latter type of limitation takes advantage of the solids separation efficiencies achievable with SBFs, and consequently minimizes the discharge of organic and toxic components. Further, field results show that: (1) cuttings are dispersed during transit to the seabed and no cuttings piles are formed when SBF concentrations on cuttings are held below 5%; and (2) cuttings discharged from cuttings dryers (with SBF retention values under 5%) in combination with a sea water flush, hydrate very quickly and disperse like water-based cuttings. EPA maintains that SBFs separated from drill cuttings meet zero discharge requirements, as this is the current industry practice due to the value of these drilling fluids.

EPA is promulgating stock limitations and discharge limitations in a two part approach to control SBF-cuttings discharges under BAT. The first part is based on product substitution through use of stock limitations (e.g., sediment toxicity, biodegradation, PAH content, metals content) and discharge limitations (e.g., diesel oil prohibition, formation oil prohibition, sediment toxicity, aqueous toxicity). The second part

is the control of the quantity of SBF discharged with SBF-cuttings. EPA finds that the second part is particularly important because limiting the amount of SBF content in discharged cuttings controls: (1) the amount of SBF discharged to the ocean; (2) the biodegradation rate affect of discharged SBF; and (3) the potential for SBF-cuttings to develop cuttings piles and mats which are detrimental to the benthic environment.

Thus, EPA is establishing limits appropriate to the use of SBFs in the drilling operation. EPA is promulgating zero discharge of neat SBFs (not associated with cuttings), which reflects current practice. The limitations applicable to cuttings contaminated with SBFs are as follows:

- Stock Limitations on Base Fluids (BAT/NSPS):

  - Maximum PAH content of 10 ppm (wt. based on phenanthrene/wt. base fluid) as measured by EPA Method 1654A.

  - Maximum sediment toxicity of SBF base fluids that allows discharge of only SBF-cuttings that are as toxic or less toxic than C_{16} - C_{18} internal olefins (IOs) as measured by the 10-day sediment toxicity test [ASTM E1367-92 supplemented by preparation procedures in Appendix 3 in Subpart A of 40 CFR 435] using natural or formulated sediment and *Leptocheirus plumulosus* as the test species. Alternatively, the limitation is expressed as "a sediment toxicity ratio" defined as the 10-day LC_{50} of C_{16} - C_{18} IOs/ 10-day LC_{50} of the stock base fluid. This ratio must be less than 1.0.

  - Minimum rate of biodegradation (biodegradation equal to or faster than C_{16} - C_{18} internal olefin by the marine anaerobic closed bottle biodegradation test [i.e., ISO 11734:1995 as modified at Appendix 4 in Subpart A of 40 CFR 435]). Alternatively, the limitation is expressed as "a biodegradation rate ratio" defined as the percent degradation of C_{16} - C_{18} IOs/ percent degradation of the stock base fluid, both at 275 days. This ratio must be less than 1.0.

- Discharge Limitations on Cuttings Contaminated with SBFs:

  - No free oil as determined by the static sheen test (Appendix 1 to Subpart A of 40 CFR 435). (BPT/BCT/NSPS)

  - Zero discharge of formation oil as measured at two points. First, SBF must be free of formation oil before its initial use as detected by gas chromatography with mass spectroscopy (GC/MS; Appendix 5 to Subpart A of 40 CFR 435). Second, in the SBF recovered by the solids control equipment as measured by the reverse phase extraction (RPE) method (Appendix 6 to Subpart A of 40 CFR 435). (BAT/NSPS)

  - Maximum well-average retention of SBF on cuttings expressed as the percentage of base fluid on wet cuttings. The well-averaged retention limitation for SBFs with the environmental performance (e.g., sediment toxicity, biodegradation) of vegetable esters or low viscosity esters is 9.4%; and for SBFs with the environmental performance of C_{16} - C_{18} internal olefins (IOs) is 6.9%. (BAT/NSPS)

  - Maximum sediment toxicity of SBF discharged with cuttings that allows discharge of only SBF cuttings that are as toxic or less toxic than C_{16} - C_{18} IOs as measured by the 10-day sediment toxicity test (ASTM E1367-92 supplemented by preparation procedures in Appendix 3 in Subpart A of 40 CFR 435) using natural or formulated sediment and *Leptocheirus plumulosus* as the test species. Alternatively, the limitation is expressed as "a sediment toxicity ratio" defined as the 10-day LC_{50} of C_{16} - C_{18} IOs/10-day LC_{50} of the SBF being discharged with cuttings. This ratio must be less than 1.0. (BAT/NSPS)

- Discharges remain subject to the following requirements already applicable to all drilling waste discharges and thus these requirements are not within the scope of this rulemaking:

  - Mercury limitation in stock barite of 1 mg/kg. (BAT/NSPS)

  - Cadmium limitation in stock barite of 3 mg/kg. (BAT/NSPS)

  - Diesel oil discharge prohibition. (BAT/NSPS)

- Minimum aqueous phase toxicity (96-hour LC_{50}) of 3% by volume for SBF-cuttings using the suspended particulate phase (SPP). (BAT/NSPS)

This final regulation establishes the geographic areas where drilling wastes may be discharged: the offshore subcategory waters beyond 3 miles from the shoreline, and in Alaska offshore waters with no 3-mile restriction. The only coastal subcategory waters where drilling wastes may be discharged is in Cook Inlet, Alaska. EPA is retaining the zero discharge limitations in areas where discharge is currently prohibited and these requirements are not within the scope of this rulemaking.

CHAPTER III

DEFINITION OF SBF AND ASSOCIATED WASTE STREAMS

1. INTRODUCTION

This chapter describes the industry, geographic areas, and waste streams to which this regulation would apply.

2. INDUSTRY DEFINITION AND GEOGRAPHIC COVERAGE

The final rule applies to certain coastal and offshore facilities included in the following standard industrial classification (SIC) codes: 1311 - Crude Petroleum and Natural Gas, 1381 - Drilling Oil and Gas Wells, 1382 - Oil and Gas Field Exploration Services, and 1389 - Oil and Gas Field Services, not classified elsewhere.

This regulation applies to offshore and coastal facilities located in waters where drilling wastes are allowed for discharge under the current effluent guidelines at 40 CFR Part 435, Subparts A (Offshore) and D (Coastal). The offshore subcategory of the oil and gas extraction point source category, as defined in 40 CFR 435.10, comprises those structures involved in exploration, development, and production operations seaward of the inner boundary of the territorial seas (shoreline). The discharge of drilling waste is allowed within the offshore subcategory beyond three miles from shore, except in offshore Alaska where there is no three-mile discharge prohibition. The coastal subcategory of the oil and gas extraction point source category, as defined in 40 CFR 435.40, comprises those facilities involved in exploration, development, and production operations in waters of the U.S. landward of the inner boundary of the territorial seas (shoreline). The only coastal area where discharge of water-based drilling fluid is allowed in the coastal subcategory is in Cook Inlet, Alaska.

To summarize, this regulation is applicable to facilities engaged in the drilling of oil and gas wells in (a) offshore waters greater that three miles from shore, except in Alaska offshore waters and (b) Cook Inlet, Alaska.

3. WASTE STREAMS REGULATED BY THE SBF GUIDELINES

This rule applies to wastes generated when oil and gas wells are drilled with synthetic-based drilling fluids (SBFs) and other non-aqueous drilling fluids by facilities in coastal and offshore locations where drilling wastes may be discharged. These wastes include the drilling fluids themselves, and drill cuttings contaminated with these drilling fluids.

This rule also amends the current effluent guidelines such that the current guidelines are applicable only to water-based drilling fluids (WBF), while these SBF discharge requirements are applicable to all other drilling fluids. To achieve this, EPA is defining WBFs and non-aqueous drilling fluids such that all drilling fluids will fall into one classification or the other. In this way, all drilling fluids are controlled by either applying the current requirements for WBFs or the final requirements for non-aqueous drilling fluids. The definition is based on the miscibility (solubility) of the base fluid in water. The definitions for various drilling fluids are as follows:

- A **water-based drilling fluid** has water or a water miscible fluid as the continuous phase and the suspending medium for solids, whether or not oil is present.

- A **non-aqueous drilling fluid** is one in which the continuous phase is a water immiscible fluid such as an oleaginous material (e.g., mineral oil, enhanced mineral oil, paraffinic oil, or synthetic material such as olefins and vegetable esters).

- An **oil-based drilling fluid** has diesel oil, mineral oil, or some other oil, but neither a synthetic material nor enhanced mineral oil, as its continuous phase with water as the dispersed phase. Oil-based drilling fluids are a subset of non-aqueous drilling fluids.

- An **enhanced mineral oil-based drilling fluid** has an enhanced mineral oil as its continuous phase with water as the dispersed phase. Enhanced mineral oil-based drilling fluids are a subset of non-aqueous drilling fluids.

- A **synthetic-based drilling fluid** has a synthetic material as its continuous phase with water as the dispersed phase. Synthetic-based drilling fluids are a subset of non-aqueous drilling fluids.

In addition, there are other types of non-aqueous drilling fluids that are not listed in the definitions above. For example, drilling fluids based on synthetic linear paraffins are considered non-aqueous drilling fluids.

CHAPTER IV

INDUSTRY DESCRIPTION

1. INTRODUCTION

This chapter describes the major processes associated with the offshore oil and gas extraction industry, and presents the current and projected drilling activities for this industry.

2. DRILLING ACTIVITIES

There are two types of drilling associated with oil and gas operations: exploratory and development. Exploratory drilling includes those operations drilling wells to determine potential hydrocarbon reserves. Development drilling includes those operations drilling production wells once a hydrocarbon reserve has been discovered and delineated. Although the rigs used in exploratory and development drilling sometimes differ, the drilling process is generally the same for both types of drilling operations.

The water depth in which either exploratory or development drilling occurs may determine the operator's choice of drill rigs and drilling systems, including the type of drilling fluid. The Minerals Management Service (MMS) and the drilling industry classify wells as located in either deep water or shallow water, depending on whether drilling is in water depths greater than 1,000 feet or less than 1,000 feet, respectively.

2.1 Exploratory Drilling

Exploration for hydrocarbon-bearing strata consists of several indirect and direct methods. Indirect methods, such as geological and geophysical surveys, identify the physical and chemical properties of formations through surface instrumentation. Geological surveys determine subsurface stratigraphy to identify rock formations that are typically associated with hydrocarbon bearing formations. Geophysical surveys establish the depth and nature of subsurface rock formations and identify underground conditions favorable to oil and gas deposits. There are three types of geophysical surveys: magnetic, gravity, and seismic. These surveys are conducted from the surface with equipment specially designed for this purpose.

Direct exploratory drilling, however, is the only method to confirm the presence of hydrocarbons and to determine the quantity of hydrocarbons after indirect methods have indicated hydrocarbon potential. Exploratory wells are also referred to as "wildcats."

Exploratory wells may be drilled to shallow or deep footage, depending on the purpose of the well. Shallow exploratory wells are usually drilled in the initial phases of exploration to discover the presence of oil and gas reservoirs. Deep exploratory wells are usually drilled to establish the extent of the oil or gas reservoirs, once they have been discovered. These types of exploration activities are usually of short duration, involve a small number of wells, and are conducted from mobile drilling rigs.

2.1.1 *Drilling Rigs*

Mobile drilling rigs are used to drill exploratory wells because they can be moved easily from one drilling location to another. These units are self contained and include all equipment necessary to conduct the drilling operation plus living quarters for the crew. The two basic types of mobile drilling units are bottom-supported units and floating units. Bottom-supported units include submersibles and jackups. Floating units include inland barge rigs, semi-submersibles, drill ships, and ship-shaped barges.[1]

Bottom-supported drilling units are typically used in the Gulf of Mexico region when drilling occurs in shallow waters. Submersibles are barge-mounted drilling rigs that are towed to the drill site and sunk to the bottom. There are two common types of submersible rigs: posted barge and bottle-type.

Jackups are barge-mounted drilling rigs that have extendable legs that are retracted during transport. At the drill site, the legs are extended to the seafloor. As the legs continue to extend, the barge hull is lifted above the water. Jackup rigs can be used in waters up to 300 feet deep. There are two basic types of design for jackup rigs: columnar leg and open-truss leg.

Floating drilling units are typically used when drilling occurs in deep waters and at locations far from shore. Semi-submersible units are able to withstand rough seas with minimal rolling and pitching tendencies. Semi-submersibles are hull-mounted drilling rigs that float on the surface of the water when empty. At the drilling site, the hulls are flooded and sunk to a certain depth below the surface of the water. When the hulls are fully submerged, the unit is stable and not susceptible to wave motion due to its low center of gravity. The unit is moored with anchors to the seafloor. There are two types of semi-submersible rigs: bottle-type and column-stabilized.

Drill ships and ship-shaped barges are vessels equipped with drilling rigs that float on the surface of the water. These vessels maintain position above the drill site by anchors on the seafloor or the use of propellers mounted fore, aft, and on both sides of the vessel. Drill ships and ship–shaped barges are susceptible to wave motion because they float on the surface of the water, and thus are not suitable for use in heavy seas.

2.1.2 *Formation Evaluation*

The operator constantly evaluates characteristics of the formation during the drilling process. The evaluation involves measuring properties of the reservoir rock and obtaining samples of the rock fluids from the formation. Three common evaluation methods are well logging, coring, and drill stem testing. Well logging uses instrumentation that is placed in the wellbore and measures electrical, radioactive, and acoustic properties of the rocks. Coring consists of extracting rock samples from the formation and characterizing the rocks. Drill stem testing brings fluids from the formation to the surface for analysis.[1]

2.2 Development Drilling

Development of oil and gas involves drilling wells into the identified reservoirs to initiate hydrocarbon extraction, increase production, or replace wells that are not producing on existing production sites. Development wells tend to be smaller in diameter than exploratory wells because, since the geological and geophysical properties of the producing formation are known, drilling difficulties can be anticipated and the number of workovers (remedial procedures) during drilling minimized.

The two most common types of rigs used in developmental drilling operations are the platform rig and the mobile offshore drilling unit. Development wells are often drilled from fixed platforms because once the exploratory drilling has confirmed that an extractable quantity of hydrocarbons exists, a platform is constructed at that site for drilling and production operations.

To extract hydrocarbons from the reservoir, several wells are drilled into different parts of the formation. Because all wells must originate directly below the platform, a special drilling technique, called "controlled directional drilling," is used to steer the direction of the hole and penetrate different portions of the reservoir. Directional drilling involves drilling the top part of the well straight and then directing the wellbore to the desired location in non-vertical directions. This requires special drilling tools and devices that measure the direction and angle of the hole. Directional drilling also requires the use of drilling fluids

that provide more lubricity to prevent temperature build up and stuck pipe incidents due to the increased friction on the drill bit and drill string.

2.2.1 *Well Drilling*

The process of preparing the first few hundred feet of a well is referred to as "spudding." This process consists of extending a large diameter pipe, known as the conductor casing, from a few hundred feet below the seafloor up to the drilling rig. The conductor casing, which is approximately two feet in diameter, is either hammered, jetted, or placed into the seafloor depending on the composition of the seafloor. If the composition of the seafloor is soft, the conductor casing can be hammered into place or lowered into a hole created by a high-pressure jet of seawater. In areas where the seafloor is composed of harder material, the casing is placed in a hole created by rotating a large-diameter drill bit on the seafloor. In all cases, the cuttings or solids displaced from setting the casing are not brought to the surface and are expended onto the seafloor.

Rotary drilling is the drilling process used to drill the well. Rotary drilling equipment uses a drill bit attached to the end of a drill pipe, referred to as the "drill string," which makes a hole in the ground when rotated. Once the well is spudded and the conductor casing is in place, the drill string is lowered through the inside of the casing to the bottom of the hole. The bit rotates and is slowly lowered as the hole is formed. As the hole deepens, the walls of the hole tend to cave in and widen, so periodically the drill string is lifted out of the hole and casing is placed into the newly formed portion of the hole to protect the wellbore. This process of drilling and adding sections of casing is continued until final well depth is reached.

Rotary drilling utilizes a system of circulating drilling fluid to move drill cuttings away from the bit and out of the borehole. The drilling fluid, or mud, is a mixture of water or sometimes other base fluids, special clays, and certain minerals and chemicals. The drilling fluid is pumped downhole through the drill string and is ejected through the nozzles in the drill bit with great speed and pressure. The jets of fluid lift the cuttings off the bottom of the hole and away from the bit so that the cuttings do not interfere with the effectiveness of the drill bit. The drilling fluid is circulated to the surface through the space between the drill string and the casing, called the annulus. At the surface, the drill cuttings, silt, sand, and any gases are removed from the drilling fluid before returning it downhole through the drill string to the bit. The cuttings, sand, and silt are separated from the drilling fluid by a solids separation process which typically includes a shale shaker, desilter, and desander, and sometimes centrifuges. Figure IV-1 presents a schematic flow diagram of a generalized drilling fluid circulation system. Some of the drilling fluid remains with the cuttings after solids separation. Following solids separation, the cuttings are disposed in one of three ways,

depending on the type of drilling fluid used and the oil content of the cuttings. The disposal methods, which are described in detail in Chapter VII, are discharge, transport to shore for land-based disposal, and onsite subsurface injection.

Drilling fluids function to cool and lubricate the bit, stabilize the walls of the borehole, and maintain equilibrium between the borehole and the formation pressure. The drilling fluid must exert a higher pressure in the wellbore than exists in the surrounding formation, to prevent formation fluids (water, oil, and gas) from entering the wellbore which will otherwise migrate from the formation into the wellbore, and potentially create a blowout. A blowout occurs when drilling fluids are ejected from the well by subsurface pressure and the well flows uncontrolled. To prevent well blowouts, high pressure safety valves called blowout preventers (BOPs) are attached at the top of the well.

Because formation pressure varies at different depths, the density of the drilling fluid must be constantly monitored and adjusted to the downhole conditions during each phase of the drilling project. One purpose of setting casing strings is to accommodate different fluid pressure requirements at different well depths. Other properties of the drilling fluid, such as lubricity, gel strength, and viscosity, must also be controlled to satisfy changing drilling conditions. The fluid must be replaced if the drilling fluid cannot be adjusted to meet the downhole drilling conditions. This is referred to as a “changeover.”

The solids control system is necessary to maintain constant fluid properties and/or change them as required by the drilling conditions. The ability to remove drill solids from the drilling fluid, referred to as “solids removal efficiency,” is dependent on the equipment used and the formation characteristics. High solids content in the drilling fluid, or a low solids removal efficiency, results in increased drilling torque and drag, increased tendency for stuck pipe, increased fluid costs, and reduced wellbore stability. Detailed discussion of solids control systems can be found in Chapter VII.

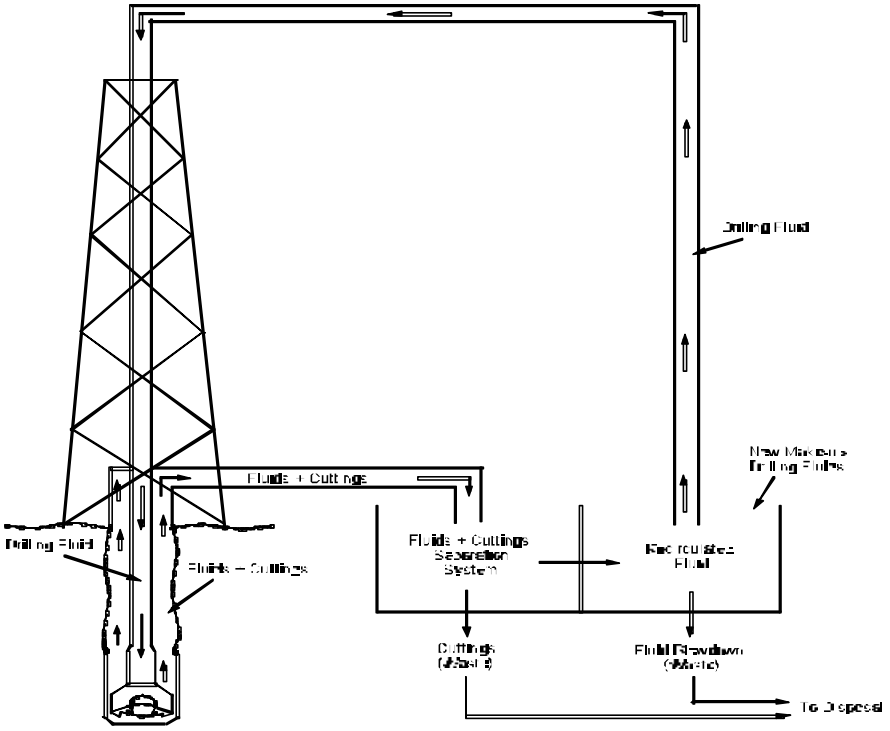

Figure IV-1
Generalized Drilling Fluids Circulation Systems

In addition to using solids separation equipment, operators control the solids content of the drilling fluid by adding fresh drilling fluid or components to the circulating fluid system to reduce the percentage of solids and to rebuild the desired rheological properties of the fluid. A disadvantage of dilution is that the portion of the fluid removed, or displaced, from the circulating system must be stored or disposed. Also, additional quantities of fluid additives are required to formulate the replacement fluid. Both of these add expenses to the drilling project.

2.3 Drilling with Subsea Pumping

For use in the relatively new area of deep water drilling, generally greater than 3,000 feet of water, EPA is aware of a proprietary innovative technology that is claimed by the developer to contribute to a number of environmental and cost benefits.[2] The technology, referred to as "subsea pumping," involves pumping the drilling fluid up a pipe separate from the drill string annulus by means of pumps at or near the seafloor. Rotary drilling methods are generally performed as described above, with the exception that the drilling fluid is boosted by the pump near the seafloor. By boosting the drilling fluid, the adverse effects on the wellbore caused by the drilling fluid pressure from the seafloor to the surface is eliminated, thereby allowing wells to be drilled with as much as 50 percent reduction in the number of casing strings generally required to line the well wall. Wells are drilled in less time, including less trouble time. The developer of this technology claims that subsea pumping can significantly improve drilling efficiencies and thereby reduce the volume of drilling fluid discharged, as well as reduce the non-water quality effects of fuel use and air emissions. Because fewer casing strings are needed, the hole diameter in the upper sections of the well can be smaller, which reduces the amount of cuttings produced. Also, the well bore will require fewer casing strings of smaller diameter, resulting in a reduction in steel consumption.

To enable the pumping of drilling fluids and cuttings to the surface, about half of the drill cuttings, comprising the cuttings larger than approximately one-quarter inch, are separated from the drilling fluid and discharged at the seafloor because these cuttings cannot reliably be pumped to the surface. With a currently reported design, the drill cuttings that are separated at the seafloor are discharged through an eductor hose at the seafloor within a 300-foot radius of the well site. The drilling fluid, which is boosted at the seafloor and transports the remainder of the drill cuttings back to the surface, is processed as described in the general rotary drilling methods presented in section IV.2.2.1. For purposes of monitoring, samples of the drilling fluid can be taken prior to subsea treatment for separation of the larger cuttings, and transported to the surface for separation of cuttings in a manner identical to that employed at the seafloor.

2.4 Types of Drilling Fluid

Water-based drilling fluids (WBFs) are the most commonly used drilling fluids and perform well enough to be used for most drilling. Upper well sections usually are drilled with WBF, and a conversion to oil-based fluid (OBF) will, in general, be made only if cost and technical considerations show a preference towards OBF. WBFs are not only the least expensive drilling fluids on a per-barrel basis, but in general they are less expensive to use because the resultant drilling wastes can be discharged onsite provided these wastes pass regulatory requirements.

For certain drilling situations, such as drilling in reactive shales, high angle directional drilling, and drilling in deep water, progress with WBFs can be slow, costly, or even impossible, and often creates a large amount of drilling waste. In these situations, the well is normally drilled with traditional OBFs, which use diesel oil or mineral oil as the base fluid. Because EPA rules require zero discharge of these wastes, they are either transported to shore for disposal or injected into isolated subsurface formations at the drill site.

Since about 1990, the oil and gas extraction industry has developed many new oleaginous (oil-like) base materials from which to formulate high performance drilling fluids. A general class of these is called the synthetic materials, such as the vegetable esters, poly alpha olefins, internal olefins, linear alpha olefins, synthetic paraffins, ethers, linear alkyl benzenes, and others. Other oleaginous materials have also been developed for this purpose, such as the enhanced mineral oils and non-synthetic paraffins. Industry developed synthetic-based drilling fluids (SBFs) with these synthetic materials as the base fluid to provide the drilling performance characteristics of traditional OBFs based on diesel and mineral oil, but with the potential for lower environmental impact and greater worker safety through lower toxicity, elimination of PAHs, faster biodegradability, lower bioaccumulation potential, and usually less drilling waste volume.

3. INDUSTRY PROFILE: HISTORIC AND PROJECTED DRILLING ACTIVITIES

The final regulation establishes discharge limitations for SBFs in areas where drilling fluids and drill cuttings are allowed for discharge. These discharge areas are the offshore waters beyond three miles from shore (excluding the offshore waters of Alaska which has no three mile discharge restriction), and the coastal waters of Cook Inlet, Alaska. Drilling is currently active in three regions in these discharge areas: 1) the offshore waters beyond three miles from shore in the Gulf of Mexico, 2) offshore waters beyond three miles from shore in California, and 3) the coastal waters of Cook Inlet, Alaska.

Table IV-1 presents the number of wells drilled in these three areas for 1995 through 1997. The table also separates the wells into four categories: shallow water development (SWD), shallow water exploratory (SWE), deep water development (DWD), and deep water exploratory (DWE). EPA uses these categories to identify model well characteristics for the control technology analyses described in later chapters of this document. EPA also uses these data to project the types of drilling activity in each geographic area (i.e., development versus exploratory) from drilling activity data provided by industry.

TABLE IV-1
NUMBER OF WELLS DRILLED ANNUALLY, 1995 - 1997, BY GEOGRAPHIC AREA

Data Source [a]		Shallow Water (<1,000 ft)		Deep Water (≥ 1,000 ft)		Total Wells
		Development	Exploration	Development	Exploration	
Gulf of Mexico						
MMS:	1995	557	314	32	52	955
	1996	617	348	42	73	1,080
	1997	726	403	69	104	1,302
	Average Annual	640	355	48	76	1,119
RRC [b]		5	3	NA	NA	8
Total Gulf of Mexico		**645**	**358**	**48**	**76**	**1,127**
Offshore California						
MMS:	1995	4	0	15	0	19
	1996	15	0	16	0	31
	1997	14	0	14	0	28
	Average Annual	**11**	**0**	**15**	**0**	**26**
Coastal Cook Inlet						
AOGC:	1995	12	0	0	0	12
	1996	5	1	0	0	6
	1997	5	2	0	0	7
	Average Annual	**7**	**1**	**0**	**0**	**8**

[a] Sources: MMS: Minerals Management Service, Ref. 3
RRC: Railroad Commission of Texas, Ref. 4
AOGC: Alaska Oil and Gas Commission, Ref. 5

[b] Data provided by the RRC did not distinguish between development and exploratory wells. EPA allocated the estimated 8 wells drilled annually in the Texas offshore area between development and exploratory wells in the same ratio that the average numbers of shallow water wells are distributed in the Gulf of Mexico MMS data.

Among these three areas, most historic drilling activity occurs in the Gulf of Mexico. As shown in Table IV-1, 1,127 wells were drilled in the Gulf of Mexico, on average, from 1995 to 1997, compared to 26 wells in California and 8 wells in Cook Inlet. In the Gulf of Mexico, over the last few years, there has been high growth in the number of wells drilled in deep water, defined as water greater than 1,000 feet deep. For example, in 1995, 84 wells were drilled in deep water, or 8.6 percent of all Gulf of Mexico wells drilled that year. By 1997, that number increased to 173 wells drilled, or over 13 percent of all Gulf of Mexico wells drilled. The increased activity in deep water increases the usefulness of SBFs. Operators drilling in deep water cite the potential for riser disconnect in floating drill ships, which favors SBF over OBF; higher daily drilling cost which more easily justifies use of more expensive SBFs over WBFs; and greater distance to barge drilling wastes that may not be discharged (i.e., OBFs).[3]

Nearly all exploration and development activities in the Gulf are taking place in the Western Gulf of Mexico, that is, the regions off the Texas and Louisiana shores. The Western Gulf Region also is associated with the majority of the current use and discharge of SBF cuttings.

For Federal waters of the Gulf of Mexico, EPA used annual well count data compiled by the Department of the Interior's Minerals Management Service (MMS).[3] The MMS data include wells drilled in offshore waters greater than 3 miles from shore, for all areas where drilling is active, except in Texas. The state of Texas has jurisdiction over oil and gas leases extending seaward three leagues (10.4 miles) instead of three miles. Therefore, EPA requested and received information from the Railroad Commission (RRC) of Texas regarding the number of wells drilled in Texas jurisdiction from three to 10.4 miles from shore. This area is affected by the final rule, but is not included in the MMS data.

Most production activity offshore California region is occurring in an area 3 to 10 miles from shore off of Santa Barbara and Long Beach, California. The MMS data indicate that five operators are actively drilling in the California Offshore Continental Shelf (OCS) region.[3]

Cook Inlet, Alaska, is divided into two regions, Upper Cook Inlet, which is in state waters and is governed by the coastal oil and gas effluent guidelines, and Lower Cook Inlet, which is considered Federal OCS waters and is governed by the offshore oil and gas effluent guidelines. All references to Cook Inlet in these SBF regulations mean Upper Cook Inlet unless otherwise identified. Currently there are three operators active in Cook Inlet.[7]

The offshore Alaska region comprises several areas, which are located both in state waters and in Federal OCS areas. The most active area for exploration has been the Beaufort Sea, the northern-most offshore area on the Alaska coastline. Other areas where exploration has occurred include Chukchi Sea to the northwest, Norton Sound to the West, Navarin Basin to the west, St. George Basin to the southwest, Lower Cook Inlet to the south, and Gulf of Alaska, along the Alaska panhandle. The only offshore commercial production is occurring in the Beaufort Sea region.

To EPA's knowledge, no operations are discharging any drilling fluids or cuttings in the offshore Alaska region. No SBF cuttings discharges are occurring under the current NPDES general for Cook Inlet. In the Federal offshore region, the offshore guidelines do not specifically prohibit discharge of SBF cuttings, but all operators historically have injected their drilling wastes. No commercial production has occurred in any Federal offshore area.

Since the beginning of exploration in the Alaska Offshore region, 82 exploratory wells have been drilled in Federal offshore waters, primarily in the Beaufort Sea, where nearly 40 percent of all exploratory wells in the Alaska Federal offshore region have been drilled.[8] Exploratory well drilling in Federal waters has slacked off significantly in recent years. From a peak of about 20 wells per year in 1985, no wells were drilled in 1994, 1995, and 1996, and two were drilled in 1997, for an average of less than one well drilled per year.[8] EPA assumes that no significant drilling activity will be occurring in the Federal offshore regions of Alaska. Offshore Alaska, therefore, is within the scope of the regulation but is not expected to be associated with costs or savings as a result of the effluent guidelines, either in state offshore waters (because of state law) or in Federal waters (due to historic practice and lack of drilling activity). Wells drilled in this region are not included in the count of potentially affected wells.

For the proposed rule, EPA estimates the numbers of wells drilled annually using WBF, OBF, and SBF in each geographic area, as presented in Table IV-2. Following are the assumptions and methods EPA used at proposal to estimate the well counts in Table IV-2.

- Total Gulf of Mexico WBF/SBF/OBF Wells: For the Gulf of Mexico, EPA estimated that 80% of the average annual wells were drilled using WBF exclusively (902 wells); 10% (113 wells) were drilled with SBF, and 10% (112) were drilled with OBF.[9]

- Gulf of Mexico SBF Wells: EPA learned that approximately 75% of all deep water wells in the Gulf of Mexico were drilled with either SBF or OBF.[10] Further, EPA learned that operators were reluctant to use OBF in deep water operations because of the possibility of riser disconnect.[6] For this reason, EPA determined that in deep water: no OBF wells were drilled; 75% used SBF, and 25% used WBF exclusively. Thus, EPA estimated that 36 of 48 DWD wells and 57 of 76 DWE wells were drilled with SBF annually. Subtracting the deep water wells from the 113 SBF wells yielded 20 SBF wells drilled in shallow water. The distribution of SWD and SWE wells drilled with SBF was made equal to the distribution of these well types in the total well population (i.e., 64% of shallow water wells were development, 36% were exploratory).

TABLE IV-2
ESTIMATED NUMBER OF WELLS DRILLED ANNUALLY
BY DRILLING FLUID USED FOR PROPOSED RULE

Drilling Fluid	Shallow Water (<1,000 ft)		Deep Water (≥ 1,000 ft)		Total Wells
	Development	Exploratory	Development	Exploratory	
Gulf of Mexico					
Total Wells	645	358	48	76	1,127
Well Using WBF (80%)	560	311	12	19	902
Wells Using SBF (10%)	13	7	36	57	113
Wells Using OBF (10%)	72	40	0	0	112
Offshore California					
Total Wells	11	0	15	0	26
Wells Using WBF	10	0	4	0	14
Wells Using OBF	1	0	11	0	12
Coastal Cook Inlet					
Total Wells	7	1	0	0	8
Wells Using WBF	6	1	0	0	7
Wells Using OBF	1	0	0	0	1

- Gulf of Mexico OBF Wells: Because EPA estimated that OBFs were not used in the deep water, all 112 OBF wells in offshore Gulf of Mexico were shallow water wells. The distribution of SWD and SWE wells drilled with OBF was made equal to the distribution of these well types in the total well population, as described above for SBF shallow water wells.

- Offshore California and Coastal Cook Inlet SBF/OBF Wells: EPA learned that no wells are currently drilled with SBF in offshore California and coastal Cook Inlet.[7] Therefore, all wells drilled in these areas were either WBF or OBF wells. The distribution of OBF wells drilled in shallow and deep waters was based on the distribution of OBF/SBF wells in Gulf of Mexico shallow and deep waters, as follows: 13.2% of shallow water wells were drilled with OBF; 75% of deep water wells were drilled with OBF. All other wells were assumed to be drilled exclusively with WBF.

- WBF Wells: The numbers of WBF wells distributed among the four model well types were simply the difference between the numbers of SBF/OBF wells and the total well population for a given model well. These numbers were presented for completeness, and did not appear in any further analysis in the document for the proposed rule. Also, the top portion of SBF and OBF wells were drilled with WBF, but this portion of the well was not included in EPA's proposed analysis.

- Existing versus New Sources: Based on the well information presented above and expansion of the industry into new lease blocks in the deep water areas of the Gulf of Mexico, EPA estimated that 5% of SWD and 50% of DWD wells that use SBFs would be new sources. Industry was unable to provide any more specific estimates. Thus, of the estimated 13 SWD wells drilled annually with SBF in the Gulf of Mexico, EPA estimated that one of these would be a new source. Of the estimated 36 DWD wells drilled annually, EPA estimated that 18 of these would be new sources. Exploratory wells, by definition, are not new source wells. EPA did not project any new source wells to be drilled in offshore California or coastal Cook Inlet, Alaska.

For the final rule, EPA has retained certain percentages noted above for various categories of wells, but has applied these where necessary to more recent estimates of industry activity. Thus, industry projected a total of 1,047 shallow water wells (including both new and existing sources) to be drilled in the Gulf of Mexico. Among these shallow water wells, 80% (836) were projected to be WBF wells, 6% (69) projected to be OBF wells, and 14% (142) projected to be SBF wells. Similarly, for 138 total deep water wells (including both new and existing sources), 43% (59) were projected to be WBF wells, 0% (0) projected to be OBF wells, and 57% (79) projected to be SBF wells. However, these industry projections allocated these well types neither into exploratory versus development wells, nor existing versus new source categories.

Therefore, the allocation of wells into exploratory versus development, existing versus new source, and WBF, OBF, or SBF well types was a three-stage process. First, EPA used the percentage allocations into exploratory and development well categories based on the projections developed for the proposed rule, as applied to the total shallow and deep water well counts provided by industry. Second, EPA also used its existing versus new sources percentages, as described in the proposed rule, to allocate wells into these well categories. Lastly, wells were allocated into the various mud types based on the projected percentages, as described above, provided by industry.

TABLE IV-3
ESTIMATED NUMBER OF EXISTING SOURCE WELLS DRILLED ANNUALLY BY WELL AND DRILLING FLUID TYPE FOR THE FINAL RULE [a]

Drilling Fluid Type	Region	Well Type				Total Wells
		SWD	SWE	DWD	DWE	
Baseline						
WBF SBF OBF	Gulf of Mexico	511 86 42	298 51 25	12 16 0	36 48 0	857 201 67
WBF SBF OBF	Offshore California	3 0 1	2 0 1	0 0 0	0 0 0	5 0 2
WBF SBF OBF	Cook Inlet, Alaska	3 0 1	1 0 1	0 0 0	0 0 0	4 0 2
BAT/NSPS Options 1 and 2						
WBF SBF OBF	Gulf of Mexico	479 124 25	279 74 15	11 17 0	34 49 0	803 264 40
WBF SBF OBF	Offshore California	3 0 1	2 0 1	0 0 0	0 0 0	5 0 2
WBF SBF OBF	Cook Inlet, Alaska	3 1 0	1 0 1	0 0 0	0 0 0	4 1 1
BAT/NSPS Option 3						
WBF SBF OBF	Gulf of Mexico	511 0 128	298 0 76	17 3 8	51 8 25	877 11 237
WBF SBF OBF	Offshore California	3 0 1	2 0 1	0 0 0	0 0 0	5 0 2
WBF SBF OBF	Cook Inlet, Alaska	3 0 1	1 0 1	0 0 0	0 0 0	4 0 2

[a] Source: Ref. No. 9.

TABLE IV-4
ESTIMATED NUMBER OF NEW SOURCE WELLS DRILLED ANNUALLY BY WELL AND DRILLING FLUID TYPE FOR THE FINAL RULE

Drilling Fluid Type	Region	Well Type				Total Wells
		SWD	SWE	DWD	DWE	
Baseline						
WBF	Gulf of Mexico	27	0	11	0	38
SBF		5	0	15	0	20
OBF		2	0	0	0	2
WBF	Offshore California	0	0	0	0	0
SBF		0	0	0	0	0
OBF		0	0	0	0	0
WBF	Cook Inlet, Alaska	0	0	0	0	0
SBF		0	0	0	0	0
OBF		0	0	0	0	0
BAT/NSPS Options 1 and 2						
WBF	Gulf of Mexico	25	0	10	0	35
SBF		8	0	16	0	24
OBF		1	0	0	0	1
WBF	Offshore California	0	0	0	0	0
SBF		0	0	0	0	0
OBF		0	0	0	0	0
WBF	Cook Inlet, Alaska	0	0	0	0	0
SBF		0	0	0	0	0
OBF		0	0	0	0	0
BAT/NSPS Option 3						
WBF	Gulf of Mexico	27	0	15	0	42
SBF		0	0	3	0	3
OBF		7	0	8	0	15
WBF	Offshore California	0	0	0	0	0
SBF		0	0	0	0	0
OBF		0	0	0	0	0
WBF	Cook Inlet, Alaska	0	0	0	0	0
SBF		0	0	0	0	0
OBF		0	0	0	0	0

Thus (with consideration of rounding effects), the 1,047 shallow water wells disaggregated into 673 (64.3%) development wells and 374 (35.7%) exploratory wells; the 673 development wells disaggregated into 639 (95%) existing and 34 (5%) new source wells (all exploratory wells are considered existing sources). These disaggregated well counts were then respectively allocated into WBF, OBF, and SBF well

types based on the 80%, 6%, and 14% allocations provided in industry's most recent activity projection. The same procedure was used to allocate the 138 deep water wells into 84 exploratory wells (61.3%) and 54 development wells, of which 28 were classified as existing sources and 26 new sources. Tables IV-3 and IV-4 summarize these well count allocations for existing and new sources, respectively.

In developing these well counts, EPA has considered the increased ability of operators using SBF to take advantage of directional drilling technology. Information received by EPA indicates that, compared to WBF, developing a reservoir using SBF would be expected to require one-third fewer wells (or reduce total drilled footage by one-third). Improved directional drilling allows fewer wells and/or less drilled footage because operators can reach pay zone targets at a greater deviation from a fixed location (or increase the drilled footage through a production zone).

Thus, for the final rule, the well counts under BAT/NSPS Options 1 and 2 have been adjusted. The projected number of WBF wells converting to SBF wells has been adjusted to reflect the ability to maintain comparable productivity with one-third fewer wells. Thus, the 54 WBF wells projected to convert to SBF result in an increase in the SBF well count of only 36 SBF wells. This results in a total SBF, SBF, and OBF well count of 1,125 existing source wells, under the baseline and BAT/NSPS Option 3, reducing to a total of 1,107 wells under BAT/NSPS Options 1 and 2.

4. REFERENCES

1. Baker, R., "A Primer of Offshore Operations," Second Edition, Petroleum Extension Service, University of Texas at Austin, 1985.

2. Confidential Business Information regarding subsea pumping system, 1998. (Record No. I.F.1)

3. U.S. Department of the Interior, MMS, Herndon, VA, TIMS Database, MMS 97-007, 1997.

4. Covington, J.C., EPA, Memorandum regarding well count data from the Railroad Commission of Texas, 6/15/98. (Record No. I.E.21)

5. Daly, J., EPA, Memorandum regarding "Phone Conversation Regarding Number of Wells Drilled in Cook Inlet, Alaska," 10/23/98. (Record No. I.C.a.1)

6. American Petroleum Institute, responses to EPA's "Technical Questions for Oil and Gas Exploration and Production Industry Representatives," attached to E-mail sent by M. Parker, Exxon Company, U.S.A., to J. Daly, EPA. 8/7/98. (Record No. I.C.c.1)

7. Veil, John A., Argonne National Laboratory, Washington, D.C., "Data Summary of Offshore Drilling Waste Disposal Practices," prepared for the U.S. EPA, Engineering and Analysis Division, and the U.S. Department of Energy, Office of Fossil Energy, November 1998. (Record No. (I.C.d.1)

8. U.S. EPA, “Economic Analysis of Proposed Effluent Limitations Guidelines and Standards for Synthetic-Based Drilling Fluids and other Non-Aqueous Drilling Fluids in the Oil and Gas Extraction Point Source Category,” EPA-821-B-98-020. 2/3/99. (Record No. II.D.1)

9. Henry, L., Chevron. Memorandum to C.A. Johnston, EPA, Response to EPA Request for Additional Input Parameter for EPA Modeling. 9/11/00. (Record No. IV.B.a.9)

CHAPTER V

DATA AND INFORMATION GATHERING

1. INTRODUCTION

This chapter describes the sources and methods EPA used to gather data and information for the final rule. The following sections discuss the data and information gathered concerning pollutant loadings and numeric limitation analyses; base fluid stock limitations; compliance costs; NWQEIs; compliance analytical methods; and seabed impact characterizations.

2. POLLUTANT LOADING AND NUMERIC LIMIT ANALYSES

2.1 SBF Retention on Cuttings

SBF retention on cuttings (ROC) data quantify the amount of SBF retained on cuttings (mass of SBF/mass of wet cuttings, expressed as a percentage). Lower ROC values indicate less SBF retained on cuttings. EPA uses ROC data, along with other engineering factors (e.g., installation requirements, fluid rheology) to evaluate the performance of various solids control technologies.

In response to the February 1999 proposal, industry submitted data for SBF ROC from 36 wells. EPA determined that 16 files were complete and accurate, and these data were presented in the April 2000 NODA. EPA rejected six files due to incomplete reporting. EPA received the remaining 14 files too late for inclusion in the NODA analyses.

In response to the NODA, EPA received and evaluated ROC data from an additional 79 SBF wells: the 14 received after the February 1999 proposal comment period; 27 additional sets received during the NODA comment period; and 38 received after the NODA comment period. EPA has determined that data from 49 of these 79 wells are sufficiently complete for inclusion in the final rule analyses. Therefore, EPA uses data from 65 wells to characterize ROC performance of the various solids control technologies. EPA bases its determination of average ROC values of various solids control technologies on this final, 65-well data set. These revised average ROC values are combined to yield weighted average ROC values

(weighting factors based on the relative contribution of each treatment unit to the final, composite waste stream) for the following three primary SBF-cuttings technology options:

- BAT/NSPS (Discharge) Option 1 is based on: the use of shale shakers, cuttings dryers, and fines removal units; inclusion of discharges from both cuttings dryers and fines removal units in the development of final effluent limitations guidelines; and a combined, long-term average ROC value of 4.03%.

- BAT/NSPS (Discharge) Option 2 is based on: the use of shale shakers, cuttings dryers, and fines removal units; inclusion of only one discharge, from cuttings dryers, in the development of final effluent limitations guideline; and a long-term average ROC value of 3.82%.

- BAT/NSPS (Zero Discharge) Option 3 requires no discharge of SBF or SBF cuttings and is based on: the use of shale shakers (with a long-term average ROC value of 10.2%), cuttings boxes, barges, and trucking to achieve zero discharge via land disposal; or onsite disposal that uses cuttings grinding systems and injection into subseabed formations offshore.

In addition, using the ROC data, EPA developed two BAT/NSPS limitations and standards that control the amount of base fluid retained on cuttings for drilling fluids either (a) with the environmental performance of esters (e.g., biodegradation, sediment toxicity) or (b) with the environmental performance of C_{16}-C_{18} internal olefins. EPA is using this approach to provide operators an incentive to use ester-SBFs or equivalent fluids because they provide better environmental performance. EPA uses ROC data on four cuttings dryer technologies (vertical and horizontal centrifuges; squeeze presses; and High-G linear shakers) to base the discharge limitation and standard for SBFs that comply with stock limitations based on esters (i.e., a long-term average ROC of 4.8% and a discharge limitation and standard of 9.4%). EPA uses ROC data on the two better performing technologies (vertical and horizontal centrifuges) to base the discharge limitation and standard for SBFs that comply with the stock limitations based on C_{16}-C_{18} internal olefins (i.e., a long-term average ROC of 3.82% and a discharge limitation and standard of 6.9%). The base fluid retention-on-cuttings limitation and standard both incorporate the variability of solids control efficiencies and are higher than the long-term average for both esters and C_{16}-C_{18} internal olefins.

2.2 Days to Drill

EPA uses the number of days to drill the SBF interval, for all four model wells, as an input parameter in the NWQI and cost analysis. EPA extracted relevant data from each of the 65 wells identified above to estimate the number of days to drill each of the four model well SBF intervals.[1] For each well type, the SBF interval volume was determined as well as the number of days to drill the respective interval. The average interval volume over all intervals was then calculated, and a 7.5% washout factor for SBF was added to this average interval volume. The average interval volume plus washout (1,050 bbl) is divided by the average number of days to drill (9.65) to obtain the revised average rate of SBF-cuttings generation (i.e., 108.7 bbls wet cuttings/day). Each of the model well-type volumes is divided by the cuttings generation rate to obtain the number of days to drill. The revised numbers of days required to drill the SBF model wells are: (1) 5.2 days for shallow-water development wells (SWD); (2) 10.9 days for shallow-water exploratory wells (SWE); (3) 7.9 days for deep-water development wells (DWD); and (4) 17.5 days for deep-water exploratory wells (DWE).

2.3 Well Count Projections Over Next Five Years

EPA revised annual well count projections for offshore Gulf of Mexico, offshore California, and Cook Inlet, Alaska based on information submitted post-NODA by industry.[2, 3, 4] The revised annual well counts for the baseline are 1,047 shallow water wells and 138 deep water wells in offshore Gulf of Mexico; 7 shallow water wells and no deep water wells in offshore California; and 6 shallow water wells and no deep water wells in Cook Inlet, Alaska. These revised well counts are not significantly different from the well counts used in the proposed rule and the NODA (i.e., see SBF Proposal Development Document; Table IV-2: 1,022 shallow water wells and 139 deep water wells across the Gulf of Mexico, offshore California, and Cook Inlet, Alaska).

Industry provided well-type data (i.e., SBF, OBF, or WBF well counts), but only provided these well counts as shallow water wells or deep water wells and provided actual well counts for the baseline. EPA required industry's revised well counts categorized into both development versus exploratory wells and existing source versus new source wells for the baseline and all options to estimate pollutant loadings, compliance costs, and NWQEIs. EPA performed the development versus exploratory allocation using prior well count data from the NODA. EPA derives percentages of development versus exploratory wells for both shallow water wells (64.3% and 35.7%, respectively) and deep water wells (38.7% and 61.3%, respectively) based on the well counts projected in the NODA. EPA then applies these percentages to the revised aggregated shallow water and deep water well counts provided by industry. EPA made existing

source versus new source allocations based on the same assumptions as in the NODA, i.e., a 50% existing source/50% new source allocation for development wells and a 100% existing source/0% new source allocation for exploratory wells (which by definition, are drilled from existing sources).

Thus, industry provided baseline counts of 138 total deep water wells (i.e., both existing source and new source) consisting of 79 SBF, no OBF, and 59 WBF wells. The 79 SBF wells are allocated 38.7% to development (31 wells) and 61.3% to exploration (48 wells); the 31 development wells are allocated 50% each (with rounding considerations) to existing source (16 wells) and new source (15 wells); all 48 of the exploratory wells are classified as existing sources. This same approach is used for all other total baseline deep water and shallow water total baseline well counts (i.e., both existing and new source wells) provided by industry: 59 WBF and no OBF deep water wells; 142 SBF, 69 OBF, and 836 WBF shallow water well counts.

EPA also revised well count projections to reflect enhanced directional drilling capabilities when using SBF. EPA received information that SBF directional drilling can reduce the number/total footage of wells required to develop a project. This results from several properties of SBF (increase rate of penetration, increased lubricity, fewer stuck pipe) whereby operators are able to successfully drill at much greater deviations, resulting in greater penetration of productive zones in target formations. Thus, industry can develop the same reservoir with fewer wells and/or less footage drilled than would be required using WBF. Industry indicated that SBF development drilling can generally reduce by one-third the total drilled footage required for full development of typical reservoir[2] and EPA has included this consideration by commensurately reducing the count of SBF wells resulting from conversion of development wells to SBF wells under the two controlled discharge options.

2.4 Current and Projected OBF, WBF, and SBF Use Ratios

For proposal and NODA, EPA estimated that 80% of the average annual Gulf of Mexico wells are drilled using WBF exclusively; 10% are drilled with SBF; and 10% are drilled with OBF. EPA also included in well counts estimates of operators converting from OBF to SBF or SBF to OBF under each of the SBF-cuttings controlled discharge options.

For the final rule, EPA revises the relative frequency of use for WBF, OBF, and SBF under the two discharge options and the zero discharge option based on data submitted by industry.[2, 3, 4] Industry supplied this information to EPA in several formats. EPA uses what it considers the most reliable

information (e.g., a review of the actual well count data for WBF, OBF, and SBF wells over a period of three years) to estimate drilling fluid use under each of the SBF-cuttings control options.

Based on these industry well count data, EPA projects that some operators would also switch from WBFs to SBFs for certain wells due to the increased efficiency of SBF drilling. While no extensive good industry average statistics exist, it is generally considered that SBFs reduce overall drilling time by 50% (e.g., if a well took 60 days to drill with WBF, the same well should be able to be drilled with SBF in 30 days).[2, 3, 4] Reduced drilling time is expected to result in reduced drilling costs. However, not all drilling operators will switch from WBFs to SBF due to a variety of other factors, (e.g., WBFs are less expensive [per barrel] than SBFs, potential for lost circulation downhole). The result of EPA's analysis of these industry submissions is that 40% of OBF wells are projected to convert to SBF under BAT Options 1 and 2; for WBF wells, a 6.25% conversion rate is projected.

Additionally, based on industry data EPA projects that under the SBF-cuttings zero discharge option, not all operators would switch from SBFs to OBFs but that some operators would switch to WBFs. Some drilling operations require the technical performance of non-aqueous drilling fluids and operators must select either an OBF or SBF. Therefore, for these drilling operations, operators would select OBFs in place of SBF under the SBF-cuttings zero discharge option as OBFs are less expensive (per barrel) than SBFs. However, some drilling operations could use either WBFs or oleaginous drilling fluids such as OBFs, enhanced mineral oil based drilling fluids, or SBFs. Depending on a variety of site specific factors (e.g., formation characteristics, directional drilling requirements, torque and drag requirements), operators may select WBFs in lieu of SBFs or OBFs under the SBF-cuttings zero discharge option.

Industry provided the observation that relative WBF/OBF/SBF usage would remain unchanged as it was a mature technology. However, EPA noted that data provided by industry at the same time indicated a different pattern. For example, from 1998 to 2000 OBF usage decreased consistently, respectively 14%, 9%, and 7% in shallow water and 12%, 8%, and 6% overall. SBF usage fluctuated in shallow water, going from 13% to 8% to 14%, but consistently increased in deep water, from 50% to 51% to 57%, and overall ranged from 16% to 14% to 19%. WBF mirrored that of SBF, i.e., showed a consistent decrease in deep water (50% to 49% to 43%) but fluctuated in shallow water from 74% to 83% to 80%. EPA projects that SBF usage will continue to rise relative to WBF and OBF for several reasons.

There are clear operational advantages for SBF compared to WBF in many drilling situations and clear environmental and health and safety advantages over diesel or mineral oil base fluids. Another advantage of SBF is the shorter duration of drilling program using SBF compared to WBF, as well as an

increased capability to utilize directional drilling technology to reduce the number of wells and/or total footage required to develop a reservoir. In addition, the patterns of usage in deep water environments, in which the industry expects to heavily invest future resources, clearly show an increased usage of SBF. EPA projects, therefore that usage patterns will change for WBF/OBF/SBF. EPA recognizes that well count projection data are sparse, and a well-characterized and highly reliable projection would be difficult. EPA believes, for the reasons enumerated above, however, that a change to increased SBF usage is highly likely. As a conservative approach, therefore, EPA is revising its initial model of WBF/OBF/SBF usage under BAT/NSPS Options 1 and 2 (i.e., 80/10/10) to reflect the year 2000 projection provided by industry. To do so, EPA is adjusting the well counts by the relative percentage difference between its initial 80/10/10 allocation and the year 2000 allocation of 75/6/19. (Note: the submitted data, due to rounding, was reported 76/6/19, which sums to 101%. The 3-year WBF utilization averaged 75%, so the WBF allocation was adjusted by 1% to give the allocation used in EPA's analysis.)

To effect this re-allocation, the relative percentage change in WBF and OBF usage was calculated and applied to baseline well counts. That is, the change from initial 10% OBF allocation to a 6% allocation represents a 40% reduction (4%/10%) in OBF wells; the reduction from 80% to 75% represents a 6.25% reduction in the WBF well count (5%/80%). These reductions result in a net conversion to SBF of 81 wells -- 27 from OBF and 54 from WBF. This well count is further adjusted to take into consideration the improved ability to drill directionally and develop reservoirs with fewer wells and/or total footage which produces a net decrease of 18 total wells (i.e., all from the one-third reduction of the well count for WBF wells converting to SBF). Thus, the 1,185 total baseline and BAT/NSPS Option 3 Gulf of Mexico wells reduce to 1,167 BAT/NSPS Option 1 or 2 wells.

2.5 Waste Volumes and Characteristics

EPA collected additional data to identify the volumes and characteristics of WBF discharges. This additional data more adequately describes the total amount of pollutants loadings and NWQEI under each of the three SBF-cuttings management options. For example, under the SBF zero discharge option (BAT/NSPS Option 3), operators would more likely choose WBF and OBF over SBF due primarily to the relatively higher unit cost of SBF.

Different pollutant loadings and NWQEI are expected for WBF as compared with either OBF or SBF wells based on differences in washout and length of drilling time. EPA anticipates a reduction in cuttings waste volume when comparing SBF-drilling to WBF-drilling based on greater hole washout (i.e., enlargement) in WBF drilling. Industry estimated that WBF washout percentages vary between 25% and

75%, with 45% being an acceptable average and confirmed EPA's SBF and OBF washout percentage of 7.5% as appropriate.[2]

For the final rule, EPA also estimated that the barite used in SBF drilling is nearly pure barium sulfate (i.e., $BaSO_4$) and, by gravimetric analysis, calculated the weight percentage of barium in barite as 58.8%.

3. COMPLIANCE COSTS ANALYSES

3.1 Equipment Installation and Downtime

For the NODA, projected compliance costs for all options included equipment installation and downtime for each SBF well drilled. After reviewing ROC data sets submitted in response to the NODA, EPA modified this parameter in the final analyses to reflect current practice of drilling multiple wells for any one equipment installation.[2] EPA reviewed the ROC well data for the frequency of multiple wells on specified structures. EPA used the resulting well-per-structure analysis to adjust projected annual SBF compliance costs by including the consideration of drilling more than one SBF well per equipment installation per year. EPA estimated that 2.2 development wells per structure and 1.6 exploratory wells per structure are current industry practice, based on industry-submitted data.[5]

Industry also submitted estimates of the number of wells drilled per structure.[6] EPA's estimates result in a more conservative cost projection than industry's estimates of 3 wells per structure in deep water and 4 wells per structure in shallow water.

EPA also received information on the ability of operators to install cuttings dryers (e.g., vertical or horizontal centrifuges, squeeze press mud recovery units, High-G linear shakers) on existing Gulf of Mexico rigs.[7] While some industry sources filed timely comments alleging that some rigs could not accommodate additional solids control equipment, in late comments, industry provided additional comments concerning the number of Gulf of Mexico rigs in operation which are not capable of having a cuttings dryer system installed due to either rig space and/or rig design without prohibitive costs or rig modifications.

EPA also requested comments in the NODA on the issue of rig compatibility with the installation of cuttings dryers (e.g., vertical or horizontal centrifuges, squeeze press mud recovery units, High-G linear shakers). EPA received general information on the problems and issues related to cuttings dryer installations from API/NOIA stating that not all rigs are capable of installing cuttings dryers.[6] In late comments, some

industry commentors asserted that 48 of the 223 GOM drilling rigs are not capable of having a cuttings dryer system installed due to either rig space and/or rig design without prohibitive costs or rig modifications.[7] Upon a further, more extensive review of Gulf of Mexico rigs, these same commentors asserted that 30 of 234 Gulf of Mexico drilling rigs are not capable of having a cuttings dryer system installed due to either rig space and/or rig design without prohibitive costs or rig modifications.[8] EPA also received late comments from one operator, Unocal, stating that 36 of 122 Unocal wells drilled between late 1997 and mid-2000 were drilled with rigs that do not have 40 foot x 40 foot space available which they assert is necessary for a cuttings dryer installation.[9] The API/NOIA rig survey and the Unocal rig survey identified most of the same rigs as unable to install cuttings dryers. However, two rigs (i.e., Parker 22, Nabors 802) identified in the Unocal rig survey as having no space for a cuttings dryer installation were identified in the API/NOIA rig survey as having a previous cuttings dryer installation. Unocal requested in late comments that EPA subcategorize certain rigs from being subject to the retention limit or that these rigs be able to discharge SBFs using performance that reflects current shale shaker technology.

Based on the record, EPA finds that current space limitations for cuttings dryers do not require a 40 foot x 40 foot space. Specifically, EPA has in the record information gathered during EPA's October 1999 site visit and information supplied by API/NOIA and equipment vendors. Also, EPA received information from a drilling fluid manufacturer and cuttings dryer equipment vendor, M-I Drilling Fluids, stating that they are not aware of any Gulf of Mexico rig not capable of installing a cuttings dryer.[10] API/NOIA estimated that 150 square feet are required for a cuttings dryer installation in order to meet the ROC BAT limitation and NSPS. EPA also estimates that the minimum height clearance for a typical cuttings dryer installation is 6 feet. The API/NOIA estimate is based on the installation of a horizontal centrifuge cuttings dryer. The Unocal estimate is based on the vertical centrifuge cuttings dryer and is also characterized by other industry representatives as too high.[8] EPA's estimate of a typical vertical centrifuge installation is 15 feet x 15 feet with a minimum height clearance of 11 feet. EPA based the ROC BAT limitation and NSPS (e.g., 6.9%) on the use of both these cuttings dryers for SBFs with the stock limitations of C_{16}-C_{18} IOs. Based on comments from operators and equipment vendors, EPA believes that most of these shallow well rigs have the requisite 160-225 square feet available to install a cuttings dryer. Therefore, EPA finds that operators are not required to have a 1,600 square foot space for a cuttings dryer installation in order to meet the ROC BAT limitation and NSPS. Proper spacing and placement of cuttings dryers in the solids control equipment system should prevent installation problems.

Because of the large discrepancy between EPA's record information and the space requirements asserted by the commenter (1,600 square feet versus EPA's 225 square feet + 11 feet in height for the

vertical centrifuge or 150 square feet + 6 feet in height for the horizontal centrifuge - MUD-6), EPA does not necessarily believe that there are as many wells that cannot install cuttings dryers.

EPA also received information on a new cuttings containment, handling, and transfer equipment system. The new system is designed to eliminate the need to use cuttings boxes to handle cuttings. EPA received information from one operator that recently field tested the cuttings transfer system on one 12¼ inch well section in the North Sea. The operator contained 100% of the cuttings on a rig (Alba) with limited deck space. Cuttings were handled in bulk below deck and pumped directly onto a waiting vessel for eventual land disposal. The operator estimated that use of the new cuttings transfer system eliminated hundreds of crane lifts and manual handling issues and thereby improved worker safety.

3.2 Current Drilling Fluid Costs

In response to the NODA, EPA received new information and revised unit costs of WBF, OBF, and SBF. Based on industry data, EPA estimates WBF at a unit cost of $45 per barrel for the final rule. The proposed rule and NODA used OBF and SBF unit costs of $75 and $200 per barrel of drilling fluid, respectively. More recent industry data indicate a range of OBF unit costs from $70 - $90 per barrel; EPA uses an OBF unit cost of $79 per barrel for the final rule.[11] Based on industry data submissions, EPA estimates that SBF unit costs will remain between $160 to $300 per barrel of drilling fluid over the next few years, and uses an SBF unit cost of $221 per barrel of drilling fluid for the final rule based on the most frequently used SBF in the offshore market (see Section 3.3.2 of Chapter VIII for further detail on unit cost derivation).

3.3 Cost Savings of SBF Use as Compared with WBF Use

EPA revised its compliance costs/savings to include the following factors: (1) the cost savings associated with decreased length of drilling programs when using SBF as compared to WBF; (2) the cost of lost WBFs that are discharged while drilling; and (3) the costs associated with projected failures of a fraction of WBF wells to meet sheen or toxicity limitations, including costs of meeting zero discharge from these wells. EPA used these data to examine compliance costs impacts of operators converting to or from SBF from or to WBF.

EPA requested data from industry on rate of penetration (ROP) for WBF operations as compared to SBF operations. Industry stated that ROP values of 300 feet per hour for SBF (and OBF) operations and 150 feet per hour for WBF are reasonable averages. However, using these values over an entire well

was not recommended "due to the large number of variables."[2] Industry's information further states that a generally-accepted estimate is that "SBFs reduce overall drilling time by 50%"[2] and is due not only to greater ROP but decreased incidence of stuck pipe and other operational difficulties (e.g., lost circulation, bore hole integrity, etc.).

3.4 Construction Cost Index

EPA used the Construction Cost Index (CCI) from the Engineering News and Record[12] to reflect costs in 1999 dollars rather than 1998 dollars as was used for the NODA. EPA used a CCI factor of 1.108 to reflect 1999 dollars and a base year of 1995.

4. NON-WATER QUALITY ENVIRONMENTAL IMPACT ANALYSES

EPA received additional data relating to the NWQEI analyses in response to the NODA. These data include additional information on retention on cuttings and information regarding offshore injection and onshore disposal practices for each of the three geographical areas: Gulf of Mexico, offshore California, and Cook Inlet, Alaska.

EPA revised the average SBF retention on cuttings for the two discharge options based on additional ROC data. Revisions in ROC data affect the volume of SBF-cuttings generated. Consequently, EPA revised the amount of SBF-cuttings that will need to be treated under the two SBF-cuttings controlled discharge options (e.g., BAT/NSPS Options 1 and 2). EPA also revised: (1) the amount of SBF-fines that will need to be re-injected on-site or hauled to shore for disposal under one of the SBF-cuttings controlled discharge option (e.g., BAT/NSPS Options 2); and (2) the amount of SBF-fines and SBF-cuttings injected onsite or hauled to shore for disposal under the zero discharge option (BAT/NSPS Options 3).

EPA received additional SBF well interval data which was used to re-calculate the number of days to drill the model SBF wells. For the NWQI analyses, the number of days to drill the model wells serves as the basis for estimating the length of time equipment will be used to either treat the cuttings before discharge or the hauling requirements under the zero discharge option. The EPA NWQI models estimate that air emissions and fuel use rates increase when the time required to complete a model well also increases.

EPA obtained information regarding the current practice of zero discharge disposal for each of three geographic areas, Gulf of Mexico, offshore California, and Cook Inlet, Alaska. Current practice indicates that most of the waste generated in the Gulf of Mexico and offshore California and brought to shore is

injected onshore, whereas all of the waste currently generated in Cook Inlet is injected offshore at the drilling site or at a near-by Class II UIC disposal well. EPA also received from an onshore injection facility specific equipment information, including the cuttings injection rate and cuttings grinding and injection equipment power requirements and fuel rates.[13]

Industry provided EPA with information regarding SBF use. One operator (Unocal) stated that it is starting to use SBF to drill the entire well and not just intervals in which WBFs present problems because drilling time can be significantly reduced. EPA incorporated this information into the NWQI analyses by estimating the reduction of impacts when using SBFs instead of WBFs. EPA also received during the NODA comment period information related to the average increase in drilling time (1.5 days) in order to comply with zero discharge.[14]

5. COMPLIANCE ANALYTICAL METHODS

EPA completed additional studies in response to the NODA to support the development of analytical methods for determining sediment toxicity, biodegradation, and oil retention on cuttings. For sediment toxicity and biodegradation, EPA focused specifically on optimizing test conditions (e.g., test duration, sediment composition), discriminatory power, reproducibility, reliability, and practicality. EPA's sediment toxicity study provided toxicity data for both pure base fluids and standard mud formulations of these base fluids. EPA's biodegradation study evaluated the degradation of pure base fluids as determined by the solid phase test. For oil retention on cuttings, EPA conducted studies to verify and document the sensitivity of the retort test method.

During this same time period, industry sponsored Synthetic Based Muds Research Consortium (SBMRC) conducted parallel studies on the same three parameters (i.e., sediment toxicity, biodegradation, and base fluid retention on cuttings). For sediment toxicity, industry provided extensive data comparing a 4-day versus a 10-day test duration, natural versus synthetic sediments, as well as toxicity data on both pure base fluids and mud formulations of these base fluids. For biodegradation, industry submitted results from the closed bottle and respirometry tests for biodegradation in addition to the solid phase test. For oil retention on cuttings, Industry and EPA conducted rig-based method detection limit studies.

6. SEABED SURVEYS

EPA received public comments regarding the impact of SBF discharges on the benthic environment. EPA also received information on the on-going joint industry/MMS Gulf of Mexico seabed survey. The

Industry/MMS workgroup completed the first two cruises of the four cruise study in time for EPA's consideration for this final rule. Cruise 1 was a physical survey of 10 Gulf of Mexico shelf locations, with the objective of detection and delineation of cuttings piles using physical techniques. Cruise 2 was to scout and screen the final 5 shelf and 3 deep water Gulf of Mexico wells chosen for the definitive study where SBF were used. The SBF-cuttings discharges included either internal olefins or LAO/ester blends. Both cruises did not detect any large mounds of cuttings under any of the rigs or platforms. Remotely operated vehicles (ROV) using video cameras and side-scanning sonar were used to conduct the physical investigations on the seabed. Video investigations only detected small cuttings clumps (<6") around the base of some of the facilities and 1" thick cuttings accumulations on facility horizontal cross members. Outside of a 50-100' radius from the facility, no visible cuttings accumulations (large or small) were detected at any of the facility survey sites.

Finally, EPA received a report prepared for the MMS which provided a review of the scientific literature and seabed surveys to determine the environmental impacts of SBFs.[15] The literature report confirms EPA's position that benthic communities will recover as SBF concentrations in sediments decrease and sediment oxygen concentrations increase. The report also confirms EPA's position that within three to five years of cessation of SBF cuttings discharges, concentrations of SBFs in sediments will have fallen to low enough levels and oxygen concentrations will have increased enough throughout the previously affected area that complete recovery will be possible.

7. REFERENCES

1. Orentas, N. 2000. Email to B. Vanatta, ERG, Revised days to drill. 8/28/00. (Record No. IV.B.a.7)

2. Henry, L., Chevron. Memorandum to C.A. Johnston, EPA. Response to EPA Request for Additional Input Parameter for EPA Modeling. 9/11/00. (Record No. IV.B.a.9)

3. Farmer, J.M., BPAmoco. Email to C.A. Johnston, EPA. Response to EPA Request for Additional Input Parameter for EPA Modeling. 9/9/00. (Record No. IV.B.a.10)

4. Ressler, J., Unocal. Email to C.A. Johnston, EPA. Response to EPA Request for Additional Input Parameter for EPA Modeling. 9/11/00. (Record No. IV.B.a.11)

5. Avanti. 2000. Memorandum to File, Assessment of Numbers of Wells Drilled per Structure in the Gulf of Mexico. 9/18/00. (Record No. IV.B.a.14)

6. Moran, R., National Ocean Industries Association, Re: National Ocean Industries Association, American Petroleum Institute, Offshore Operators Committee, and Petroleum Equipment Suppliers Association Comments on "Effluent Limitations Guidelines for Oil and Gas Extraction Point Source Category," Proposed Rule 65 FR 21548 (April 21, 2000). 6/20/00. (Record No. IV.A.a.13)

7. Angelle, R. and P. Scott. 2000. Rig Survey Related to Installation Cost and Operational Costs of "Cuttings Dryers" to Reduce the Retention of Synthetic Based Mud on Cuttings Discharge. (Record No. IV.B.b.33)

8. Angelle, R. and P. Scott. 2000. Rig Survey Update Focusing on the Number of Rigs/Platforms Where Cuttings Dryers Could Not be Installed. Prepared by the Technology Assessment Workgroup of Synthetic Based Mud Research Consortium (API and NOIA) in Conjunction with Cuttings Dryer Equipment Vendor Representatives. 11/9/00. (Record No. IV.B.b.34)

9. O'Donnell, K., Unocal. 2000. Letter to M. Rubin, EPA transmitting additional information. 10/26/00. (Record No. IV.B.b.31)

10. Candler, J., M-I Drilling Fluids. Email to C. Johnston, EPA concerning ability of service companies to place cuttings dryers on rigs. 11/10/00. (Record No. IV.B.b.32)

11. Candler, J., M-I Drilling Fluids. Email to C.A. Johnston RE: unit costs for various muds. 10/23/00. (Record No. IV.B.a.13)

12. http://www.enr.com/cost/costcci.asp (Record No. IV.B.a.12)

13. Johnston, C.A., EPA. Memorandum to File, On-shore Formation Injection Disposal Non-Water Quality Environmental Impact Input Parameters. 6/20/00. (Record No. IV.D.2)

14. Van Slyke, Don, Unocal. Unocal Comments; Effluent Limitations Guidelines for the Oil and Gas Extraction Point Source Category; Proposed Ruling (40 CFR 435). 6/9/00. (Record No. IV.A.a.3)

15. Neff, J.M., S. McKelvie and R.C. Ayers. 2000. A Literature Review of Environmental Impacts of Synthetic Based Drilling Fluids, Draft. Report to USDOI, MMS. 4/27/00. (Record No. IV.F.1)

CHAPTER VI

SELECTION OF POLLUTANT PARAMETERS

1. INTRODUCTION

This section presents information concerning the selection of the pollutants to be limited for the SBF Effluent Limitations Guidelines and Standards. The information consists of identifying the pollutants for which limitations and standards have been promulgated. The discussion is presented in terms of the pollutant parameters associated with either the stock base fluids that are used to formulate the SBFs, or the drilling fluids and cuttings at the point of discharge.

2. STOCK LIMITATIONS OF BASE FLUIDS

2.1 General

EPA is establishing BAT and NSPS that require the synthetic materials and other oleaginous materials which form the base fluid of the SBFs and other non-aqueous drilling fluids to meet limitations on PAH content, sediment toxicity, and biodegradation. The technology basis for meeting these limits would be product substitution, zero discharge based on land disposal or injection if these limits are not met, or use of traditional drilling fluids under existing requirements. These parameters are being regulated to control the discharge of certain toxic and nonconventional pollutants. A large range of synthetic, oleaginous, and water miscible materials have been developed for use as base fluids. These stock limitations on the base fluid are intended to encourage product substitution reflecting the best available technology of using those synthetic materials and other base fluids which minimize potential loadings and toxicity.

EPA is promulgating BAT, and NSPS for SBFs and SBF-cuttings for Coastal Cook Inlet, Alaska as zero discharge except when Coastal Cook Inlet, Alaska, operators are unable to dispose of their SBF-cuttings using any of the following disposal options: (1) on-site injection (annular disposal or Class II UIC); (2) injection using a nearby Coastal or Offshore Class II UIC disposal well; (3) onshore disposal using a nearby Class II UIC disposal well or land application. The regulated toxic, conventional, and nonconventional pollutant parameters are identified below.

2.2 Base Fluid PAH Content

EPA is regulating the PAH content of base fluids because PAHs consist of toxic priority pollutants. SBF base fluids typically do not contain PAHs, whereas the traditional OBF base fluids of diesel and mineral oil typically contain on the order of 5% to 10% PAH in diesel oil and 0.35% PAH in mineral oil.[1] The PAHs typically found in diesel and mineral oils include the toxic priority pollutants fluorene, naphthalene, phenanthrene, and others, and nonconventional pollutants such as alkylated benzenes and biphenyls.[2] Therefore, the BAT limitation and NSPS for PAHs are components of the final regulation which help discriminate between acceptable and non-acceptable base fluids.

2.3 Base Fluid Sediment Toxicity

EPA is also regulating the sediment toxicity in base fluids as a nonconventional pollutant parameter and as an indicator for toxic pollutants of base fluids (e.g., enhanced mineral oils, internal olefins, linear alpha olefins, poly alpha olefins, paraffinic oils, C_{12}-C_{14} vegetable esters of 2-hexanol and palm kernel oil, "low viscosity" C_8 esters, and other oleaginous materials.)[3] It has been shown, during EPA's development of the Offshore Guidelines, that establishing limits on toxicity encourages the use of less toxic drilling fluids and additives. Many of the SBF base fluids have been shown to have lower sediment toxicity than OBF base fluids, but among SBFs some are more toxic than others.[4, 5, 6] The selected discharge option (i.e., BAT/NSPS Option 2) includes a base fluid sediment toxicity stock limitation, as measured by the 10-day sediment toxicity test (ASTM E1367-92) using a natural sediment or formulated sediment and *Leptocheirus plumulosus* as the test organism.

2.4 Base Fluid Biodegradation

EPA is also regulating biodegradation of base fluids as an indicator of the extent, in both level and duration, of the adverse effects of toxic and nonconventional pollutants present that are in base fluids (e.g., enhanced mineral oils, internal olefins, linear alpha olefins, poly alpha olefins, paraffinic oils, C_{12}-C_{14} vegetable esters of 2-hexanol and palm kernel oil, "low viscosity" C_8 esters, and other oleaginous materials). Based on results from seabed surveys at sites where various base fluids have been discharged with drill cuttings, EPA believes that the results from the three biodegradation tests used during the rulemaking (e.g., solid phase test, anaerobic closed bottle biodegradation test, respirometry biodegradation test) are indicative of the relative rates of biodegradation in the marine environment. In addition, EPA believes biodegradation correlates strongly with the rate of recovery of the seabed where OBF- and SBF-cuttings have been discharged. The various base fluids vary widely in biodegradation rates, as measured by the three

biodegradation methods.[6] However, the relative ranking of the base fluids under consideration remain similar across all three biodegradation tests investigated under this rulemaking.

As originally proposed in February 1999 (64 FR 5504) and re-stated in April 2000 (65 FR 21550), EPA is today promulgating a BAT limitation and NSPS to control the minimum amount of biodegradation of base fluids. Today's final discharge option (i.e., BAT/NSPS Option 2) includes a base fluid biodegradation stock limitation, as measured by the marine anaerobic closed bottle biodegradation test (i.e., ISO 11734).

2.5 Base Fluid Bioaccumulation

EPA also considered establishing a BAT limitation and NSPS that would limit the base fluid bioaccumulation potential. The regulated parameters would be the nonconventional and toxic priority pollutants that bioaccumulate. EPA reviewed the current literature to identify the bioaccumulation potential of various base fluids. After this review EPA determined that SBFs are not expected to significantly bioaccumulate because of their extremely low water solubility and consequent low bioavailability. Their propensity to biodegrade makes them further unlikely to significantly bioaccumulate in marine organisms.

EPA identified that hydrophobic chemicals (e.g., ester-SBF base fluids) that have a log K_{ow} less than approximately 3 to 3.5 may bioaccumulate rapidly but not to high concentrations in tissues of marine organisms, particularly if they are readily biodegradable into non-toxic metabolites.[3] [Note: the octanol/water partition coefficient (K_{ow}) is used as a surrogate for estimating bioaccumulation in biological lipid components. Moreover, hydrophobic chemicals (e.g., C_{16}-C_{18} internal olefins, various poly alpha olefins, and C_{18} n-paraffins) with a log K_{ow} greater than about 6.5 to 7 do not bioaccumulate effectively from the water phase primarily, because their solubility, hence mobility, in the water phase is very low.[3] Finally, the degradation by-products of SBF base fluids (e.g., alcohols) are likely to be more polar (i.e., more miscible with water) than the parent substances. The higher water solubility will result in these degradation by-products partitioning into the water column, but should quickly be diluted to toxicologically insignificant concentrations.

Based on current information, EPA believes that the stock base fluid controls on PAH content, sediment toxicity, and biodegradation rate being promulgated today are sufficient to only allow the discharge of base fluids (e.g., esters, internal olefins) with lower bioaccumulation potentials (i.e., log $K_{ow} < 3$ to 3.5 and log $K_{ow} > 6.5$ to 7).

3. DISCHARGE LIMITATIONS

3.1 Free Oil

Under BPT and BCT limitations for SBF-cuttings, EPA retains the prohibition on the discharge of free oil as determined by the static sheen test (see Appendix 1 of Subpart A of 40 CFR 435). Under this prohibition, drill cuttings may not be discharged when the associated drilling fluid fails the static sheen test. The prohibition on the discharge of free oil is intended to minimize the formation of sheens on the surface of the receiving water. The regulated parameter of the no free oil limitation is the conventional pollutant oil and grease, which separates from the SBF and causes a sheen on the surface of the receiving water.

The free oil discharge prohibition does not control the discharge of oil and grease and crude oil contamination in SBFs as it would in WBFs. With WBFs, oils that may be present (such as diesel oil, mineral oil, formation oil, or other oleaginous materials) are present as the discontinuous phase. As such, these oils are free to rise to the surface of the receiving water where they may appear as a film or sheen upon or discoloration of the surface. By contrast, the oleaginous matrices of SBFs do not disperse in water. In addition they are weighted with barite, which causes them to sink as a mass without releasing either the oleaginous materials that constitute the SBF or any contaminant formation oil. Thus, the test would not identify these pollutants. However, a portion of the synthetic material that constitutes SBF may rise to the surface to cause a sheen. These components that rise to the surface fall under the general category of oil and grease and are considered conventional pollutants. Therefore, the purpose of the no free oil limitation is to control the discharge of oil and grease that separates from the SBF and causes a sheen on the surface of the receiving water. In addition, the no free oil limitation controls all pollutants (i.e., conventional, nonconventional, and toxic pollutants) in SBFs by approximating the level of control that can be achieved by existing shall shaker technology. The limitation, however, is not intended to control formation oil contamination.

3.2 Formation Oil Contamination

Formation oil contamination of the SBF associated with the cuttings is limited under BAT and NSPS. EPA also promulgated a screening method [Reverse Phase Extraction (RPE) method presented in Appendix 6 to Subpart A of Part 435] and a compliance assurance method [Gas Chromatograph/Mass Spectrometer (GC/MS) method presented in Appendix 5 to Subpart A of Part 435].

Formation oil is an "indicator" pollutant for the many toxic and priority pollutant components present in formation (crude) oil, such as aromatic and polynuclear aromatic hydrocarbons. These pollutants include benzene, toluene, ethylbenzene, naphthalene, phenanthrene, and phenol (see Chapter VII). The RPE method is a fluorescence test and is appropriately "weighted" to better detect crude oils. These crude oils contain more toxic aromatic and PAH pollutants and show brighter fluorescence (i.e., noncompliance) in the RPE method at lower levels of crude oil contamination. Because the RPE method is a relative brightness test, GC/MS is promulgated as the confirmatory compliance assurance method when the results from the RPE compliance method are in doubt by either the operator or the NPDES controlling authority. Results from the GC/MS method will supersede those of the RPE method. EPA also requires that operators verify and document that an SBF is free of formation oil contamination before initial use of the SBF. The GC/MS method will be used to verify and document the absence of formation oil contamination in SBFs.

3.3 Retention of SBF on Cuttings

EPA is promulgating a BAT limitation and NSPS to control the retention of drilling fluid on drill cuttings. The BAT limitation and NSPS are presented as the percentage of base fluid on wet cuttings [i.e., mass base fluid (g)/mass wet cuttings (g)], averaged over the entire well sections drilled with SBF. The limitation and standard control the quantity of drilling fluid discharged with the drill cuttings. Both nonconventional and priority toxic pollutants are controlled by this limitation. Nonconventionals include the SBF base fluids, such as enhanced mineral oils, internal olefins, linear alpha olefins, poly alpha olefins, paraffinic oils, C_{12}-C_{14} vegetable esters of 2-hexanol and palm kernel oil, "low viscosity" C_8 esters, and other oleaginous materials. Several toxic and priority pollutant metals are present in the barite weighting agent, including arsenic, chromium, copper, lead, mercury, nickel, and zinc, and nonconventional pollutants such as aluminum and tin.[2] This limitation also controls nonconventional pollutants found in some drilling fluid components (e.g., emulsifiers, oil wetting agents, filtration control agents, and viscosifiers) that are added to the base fluid in order to build a complete SBF package. These pollutants would not be controlled by the sediment toxicity stock limitations. In response to the February 1999 Proposal (64 FR 5501), EPA received comments that these nonconventional pollutants include fatty acids.[4] EPA also received further information that the non-conventional pollutants in these drilling fluid components include amine clays, amine lignites, and dimer/trimer fatty acids.[5]

This limitation also controls the toxic effect of the drilling fluid and the persistence or biodegradation of the base fluid. Specifically, as stated in the April 2000 NODA (65 FR 21553), lowering the percentage of residual drilling fluid retained on cuttings increases the recovery rate of the seabed receiving the cuttings.[6, 7, 8]

Limiting the amount of SBF content in discharged cuttings controls: (1) the amount of toxic and non-conventional pollutants in SBF which are discharged to the ocean; (2) the biodegradation rate of discharged SBF; and (3) the potential for SBF-cuttings to develop cuttings piles and mats which are deleterious to the benthic environment.

As originally proposed in February 1999 (64 FR 5547) and re-stated in April 2000 (65 FR 21552), EPA promulgated a retort and sampling compliance method for the cuttings retention BAT limitation and NSPS (see Appendix 7 to Subpart A of 40 CFR 435; API Recommended Practice 13B-2).

3.4 Cuttings Discharge Sediment Toxicity

EPA also regulates the sediment toxicity in SBF discharged with cuttings as a nonconventional pollutant parameter and as an indicator for toxic pollutants in SBFs and additives (e.g., emulsifiers, oil wetting agents, filtration control agents, and viscosifiers) that comprise the drilling fluid package. EPA has promulgated a BAT limitation and NSPS to control the maximum sediment toxicity of the SBF discharged with cuttings at the point of discharge. The sediment toxicity of the SBF-cuttings at the point of discharge is measured by the modified sediment toxicity test (ASTM E1367-92) using a natural sediment or formulated sediment and *Leptocheirus plumulosus* as the test organism.

EPA finds that the sediment toxicity test at the point of discharge is practical as an indicator of the sediment toxicity of the drilling fluid at the point of discharge. The sediment toxicity test applied at the point of discharge will control non-conventional pollutants found in some drilling fluid components (e.g., emulsifiers, oil wetting agents, filtration control agents, and viscosifiers) which are added to the base fluid in order to build a complete SBF package. Other possible toxic pollutants of drilling fluids may include mercury, cadmium, arsenic, chromium, copper, lead, nickel, and zinc, and formation oil contaminants. As previously stated, establishing discharge limits on toxicity encourages the use of less toxic drilling fluids and additives. The modifications to the 10-day sediment toxicity test include shortening the test to 96-hours. Shortening the test allows operators to continue drilling operations while the sediment toxicity test is being conducted on the discharged drilling fluid. Finally, operators discharging WBFs are already complying with a biological test at the point of discharge, the 96-hour SPP toxicity test, which tests whole WBF aquatic toxicity using the test organism *Mysidopsis bahia.*

4. MAINTENANCE OF CURRENT REQUIREMENTS

EPA retains the existing BAT and NSPS limitations on the stock barite of 1 mg/kg mercury and 3 mg/kg cadmium. These limitations control the levels of toxic pollutant metals because cleaner barite that meets the mercury and cadmium limits is also likely to have reduced concentrations of other metals. Evaluation of the relationship between cadmium and mercury and the trace metals in barite shows a correlation between the concentration of mercury with the concentration of arsenic, chromium, copper, lead, molybdenum, sodium, tin, titanium and zinc.[2]

EPA also retains the BAT and NSPS limitations prohibiting the discharge of drilling wastes containing diesel oil in any amount. Diesel oil is considered an "indicator" for the control of specific toxic pollutants. These pollutants include benzene, toluene, ethylbenzene, naphthalene, phenanthrene, and phenol. Diesel oil may contain from 3% to 10% by volume PAHs, which constitute the more toxic components of petroleum products.

EPA is not modifying the existing BAT limitation and NSPS for controlling the maximum aqueous phase toxicity of SBF-cuttings at the point of discharge using the suspended particulate phase (SPP) test (see Appendix 2 of Subpart A of Part 435). The BAT limitation and NSPS for controlling aqueous toxicity of discharged SBF-cuttings is retained as the minimum 96-hour LC_{50} of the SPP shall be 3 percent by volume. EPA is interested in controlling the toxicity of drilling fluids in the sediment and the water column and is requiring both a sediment toxicity test and an aqueous phase toxicity test to assess overall toxicity of the drilling fluid at the point of discharge. EPA finds that the SPP test at the point of discharge is practical as a measurement of the aquatic toxicity of the drilling fluid at the point of discharge. The discharge SPP test will control non-conventional pollutants found in drilling fluid components (e.g., emulsifiers, oil wetting agents, filtration control agents, and viscosifiers) which are added to the base fluid in order to build a complete SBF package. Moreover, operators discharging WBFs are already complying with the SPP toxicity test on discharged WBFs.

5. REFERENCES

1. Daly, J., EPA, Memorandum regarding "Meeting with Oil and Gas Industry Representatives Regarding Synthetic Drilling Fluids," July 2, 1996, with two attachments: 1) Information package entitled "Enhanced Mineral Oils (EMO) for Drilling," presented by Exxon Co., U.S.A Marketing, D.F. Jacques, Ph. D., June 25, 1996, and 2) Letter from M.E. Parker, P.E., Exxon Company U.S.A., to M. B. Rubin, EPA. 9/17/96. (Record No. I.B.a.2)

2. U.S. EPA, Development Document for Effluent Limitations Guidelines and New Source Performance Standards for the Offshore Subcategory of the Oil and Gas Extraction Point Source Category, Final, EPA 821-R-93-003, January 1993.

3. Neff, J.M., S. McKelvie and R.C. Ayers. 2000. A Literature Review of Environmental Impacts of Synthetic Based Drilling Fluids, Draft. Report to USDOI, MMS. 4/27/00. (Record No. IV.F.1)

4. Rubin, M., API and R.J. Moran, NOIA. Letter to M. Rubin, EPA in response to proposed effluent limitation guidelines, May 1999. (Record No. III.A.a.7)

5. Parker, M. Industry Operator Answers to EPA Solids Control Questions. Personal communication between M. Parker, ExxonMobil Production Company and R. Kirby, EPA, November 1999. (Record No. III.B.b.1)

6. Vik, E.A., B.S. Dempsey, B. Nesgard. 1996. Evaluation of Available Test Results from Environmental Studies of Synthetic Based Drilling Muds. OLF Project, Acceptance Criteria for Drilling Fluids. Aquateam Report No. 96-010. (Record No. I.D.b.30)

7. Vik, E.A., B. Nesgard, J.D. Berg, S.M. Dempsey, D.R. Johnson, L. Gawel, and E. Dalland. 1996. Factors Affecting Methods for Biodegradation Testing of Drilling Fluids for Marine Discharge. SPE 35981, pp. 697-711. (Record No. I.D.b.31)

8. Getliff, J. A. Roach, J. Toya, and J. Carpenter. 1997. An Overview of the Environmental Benefits of LAO Based Drilling Fluids for Offshore Drilling. Presented at the 5th International Conference on Minimizing the Environmental Effects of Drilling Operations. 6/23/97. (Record No. III.B.a.15)

CHAPTER VII

DRILLING WASTES CHARACTERIZATION, CONTROL, AND TREATMENT TECHNOLOGIES

1. INTRODUCTION

The first three parts of this chapter describe the sources, characteristics, and volumes of drilling wastes generated from oil and gas drilling operations that use SBFs. The last part of this chapter describes currently available pollution control and treatment technologies that recover SBF from drill cuttings, reducing the volume of drilling wastes and the quantities of pollutants discharged to surface waters.

2. DRILLING WASTE SOURCES

Drilling fluids and drill cuttings are the most significant waste streams from exploratory and development well drilling operations. EPA proposes limitations for the waste stream of synthetic-based fluids and associated cuttings ("SBF-cuttings") that are generated when SBF or other non-aqueous drilling fluids are used. All other waste streams from well drilling operations and other drilling fluid types (i.e., water-based or oil-based fluids) have current applicable limitations and standards that are not included under this rulemaking. The following subsections discuss the sources of SBF and SBF-cuttings in well drilling operations.

2.1 Drilling Fluid Sources

SBFs are considered a valuable commodity and not a waste. It is industry practice to continuously reuse SBFs while drilling a well interval. At the end of the well, remaining SBF is shipped back to shore for refurbishment and reuse. SBF is discharged only as a contaminant of the drill cuttings waste stream. It is not discharged as a neat drilling fluid waste stream (drilling fluid not associated with cuttings), unlike WBF discharges. Compared to WBFs, SBFs are relatively easy to separate from drill cuttings because they do not disperse in WBFs to the same extent. Due to the dispersion of fine cuttings in WBF, drilling fluid components often need to be added to maintain required drilling fluid flow properties (rheology). These additions are frequently in excess of the drilling fluid system capacity. The excess "dilution volume" of a

water-based drilling fluid is discharged as a resultant waste. The generation of this dilution volume waste stream does not occur with SBFs.

The top of the well is normally drilled with a WBF. As the well becomes deeper, the performance requirements of the drilling fluid increase, and the operator may, at some point, decide that the drilling fluid system should be changed to either a traditional OBF, based on diesel oil or mineral oil, or an SBF. The system, including the drill string and the solids separation equipment, must be changed entirely from the WBF to the SBF (or OBF) system, and the two do not function as a blended system. The entire system is either a water dispersible drilling fluid such as a WBF, or a water non-dispersible drilling fluid such as an OBF or SBF. The decision to change the system from a WBF water dispersible system to an OBF or SBF water non-dispersible system depends on many factors including[1]:

- the operational considerations, i.e., rig type (risk of riser disconnects with floating drilling rigs), rig equipment, distance from support facilities,
- the relative drilling performance of one type of fluid compared to another, e.g., rate of penetration, well angle, hole size/casing program options, horizontal deviation,
- the presence of geologic conditions that favor a particular fluid type or performance characteristic, e.g., formation stability/sensitivity, formation pore pressure vs. fracture gradient, potential for gas hydrate formation,
- drilling fluid cost - base cost plus daily operating cost,
- drilling operation cost - rig cost plus logistics and operation support, and
- drilling waste disposal cost.

Industry has commented that while the right combination of factors that favor the use of SBF can occur in any area, they most frequently occur with "deep water" operations.[1] This is due to the fact that these are higher cost operations and therefore can better justify the higher initial cost of SBF use.

The recovery of SBF from drill cuttings serves two purposes. The first is to return drilling fluid for reintroduction to the active drilling fluid system, and the second is to minimize the discharge of SBF. As more aggressive methods are used to recover drilling fluid from cuttings, the cuttings tend to break down into smaller particles, called fines. Fines are not only more difficult to separate from drilling fluid, but also cause a deterioration of certain properties (i.e., rheology) of the drilling fluid. Increased recovery of fluid from cuttings is a larger problem for WBFs than SBFs because WBFs encourage cuttings to disperse and degrade WBF rheology more than do SBFs. Compared to WBF, more aggressive methods of recovering SBF from the cuttings waste stream are both practical and, because of the much higher cost of SBF,

desirable. These more aggressive fluid recovery methods also more effectively reduce the discharge of SBF. This improved treatment reduces the potential for anoxia (lack of oxygen) in the receiving sediment as well as the quantity of toxic and nonconventional components of discharged SBF. The level of reduction of SBF on cuttings discharges required in this rule reflects appropriate use of the BAT technologies.

Environmental impacts can be caused by toxic, conventional, and non-conventional pollutants in the SBF that adheres to the discharged drill cuttings. The adhered SBF drilling fluid is mainly composed, on a volumetric basis, of the synthetic material, or more broadly speaking, oleaginous (oil-like) material. This oleaginous material may cause hypoxia (reduction in oxygen) or anoxia in the immediate sediment, depending on currents, temperature, and rate of biodegradation. Oleaginous materials that biodegrade quickly will deplete oxygen more rapidly than more slowly degrading materials. EPA, however, thinks that faster biodegradation (especially anaerobic) is environmentally preferable to slower biodegradation despite the increased risk of short term anoxia that accompanies faster biodegradation. This is because cuttings piles generally promote anaerobic activity, especially in deeper waters, and recolonization of the area impacted by the discharge of SBF-cuttings or OBF-cuttings has been correlated with the disappearance of the base fluid in piles or directly in sediment, and does not seem to be correlated with short term anoxic effects that may result while the base fluid is disappearing. In studies conducted in the North Sea, base fluids that biodegrade faster have been found to disappear more quickly, and recolonization at these sites has been more rapid.[2, 3, 4] The oleaginous material may also be toxic or bioaccumulate, and it may contain priority pollutants such as polynuclear aromatic hydrocarbons (PAHs). However, SBF base fluids typically do not contain PAHs (see discussion of regulated drilling fluid pollutant parameters in section VI.2).

Barite, a weighting agent that is a component of SBF, is also discharged with SBF adhering to drill cuttings. Barite is a mineral principally composed of barium sulfate, and it is known to generally have trace contaminants of several toxic heavy metals such as mercury, cadmium, arsenic, chromium, copper, lead, nickel, and zinc. See section VII.3.1 for the list of pollutants EPA identified as associated with synthetic drilling fluid.

2.2 Drill Cuttings Sources

Drill cuttings are produced continuously at the bottom of the hole at a rate proportionate to the advancement of the drill bit. These drill cuttings are carried to the surface by the drilling fluid, where the cuttings are separated from the drilling fluid by the solids control system. The drilling fluid is then sent back down hole, provided it still has the characteristics required to meet technical drilling requirements. Various sizes of drill cuttings are separated by the solids separations equipment, and it is necessary to remove the

fines as well as the large cuttings from the drilling fluid to maintain the required flow properties (see section VII.5.3.4 for discussion of solids control system design).

The drill cuttings range in size from large particles on the order of a centimeter in size to small particles a fraction of a millimeter in size (i.e., fines). As the drilling fluid returns from down hole laden with drill cuttings, it normally is first passed through primary shale shakers (often called "scalp" shakers) that remove the largest cuttings, ranging in size of approximately 1 to 5 millimeters. The drilling fluid may then be passed over secondary shale shakers to remove smaller drill cuttings. Finally, a portion or all of the drilling fluid from the primary and secondary shakers may be passed through a centrifuge (often referred to as a decanting centrifuge) or another shale shaker with a very fine mesh screen (often referred to as a mud cleaner) that functions as a fines removal unit. It is important to remove fines from drilling fluid to maintain the desired rheology of the active drilling fluid system. Thus, the cuttings waste stream typically consists of larger cuttings from the primary shale shakers, fines from a fine mesh shaker or centrifuge, and may also consist of smaller cuttings from a secondary shale shaker. Additionally, the cuttings that leave the primary shaker may be further treated by another shaker, typically referred to as a drying shaker or cuttings dryer, to indicate that its purpose is to treat cuttings, as opposed to a secondary shaker or mud cleaner that treats drilling fluid.

Drill cuttings are typically discharged continuously during drilling as they are separated from the drilling fluid in the solids separation equipment. The drill cuttings will also carry a residual amount of adherent drilling fluid. Total suspended solids (TSS) makes up the bulk of the pollutant loadings, and is comprised of two components: the drill cuttings themselves, and the solids in the adhered drilling fluid. The drill cuttings are primarily small bits of stone, clay, shale, and sand. The source of the solids in the drilling fluid is primarily the barite weighting agent, and clays that are added to modify the viscosity. Because the quantity of TSS is so high and consists of mainly large particles that settle quickly, discharge of SBF drill cuttings can cause benthic smothering and/or sediment grain size alteration resulting in potential damage to invertebrate populations and potential alterations in spawning grounds and feeding habitats.

3. DRILLING WASTE CHARACTERISTICS

The waste stream discharged from drilling operations that use SBFs or other non-aqueous drilling fluids consists of three components: adherent drilling fluid, drill cuttings, and formation oil. Table VII-1 lists the waste characteristic data for these components that EPA compiled as the basis for the compliance costs, pollutant reductions, and non-water quality environmental impacts analyses. The following sections discuss the sources and scope of these characteristics for each waste component.

3.1 Drilling Fluid Characteristics

Based on per-well data provided by API, EPA assumed a model SBF drilling fluid having a formulation consisting of 47% by weight synthetic base fluid, 33% solids, and 20% water.[5] This formulation represents a 70%/30% ratio of synthetic base fluid to water, typical of commercially available SBFs.[6] Because there are no available data to the contrary, EPA further assumed that this formulation remains unchanged in the waste stream, although it is likely that the relative proportions of the three components would be altered in the drilling and solids control operations.

The synthetic base fluid is one of two sources of the conventional pollutant oil and grease, as shown in Table VII-1. In lieu of oil and grease concentration data for SBFs, EPA substituted "total oil" for the oil and grease measurement, assuming that the total amount of synthetic base fluid (plus formation oil) is equivalent to the total oil content of the waste stream. A total oil concentration of 190.5 lbs of synthetic base fluid per bbl of SBF (as shown in Table VII-1) was calculated based on the SBF formulation described above, and a specific gravity of 0.8 (280 lbs/bbl).[7, 8]

EPA estimates that all solids in the drilling fluid are barite, based on standard formulation data.[6,13] Barite is used to control the density of drilling fluids and is the primary source of toxic metal pollutants. The characteristics of raw barite determine the concentrations of metals found in the adhering drilling fluid. To control the concentration of heavy metals in drilling fluids, EPA promulgated regulations requiring that stock barite that meet the maximum limitations 3 mg/l for cadmium and 1 mg/l for mercury (58 FR 12454, March 4, 1993). Table VII-1 includes the metals concentration profile for barite.

TABLE VII-1
SBF DRILLING WASTE CHARACTERISTICS

Waste Characteristics	Value	References
SBF formulation	47% synthetic base fluid, 33% barite, 20% water (by weight)	Calculated from industry data (Ref. 5)
Synthetic base fluid density	280 pounds per barrel	Ref. 7 and 8
Barite density	1,506 pounds per barrel	Ref. 9
SBF drilling fluid density	9.65 pounds per gallon	Calculated from industry data (Ref. 5)
Percent (vol.) formation oil	0.2%	See section VII.3.3
Pollutant Concentrations in SBF		
Conventionals	**lbs/bbl of SBF**	**Reference**
Total Oil as synthetic base fluid Total Oil as formation oil TSS as barite	190.5 0.588 133.7	Derived from SBF formulation and densities listed above
Priority Pollutant Organics	**lbs/bbl of SBF**	**Reference**
Naphthalene Fluorene Phenanthrene Phenol	0.0010024 0.0005468 0.0012968 0.000003528	Calculated from diesel oil composition in Offshore Development Document, Table VII-9 (Ref. 10 and 11)
Priority Pollutant Metals	**mg/kg Barite**	**Reference**
Cadmium Mercury Antimony Arsenic Beryllium Chromium Copper Lead Nickel Selenium Silver Thallium Zinc	1.1 0.1 5.7 7.1 0.7 240.0 18.7 35.1 13.5 1.1 0.7 1.2 200.5	Offshore Development Document, Table XI-6 (Ref. 10)
Non-Conventional Metals	**mg/kg Barite**	**Reference**
Aluminum Barium Iron Tin Titanium	9,069.9 588,000 15,344.3 14.6 87.5	Offshore Development Document, Table XI-6 (Ref. 10), except for barium, which was estimated (Ref. 12)
Non-Conventional Organics	**lbs/bbl of SBF**	**Reference**
Alkylated benzenes Alkylated naphthalenes Alkylated fluorenes Alkylated phenanthrenes Alkylated phenols Total biphenyls Total Dibenzothiophenes	0.0056429 0.0530502 0.0063859 0.0080683 0.0000311 0.0104867 0.0004469	Calculated from diesel oil composition in Offshore Development Document, Table VII-9 (Ref. 10 and 11))

The barite in the SBF is also one of two sources of the conventional pollutant TSS. The other source of TSS is drill cuttings, as mentioned above in section VII.2.2. The TSS, as barite concentration of 133.7 lbs/bbl of SBF listed in Table VII-1, was calculated from the SBF formulation described above, and a barite density of 1,506 lbs/bbl.[9]

Applying the densities of the synthetic base fluid, barite, and water to the drilling fluid formulation described above, EPA calculated a drilling fluid weight of 9.65 lbs/gal (405 lbs/bbl).[5] EPA recognizes that this weight is lower than typical SBF weights, which can range from 10 to 17 pounds per gallon.[6,14] This lower weight is a result of limiting the model formulation to only three components. Additional solid compounds are typically present in SBFs that add to the weight of the fluid, but vary too much in weight fraction and type to be included in EPA estimates.

3.2 Drill Cuttings Characteristics

As described in section VII.2.2, drill cuttings contribute the greatest quantity to the pollutant loadings in the form of TSS. For the purpose of estimating pollutant reductions, EPA assumed that the TSS concentration attributable to drill cuttings in the waste stream is based on the density of the dry weight of cuttings, quoted in the literature as 910 lbs/bbl.[9] As explained later in section VII.4.2.3, the actual concentration of cuttings in the waste stream varies with the amount of drilling fluid estimated to adhere to the cuttings following treatment. However, the total amount of cuttings generated per well is always equal to the volume of the hole drilled.

3.3 Formation Oil Contamination

In addition to the SBF base fluid, formation oil is another source of oil and grease in SBF-cuttings discharges. Formation oil contains organic priority pollutants. For the proposed rule, the majority of formation oils would fail to meet the static sheen test or toxicity test limitations when present in SBFs at a concentration of about 0.5%. Based on this estimate of the concentration of formation oil that would not meet existing requirements and based on information from the industry concerning formation oil contamination of drilling fluids,[15] EPA estimates that, on average, the adhering drilling fluid in a model SBF-cuttings waste stream will contain 0.2% by volume formation oil. Since the composition of formation (crude) oil varies widely, diesel oil was used to model the organic pollutant concentrations associated with 0.2% formation oil contamination. The organic pollutant concentrations, both priority and non-conventional, were obtained from analytical data presented in the Offshore Oil and Gas Development Document for Gulf of Mexico diesel.[10] The total oil concentration of 0.588 lbs of formation oil per bbl SBF

shown in Table VII-1 was calculated from the SBF formulation described above, and a specific gravity of 0.84 (294 lbs/bbl) quoted in the literature for diesel oil.[9]

4. DRILLING WASTE VOLUMES

4.1 Factors Affecting Drilling Waste Volumes

The volume of drill cuttings generated depends primarily on the dimensions (depth and diameter) of the well drilled and on the percent washout. Washout is the enlargement of a drilled hole due to the sloughing of material from the walls of the hole. The greatest volumes of drill cuttings are generated during the initial stages of drilling when the borehole diameter is large and washout tends to be higher. Data gathered by EPA for the Coastal Oil and Gas Rulemaking effort indicate that while percent washout varies depending on the type of formation being drilled, it generally decreases with hole depth.[16]

The volume of drill cuttings generated also depends on the type of formation being drilled, the type of bit, and the type of drilling fluid used. Soft formations, especially hydrating shales, are more susceptible to borehole washout than hard formations. The type of drilling fluid used can affect the amount of borehole washout and shale sloughing. Intervals drilled with water-based drilling fluids (WBFs) can experience washout of 100 percent and greater; a generalization of washout for WBFs is 45 percent.[62] Intervals drilled with OBFs or SBFs are typically closer to gage size (i.e., washout is zero percent). A rule-of-thumb value of 5 to 10% washout was recently cited by a Gulf of Mexico operator[17] for intervals drilled with SBF, consistent with a generalized estimate of 7.5 percent washout for SBF provided by another industry source.[62] The type of drill bit determines the characteristics of the cuttings (particle size). Depending on the formation and the drilling characteristics, the total volume of drill solids generated will be at least equal to the borehole volume, but is most often greater due to the breaking up of the compacted formation material.

The amount of drilling fluid that adheres to the cuttings depends on the type and efficiency of the solids control equipment used, the drill particle size, and the type of drilling fluid used. The solids control system, described in detail in section VII.5.3.4, is a step-wise operation designed to remove drill cuttings from the drilling fluid by separating successively smaller particles. Continuous and/or intermittent discharges are normal occurrences in the operation of solids control equipment. Such discharges occur for periods from less than one hour to 24 hours per day, depending on the type of operation and well conditions. Each separation unit in the system produces a cuttings waste stream of a particular particle size distribution, and with an amount of adhering drilling fluid that, on average, is characteristic of that unit. The efficiency of a particular separation unit, as measured by the amount of drilling fluid retained on the cuttings, is maximized

through vigilant operation and maintenance. Other operating factors, such as whether the drilling platform is stationary or floating, can also affect drilling fluid retention on cuttings.

Small and fine cuttings have greater surface area and generally retain more drilling fluid than larger cuttings. Therefore, higher retention values are associated with the solids control units that generate smaller or fine particle cuttings. Data submitted to EPA for wells drilled with SBF indicate that retention values are generally lower for the primary separation unit that produces the larger size cuttings, as compared with the secondary separation unit that produces smaller cuttings.[18,19] As stated in section VII.2.1, cuttings are generally easier to separate from OBFs or SBFs than WBFs because drill solids disperse and break up into finer particles to a greater extent in WBFs.

4.2 Estimates of Drilling Waste Volumes

Based on the waste characteristics presented above in Table VII-1 and well volume data supplied by industry operators, EPA calculated drilling waste volumes generated from four model wells. The following sections present the data and methods EPA used to estimate per-well volumes of drill cuttings, drilling fluid, and formation oil in the waste stream.

4.2.1 *Waste SBF/OBF Drill Cuttings Volumes*

EPA developed model well characteristics from information provided by the American Petroleum Institute (API) for the purpose of estimating costs to comply with, and pollutant reductions resulting from, the proposed discharge option and the zero-discharge option.[1] API provided well size data for four types of wells currently drilled in the Gulf of Mexico: development and exploratory wells in both deep water (i.e., greater than or equal to 1,000 feet) and shallow water (i.e., less than 1,000 feet). The following text, as well as text throughout the Development Document, refers to these wells by the acronyms DWD (deep-water development), DWE (deep-water exploratory), SWD (shallow-water development), and SWE (shallow-water exploratory).

The model well information provided by API included the length of hole drilled for successive hole diameters, or intervals.[1] API provided data for all intervals drilled per well, which included intervals drilled with WBF and intervals drilled with SBF. From this, EPA calculated the gage hole volume for the well intervals that API identified as being drilled with SBF. To calculate the waste cuttings volume, EPA further estimated, based on information provided by industry sources[17, 62] that the gage hole volume would increase by an average 7.5 percent due to washout. EPA also estimated that the amount of washout incurred using

SBF is the same for intervals drilled with OBF, based on industry source information stating that there is essentially no difference in the performance of the two drilling fluid types.[20] For the four model wells, EPA determined that the volumes of cuttings generated by these SBF or OBF well intervals are, in barrels, 565 for SWD, 1,184 for SWE, 855 for DWD, and 1,901 for DWE. These volumes represent only the rock, sand, and other formation solids drilled from the hole, and do not include drilling fluid that adheres to the dry cuttings. Table VII-2 presents the data provided by API, and the hole volumes and total waste cuttings volumes that EPA calculated based on these data.

TABLE VII-2
MODEL WELL VOLUME DATA[a]

Model Well	Hole Diameter[b] (inches)	Depth Interval[b] (feet)	Gage Volume (cu. feet)	Gage Volume (barrels)	Gage Volume plus 7.5% Washout (barrels)
SWD	8.5	7,500	**2,955**	**526**	**565**
SWE	12.25	6,000	4,911	873	
	8.5	2,500	985	175	
	6	1,500	295	52	
			6,190	**1,101**	**1,184**
DWD	12.25	4,500	3,683	655	
	8.5	2,000	788	140	
			4,471	**795**	**855**
DWE	17.5	4,500	7,517	1,337	
	12.25	2,000	1,637	291	
	8.5	2,000	788	140	
			2,425	**1,768**	**1,901**

[a] Data represent only those intervals API identified as being drilled with SBF.[1] Numbers in bold typeface are totals for the given model well.

[b] Source: API responses to EPA Technical Questions.[1]

4.2.2 *SBF Drilling Fluid Retention-on-Cuttings (ROC) Values*

4.2.2.1 *Retort Analytical Method*

The amount of drilling fluid that adheres to drill cuttings is measurable by retort analysis. The published retort method currently used by drilling operators and drilling fluid manufacturing companies is API's Recommended Practice 13B-2: Field Testing Oil-Based Drilling Fluids, Appendix B: Oil and Water Content From Cuttings For Percentage Greater Than 10% (API RP 13B-2). This method is designed to measure the relative weights of liquid and solid components in a sample of wet drill cuttings. A summary description of the method is presented by Annis as follows[18]:

> In this "Retort Procedure," a known weight of wet cuttings is heated in a retort chamber to vaporize the liquids contained in the sample. The liquids (synthetic-based drilling material and water vapors) are then condensed, collected, and measured in a precision graduated receiver. The API recommended practice...recommends use of a retort sample cup volume of 50-cm^3 $\pm$ 0.25-cm^3...
>
> According to API RP 13B-2, the following measurements are made during the retort procedure:
>
> A — Weight (API PR 13B-2 uses mass in grams) of the clean and dry retort assembly (cup, lid, and retort body with steel wool).
> B — Weight of the retort assembly and wet cuttings sample.
> C — Weight of the clean and dry liquid receiver.
> D — Weight of the receiver and its liquid contents (synthetic-based drilling material and water).
> E — Weight of the cooled retort assembly without the condenser.
> V — Volume of water recovered from cooled liquid receiver.
>
> To calculate the weight % of synthetic-based drilling material on the discharged cuttings perform the following calculations:
>
> 1. Weight of the wet cuttings sample (M_w) equals the weight of the retort assembly and wet cuttings sample (B) minus the weight of the clean and dry retort assembly (A).
>
> $$M_w = B - A$$
>
> 2. Weight of the dry retorted cuttings (M_d) equals the weight of the cooled retort assembly (E) minus the weight of the clean and dry retort assembly (A).
>
> $$M_d = E - A$$

3. Weight of the synthetic-based drilling material (M_o) equals the weight of the liquids receiver with its contents (D) minus the sum of the weight of the dry receiver (C) and the weight of the water (V). Assume the density of water is 1 g/cm^3 the weight of the water is equivalent to the volume of water.

$$M_o = D - (C + V)$$

The sum of M_d, M_o, and V should be within 5 percent of the weight of the wet sample (M_w). If it is not, the procedure should be repeated.

API reviewed the method in API RP 13B-2 with the intention of standardizing the sampling, testing, and recording procedures for determining the retention of synthetic base fluid on cuttings.[21] In addition to the above retort measurements and calculations, the revised procedures that were instituted following the proposal and published in the April 2000 NODA, included guidelines for sampling, and a worksheet for calculating the amounts of total waste and waste components generated. API's goal in writing these revised procedures was to "develop a definitive data base on retention of synthetic material in cuttings discharge streams."[21]

Since the April 2000 NODA, EPA in conjuction with API conducted a study to establish the method detection limit (MDL) of quantification for API Recommended Practice 13B-2. These studies confirm that API Recommended Practice 13B-2 (50 mL retort with a 20 mL liquid receiver graduated in 0.1 mL increments) is sensitive enough to meet the ROC limitations.

In developing the study, EPA/API sought to simulate realistic field conditions by conducting the first phase at three oil rig facilities. The first phase of the study required each rig-based laboratory to analyze a set of replicate MDL samples (see Table VII-3). Based on the replicate analyses, EPA calculated an MDL for each facility using the procedures specified at 40 CFR part 136, Appendix B. EPA then used the facility-specific MDLs to calculate a pooled MDL and ML for the method. The pooled MDL and ML include components of interlaboratory variability and represent levels which can be achieved by a single laboratory using the method. In the second phase of the study, EPA contracted a single land-based laboratory to verify that it could achieve the calculated pooled MDL and ML using two types of base fluids (IO and ester; see Table VII-4).

TABLE VII-3
API RECOMMENDED PRACTICE 13B-2 MDL PHASE 1 STUDY RESULTS

Facility	MDL	ML
Marathon Oil	1.7%	5%
Exxon-Mobil	0.5%	2%
MI-Shell	1.1%	2%
Pooled	**1.0%**	**2%**

TABLE VII-4
API RECOMMENDED PRACTICE 13B-2 MDL PHASE 2 VERIFICATION RESULTS

Base Fluid	MDL	ML
Internal olefin (IO)	0.9%	2%
Ester	1.0%	2%

4.2.2.2 *Solids Control Description and Performance*

For proposal, EPA determined average drilling fluid retention values for solids control equipment that was used in offshore drilling operations in the U.S. (hereafter referred to as baseline solids control) and for solids control equipment that was used in North Sea drilling operations capable of achieving retention values consistently lower than baseline solids control (hereafter referred to as add-on solids control technology). API provided a database of well-specific retention data for baseline solids control equipment, compiled from service companies that supplied offshore operators with synthetic-based drilling fluid.[18] This database contained the results of retort analyses of SBF-cuttings discarded from what the report calls primary shale shakers, secondary shale shakers, and centrifuges. Other than these labels for the equipment, the database provided no further information regarding the arrangement of the solids control systems associated with the individual wells. While a primary shale shaker was assumed to be the first unit in the solids control train, the location and purpose of a what the database called a “secondary” shale shaker was ambiguous without additional information. (A “secondary” unit could receive either the drilling fluid or the drill cuttings that exit the primary shakers.) Because the database retention values of cuttings from the secondary shale shakers were, on average, higher than those from the primary shakers, EPA assumed that the secondary shakers received and treated the drilling fluid rather than the cuttings from the primary shakers. Centrifuge data were too limited to utilize in EPA’s analysis. Based on this initial API database,

EPA at proposal calculated a long-term average retention value, weighted by hole volume, of 10.6% by weight of synthetic base fluid on wet cuttings for a primary shale shaker, and 15.0% for a secondary shale shaker.[19] Due to EPA's assumption that SBF and OBF performance is equivalent, these retention values applied equally to SBF-cuttings and OBF-cuttings in the baseline analysis for the proposal.

Retention data for the add-on solids control technology also were provided by the manufacturer of a vibrating centrifuge currently used by operators located in the North Sea to recover SBF from the SBF-cuttings that exit the primary shale shaker.[22] Based on these data, EPA calculated, at proposal, a long-term average retention value, weighted by hole volume, of 5.14% by weight of synthetic base fluid on cuttings for the vibrating centrifuge. The data showed that the vibrating centrifuge was likely to perform at least as well if not better, in the Gulf of Mexico than in the North Sea because untreated Gulf of Mexico cuttings have lower retention values than those found in the North Sea. The observed performance for the primary shale shakers used in series before the vibrating centrifuge was a volume-weighted average retention of 12.4%.[19] This was 1.9 percentage points higher than the average volume-weighted retention of 10.5% observed for the primary shale shakers in the Gulf of Mexico. In the North Sea, all cuttings came from primary shale shakers, absent the use of secondary shale shakers, thereby eliminating the separate waste stream of cuttings from the secondary shale shakers.

Subsequent to the proposal, EPA received and reviewed additional retention on cuttings data. In response to the February 1999 Proposal, industry submitted data for SBF retention from 36 wells. EPA rejected six files due to incomplete reporting and determined that 16 files were complete and accurate and these data were present in the April 2000 NODA. Additionally, EPA received 14 post-proposal files too late for inclusion in the April 2000 NODA analyses.

In response to the April 2000 NODA, EPA received and evaluated retention data from an additional 79 SBF wells: the 14 received after the February 1999 Proposal comment period; 27 additional data sets received during the April 2000 NODA comment period; and 38 received after the April 2000 NODA comment period. EPA determined that data from 49 of these 79 wells were complete and included in the final rule analyses. Therefore, EPA used data from 65 wells to determine the final performance effectiveness of the various solids control technologies. A summary of the data from the 65 wells used to determine the final limitations is presented in the Statistical Analysis Document. The collection, engineering review, and extraction of data from these files are described in a separate document entitled "Engineering Review of SBF Retention-on-Cuttings Data."[63]

4.2.3 *Analysis of ROC Data and Determination of ROC Values*

EPA developed effluent limitations guidelines and standards for the control of pollutant discharges associated with the retention on cuttings (ROC) of SBFs and other drilling fluids that are non-dispersible in water. EPA used data supplied by oil and operators and equipment vendors to support development of this rule. EPA primarily used summary statistics based on these data for the following purposes: (a) estimating current (baseline) pollutant discharges, (b) calculating potential effluent limits, and (c) evaluating regulatory options. In this section, EPA presents the technology bases for final numeric limits, the data on which these limits were based, and summary statistics from the Statistical Analysis Document.[23]

4.2.3.1 *Effluent Guidelines Limitations and Standards*

EPA selected two final numeric limits for the retention of SBF on cuttings. For drilling fluids with the environmental properties of esters (toxicity and bio-degradation), the well-average ROC not to be exceeded is 9.4%. Including foreign data but excluding measurement results without backup data, this is based on the within-well averages of measurement results from Cuttings Dryer Technology 1. Cuttings Dryer Technology 1 includes horizontal centrifuges, vertical centrifuges, squeeze presses, and high-G dryers. For all other SBFs, the well-average ROC not to be exceeded is 6.9%. Including foreign data but excluding measurement results without backup data, this is based on the within-well averages of measurement results from Cuttings Dryer Technology 3. Cuttings Dryer Technology 3 includes horizontal and vertical centrifuges. In both cases, as was proposed and presented in the April 2000 NODA, the numeric limit is estimated as the 95th percentile of a normal probability distribution for the well-averages.

4.2.3.2 *Data*

Industry and equipment vendor representatives provided EPA with percent retention measurements on drill cuttings discharged from solids control systems. These data described the percent retention of SBF on cuttings after treatment from each of three technology types. The technology types include shakers (with subtypes primary shakers, secondary shakers, and other shakers); cuttings dryers (with subtypes horizontal centrifuge [Mud 10], vertical centrifuge, squeeze press, and high-G dryer); and fines removal units (with subtypes decanting centrifuge and mud cleaner). These data were recorded as percent SBF on cuttings in a sample ([weight of SBF]/[weight of wet cuttings], expressed as a percentage). Associated data generally included either the drilling depth or the length of a segment drilled, pipe diameter, drilling fluid treatment technology, backup data for the calculation of percent retention, and location of the drilling site. EPA's engineering review of the raw data is documented in a separate memorandum.[63]

4.2.3.3 *Summary Statistics*

For purposes of analysis and the development of potential limitations, the treatment technology categories or subcategories used in EPA's Statistical Support Document are: primary shakers, secondary shakers, other shakers, horizontal centrifuge (Mud 10), vertical centrifuge, squeeze press, high-G dryer, cuttings dryer 1 (a combination of the horizontal centrifuge, vertical centrifuge, squeeze press, and high-G dryer subcategories), cuttings dryer 2 (a combination of the horizontal centrifuge, vertical centrifuge, and squeeze press subcategories), cuttings dryer 3 (a combination of the horizontal and vertical centrifuge subcategories), decanting centrifuge, mud cleaner, and fines removal (a combination of the decanting centrifuge and mud cleaner subcategories). Summary statistics describing SBF ROC performance for various treatment systems based on foreign and domestic data, but excluding measurement results for which there are no backup data, are presented in Table VII-5.

EPA has also compared the observed performance of wells used to develop the 95th percentile-based limits to those final limits. For drilling fluids with the environmental properties of ester-based drilling fluids, the numeric limit is based on combining data from the high-G dryer, squeeze press, horizontal centrifuge, and vertical centrifuge. The high-G dryer is particularly important because it appears to take less space than other technologies and it may fit on drilling rigs that may not otherwise be able to install a cuttings dryer technology. For wells used in the development of final numeric limits, three out of six high-G dryers, all five squeeze press units, all eight vertical centrifuges, and twenty-five out of twenty-six horizontal centrifuges demonstrated their ability to comply with the numeric limit of 9.4% without further attention to operations, maintenance, or design. For all other SBFs, the numeric limit is based on combining data from the horizontal and vertical centrifuges. Both technologies are included to provide industry the ability to choose between equipment vendors. For wells used in the development of the final numeric limits, all eight vertical centrifuges and twenty-four out of twenty-six horizontal centrifuges demonstrated their ability to comply with the numeric limit of 6.9% without further attention to operations, maintenance, or design.

TABLE VII-5
DRILLING FLUID TREATMENT SYSTEM RETENTION ON CUTTINGS PERFORMANCE[a]

Technology Category/Subcategory	Number of Wells	Mean of Wells	Variance of Wells	95th Percentile
Primary Shale Shakers	32	9.32	9.28	14.3
Secondary Shale Shakers	22	13.8	12.1	19.5
Other Shale Shakers	22	8.96	3.16	11.9
Horizontal Centrifuge (Mud 10)	26	3.85	4.04	7.16
Vertical Centrifuge	8	3.72	2.38	6.26
Squeeze Press	5	6.71	1.92	8.99
High-G Dryer	6	9.40	4.69	13.0
Cuttings Dryer 1 (Combined Horizontal Centrifuge, Vertical Centrifuge, Squeeze Press , and High-G Dryer) [*Basis for limit on drilling fluids with the environmental properties of esters*]	45	4.89	7.42	9.37
Cuttings Dryer 2 (Combined Horizontal Centrifuge, Vertical Centrifuge, and Squeeze Press)	39	4.19	4.25	7.59
Cuttings Dryer 3 (Combined Horizontal and Vertical Centrifuge) [*Basis for limit on all other SBF*]	34	3.82	3.56	6.93
Decanting Centrifuge	22	9.97	5.13	13.7
Mud Cleaner	21	11.9	6.97	16.2
Fines Removal (Combined Decanting Centrifuge and Mud Cleaner)	39	10.8	6.30	14.9

[a] Includes foreign data, but excluding measurements for which there are no backup data.

For the purpose of estimating incremental compliance costs, pollutant reductions, and non-water quality environmental impacts, EPA calculated weighted average retention values for the baseline and compliance-level (based on add-on technology) solids control systems. Based on information provided by API,[21] EPA determined that the baseline treatment train includes primary shale shakers (PSS), secondary shale shakers (SSS), and fines removal units (FRU). The estimated volume contribution of PSS, SSS, and FRUs to the discharge waste stream are 78.5%, 18.5%, and 3.0%, respectively. Analysis of long-term average (LTA) retention-on-cuttings data indicate that PSS demonstrate a retention value of 9.32%; SSS demonstrate an SBF retention value of 13.8%; FRUs demonstrate an SBF retention value of 10.7%; a retention value of 3.82% was determined for the solids control units that classify as cuttings dryers. The following calculation was used to estimate system-wide retention for the baseline solids control system:

Weighted Average Baseline Solids Control Retention:

(0.785 x 9.32%) + (0.185 x 13.8%) + (0.03 x 10.7%) = 10.2%.

The final cuttings waste stream retention value was determined for the BAT Options 1 and 2 compliance-level solids control system, which consists of final discharge waste stream contribution from cuttings dryers and FRUs. Cuttings dryers receive and treat all cuttings from the primary shale shaker and contributes 97% of the volume to the discharge waste stream, while the FRU volume contribution is 3%. Under BAT Option 1, the discharged effluent is a composite of the waste streams from these two solids control units. The weighted average retention for this system is as follows:

Weighted Average Compliance-Level Solids BAT 1 Control Retention:

(0.97 x 3.82%) + (0.03 x 10.7%) = 4.03%.

Under BAT Option 2, the FRU discharge does not receive an allowable volume contribution to the final discharge limitation. Thus, only the cuttings dryers contribute to the final discharge effluent limitation. The SBF retention value, therefore, for BAT Option 2 is 3.82% (i.e., 1.0 x 3.82%).

4.2.4 *Calculation of SBF/OBF Model Well Drilling Waste Volumes*

For each of the four SBF/OBF model wells, EPA calculated drilling waste volumes for intervals drilled with SBF or OBF. The calculations specified per-well volumes for the waste stream components, including:

- dry cuttings (equivalent to gage hole volume plus 7.5% washout),
- synthetic base fluid (and oil base fluid in the baseline analysis),
- water,
- barite,
- whole SBF or OBF (the sum of the synthetic or oil base fluid, water, and barite),
- formation oil, and
- total waste generated (the sum of whole SBF, formation oil, and dry cuttings).

The general approach to this method is to calculate the total waste generated based on the relative proportions of the above components in the waste stream as defined by the model drilling fluid formulation, the average drilling fluid retention values, and the assumed 0.2% by volume of formation oil present in the waste stream. Waste volumes are calculated for each model well for three discharge scenarios considered,

i.e., under baseline (current) technology conditions, under BAT 1 conditions (discharge of cuttings and fines), and BAT 2 (discharge of cuttings; zero discharge of fines). The input data and generalized equations used for these calculations are shown in Table VII-6. Appendix VII-1 presents the detailed calculations for the four model wells, based on the equations in Table VII-6. The results are summarized for the baseline and three regulatory options evaluated for all four well types in Table VII-7.

TABLE VII-6
INPUT DATA AND GENERAL EQUATIONS FOR
CALCULATING PER-WELL SBF/OBF WASTE VOLUMES

Input Data and Assumptions

- Drilling fluid formulation, wt./wt.: 47% synthetic or oil base fluid, 33% barite, 20% water (Ref. 5)
- Densities, converted to pounds per barrel for:
  1. synthetic base fluid = 280 lbs/bbl (Ref. 7 and 8)
  2. barite = 1,506 lbs/bbl (Ref. 9)
  3. water = 350 lbs/bbl
  4. dry cuttings = 910 lbs/bbl (Ref. 9)
  5. formation oil (as diesel) = 294 lbs/bbl (Ref. 9)
- Retort analysis results, wt./wt.: 10.2% for standard (baseline) solids control; 4.03% for BAT/NSPS Option 1 level solids control see section VII.4.2.2); 3.82% for BAT/NSPS Option 2 level solids control (see section VII.4.2.2)

Dry drill cuttings volume (equivalent to gage hole volume plus washout)

hole volume (ft^3) = {length (ft) x π x [diameter (ft)/2]^2} x (1 + washout fraction of 0.075) (1)

drill cuttings (bbls) = hole volume (ft^3) x 0.1781 bbls/ft^3 (2)

drill cuttings (lbs) = drill cuttings (bbls) x 910 lbs/bbl (3)

Waste Components in lbs (algebraic calculation of lbs of waste components in the given drilled

TW = (RF x TW) + {[RF x (WF/SF)] x TW} + {[RF x (BF/SF)] x TW }+ (DF x TW) (4)
(base fluid) + (water) + (barite) + (drill cuttings)

where:
TW = total waste (whole drilling fluid + dry cuttings), in lbs
RF = retort weight fraction of synthetic base fluid, decimal number (e.g., 0.11 or 0.07)
WF = water weight fraction from drilling fluid formulation, decimal number
SF = synthetic base fluid weight fraction from drilling fluid formulation, decimal number
BF = barite weight fraction from drilling fluid formulation, decimal number
DF = drill cuttings weight fraction, calculated as follows:

DF = 1 - {RF x [1 + (WF/SF) + (BF/SF)]} (5)

In order to calculate TW, equations (4) and (5) are first used to calculate DF. Then TW is calculated as follows:

TW = drill cuttings (lbs) / DF (6)

Waste Component Amounts Converted from lbs to bbls

synthetic base fluid (bbls) = [RF x TW (lbs)] / (280 lbs/bbl)
water (bbls) = {[RF x (WF/SF)] x TW (lbs)} / (350 lbs/bbl)
barite (bbls) = {[RF x (BF/SF)] x TW (lbs)} / (1,506 lbs/bbl)

Whole Drilling Fluid Volume

whole SBF volume (bbls) = synthetic base fluid (bbls) + water (bbls) + barite (bbls) (7)

0.2% (vol.) Formation Oil in Whole Mud Discharged

formation oil (bbls) = 0.002 x whole SBF volume (bbls) (8)

TABLE VII-7
SUMMARY SBF/OBF MODEL WELL WASTE VOLUME ESTIMATES

Waste Component	Shallow Water (1,000 ft)				Deep Water (≥ 1,000 ft)			
	Development		Exploratory		Development		Exploratory	
	bbls	lbs	bbls	lbs	bbls	lbs	bbls	lbs
Waste Volumes Calculated for Baseline Solids Control System @ 10.2% (wt.) Retention								
Synthetic base fluid (or oil base fluid)	239	66,979	501	140,360	362	101,358	805	225,358
Water	81	28,502	170	59,728	123	43,131	274	95,897
Barite	31	47,028	65	98,551	47	71,166	105	158,230
Dry cuttings (includes 7.5% washout)	565	514,150	1,184	1,077,440	855	778,050	1,901	1,729,91
Cuttings and adherent drilling fluid generated from SBF/OBF interval	917	656,659	1,921	1,376,078	1,387	993,705	3,085	2,209,396
Whole SBF/OBF adhering to cuttings	352	142,509	737	298,638	532	215,655	1,184	479,486
Formation oil (0.2% of adherent drilling fluid)	0.7	207	1.5	433	1.1	313	2.4	696
Waste Volumes Calculated for BAT 1 Add-on Solids Control System @ 4.03% (wt.) Retention								
Synthetic base fluid	81	22,664	170	47,493	123	34,296	272	76,254
Water	28	9,644	58	20,210	42	14,594	93	32,448
Barite	11	15,913	22	33,346	16	24,080	36	53,540
Dry cuttings (includes 7.5% washout)	565	514,150	1,184	1,077,440	855	778,050	1,901	1,729,91
Cuttings and adherent drilling fluid generated from SBF/OBF interval	684	562,370	1,433	1,178,489	1,035	851,020	2,302	1,892,152
Whole SBF/OBF adhering to cuttings	119	48,220	249	101,049	180	72,970	401	162,242
Formation oil (0.2% of adherent drilling fluid)	0.2	70	0.5	147	0.4	106	0.8	235

TABLE VII-7 (Continued)
SUMMARY SBF/OBF MODEL WELL WASTE VOLUME ESTIMATES

Waste Component	Shallow Water (1,000 ft)				Deep Water (≥ 1,000 ft)			
	Development		Exploratory		Development		Exploratory	
	bbls	lbs	bbls	lbs	bbls	lbs	bbls	lbs
Waste Volumes Calculated for BAT 2 Solids Control System @ 3.82% (wt.) Retention								
Synthetic base fluid (or oil base fluid)	74	20,838	156	43,668	113	31,534	250	70,112
Water	25	8,867	53	18,582	38	13,419	85	29,835
Barite	10	14,631	20	30,660	15	22,141	33	49,227
Dry cuttings (includes 7.5% washout)	551	501,163	1,154	1,050,224	833	758,397	1,853	1,686,21
Cuttings and adherent drilling fluid generated from SBF/OBF interval	660	545,499	1,383	1,143,135	999	825,490	2,221	1,835,387
Whole SBF/OBF adhering to cuttings	109	44,336	229	92,910	166	67,093	368	149,174
Formation oil (0.2% of adherent drilling fluid)	635	64	0.5	135	0.3	97	0.7	217
Waste Volumes Calculated for BAT 3 Zero Discharged Wastes (Wastes NOT Discharged)								
Synthetic base fluid	6.4	1,805	14	3,783	9.8	2,732	22	6,074
Water	2.2	768	4.6	1,610	3.3	1,162	7.4	2,585
Barite	0.8	1,267	1.8	2,656	1.3	1,918	2.8	4,265
Dry cuttings (includes 7.5% washout)	14	13,030	30	27,306	22	19,718	48	43,842
Cuttings and adherent drilling fluid generated from SBF/OBF interval	24	16,871	50	35,355	36	25,531	80	56,765
Whole SBF/OBF adhering to cuttings	10	3,841	20	8,049	14	5,812	32	12,923
Formation oil (0.2% of adherent drilling fluid)	0.0	6	0.0	12	0.0	8	0.1	19

4.2.5 *WBF Waste Volumes and Characteristics*

For the final rule, EPA has included an analysis of the projected use of WBF under the Baseline, BAT/NSPS discharge options 1 and 2, and the (SBF) zero discharge option that were considered for this rule. This WBF analysis included projected well counts, discharge loadings, and onsite/onshore zero discharge requirements for WBF wells projected to fail the static sheen and/or SPP toxicity limitations. The source of data for this analysis is the Development Document for the Effluent Limitations and Guidelines for the Offshore Subcategory (EPA 821-R-93-003). The detailed calculations for this WBF analysis are provided in Appendix VIII-2 of this document.

The general approach used in the WBF analysis for the final SBF rule is as follows: waste volume and/or pollutant loading data on use of OBFs and WBFs presented in the Offshore Development Document were expressed on a "per bbl," "per well," or a "per day" basis. Data from the Offshore rulemaking record included: (1) WBF composition; (2) waste volumes for WBFs, OBFs, and associated cuttings; (3) the frequency of mineral oil use in WBF operations; and (4) the expected permit limitation failure rates (primarily for toxicity) on mineral oil fluids resulting in the requirement to haul or inject these wastes). These data then were applied to the current, revised well count projections and/or projected waste volumes to estimate discharge option loadings and the amount of OBFs, WBFs, and associated cuttings that require zero discharge under existing regulations (e.g., OBFs containing diesel oil, WBFs that fail the SPP toxicity test).

The first exercise in this analysis was to develop the allocation of offshore wells into various types based on the assumptions used in the Offshore Development Document. These assumptions are provided in Table XI-10 of the Offshore Development Document and specify, on a regional basis, the percentages of shallow wells versus deep wells as well as wells with mineral oil added as a lubricant, as a spotting fluid, or as both. (Cautionary note: the Offshore Development Document does not use the terms "shallow" and "deep" with reference to the water depth in which these wells are drilled, i.e., as these terms are used in this SBF rule, which classifies wells as "shallow <u>water</u>" wells or "deep <u>water</u>" wells. The Offshore Development Document, in contrast, uses these terms with reference to the target depth of the well itself, i.e., "shallow" wells ranging from 7,607 feet to 10,633 feet in depth and "deep" wells ranging from 10,082 feet to 13,037 feet in depth.)

In summary these assumptions were:

- Shallow wells respectively accounted for 51%, 58% and 41% of all wells drilled in Gulf of Mexico, California, and Alaska.

- Deep wells respectively accounted for 49%, 42%, and 59% of all wells drilled in Gulf of Mexico, California, and Alaska.
- 15% of all deep wells used OBF and were subject to a zero discharge limitation.
- 12% of all WBF wells used mineral oil as a lubricant (78% do not).
- 22% of WBF wells used mineral oil as a spotting fluid.
- The projected sheen and/or toxicity limitation failure rates for WBF wells were: no lube/no spot = 1%; lube or spot = 33%; lube plus spot = 56%.

Based on these assumptions, the percentages of WBF wells projected to pass or fail the sheen and toxicity limitations were initially developed from the data in the Offshore Development Document for application to the well counts developed for this SBF rule in order to project zero discharge requirements and loadings of WBF wells under the various regulatory options considered for the final SBF rule. The Agency questioned the applicability and reliability of these assumptions to current operations, and concluded this analysis yields a conservative (maximum upper bound) failure rate estimate.

The results of the maximum failure rate analysis are provided in Table VII-8. For the final rule, EPA decided not to rely on this failure rate estimate in its cost analysis methodology. EPA instead used the maximum lower bound estimate of 0% failure in its cost analysis. Because one cost element derived from this failure rate estimate is the cost savings from WBF wells projected to fail their limits that convert to SBF wells, using a 0% failure rate effectively eliminates this cost savings to industry and presents a more conservative aspect to the cost methodology. For the final rule, a sensitivity analysis that includes the maximum upper bound failure rate estimate was performed as an ancillary analysis (see Ref. 71).

TABLE VII-8
ESTIMATED OFFSHORE WBF STATIC SHEEN TEST/TOXICITY LIMITATION FAILURE RATES USED IN MAXIMUM FAILURE RATE ANALYSIS [a]

Well Location/Type	Projected Percent of Total Wells		
	Passing Sheen/Toxicity Limitation [b]	Failing Sheen/Toxicity Limitation [c]	With Lube, Spot, or Lube+Spot That Discharge [d]
Gulf of Mexico			
Shallow	45.1%	5.94%	10.4%
Deep (including 15% OBF)	36.8%	12.2%	8.50%
Deep (excluding 15% OBF)		4.85%	
California			
Shallow	51.3%	6.75%	11.8%
Deep (including 15% OBF)	31.5%	10.5%	7.28%
Deep (excluding 15% OBF)		4.16%	
Alaska			
Shallow	36.2%	4.77%	8.37%
Deep (including 15% OBF)	44.3%	14.7%	10.2%
Deep (excluding 15% OBF)		5.84%	

[a] See Ref. 71.
[b] Used to project discharge loadings and costs (See Ref. 71).
[c] Used to project zero discharge quantities and costs (See Ref. 71).
[d] Used to project oil and grease loadings from added mineral oil (See Ref. 71).
Source: Offshore Development Document (Ref. 10)

The WBF and WBF-cuttings waste volumes and their composition were taken from the Offshore Development Document (see Tables XI-3, XI-5, XI-6, XI-7, XI-9; ODD Section XI.3.4). The waste volumes of the WBF and associated cuttings as determined in the ODD and used in the WBF analysis for the SBF rule are as follows:

		Drilling Fluids (bbl)	Cuttings (bbl)
Gulf of Mexico	Shallow	6,938	1,475
	Deep	9,752	2,458
California	Shallow	5,939	1,242
	Deep	6,777	1,437
Alaska	Shallow	6,963	1,480
	Deep	9,458	2,413

The analysis for WBF includes a projections of conventional pollutants from cuttings (TSS from barite or cuttings, plus oil and grease from cuttings from wells in which mineral oil was used as a lubricant or spotting fluid), conventional pollutants from discharged WBF (TSS from barite in the WBF plus oil and grease from wells in which mineral oil as used as a lubricant or spotting fluid), and toxic plus nonconventional pollutants from discharged WBF (from both WBF components as well as from mineral oil added as a lubricant or spotting fluid).

For cuttings, a TSS value of 551 lbs/bbl was used in the WBF analysis for the final SBF rule. The oil and grease contribution from mineral oil was calculated based on an assumed 5% (v/v) value of adherent drilling fluid on WBF cuttings and a mineral oil content (as a lubricant or for spotting) of 9 lbs/bbl WBF (applied to the projected number of WBF wells using mineral oil as a lubricant or spotting fluid).

For the discharged WBF, a TSS value of 131 lbs/bbl was used. The oil and grease contribution from mineral oil was the same as that used for cuttings: 9 lbs/bbl WBF. To calculate contributions of toxic and nonconventional pollutants, a value of 37.7 lbs toxics + nonconventionals/bbl was used. The contribution of toxics and nonconventionals from mineral oil was based on a value of 0.324 lbs toxics + nonconventionals/bbl mineral oil.

To assess the overall reliability of the WBF fluids and cuttings discharge volumes, and their comparability to the current discharge volumes used in this SBF rule, a comparison was conducted of calculated WBF-cuttings discharge volumes to current SBF-cuttings discharge volumes for each of the four model well types specified in the rule. This analysis assumed that WBF was used over the same interval as the SBF analysis. To estimate this volume of waste requiring disposal, a weighted average barrel-per-day estimate of WBF drilling fluid and cuttings was applied to the number of days of the SBF interval assumed for the four model well types used in this final rule. The total shallow and deep well volumes of drilling fluid and cuttings in the Gulf of Mexico (6,938 bbl and 9,752 bbl, respectively of drilling fluids; 1,475 bbl and 2,458 bbl for cuttings) were averaged over the 20-day drilling program assumed in the Offshore Development Document.

When the average daily discharges of shallow and deep wells (respectively 351 and 494 bbl fluids/day; 74 and 123 bbl cuttings/day) were combined with the number of wells of each type projected for this SBF rule (347 shallow; 488 deep), a weighted average discharge of 415 bbl WBF/day and 96 bbl WBF-cuttings/day resulted. The estimated days to fill and haul SBF wastes (10.4, 23.3, 7.6, and 13.6 days, respectively for DWD, DWE, SWD, and SWE well types) were converted to the number of days to “fill and haul” WBF wastes (i.e., because of the 50% reduction in drilling time for SBFs compared to OBFs,

these day-estimates were doubled) to estimate the duration of WBF drilling activity. Combining these day-estimates with average daily WBF-cuttings estimates, projected waste volumes of 1,999 bbl; 4,468 bbl; 1,461 bbl; and 2,611 bbl resulted for DWD, DWE, SWD, and SWE well types.

These volumes were compared to SBF volume estimates, which for DWD, DWE, SWD, and SWE well types respectively were 1,387 bbl; 3,085 bbl; 917 bbl; and 1,921 bbl. Assuming a 7.5% washout for SBF wells and a 45% washout for WBF wells, these SBF waste volumes were converted to WBF-equivalents (i.e., [SBF volumes/1.075] x 1.45) resulting in 1,871 bbl; 4,161 bbl; 1,237 bbl; and 2,591 bbl for DWD, DWE, SWD, and SWE well types. These SBF volume-based estimates ranged from 85% to 99% of the WBF estimates that are based on data in the Offshore Development Document. The comparability of these two waste volume estimates provides substantial confirmation of the validity and appropriateness of analyses combining waste volume estimates based on two different sources of data.

5. CONTROL AND TREATMENT TECHNOLOGIES

EPA investigated the technological aspects and costs of four drilling waste management technologies as potential means of complying with the proposed effluent limitations guidelines, including:

- product substitution,
- solids control equipment,
- land-based treatment and disposal, and
- onsite subsurface injection.

The following sections discuss EPA's findings regarding the current status of these technologies as applied to drilling wastes associated with SBFs and OBFs.

5.1 BPT/BCT Technology

The current BPT and BCT limitation of no free oil for drilling fluid wastes was first published on April 13, 1979 (44 FR 22069), and at that time, was based on drilling product substitution or the use of more environmentally benign products, combined with onshore disposal as the best practicable control method available. An example of product substitution is the use of WBF in place of OBF such that the discharged cuttings would pass the no-free-oil limit. Since SBF-cuttings are currently discharged in the Gulf of Mexico in compliance with the static sheen test, industry has shown the ability of SBFs to pass the static sheen test using the current shale shaker technology by varying the SBF formulation and treatment.

5.2 Product Substitution: SBF Base Fluid Selection

EPA proposed BAT and NSPS effluent limitations guidelines for three characteristics of the stock base fluid used in synthetic and other non-aqueous drilling fluids, namely: polyaromatic hydrocarbon (PAH) content, sediment toxicity, and biodegradation rate. EPA anticipated that these limitations would be achieved by product substitution of the base fluid. For the final rule EPA is establishing BAT limitations and NSPS requiring synthetic materials that form the base fluid of SBFs to meet limitations and standards on PAH content, sediment toxicity, and biodegradation.

The technology basis for meeting these limitations and standards is product substitution, or zero discharge, based on land disposal or cuttings re-injection, if these base fluid limitations are not met. The regulated toxic, conventional, and non-conventional pollutant parameters are identified below. A large range of synthetic, oleaginous, and water miscible materials are available for use as base fluids. These stock limitations on the base fluid are intended to encourage product substitution reflecting best available technology and best available demonstrated technology wherein only those synthetic materials and other base fluids which minimize potential toxic pollutant (PAH) loadings and toxicity and which maximize biodegradation may be discharged. The following sections discuss the technical basis for the limitations on stock base fluids.

5.2.1 *Currently Available Synthetic and Non-Aqueous Base Fluids*

As SBFs have developed over the past several years, the industry has come to use mainly a few primary base fluids that represent virtually all the SBFs currently used in oil and gas extraction industry. These include the internal olefins, linear alpha olefins, poly alpha olefins, paraffinic oils, C_{12}-C_{14} vegetable esters of 2-hexanol and palm kernel oil, and “low viscosity” C_8 esters. EPA has collected data and costs on these SBFs to develop the effluent limitations for the final rule. Internal olefins (IO) are a series of isomeric forms of C_{16} and C_{18} alkenes; linear alpha olefins (LAO) are a series of isomeric forms of C_{14} and C_{16} monoenes; poly alpha olefins (PAO) refers to a mixture primarily of a hydrogenated decene dimer $C_{20}H_{62}$ (95%) with lesser amounts of $C_{30}H_{62}$ (4.8%) and $C_{10}H_{22}$ (0.2%); vegetable esters are monoesters of 2-ethylhexanol and saturated fatty acids with chain lengths in the range C_8 - C_{16}; and “low viscosity” esters are esters of natural or synthetic C_8 fatty acids and alcohols. EPA also has data on other SBF base fluids, such as enhanced mineral oil, paraffinic oils (i.e., saturated hydrocarbons or “alkanes”), and the traditional OBF base fluids, mineral oil, and diesel oil.

The stock base fluid limitations and standards and discharge limitations and standards presented below are based on currently available base fluids that can be, and are, used in a wide variety of drilling situations. The promulgated limitations would be achievable through product substitution. Also, the very small number of wells that do not meet the limitations could comply with the rule through zero discharge. EPA anticipates that base fluids meeting all requirements would include vegetable esters, low viscosity esters, and internal olefins.

As stated in the April 2000 NODA, EPA considered basing the sediment toxicity and biodegradation stock limitations and standards on vegetable esters instead of the proposed C_{16}-C_{18} IO. EPA has also considered a sub-categorization of the final rule, for situations when vegetable esters are not practical and C_{16}-C_{18} IOs could be used instead. EPA considered these options due to the potential for better environmental performance of vegetable ester-based drilling fluids. However, EPA rejected the discharge option of basing stock limitations and standards on vegetable esters only because of several technical limitations that preclude the use of demonstrated esters in all areas covered by this rule. These technical limitations include: (1) high viscosity compared with typical IOs at all temperature, with an increasing difference as temperature decreases, leading to lower rates of penetration in wells and greater probability of losses due to higher equivalent circulating densities; (2) high gel strength in risers that develops when a vegetable ester-SBF is not circulated; (3) a high temperature stability limit ranging from about 225 °F to perhaps 320 °F – the exact value depends on the detailed chemistry of the vegetable ester (i.e., the acid, the alcohol) and the drilling fluid chemistry; (4) reduction of the thermal stability limit by contact with highly basic materials (e.g., lime, green cement) at elevated temperatures (i.e., a hydrolysis reaction that is impossible with other NAF); and (5) less tolerance of the muds to contamination by seawater, cement, and drill solids than is observed for IO-SBFs.[64, 65, 66, 67, 68, 69] EPA also rejected the option of sub-categorizing the use of esters. EPA could not establish a "bright line" rationale to define situations where only esters should be the benchmark fluid. EPA considered many of the engineering factors used for selection of a drilling fluid (e.g., rig size and equipment; formation characteristics; water depth and environment; lubricity, rheological, and thixotropic requirements) and determined that no sub-categorization was possible because the Agency could not specify the combination of factors where esters would meet all technical requirements.

EPA also considered basing sediment toxicity and biodegradation stock limitations and standards on low viscosity esters. However, these esters have not been well demonstrated by full scale use in drilling operations. EPA has received information on only one well section drilled with low viscosity esters. The performance of this low viscosity ester well section was compared to that of another well section in the same location where C_{16}-C_{18} IOs were used and showed that the low viscosity ester had: (1) comparable or better equivalent circulating densities (i.e., acceptable fluid properties); and (2) faster ROP through better

hole cleaning and higher lubricity (i.e., required fewer days to drill to total depth, leading to less NWQI and overall drilling costs). Low viscosity esters are relatively new base fluids and have only recently been available to the market.

Comments to the April 2000 NODA state that laboratory-scale evaluations, which were designed to simulate Gulf of Mexico conditions to which a fluid may be exposed, indicated that low viscosity esters have several beneficial technical properties:

- They demonstrate similar or better viscosity than C_{16}-C_{18} IOs.
- They can be used to formulate stable low viscosity ester-SBFs up to 300 °F.
- They can be used to formulate low viscosity ester-SBFs to 16.0+ lbs/gal mud weight.
- They reduce the volume of base fluid discharged because the oil/water ratios can be reduced to 70/30.
- They have a high tolerance to drilled solids.
- They make it easier to break circulation flat gels, minimizing initial circulation pressures and subsequent risk of fracture.
- They have a high tolerance to seawater contamination.
- Their rheological properties can be adjusted by use of additives to suit specific conditions.[70]

Despite the results from the laboratory evaluation and the one well drilling section, EPA does not believe it has enough information to conclude that low viscosity esters can be used in all (or nearly all) drilling conditions on the OCS (e.g., differing formations, water depths, and temperatures). Therefore, EPA rejected the option of basing sediment toxicity and biodegradation stock limitations and standards on low viscosity esters only. However, EPA is sufficiently satisfied that esters provide better environmental performance (e.g., sediment toxicity, biodegradation) and are available for use in a number of drilling operations. Consequently, EPA is promulgating higher retention on cuttings discharge limitations to encourage operators to use esters whenever possible.

5.2.2 *PAH Content of Base Fluids*

EPA proposed to establish a PAH content limitation of 0.001 percent, or 10 parts per million (ppm), weight percent PAH expressed as phenanthrene, as measured by EPA Method 1654A.[26] EPA is concerned about the PAH content of base fluids because PAHs are comprised of toxic priority pollutants. Producers of several SBF base fluids have reported to EPA that their base fluids are free of PAHs,[27] including: linear alpha olefins, vegetable esters, certain enhanced mineral oils, synthetic paraffins, certain non-synthetic

paraffins, and others. In contrast, diesel oil typically contains 5% to 10% PAH; mineral oil typically contains about 0.35% PAH.[27] PAHs typically found in diesel and mineral oils include toxic priority pollutants (e.g., fluorene, naphthalene, phenanthrene, and others) and nonconventional pollutants (e.g., alkylated benzenes and biphenyls).

For the final rule, EPA has determined that a PAH BAT limitation and NSPS are important components of the final regulation because they control the discharge of priority and nonconventional pollutants such as naphthalene, phenanthrene, alkylated naphthalenes, and biphenyls. For the final rule, the limitation of PAH content for the Gulf of Mexico and Offshore California is a weight-to-weight ratio of PAH (as phenanthrene) to the stock base fluid. The PAH weight ratio limit is 0.001 percent, or 10 parts per million (ppm). This limitation is based on the availability of base fluids that are free of PAHs and the detection of the PAHs by EPA Method 1654A, which refers to a method for measuring the "PAH Content of Oil by High Performance Liquid Chromatography with a UV Detector" published in "Methods for the Determination of Diesel, Mineral and Crude Oils in Offshore Oil and Gas Industry Discharges" [EPA-821-R-92-008], available from National Technical Information Service at: (703) 605-6000. As originally proposed in February 1999 (64 FR 5503), EPA is promulgating the use of the EPA Method 1654A for compliance with this PAH content BAT limitations and NSPS.

5.2.3 *Sediment Toxicity of Base Fluids*

EPA proposed a sediment toxicity stock base fluid limitation that would allow only the discharge of SBF-cuttings using base fluids as toxic or less toxic, but not more toxic, than C_{16}-C_{18} internal olefins. Based on information available to EPA at that time, the only base fluids that would attain this limitation were IOs and vegetable esters.

Various researchers have performed toxicity testing of the synthetic base fluids with the 10-day sediment toxicity test (ASTM E1367-92) using a natural sediment and *Leptocheirus plumulosus* as the test organism.[25, 28, 29] The synthetic base fluids have been shown to have lower toxicity than diesel and mineral oil. Among the synthetic and other oleaginous base fluids some are more toxic than others (see 65 FR 21550).[71] Still et al. reported the following 10-day LC_{50} results, expressed as mg base fluid/Kg dry sediment for diesel oil, mineral oil, an IO, and a PAO: diesel LC_{50} = 850 mg/kg, enhanced mineral oil LC_{50} = 251 mg/kg, internal olefin LC_{50} = 2,944 mg/kg, and poly alpha olefin LC_{50} = 9,636 mg/kg. Similar results have been reported by Hood et al.[28] Candler et al. performed the 10-day sediment toxicity test with the amphipod *Ampelisca abdita* and again obtained very similar results as follows: diesel LC_{50} = 879 mg/kg,

enhanced mineral oil LC_{50} = 557 mg/kg, internal olefin LC_{50} = 3,121 mg/kg, and PAO LC_{50} = 10,680 mg/kg.[29]

None of these researchers reported sediment toxicity values for vegetable esters. Recently, industry has evaluated a number of base fluids including vegetable esters.[30,31] While the absolute values are not comparable because the tests were performed on the drilling fluid and not just the base fluid, the results showed the vegetable ester to be less toxic that the internal olefin.

Researchers in the United Kingdom and Norway investigating effects in the North Sea have conducted sediment toxicity tests on other organisms, namely *Corophium volutator* and *Abra alba*.[32] Similar trends were seen in the measured toxicity, with vegetable ester having less sediment toxicity than PAO and IO.

While the PAOs were found to have the lowest toxicity of the measured base fluids (excluding vegetable esters), at proposal EPA did not base the toxicity limitation on PAOs because they biodegrade much more slowly and so are unlikely to pass the biodegradation limitation (see below, Section 5.2.4). EPA proposed to generate and gather additional data comparing the toxicity of the various base fluids. If vegetable esters were found to have significantly reduced toxicity compared to the other base fluids, EPA reserved the option to base the toxicity limitation on vegetable esters. EPA noted its concerns, however, over the technical performance and possible non-water quality implications of using vegetable esters as the only available technology that would meet the stock base fluid limitations, as discussed below under biodegradation.

For this final rule, EPA is regulating the sediment toxicity for base fluids as a non-conventional pollutant parameter and as an indicator for toxic pollutants of base fluids. It has been shown, during EPA's development of the Offshore Guidelines, that establishing limits on toxicity encourages the use of less toxic drilling fluids and additives. The selected discharge option (BAT/NSPS Option 2) includes a base fluid sediment toxicity stock limitation, as measured by the 10-day sediment toxicity test (ASTM E1367-92) using either natural sediment or formulated sediment and *Leptocheirus plumulosus* as the test organism. The SBF rulemaking record indicates that drilling fluids that meet the stock base fluid sediment toxicity limitation and standard (e.g., internal olefins, esters) will meet all drilling requirements in the waters to which this rule applies.

For this final rule, EPA is promulgating a sediment toxicity stock base fluid limitation that only allows the discharge of SBF-cuttings using SBF base fluids that have toxicity less than or equal to C_{16}-C_{18}

IOs. Alternatively, this limitation can be expressed as a "sediment toxicity ratio," defined as the 10-day LC_{50} of C_{16} - C_{18} IOs divided by the 10-day LC_{50} of stock base fluid being tested. EPA is promulgating a sediment toxicity ratio of less than or equal to 1.0 for the final rule. Compliance with this limitation is determined by the 10-day *Leptocheirus plumulosus* sediment toxicity test [i.e., ASTM E1367-92: "Standard Guide for Conducting 10-day Static Sediment Toxicity Tests With Marine and Estuarine Amphipods" (incorporated by reference and available from ASTM, 100 Bar Harbor Drive, West Conshohocken, PA 19428), supplemented with the preparation procedure specified in Appendix 3 of Subpart A of 40 CFR 435]. As originally proposed in February 1999 (64 FR 5503) and re-stated in April 2000 (65 FR 21549), EPA is promulgating the use of the ASTM E1367-92 method for compliance with this sediment toxicity BAT limitation and NSPS.

EPA finds this limit to be technically available because information in the rulemaking record supports that vegetable esters, low viscosity esters, and internal olefins. together have performance characteristics enabling them to be used in a wide variety of drilling situations offshore. Marketing data given to the EPA shows that, at least for certain of the major drilling fluid suppliers, internal olefin SBFs are currently the most popular SBFs used in the Gulf of Mexico. Since the February 1999 Proposal, EPA and other researchers conducted numerous 10-day and 96-hour *L. plumulosus* sediment toxicity tests on various SBF base fluids with natural and formulated sediments. EPA anticipates that the base fluids meeting this limitation include vegetable esters, low viscosity esters, internal olefins, and some PAOs (see 65 FR 21550).[71]

EPA's *L. plumulosus* sediment toxicity tests confirm that although numeric toxicity results can vary substantially from test to test, the relative toxicities of the base fluids remain consistent. These tests have found that the order of sediment toxicity, from least toxic to most toxic, is consistently as follows: esters > IOs > LAOs > paraffin > mineral oil > diesel. Therefore, variability in numeric LC_{50} values would not affect an assessment of a test base fluid's sediment toxicity against the sediment toxicity ratio limitation because the ratio is dependent on relative toxicities.

Initially, EPA conducted sediment toxicity tests on whole base fluids. In these initial tests EPA used two test durations (i.e., 10-day and 96-hour) and natural sediment collected from Galveston Bay, Texas. The results are presented in the Table VII-9.

TABLE VII-9
EPA DETERMINATION OF SEDIMENT TOXICITY FOR BASE FLUIDS

Drilling Base Fluid		LC50 (mg/Kg)	95% Confidence Interval
96-Hour Test	IO	>8000 [a]	NA
	LAO	2921	2260 - 3775
	Ester	7686	7158 - 8253
	Mineral Oil	436	391 - 485
	Paraffin	2263	1936 - 2644
10-Day Test	IO	2530	2225 - 2876
	LAO	1208	1089 - 1339
	Ester	4275	3921 - 4662
	Mineral Oil	176	163 - 190
	Paraffin	1151	1038 - 1276

[a] Test result fell outside of the test concentration range.

In subsequent tests, EPA evaluated the sediment toxicity of whole mud formulations of base fluids. Again, EPA conducted both 10-day and 96-hour test using natural sediment collected from Galveston Bay, Texas. The results (see Table VII-10) show that whole mud formulations of base fluids, when using the 96-hour test duration, exhibit the same relative sediment toxicities as pure base fluids. EPA is specifying the use of the 96-hour test duration for point-of-discharge monitoring in order to allow operators to continue drilling operations while the sediment toxicity test is being conducted on the discharge drilling fluid.

TABLE VII-10
EPA DETERMINATION OF SEDIMENT TOXICITY FOR WHOLE MUD FORMULATIONS WITH SYNTHETIC BASE FLUID

Drilling Base Fluid		LC50 (mg/Kg)	95% Confidence Interval
96-Hour Test	IO	>24 [a]	NA
	LAO	7.58	4.54 - 12.7
	Ester	39.4	33.6 - 47.6
	Diesel	1.15	1.09 - 1.21
10-Day Test	IO	3.28	2.78 - 4.97
	LAO	3.09	1.82 - 5.26
	Ester	3.19	2.96 - 3.44
	Diesel	0.46	0.39 - 0.55

[a] Test result fell outside of the test concentration range.

Parallel studies conducted by Industry analytical workgroups also show that the relative sediment toxicities of base fluids are consistent. Table VII-11 presents a summary of industry results submitted to EPA.

TABLE VII-11
INDUSTRY SEDIMENT TOXICITY RESULTS

Drilling Base Fluid		LC_{50} (mg/Kg)	95% Confidence Interval
Baroid-Generated Data:			
96-Hour Test	Diesel	453	416 - 493
	IO	876	442 - 1663
	LAO	490	291 - 924
	Ester	>20000	NA
	Ester (Low viscosity)	>20000	NA
10-Day Test	Diesel	230	209 - 251
	IO	564	447 - 639
	LAO	338	294 - 378
	Ester	>10000	NA
	Ester (Low viscosity)	2447	2197 - 2701
M-I Driling Fluid-Generated Data:			
96-Hour Test	Diesel	566	510 - 629
	IO	3686	2890 - 4893

EPA has selected the C_{16}-C_{18} IO as the basis for the sediment toxicity ratio limitation and standard instead of the vegetable ester or low viscosity ester for two reasons: (1) EPA does not believe that vegetable esters can be used in all drilling situations; (2) EPA has insufficient field testing information demonstrating that low viscosity esters can be used in all drilling situations. Consequently, operators may not be encouraged to switch from OBFs or WBFs to SBF if only vegetable ester- or low viscosity ester-SBFs could be discharged. As previously stated, EPA is promoting the appropriate conversion from OBF- and WBF-drilling to SBF-drilling to encourage the reduction of pollutant loadings and NWQIs. Due to demonstrated and potential technical limitations of vegetable ester or low viscosity esters, EPA estimates that the pollutant loadings and NWQIs associate with establishing vegetable esters or low viscosity esters as the basis for stock limitation would be comparable to the pollutant loadings and NWQIs associated with a zero discharge option for all SBF-cuttings. EPA finds these increases in pollutant loadings and NWQIs unacceptable.

5.2.4 *Biodegradation Rate of Base Fluids*

EPA proposed a limitation of biodegradation rate for the base fluid (as determined by the solid phase test),[33] equal to or faster than the rate of a C_{16}-C_{18} IO. The proposed method was provided in Appendix 4 to Subpart A of the proposed amendments to 40 CFR Part 435. With this proposed limitation, the base fluids currently available for use include vegetable ester, LAOs, IOs, and possibly certain linear paraffins, EPA further concluded that applying the biodegradation rate, PAH content, and sediment toxicity limitations on stock base fluid, available data indicated that IOs and vegetable esters would attain all three limitations.

EPA also investigated an alternative numerical limitation of a minimum biodegradation rate of 68 percent base fluid dissipation at 120 days for the standardized solid phase test. If EPA chose to pursue this approach, it expected that it may need to revise this numerical limitation as additional test results were generated and evaluated.

Similar to SBF sediment toxicity, in order to minimize the effect of test variability, the final limitations and standards are based on comparative testing rather than numerical limitations. Therefore, if SBFs based on fluids other than IOs and vegetable esters were to be discharged with drill cuttings, data showing the biodegradation of both the base fluid and the IO standard, generated in the same series of tests, would be required. EPA preferred this approach rather than a numerical limitation at proposal because of the limited data available to EPA upon which to base a numerical limitation. EPA considered this approach to be an interim solution to this data sufficiency problem at the time of proposal because it still provided a limitation based on the performance of available technologies.

Rates of biodegradation for synthetic and mineral oil base fluids had been determined by both a solid phase and a simulated seabed test; relative rates of biodegradation between these two tests are in agreement.[34] These tests have found that the order of degradation, from fastest to slowest, is as follows: vegetable esters and low viscosity esters > LAOs > IOs > linear paraffin > mineral oil > PAOs.

At proposal, EPA had selected IOs as the basis for the biodegradation rate limitation instead of vegetable esters for two reasons -- technical performance and non-water quality environmental impacts. SBFs formulated with vegetable esters have higher viscosity. This property makes vegetable ester SBFs more difficult to pump, and may render them impractical for deep water drilling. The cooler temperatures in deep water drilling further increase viscosity, and the long drill string at this higher viscosity requires higher pump pressures to circulate the SBF. Cost also was recognized as a factor in encouraging the use of

SBFs in place of OBFs. Industry representatives had told EPA that vegetable ester SBF costs about twice as much as an IO SBF.[24] EPA believed that if the lower cost IO SBFs could be discharged, more wells currently drilled with OBF would be encouraged to convert to SBF than if only the more expensive vegetable ester SBFs could be discharged. This OBF-to-SBF conversion is preferable to improve non-water quality environmental impacts. If continued research showed that vegetable esters had significantly reduced toxicity in addition to their faster rate of biodegradation, EPA reserved the option to consider more stringent stock base fluid limitations to favor the use of vegetable ester SBFs for the final rule.

For the final rule, EPA is regulating the biodegradation in base fluids as an indicator of the extent, in level and duration, of the toxic effect of toxic pollutants and nonconventional pollutants present in base fluids (e.g., enhanced mineral oils, IOs, LAOs, PAOs, paraffinic oils, C_{12}-C_{14} vegetable esters of 2-hexanol and palm kernel oil, "low viscosity" C_8 esters, and other oleaginous materials). Based on results from seabed surveys at sites where various base fluids have been discharged with drill cuttings, EPA believes that the results from the three biodegradation tests used during the rulemaking (e.g., solid phase test, anaerobic closed bottle biodegradation test, respirometry biodegradation test) are indicative of the relative rates of biodegradation in the marine environment. EPA puts strong emphasis on the use of the anaerobic biodegradation (closed bottle) test based on the deep water and cuttings piles characteristics which promote anaerobic rather than aerobic degradation. In addition, EPA thinks the biodegradation parameter correlates strongly with the rate of recovery of the seabed where OBF- and SBF-cuttings have been discharged. The various base fluids vary widely in biodegradation rates, as measured by the three biodegradation methods. However, the relative ranking of the base fluids under consideration remain relatively similar across all three biodegradation tests investigated under this rulemaking.

Since proposal, EPA has evaluated four sets of biodegradation data. EPA generated one data set using the solid phase test, and industry generated one data set for each of the three tests that were noticed in the proposal and NODA (i.e., solid phase test, anaerobic closed bottle test, and respirometry test for biodegradation).

EPA conducted its solid phase test over 112 days on 6 base fluids (ester, IO, LAO, mineral oil, PAO, and paraffin) at 3 initial spike concentrations (1000 mg/Kg, 2000 mg/Kg, and 5000 mg/Kg). The results (see Tables VII-12 through 14 and Figures VII-1 through VII-3) of this test support the historically observed rankings of the biodegradation rates for these test fluids (i.e., ester > LAO > IO > paraffin > mineral oil > PAO).

TABLE VII-12
EPA SOLID PHASE TEST (1000 mg/Kg)

Elapsed Time of Test	Concentration (mg/Kg)					
	Ester	LAO	IO	Paraffin	Mineral Oil	PAO
Day 0	751	946	1005	1045	1161	890
Day 14	424	904	879	828	907	917
Day 28	265	799	820	846	892	903
Day 56	152	833	739	981	997	1065
Day 84	144	487	529	726	835	928
Day 112	11	314	451	624	785	948

FIGURE VII-1

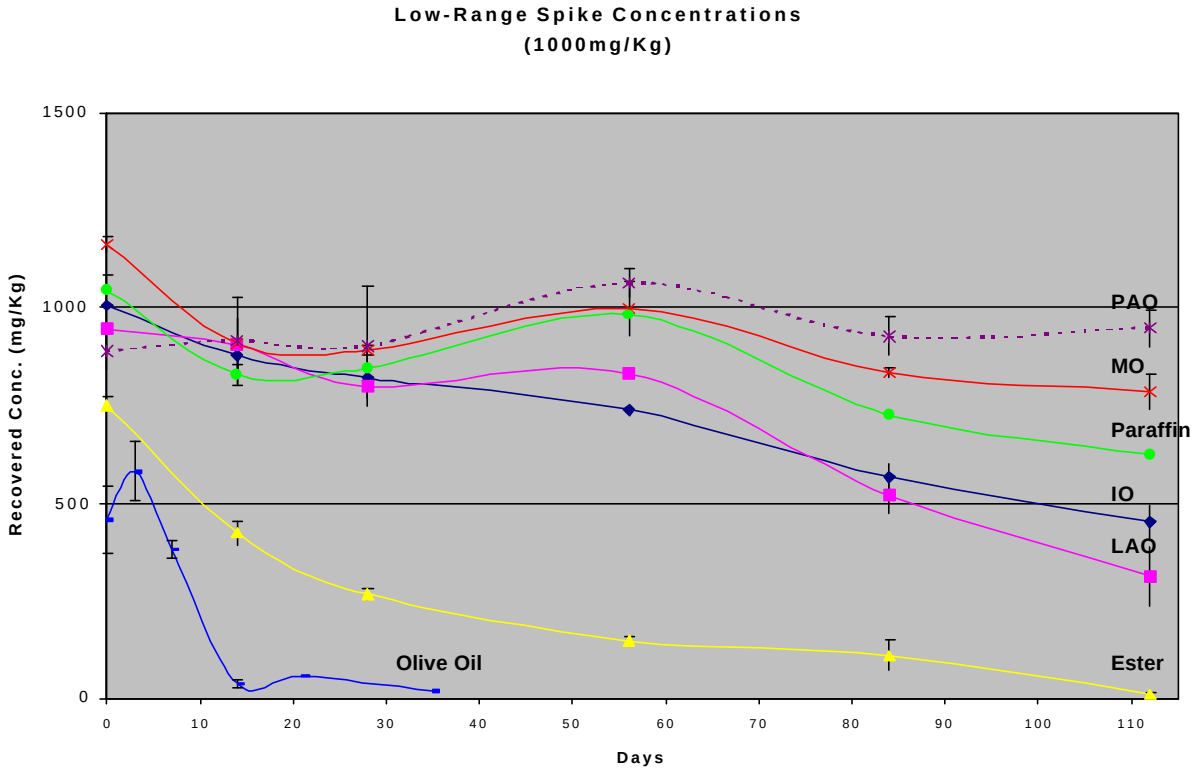

TABLE VII-13
EPA SOLID PHASE TEST (2000 mg/Kg)

Elapsed Time of Test	Concentration (mg/Kg)					
	Ester	LAO	IO	Paraffin	Mineral Oil	PAO
Day 0	1352	1949	2027	2060	2165	1964
Day 14	887	1512	1831	1670	1855	1796
Day 28	691	1646	1732	1754	1799	1786
Day 56	565	1676	1578	2044	1943	2039
Day 84	231	1199	1388	1551	1864	1899
Day 112	152	949	1040	1487	1733	1865

FIGURE VII-2

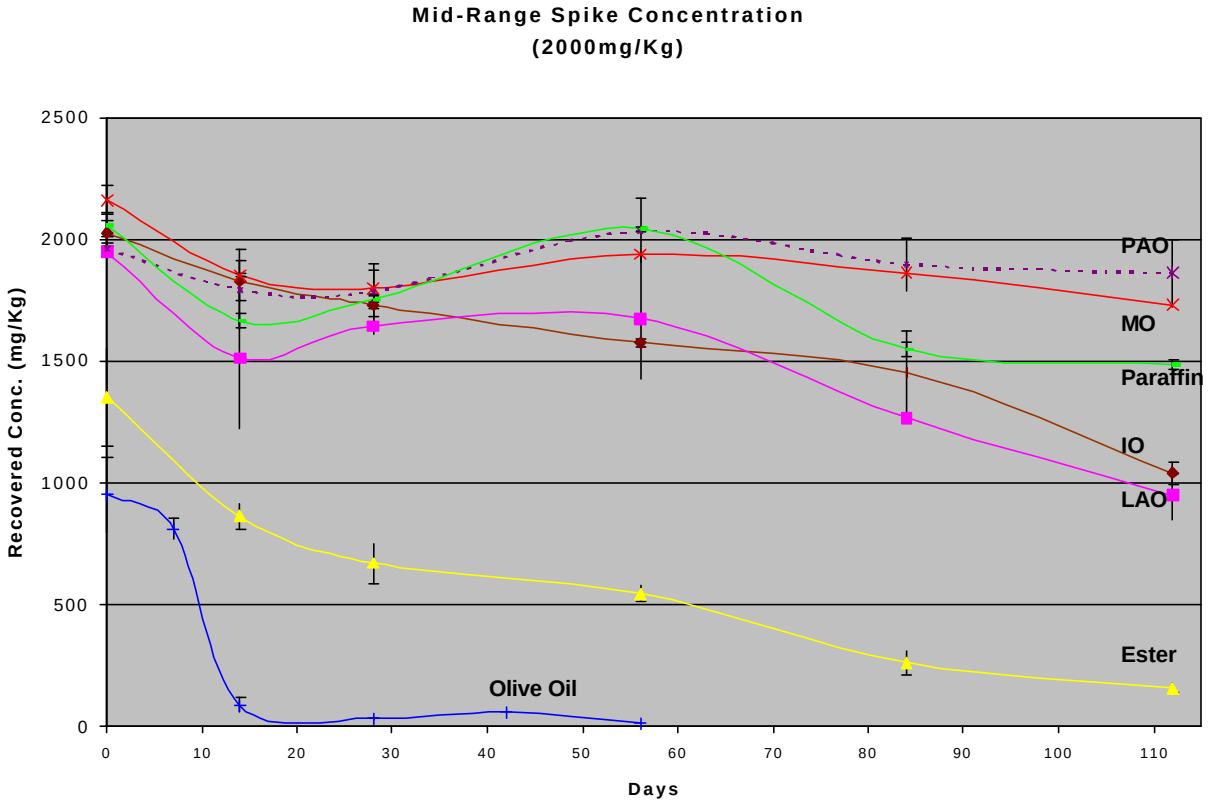

TABLE VII-14
EPA SOLID PHASE TEST (5000 mg/Kg)

Elapsed Time of Test	Concentration (mg/Kg)					
	Ester	LAO	IO	Paraffin	Mineral Oil	PAO
Day 0	3742	4717	4620	4864	5291	5211
Day 14	2331	4277	4421	4199	4255	4916
Day 28	2139	4050	4075	4190	4396	4761
Day 56	1619	4474	3649	4959	4898	5318
Day 84	1241	3302	3450	4132	4673	4970
Day 112	712	3209	3486	3933	4457	4840

FIGURE VII-3

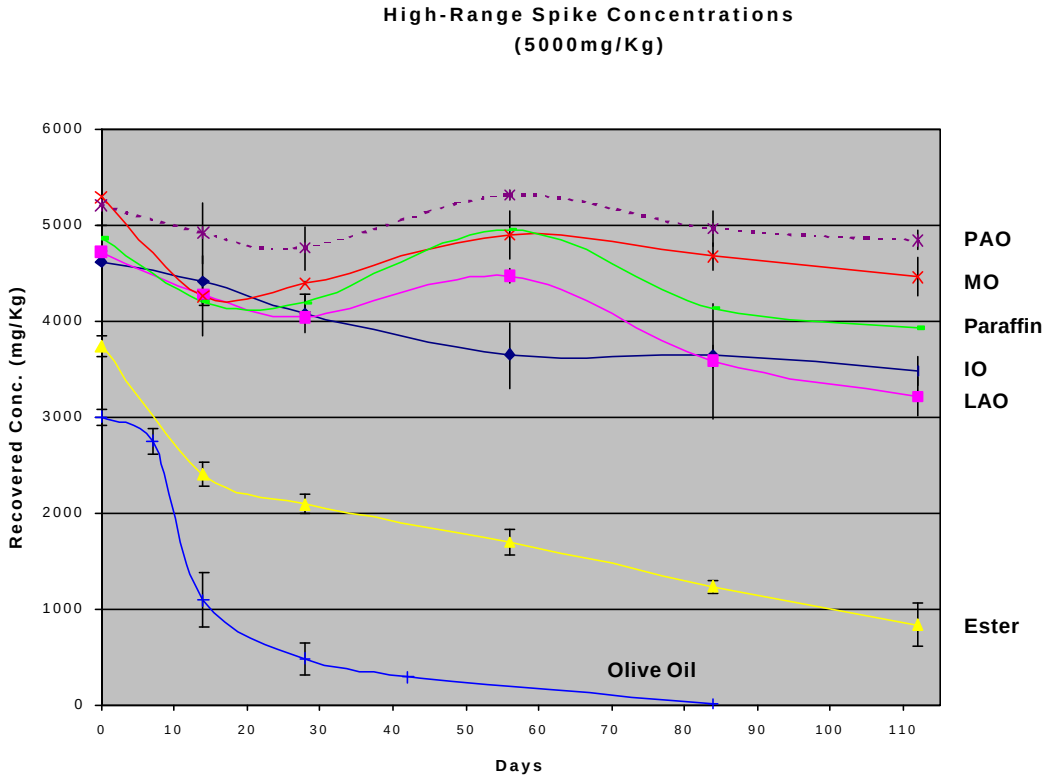

The industry data, however, did not reproduce the historical results associated with the solid phase test. Instead, the industry data indicated a rapid disappearance of all fluids. Based on an analysis of their data and followup investigation, EPA and the industry workgroup determined that industry's results (see Figure VII-4) were affected by physical loss of the base fluids rather than loss through biodegradation. The solid phase test's susceptibility to physical loss of fluid into the test environment is one reason EPA chose to specify the use of the anaerobic closed bottle test in this rule.

FIGURE VII-4
INDUSTRY SOLID PHASE TEST RESULTS

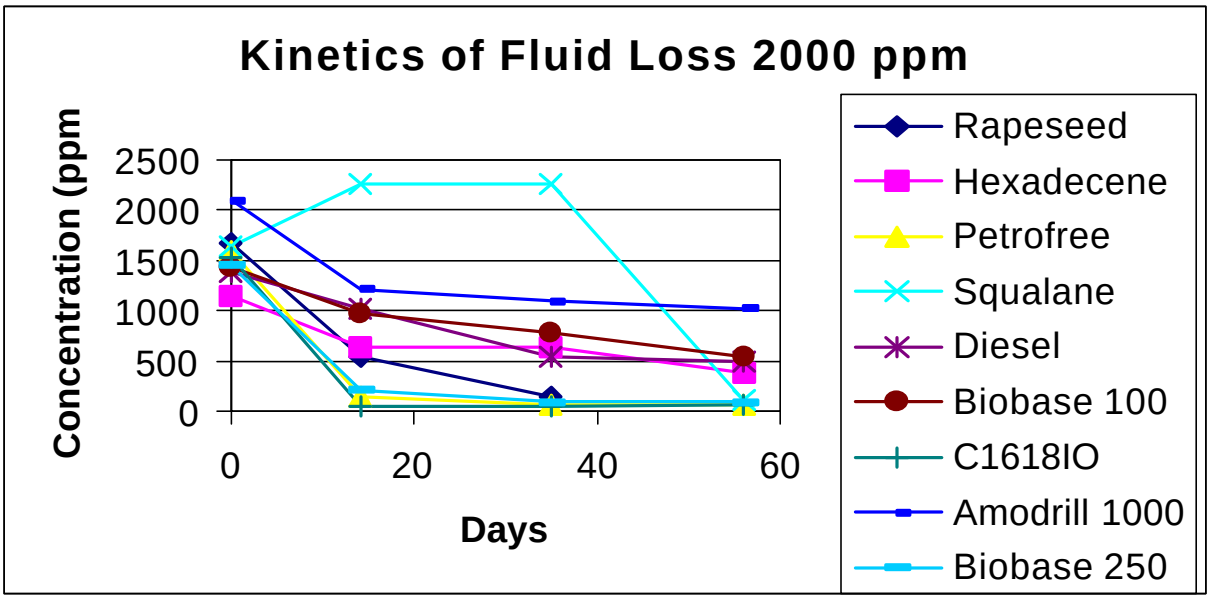

The industry also submitted data (see Table VII-15 and Figure VII-5) to show that the relative rankings of biodegradation rates as determined by the anaerobic closed bottle test follows the historical trend. In addition, the closed bottle test offers a clear advantage over the other two biodegradation tests in terms of cost per analysis and ease of use.

TABLE VII-15
INDUSTRY MARINE ANAEROBIC CLOSED BOTTLE BIODEGRADATION TEST RESULTS

Elapsed Time of Test	Cumulative Gas Production Over Time (ml)					
	Olive Oil	C_{16}-C_{18} IO	C_{14}-C_{16} LAO	Synthetic Paraffin	C_{30}	Blank Control
Day 0	0.00	0.00	0.00	0.00	0.00	0.00
Day 5	9.29	2.77	3.67	3.32	3.32	3.88
Day 25	50.00	8.59	10.00	7.05	6.62	5.99
Day 33	103.50	12.50	15.00	10.00	8.00	8.30
Day 67	150.41	18.38	22.15	13.67	10.45	11.12
Day 77	152.50	22.21	26.46	15.83	12.42	12.28
Day 95	160.61	24.60	32.74	18.16	12.18	12.98
Day 113	162.88	29.71	42.91	21.14	12.80	13.30
Day 132	164.78	39.74	55.50	23.17	13.38	14.01
Day 155	169.18	59.00	88.16	27.19	15.42	16.07
Day 194	167.74	92.36	114.50	25.82	13.97	14.57
Day 231	171.57	104.50	138.22	29.49	17.47	17.63
Day 271	175.58	119.88	151.20	33.33	21.63	22.11

FIGURE VII-5
INDUSTRY ANAEROBIC CLOSED BOTTLE TEST RESULTS

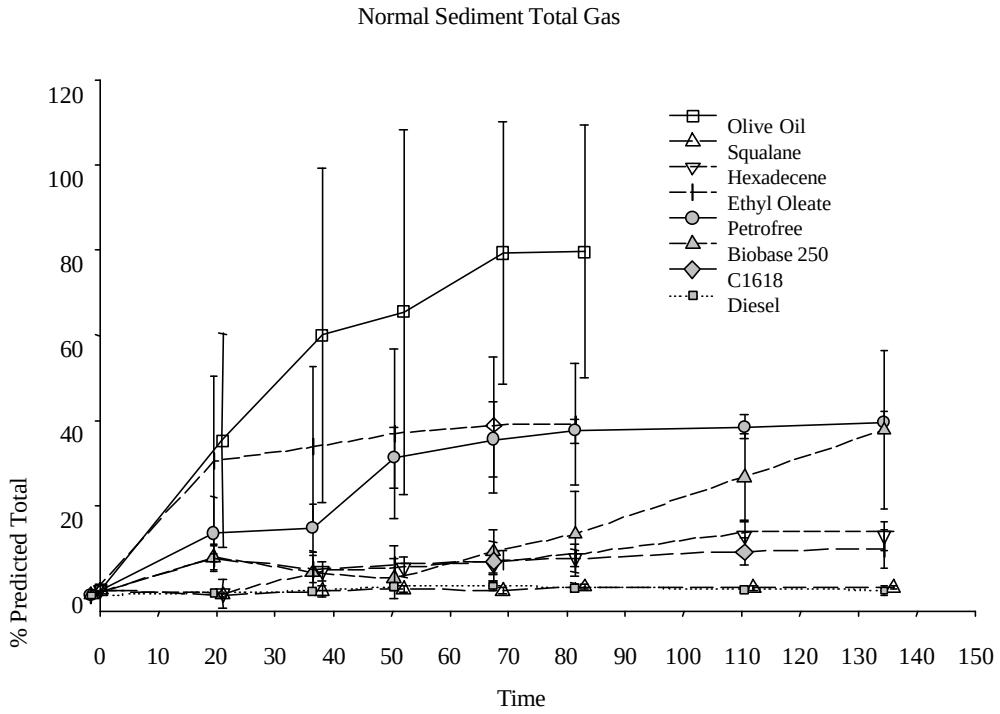

Finally, industry-submitted data on the respirometry test for biodegradation also show that the respirometry test ranks the relative biodegradation rates of base fluids according to the historical data (see Table VII-16 and Figure VII-6). While the respirometry test shows promise, it is only in the early stages of development, and its procedures have not been finalized. Therefore, EPA is not specifying the use of this test for monitoring compliance with the biodegradation limit.

TABLE VII-16
INDUSTRY RESPIROMETRY TEST RESULTS

	CO2 % Deg	O2 % Deg
Blank	0%	0%
Squalane	3%	-0.8%
Rapeseed Oil	75%	84.8%
Diesel	14.6%	4.4%
LAO	45.2%	37.1%
IO	41.5%	44%
Ester	72.7%	77.4%

FIGURE VII-6
INDUSTRY RESPIROMETRY TEST RESULTS

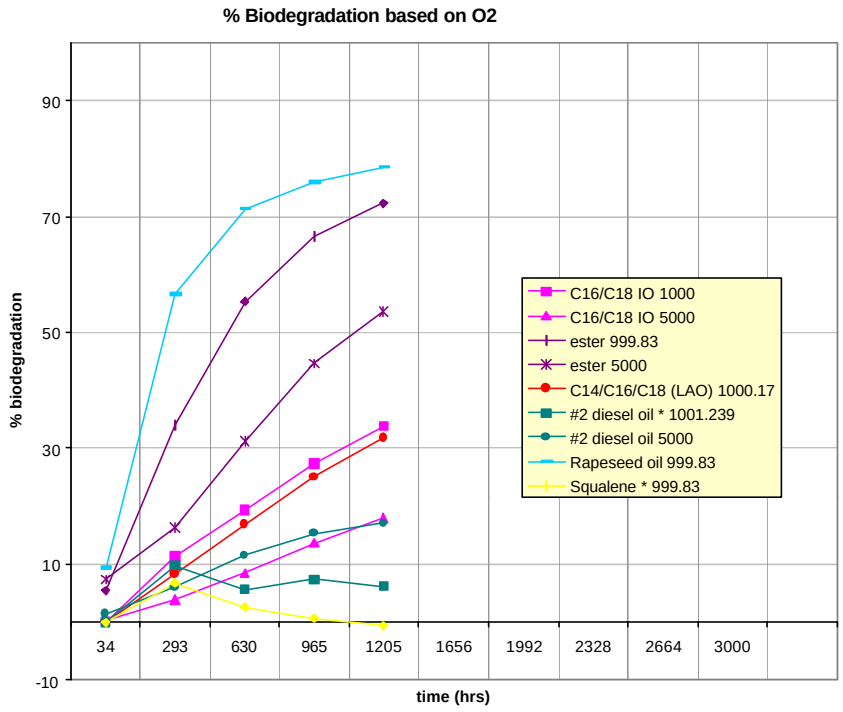

As originally proposed in February 1999 (64 FR 5504) and re-stated in April 2000 (65 FR 21550), for the final rule EPA is promulgating a BAT limitation and NSPS to control the minimum amount of biodegradation of base fluid. The selected discharge option (BAT/NSPS Option 2) includes a base fluid

biodegradation stock limitation, as measured by the marine anaerobic closed bottle biodegradation test (i.e., ISO 11734).

The biodegradation stock base fluid limitation only allows the discharge of SBF-cuttings using SBF base fluids that degrade as fast or greater than C_{16}-C_{18} IOs. Alternatively, this limitation could be expressed in terms of a "biodegradation rate ratio" that is defined as the percent degradation at 275 days of C_{16}-C_{18} IOs divided by the percent degradation of stock base fluid being tested. EPA is promulgating a biodegradation rate ratio of less than 1.0. As discussed in April 2000, EPA is promulgating the use of the marine anaerobic closed bottle biodegradation test (i.e., ISO 11734:1995) with modifications for compliance with this biodegradation BAT limitation. With this limitation the base fluids currently available for use include vegetable ester, low viscosity esters, LAOs, and IOs.

The marine anaerobic closed bottle biodegradation test (i.e., ISO 11734:1995) is incorporated by reference into the effluent limitation guidelines and is available from the American National Standards Institute, 11 West 42nd Street, 13th Floor, New York, NY 10036. Additionally, EPA modified the marine anaerobic closed bottle biodegradation test to make the test more applicable to a marine environment. These modifications are listed in Appendix 4 of Subpart A of 40 CFR 435 and included: (1) the laboratory shall use sea water in place of freshwater; (2) the laboratory shall use marine sediment in place of digested sludge as an innoculum; and (3) the laboratory shall run the test for 275 days.

EPA selected the closed bottle test because it models the ability of a drilling fluid to degrade anaerobically. Industry comments to the April 2000 NODA report the results of seabed surveys.[66] These seabed surveys and the scientific literature indicate that the environments under cuttings piles are anaerobic and that the recovery of seabeds did not occur in acceptable periods of time when drilling fluids cannot anaerobically degrade (e.g., diesel oils, mineral oils). The scientific literature also indicates that there is no known mechanism for initiation of anaerobic alkane biodegradation.[72] The general anaerobic microbiology literature indicates that metabolic pathways are just beginning to be determined for anaerobic biodegradation of linear alkanes. The anaerobic biodegradability of the SBF base fluid represents an essential prerequisite for the prevention of long-term persistence of SBFs and deleterious impacts on marine sediments.[73] Therefore, EPA considers the control of anaerobic degradation as crucial in ensuring the biodegradation of SBF under cuttings piles and other anaerobic environments for the recovery of benthic environments in an acceptable period.

EPA finds this limit to be technically available because information in the rulemaking record supports that vegetable esters, low viscosity esters, and IOs have performance characteristics enabling them

to be used in a wide variety of drilling situations offshore. Marketing data given to the EPA shows that, at least for certain of the major drilling fluid suppliers, internal olefin SBFs are currently the most popular SBFs used in the Gulf of Mexico.

5.2.5 *Bioaccumulation*

EPA also considered establishing a BAT limitation and NSPS that would limit the base fluid bioaccumulation potential. The regulated parameters would be the non-conventional and toxic priority pollutants that bioaccumulate. EPA reviewed the current literature to identify the bioaccumulation potential of various base fluids. After this review EPA determined that SBFs are not expected to significantly bioaccumulate because of their extremely low water solubility and consequent low bioavailability. Their propensity to biodegrade makes them further unlikely to significantly bioaccumulate in marine organisms.

EPA identified that hydrophobic chemicals (e.g., ester-SBF base fluids) that have a log K_{ow} less than about 3 to 3.5 may bioaccumulate rapidly but not to high concentrations in tissues of marine organisms, particularly if they are readily biodegradable into non-toxic metabolites.[74] Hydrophobic chemicals (e.g., C_{16}-C_{18} IOs, various PAOs, and C_{18} n-paraffins) with a log K_{ow} greater than about 6.5 to 7 do not bioaccumulate effectively from the water, because their solubility in both the water and lipid phases is very low.[74] Finally, the degradation by-products of SBF base fluids (e.g., alcohols) are likely to be more miscible with water than the parent substances, resulting in degradation by-products partitioning into the water column and being diluted to toxicologically insignificant concentrations.

Based on current information, EPA believes that the stock base fluid controls on PAH content, sediment toxicity, and biodegradation rate being promulgated today are sufficient to only allow the discharge of base fluids (e.g., esters, internal olefins) with lower bioaccumulation potentials (i.e., log $K_{ow} < 3$ to 3.5 and log $K_{ow} > 6.5$ to 7).

5.2.6 *Product Substitution Costs*

EPA finds that the promulgated stock base fluid controls are economically achievable. Industry has commented to EPA that while the synthetic base fluids are more expensive than diesel and mineral oil base fluids, the savings in being able to discharge the SBF-cuttings versus land disposal or injection of OBF-cuttings (in order to meet current regulations) more than offsets the increased cost of SBFs. Moreover, the reduced time to complete a well with SBF as compared with OBF- and WBF-drilling can be significant (i.e., days to weeks). This reduction in time translates into lower rig rental costs for operators. In addition, the

use of more efficient solids removal technology (used as a basis for the BAT and NSPS retention limitations) increases the recovery of SBF fluid which adds to the overall savings. Thus, it reportedly costs less for operators to invest in the more expensive SBF provided it can be discharged. The stock base fluid limitations promulgated above allow use of the currently widely used SBFs based on internal olefins ($160/bbl), vegetable esters ($250/bbl), and low viscosity esters ($300/bbl).[75] For comparison, diesel oil-based drilling fluid costs about $70/bbl, and mineral oil-based drilling fluid costs about $90/bbl. According to industry sources, currently in the Gulf of Mexico the most widely used and discharged SBFs are, in order of use, based on internal olefins, linear alpha olefins, and vegetable esters. Since the stock limitations allow the continued use of the IO- and ester-SBFs or other fluids with equivalent toxicity and biodegradation properties and meeting the PAH limitation, EPA attributes no additional cost due to the stock base fluid requirements other than monitoring (testing and certification) costs. EPA anticipates that discharges could satisfy the PAH requirements by having suppliers monitor each batch of stock SBF and that they could satisfy stock sediment toxicity and biodegradation limitations and standards by having suppliers monitor once annually.

5.3 Solids Control: Waste Minimization/Pollution Prevention

The function of a solids control system, regardless of the type of drilling fluid in use, is to separate drill cuttings from the drilling fluid so as to maintain the required rheology of the drilling fluid. Drilling fluid properties degrade as the amount of fine particles in the drilling fluid increases. Solids control equipment can cause an increase in the amount of fine particle solids in the drilling fluid due to the breakdown of larger drill cuttings as they pass over and through vibrating screens, centrifuges, and other separation devices. Therefore, the solids control system is designed and operated to limit the mechanical destruction of the cuttings while maximizing the removal of undesirable solids from the drilling fluid.

The type of drilling fluid in use affects the ease with which drill solids can be separated. Cuttings are generally more difficult to remove from WBFs than SBFs because of the tendency for solids to disperse in the water phase of the WBFs. The approach to solids control can therefore be markedly different for WBF systems compared to OBF or SBF systems. Additional equipment such as hydrocyclones and chemical flocculation units are sometimes employed for WBFs.[16] Such separation steps are generally not necessary when SBFs or OBFs are used for drilling, and are often avoided because they result in additional losses of drilling fluid with the discarded solids waste streams. EPA has also learned that there is no distinguishable difference in the separability of cuttings from OBF as compared to SBF.[20,36]

A typical solids control system for SBF/OBF drilling consists of some combination of the following equipment, depending on the nature of the drilling program: primary and secondary shale shakers that separate drill cuttings from drilling fluid; a “drying” shale shaker or centrifuge to further recover drilling fluid from the cuttings waste stream; a “high-G” shale shaker or centrifuge to remove fine solids from the drilling fluid stream; and sand traps.

Drilling fluid returning from the well is laden with drill cuttings. The drill cuttings range in size from large particles that are on the order of a centimeter or more in size to small particles (i.e., fines or “low gravity solids”) that are fractions of a millimeter in size. Standard or current practice solids control systems employ primary and secondary shale shakers in series with a “fines removal unit” (e.g., decanting centrifuge or mud cleaner). The drilling fluid and drill cuttings from the well are first passed through primary shale shakers. These shakers remove the largest cuttings which are approximately 1 to 5 millimeters in size. The drilling fluid recovered from the primary shakers is then passed over secondary shale shakers to remove smaller drill cuttings. Finally, a portion or all of the drilling fluid recovered from the primary and secondary shakers may be passed through the fines removal unit to remove fines from the drilling fluid. It is important to remove fines from the drilling fluid in order to maintain the desired rheological properties of the active drilling fluid system (e.g., viscosity, density). Thus, the cuttings waste stream normally consists of discharged cuttings from the primary and secondary shale shakers and fines from the fines removal unit.

Operators using improved solids control technology insert an additional treatment unit in the above-described treatment train. An improved solids control system processes the cuttings discarded from the primary and secondary shale shakers through a “cuttings dryer” (e.g., vertical or horizontal centrifuge, squeeze press mud recovery unit, High-G linear shaker). The cuttings from the cuttings dryer are discharged and the recovered SBF is sent to the fines removal unit. The advantage of the cuttings dryer is that more SBF is recovered for re-use and less SBF is discharged into the ocean. This, consequently, will reduce the pollutant loadings and the potential of the waste to cause anoxia (lack of oxygen) in the receiving sediment. Figure VII-7 illustrates the arrangement of primary, secondary, and drying shale shakers in a generalized solids control system. The following sections describe these unit processes as they are currently utilized in SBF/OBF drilling. Performance results related to retention on cuttings of SBFs are summarized in Section 4.2.3 of this chapter. Individual well data used in the evaluation of the performance of the technologies are contained in Table 2 of the Statistical Support Document.[23]

Table VII-17 presents a comparative overview of the various baseline and improved solids control drilling fluid recovery devices currently available. EPA reviewed current literature from eight equipment

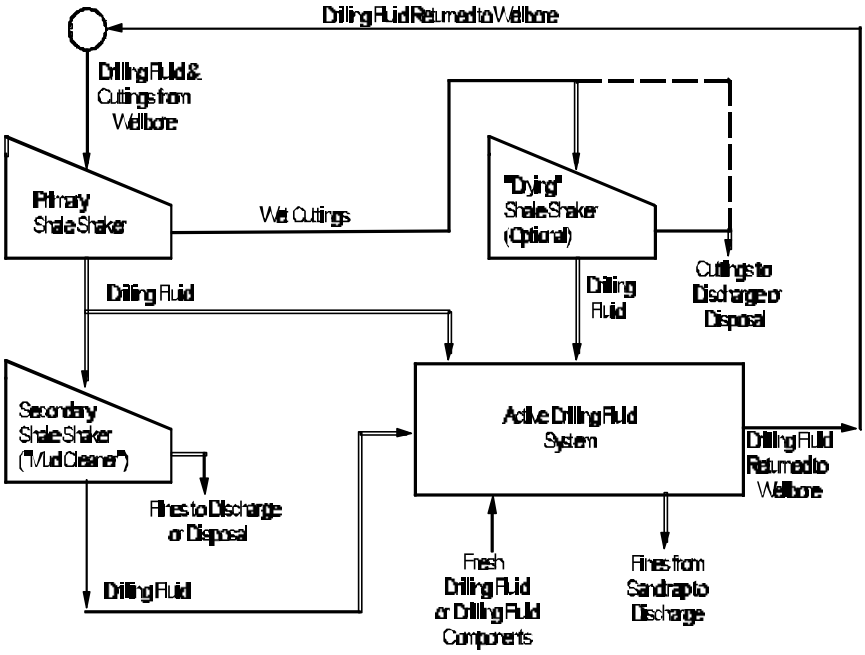

FIGURE VII-7
GENERALIZED SOLIDS CONTROL SYSTEM

manufacturers or distributors. Table VII-17 lists selected design and operating characteristics of shale shakers and centrifuges commercially available to U.S. drilling operators.

5.3.1 *Shale Shakers*

Shale shakers, also called vibrating screens, usually occupy the primary and secondary positions in the solids control equipment train. The function of the primary shale shaker (often referred to as the "scalp" shaker) is to remove the largest drill cuttings from the active drilling fluid system and to protect downstream equipment from unnecessary wear and damage from abrasion. The primary shale shaker receives cuttings and drilling fluid returned from the well and separates them into a coarse cuttings waste

stream and a drilling fluid stream. The secondary shale shaker, sometimes referred to as a “mud cleaner,” receives the drilling fluid stream from the primary shaker and removes smaller cuttings and fine particles. The drill cuttings that leave the primary shale shaker may be additionally treated by a third type of shale shaker, referred to as a “drying” shaker or “cuttings dryer” to indicate that it treats cuttings as opposed to the secondary shale shaker that treats drilling fluid. The drying shaker or cuttings dryer is used to remove

TABLE VII-17
DRILLING FLUID RECOVERY DEVICES [a]

Manufacturer/ Distributor	Device Name	Device Type(s)	Device Category	Performance (Wt % SBF Retention Reported by Co.) [EPA Technology Avg.]	Capacity	Size (LxWxH, inches) Weight (lbs)	Max. G-Force Applied to Cuttings	Power	Cost Information (1998$ unless otherwise noted)
Brandt	ATL-Dryer SDW-25	Linear motion shale shakers Mud cleaner Decanting centrifuge	SS FRU FRU	(Stationary Rigs: 8-10%) (Floating Rigs: 12%) [11.9%] [9.97%]	ATL: 8 SDW: 7 ton/hr 2-8 ton/hr 4-8 ton/hr	ATL: 100x71x57 SDW: 134x78x109 ~118x70x83 ~115x58x48	ATL: 4.2 SDW: 7	NA	Day Rate: $200-$250/day Capital Cost: $30K-$40K O&M: $50/day
Derrick Equipment	HI-G Dryer	Linear motion shale shaker Mud cleaner	Dryer FRU	(<10%) [11.9%]	Up to 1,200 gal/min 2-8 ton/hr	142x71x74 ~118x70x83	8.0	NA	Day Rate: $225/day Capital Cost: $47.5K O&M: $600/week
Swaco	ATL-II	Linear motion shale shaker Mud cleaner	SS FRU	(6-8%) [11.9%]	500 gal/min 2-8 ton/hr	129x63x61 ~118x70x83	6.25	NA	Day Rate: $190/day
Broadbent	NA[b]	Decanting centrifuges	NA	(<10%) [9.97%]	5.5-27.5 tons/hr	NA	NA	NA	£2MM in 1989 (~$3.8MM)
Mud Recovery Systems, Ltd. (MRS); JB Equipment, Inc.	MUD 6 MUD 10	Vibrating centrifuge	Dryer Dryer	(<7%) [3.85]	11 tons/hr 88 tons/hr	59x54x52 89x74x67	130	45 amp; 440 v; 60 Hz 85 amp; 440 v; 60 Hz	Day Rate for Amoco Demo of Mud-10: $1200 (incl. one FTE[c])
Centrifugal Services, Inc. (CSI)	Verti-G30 Verti-G60	Vertical axis centrifuge	Dryer	(2.5-3%) [3.72]	30 tons/hr 60 tons/hr	87x87x120 87x87x128	800	480v/3 phase, 60 Hz (150 amp breaker) 75+1/4 hp motors	NA
Apollo Services, Inc.	Squeeze Press	Press	Dryer	[6.71]	9": NA 12": NA	64x9x16 64x12x16	NA	NA	NA

[a] Information presented in this table was either quoted or derived from information provided in company literature or telephone communications with company representatives.
[b] Not available. [c] Full-time equivalent.

additional drilling fluid from the waste cuttings before they are discharged, injected, or transported offsite for disposal.

Variables involved in shale shaker design include screen cloth characteristics, type of motion, position of screen, and arrangement of multiple screens. The Development Document for the coastal oil and gas rulemaking provides a general discussion of how these variables are reflected in shale shaker design.[16] The application of these variables distinguishes the three types of shale shakers used with SBF/OBF drilling fluid systems. In general, the factor that distinguishes primary and secondary solids separation equipment design is the size of the solids removed by each unit. The primary shale shaker has screens with the lowest mesh (i.e., the least number of openings per linear inch, giving the largest screen hole size) to separate the largest cuttings. Secondary and drying shale shakers have finer mesh screens to remove smaller cuttings and fine particles.

In addition to mesh size, screen shape and orientation vary according to the level of separation required. Both the shape and orientation of the screen affect the retention time, or the time the process stream is exposed to the separation unit. A longer retention time on a shale shaker allows for potentially greater separation of solids from drilling fluid, but also increases the mechanical degradation of the solids. Flat screens provide the least surface area and retention time, compared to other designs. Flat screens were the first design used in drilling operations and continue to be used on primary shale shakers to minimize the amount of time the largest cuttings are exposed to mechanical degradation. More recent designs feature corrugated screens that, compared to flat screens, have greater surface area, longer retention times, and greater capacity.[9] Corrugated screens are sometimes used on secondary and drying shale shakers. Screen orientation also varies as needed, with a “downward” slope for faster conveyance and less retention time, and an “upward” slope for slower conveyance and more retention time.

EPA observed the operation of primary and secondary shale shakers, with both flat and corrugated screen designs, at an offshore Gulf of Mexico drilling operation that was using SBF at the time of the site visit.[17] The first, or primary units in the solids control train at this site were four two-tier shale shakers aligned in parallel. The two tiers of each unit worked in series, with gravity feed of the drilling fluid from the top tier to the bottom tier. The top tier of these shakers was equipped with screens consisting of four flat panels. As shown in Figure VII-8, the four top screen panels were tilted at increasing angles toward the discharge end. The cuttings discarded by the top screens were gravel-like bits and clumps of solid material on the order of a few millimeters in size, many of which retained the shape imparted by the drill bit. This shape was cited by the operator as indicative of cuttings generated from an interval of shale drilled with synthetic or diesel based drilling fluid.[17] The downward sloping flat screens also minimized the mechanical

degradation of the cuttings on the top tier. The bottom tier of these shakers was equipped with a corrugated screen that was slightly (less than 3 degrees) sloped upward toward the discharge end. The cuttings discarded by the lower screens consisted of smaller cuttings and finer mud-like solids.

Three shale shaker manufacturers claim their shale shakers can reduce the amount of SBF or OBF

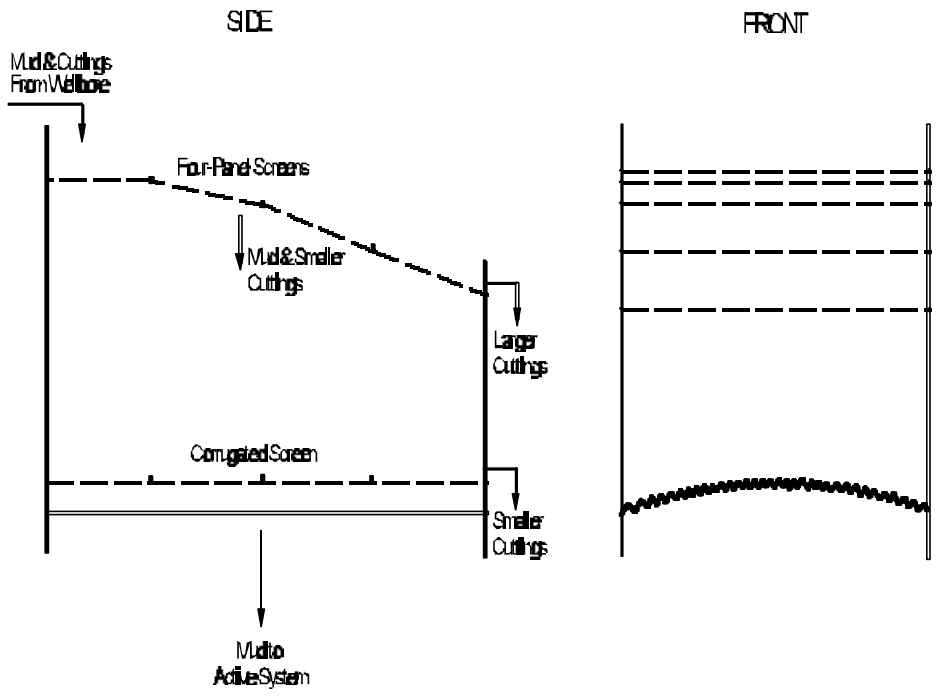

FIGURE VII-8
SCHEMATIC SIDE AND FRONT VIEWS OF TWO-TIERED SHALE SHAKERS

retained on the cuttings to less than 10% base fluid by weight. EPA's evaluation of data submitted for this rulemaking shows the long-term average of SBF retained on cuttings following processing by primary and secondary shale shakers is 9.32% and 13.8%, respectively (see Section 4.2.3 of this chapter and the Statistical Analysis Document[23]). As was expected because of the smaller particle sizes in the cuttings

waste stream, the retention value for the secondary shale shaker is considerably higher than the primary shaker. Cost information provided by these companies indicates that the day rate for shale shakers ranges from $190 to $250, for an average $213 per day, not including installation or labor.

5.3.2 *High-G Shale Shaker*

The impetus to maximize the amount of valuable OBF and SBF returned to the active drilling system encouraged the development of "high-G" shale shakers, so named for the higher-than-standard g-force they apply to the shaker screen. The applied g-force in this type of shaker can range from 6 to 8 Gs, as compared with approximately 2 to 4 Gs for standard shakers.[9, 37] High-g shakers are sometimes used to remove the finest particles from the drilling fluid in order to control viscosity. High-G shakers can also be used as drying shakers to retrieve drilling fluid from the cuttings waste stream. The greater impact force of high-G shakers has both positive and negative effects: it promotes greater separation of liquid from the solids, but also increases the mechanical degradation of the solids. The effects of mechanical degradation can be counteracted with finer mesh screens. Shale shaker manufacturers differ on the best approach to the operation of high-G shale shakers. One manufacturer notes its field tests have shown that 4 to 5 Gs is the optimum force for a drying shale shaker because greater g-forces move the cuttings too quickly over the screen and increase the drilling fluid retained on the cuttings.[9] Another manufacturer claims that high-g dryers (with g-forces of 8 Gs and greater) may be used as primary shale shakers, secondary shale shakers, or "high performance" mud cleaners.[37]

EPA observed a high-G shale shaker at an offshore Gulf of Mexico drilling operation that was using SBF at the time of the site visit.[17] (This was the same site discussed above that also was operating primary and secondary shale shakers.) The high-G shale shaker was equipped with an upward sloping corrugated screen, that received approximately one third of the drilling fluid stream from the primary shakers.[17] The function of this shale shaker was to remove fine particles from the synthetic drilling fluid to reduce its viscosity. The manufacturer's literature indicates that the maximum g-force attainable by this equipment is 8 G.[37] The solids that were discharged from the high-G shaker had a mud-like appearance similar to the solids discharged from the lower screens of the four parallel shakers, but with even finer particles.

Information provided by the manufacturer indicated that the unit should process cuttings to an SBF retention of <10%. EPA's evaluation of the data supplied by industry demonstrates a retention value of 9.4%, which is consistent with the design and specified performance of the unit.

5.3.3 *Centrifuges*

Centrifuges are used in solids control systems either in place of or in addition to shale shakers. When used as part of a standard solids control system, centrifuges can increase the solids removal efficiency by 30 to 40 percent.[43] Two centrifuge designs currently in use are decanting centrifuges and perforated rotor centrifuges. The Coastal Oil and Gas Development Document presents a detailed description of these centrifuge designs.[16]

In weighted SBF or OBF applications, centrifuges are used to remove fine solids from drilling fluid discharged by upstream separation equipment, such as a primary or secondary shale shaker. Some operators avoid this application, however, citing excessive loss of valuable SBF or OBF with the fine solids.[17] A more recent application for large capacity centrifuges is to recover SBF from the larger drill cuttings. These units are installed in place of the drying shale shaker. Such centrifuges must be large enough to process all the coarse and smaller cuttings discharged by the primary and secondary shale shakers.

Table VII-17 lists centrifuges manufactured by three companies for use as drilling fluid recovery devices. The first two (decanting) centrifuges listed are manufactured and marketed as a component in a typical (i.e., baseline) cuttings management treatment train. Such solids control system components were used to process all the cuttings returning from the well, using primary and secondary centrifuges as necessary in parallel. The remaining centrifuges listed in Table VII-17 represent a new generation of drilling fluid recovery devices.

The “Mud 10” combines design features from both centrifuge and shale shaker, with an internal rotating cone that also vibrates, thereby achieving the second lowest reported retention of drilling fluid on cuttings among the devices EPA reviewed. The Mud 10 was developed by a manufacturer serving North Sea operators, and has a record of demonstrated performance with wells drilled using SBF.[22] EPA observed a demonstration of the Mud 10 drilling fluid recovery device during the site visit to the offshore SBF drilling operation in the Gulf of Mexico.[17] Figure VII-9 illustrates the arrangement of the solids control equipment at this site. The cuttings discharged from the four two-tiered shale shakers dropped off the screens into a trough located on the floor at the foot of the shakers, in which an auger conveyor rotated. The cuttings were conveyed laterally to an opening in the center of the bottom of the trough, and fell from the opening through a 10-inch pipe to the inlet of the Mud 10 unit located on the deck immediately below the shale shakers and trough. On the drilling rig, the Mud 10 unit was mounted on a platform, adding two to three feet to its height.

EPA's evaluation of data submitted for the rulemaking shows the amount of SBF retained on cuttings following Mud 10 centrifuge technology is 3.85%. The cost of renting the Mud 10, including one man dedicated to its operation, was $1,200 per day.

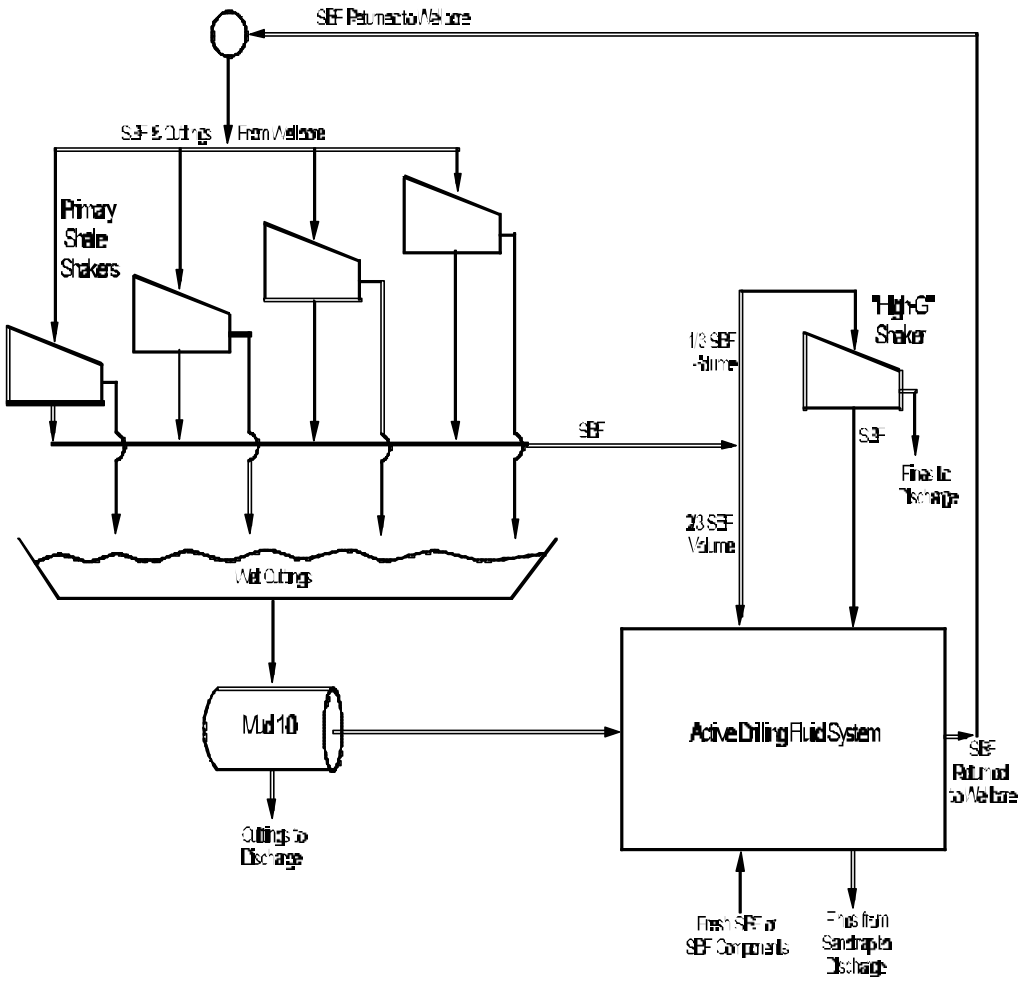

FIGURE VII-9
CONFIGURATION OF AMIRANTE SOLIDS CONTROL EQUIPMENT

Unlike the Mud 10 whose internal cone rotates around a horizontal axis, the "Centrifugal Dryer" features a vertically-oriented screen centrifuge that achieves highest reported g-forces, and the lowest reported retention values.[36] EPA's evaluation of data submitted by industry for this technology shows that the amount of retained SBF on cuttings following vertical centrifuge treatment was 3.72% (the best value reported by EPA).

5.3.4 *Squeeze Presses*

In addition to shale shakers and centrifuges, squeeze presses have been used to separate adhering drilling fluid from the bulk cuttings waste stream prior to discharge. Squeeze presses generally operate by squeezing the cuttings as they are extruded through the unit, producing a drilling fluid stream and a compressed mass of cuttings. The squeeze press creates brick-like solid chunks of cuttings waste with entrapped drilling fluid. Squeeze presses are not widely utilized by U.S. drilling operators for recovering drilling fluid from cuttings. EPA's evaluation of retention on cuttings data submitted by industry for squeeze press technology revealed a performance level of 6.71% retained SBF on cuttings, intermediate between horizontal and vertical centrifuges (3.71% - 3.85%) and primary shale shaker (9.32%)/decanting centrifuge (9.97%) technologies and, as expected, considerably better than secondary shale shaker (13.8%)/mud cleaner (11.9%) technology performance.

5.3.5 *Fines Control*

As discussed in the April 2000 NODA (65 FR 21569), solids control equipment generally breaks larger particles into smaller particles. An undesirable increase in drilling fluid weight and viscosity can occur when drill solids degrade into fines that cannot be removed by solids control equipment [i.e., generally classified as < 5 microns (10^{-6} meters) in length]. An unacceptable high fines content (i.e., generally > 5% of total drilling fluid weight) may consequently lead to drilling problems (e.g., undesirable rheological properties, stuck pipe). Therefore, it is possible that the increased recovery of SBF from cuttings for re-use in the active mud system, often achieved through use of the cuttings dryer in solids control systems, may lead to a build-up in fines for certain formation characteristics (e.g., high reactivity of formation cuttings, limited loss of drilling fluid into the formation). In order to meet EPA's promulgated numeric cuttings retention value where there are unfavorable formation characteristics, operators may be limited to: (1) diluting the fines in the active mud system through the addition of "fresh" SBF; and/or (2) capturing a portion of the fines in a container and sending the fines to shore for disposal.

EPA requested comments on the issue of fines management in the April 2000 NODA. Comments from API/NOIA identified only one instance in which the use of a cuttings dryer in combination with a fines removal unit in the United States may have lead to an increase in "fines build-up" and a loss of circulation event.[71] Further communication with industry identified that this well (Shell, Green Canyon 69, OCS-G-13159#3) was the first application of the cuttings dryer type (Mud-10 cuttings dryer) in the Gulf of Mexico and that fines were not an issue for the well in question.[76] Moreover, further industry comments revealed that the properties of formations are often the main culprit of loss circulation and that the same rig (Marianas) had a loss of circulation at another nearby well in the same formation (without a cuttings dryer)[76] Therefore, based on the record, which includes over three dozen successful cuttings dryer deployments, EPA concluded that extensive fines build up is not an issue related to the control technology when operators properly operate and maintain cuttings dryers and fines removal equipment.

5.3.6 *Rig Compatibility*

EPA requested comments on the issue of rig compatibility with cuttings dryer installation. EPA received information on the ability of operators to install cuttings dryers (e.g., vertical or horizontal centrifuges, squeeze press mud recovery units, High-G linear shakers) on existing Gulf of Mexico rigs.[77] There are 223 drilling rigs in the Gulf of Mexico and 173 are in operation. Of the 173 Gulf of Mexico in operation, 28% are not capable of having a cuttings dryer system installed due to either rig space and/or rig design without prohibitive costs or rig modifications.

EPA requested comments in the April 2000 NODA on the issue of rig compatibility with the installation of cuttings dryers (e.g., vertical or horizontal centrifuges, squeeze press mud recovery units, High-G linear shakers). EPA received general information on the problems and issues related to cuttings dryer installations from API/NOIA stating that not all rigs are capable of installing cuttings dryers.[71, 77] In late comments, some industry commentors asserted that 48 of the 223 Gulf of Mexico drilling rigs are not capable of having a cuttings dryer system installed due to either rig space and/or rig design without prohibitive costs or rig modifications.[35] Upon a further, more extensive review of Gulf of Mexico rigs, these same commentors asserted that 30 of 234 Gulf of Mexico drilling rigs are not capable of having a cuttings dryer system installed due to either rig space and/or rig design without prohibitive costs or rig modifications.[77] EPA also received late comments from one operator, Unocal, stating that 36 of 122 Unocal wells drilled between late 1997 and mid-2000 were drilled with rigs that do not have 40 foot x 40 foot space available which they assert is necessary for a cuttings dryer installation.[38] The API/NOIA rig survey and the Unocal rig survey identified most of the same rigs as unable to install cuttings dryers. However, two rigs (i.e., Parker 22, Nabors 802) identified in the Unocal rig survey as having no space for a cuttings dryer

installation were identified in the API/NOIA rig survey as having a previous cuttings dryer installation. Unocal requested in late comments that EPA subcategorize certain rigs from being subject to the retention limit or that these rigs be able to discharge SBFs using performance that reflects current shale shaker technology.[39]

Based on the record, EPA finds that current space limitations for cuttings dryers do not require a 40 foot x 40 foot space. Specifically, EPA has in the record information gathered during EPA's October 1999 site visit and information supplied by API/NOIA and equipment vendors. Also, EPA received information from a drilling fluid manufacturer and cuttings dryer equipment vendor, M-I Drilling Fluids, stating that they are not aware of any Gulf of Mexico rig not capable of installing a cuttings dryer.[86] API/NOIA estimated that 150 square feet are required for a cuttings dryer installation in order to meet the ROC BAT limitation and NSPS.[57] EPA also estimates that the minimum height clearance for a typical cuttings dryer installation is 6 feet. The API/NOIA estimate is based on the installation of a horizontal centrifuge cuttings dryer (i.e., MUD-6). The Unocal estimate is based on the vertical centrifuge cuttings dryer and is also characterized by other industry representatives as too high.[77] EPA's estimate of a typical vertical centrifuge installation is 15 feet x 15 feet with a minimum height clearance of 11 feet. EPA based the ROC BAT limitation and NSPS (e.g., 6.9%) on the use of both these cuttings dryers for SBFs with the stock limitations of C_{16}-C_{18} IOs. Based on comments from operators and equipment vendors, EPA believes that most of these shallow well rigs have the requisite 160-225 square feet available to install a cuttings dryer (see Table VII-17 for dimensions). Therefore, EPA finds that operators are not required to have a 1,600 square foot space for a cuttings dryer installation in order to meet the ROC BAT limitation and NSPS. Proper spacing and placement of cuttings dryers in the solids control equipment system should prevent installation problems.

Because of the large discrepancy between EPA's record information and the space requirements asserted by an industry commenter (1,600 square feet versus EPA's 225 square feet + 11 feet in height for the vertical centrifuge or 150 square feet + 6 feet in height for the horizontal centrifuge - MUD-6), EPA does not necessarily believe that there are as many wells that cannot install cuttings dryers as the commentor claims. Further, based on scant detail supporting these assertions, and their lateness in the process, EPA has no basis upon which to assess them or verify them.

Moreover, EPA does not believe that it has enough information to reasonably subcategorize these facilities, nor did it have time to provide public notice of how it would define such a subcategory, given the court-ordered deadline for this rule. EPA does not believe that basing a subcategory by specifying a space requirement alone (e.g. operators that do not have a certain amount of deck space available on, below or adjacent to the deck would not be subject to this requirement) would be sufficient to prevent operators from

configuring their other equipment in a manner that would enable them to fit into the subcategory. Such an exception might also lead to operators to make other assertions justifying that they should be included (e.g., that while they have a certain amount of space available, safety reasons prevent placement of the technology on the rig). Without a solution to these issues, EPA is concerned that such a subcategorization would potentially be too broad and be unworkable.

For these reasons, EPA believes that the appropriate way to handle these concerns is through the fundamentally different factors (FDF) variance process. This process, provided for under CWA section 301(n), would allow operators to submit supporting data and information to EPA and would give the public the opportunity to comment on that data to determine whether an FDF is truly warranted for that drilling facility. EPA has authority over owners and operators, who are both dischargers, but the NPDES regulations require the operator to apply for the NPDES permit: "When a facility or activity is owned by one person but is operated by another person, it is the operator's duty to obtain a permit," [see 40 CFR 122.21(b)]. Thus, mobile drill rig "operators" as dischargers can apply for FDFs [see 40 CFR 125.32; 122.21(b)] even when not currently drilling (or discharging).

5.3.7 *Small Volume Wastes*

EPA has also decided that solids accumulated at the end of the well ("accumulated solids") and wash water used to clean out accumulated solids or on the drill floor are associated with drill cuttings and are therefore not controlled by the zero discharge requirement for SBFs not associated with drill cuttings. EPA is controlling accumulated solids and wash water under the discharge requirements for cuttings associated with SBFs. The amount of SBF base fluid discharged with discharged accumulated solids will be estimated using procedures in Appendix 7 to Subpart A of 40 CFR 435 and incorporated into the base fluid retained on cuttings numeric limitation or standard. The source of the pollutants in the accumulated solids and associated wash water are drill cuttings and drilling fluid solids (e.g., barite). The drill cuttings and drilling fluid solids can be prevented from discharge with SBF-cuttings due to equipment design (e.g., sand traps, sumps) or improper maintenance of the equipment (e.g., failing to ensure the proper agitation of mud pits). Discharge of SBF associated with accumulated solids in the SBF active mud system and the associated wash water is normally a one-time operation performed at the completion of the SBF well (e.g., cleaning out mud pits and solids control equipment).

The quantity of SBF typically discharged with accumulated solids and wash water is relatively small. The SBF fraction in the 75 barrels of accumulated solids is approximately 25% and generally only very small quantities of SBF are contained in the 200 to 400 barrels of associated equipment wash water.

Current practice is to retain accumulated solids for zero discharge or recover free oil from accumulated solids prior to discharge. Since current practice is to recover free oil and discharge accumulated solids, the controlled discharge option for SBF-cuttings represents current practice and is economically achievable. Moreover, recovering free oil from accumulated solids prior to discharge has no unacceptable NWQIs. EPA defines accumulated solids and wash water as associated with drill cuttings. Therefore, operators will control these SBF-cuttings wastes using the SBF stock limitations and cuttings discharge limitations. As compliance with EPA's SBF stock limitations and cuttings discharge limitations does not require the processing of all SBF-cuttings wastes through the solids control technologies (e.g., shale shakers, cuttings dryers, fines removal units), operators may or may not elect to process accumulated solids or wash water through the solids control technologies.

5.4 Land-based Treatment and Disposal

Since the time of the 1993 Offshore Oil and Gas rulemaking, offshore drilling operators continue to utilize commercial land-based disposal facilities as the predominant means of meeting zero discharge requirements for OBF drilling waste. In Cook Inlet, operators primarily use injection for waste disposal. An informal survey of offshore operators showed that 11 of the14 Gulf of Mexico operators in the survey transport 50% to 100% of their OBF-cuttings to onshore disposal facilities.[44] The remainder of the OBF-cuttings are injected on site. For SBF-cuttings, the survey indicated that all of the 14 Gulf of Mexico operators use SBF, with one reporting onshore disposal of all its SBF-cuttings.

For the purpose of estimating costs and environmental impacts associated with transporting and land-disposing OBF- and SBF-cuttings, EPA reviewed the pertinent information and data compiled in the Offshore and Coastal Oil and Gas rulemaking efforts, and updated cost and operating information where available. The following sections present EPA's most recent findings regarding the transportation, land treatment and disposal, and land-based subsurface injection of OBF- and SBF-cuttings.

EPA received additional information regarding waste disposal practices in each of the three geographic areas (e.g., Gulf of Mexico, Offshore California, Cook Inlet, Alaska). As a result of this information, EPA revised the assumptions for the fraction of waste either injected at the drill site, injected on-shore or land disposed. Though the percentage of waste injected onsite versus hauled to shore (20%/80%) in the Gulf of Mexico remains unchanged, the method of onshore disposal has been revised for the final rule. In the Gulf of Mexico, 80% of the waste hauled to shore is injected onshore and only 20% is landfarmed.

EPA estimates that all SBF wastes from Californian deep water exploratory wells are sent onshore (i.e., 100% onshore disposal/0% onsite injection). For all other wells (i.e., shallow water development and exploratory and deep water development), EPA estimates that most of the offshore waste is disposed through offshore onsite cuttings injection (i.e., 20% onshore disposal/80% onsite injection) based on the fact that most of these wells are being drilled from fixed platforms. EPA estimates that most California offshore wastes sent onshore are disposed via onshore formation injection (i.e., 20% of offshore wastes sent onshore disposed via landfarming/80% of offshore wastes sent onshore disposed via onshore injection) based on the number of California land disposal operations identified in the most recent review of the Industry.

Based on the record for the 1996 Coastal rulemaking, EPA determined that onsite injection was not feasible throughout Cook Inlet, Alaska (see Coastal Development Document, EPA-821-R-96-023, Section 5.10.3). More recently, however, EPA identified in the April 2000 NODA that the SBF rulemaking record now demonstrates that many Cook Inlet operators in Coastal waters are using cuttings injection.[78, 79, 42] EPA contacted Cook Inlet operators (e.g., Phillips, Unocal, Marathon Oil) and the State regulatory agency, Alaska Oil and Gas Conservation Commission (AOGCC), for more information on the most recent injection practices of Cook Inlet operators. AOGCC regulations provide Cook Inlet operators the opportunity to permit and operate Class II disposal wells and annular disposal activities. Information provided to EPA indicate that Cook Inlet operators in Coastal waters are availing themselves of onsite cuttings injection and are receiving AOGCC permits for this activity. Generally, Cook Inlet operators in Coastal waters agree that onsite injection is available for most operations.

AOGCC also agreed that there should be enough formation injection disposal capacity for the small number of wells (< 5-10 well per year) being drilled in Cook Inlet Coastal waters. AOGCC stated, however, that case specific limitations should be considered when evaluating disposal options. For instance, Unocal has experienced difficulty establishing formation injection in several wells that were initially considered for annular disposal. In addition, Cook Inlet operators have the burden of proving to AOGCC's satisfaction that the waste will be confined to the formation disposal interval. Approval of annular disposal includes a review of cementing and leak-off test records. In some instances the operator may also have to run a cement bond log. When an older well is converted for use as a disposal well, some of this information may not exist. In cases where there is insufficient information, disposal is not allowed. Annular disposal is also limited to the platform on which the waste is generated. Although Class II disposal regulations don't restrict waste transport, it has generally been the practice of the various fields' owners not to accept any waste generated by other operators. In addition, AOGCC stated that a zero discharge requirement poses serious technical hurdles with respect to the handling of drilling waste for exploration drilling with mobile rigs. Normally, there is neither capacity for storage or room for processing equipment on exploratory drilling

rigs. Therefore, for the NWQI analysis, EPA estimates that all of the cuttings from the Coastal Cook Inlet operations (i.e., shallow water wells) are injected (i.e., 0% onshore disposal/100% on-site injection) based on the ability of industry to dispose of oil-based cuttings via onsite formation injection or annular disposal after gaining State regulatory approval.

In order to assess the SBF NWQIs relative to the total impacts from drilling operations, EPA included estimates of the daily drilling rig impacts to the NWQIs from SBF-related activities. The additional impacts consist of fuel use and air emissions resulting from the various drilling rig pumps and motors as well as impacts of a daily helicopter trip for transporting personnel and/or supplies. Impacts were assessed for the number of days that an SBF interval is drilled versus the number of days well intervals are drilled using WBFs and OBFs and for the number of wells drilled using each of the drilling fluids (see Chapter IV of this document).

5.4.1 *Transportation to Land-Based Facilities*

Drill cuttings earmarked for land disposal are first placed in cuttings boxes and transported from offshore platforms to coastal ports or transfer locations by ocean-going supply boat. Cuttings boxes in the Gulf of Mexico and California are reusable containers available in 15- and 25-barrel sizes, with footprints ranging from 20 to 40 square feet.[45, 46, 47] EPA used the 25-barrel box for its estimates in the Offshore Oil and Gas rulemaking, and updated the current per-box rental rate to $25 per day[44, 46] for the proposed SBF rulemaking. Cuttings boxes that may be used by operators in Cook Inlet, Alaska are single-use lined wooden crates measuring 4 feet x 4 feet x 4 feet, with an average eight-barrel capacity and a 1995 purchase price of $125 per box.[16]

Standard sizes for supply boats that service offshore platforms were reported to be 180 and 220 feet in length, with an estimated deck capacity of 80 or more 25-barrel cuttings boxes.[47, 48] Supply boat rental rates were recently quoted to range from $7,800 to $9,000 per day, with an industry-wide average of $8,500 per day.[47, 48]

Information supporting the Offshore Oil and Gas rulemaking stated that a regularly scheduled supply boat visits a drilling rig approximately every four days.[45] This source further estimated that regularly scheduled supply boats would pick up twelve 25-barrel cuttings boxes per trip because that number equals the average drilling rig capacity for storing cuttings boxes. The same source document provided additional supply boat information, including average speed (11.5 miles per hour), and the average distance between the port and drilling rig for Gulf of Mexico and offshore California (100 miles in both areas), with additional

distance estimates between the rig, coastal transfer stations, and port in the Gulf of Mexico (117 miles and 60 miles, respectively). One disposal company owns a number of coastal transfer stations in the Gulf of Mexico where cuttings are moved from operator supply boats to disposal company barges that take the cuttings to port.[44, 49, 50] Chapters VIII and IX present the source data and detailed methodology EPA used to apply these estimates in compliance cost and other pertinent analyses.

Gulf of Mexico and California drill cuttings are transferred to trucks at the port and hauled to the land disposal site. Truck capacities were obtained from both dated and new sources. Trucks serving the Gulf of Mexico have a capacity of 5,000 gallons (119 barrels), according to the same source document that provided supply boat information for the Offshore Oil and Gas rulemaking.[45] Truck information for offshore California was updated to a capacity of two 25-barrel cuttings boxes.[51] Estimated trucking distances also vary between geographic areas, as follows: 20 miles round trip between port and disposal facility in the Gulf of Mexico and 300 miles round trip between port and disposal facility in California (estimated mileage between Ventura and Bakersfield). Trucking costs were estimated for California, but not for the Gulf of Mexico where trucking is included in the cost imposed by the disposal facility (see section VII.5.4.2 below). The trucking rate for California was estimated to be $65 per hour.[53] Chapters VIII and IX present the application of these data in the compliance cost and other pertinent analyses.

5.4.2 *Land Treatment and Disposal*

Centralized commercial land treatment and disposal facilities are generally owned by independent companies. These facilities receive drilling wastes in vacuum trucks, dump trucks, cuttings boxes, or barges, from both onshore and offshore drilling operations. Most of these facilities employ a landfarming technique whereby the wastes are spread over small areas and are allowed to biodegrade until they become clay-like substances that can be stockpiled outside of the landfarming area. Another common practice at centralized commercial facilities is the processing of drilling waste into a reusable construction material. This process consists of dewatering the drilling waste and mixing the solids with binding and solidification agents. The oil and metals are stabilized within the solids matrix and cannot leach from the solids. The resulting solids are then used as daily cover at a Class I municipal landfill. Other potential uses for the stabilized material include use as a base for road construction and levee maintenance.[54] The Development Document for the Coastal Oil and Gas rulemaking presents a stepwise description of the treatment and disposal processes employed by a commercial facility located in southeast Louisiana.[16]

EPA determined that existing land disposal facilities in the areas accessible to the Gulf of Mexico offshore and coastal oil and gas subcategories have 5.5 million barrels annual capacity available for oil and

gas field wastes.[10] This is more than sufficient capacity to manage the nearly 225 thousand barrels per year of drilling waste that EPA estimates would go to land-based disposal facilities in the Gulf of Mexico region under the zero discharge option discussed in Chapters VIII and IX. Land disposal facilities accessible to California oil and gas operations in the offshore and coastal subcategories are estimated to have 19.4 million barrels annual capacity.[10] The zero discharge option presented in later chapters includes no additional drilling wastes, above that currently accounted for, going to land-based disposal facilities in California and Alaska.

EPA updated current disposal facility costs for the Gulf of Mexico and offshore California. In the Gulf of Mexico, current disposal prices range from $9.50 per barrel[55] to $10.75 per barrel[56] to dispose of OBF-cuttings. If the drilling operator offloads the waste at a coastal transfer station, the facility charges an additional $4.75 per barrel for the offloading and transportation of the waste to the facility.[55] For California, EPA calculated a baseline unit disposal cost of $12.53 per barrel plus a handling cost of $5.89 per barrel. Handling costs were not included in the disposal cost provided for California. As an estimate, EPA used Gulf of Mexico data and pro rata calculated California handling costs based on the percentage of Gulf of Mexico-per-barrel costs relative to per barrel disposal costs (47%). EPA's per barrel disposal cost for California was cost based on a price of $35 per ton for a disposal facility located near Bakersfield[51], and the calculated density of 716 lbs/bbl for cuttings with 10.2% by weight adhering SBF/OBF (see Table VII-4). A BAT/NSPS Option 2 per barrel disposal cost of $12.41, and a handling cost of $5.83 per barrel were derived using the same assumptions as for the baseline case except a density of 709 lb/bbl cuttings with a 10.7% SBF/OBF retention. Disposal costs for WBF in the Gulf of Mexico, because they are based on a per barrel basis, are the same as for SBF/OBF. In California, WBF disposal costs were estimated at $8.41 per barrel based on a wet cuttings density of 566 lbs/bbl (543 lbs/bbl cuttings plus 5%, or 2.1 gal/bbl, adherent WBF at 11 lbs/gal); the handling charge was estimated to be $3.95 per barrel.

5.4.3 *Land-Based Subsurface Injection*

In addition to land treatment and disposal, land-based disposal facilities use subsurface injection as a means of disposing drilling wastes, including both drilling fluids and drill cuttings. One of the two major commercial oilfield waste disposal companies serving the Gulf of Mexico industry currently operates three injection disposal sites in Texas: Port Arthur, Big Hill (30 miles from Port Arthur), and one in West Texas.[50] These three facilities collectively operate 15 injection wells with an estimated one billion barrel total capacity. This company specializes in the use of depleted salt domes, or limestones associated with other domes, which allow easy pumping into the dome for disposal. These sites were located by reviewing drilling records to see where extensive lost circulation problems occurred, indicating a void. The company states

that its use of existing underground domes is primarily responsible for the large quantities of oilfield wastes it has disposed. For example, 15 million barrels of petroleum wastes have been disposed in the Big Hill site since 1993. This company is working toward expanding its injection disposal sites into Louisiana and Mississippi.

The unit cost for commercial injection of OBF drilling waste at these Gulf of Mexico locations is comparable to that of land treatment: $9.50 per barrel for waste containing greater than 10% oil and grease.[50] An additional $3.50 per barrel covers ancillary waste handling and transport conducted by the disposal company.

5.5 Onsite Subsurface Injection

The interest in and use of onsite injection to dispose of drilling wastes at offshore platforms has increased since the Offshore Oil and Gas rulemaking in 1993, and has become more available since the 1996 coastal oil and gas rulemaking. At that time, subsurface injection was generally limited to disposal of produced water, with drilling waste injection still in the early stages of development.[10] Since then, interest in injection as an alternative to hauling drilling wastes to landfills has created a market supported by a growing number of commercial injection service companies. However, the extent to which offshore drilling operations currently use onsite injection is difficult to estimate from available information. An informal survey of fourteen Gulf of Mexico drilling operators and four commercial onsite injection companies provided varied responses regarding this issue.[44] Of the fourteen Gulf of Mexico operators, four reported using onsite injection to dispose of a portion of their OBF-cuttings. The proportion of OBF-cuttings disposed by injection as reported by the four operators ranged from 5% to 50%, the remainder of which was hauled to land-based disposal facilities. In addition, four commercial onsite injection companies reported a total of 66 injection jobs occurring at offshore Gulf of Mexico sites in the past year. When the survey author compared an estimated 100 offshore Gulf of Mexico wells drilled with OBF annually with the reported numbers of onsite injection jobs, the comparison suggested that nearly two-thirds of OBF wells are disposing of drill cuttings by onsite injection.[44] However, as noted by the survey author, the commercial injection companies also provided estimates of industry-wide use of injection for OBF-cuttings disposal ranging from 10% to 20%. Given these contrasting estimates, EPA estimates that 20% of the waste is injected offshore and 80% of the waste is land disposed in the Gulf of Mexico.

The survey of drilling operators also provided information about injection of OBF-cuttings in areas other than the Gulf of Mexico.[44] In California, two out of the five surveyed operators use OBF, and both haul OBF-cuttings to shore. One of these operators attempted injection unsuccessfully, indicating that there

is an interest in this technology among offshore California operators. In Cook Inlet, Alaska, all of the three operators contacted in the survey stated they inject 100% of their OBF-cuttings. Information concerning one commercial injection operation in Cook Inlet concerned the amount of cuttings injected through one well. Approximately 50,000 barrels of cuttings from four newly drilled wells were successfully injected through the annulus of a single well.[58] The North Slope area of Alaska was the first active drilling area to engage in large-scale grinding and injection programs,[10, 16] and continues to lead the industry in this regard. The survey contacted the only operator actively drilling in the offshore waters of northern Alaska, who reported a volume of 105,000 barrels of drilling waste injected annually.[44] This operator injects all of its waste WBF, WBF-cuttings and OBF-cuttings into a dedicated injection well.

Onsite injection differs from commercial land-based injection because its success depends on the availability of viable receiving formations and confining zones located at the drill site, whereas commercial facilities are located at large-capacity receiving formations. In onsite disposal projects, drilling wastes may be injected into either the annulus of the well being drilled or a dedicated disposal well. One source estimates that approximately half of the offshore injection jobs utilize annular injection down the well being drilled while the other half uses other wells on the same platform for disposal.[58] The critical parameters that affect the performance of any grinding and injection system are: drilled solids particle size, the injectable fluid density and viscosity, percent solids in the injectable fluid, injection pressure, and the characteristics of the receiving formation. These parameters and their effect on the design of the grinding and injection system are discussed in detail in the Development Document for the Coastal Oil and Gas rulemaking.[16]

EPA contacted two of the commercial injection companies that serve the offshore Gulf of Mexico drilling industry for current information regarding the equipment, processes, and prices for onsite injection of drilling wastes. Both companies use a licensed process originally developed by ARCO, that includes grinding, slurrification, and pumping the cuttings slurry downhole.[58, 59] As an example, one of the companies uses two basic equipment sets to grind and inject cuttings: the viscosifier system and the slurrification skid.[58] The viscosifier system picks up cuttings coming off the rig shale shaker using an auger or vacuum system, and puts them in a tank where the viscosity is adjusted to put the cuttings into suspension for pumping. For OBF, the cuttings are suspended in a polymer. Water, mineral oil, and other material can be used to adjust the viscosity. A grinding or “shredding” pump is used to reduce particle size to 100 microns. From the viscosifier, a centrifugal pump sends the slurry to the slurrification skid. There, a tank maintains the slurry and provides suction to a high pressure injection pump. This company reports that it usually achieves a disposal rate at Gulf of Mexico sites of 2 to 3 barrels per minute.[58]

Costs associated with onsite injection have been provided in two forms: as daily rental rates and as unit costs per barrel of cuttings disposed. The daily rates, generally representing the equipment and labor associated with the injection system, are similar between the three reporting companies, including quotes of $2,000 per day,[44] $2,500 per day,[58] and $2,500-$3,000 per day.[60] One of these companies provided costs for additional equipment, specifically $250 per day for an auger or $1,200-$1,300 per day for a vacuum system to transport the cuttings from the rig shale shaker to the injection system, plus additional labor at $28-$30 per hour to operate the vacuum system.[60] Quotes of unit costs per barrel of cuttings disposed vary widely between sources, from a low of $3 per barrel to a high of $20 per barrel.[44] The costs of onsite injection are dependent on many variables, including hole size (wherein a larger hole might require additional labor at the start),[58] the type of cuttings transfer equipment selected, and whether any downhole problems are encountered that might cause delays or changes to the disposal program. It is the issue of unforeseeable downhole problems that concerns drilling operators, who have noted that any savings realized through onsite injection are sensitive to the ability to inject.[61]

5.6 SBF Discharges Not Associated with Cuttings

In the February 1999 proposal, EPA proposed BPT, BCT, BAT, and NSPS as zero discharge for SBFs not associated with drill cuttings. In the April 2000 NODA, EPA published two options for the final rule for the BAT limitation and NSPS for controlling SBFs not associated with SBF drill cuttings: (1) zero discharge; or (2) allowing operators to choose either zero discharge or an alternative set of BMPs with an accompanying compliance method. Industry supported the second option stating that the first option (zero discharge) would result in the costly and potentially dangerous collection, shipping, and disposal of large quantities of rig site wash water containing only a small quantity of SBF.[57] Industry also stated that BMPs would be extremely effective at reducing the quantity of non-cuttings related SBF and would focus operators' attention on reducing these discharges.

EPA is promulgating BPT, BCT, BAT, and NSPS of zero discharge for SBFs not associated with drill cuttings. This waste stream consists of neat SBFs that are intended for use in the downhole drilling operations (e.g., drill bit lubrication and cooling, hole stability). This waste stream is transferred from supply boats to the drilling rig and can be released during these transfer operations. This waste stream is often spilled on the drill deck but contained through grated troughs, vacuums, or squeegee systems. This waste stream is also held in numerous tanks during all phases of the drilling operation (e.g., trip tanks, storage tanks). EPA received information that rare occurrences of improper SBF transfer procedures (e.g., no bunkering procedures in place for rig loading manifolds) and improper operation of active mud system equipment (e.g., no lock-out, tag-out procedures in place for mud pit dump valves) has the potential for the

discharge of tens to hundreds of barrels of neat SBF, or SBF not associated with cuttings, if containment is not practiced.[41]

Current practice for control of SBF not associated with drill cuttings is zero discharge (e.g., drill deck containment, bunkering procedures), primarily due to the value of SBFs recovered and reused. Therefore, zero discharge for SBF not associated with drill cuttings is technologically available and economically achievable. Moreover, these controls generally allow the re-use of SBF in the drilling operation and has no unacceptable NWQIs.

EPA has also decided that solids accumulated at the end of the well ("accumulated solids") and wash water used to clean out accumulated solids or on the drill floor are associated with drill cuttings and are therefore not controlled by the zero discharge requirement for SBFs not associated with drill cuttings (see Section 5.3.7 of this Chapter).

5.7 Additional Control Methodologies Considered

As part of the Offshore Oil and Gas rulemaking, EPA investigated four different thermal distillation and oxidation processes for the removal of oil from drilling wastes (53 FR 41375, October 21, 1998). The details of EPA's findings are presented in the Development Document for the Offshore Oil and Gas rulemaking.[10] Although these technologies appeared to be capable of reducing the oil content in oil-based drilling wastes, EPA rejected them from further consideration because of difficulties associated with the placement of such equipment at offshore drilling sites, operation of the equipment, intermediate handling of raw wastes to be processed, and handling of processed wastes and by-products streams.

EPA notes that interest in thermal distillation technologies persists among onshore commercial disposal companies as a means of treating drilling waste and recovering valuable SBF and OBF for reconditioning and reuse.[36, 40] EPA did not base BAT limitations or NSPS on this technology because its application is at land-based rather than offshore facilities and therefore would result in far greater non-water quality environmental impacts than the technologies EPA selected as a basis for BAT/NSPS.

6. REFERENCES

1. American Petroleum Institute, responses to EPA's "Technical Questions for Oil and Gas Exploration and Production Industry Representatives," attached to E-mail from M. Parker, Exxon Company, U.S.A., to J. Daly, EPA. 8/7/98.

2. Candler, J.E., S. Hoskin, M. Churan, C.W. Lai and M. Freeman. "Sea-floor Monitoring for Synthetic-Based Mud Discharged in the Western Gulf of Mexico," SPE 29694 Society of Petroleum Engineers Inc., March 1977.

3. Daan, R., K. Booij, M. Mulder, and E. Van Weerlee, "Environmental Effects of a Discharge of Cuttings Contaminated with Ester-Based Drilling Muds in the North Sea," *Environmental Toxicology and Chemistry*, Vol. 15, No. 10, pp. 1709-1722. 4/9/96.

4. Smith, J. and S.J. May, "Ula Wellsite 7/12-9 Environmental Survey 1991," a report to SINTEF SI from the Field Studies Council Research Centre, November 1991.

5. The Pechan-Avanti Group, Worksheet regarding "Calculation of Model SBF Drilling Fluid Formulation." 10/26/98.

6. Baker-Hughes Inteq, Product information sheet featuring "Typical Formulation, 14.0 lb/gal / 70/30 SWR," 1995.

7. Friedheim, J. E., and H.L. Conn, "Second Generation Synthetic Fluids in the North Sea: Are They Better?" IADC/SPE 35061, 1996.

8. Baker-Hughes Inteq, Product Bulletin for "ISO-TEQ™," 1994.

9. Brandt/EPI, "The Handbook on Solids Control and Waste Management," 4th edition, 1996.

10. EPA. 1993. Development Document for Effluent Limitations Guidelines and New Source Performance Standards for the Offshore Subcategory of the Oil and Gas Extraction Point Source Category, Final, EPA 821-R-93-003, January 1993. (Record I.A.a.1)

11. The Pechan-Avanti Group, Worksheet regarding "Calculation of Organics in Waste Cuttings Due to Crude Contamination." 1/20/99.

12. SAIC, Worksheet regarding "Calculations for Average Density of Dry Solids in Cook Inlet Drilling Mud." 6/6/94.

13. Baker-Hughes Inteq, Material Safety Data Sheet for "MIL-BAR" (Barite). 3/21/94.

14. Baker-Hughes Inteq, Case history information featuring synthetic-based drilling fluid properties, 1995.

15. Daly, J., EPA, Memorandum regarding "Contamination of Synthetic-Based Drilling Fluid (SBF) with Crude Oil." 1/14/99.

16. EPA. 1996. Development Document for Final Effluent Limitations Guidelines and Standards for the Coastal Subcategory of the Oil and Gas Extraction Point Source Category, EPA 821-R-96-023, October 1996. (Record No. I.A.a.2)

17. The Pechan-Avanti Group, "Demonstration of the 'Mud 10' Drilling Fluid Recovery Device at the Amoco Marlin Deepwater Drill Site." 8/7/98.

18. Annis, M.R., "Retention of Synthetic-Based Drilling Material on Cuttings Discharged to the Gulf Of Mexico," prepared for the American Petroleum Institute (API) *ad hoc* Retention on Cuttings Work Group under the API Production Effluent Guidelines Task Force. 8/29/97.

19. White, C.E., and H.D. Kahn, EPA, Statistics Analysis Section, Memorandum to J. Daly, EPA, Energy Branch, regarding "Current Performance, when using Synthetic-Based Drilling Fluids, for Primary Shakers, Secondary Shakers, and Vibrating Centrifuge and Model Limits for Percent Retention of Base Fluids on Cuttings for Secondary Shakers and Vibrating Centrifuge," 1/29/99.

20. McIntyre, J., Avanti Corporation, Memorandum to Joseph Daly, EPA, regarding "Summary of December 2 Meeting with D. Wood, Mud Recovery Systems." 12/15/97.

21. Annis, M.R., "Procedures for Sampling and Testing Cuttings Discharged While Drilling with Synthetic-Based Muds," prepared for the American Petroleum Institute (API) *ad hoc* Retention on Cuttings Work Group under the API Production Effluent Guidelines Task Force. 8/19/98.

22. Daly, J., EPA, Memorandum regarding "Data Showing the Performance of the Mud 10 with North Sea Oil Wells," 1/14/99.

23. EPA. 2000. Statistical Analyses Supporting Final Effluent Limitations Guidelines and Standards for Synthetic-Based Drilling Fluids and other Non-Aqueous Drilling Fluids in the Oil and Gas Extraction Point Source Category. EPA-821-B-00-015. (Record No. IV.C.a.3)

24. Daly, J., EPA, Memorandum regarding "Cost of Synthetic-Based Drilling Fluids (SBF)," 1/15/99.

25. Still, I. and J. Candler, "Benthic Toxicity Testing of Oil-Based and Synthetic-Based Drilling Fluids," Eighth International Symposium on Toxicity Assessment, Perth, Western Australia, May 25-30, 1997.

26. EPA, "EPA Method 1654A: Polynuclear Aromatic Hydrocarbon Content of Oil by High Performance Liquid Chromatography with an Ultraviolet Detector" in Methods for the Determination of Diesel, Mineral, and Crude Oils in Offshore Oil and Gas Industry Discharges, EPA-821-R-92-008, December 1992.

27. Daly, J., EPA, Memorandum regarding "Meeting with Oil and Gas Industry Representatives Regarding Synthetic Drilling Fluids," July 2, 1996, with two attachments: 1) Information package entitled "Enhanced Mineral Oils (EMO) for Drilling," presented by Exxon Co., U.S.A Marketing, D.F. Jacques, Ph. D., 6/25/96, and 2) Letter from M.E. Parker, P.E., Exxon Company U.S.A., to M.B. Rubin, EPA, 9/17/96.

28. Hood, C.A., Baker-Hughes Inteq, Letter to J. Daly, EPA, with unpublished sediment toxicity data from Baker-Hughes Inteq, 7/9/97.

29. Candler, J., R. Herbert and A.J.J. Leuterman, "Effectiveness of a 10-day ASTM Amphipod Sediment Test to Screen Drilling Mud Base Fluids for Benthic Toxicity," SPE 37890, Society of Petroleum Engineers Inc., March 1997.

30. American Petroleum Institute, Information package regarding "Data Tables for the Conference Call for Review of 2nd Round of Range-Finders," API Drilling Mud Issue Work Group *ad hoc* SBM Sediment Toxicity Protocol Development Work Group. 9/11/98.

31. American Petroleum Institute, Information package regarding "Conference Call for Review of 3rd Round of Range-Finders," API Drilling Mud Issue Work Group *ad hoc* SBM Sediment Toxicity Protocol Development Work Group. 12/11/98.

32. Vik, E.A., S. Dempsey and B. Nesgard, "Evaluation of Available Test Results from Environmental Studies of Synthetic Based Drilling Muds," OLF Project Acceptance Criteria for Drilling Fluids, Aquateam Report No. 96-010. 7/29/96.

33. Munro, P.D., C.F. Moffet, L. Couper, N.A. Brown, B. Croce, and R.M. Stagg, "Degradation of Synthetic Mud Base Fluids in a Solid-Phase Test System," the Scottish Office of Agriculture and Fisheries Department, Fisheries Research Services Report No. 1/97, January 1997.

34. EPA. 1999. Environmental Assessment of Proposed Effluent Limitations Guidelines and Standards for Synthetic-Based Drilling Fluids and Other Non-Aqueous Drilling Fluids in the Oil and Gas Extraction Point Source Category, EPA-821-B-98-019, February 1999.

35. Angelle, R. and P. Scott. 2000. Rig Survey Related to Installation Cost and Operational Costs of "Cuttings Dryers" to Reduce the Retention of Synthetic Based Mud on Cuttings Discharge. (Record No. IV.B.b.33)

36. McIntyre, J., Avanti Corporation, Telephone Communication Report on conversation with P. Matthews, Newpark Drilling Fluids, regarding "'Centrifugal Dryer' for Drill Cuttings," May 29, 1998.

37. Derrick Equipment Company, Product brochure entitled "Derrick HI-G™ Dryer with Optional Hydrocyclone Packages," October 1997.

38. O'Donnell, K., Unocal. 2000. Letter to M. Rubin, EPA transmitting additional information. 10/26/00. (Record No. IV.B.b.31)

39. Ressler, J., Unocal, Email to M. Rubin, EPA. 10/27/00. (Record No. IV.A.a.36)

40. McIntyre, J., Avanti Corporation, Telephone Communication Report on conversations with P. Hanson (on April 20, 1998), and George Murphy (on April 24, 1998) of SWACO, regarding "Questions regarding SWACO solids control equipment," with attached product brochures.

41. McIntyre, J., Avanti Corporation, Telephone Communication Report on conversation with Bryan Murry, Broadbent, Inc., regarding "Questions regarding Broadbent solids control equipment," with attached product brochure. 4/15/98.

42. Mud Recovery Systems, Ltd., Product brochure entitled "M.U.D. 10 and M.U.D. 6 Mud Recovery and Cuttings Cleaning System," undated.

43. Walters, H., "Dewatering of Drilling Fluids," in *Petroleum Engineer International*, February 1991.

44. Veil, J.A., Argonne National Laboratory, Washington, D.C., "Data Summary of Offshore Drilling Waste Disposal Practices," prepared for the U.S. Environmental Protection Agency, Engineering and Analysis Division, and the U.S. Department of Energy, Office of Fossil Energy, November 1998.

45. Carriere, J. and E. Lee, Walk, Haydel and Associates, Inc., "Water-Based Drilling Fluids and Cuttings Disposal Study Update," Offshore Effluent Guidelines Comments Research Fund Administered by Liskow and Lewis, January 1989.

46. Kennedy, K., The Pechan-Avanti Group, Telecommunications Report on conversation with personnel at Frances Torque Service, regarding "Cuttings box rental costs (Gulf of Mexico area)." 6/4/98.

47. Kennedy, K., The Pechan-Avanti Group, Telecommunications Report on conversation with J. Belsome, Seabulk Offshore Ltd., regarding "Offshore supply boat costs and specifications." 6/3/98.

48. Kennedy, K., The Pechan-Avanti Group, Telecommunications Report on conversation with George Bano, Sea Mar Management, regarding "Offshore supply boat costs and specifications." 6/3/98.

49. EPA, "Trip Report to Campbell Wells Land Treatment, Bourg, Louisiana, March 12, 1992." 5/29/92.

50. Kennedy, K., The Pechan-Avanti Group, Telecommunications Report on conversation with Frank Lyon, Newpark Environmental, regarding "Drilling Waste Zero Discharge Disposal Costs." 5//19/98.

51. McIntyre, J., The Pechan-Avanti Group, Telecommunications Report on conversation with Darron Stankey, McKittrick Solid Waste Disposal Facility, regarding "California Prices for Land Disposal of Drilling Wastes." 10/16/98.

52. Candler, J., M-I. Email to C. Johnston, EPA concerning ability of service companies to place cuttings dryers on rigs. 11/10/00. (Record No. IV.B.b.32)

53. Montgomery, R., The Pechan-Avanti Group, Telecommunication Report on conversation with Shane Morgan, Ecology Control Incorporated, regarding "costs associated with land and water transport of drill cuttings and drilling fluids for offshore oil platforms operating off the California coast." 5/9/98.

54. Weideman, A., EPA, "Trip Report to Alaska Cook Inlet and North Slope Oil and Gas Facilities, August 25-29, 1993." 8/31/94.

55. Newpark Environmental Services, Facsimile of Price List, Effective May 1, 1998, from L.L. Denman to K. Kennedy. 5/26/98.

56. U.S. Liquids of Louisiana, Facsimile of Price List, from "Betty" to J. McIntyre. 5/26/98.

57. Moran, R., National Ocean Industries Association, Re: National Ocean Industries Association, American Petroleum Institute, Offshore Operators Committee, and Petroleum Equipment Suppliers Association Comments on "Effluent Limitations Guidelines for Oil and Gas Extraction Point Source Category," Proposed Rule 65 FR 21548 (April 21, 2000). 6/20/00. (Record No. IV.A.a.13)

58. Kennedy, K., The Pechan-Avanti Group, Telecommunications Report on conversation with T. Franklin, Apollo Services, regarding "Apollo Services drilling waste zero discharge practices and cost." 5/19/98.

59. Kennedy, K., The Pechan-Avanti Group, Telecommunications Report on conversation with Nubon Guidry, National Injection Services, regarding "Zero discharge practices for OBM and SBM." 4/29/98.

60. Kennedy, K., The Pechan-Avanti Group, Telecommunications Report on conversation with Gene Kraemer, National Injection Services, regarding "Zero discharge costs and space requirements: Onsite injection." 5/19/98.

61. Daly, J., EPA, Memorandum regarding "October 13, 1998 Teleconference Regarding SBF Use," 10/20/98

62. Henry, L., Chevron. Memorandum to C.A. Johnston, EPA. Response to EPA Request for Additional Input Parameter for EPA Modeling. 9/11/00. (Record No. IV.B.a.9)

63. Avanti Corporation. 2000. Memorandum to B. Vanatta, ERG, Engineering Review of SBF Retention-on-Cuttings Data. 12/12/00. (Record No. IV.C.a.2)

64. Van Slyke, Don, Unocal. Unocal Comments; Effluent Limitations Guidelines for the Oil and Gas Extraction Point Source Category; Proposed Ruling (40 CFR 435). 6/9/00. (Record No. IV.A.a.3)

65. Xiao, L. and C. Piatti, Biodegradable Invert Oil Emulsion Drilling Fluids for Offshore Operations: A Comprehensive Laboratory Evaluation and Comparison, SPE 29941, 1995. (Record No. IV.A.a.13)

66. Young, S, Anchor Drilling Fluids, Life After Oil Based Muds? - The Technical and Environmental Benefits of "Pseudo-Oil Based Muds," 1994. (Record No. IV.A.a.13)

67. Patel, A.D., J.M. Wilson, B.W. Loughridge, Impact of Synthetic-Based Drilling Fluids on Oilwell Cementing Operations, SPE 50726, 1999. (Record No. IV.A.a.13)

68. Friedheim, J.E. and R.M. Pantermuehl, M-I Drilling Fluids, Superior Performance with Minimal Environmental Impact: A Novel Nonaqueous Drilling Fluid, SPE/IADC 25753, 1993. (Record No. IV.A.a.13)

69. Friedheim, J.E. and H.L. Conn, M-I Drilling Fluids, Second Generation Synthetic Fluids in the North Sea: Are They Better? SPE 35061, 1995. (Record No. IV.A.a.13)

70. Hall, John, Baroid Drilling Fluids, Re: Effluent Limitations Guidelines for the Oil and Gas Extraction Point Source Category; Proposed Rule 40 CFR Part 435 April 21, 2000. 6/19/00. (Record No. IV.A.a.7)

71. Avanti Corporation. 2000. WBF Failure Rate Ancillary Cost Analysis. 12/27/00. (Record No. IV.C.b.3)

72. Candler, J.E., S.P. Rabke, A.J.J. Leuterman, Predicting the Potential Impact of Synthetic-Based Muds with the Use of Biodegradation Studies, SPE 52742, 1999. (Record No. IV.A.a.13)

73. Steber, J., C.-P. Ilerold and J.M. Limia. 1995. Comparative Evaluation of Anaerobic Biodegradability of Hydrocarbons and Fatty Derivatives Currently Used as Drilling Fluids. Chemosphere, Vol. 31, No. 4, pp. 3105-3118. (Record No.I.D.b.26)

74. Neff, J.M., S. McKelvie and R.C. Ayers. 2000. A Literature Review of Environmental Impacts of Synthetic Based Drilling Fluids, Draft. Report to USDOI, MMS. 4/27/00. (Record No. IV.F.1)

75. Candler, J., M-I Drilling Fluids. Email to C.A. Johnston RE: unit costs for various muds. 10/23/00. (Record IV.B.a.13)

76. Meeting Summary Notes from July 20, 2000 SBF Stakeholders Meeting, Washington, DC. July 20,2000 meeting notes - (Record No. IV.A.b.1).

77. Angelle, R. and P. Scott. 2000. Rig Survey Update Focusing on the Number of Rigs/Platforms Where Cuttings Dryers Could Not be Installed. Prepared by the Technology Assessment Workgroup of Synthetic Based Mud Research Consortium (API and NOIA) in Conjunction with Cuttings Dryer Equipment Vendor Representatives. 11/9/00. (Record No. IV.B.b.34).

78. Carter, M.W., Phillips Petroleum. 2000. Responses to questions concerning SBF usage in Cook Inlet. (Record No. III.B.a.11)

79. Johnston, C.A., EPA. 2000. Memorandum to File regarding January 19, 2000 Telephone Conversation with Alaska Oil and Gas Conservation Commission (AOGCC), with attached AOGCC regulations. 1/20/00. (Record No. III.B.a.23)

80. Sullivan, F., Unocal. Email to C. Johnston, EPA, SBF Usage in CI - Reply. 1/28/00. (Record No. III.B.a.53)

81. (Docket No. W-98-26, Record No. IV.A.a.26, QTECH LTD Reports for Ocean America and Discoverer 534).

CHAPTER VIII

COMPLIANCE COST AND POLLUTANT REDUCTION DETERMINATION OF DRILLING FLUIDS AND DRILL CUTTINGS

1. INTRODUCTION

This chapter presents the cost, pollutant loadings, and effluent reductions (removals) analyses for the final rule. These analyses include the incremental costs or cost savings and incremental pollutant removals or increases that accrue from the technology-based options considered for the control of SBF drill cuttings. Incremental compliance costs or savings, beyond current industry practices and NPDES permit requirements, were developed for three control options for the Gulf of Mexico, offshore California, and coastal Cook Inlet, Alaska. Although there currently is no drilling activity in other parts of the United States (e.g., offshore Alaska, offshore East Coast), EPA believes that the costs/savings and effluent loadings/removals for any such projects would be comparable to those presented here.

2. OPTIONS CONSIDERED AND SUMMARY COSTS

Three main technology-based options were considered for control and treatment of SBF drill cuttings for this rule. These options are:

- BAT/NSPS Option 1 (Controlled Discharge Option): (1) Limitations on stock synthetic base fluid (PAH content, biodegradation rate, and sediment toxicity); (2) limitations on discharged SBF-cuttings (no free oil, formation oil contamination, sediment toxicity, aqueous toxicity, and retention of SBF on cuttings) based on discharges from cuttings dryer units and fines removal units; (3) limitations on Hg and Cd in stock barite; and (4) prohibition of diesel oil discharge.

- BAT/NSPS Option 2 (Controlled Discharge Option): Same as BAT/NSPS Option 1 except the retention of SBF on cuttings is based solely on the discharge from the cuttings dryer units, and does not include an allowance for the discharge of the fines removal units.

- BAT/NSPS Option 3 (Zero Discharge Option): Zero discharge of SBF-cuttings for all areas.

Table VIII-1 presents annual technology costs and pollutant loadings calculated for each option, for both existing and new sources. These technology (and monitoring) costs and pollutant loadings are estimated based on the installation, operation, and maintenance of control technology and monitoring along with the number of wells drilled annually. To determine the incremental compliance cost for each, both costs and savings and pollutant increases and removals are estimated by considering: (1) projected annual drilling activity in the three geographic regions; (2) model well volumes and waste characteristics; (3) technology and monitoring costs; and (4) reductions in drilling days and recovery of SBFs. The derivation of the costs/savings and pollutant increases/removals is described in the remainder of this chapter.

3. COMPLIANCE COST METHODOLOGY

The costs considered as part of the compliance cost analysis are those that will be affected by this rule. This includes costs associated with the technologies used to control and manage drill cuttings contaminated with SBF and OBF (hereafter referred to as SBF-cuttings and OBF-cuttings) under the two BAT controlled discharge options (BAT/NSPS Option 1 and 2) and the zero discharge option (BAT/NSPS Option 3), and various subsets of these options related to incentives for esters use. WBF wells that do not convert to SBF wells or from SBF wells do not incur compliance costs because they are subject to technology requirements EPA promulgated in 1993 (the Offshore Guidelines). As an ancillary analysis, however, EPA also evaluated the costs associated with WBF wells that convert to or from SBF wells and are projected to fail their toxicity or sheen limitation and be subject to a zero discharge restriction. The reason for this analysis was to provide an assessment of zero discharge costs that would be avoided (or more accurately, converted to SBF compliance costs) for WBF wells that would be projected to fail either of their sheen or toxicity limitations but that instead converted to SBF. The only readily available data for this analysis is the failure rate projections provided in the offshore development document (a weighted

TABLE VIII-1
ANNUAL TECHNOLOGY COSTS AND POLLUTANT LOADINGS
FOR DRILL CUTTINGS BAT AND NSPS OPTIONS

Option	Technology Cost (1999$/yr)	Total Effluent Loadings (lbs/yr)
BAT Options for Existing Sources		
BAT Option 1: Discharge with 4.03% retention of base drilling fluid on cuttings	$42,592,088	2,241,707,804
BAT Option 2: Discharge with 3.82% retention of base drilling fluid on cuttings	$42,772,221	2,234,130,139
BAT Option 3: Zero Discharge	$69,134,303	2,162,146,796
NSPS Options for New Sources		
NSPS Option 1: Discharge with 4.03% retention of base drilling fluid on cuttings	$2,013,387	107,704,029
NSPS Option 2: Discharge with 3.82% retention of base drilling fluid on cuttings	$2,017,491	107,185,411
NSPS Option 3: Zero Discharge	$2,749,981	100,387,607
Total Costs and Pollutant Removals (BAT + NSPS)		
BAT/NSPS Option 1: Discharge with 4.03% retention of base drilling fluid on cuttings	$44,605,476	2,349,411,833
BAT/NSPS Option 2: Discharge with 3.82% retention of base drilling fluid on cuttings	$44,789,712	2,341,315,550
BAT/NSPS Option 3: Zero Discharge	$71,884,284	2,262,534,403

average that calculated to 10.7%). EPA does not consider this information sufficiently reliable to include in its formal cost analysis. In as much as this consideration represents a potential cost savings to industry, EPA used a conservative approach to this issue and instead simply projected a 0% WBF failure rate (i.e., no net savings to industry from this factor) in its cost analysis.

The following sections describe the general assumptions and input data on which the cost analysis is based, followed by a detailed discussion of the methodology used to calculate the annual incremental compliance costs for both BAT and NSPS levels of regulatory control.

Chapter IV of this document has presented an accounting of wells drilled annually in each of the three geographic areas, distinguishing between wells drilled using WBF, OBF, and SBF (see Section IV.3.1 of this document). For the purposes of calculating compliance costs, pollutant removals, and non-water quality environmental impacts, a sub-population of wells considered to be affected by this rule was derived from the total numbers of wells drilled annually that are listed in Table IV-2. For proposal, only SBF wells or OBF wells (all of which EPA anticipated would convert to SBF) were included in the analysis. For proposal, wells using OBF and not converting to SBF were considered not to incur costs or realize savings in the analysis. EPA further assumed, at proposal, only those wells that were using SBF or OBF would potentially use SBF in the future, so all WBF wells were considered not to incur costs or realize savings in the analysis. Based on information in the record demonstrating that drilling with SBFs was far more efficient than drilling with WBFs, EPA examined whether certain options would create incentives for operators to switch from WBFs to SBFs or from SBFs to WBFs.

3.1 Drilling Activity Projections and Allocations for the Final Rule

For the final rule, all SBF, OBF and WBF wells are included in the well count. EPA was able to conduct a more detailed analysis because of increased detail in the well count data supplied by industry, specifically, including detail on projected conversions of WBF and OBF to and from SBF under various regulatory options. Another reason for including all wells in this well count is to maintain an overall accurate "balance sheet" of all wells estimated to convert into or out of various model well types.

The allocation of wells among the three well types is more complicated for the final rule than for the proposal because under BAT/NSPS Option 1 and BAT/NSPS Option 2, the conversion of WBF to SBF wells is not a 1:1 relationship due to an increased directional drilling ability and a more rapid drilling rate for SBF compared to WBF. Although 54 WBF wells are projected to convert to SBF, only 36 SBF wells are projected to result from this conversion (a reduction of 18 wells, or one-third of the WBF wells converting to SBF). Another complicating factor is that BAT/NSPS Option 3 is not simply a zero discharge analysis of baseline well counts because 207 of the 221 new and existing source SBF wells currently in existence will convert into 183 OBF and 24 WBF well categories. Thus, the analysis of costs and loadings for the final rule includes all three well types to accurately present comparative data for all of the options considered.

A detailed discussion of the methodology used to apportion the different well types and estimate the well counts for each type for this final rule is contained in Chapter IV of this document.

3.2 Model Well Characteristics

Sections 3 and 4 of Chapter VII of this Development Document present the pollutant characteristics and drilling waste volumes that EPA calculates on a per-well basis for four model wells. Table VII-1 presents SBF and OBF drilling waste characteristics. Table VII-2 presents the development of SBF and OBF discharge volumes for each of the four model wells. Table VII-3 presents the input data and equations used to generate per well volumes and loadings for SBF and OBF wastes. Table VII-4 lists the SBF and OBF drilling fluid and drill cuttings waste volumes, based on the data and methodology in Table VII-3, that are the basis for the compliance cost, pollutant loading, and non-water quality environmental impact analyses. Section 4 of Chapter VII of this Development Document also presents the data and methodology used to develop volume and loadings projections for WBF wells.

In addition to per-well waste volumes, for proposal EPA estimated the number of drilling days for each model well over the SBF interval, using the per-well retort data provided by API.[2, 3] These estimated durations represented the number of days of "active drilling" (i.e., the amount of time actually drilling) using SBF or OBF. The estimated number of active drilling days for the well sections drilled with SBF or OBF, at proposal, were: 3.6 days for the shallow water development (SWD) model well, 7.5 days for the shallow water exploratory (SWE) model well, 5.4 days for the deep water development (DWD) model well, and 12.0 days for the deep water exploratory (DWE) model well. Active drilling days, however, do not represent the entire time that the drilling rig and associated equipment are onsite. Active drilling days comprise approximately 40% of the total time to drill, during which equipment is onsite.[4] The total days to drill (i.e., 2.5 times the number of active drilling days) are the rental periods used in equipment rental cost estimates.

Active drilling days also were the basis for estimating waste hauling equipment requirements. Waste hauling requirements (i.e., container rental and supply boat costs) referred to as the number of days required to "fill and haul." This period is estimated at a duration between the active drilling days and the total time to drill because, although this period is required for a longer time than the number of active drilling days, this period is not required for the entire time of the drilling program. The number of days to "fill and haul" takes into consideration, for example, the transit time for container or supply boat rental going to or from shore.

For the final rule, these estimates are revised, based on data received from industry following the proposal. The revised number of SBF or OBF active drilling days for SWD, SWE, DWD, and DWE well types are, respectively, 5.2 days, 10.9 days, 7.9 days, and 17.5 days. (These estimates result in an

estimated number of SBF/OBF total days to drill, respectively, of 13.0 days, 27.3 days, 19.8 days, and 43.8 days.) The number of SBF/OBF days to fill and haul for SWD, SWE, DWD, and DWE wells, respectively, are 7.3 days, 14.2 days, 9.9 days, and 22.8 days. WBF drilling proceeds at a rate approximately half that observed for SBF/OBF wells, therefore, these estimated drilling-related durations are doubled for cost estimates related to WBF wells.

3.3 Onsite Solids Control Technology Costs

Costs associated with the onsite treatment of drill cuttings are estimated for the baseline and all BAT/NSPS compliance levels of control. The types of solids control equipment currently used in the offshore oil and gas industry are described in detail in Chapter VII. The following sections present the unit costs that constitute the line-items in the solids control technology costs.

3.3.1 *Baseline Solids Control Technology Costs*

For the purpose of calculating incremental compliance costs, EPA has identified a baseline level of solids control consisting of a primary shale shaker (or multiple primary shakers aligned in parallel), from which drill cuttings are either discharged without further treatment or collected for transport to shore, followed by a secondary shale shaker that receives drilling fluid from the primary shale shaker and discharges smaller particle sized drill solids than the primary shaker. The purpose of the primary shaker is to receive the drilling fluid and drill cuttings that return from down hole and to make the first separation of cuttings from the drilling fluid. The purpose of the secondary shaker is to remove the smaller solid particles from the drilling fluid that pass through the primary shaker, thereby controlling the buildup of fine solids in the drilling fluid. In some cases, a centrifuge is used in place of the secondary shale shaker, or as a tertiary treatment unit to return more SBF to the active drilling system. Data supplied by API support the determination that standard solids control systems for wells drilled with SBF most often consist of primary and secondary shale shakers.[3] As discussed in Chapter VII, EPA estimates that the OBF- or SBF-cuttings discharged by a standard solids control system have a long-term average of 10.2% base fluid retained on wet cuttings on a mass basis.

The line item in the baseline cost analysis for Gulf of Mexico wells for this final rule consists of the cost of SBF/OBF/WBF lost with the discharged cuttings. [Note: The cost of WBF lost on cuttings represents only this cost for WBF wells projected to fail their toxicity or sheen limitations.] The baseline unit cost of SBF lost, based on the discharge of cuttings following baseline treatment (shale shakers), is

estimated to be $221 per barrel (see below for derivation), based on current prices for IO and ester SBFs[30] (compared to the estimated cost of $200 per barrel, using internal olefin as the base fluid, that was used at proposal[6, 7]). The volume of SBF adhering to the discharged cuttings, included in Table VII-4 for each model well, is based on the weighted average 10.2% (g/g) retention value calculated for the baseline solids control system, and varies with the model well size. No other baseline costs (e.g., maintenance or labor costs) are attributed to the operation of solids control equipment that EPA considers to be standard in all drilling operations, since these costs are occurring regardless of the mud type used.

3.3.2 *BAT/NSPS Compliance Solids Control Technology Costs*

Both BAT/NSPS Option 1 and Option 2 levels of control are based on a solids control technology capable of reducing the retention of drilling fluid on cuttings consistently below that of standard primary and secondary shale shakers. The difference between Option 1 and Option 2 is not based on the use of differing treatment technologies, which are identical for both options. The distinction between these options is based on the inclusion (Option 1) or exclusion (Option 2) of the final fines removal units (FRUs) in developing the Agency's long-term average SBF retention limitation. The set of technologies that are together considered under the category of "cuttings dryers" includes vibrating centrifuges (horizontal or vertical) and for the esters limitations also include the squeeze press units and High-G linear shakers. The technologies receive drill cuttings from the primary shale shakers and remove additional drilling fluid from the cuttings before they are discharged.[8] These units are an add-on rather than a replacement technology.[37] As discussed in Chapter VII, retention on cuttings (ROC) data submitted to EPA for various solids control equipment yield the long-term averages: (1) primary shale shakers have a ROC long-term average of 9.32% (g/g); (2) secondary shale shakers have a ROC long-term average of 13.8% (g/g); (3) FRUs have a ROC long-term average of 10.7% (g/g); (4) combined data from horizontal centrifuge and vertical centrifuge cuttings dryers has a ROC long-term average of 3.82% (g/g); and (5) combined data from horizontal centrifuge, vertical centrifuge, squeeze press, and High-G linear shaker cuttings dryers has a ROC long-term average of 4.8% (g/g). The ROC limitation for SBFs with the environmental performance of internal olefins is based on combined data from horizontal centrifuge and vertical centrifuge cuttings dryers (long-term average of 3.82%) and the ROC limitation for SBFs with the environmental performance of esters is based on combined data from horizontal centrifuge, vertical centrifuge, squeeze press, and High-G linear shaker cuttings dryers (long-term average of 4.8%). When added to a baseline solids control system, cuttings dryers reduce the system-wide (i.e., cuttings dryer and FRU waste streams) long-term average retention of base fluid on discharged cuttings to 4.03% (g/g; based on combined data from horizontal centrifuge and vertical centrifuge cuttings dryers; see Section VII.4.2.2). Although cuttings dryers were not in wide-spread

use in the domestic U.S. offshore industry at the time of proposal, they were proven technologies with widespread use in the North Sea. The effectiveness of this technology in pollutant removals has been clearly demonstrated and their increased use in the Gulf of Mexico further demonstrates their effectiveness. This equipment has been directly observed by EPA in a demonstration of this technology at an offshore drilling operation in the Gulf of Mexico.[7] EPA is also aware of recent efforts on the part of several solids control companies that serve the Gulf of Mexico region to develop and market a cuttings dryer capable of treating cuttings to low retention values, comparable to the one used in the North Sea.[9]

Line-item BAT/NSPS costs in the controlled discharge option analysis consist of the following:

- Costs associated with the use of an add-on solids control device: The cost of the add-on technology is based on the daily rental cost for the cuttings dryer devices, and for the final rule is estimated to be $2,400 per day,[1] revised upwards from the $1,200 per day estimate used in the proposal.[7] The rental cost includes all equipment, labor and materials. The number of rental days is calculated based on the assumption that active drilling days are approximately 40% of the time the drilling equipment is onsite.[4]

- Platform retrofit costs/installation and downtime costs: Retrofit costs were assigned to all existing sources but not to new sources. For the final rule, EPA revised these costs from proposal in light of more recent information as the industry has gained more experience with these technologies as wells as a broader understanding of BAT technology installation costs, especially for deep water operators[1].[1] For the final rule, an installation cost of $32,500 (the midpoint of the range of installation costs) and a downtime cost of $24,000 (based on a downtime of 4 hours and rig time cost of $6,000 per hour). The revised installation cost estimate is a reasonable approach as this estimate relies on the midpoint of a range of actual cuttings dryer installation costs that cover a variety of different cuttings dryer installations from easy to difficult and more expensive. These costs are modified using geographic multipliers for California and Cook Inlet operations (respectfully 1.6x and 2.0x multipliers).[12] Geographic area cost multipliers, developed for the Offshore Oil and Gas Rulemaking effort to estimate regional compliance costs, are the ratio of equipment installation costs in a particular area compared to the costs for the same equipment installation in the Gulf of

[1] At proposal, the unit retrofit costs were based on an updated unit retrofit cost of $340/ft^2,[11] a unit footprint of 45.7 ft^2, a drilling fluid holding tank footprint of 20 ft^2, and a one-foot perimeter of free space around both footprints of 8 ft^2 (a total of 75 ft^2 of retrofit space required).[7, 8]

Mexico (whose multiplier, then is 1[12]). These multipliers primarily reflect shipping costs for materials manufactured in the Gulf of Mexico area.

At proposal these costs were applied to each SBF well drilled. For this final rule, however, the costs for installation and downtime were further revised to account for multiple wells drilled from the same structure. The number of exploratory wells and development wells per structure were developed based on the rig identifiers, well numbers, and dates of drilling provided in retention data files submitted by industry.[34] This analysis resulted in an estimated 1.6 exploratory wells per structure and 2.2 development wells per structure.

- Value of the SBF/OBF/WBF discharged with cuttings: The unit cost of SBF lost with discharged cuttings varies between the geographic areas. In the Gulf of Mexico, the cost at proposal was $200 per barrel (bbl).[6, 7] The unit cost in California was estimated to be $320/bbl, calculated by multiplying the Gulf of Mexico unit cost by the geographic area cost multiplier for California. The unit SBF cost in Cook Inlet was estimated to be $400/bbl, based on a multiplier of 2.

For the final rule, cost estimates for SBF, OBF, and WBF are developed from recent information provided by industry.[30] WBF is quoted at $45/bbl. OBF is quoted at $90/bbl for mineral oil and $70/bbl for diesel. SBF costs quoted are $160/bbl, $250/bbl, and $300/bbl for IO, vegetable ester, and low viscosity vegetable ester, respectively.

No reliable frequency of usage was available so usage is assumed simply to be inversely related to price. Thus, a weighted average price, with the weight inversely proportional to cost, is used. The weighted average cost per barrel is calculated as

$$\overline{X} = i\left[\left(\frac{1}{x_1} + \frac{1}{x_2} + \ldots \frac{1}{x_i}\right)^{-1}\right]$$

where x_i is the cost per barrel of a given mud. Based on this analysis, the costs used for the final rule were: $45/bbl (WBF), $221/bbl (SBF), and $79/bbl (OBF).

The unit costs of these muds are applied to the volume of SBF, OBF, or WBF lost. For SBF and OBF, this volume reflects mud that adheres to cuttings and is discharged (SBF) or disposed (OBF); the remainder of SBF and OBF are recovered, recycled, and reused. For WBF, this volume is the WBF adhering to discharged cuttings, plus bulk WBF discharged during drilling operations. The

volume of SBF and OBF adhering to the cuttings, included in Table VII-4, is based on the weighted average retention value calculated for the add-on solids control systems, and varies with the model well size. The volume of OBF adhering to cuttings with baseline control is estimated at 5%, based on information from the Offshore Development Document.

- Cost of performing the waste monitoring analyses: Analytical monitoring costs are included for the proposed test for formation oil contamination of drill cuttings and retort analysis for SBF retention on cuttings. The formation contamination test, estimated to cost $50 per test,[13] would be administered once per well. The retort analysis for SBF retention, estimated to cost $50 per test, would be required for each of the two streams of discharged cuttings at a frequency of once per 500 feet of hole drilled.[14] Therefore, the per-well cost of retort monitoring tests varies with model well depth. A cost of $575 per sediment toxicity test, assuming one test per well, is included.

- Cost of compliance with stock base fluid limitations: EPA has not explicitly included the monitoring costs related to the stock limitations on synthetic base fluids (e.g., PAH content and sediment toxicity). These costs were excluded because such costs are highly related to the number of products brought to market, which are very difficult to predict, and because EPA considers these as routine costs of product development.

3.4 Transportation and Onshore Disposal Costs

Costs associated with the transportation and land-based disposal of drill cuttings are estimated for both baseline and BAT/NSPS compliance levels of control. Chapter VII describes the modes of transportation and land disposal technologies currently used by the offshore oil and gas industry. The following sections present the unit costs for the line-items in transport and land disposal costs.

3.4.1 *Baseline Transport and Disposal Costs*

Wells currently drilled with OBF must either transport OBF-cuttings to shore for disposal at land-based facilities or inject OBF-cuttings onsite. As discussed in section VIII.3.1, EPA's baseline scenario estimates that 69 Gulf of Mexico wells (67 existing sources and 2 new sources); 2 offshore California wells (existing sources); and 2 Cook Inlet wells (existing sources) are drilled annually using OBF (see Table VIII-4). The line-item costs in the baseline transport and disposal analysis include the following:

- Supply Boat Costs: For proposal, drill cuttings transported in supply boats were costed at a day rate of $8,500 per day in all three geographic areas.[15, 16] This cost estimate has not been revised for the final rule. The number of supply boat days required to transport cuttings to shore was estimated using a methodology developed in the Offshore Oil and Gas Rulemaking effort,[17] and varies with model well size and geographic area. Appendix VIII-1 shows the calculation of supply boat transport days for all three geographic areas. The number of supply boat days required has been revised, and is given by the number of "days to fill and haul," described above.

- Trucking Costs: For proposal, trucking costs were included as a separate line item for the offshore California and coastal Cook Inlet baselines; this cost was included as part of the disposal facility cost in the Gulf of Mexico. The California trucking distance was estimated as the distance between a port in the Oxnard/Ventura area and a disposal facility in the vicinity of Bakersfield.[17,18] The trucking rate for California was calculated to be $355 per truckload, based on a 300 mile round trip at 55 mph and $65 per hour.[19] Each truck can carry two 25-bbl cuttings boxes.[18] Thus, for example, a DWD model well would require an estimated 28 truckloads (1,387 bbl/50 bbl per truckload). For the final rule, this cost estimate for California operations was not revised. Appendix VIII-1 shows the calculation of truck trips for all three geographic areas.

  Due to the limited availability of land-based disposal facilities in the Cook Inlet area, at proposal costs were developed for trucking the cuttings to a facility in Oregon. This approach to zero-discharge cost estimating for Cook Inlet was adopted from the Coastal Oil and Gas Rulemaking effort.[20] The trucking rate for Cook Inlet was calculated to be $1,917 per truckload (updated from the 1995 cost of $1,800 per truckload used in the Coastal guidelines effort[20]) using an ENR CCI ratio of 1997$/1995$ (1.065). The $1,800 per truckload was based on a quote provided by a trucking company in Anchorage for hauling wastes from the Kenai, Alaska area to a disposal facility in Arlington, Oregon.[21] Each truck had a capacity of 22 tons[21] and could carry eight 8-bbl cuttings boxes. This approach has been eliminated for the final rule. Based on industry and State of Alaska information, EPA is projecting that Cook Inlet operators will grind and inject these wastes (the current practice).[31] The final rule requires zero discharge in coastal Cook Inlet. However, the final rule also provides that if an operator can demonstrate onsite injection is not a viable option, onsite controlled SBF-cuttings discharges are allowed at the same level of control for Offshore operators. The NPDES permit authority in cooperation with AOGCC will evaluate each application for a controlled SBF-cuttings discharge on a case-by-case basis (see Appendix 1 to Subpart D of 40 CFR

435). Thus, for the final rule, no trucking costs are included in the cost analysis for coastal Cook Inlet wells.

- Disposal and Handling Costs: In the Gulf of Mexico, at proposal an average unit disposal cost of $10.13/bbl was calculated from prices provided by two Gulf of Mexico area companies for disposal of OBF cuttings (i.e., $9.50/bbl[22] and 10.75/bbl[23]). This cost only includes activities at the disposal facility. An additional waste handling cost of $4.75/bbl was included for dock usage, waste offloading with cranes, and transportation of the wastes from the transfer station to the facility.[22] These cost estimates are not revised for the final rule.

  The unit disposal cost for offshore California, for the proposal, was calculated to be $12.32/bbl, based on a unit cost of $35/ton[18] and a density (based on specified model well characteristics) of 704 lbs/bbl cuttings. Because this disposal cost was comparable to the per-barrel disposal cost estimated for the Gulf of Mexico, a waste handling cost of $5.79/bbl was added to the unit disposal cost of $12.32/bbl based on the ratio of handling-to-disposal costs for the Gulf of Mexico (i.e., $4.75/$10.13, or 0.47). For the final rule, these costs are been revised to reflect a change in cuttings density (due to changed SBF base fluid retention) from 704 lbs/bbl to 716 lbs/bbl. The costs used in the analysis for the final rule are $12.53/bbl for disposal and $5.89/bbl for handling.

  The unit disposal cost for drilling wastes generated in coastal Cook Inlet and transported to Oregon, at proposal was calculated to be $533 per 8-bbl box, updated from the 1995 cost of $500 per cuttings box used in the Coastal guidelines effort[20] using the ENR CCI ratio of 1997$/1995$ (1.065). As was the case for trucking costs, disposal and handling costs are eliminated in the cost analysis for the final rule due to both current industry practice and the requirements of the final rule.

- Container Rental Costs: For proposal, in both the Gulf of Mexico and offshore California, 25-bbl reusable storage boxes were found customary for transporting waste cuttings.[15, 17, 24] In the Gulf of Mexico, 25-bbl cuttings boxes rented for an estimated $25/day.[24,25] The rental rate in California was estimated to be $40/day, calculated by multiplying the Gulf of Mexico rental rate by the geographic area cost multiplier (1.6x) for California.[12] For the final rule, these estimates are unchanged.

  In coastal Cook Inlet, at proposal EPA found that cuttings boxes, holding eight barrels of waste cuttings each, had to be purchased and could not be reused.[20] The purchase price was estimated at

$133/box, updated from the 1995 price of $125/box used in the Coastal guidelines effort[20] using the ENR CCI ratio of 1997$/1995$ (1.065). For the final rule, this cost element is eliminated from the cost analysis, for the same reasons as discussed for trucking, disposal, and handling costs.

For both the Gulf of Mexico and offshore California, the number of cuttings boxes needed per well varies with model well size. The number of cuttings box rental days is estimated to be equal to the supply boat transport days, i.e., the number of "days to fill and haul."

- Retention value and unit costs for SBF/OBF/WBF disposed with cuttings: In the baseline analysis at proposal, EPA assumed that SBF/OBF cuttings transported to shore for disposal would first be treated onsite by the baseline solids control technology to an estimated long-term average (LTA) 11% (g/g) retention of SBF/OBF on the disposed cuttings. The unit costs of OBF were estimated, at proposal, to be $75/bbl for OBF and $200/bbl for SBF in the Gulf of Mexico,[6] adjusted by geographic multipliers[12] for offshore California and coastal Cook Inlet. The volume of SBF/OBF adhering to the disposed cuttings, based on a percentage of the retained oil varied with the model well size as a function of cuttings volumes. For the final rule the volume of disposed muds is revised to reflect a different projected LTA retention value (10.2% vs. 11%) and revised costs for SBF ($221/bbl) and OBF ($79/bbl) as well as costs for disposed WBF ($45/bbl).

3.4.2 *BAT/NSPS Transport and Disposal Costs*

Based on information provided by the industry, at proposal EPA assumed that all Gulf of Mexico deep water wells would use SBF regardless of the level of regulatory control placed on the discharged cuttings, due to the potential for riser disconnect and the spill of drilling fluid.[26, 27] Therefore, in the zero discharge option, EPA assumed that deep water wells would incur the cost of lost SBF, rather than OBF, with the disposed cuttings. For the final rule, industry provided specific information on the number of SBF, OBF, and WBF wells projected under each of the regulatory options considered, eliminating the assumption regarding deep water wells used in the proposal.[10] Using these well counts, unit transport and disposal costs remained unchanged from proposal, and are applied to SBF and OBF wells.

3.5 Onsite Grinding and Injection Costs

Costs associated with onsite grinding and injection of drill cuttings are estimated for both baseline and BAT/NSPS compliance levels of control. At proposal, only Gulf of Mexico operators were projected to

employ onsite injection, although it was noted that it was an emerging technology in both offshore California and coastal Cook Inlet.[25] Based on information provided by industry sources, EPA estimated that 20% of zero discharge wells in the Gulf of Mexico used onsite injection,[25] while 80% hauled their wastes to shore. This split remains unrevised for the final rule. Since proposal, EPA has received additional information and is revising its zero discharge onsite:onshore allocations (see Chapter VII, Section 5.4) for offshore California and coastal Cook Inlet. For offshore California operations, 80% of DWD, SWD, and SWE wells are assumed to inject onsite; no DWE wells are projected to inject onsite. In addition, 100% of Cook Inlet, Alaska operations are projected to use onsite injection to dispose of their drilling wastes.

The line-item and unit costs associated with onsite injection, at proposal, were identical for the baseline and all BAT/NSPS compliance cost analyses. Line-item costs for the proposal included the day rate rental cost for a turnkey injection system and the value of lost drilling fluid, all in the Gulf of Mexico geographic area. At proposal, the injection system cost of $4,280 per day included all equipment, labor, and associated services.[29] At proposal, the rental days for injection equipment were calculated by the same method used for rental of cuttings dryers (see section VIII.3.3.2), based on the assumption that active drilling days comprise approximately 40% of the time the drilling equipment is onsite;[4] the number of rental days varies with model well size. At proposal, the unit cost of drilling fluid injected with the cuttings was $75/bbl[6] for wells using OBF and $200/bbl for wells using SBF.[6, 7] For the final rule, the day rate for the turnkey injection unit is not changed; nor was the method for estimating the number of rental days. However, for the final rule, the cost per barrel of SBF, OBF, and WBF have been revised (see Section 3.3.2 above).

4. DETAILED ANALYSES OF TECHNOLOGY AND INCREMENTAL COMPLIANCE COSTS

EPA has analyzed the technology costs and incremental costs (or savings) beyond current industry practices and requirements, as well as pollutant loadings and incremental loadings or removals. EPA has performed these analyses for the Gulf of Mexico, offshore California, and coastal Cook Inlet, Alaska, for baseline (current) costs and three control option costs. (Compliance costs were not developed for other offshore regions in Alaska where oil and gas production activity exists because discharges of drill cuttings is not expected to occur in these areas.) The three technology-based options considered are: (1) BAT/NSPS Option 1 (controlled discharge option with discharges from the cuttings dryer and fines removal unit); (2) BAT/NSPS Option 2 (controlled discharge option with discharges from the cuttings dryer but not the fines removal unit); and (3) BAT/NSPS Option 3 (Zero Discharge Option). Compliance costs/savings and

pollutant increases/removals are based on: (1) projected annual drilling activity in the three geographic regions; (2) model well volumes and waste characteristics; and (3) technology and monitoring costs; and (4) reductions in drilling days and recovery of SBFs.

The compliance cost analysis begins with the development of defined populations of wells on a regional and well-type basis, develops per-well estimates from an analysis of line-item costs, and then aggregates costs into total regional and well-type costs by applying per well costs to appropriate populations of wells. EPA estimates baseline costs for current industry waste management practices and for compliance with each regulatory option. EPA then calculates incremental compliance costs, which reflect the difference between compliance costs for a regulatory option and baseline costs and the net compliance costs or savings which incorporate the costs along with savings realized by recovering drilling fluids and more efficient drilling. Tables VIII-2 and VIII-3, for existing and new sources respectively, list the total annual baseline costs, compliance costs, incremental compliance costs, cost savings, and net incremental compliance costs, calculated for each geographic area and regulatory option.

TABLE VIII-2
SUMMARY ANNUAL AND INCREMENTAL COSTS
FOR MANAGEMENT OF SBF-CUTTINGS FROM EXISTING SOURCES
(1999$/year)

Technology Basis	Gulf of Mexico	Offshore California	Cook Inlet, Alaska	Total
Total Operational Costs				
Baseline Costs: (Costs to Meet Current Requirements)	$39,472,159	$413,282	$516,602	$40,402,042
BAT/NSPS Option 1: Discharge with 4.03% retention of base fluid on cuttings	$41,562,237	$413,282	$616,570	$42,592,088
BAT/NSPS Option 2: Discharge with 3.82% retention of base fluid on cuttings; zero discharge fines	$41,742,369	$413,282	$616,570	$42,772,221
BAT/NSPS Option 3: Zero Discharge	$68,204,419	$413,282	$516,602	$69,134,303
Costs (Savings) Due to Retention Limit				
BAT/NSPS Option 1: Discharge with 4.03% retention of base fluid on cuttings	$2,090,078	$0	$99,968	$2,190,046
BAT/NSPS Option 2: Discharge with 3.82% retention of base fluid on cuttings	$2,270,210	$0	$99,968	$2,370,178
BAT/NSPS Option 3: Zero Discharge	$28,732,260	$0	$0	$28,732,260
Costs (Savings) Due to Efficiencies of SBF Drilling over WBF Drilling				
BAT/NSPS Option 1: Discharge with 4.03% retention of base fluid on cuttings	($48,832,540)	$0	$0	($48,832,540)
BAT/NSPS Option 2: Discharge with 3.82% retention of base fluid on cuttings	($48,832,540)	$0	$0	($48,832,540)
BAT/NSPS Option 3: Zero Discharge	$0	$0	$0	$0
Net Incremental Costs (Savings)				
BAT/NSPS Option 1: Discharge with 4.03% retention of base fluid on cuttings	($46,742,462)	$0	$99,968	($46,642,494)
BAT/NSPS Option 2: Discharge with 3.82% retention of base fluid on cuttings	($46,562,330)	$0	$99,968	($46,462,362)
BAT/NSPS Option 3: Zero Discharge	$28,732,260	$0	$0	$28,732,260

TABLE VIII-3
SUMMARY ANNUAL AND INCREMENTAL COSTS FOR MANAGEMENT OF SBF-CUTTINGS FROM NEW SOURCES
(1999$/year)

	Technology Basis	Costs (Savings)
Baseline Costs: (Costs to Meet Current Requirements)	Discharge with 10.2% retention of base fluid on cuttings	$2,373,970
Total NSPS Operational Costs	BAT/NSPS Option 1: Discharge with 4.03% retention of base fluid on cuttings	$2,013,387
	BAT/NSPS Option 2: Discharge with 3.82% retention of base fluid on cuttings; zero discharge fines	$2,017,491
	BAT/NSPS Option 3: Zero Discharge	$2,749,981
Costs (Savings) Due to Retention Limit	BAT/NSPS Option 1: Discharge with 4.03% retention of base fluid on cuttings	($360,583)
	BAT/NSPS Option 2: Discharge with 3.82% retention of base fluid on cuttings; zero discharge fines	($356,479)
	BAT/NSPS Option 3: Zero Discharge	$376,011
Costs (Savings) Due to Efficiencies of SBF Drilling over WBF Drilling	BAT/NSPS Option 1: Discharge with 4.03% retention of base fluid on cuttings	($2,123,505)
	BAT/NSPS Option 2: Discharge with 3.82% retention of base fluid on cuttings; zero discharge fines	($2,123,505)
	BAT/NSPS Option 3: Zero Discharge	$0
Net Incremental Costs (Savings)	BAT/NSPS Option 1: Discharge with 4.03% retention of base fluid on cuttings	($2,484,088)
	BAT/NSPS Option 2: Discharge with 3.82% retention of base fluid on cuttings; zero discharge fines	($2,479,984)
	BAT/NSPS Option 3: Zero Discharge	$376,011

The compliance cost analysis was a step-wise process that begins with the development of well counts that define the well-type populations (i.e., SBF, OBF, WBF) for each geographic region in the analysis. As discussed in section VIII.3.1 above, wells that incur costs or realize savings in the compliance cost analysis are a subset of the total population of wells that EPA identified as being drilled annually in the

three geographic areas. Table VIII-4 shows the numbers of wells, per model well type, that EPA identified as within the scope of the cost analysis, shown separately for existing and new sources.

The next step of the analysis is the calculation of per-well costs developed from the line-item costs detailed in section VIII.3.1 above. Referring to Table VIII-4, each component of the table represents a set of wells for which a distinct per-well cost is calculated, based on the line-items appropriate to each set. The per-well costs are then multiplied by the number of wells in each set, the results of which are then aggregated to calculate the industry-wide baseline, operational costs under each regulatory scenario, and incremental compliance costs. Appendix VIII-2 consists of the detailed worksheets that calculate the per-well costs, organized as follows:

Worksheets 1 through 3: SBF/OBF baseline costs for existing sources in the Gulf of Mexico, offshore California, and coastal Cook Inlet, respectively.

Worksheets 4 through 6: SBF/OBF BAT/NSPS Option 1 total discharge option costs for existing sources in the three geographic areas (in the same order as Worksheets 1-3).

Worksheets 7 through 9: SBF/OBF BAT/NSPS Option 2 total discharge option costs for existing sources in the three geographic areas (in the same order as Worksheets 1-3).

Worksheets 10 through 12: SBF/OBF total zero discharge option costs for transport and land-disposal, for onsite injection, and for weighted average zero discharge costs, respectively, for existing sources in the Gulf of Mexico.

Worksheets 13 through 15: SBF/OBF baseline, BAT/NSPS Option 1 and BAT/NSPS Option 2 total costs for new sources in the Gulf of Mexico.

Worksheets 16 through 18: SBF/OBF total zero discharge option costs for transport and land disposal, for onsite injection, and for weighted average costs, respectively, for new sources in the Gulf of Mexico.

Worksheet 19: SBF/OBF Zero discharge costs for small volume wastes.

TABLE VIII-4
ESTIMATED NUMBER OF WELLS DRILLED ANNUALLY[a]

Cost Analysis Framework		Shallow Water (<1,000 ft)		Deep Water (≥ 1,000 ft)		Total Wells
		Develop.	Explor.	Develop.	Explor.	
Gulf of Mexico: Existing Sources						
Baseline	SBF Wells	86	51	16	48	201
	OBF Wells[b]	42	25	0	0	67
	WBF Wells	511	298	12	36	857
BAT/NSPS Option 1/ BAT/NSPS Option 2	SBF Wells	124	74	17	49	264
	OBF Wells	25	15	0	0	40
	WBF Wells	479	279	11	34	803
BAT/NSPS Option 3 Zero Discharge	SBF Wells	0	0	3	8	11
	OBF Wells	128	76	8	25	237
	WBF Wells	511	298	17	51	877
Offshore California: Existing Sources [e]						
Baseline and All Options	SBF Wells	0	0	0	0	0
	OBF Wells[b]	1	1	0	0	2
	WBF Wells	3	2	0	0	5
Coastal Cook Inlet: Existing Sources [e]						
Baseline	SBF Wells	0	0	0	0	0
	OBF Wells[b]	1	1	0	0	2
	WBF Wells	3	1	0	0	4
BAT/NSPS Option 1/ BAT/NSPS Option 2	SBF Wells	1	0	0	0	1
	OBF Wells[b]	0	1	0	0	1
	WBF Wells	3	1	0	0	4
BAT/NSPS Option 3 Zero Discharge	SBF Wells	0	0	0	0	0
	OBF Wells[b]	1	1	0	0	2
	WBF Wells	3	1	0	0	4
Gulf of Mexico: New Sources [d]						
Baseline	SBF Wells	5	0	15	0	20
	OBF Wells[b]	2	0	0	0	2
	WBF Wells	27	0	11	0	38
BAT/NSPS Option 1/ BAT/NSPS Option 2	SBF Wells	8	0	16	0	24
	OBF Wells[b]	1	0	0	0	1
	WBF Wells	25	0	10	0	35
BAT/NSPS Option 3 Zero Discharge	SBF Wells	0	0	3	0	3
	OBF Wells[b]	7	0	8	0	15
	WBF Wells	27	0	15	0	42

[a] The numbers in this table are a subset of the estimated number of wells drilled annually, shown in Table IV-2.

[b] EPA estimates that 40% of wells currently drilled using OBF and 6% of wells currently using WBF in the Gulf of Mexico will convert to SBF use under the discharge option; 96% will convert to OBF or WBF under NSPS Option 3 (zero discharge). See Chapter IV, Section 3 of this document.

[c] Of the SW wells drilled in the Gulf of Mexico, EPA estimates that 5% are "new source" wells, and of the DW wells, 50% are "new source" wells. (See Development Document for proposed SBF rule.)

[d] EPA estimates that no "new source" wells will be drilled in offshore California and coastal Cook Inlet. (See Development Document for proposed SBF rule.)

Worksheets 20 through 22: WBF Zero discharge baseline costs for the Gulf of Mexico, offshore California, and Cook Inlet, Alaska, respectively, including costs for transport and land disposal and for onsite injection.

Worksheets 20A and 22A: WBF Zero discharge BAT/NSPS Option 1 and BAT/NSPS Option 2 costs for the Gulf of Mexico (costs for transport and land disposal and for onsite injection) and for Cook Inlet, Alaska (onsite injection), respectively.

Worksheet 23: WBF Cost Savings Analysis.

The following sections describe the development of the per-well costs and the calculations used for each regulatory option.

4.1 BAT Baseline Operational Costs

The cost analysis for the baseline consisted of all baseline wells listed in Table VIII-4, including WBF,[2] SBF, and OBF wells. Worksheets 1, 2, 3, 20, 21, and 22 in Appendix VIII-2 show the detailed calculations of per well costs for each of the mud types (i.e., SBF-, OBF-, and WBF-wells) and area-wide baseline costs for the Gulf of Mexico, offshore California, and coastal Cook Inlet, Alaska. As in all other per well calculations, per-well costs vary proportionately with the volume of waste generated per model well. For baseline SBF wells in the Gulf of Mexico (Worksheet No. 1), the line-item costs for discharge following solids control to a long-term average 10.2% (g/g) retention of synthetic base fluid (section VIII.3.3.1) is the basis of cost (this is for the cost of SBF adhering to discharge cuttings). The resulting per-well costs are: $77,792 for an SWD well; $117,572 for a DWD well; $162,877 for an SWE well; and $261,664 for a DWE well. There are no baseline SBF wells projected for either offshore California or coastal Cook Inlet, Alaska.

Costs for baseline OBF wells in the Gulf of Mexico also are calculated based on a 10.2% (g/g) retention estimate and two assumptions. The first, based on industry-provided well count projections, is that no OBF wells are drilled in deep water. The second is that 80% of shallow water OBF wells transport

[2] Note that the number of WBF wells provided in the well count enumeration contribute to effluent loadings. However, for the cost analysis, these wells do not contribute to compliance costs because this rule imposes no additional controls on WBF discharges.

cuttings to shore for disposal while 20% inject cuttings onsite.[25] For development and exploratory baseline, shallow-water OBF well types, per-well costs are calculated for both disposal alternatives, i.e., both transport and disposal and for onsite injection. Then, for each model well type, a weighted average, per well cost is also calculated as follows:

Baseline GOM/OBF well cost = (0.8 x per well transport & disposal cost) + (0.2 x per well onsite injection cost)

This same methodology is also used to obtain per well and weighted average per well costs of zero discharge for Gulf of Mexico SBF wells (BAT/NSPS Option 2 and BAT/NSPS Option 3) and OBF wells (BAT/NSPS Option 1, BAT/NSPS Option 2, and BAT/NSPS Option 3) presented below. The per well cost for a Gulf of Mexico SWD well is $110,715 for transport and disposal and $83,448 for onsite injection; for an SWE well, these respective costs are $236,406 and $174,853 per well. The weighted average per-well costs for baseline OBF wells in the Gulf of Mexico (Worksheet No. 1) are $107,536 for a SWD well and $219,201 for a SWE well. The total annual discharge option OBF baseline cost for the Gulf of Mexico is $10,034,296.

There are no deep water wells projected for either offshore California or coastal Cook Inlet, Alaska. EPA is revising its allocation between the two zero discharge alternatives (transport and land disposal; onsite grind and inject), in response to information received from industry, to an onsite:onshore allocation of 80:20 for shallow water wells in offshore California and 100:0 for shallow water wells in coastal Cook Inlet. In California, because only two baseline OBF wells are projected, both wells are costed on the basis of grind and inject technology. Offshore California baseline costs are $133,517 for an SWD well and $279,765 for an SWE well (Worksheet No. 2). For the same reason, both of the projected baseline wells in coastal Cook Inlet are costed on the basis of grind and inject technology. Baseline Cook Inlet costs are estimated at $166,896 for an SWD well and $349,706 for an SWE well (Worksheet No. 3).

The total annual baseline costs for lost SBF on cuttings from SBF wells in the Gulf of Mexico is $29,437,863; for OBF wells it is $10,034,296. Offshore California there are no baseline SBF wells projected; the total cost of waste disposal from OBF wells is $413,282 (Worksheet No. 2). In coastal Cook Inlet, Alaska there also are no SBF baseline wells projected; the cost of disposal for OBF wells is $516,602 (Worksheet No. 3).

The total baseline cost of SBF lost on cuttings is $29,437,863; the baseline (zero discharge) OBF cost is $10,964,179. The total baseline cost for the Gulf of Mexico is $39,472,159; for offshore California it is $413,282; for coastal Cook Inlet, Alaska it is $516,602 for a total, combined aggregate baseline cost of $40,402,042 (Table VIII-2).

4.2 BAT/NSPS Option 1 Discharge Option Costs

The BAT/NSPS Option 1 discharge option compliance cost analysis estimates the cost to discharge SBF-cuttings following secondary treatment by a solids control device that, when added on to other standard solids control equipment, reduces the long-term average retention from 10.2% to 4.03% base fluid on wet cuttings. Worksheets 4, 5, 6, 20A, and 22A in Appendix VIII-2 present the detailed calculations of per well costs for each of the mud types (i.e., SBF- and OBF-wells) and area-wide discharge option compliance costs for the Gulf of Mexico, offshore California, and coastal Cook Inlet.

In the Gulf of Mexico, the unadjusted per-well discharge costs for the four model wells drilled with SBF are $116,124 (SWD); $145,605 (DWD); $179,554 (SWE); and $252,225 (DWE). For the BAT/NSPS Option 1 and BAT/NSPS Option 2 discharge options cost analyses for the final rule, EPA is using an adjusted per well cost for SBF wells based on a multiple-well-per-structure factor applied to installation and downtime costs of additional treatment technologies (see following paragraph for a discussion of this approach). Multiple-well-per-structure, adjusted per well BAT/NSPS Option 1 compliance costs for SBF wells in the Gulf of Mexico are $85,306 per SWD well; $114,787 per DWD well; $158,367 per SWE well; and $231,038 per DWD well. These are the costs used to develop aggregate compliance costs (Worksheet No. 4). The total annual SBF discharge compliance cost for Gulf of Mexico, SBF existing wells is $35,569,256 (see Table VIII-2). This increased aggregate SBF compliance cost (approximately $6 million above the baseline cost) reflects the migration of OBF and WBF wells into the SBF well pool.

Under the BAT/NSPS Option 1 discharge option, EPA is using the concept of an adjusted cost-per-well, based on a multiple well-per-structure adjustment to installation and downtime costs. For the proposal, EPA included installation and downtime costs for every SBF well drilled. For this final rule, EPA considers this assumption to be questionable and to over-estimate compliance costs to the industry. From data submitted with ROC data provided by industry, EPA has examined the occurrences of multiple wells being drilled from the same structure. Based on this record information it is reasonable to estimate that some number of wells will be drilled from structures that have already incurred installation and downtime costs for

add-on cuttings dryer technologies that can be used for subsequent wells drilling by the same operator because the record indicates that this occurs. EPA's analysis of ROC data files suggests that on average 1.6 exploratory wells may be drilled per structure, while for development activities 2.2 wells per structure may be drilled.[34] For the final rule, EPA is adjusting the aggregate costs of installation and downtime by these multiple well per structure factors.

EPA has calculated the installation and downtime costs as for the proposal (i.e., for every SBF well drilled) but has divided these costs by using a factor of 1.6 (for exploratory wells) or 2.2 (for development wells) to proportion the cost over the number of wells drilled. These adjusted aggregate installation and downtime costs are allocated over all SBF wells drilled (of a given well type, i.e., deep, shallow, development, exploratory) to determine an adjusted cost-per-well. This same approach is used in the cost analysis for the BAT/NSPS Option 2 discharge option.

There are no projected existing source SBF wells in offshore California. The line-item BAT/NSPS Option 1 discharge compliance cost elements for coastal Cook Inlet[3] are the same as those estimated for the Gulf of Mexico, adjusted by a geographic area multiplier (see section VIII.3.3.2). The per-well discharge compliance cost for the single coastal Cook Inlet SBF well is $266,864 for a SWD well (Worksheet No. 6); the per well cost of the single OBF well is $349,706 (unchanged from the baseline). The total annual SBF BAT/NSPS Option 1 discharge option compliance cost for Cook Inlet is, therefore, $616,570; this reflects the conversion of one OBF well to SBF and thus reflects a net increase of the same amount above Cook Inlet baseline SBF costs.

Costs for OBF wells in the Gulf of Mexico show a decrease in the aggregate under the BAT/NSPS Option 1 discharge option compared to baseline. This reflects the conversion of OBF wells to SBF wells. The per well cost estimate stays the same as baseline costs under each option; it is the shifting between the

---

[3] Note that the Cook Inlet SBF well projected under BAT/NSPS Option 1 and BAT/NSPS Option 2 is projected to incur compliance costs based on zero discharge. The reason is that the costs of discharge are greater than those to grind and inject. Installation and downtime costs (approx. $208,000), cuttings dryer rental costs (approx. $62,000), and the cost of discharged SBF (approx. $53,000) total approximately $323,000, whereas injection is projected to cost $267,000. Whether this single SBF well will be drilled is highly questionable. The cost differential versus OBF resolves into the cost of the fluid. With OBF at about $160/bbl and SBF at about $442/bbl, the additional cost for SBF amounts to about $100,000 per well. Without a substantial cost savings to offset this added cost, there is little technical advantage of SBF over OBF. EPA believes it quite likely that there will be no discharge of SBF in Cook Inlet even under BAT/NSPS discharge options. Instead, EPA believes operators will very likely choose to manage SBF wastes as they now manage OBF wastes, and at no additional cost under the discharge options. However, the increased costs of drilling an SBF well have been included in this analysis as a conservative factor in the assessment of the cost of this regulation to the industry.

types of wells that causes the changes in total costs under each regulatory option. The total annual OBF (zero discharge) cost for Gulf of Mexico existing sources is $5,992,981 (Worksheet No. 4).

Costs for OBF wells offshore California, for the same reason, do not change from baseline costs. The aggregate offshore California, OBF cost is $413,282 (the same as baseline; Worksheet No. 5). In coastal Cook Inlet, Alaska there is a reduction in aggregate compliance costs for OBF wells that reflects the conversion of one (SWD) OBF well to SBF. The per-well cost for an SWE well, as well as total aggregate OBF cost, is $349,706, based on grind and inject technology.

Thus, for BAT/NSPS Option 1, the Gulf of Mexico costs, by well type, are $35,569,256 (SBF); and $5,992,961 (OBF) for a total Gulf of Mexico BAT cost of $41,562,237. The BAT/NSPS Option 1 cost for offshore California is $413,282 (OBF); there are no BAT/NSPS Option 1 SBF wells offshore California, thus the BAT/NSPS Option 1 total cost for offshore California is $413,282. Cook Inlet BAT/NSPS Option 1 costs are $266,864 (SBF); $349,706 (OBF); the BAT/NSPS Option 1 total cost for BAT/NSPS Option 1 for coastal Cook Inlet, Alaska is $616,570.

4.3 BAT/NSPS Option 2 Discharge Option Costs

Under the BAT/NSPS Option 2 discharge option, the discharge limitation is based on 3.82% retention of SBF on cuttings as the demonstrated, long-term average retention of cuttings dryer technologies. EPA recognizes operators may well be able to choose and operate cuttings dryer technologies whose performance exceeds that required by this limitation, and thus be able to include the fines removal unit (FRU) wastestream and still comply with the above requirement. However, for this cost analysis EPA has included costs of zero discharge of FRU wastes. No difference in the well counts of WBF, SBF, or OBF wells is projected between BAT/NSPS Option 1 and BAT/NSPS Option 2. Per-well and aggregate costs are only slightly increased as a result of the zero discharge costs for FRU wastes, which are relatively minimal because of the small waste volumes from FRUs.

The per well BAT/NSPS Option 2 costs for SBF wells in the Gulf of Mexico ranged from $82,346 in discharge-related (cuttings dryer) costs and $2,712 in zero discharge-related (FRU) costs for an SWD well to $223,116 in discharge-related costs and $10,541 in zero discharge-related costs for a DWE well (Worksheet No. 7). The per well and aggregate costs for Gulf of Mexico OBF and WBF wells are unchanged from BAT/NSPS Option 1 estimates.

As is the case for BAT/NSPS Option 1, there are no BAT/NSPS Option 2 SBF wells projected for offshore California, and the BAT/NSPS Option 2 compliance costs for OBF, and WBF wells offshore California identical to costs for BAT/NSPS Option 1 and the baseline.

In coastal Cook Inlet, SBF BAT/NSPS Option 2 costs are identical to BAT/NSPS Option 1 costs. An increase in the BAT/NSPS Option 2 costs due to additional FRU zero discharge disposal costs does not occur in Cook Inlet as it does in the Gulf of Mexico. The reason is the projected SBF well is expected to inject onsite, thus disposing of the FRU fines along with other cuttings dryer wastes (see footnote 3, page 23 for further explanation of costing onsite injection).

Thus, the BAT/NSPS Option 2 costs for Gulf of Mexico SBF and OBF wells are: $35,749,388 (SBF) and $5,992,981 (OBF) resulting in a total, aggregate Gulf of Mexico BAT/NSPS Option 2 cost of $41,742,369. For offshore California there is no BAT/NSPS Option 2 SBF cost; the OBF cost is $413,282. In coastal Cook Inlet, Alaska, the projected BAT/NSPS Option 2 cost is $266,864; the OBF BAT/NSPS Option 2 cost is $349,706; and the total, aggregate Cook Inlet BAT/NSPS Option 2 cost is $616,570.

The total BAT/NSPS Option 2 SBF cost is $35,749,388; and the total BAT/NSPS Option 2 OBF cost is $5,992,981. The combined, total cost for BAT/NSPS Option 2 is $41,742,369.

4.4 BAT/NSPS Option 3 Zero Discharge Option Costs

The zero discharge option cost analysis considers Gulf of Mexico wells identified as being drilled with SBF or OBF. (These same well types are also included in the offshore California and coastal Cook Inlet cost analyses.) Costs for the BAT/NSPS Option 3 zero discharge option are presented in detail in Worksheets 10, 11, 12, and 20 for the Gulf of Mexico; in Worksheets 2 and 21 for offshore California; in Worksheets 3 and 22 for coastal Cook Inlet, Alaska.

The costs for zero discharge in the Gulf of Mexico are based on costs of two alternatives - transport and land disposal (“onshore”) and grind and inject (“onsite”) - allocated per well on a 0:100 onsite:onshore basis for deep water wells and on a 20:80 onsite:onshore basis for shallow water wells. The zero discharge, per-well SBF cost for DWD wells is $236,963 for onshore disposal; for DWE wells the cost is $575,921 per well; there are no shallow water SBF wells projected under BAT/NSPS Option 3 in the Gulf of Mexico.

For OBF wells, the BAT/NSPS Option 3 per well DWD operational cost is $161,419 for onshore disposal; for DWE wells the onshore disposal cost is $407,793 per well. For SWD wells the costs are $110,715 for onshore disposal and $83,448 for onsite injection; for SWE wells these costs respectively, are $236,406 and $174,853 per well.

For WBF wells, costs for transport and land disposal in the Gulf of Mexico ranged from $627,810 for an SWD well to $2,724,495 for a DWE well; costs to grind and inject ranged from $387,454 for an SWD well to $1,235,566 for a DWE well.

The BAT/NSPS Option 3 aggregate cost for Gulf of Mexico SBF wells is $5,318,258. For OBF wells, it is $62,886,162, for a total combined BAT/NSPS Option 3 Gulf of Mexico cost of $68,204,419.

For offshore California, the estimated cost of the two SWD OBF wells projected to grind and inject OBF wastes show a total estimated cost of $413,282; one SWD at $133,517; and one SWE at $279,765.

In coastal Cook Inlet, Alaska projected OBF wells are also projected to use onsite grind and inject technology. BAT/NSPS Option 3 costs in coastal Cook Inlet are the same as for the baseline. The estimated cost for BAT/NSPS Option 3 OBF wells is $166,896 (SWD) and $349,706 (SWE) for an aggregate cost of $516,602.

The aggregate BAT/NSPS Option 3 costs for all geographic regions are: $5,318,258 for SBF wells and $63,816,045 for OBF wells. The total aggregate BAT technology cost is $69,134,303.

4.5 Retention on Cuttings Incremental Costs (Including Fluid Recovery/Re-use)

The incremental cost of the retention on cuttings limitations and standards is the difference between the baseline cost and the operational costs of each option projected under the control options, as presented in Table VIII-2. The major components of this incremental costs are: (1) the costs associated with the treatment/disposal technology (discussed above); (2) the value of the drilling fluid discharged or disposed with the cuttings along with the projected savings from the recovery and re-use of the drilling fluid; and (3) the improved efficiency of drilling (reduced drilling time and hole size). The analysis also incorporates effects of operators switching from WBF to SBF if discharge is authorized and switching from SBF to OBF if EPA were to select zero discharge.

The incremental cost of the BAT/NSPS Option 1 discharge option that is attributable to the retention limitation is projected to be $2,190,046. Several factors combine to produce this result. The average per well costs of SBF wells under BAT/NSPS Option 1 are lower under baseline (approximately $135,000 versus $146,000). This is largely due to the costs of improved cuttings dryer technologies being offset by the cost savings from SBF lost on cuttings, which results from lower SBF retention on cuttings achievable by the improved cuttings dryer technologies. However, these lower per well costs do not translate into a lower aggregate cost because of an increased SBF well count if BAT/NSPS Option 1 versus baseline (264 versus 201 SBF wells, respectively) that includes the conversion of WBF wells to SBF if SBF discharges are authorized. Because of EPA's costing methodology, WBF wells have no associated compliance costs related to this rule because there are no new controls established for WBF wells by this rule. However, for WBF wells that convert to SBF wells, costs are accrued related to the control of SBF discharges promulgated by this rule.

The BAT/NSPS Option 2 incremental cost that is attributable to the retention limitation is $2,370,178 and thus are somewhat increased compared to BAT/NSPS Option 1. This increased cost results from the modest costs related to zero discharge from FRUs that not incurred under BAT/NSPS Option 1.

The BAT/NSPS Option 3 incremental cost that is attributable to the retention limitation is $28,732,260 and reflects the costs of zero discharge of all SBF wastes.

4.6 Costs (Savings) Due to Efficiencies of SBF Drilling over WBF Drilling

4.6.1 *Costs (Savings) for Operators Converting from WBF to SBF*

For the proposal, EPA considered the costs of only SBF and OBF wells. An explicit assumption at that time was that all OBF wells would convert to SBF wells; an unstated assumption of the cost analysis was that no WBF wells would convert to SBF. This approach results in an accounting of treatment and disposal costs for SBF wells above those modeled in the baseline analysis, but does not consider the reduction in WBF costs associated with the WBF wells converting to SBF. Stated differently, any well would only use one mud system over a given interval. The approach used at proposal recognized only the additional costs related to using SBF for a given well interval but failed to recognize the cost savings of not using WBF for that same well over the same interval. Based on information provided by industry regarding

the efficiency of SBF over WBF, projections of well counts by drilling fluid type for this final rule present a different, and more complicated picture.[10]

Based on these revised well count projections, EPA estimates under either discharge option BAT/NSPS Option 1 or BAT/NSPS Option 2, only a subset (approximately 40%) of OBF wells are projected to convert to SBF wells. Also, there will be a subset (approximately 6%) of WBF wells that convert to SBF wells under BAT/NSPS Option 1 or BAT/NSPS Option 2. For the final rule EPA includes an explicit consideration of WBF wells in addition to SBF and OBF wells and these wells have been included in the well count allocation.

With the inclusion of WBF wells into the cost analysis, EPA noted that several additional factors, beyond those considered at proposal, needed to be addressed if EPA was to avoid double counting of WBF-related cost elements. Three cost saving elements were identified: (1) a higher volume of WBFs discharged than SBF; (2) reduced SBF rig time compared to WBF; and (3) zero discharge costs if WBF fail the toxicity or sheen limitations. The first of these elements is a savings of the cost of WBF that would have been discharged overboard during the drilling of the SBF well interval. WBFs are much less expensive than SBF (i.e., $45/bbl versus $221/bbl). However, because discharging both WBF-cuttings (including some 5% adherent drilling fluid) and bulk drilling fluid are current practice and authorized under NPDES permits, a far greater volume of WBF is discharged than SBF. For example, for a DWE/SBF well, a total of 1,184 bbl of SBF is projected to be discharged; for a DWE/WBF well, some 19,314 bbl of bulk WBF discharges, and 223 bbl of discharge fluids adhering to 4,468 bbl of wet cuttings, are projected to be discharged. Thus, the cost of discarded SBF is $261,664 (1,184 bbl x $221/bbl). In contrast, the cost of discarded WBF is $879,165 (19,537 bbl x $45/bbl). Converting to SBF, therefore, saves $617,501 in drilling fluid cost per conversion.

A second cost factor that is associated with operational characteristics of WBF- versus SBF-related wells is that SBF programs are much shorter than WBF programs. This results from several factors: a higher rate of penetration (ROP); fewer technical difficulties (e.g., stuck pipe, severe washout); and the ability to drill at higher deviations during directional drilling. The end result of this difference between WBF and SBF systems is reflected in an approximately two-fold increase in the overall drilling rate afforded by SBF.[10] These factors translate into shorter drilling programs that lower rig costs (normally a day-rate expense for offshore operators) and/or fewer wells to be drilled due to greater directional drilling capabilities.

The third factor related to the WBF system is that a certain percentage of WBF wells can be expected to fail their sheen or aquatic toxicity limitations. These wells require onsite injection or onshore disposal. These are WBF zero discharge-related disposal costs that would not be incurred for wells converting to SBF. Information available on the failure rate of WBF wells could be found in the Development Document for the offshore effluent limitations guidelines. Based on information in the Development Document, a weighted average failure rate of 10.7% can derived. EPA, however, considers the information upon which this parameter is based insufficiently reliable for application to current drilling operations and for inclusion as a formal element in its cost analysis. The Agency has, instead, considered this Offshore Development Document-derived failure rate as the maximum possible value, and has only assessed its impact in ancillary analyses.[32] In the cost analysis presented in this document, this cost element has been omitted. The net effect of this factor is to reduce overall costs to the industry. Thus, omitting this factor effectively constitutes a 0% failure rate, presenting a conservative approach to EPA's cost analysis.

The analysis of these three factors are presented in Worksheet No. 23, Appendix VIII-2. A savings of $15,552,540 in the cost of discharged WBF is projected. The reduction in rig time-associated costs is projected at $33,280,000 (based on WBF well intervals requiring twice as long to complete per well, times the number of WBF projected to convert to SBF wells, and an estimated average day rate of $80,000 (a conservative estimate for the spectrum of offshore rig costs likely in the Gulf of Mexico). A total aggregated cost savings of $48,832,540 is projected from these three factors related to WBF versus SBF systems.

4.6.2 *Cost Impacts to Operators Currently Using SBFs*

Operators currently using certain SBFs may not be able to pass all stock base fluid and SBF-cuttings limitations for discharge. These operators will not be afforded the cost savings described above for operators converting from WBF to SBF. EPA has evaluated the costs to these operators. Costs per well were calculated for conversion from the least expensive SBF EPA has used in its cost analyses (i.e., IO at $160/bbl) to the most expensive SBF (i.e., low viscosity ester at $300/bbl). These incremental per well costs are $43,887 (DWD); $63,567 (DWE); $48,018 (SWD); and $60,118 (SWE) under BAT/NSPS Option 1. For BAT/NSPS Option 2 the incremental per well costs are $44,267 (DWD); $65,857 (DWE); $47,685 (SWD); and $61,129 (SWE).

In addition, EPA considered these operators as part of the Economic Analysis conducted for the final rule. In this analysis, only shallow water SBF wells show a cost increase because the additional recovery of SBF is not sufficient to offset the cost of the equipment; shallow wells use less drilling fluid than

deeper wells. The increase, however, is three-tenths of one percent. A certain percentage of wells might incur a higher cost for SBFs that meet the stock limitations over SBFs that do not. EPA also examined this type of increase by modeling a cost increase from $160/bbl for the SBF and a primary shale shaker to $300/bbl for the SBF and a cuttings dryer[4]. For shallow water wells, the incremental cost was $48,000 for a development well (compared to a $2.9 million total baseline drilling cost) and $61,000 for an exploratory well (compared to a $4.9 million total baseline drilling cost).

In other words, the extremely conservative assumptions lead to no more than a 1.7 percent increase in the total drilling cost. It is unlikely that such a small increase in total drilling cost would affect the decision whether or not to drill. It would only make sense not to drill a well if the difference in estimated net present values of a project with and without that well is less than the incremental cost of the more expensive fluid for that well. This might happen when wells are drilled into marginal fields. To examine the highest number of operations that might be affected by increased drilling fluid costs, EPA examined the number of wells per year that have been drilled recently using SBFs in shallow water operations, i.e, where SBF formulations might have to be changed to meet the BAT requirements. EPA identified about 40 wells in this category, about 3 percent of all wells drilled annually in the Gulf of Mexico. Thus, no more than 3 percent of Gulf wells would not be drilled. Because it is likely that any wells not drilled would be in marginal fields, lost production would most likely be far less than 3 percent of Gulf production. There is the social cost of the lost production as well (which does not affect the operator), but that should be small relative to the total recoverable production in the Gulf, since it would affect a relatively small number of wells and these are wells drilled into marginal fields.

4.7 Net Incremental BAT Costs/Savings

Net incremental BAT costs/savings are determined for this final rule. The net BAT incremental cost for any option considered is the sum of the savings accruing from the retention limit and the savings from using SBF instead of WBFs. Net incremental compliance costs for both discharge options reflect a cost savings to industry. For BAT/NSPS Option 1, the net incremental cost is an overall savings of $46,642,494. For BAT/NSPS Option 2, the net incremental cost is an overall savings of $46,462,362. However, for BAT/NSPS Option 3, there is a net incremental cost of $28,732,260.

---

[4]The cost analysis uses a weighted average of SBF fluid costs (over $200/bbl).

4.8 NSPS Compliance Cost Analysis

Table VIII-3 lists the summary results for the NSPS cost analysis, which is conducted using the same methodology and cost data used in the BAT cost analysis. Certain assumptions related to well count allocations were made at proposal that are specific to the NSPS analysis, however. As shown in Table VIII-4, EPA projects that new source wells are located only in the Gulf of Mexico because of the lack of activity in new lease blocks in offshore California, offshore Alaska, and coastal Cook Inlet. New source wells are defined in the offshore guidelines, 40 CFR 435.11(q). With respect to drilling, these include only development wells; exploratory wells are excluded by definition.[12, 20] EPA also estimated that 50% of the DWD wells in the Gulf of Mexico would be new sources because of the rapid expansion in the deep water areas. Because of slower expansion in Gulf of Mexico shallow water areas, EPA estimated that only 5% of SWD wells would be new sources. These assumptions have not changed in the cost analysis for the final rule.

The NSPS cost analysis consists of the same line-item costs as in the analysis for existing sources with the exception for retrofit costs for the add-on, cuttings dryer technology. These retrofit costs are not included for new platforms as these new platforms will be designed to incorporate cuttings dryers in the solids control equipment system. Appendix VIII-2 includes six SBF/OBF/WBF worksheets that present baseline compliance costs (Worksheet NSPS-13), BAT/NSPS Option 1 and BAT/NSPS Option 2 discharge option costs (Worksheets NSPS-14 and NSPS-15), and zero discharge option costs (Worksheets NSPS-17, -18 and -19) for new source wells. The per-well baseline costs for NSPS SBF wells are $117,572 for a DWD well and $77,792 for a SWD well. For NSPS OBF wells, the cost for an SWD well (the only OBF well type projected under NSPS) is $110,715. The total NSPS baseline cost for SBF wells is $2,152,540; for OBF wells is $221,430; and for WBF wells is $2,714,235. The total NSPS Gulf of Mexico baseline cost is $2,373,970.

For the BAT/NSPS Option 1 discharge option, the per-well NSPS total costs (including baseline costs and costs of this rule) for SBF wells are $89,105 for a DWD well and $59,624 for a SWD well. For OBF wells the cost for an SWD well (the only OBF well type projected for NSPS) is unchanged versus the baseline cost of $110,715. The aggregate NSPS costs for BAT/NSPS Option 1 are $1,902,672 for SBF wells and $110,715 for OBF wells. The combined aggregate cost for BAT/NSPS Option 1 is $2,013,387.

For the BAT/NSPS Option 2 discharge option the per-well NSPS operational costs for SBF wells are $89,486 ($85,361 for the discharge portion costs; $4,125 for the zero discharge portion) for a DWD

well and $59,370 ($56,664 for the discharge portion; $2,712 for the zero discharge portion) for an SWD well. For OBF wells, the cost for an SWD well (the only OBF well type projected for NSPS) is unchanged versus the baseline or BAT/NSPS Option 1 compliance cost of $110,715. The aggregate NSPS costs for BAT/NSPS Option 2 are $1,906,776 for SBF wells and $110,715 for OBF wells. The combined aggregate cost for BAT/NSPS Option 2 is $2,017,491.

The BAT/NSPS Option 3 zero discharge NSPS per-well costs (under existing requirements and BAT/NSPS Option 3 requirements) for the Gulf of Mexico are based on 100% transport and land disposal for deep water wells and 80% onshore disposal/20% onsite injection for shallow water wells. For an SBF/DWD well, the average cost per well is $236,963 (there are no SBF/SWD wells projected under NSPS BAT/NSPS Option 3). For OBF, the costs per well are $161,416 for a DWD well; for an SWD well costs are $110,715 (onshore disposal) and $83,448 (onsite injection). The aggregate NSPS costs for BAT/NSPS Option 3 are $710,889 for SBF wells and $2,039,092 for OBF wells. The combined aggregate cost for BAT/NSPS Option 3 is $2,749,981.

The incremental costs of the NSPS options considered for this rule result in the savings of $360,583 and $356,479 under BAT/NSPS Option 1 and Option 2, respectively. However, for the BAT/NSPS Option 3 zero discharge option, there is an incremental cost of $376,011.

Also, similar to existing sources, new sources will accrue the same cost benefits of SBF over WBF, as discussed above in Section 4.5, related to discharged WBF cost savings and rig time-related cost savings. These projected WBF-related NSPS cost savings are $683,505 in WBF-discharge savings and $1,440,000 in rig time-related savings. (There are no projected WBF zero discharge savings, even in EPA's ancillary analysis, because there are too few NSPS wells converting from WBF to SBF to statistically project any sheen or aquatic toxicity limitation failures. The net incremental NSPS costs, i.e., the sum of incremental costs and WBF-related cost savings are ($2,484,088) for BAT/NSPS Option 1 technology and ($2,479,984) for BAT/NSPS Option 2 technology. These net incremental costs reflect a net cost savings under either discharge option. Under BAT/NSPS Option 3 zero discharge, the net incremental NSPS cost is $376,011.

5. POLLUTANT LOADINGS (REMOVALS)

The methodology for estimating pollutant loadings and incremental pollutant loadings (removals) effectively parallels that of the compliance cost analysis. The pollutant loadings analysis is based on the waste volumes and number of the four model wells identified in Table VIII-4, and on the pollutant

characteristics of the drilling fluid and cuttings waste stream compiled from EPA and industry sources. The following sections first describe the estimates and input data on which the pollutant loadings (removals) analysis is based, followed by a detailed discussion of the methodology used to calculate the annual incremental removals for both BAT and NSPS levels of regulatory control, and concluding with a presentation of the results and conclusions of this analysis.

For this final rule, EPA identifies effluent removals as a distinct category of pollutant loadings because the pollutants that are not discharged are either injected onsite or disposed onshore, and EPA is combining effluent removals with these "zero discharge" waste loadings for the purposes of the NWQEIs. Table VIII-5 presents a summary of total, industry-wide results, by region, for baseline loadings, both discharge options and the zero discharge option, their compliance loadings, and incremental loadings (removals). These results are discussed in Sections 5.2 through 5.6, which respectively present baseline and the BAT and NSPS options.

5.1 Input Data and Methodology

5.1.1 *SBF and OBF Pollutant Loadings (Removals) in Effluent Discharges, Land Disposal, and Injected Waste*

To calculate pollutant loadings and incremental pollutant loadings (or removals), EPA characterizes the drilling fluid cuttings waste stream in terms of pollutant concentrations, estimates per well pollutant loadings, and projects regional and industry-wide loadings based on per well loadings and well count projections. Incremental pollutant loadings (or removals) are the projected loadings of the various regulatory options under consideration minus the projected baseline pollutant loadings. Effluent loadings are considered separate and distinct from "zero discharge" loadings, which are wastes managed via onsite injection and land disposal. These latter types of waste are included in this section to provide a multi-media perspective of waste generation under each SBF-cuttings regulatory option. These waste volumes are also described in the NWQEI section, Chapter IX.

Pollutants in SBF and OBF derive from three sources: the base fluid, i.e., mineral oil-based drilling fluid or internal olefin synthetic-based drilling fluid; drill cuttings; and formation oil. Section VII.3 of this document presents detailed discussions of the characteristics of these sources that EPA considered in its analysis of pollutant loadings and removals. Table VII-1 lists the pollutant concentrations that EPA uses to calculate pollutant loadings.

In addition to pollutant concentrations, EPA estimated per-well waste volumes, as presented in Section VII.4. EPA's derivation of model well volumes is described in Chapter VII, Section 4.2 and is summarized in Table VII-2. Based on the drilling fluid characteristics and model well volumes, EPA derives per well SBF/OBF waste volumes. The input data and calculations used to derive these waste volumes are given in Table VI-3. Table VII-4 lists EPA's projected waste volumes and loadings for the four model wells. For each model well, three sets of calculations are developed for the long-term average SBF ROC: at 10.2% (baseline), at 4.03% (BAT/NSPS Option 1), and at 3.82% (BAT/NSPS Option 2). These calculations derive the per well volumes of mineral oil or synthetic base fluid, water, barite, dry cuttings and formation oil in the waste stream.

TABLE VIII-5
SUMMARY TOTAL POLLUTANT LOADINGS AND INCREMENTAL LOADINGS (REMOVALS)
FOR LARGE VOLUME WASTES FROM EXISTING SOURCES
(lbs/year)

	Loadings				Incremental Loadings (Removals)			
	Gulf of Mexico	California	Cook Inlet, Alaska	Total	Gulf of Mexico	Califo r-nia	Cook Inlet, Alaska	Total
Baseline								
Effluent Discharge	2,330,975,121	9,617,040	8,407,772	2,348,999,932				
Zero Discharge								
Onsite Injection	11,862,178	1,945,148	1,945,148	15,752,474				
Onshore Disposal	47,448,711	0	0	47,448,711				
Total	2,390,286,010	11,562,188	10,352,920	2,412,201,117				
BAT/NSPS Option 1 (4.03% SBF Retention)								
Effluent Discharge	2,223,130,197	9,617,040	8,960,568	2,241,707,804	(107,844,924)	0	552,796	(107,292,128)
Zero Discharge								
Onsite Injection	7,092,172	1,945,148	1,316,784	10,354,104	(4,770,006)	0	(628,364)	(5,398,370)
Onshore Disposal	28,368,689	0	0	28,368,689	(19,080,022)	0	0	(19,080,022)
Total	2,258,591,058	11,562,188	10,277,352	2,280,430,597	(131,694,952)	0	(75,568)	(131,770,520)
BAT/NSPS Option 2 (3.82% SBF Retention)								
Effluent Discharge	2,215,568,632	9,617,040	8,944,468	2,234,130,139	(115,406,489)	0	536,696	(114,869,793)
Zero Discharge								
Onsite Injection	7,092,172	1,945,148	1,332,884	10,370,204	(4,770,006)	0	(612,264)	(5,382,270)
Onshore Disposal	35,930,254	0	0	35,930,254	(11,518,457)	0	0	(11,518,457)
Total	2,258,591,058	11,562,188	10,277,352	2,280,430,597	(131,694,952)	0	(75,568)	(131,770,520)
BAT/NSPS Option 3 (Zero Discharge SBF)								
Effluent Discharge	2,144,121,984	9,617,040	8,407,772	2,162,146,796	(186,853,137)	0	0	(186,853,137)
Zero Discharge								
Onsite Injection	36,101,236	1,945,148	1,945,148	39,991,532	24,239,058	0	0	24,239,058
Onshore Disposal	224,633,126	0	0	224,633,126	177,184,415	0	0	177,184,415
Total	2,404,856,346	11,562,188	10,352,920	2,426,771,454	14,570,336	0	0	14,570,336

The general assumptions EPA uses to develop SBF/OBF model well waste volumes and pollutant concentrations are summarized as follows:

- Model drilling waste volumes are based on four model wells, as shown in Table VII-4.
- Total hole volume equals gage hole plus 7.5% additional volume due to SBF washout (see Section VII.4.2.1).
- Solids control equipment perform equally for both OBF- and SBF-cuttings (see Section VII.5.3).[5]
- Model formulation for SBFs and OBFs is 47% (wt.) base fluid, 33% (wt.) solids, 20% (wt.) water, and this formulation remains constant throughout the solids control system (see Section VII.3.1); mud density is 9.65 lb/gal based on the above composition.
- All solids in a model drilling fluid are barite (see Section VII.3.1).
- Model drilling waste components are drilling fluid (SBF or OBF), dry cuttings, and 0.2% (vol.) formation oil (see Section VII.3.3).
- Model long-term average retention values for drilling fluid on cuttings is 10.2% for baseline wells, 4.03% for BAT/NSPS Option 1 wells, and 3.82% for BAT/NSPS Option 2 wells (see Section VIII.4.2.3).

For SBF and OBF, the per-well waste volume and loading estimates listed in Table VII-4 are multiplied by the pollutant concentrations in Table VII-1 to determine the per-well pollutant loadings. As in the compliance cost analysis, the per-well values for conventional pollutants (TSS; oil and grease) are then multiplied by the numbers of wells in each option and each geographic area, as listed in Table VIII-4, to determine total, industry-wide pollutant loadings. Incremental pollutant loadings or removals are then calculated as the difference between baseline loadings and option loadings.

Appendix VIII-4 contains of the detailed worksheets that calculate the per well loadings (which are the same for both existing and new sources) and the regional and industry-wide loadings and incremental loadings (removals). All worksheets (SBF-, OBF-, or WBF-related) that are mentioned in the remainder of Section 5 (Sections 5.2 through 5.6) are from Appendix VIII-4. The SBF/OBF analyses presented in Appendix VIII-4 are organized as follows:

> Worksheets 1 through 4: Baseline SBF/OBF effluent loadings, BAT/NSPS Option 1 effluent loadings, BAT/NSPS Option 2 effluent loadings, and BAT/NSPS Option 3 effluent loadings for discharges from DWD, DWE, SWD, and SWE wells, respectively.

The costs and non-water quality environmental impacts of the wastes covered by this rule are important factors in the final determinations of this rule. As such, the quantity and fate of wastes subject to zero discharge are important considerations in the loadings analysis for this final rule. Zero discharge wastes have two fates: they are ground onsite and injected into compatible sub-seabed formations or they are placed into containers, transported to shore, and disposed via landfarming or (onshore) subsurface injection. The quantities of SBF and OBF that are subject to zero discharge are also detailed in Appendix VIII-4 worksheets. These zero discharge quantities are determined identically to discharge loadings, i.e., loadings per well times the number of wells. These worksheets are organized as follows:

> Worksheets 5 through 7: SBF/OBF onsite injection/onshore disposal loadings for existing sources in the Gulf of Mexico, offshore California, and Cook Inlet, Alaska, respectively, including baseline, BAT/NSPS Option 1, BAT/NSPS Option 2, and BAT/NSPS Option 3 options
>
> Worksheets 8 through 10: SBF/OBF onsite injection/onshore disposal loadings for new sources in the Gulf of Mexico, offshore California, and Cook Inlet, Alaska, respectively, including baseline, BAT/NSPS Option 1, BAT/NSPS Option 2, and BAT/NSPS Option 3 options.

The per well loadings in Appendix VIII-4 are multiplied by the corresponding numbers of wells presented in Table VIII-4.

5.1.2 *WBF Well Loadings (Removals)*

The derivation of waste volumes and pollutant characterization for WBF, Chapter VII, Section 4.2.5, is discussed in detail. These WBF volumes and characterizations are based on data contained in the Development Document for the final offshore subcategory effluent limitations guidelines (EPA 821-R-93-003).

For this final rule, EPA presents projected WBF waste volumes, conventional pollutant concentrations (TSS and oil and grease), and nonconventional and toxic pollutant concentrations (Chapter VII, Section 4.2.5); projected frequency of mineral oil usage for lubricity or as a spotting fluid; and projected and the frequency of WBF failures to meet sheen or aquatic toxicity limitations. Appendix VIII-4 contains the detailed worksheets that calculate per well loadings, regional and industry-wide loadings, and incremental loadings (removals). The organization of these WBF worksheets in Appendix VIII-4 is as follows:

Worksheets 11 through 13: WBF effluent loadings from existing sources, respectively for conventional pollutants from discharged WBF cuttings, for conventional pollutants from discharged drilling fluid, and for nonconventional and toxic pollutants from discharged drilling fluid.

Worksheets 14 through 16: WBF effluent loadings from new sources, respectively for conventional pollutants from WBF cuttings, for conventional pollutants from drilling fluid, and nonconventional and toxic pollutants from drilling fluids.

5.2. Baseline Pollutant Loadings for Existing Sources

As in the cost analysis, EPA establishes a loadings baseline by calculating pollutant loadings for the baseline wells identified in Table VIII-4. Table VIII-6, which presents the analysis for the BAT/NSPS Option 1 discharge option, includes a presentation of projected annual baseline effluent loadings for SBF, OBF, and WBF. For wells that currently discharge SBF (baseline SBF wells), effluent pollutant loadings are calculated assuming current technology that treats cuttings to 10.2% retention. The total annual baseline effluent discharge loading for SBF wells in the Gulf of Mexico is 237,890,828 lbs; for offshore California and coastal Cook Inlet, there are no SBF effluent loadings. Baseline OBF wells in the Gulf of Mexico, offshore California, and coastal Cook Inlet all have baseline effluent discharge loadings of zero because OBF wells require zero discharge. Baseline effluent loading from WBF wells in the Gulf of Mexico is 2,093,084,293 lbs/yr; for offshore California is 9,617,040 lbs/yr; for coastal Cook Inlet, Alaska is 8,407,772 lbs/yr; and, in aggregate, totals 2,111,109,104 lbs/yr. The combined SBF/OBF/WBF baseline discharge loading for the Gulf of Mexico is 2,330,975,121 lbs/yr; for offshore California it is 9,617,040 lbs/yr; for coastal Cook Inlet it is 8,407,772 lbs/yr; and in aggregate totals 2,348,999,932 lbs/yr.

At present no SBF operators are practicing zero discharge via onsite injection for the Gulf of Mexico, offshore California, or coastal Cook Inlet. For OBF, the zero discharge baseline loading via onsite injection for the Gulf of Mexico is 11,862,178 lbs; for offshore California it is 1,945,148 lbs; for coastal Cook Inlet it also is 1,945,148 lbs; and in the aggregate onsite injection of OBF totals 15,752,474 lbs.

TABLE VIII-6
SBF, OBF, AND WBF ANNUAL BAT/NSPS OPTION 1 POLLUTANT LOADINGS AND INCREMENTAL LOADINGS (REMOVALS) FOR LARGE VOLUME WASTES FROM EXISTING SOURCES
(lbs/year)

		Gulf of Mexico	Offshore California	Cook Inlet, Alaska	Total
Baseline Technology Loadings					
Discharge with 10.2% retention of SBF base fluid on cuttings	SBF	237,890,828	0	0	237,890,828
	OBF	0	0	0	0
	WBF	2,093,084,293	9,617,040	8,407,772	2,111,109,104
	Total	2,330,975,121	9,617,040	8,407,772	2,348,999,932
Zero Discharge via onsite injection	SBF	0	0	0	0
	OBF	11,862,178	1,945,148	1,945,148	15,752,474
	WBF	0	0	0	0
	Total	11,862,178	1,945,148	1,945,148	15,752,474
Zero Discharge via land disposal	SBF	0	0	0	0
	OBF	28,368,689	0	0	28,368,689
	WBF	0	0	0	0
	Total	28,368,689	0	0	28,368,689
BAT/NSPS Option 1 Loadings					
Discharge with 4.03% retention of SBF base fluid on cuttings	SBF	259,628,314	0	552,796	260,181,110
	OBF	0	0	0	0
	WBF	1,963,501,883	9,617,040	8,407,772	1,981,526,694
	Total	2,223,130,197	9,617,040	8,960,568	2,241,707,804
Zero Discharge via onsite injection	SBF	0	0	0	0
	OBF	7,092,172	1,945,148	1,316,784	10,354,104
	WBF	0	0	0	0
	Total	7,092,172	1,945,148	1,316,784	10,354,104
Zero Discharge via land disposal	SBF	0	0	0	0
	OBF	47,448,711	0	0	47,448,711
	WBF	0	0	0	0
	Total	47,448,711	0	0	47,448,711
Incremental Pollutant Loadings (Removals)					
Discharge with 4.03% retention of SBF base fluid on cuttings	SBF	21,737,486	0	552,796	22,290,282
	OBF	0	0	0	0
	WBF	(129,582,410)	0	0	(129,582,410)
	Total	(107,844,924)	0	552,796	(107,292,128)
Zero Discharge via onsite injection	SBF	0	0	0	0
	OBF	(4,770,006)	0	(628,364)	(5,398,370)
	WBF	0	0	0	0
	Total	(4,770,006)	0	(628,364)	(5,398,370)
Zero Discharge via land disposal	SBF	0	0	0	0
	OBF	(19,080,022)	0	0	(19,080,022)
	WBF	0	0	0	0
	Total	(19,080,022)	0	0	(19,080,022)

There are no zero discharge baseline loading via onshore disposal of SBF for the Gulf of Mexico, offshore California, or coastal Cook Inlet. For OBF, the zero discharge baseline loading via onshore disposal for the Gulf of Mexico is 47,448,711 lbs/yr; there are no offshore California or coastal Cook Inlet OBF loadings via onshore disposal.

5.3 BAT Option 1 Pollutant Loadings (Removals) for Existing Sources

As the next step in the analysis, EPA calculated pollutant loadings resulting from a discharge limitation based on the combined wastes of cuttings dryer add-on technology and FRUs (i.e., based on an SBF-cuttings retention of 4.03%). As in the cost analysis, EPA estimates BAT Option 1 pollutant loadings for the BAT Option 1 wells identified in Table VIII-4. Total annual BAT Option 1 discharge option loadings for the Gulf of Mexico, offshore California, and coastal Cook Inlet, Alaska are shown in Table VIII-6. Incremental pollutant loadings (removals) are calculated by subtracting baseline loadings from the BAT Option 1 loadings.

The total annual BAT Option 1 effluent loadings for SBF wells in the Gulf of Mexico is 259,628,314 lbs/yr; for offshore California there are no SBF effluent loadings; for coastal Cook Inlet it is 552,796 lbs/yr; in the aggregate, SBF annual effluent loadings are 260,181,110 lbs/yr. BAT Option 1 OBF wells in offshore California, coastal Cook Inlet, and the Gulf of Mexico all have BAT Option 1 effluent loadings of zero because OBF wells require zero discharge. BAT Option 1 effluent loadings from WBF wells in the Gulf of Mexico are 1,963,501,883 lbs/yr; for offshore California are 9,617,040 lbs/yr; for Cook Inlet, Alaska, are 8,407,772 lbs/yr; and in aggregate, totals 1,981,526,694 lbs/yr. The combined SBF/OBF/WBF BAT Option 1 effluent loadings for the Gulf of Mexico are 2,223,130,197 lbs/yr; for offshore California are 9,617,040 lbs/yr; for coastal Cook Inlet are 8,960,568 lbs/yr; and in aggregate, the total is 2,241,707,804 lbs/yr.

There are no zero discharge BAT Option 1 loadings via onsite injection of SBF for the Gulf of Mexico, offshore California, or coastal Cook Inlet. For OBF, the zero discharge BAT Option 1 loading via onsite injection for the Gulf of Mexico is 7,092,172 lbs/yr; for offshore California it is 1,945,148 lbs/yr; for coastal Cook Inlet it is 1,316,784 lbs/yr; and in the aggregate, onsite injection of OBF totals 10,354,104 lbs/yr.

There are no zero discharge BAT Option 1 loadings via onshore disposal of SBF for the Gulf of Mexico, offshore California, or coastal Cook Inlet. For OBF, the zero discharge BAT Option 1 loading via

onshore disposal for the Gulf of Mexico is 28,368,689 lbs/yr; there are no onshore disposal loadings for offshore California and coastal Cook Inlet.

The total annual BAT Option 1 incremental effluent discharge loading for SBF wells in the Gulf of Mexico is 21,737,486 lbs/yr; for coastal Cook Inlet it is 552,796 lbs/yr; in the aggregate, SBF annual loading is 22,290,282 lbs/yr. BAT Option 1 incremental loading from WBF wells in the Gulf of Mexico is (129,582,410) lbs/yr. The combined SBF/OBF/WBF BAT Option 1 incremental discharge loading for the Gulf of Mexico is (107,844,924) lbs/yr; for coastal Cook Inlet is 552,796 lbs/yr; and in aggregate, the total is (107,292,128) lbs/yr.

There are no zero discharge BAT Option 1 incremental loadings via onsite injection of SBF for the Gulf of Mexico, offshore California, or coastal Cook Inlet. For OBF, the zero discharge BAT Option 1 incremental loading via onsite injection for the Gulf of Mexico is (4,770,006) lbs/yr; for coastal Cook Inlet it is (628,364) lbs/yr; and in the aggregate onsite injection of OBF totals (5,398,370) lbs/yr.

There are no zero discharge BAT Option 1 incremental loadings via onshore disposal of SBF for the Gulf of Mexico, offshore California, or coastal Cook Inlet. For OBF, the zero discharge BAT Option 1 incremental loading via onshore disposal for the Gulf of Mexico is (19,080,022) lbs/yr.

5.4 BAT Option 2 Pollutant Loadings (Removals) for Existing Sources

In addition to baseline and BAT Option 1 loadings, EPA calculated pollutant loadings resulting from a discharge limitation based solely on the wastes of cuttings dryer add-on technology (i.e., based on an SBF-cuttings retention of 3.82%). As in the cost analysis, EPA establishes BAT Option 2 pollutant loadings for the BAT Option 2 wells identified in Table VIII-4. Total annual BAT Option 2 discharge option loadings for the Gulf of Mexico, offshore California, and coastal Cook Inlet, Alaska are shown in Table VIII-7. Incremental pollutant loadings (removals) are calculated by subtracting baseline loadings from the BAT Option 2 loadings.

The total annual BAT Option 2 effluent loadings for SBF wells in the Gulf of Mexico is 252,066,749 lbs/yr; for offshore California it is zero; for coastal Cook Inlet it is 536,696 lbs/yr; in the aggregate, SBF annual effluent loadings are 252,603,445 lbs/yr. BAT Option 2 OBF wells in offshore California, coastal Cook Inlet, and the Gulf of Mexico all have BAT Option 2 loadings of zero because OBF wells require zero discharge. BAT Option 2 effluent loadings from WBF wells in the Gulf of Mexico are

1,963,501,883 lbs/yr; for offshore California are 9,617,040 lbs/yr; for Cook Inlet, Alaska, are 8,407,772 lbs/yr; and in aggregate totals 1,981,526,694 lbs/yr. The combined SBF/OBF/WBF BAT Option 2 effluent loadings for the Gulf of Mexico are 2,215,568,632 lbs/yr; for offshore California are 9,617,040 lbs/yr; for coastal Cook Inlet are 8,944,468 lbs/yr; and in aggregate, the total is 2,234,130,139 lbs/yr.

The zero discharge BAT Option 2 loading via onsite injection of SBF is zero for the Gulf of Mexico and offshore California; for coastal Cook Inlet it is 16,100 lbs/yr. For OBF, the zero discharge BAT Option 2 loading via onsite injection for the Gulf of Mexico is 7,092,172 lbs/yr; for offshore California it is 1,945,148 lbs/yr; for coastal Cook Inlet it is 1,316,784 lbs/yr; and in the aggregate onsite injection of OBF totals 10,354,104 lbs/yr. The combined SBF/OBF/WBF BAT Option 2 zero discharge via onsite injection loadings for coastal Cook Inlet are 1,332,884 lbs/yr; and in aggregate totals 10,370,204 lbs/yr.

TABLE VIII-7
SBF, OBF, AND WBF ANNUAL BAT OPTION 2 POLLUTANT LOADINGS AND INCREMENTAL LOADINGS (REMOVALS) FOR LARGE VOLUME WASTES FROM EXISTING SOURCES
(lbs/year)

		Gulf of Mexico	Offshore California	Cook Inlet, Alaska	Total
Baseline Technology Loadings					
Discharge with 10.2% retention of SBF base fluid on cuttings	SBF	237,890,828	0	0	237,890,828
	OBF	0	0	0	0
	WBF	2,093,084,293	9,617,040	8,407,772	2,111,109,104
	Total	2,330,975,121	9,617,040	8,407,772	2,348,999,932
Zero Discharge via onsite injection	SBF	0	0	0	0
	OBF	11,862,178	1,945,148	1,945,148	15,752,474
	WBF	0	0	0	0
	Total	11,862,178	1,945,148	1,945,148	15,752,474
Zero Discharge via land disposal	SBF	0	0	0	0
	OBF	28,368,689	0	0	28,368,689
	WBF	0	0	0	0
	Total	28,368,689	0	0	28,368,689
BAT/NSPS Option 2 Loadings					
Discharge with 3.82% retention of SBF base fluid on cuttings	SBF	252,066,749	0	536,696	252,603,445
	OBF	0	0	0	0
	WBF	1,963,501,883	9,617,040	8,407,772	1,981,526,694
	Total	2,215,568,632	9,617,040	8,944,468	2,234,130,139
Zero Discharge via onsite injection	SBF	0	0	16,100	16,100
	OBF	7,092,172	1,945,148	1,316,784	10,354,104
	WBF	0	0	0	0
	Total	7,092,172	1,945,148	1,332,884	10,370,204
Zero Discharge via land disposal	SBF	7,561,565	0	0	7,561,565
	OBF	28,368,689	0	0	28,368,689
	WBF	0	0	0	0
	Total	35,930,254	0	0	35,930,254
Incremental Pollutant Loadings (Removals)					
Discharge with 3.82% retention of base fluid on cuttings	SBF	14,175,921	0	536,696	14,712,617
	OBF	0	0	0	0
	WBF	(129,582,410)	0	0	(129,582,410)
	Total	(115,406,489)	0	536,696	(114,869,793)
Zero Discharge via onsite injection	SBF	0	0	16,100	16,100
	OBF	(4,770,006)	0	(628,364)	(5,398,370)
	WBF	0	0	0	0
	Total	(4,770,006)	0	(612,264)	(5,382,270)
Zero Discharge via land disposal	SBF	7,561,565	0	0	7,561,565
	OBF	(19,080,022)	0	0	(19,080,022)
	WBF	0	0	0	0
	Total	(11,518,457)	0	0	(11,518,457)

The zero discharge BAT Option 2 loading via onshore disposal of SBF, OBF, or WBF only occur in the Gulf of Mexico. For SBF, the BAT Option 2 loading via onshore disposal is 7,561,565 lbs/yr; for OBF, BAT Option 2 loading via onshore disposal is 28,368,689 lbs/yr. The combined SBF/OBF/WBF BAT Option 2 zero discharge via onshore disposal loadings for the Gulf of Mexico is 35,930,254 lbs/yr.

The total annual BAT Option 2 incremental effluent discharge loading for SBF wells in the Gulf of Mexico is 14,175,921 lbs/yr; for coastal Cook Inlet it is 536,696 lbs; in the aggregate, SBF annual effluent loading is 14,712,617 lbs/yr. There are no OBF BAT Option 2 incremental effluent discharge loadings because OBF wells require zero discharge. BAT Option 2 incremental effluent loadings from WBF wells in the Gulf of Mexico are (129,582,410) lbs/yr. The combined SBF/OBF/WBF BAT Option 2 incremental effluent discharge loadings for the Gulf of Mexico are (115,406,489) lbs/yr; for coastal Cook Inlet are 536,696 lbs; and in aggregate totals (114,869,793) lbs/yr.

The zero discharge BAT Option 2 incremental loading via onsite injection of SBF for coastal Cook Inlet is 16,100 lbs/yr. For OBF, the zero discharge BAT Option 2 incremental loading via onsite injection for the Gulf of Mexico is (4,770,006) lbs/yr; for coastal Cook Inlet it is (628,364) lbs/yr; and in the aggregate onsite injection of OBF totals (5,398,370) lbs/yr. The combined SBF/OBF/WBF BAT Option 2 incremental zero discharge via onsite injection loadings for coastal Cook Inlet are (612,264) lbs/yr; and in aggregate totals (5,382,270) lbs/yr.

Zero discharge BAT Option 2 incremental loadings via onshore disposal of SBF, OBF, or WBF only occurs for the Gulf of Mexico. For SBF, the zero discharge BAT Option 2 incremental loading via onshore disposal for the Gulf of Mexico is 7,561,565 and for OBF it is (19,080,022) lbs/yr. The combined SBF/OBF/WBF BAT Option 2 incremental zero discharge via onshore disposal loading for the Gulf of Mexico is (11,518,457) lbs/yr.

5.5 BAT Option 3 Zero Discharge Pollutant Loadings (Removals) for Existing Sources

As in the compliance cost analysis, EPA establishes BAT Option 3 pollutant loadings for the BAT Option 3 wells identified in Table VIII-4. Table VIII-8 summarizes the results for SBF, OBF, and WBF BAT Option 3 compliance and incremental loadings. WBF drilling has a washout rate approximately 6 times greater than either SBF or OBF drilling due to the properties of WBF (e.g., hole stability, lack of shale

inhibition). Therefore, operators that switch from SBF to WBF under the zero discharge option for SBF-cuttings will discharge more cuttings.

The total annual BAT Option 3 loading for WBF wells in the Gulf of Mexico are 2,144,121,984 lbs/yr; for offshore California, are 9,617,040 lbs/yr; for Cook Inlet, Alaska, are 8,407,772 lbs/yr; and in aggregate, the total is 2,111,109,104 lbs/yr.

The zero discharge BAT Option 3 loading via onsite injection of SBF is zero for the Gulf of Mexico, offshore California, and coastal Cook Inlet. For OBF, the zero discharge BAT Option 3 loading via onsite injection for the Gulf of Mexico is 36,101,236 lbs/yr; for offshore California it is 1,945,148 lbs/yr; for coastal Cook Inlet it is 1,945,148 lbs/yr; and in the aggregate onsite injection of OBF totals 39,991,532 lbs/yr.

The zero discharge BAT Option 3 loading via onshore disposal of SBF, OBF, and WBF occurs only in the Gulf of Mexico. For SBF, it is 19,766,219 lbs/yr and for OBF it is 204,866,907 lbs/yr. The combined SBF/OBF/WBF BAT Option 3 zero discharge via onshore disposal loading for the Gulf of Mexico is 224,633,126 lbs/yr.

The total annual BAT Option 3 incremental loading for SBF, OBF, and WBF wells, whether for discharge, zero discharge via onsite injection, or zero discharge via onshore disposal, only occur in the Gulf of Mexico. For SBF, BAT Option 3 incremental discharge loading is (237,890,828) lbs/yr. For OBF, there is no incremental loading because OBF wells require zero discharge. BAT Option 3 incremental loading from WBF wells in the Gulf of Mexico is 51,037,691 lbs/yr. The combined SBF/OBF/WBF BAT Option 3 incremental discharge loadings for the Gulf of Mexico is (186,853,137) lbs/yr.

The zero discharge BAT Option 3 incremental loading via onsite injection of SBF for the Gulf of Mexico is zero; for OBF, the zero discharge BAT Option 3 incremental loading via onsite injection for the Gulf of Mexico is 24,239,058 lbs/yr.

TABLE VIII-8
SBF, OBF, AND WBF ANNUAL BAT OPTION 3 POLLUTANT LOADINGS AND INCREMENTAL LOADINGS (REMOVALS) FOR LARGE VOLUME WASTES FROM EXISTING SOURCES (lbs/year)

		Gulf of Mexico	Offshore California	Cook Inlet, Alaska	Total
Baseline Technology Loadings					
Discharge with 10.2% retention of SBF base fluid on cuttings	SBF	237,890,828	0	0	237,890,828
	OBF	0	0	0	0
	WBF	2,093,084,293	9,617,040	8,407,772	2,162,146,796
	Total	2,330,975,121	9,617,040	8,407,772	2,348,999,932
Zero Discharge via onsite injection	SBF	0	0	0	0
	OBF	11,862,178	1,945,148	1,945,148	15,752,474
	WBF	0	0	0	0
	Total	11,862,178	1,945,148	1,945,148	15,752,474
Zero Discharge via land disposal	SBF	0	0	0	0
	OBF	28,368,689	0	0	28,368,689
	WBF	0	0	0	0
	Total	28,368,689	0	0	28,368,689
BAT Option 3 Loadings					
Zero discharge of SBF base fluid on cuttings	SBF	0	0	0	0
	OBF	0	0	0	0
	WBF	2,144,121,984	9,617,040	8,407,772	2,162,146,796
	Total	2,144,121,984	9,617,040	8,407,772	2,162,146,796
Zero Discharge via onsite injection	SBF	0	0	0	0
	OBF	36,101,236	1,945,148	1,945,148	39,991,532
	WBF	0	0	0	0
	Total	36,101,236	1,945,148	1,945,148	39,991,532
Zero Discharge via land disposal	SBF	19,766,219	0	0	19,766,219
	OBF	204,866,907	0	0	204,866,907
	WBF	0	0	0	0
	Total	224,633,126	0	0	224,633,126
Incremental Pollutant Loadings (Removals)					
Zero discharge of SBF base fluid on cuttings	SBF	(237,890,828)	0	0	(237,890,828)
	OBF	0	0	0	0
	WBF	51,037,691	0	0	51,037,691
	Total	(186,853,137)	0	0	(186,853,137)
Zero Discharge via onsite injection	SBF	0	0	0	0
	OBF	24,239,058	0	0	24,239,058
	WBF	0	0	0	0
	Total	24,239,058	0	0	24,239,058
Zero Discharge via land disposal	SBF	19,766,219	0	0	19,766,219
	OBF	157,418,196	0	0	157,418,196
	WBF	0	0	0	0
	Total	177,184,415	0	0	177,184,415

The zero discharge BAT Option 3 incremental loading via onshore disposal of SBF for the Gulf of Mexico is 19,766,219 lbs/yr; for OBF, it is 157,418,196 lbs/yr; for WBF it is 4,931,441. The combined SBF/OBF/WBF BAT Option 3 incremental zero discharge via onshore disposal loadings for the Gulf of Mexico totals 182,115,856 lbs/yr.

5.6 Pollutant Removals Analysis for New Sources

The method of estimating pollutant loadings and removals for new sources is the same as described above for existing sources. As shown in Table VIII-4, EPA projects that 60 new source wells will be annually drilled in the Gulf of Mexico. Table VIII-9 summarizes the baseline loadings, regulatory option loadings, and incremental compliance pollutant loadings (removals) for new source wells. Table VIII-10 details the SBF, OBF, and WBF NSPS loadings for discharge and zero discharge options, for the baseline and the three options considered.

The total annual baseline NSPS effluent discharge loading for SBF wells in the Gulf of Mexico is 17,405,127 lbs/yr. Baseline OBF wells in the Gulf of Mexico have NSPS baseline discharge loadings of zero because OBF wells require zero discharge. Baseline loading from WBF wells in the Gulf of Mexico is 92,903,606 lbs/yr. The combined SBF/OBF/WBF baseline NSPS discharge loading for the Gulf of Mexico is 110,308,733 lbs/yr.

The zero discharge NSPS baseline loading via onsite injection for SBF and OBF in the Gulf of Mexico is zero. The zero discharge NSPS baseline loading via onshore disposal of SBF for the Gulf of Mexico is zero; for OBF it is 1,256,728 lbs/yr.

TABLE VIII-9
SUMMARY TOTAL POLLUTANT LOADINGS AND INCREMENTAL LOADINGS (REMOVALS)
FOR LARGE VOLUME WASTES FROM NEW SOURCES
(lbs/year)

	Loadings				Incremental Loadings (Removals)			
	Gulf of Mexico	California	Cook Inlet, Alaska	Total	Gulf of Mexico	California	Cook Inlet, Alaska	Total
Baseline								
Effluent Discharge	110,308,733	0	0	110,308,733				
Zero Discharge								
Onsite Injection	0	0	0	0				
Onshore Disposal	1,256,728	0	0	1,256,728				
Total	111,565,461	0	0	111,565,461				
NSPS Option 1 (4.03% SBF Retention)								
Effluent Discharge	107,704,029	0	0	107,704,029	(2,604,704)	0	0	(2,604,704)
Zero Discharge								
Onsite Injection	0	0	0	0	0	0	0	0
Onshore Disposal	628,364	0	0	628,364	(628,364)	0	0	(628,364)
Total	108,332,393	0	0	108,332,393	(3,233,068)	0	0	(3,233,068)
NSPS Option 2 (3.82% SBF Retention)								
Effluent Discharge	107,185,411	0	0	107,185,411	(3,123,322)	0	0	(3,123,322)
Zero Discharge								
Onsite Injection	0	0	0	0	0	0	0	0
Onshore Disposal	1,146,982	0	0	1,146,982	(109,746)	0	0	(109,746)
Total	108,332,393	0	0	108,332,393	(3,233,068)	0	0	(3,233,068)
NSPS Option 3 (Zero Discharge SBF)								
Effluent Discharge	100,387,607	0	0	100,387,607	(9,921,126)	0	0	(9,921,126)
Zero Discharge								
Onsite Injection	879,710	0	0	879,710	879,710	0	0	879,710
Onshore Disposal	13,978,597	0	0	13,978,597	12,721,869	0	0	12,721,869
Total	115,245,913	0	0	115,245,913	3,680,452	0	0	3,680,452

TABLE VII-10
SUMMARY SBF, OBF, AND WBF ANNUAL BASELINE, BAT/NSPS OPTION 1, BAT/NSPS OPTION 2, AND BAT/NSPS OPTION 3 POLLUTANT LOADINGS AND INCREMENTAL LOADINGS (REMOVALS) FOR LARGE VOLUME WASTES FROM NEW SOURCES (lbs/year)

		Baseline	BAT/NSPS Option 1	BAT/NSPS Option 2	BAT/NSPS Option 3
Annual Loadings					
Discharge with 10.2% retention of SBF base fluid on cuttings	SBF	17,405,127	20,241,106	19,722,488	0
	OBF	0	0	0	0
	WBF	92,903,606	87,462,923	87,462,923	100,387,607
	Total	110,308,733	107,704,029	107,185,411	100,387,607
Zero discharge via onsite injection	SBF	0	0	0	0
	OBF	0	628,364	0	879,710
	WBF	0	0	0	0
	Total	0	628,364	0	879,710
Zero discharge via onshore disposal	SBF	0	0	518,618	2,852,661
	OBF	1,256,728	628,364	628,364	11,125,935
	WBF	0	9,041,262	0	0
	Total	1,256,728	9,669,626	1,146,982	13,978,597
Totals	SBF	17,405,127	20,241,106	20,241,106	2,852,661
	OBF	1,256,728	628,364	628,364	12,005,645
	WBF	92,903,606	77,805,785	77,805,785	89,393,659
	Total	111,565,461	98,675,255	98,675,255	104,251,965
Incremental Pollutant Loadings (Removals)					
Discharge with 10.2% retention of SBF base fluid on cuttings	SBF		2,835,979	2,317,361	(17,405,127)
	OBF		0	0	0
	WBF		(5,440,683)	(5,440,683)	7,484,001
	Total		(2,604,704)	(3,123,322)	(9,921,126)
Zero discharge via onsite injection	SBF		0	0	0
	OBF		0	0	879,710
	WBF		0	0	0
	Total		0	0	879,710
Zero discharge via onshore disposal	SBF		0	518,618	2,852,661
	OBF		(628,364)	(628,364)	9,869,207
	WBF		0	0	0
	Total		(628,364)	(109,746)	12,721,869
Totals	SBF		2,835,979	2,835,979	(14,552,466)
	OBF		(628,364)	(628,364)	10,748,917
	WBF		(5,440,683)	(5,440,683)	7,484,001
	Total		(5,785,068)	(3,133,068)	3,680,453

The total annual NSPS 1 effluent discharge loading for SBF wells in the Gulf of Mexico is 20,241,106 lbs/yr; for OBF it is zero; for WBF it is 87,462,923 lbs/yr. The combined SBF/OBF/WBF baseline effluent discharge loading for the Gulf of Mexico is 107,704,029 lbs/yr.

The zero discharge NSPS 1 loading via onsite injection of SBF and OBF in the Gulf of Mexico is zero. The zero discharge NSPS 1 loading via onshore disposal of SBF in the Gulf of Mexico is zero and for OBF it is 628,364 lbs/yr.

The NSPS 2 effluent discharge loading for SBF wells in the Gulf of Mexico is 19,722,488 lbs/yr; for OBF it is zero; for WBF it is 87,462,923 lbs/yr; in aggregate, SBF/OBF/WBF discharge loadings total 107,185,411 lbs/yr. For the zero discharge NSPS 2 loading via onsite injection, SBF and OBF have zero loadings. The zero discharge NSPS 2 loading via onshore disposal of SBF for the Gulf of Mexico is 518,618 lbs/yr and for OBF it is 628,364 lbs/yr; the aggregate onshore disposal loading of SBF/OBF/WBF is 1,146,982 lbs/yr.

The total annual NSPS 3 zero discharge loading for SBF and OBF wells in the Gulf of Mexico is zero; for WBF wells it is 100,387,607 lbs/yr. For the zero discharge NSPS 3 loadings via onsite injection, there are no SBF loadings; OBF loading is 879,710 lbs/yr; WBF loading is 1,661,120 lbs/yr. NSPS zero discharge loading via onshore disposal from SBF wells in the Gulf of Mexico is 2,852,661 and for OBF it is 11,125,935 lbs/yr. The combined SBF/OBF/WBF NSPS 3 zero discharge loading via onshore disposal for the Gulf of Mexico is 13,978,597 lbs/yr.

The total annual NSPS 1 incremental effluent discharge loading for SBF wells in the Gulf of Mexico is 2,835,979 lbs/yr; for OBF it is zero; for WBF it is (5,440,683) lbs/yr; in the aggregate, SBF/OBF/WBF incremental loading is (2,604,704) lbs/yr. NSPS 1 zero discharge incremental loadings via onsite injection for all SBF and OBF wells are zero. NSPS 1 zero discharge incremental loadings via onshore disposal for SBF are zero; for OBF it is (628,364) lbs/yr.

The total annual NSPS 2 incremental effluent discharge loading for wells in the Gulf of Mexico is 2,317,361 lbs/yr; for OBF it is zero; for WBF it is (5,440,683) lbs/yr; in the aggregate, SBF/OBF/WBF loadings total (3,123,322) lbs/yr. There are no NSPS 2 incremental zero discharge loadings via onsite injection for SBF, OBF, or WBF wells.

The zero discharge NSPS 2 incremental loading via onshore disposal of SBF for the Gulf of Mexico is 518,618 lbs/yr and for OBF it is (628,364) lbs/yr. The combined SBF/OBF/WBF NSPS 2 incremental zero discharge via onshore disposal loading for the Gulf of Mexico is (109,746) lbs/yr.

The total annual NSPS 3 effluent discharge incremental loading for SBF wells in the Gulf of Mexico is (17,405,127) lbs/yr; for OBF it is zero; for WBF it is 7,484,001. The combined SBF/OBF/WBF NSPS 3 zero effluent discharge loading for the Gulf of Mexico is (9,921,126) lbs/yr.

The zero discharge NSPS 3 incremental loading via onsite injection of SBF for the Gulf of Mexico is zero. For OBF, the zero discharge NSPS 3 incremental loading via onsite injection is 879,710 lbs/yr.

The zero discharge NSPS 3 incremental loading via onshore disposal of SBF for the Gulf of Mexico is 2,852,661 lbs/yr and for OBF it is 9,869,207 lbs/yr. The combined SBF/OBF/WBF NSPS 3 incremental zero discharge via onshore disposal loading for the Gulf of Mexico is 12,721,869 lbs/yr.

6. REFERENCES

1. McIntyre, J., Pechan. 2000. Memorandum to K. Mahsman, ERG, Revised Engineering Models and Compliance Costs for SBF Rulemaking. 2/23/00. (Record No. III.C.b.2)

2. The Pechan-Avanti Group, Worksheet regarding "Number of Days to Drill Model SBF Wells," 10/27/98

3. Annis, M.R., "Retention of Synthetic-Based Drilling Material on Cuttings Discharged to the Gulf Of Mexico," prepared for the American Petroleum Institute (API) *ad hoc* Retention on Cuttings Work Group under the API Production Effluent Guidelines Task Force. 8/29/97.

4. Daly, J., EPA, Memorandum regarding "October 13, 1998 Teleconference Regarding SBF Use," 10/20/98.

5. Johnston, C.A., EPA. 1999. Memorandum to File regarding Meeting Summary Notes from Newpark Resources, Inc. Facilities Visit and Safeguard SWACO Presentation at the Louisiana Gulf Coast Oil Exposition (LAGCOE) on 10/26/99.

6. Daly, J., EPA, Memorandum regarding "Cost of Synthetic-Based Drilling Fluids (SBF)," 1/15/99.

7. The Pechan-Avanti Group, "Demonstration of the 'Mud 10' Drilling Fluid Recovery Device at the Amoco Marlin Deepwater Drill Site." 8/7/98.

8. Mud Recovery Systems, Ltd., Product brochure entitled "M.U.D. 10 and M.U.D. 6 Mud Recovery and Cuttings Cleaning System," undated.

9. McIntyre, J., Avanti Corporation, Telephone Communication Report on conversation with P. Matthews, Newpark Drilling Fluids, regarding "'Centrifugal Dryer' for Drill Cuttings," 5/29/98.

10. Henry, L., Chevron. Memorandum to C.A. Johnston, EPA. Response to EPA Request for Additional Input Parameter for EPA Modeling. 9/11/00. (Record No. IV.B.a.9)

11. Engineering News Record, "Construction Cost Index History (1908-1997)," website address http://www.enr.com/cost/costcci.htm, June 8, 1998.

12. U.S. Environmental Protection Agency, Development Document for Effluent Limitations Guidelines and New Source Performance Standards for the Offshore Subcategory of the Oil and Gas Extraction Point Source Category, Final, EPA 821-R-93-003, January 1993.

13. McIntyre, J., The Pechan-Avanti Group, Telecommunication Report on conversation with J. Candler, M-I Drilling Fluids, regarding "Cost Estimates for Proposed RPE Method," 10/16/98.

14. Annis, M.R., "Procedures for Sampling and Testing Cuttings Discharged While Drilling with Synthetic-Based Muds," prepared for the American Petroleum Institute (API) *ad hoc* Retention on Cuttings Work Group under the API Production Effluent Guidelines Task Force, August 19, 1998.

15. Kennedy, K., The Pechan-Avanti Group, Telecommunications Report on conversation with John Belsome, Seabulk Offshore Ltd., regarding "Offshore supply boat costs and specifications," June 3, 1998.

16. Kennedy, K., The Pechan-Avanti Group, Telecommunications Report on conversation with George Bano, Sea Mar Management, regarding "Offshore supply boat costs and specifications," 6/3/98.

17. Carriere, J. and E. Lee, Walk, Haydel and Associates, Inc., "Water-Based Drilling Fluids and Cuttings Disposal Study Update," Offshore Effluent Guidelines Comments Research Fund Administered by Liskow and Lewis, January 1989.

18. McIntyre, J., The Pechan-Avanti Group, Telecommunications Report on conversation with D. Stankey, McKittrick Solid Waste Disposal Facility, regarding "California Prices for Land Disposal of Drilling Wastes," October 16,1998.

19. Montgomery, R., The Pechan-Avanti Group, Telecommunication Report on conversation with S. Morgan, Ecology Control Incorporated, regarding "costs associated with land and water transport of drill cuttings and drilling fluids for offshore oil platforms operating off the California coast." 5/9/98.

20. U.S. Environmental Protection Agency, Development Document for Final Effluent Limitations Guidelines and Standards for the Coastal Subcategory of the Oil and Gas Extraction Point Source Category, EPA 821-R-96-023, October 1996.

21. McIntyre, J., SAIC, Telecon on conversation with Josh Stenson, Carlisle Trucking, regarding "Costs to Truck Wastes from Kenai, Alaska to Arlington, Oregon." 5/23/95.

22. Newpark Environmental Services, Facsimile of Price List, Effective May 1, 1998, from L.L. Denman to K. Kennedy. 5/26/98

23. U.S. Liquids of Louisiana, Facsimile of Price List, from "Betty" to Jamie McIntyre. 5/26/98.

24. Kennedy, K., The Pechan-Avanti Group, Telecommunications Report on conversation with personnel at Frances Torque Service, regarding "Cuttings box rental costs (Gulf of Mexico area)," 6/4/98.

25. Veil, J.A., Argonne National Laboratory, Washington, D.C., "Data Summary of Offshore Drilling Waste Disposal Practices," prepared for the U.S. Environmental Protection Agency, Engineering and Analysis Division, and the U.S. Department of Energy, Office of Fossil Energy, November 1998.

26. American Petroleum Institute, responses to EPA's "Technical Questions for Oil and Gas Exploration and Production Industry Representatives," attached to e-mail sent by Mike Parker, Exxon Company, U.S.A., to J. Daly, EPA. 8/7/98

27. Daly, J., U.S. EPA, Memorandum regarding "May 8-9, 1997, Meeting in Houston, Texas-Inception of Industry/Stakeholder Work Groups to Address Issues of Discharges Associated with Synthetic-Based Drilling Fluids (SBF)." 1/14/99.

28. Avanti. 2000. Memorandum to File, Assessment of Numbers of Wells Drilled per Structure in the Gulf of Mexico. 9/18/00. (Record No. IV.B.a.14)

29. The Pechan-Avanti Group, Worksheet regarding "Calculation of Daily Onsite Injection Cost. 10/30/98.

30. Candler, J., M-I Drilling Fluids. Email to C.A. Johnston RE: unit costs for various muds. 10/23/00. (Record No. IV.B.a.13)

31. Mahan, W., AOGCC. Email to C.A. Johnston, EPA, Re: two more questions concerning Cook Inlet disposal practices. 8/2/00. (Record No. IV.B.b.23)

32. Avanti Corporation. Memorandum to B. Vanatta, ERG. WBF Failure Rate Ancillary Cost Analysis. 12/27/00. (Record No. IV.C.B.3)

CHAPTER IX

NON-WATER QUALITY ENVIRONMENTAL IMPACTS AND OTHER FACTORS

1. INTRODUCTION

The elimination or reduction of one form of pollution has the potential to aggravate other environmental problems, an effect frequently referred to as cross-media impacts. Under sections 304(b) and 306 of the Clean Water Act, EPA is required to consider non-water quality environmental impacts in developing effluent limitations guidelines and new source performance standards. Accordingly, EPA evaluates the effect of these regulations on air pollution, energy consumption, solid waste generation and management, and consumptive water use. Safety, impacts of marine traffic, and other factors related to implementation are also considered. For these regulations, EPA also evaluates non-water quality environmental impacts on a geographic as well as an industry-wide basis.

2. SUMMARY OF NON-WATER QUALITY ENVIRONMENTAL IMPACTS

For the baseline and regulatory options developed for these regulations, EPA analyzes the costs and pollutant loadings/removals for water-based drilling fluids (WBF) and WBF cuttings, oil-based drilling fluid (OBF) cuttings, and synthetic-based drilling fluid (SBF) cuttings in the three geographic areas: the Gulf of Mexico, offshore California, and coastal Cook Inlet, Alaska (see Chapter VIII). Non-water quality environmental impacts (NWQEI) are estimated for the technologies that are the basis for the baseline and all regulatory options and geographic areas. The control technologies considered for drill cuttings treatment and disposal are 1) use of add-on solids control devices to reduce the amount of adhering SBF in the cuttings waste stream (for both discharge options); and 2) a combination of transportation of drill cuttings to shore for disposal and/or onsite grinding and subsurface injection for the zero discharge option. To assess incremental impacts of each option, baseline impacts of current solids control technologies and practices for WBF, OBF, and SBF are determined. The incremental reductions of NWQEI associated with the treatment and control of these wastes from existing sources and new sources are summarized in Table IX-1.

For both existing and new sources combined, EPA estimates air emissions to be reduced from baseline levels by a total of 3,579 tons per year under BAT/NSPS Option 1 and 3,483 under BAT/NSPS Option 2; under BAT/NSPS Option 3 (zero discharge) air emissions would increase by 2,389 tons per year. As compared to the zero discharge option (BAT/NSPS Option 3) air emissions are reduced by 5,968 tons per year under BAT Option 1 or 5,872 tons per year under BAT/NSPS Option 2. In addition, EPA projects that 37,519 BOE or 381,321 BOE less fuel are used under BAT/NSPS Options 1 or 2 than under BAT/NSPS Option 3 (zero discharge), respectively (see Table IX-1).

EPA assumed for the proposal and NODA analyses that SBFs replaced all OBF usage. The inclusion of WBF use into the analysis for the final rule is based on information provided by industry indicating that not all OBF wells are projected to convert to SBF. Furthermore, this information indicated that SBFs are used to replace WBFs in certain drilling situations and are even used to drill the entire well as opposed to just specific intervals.[1] Industry also has commented that drilling can occur faster using SBFs instead of WBFs, thereby reducing drilling time and associated fuel and air emissions.[1]

Other reductions in NWQEIs occur with the elimination of the long-term disposal of OBF-cuttings onshore because such disposal can adversely affect ambient air, soil, and groundwater quality. EPA estimates that allowing discharges under BAT/NSPS Options 1 and 2, respectively compared to BAT/NSPS Option 3 (zero discharge) would decrease the amount of cuttings disposed at land-based facilities by 37.4 million tons and 36.2 million tons per year; and the amount disposed by injection by 197 million tons and 190 million tons per year. The methodology used to arrive at these results is described in the sections that follow.

3. ENERGY REQUIREMENTS AND AIR EMISSIONS

EPA calculated energy requirements and air emissions for both BAT and NSPS regulatory levels of control. The assumptions and analyses presented in this section follow directly from the assumptions and data used in the compliance cost and pollutant loadings analyses presented in Chapter VIII.

In general, EPA estimated energy requirements by calculating the fuel consumption (in terms of fuel usage rate) of the equipment and activities associated with each of the regulatory options. Fuel usage rate is expressed as barrels of oil equivalents (BOE) because the fuel source for cuttings management can

TABLE IX-1
SUMMARY OF ANNUAL NWQEI FOR DRILL CUTTINGS [a]

Option	Increased Air Emissions (tons/yr)	Increased Fuel Usage (BOE/yr) [b]	Increased Solid Waste Disposed (MM pounds/yr) [c]
Existing Sources			
BAT/NSPS Option 1	(3,172)	(202,165)	(24,478,392)
BAT/NSPS Option 2	(3,073)	(195,124)	(16,900,727)
Zero Discharge	5,602	358,664	201,423,473
New Sources			
BAT/NSPS Option 1	136	(6,330)	(628,364)
BAT/NSPS Option 2	145	(5,693)	(109,746)
Zero Discharge	528	18,067	12,721,869
Total (Existing and New Sources)			
BAT/NSPS Option 1	(3,036)	(208,495)	(25,106,756)
BAT/NSPS Option 2	(2,928)	(200,817)	(17,010,473)
Zero Discharge	6,130	376,731	214,145,342

[a] The positive numbers in this table represent increased impacts as measured from the baseline, and the numbers in parentheses represent decreased impacts as measured from the baseline.
[b] BOE (barrels of oil equivalent) is the sum of the diesel (42 gal diesel = 1 BOE) and natural gas (1,000 scf = 0.178 BOE) estimated for each compliance option.
[c] Landfill and subsurface injection.

be either diesel oil or natural gas. BOE equates natural gas fuel usage with that of diesel by expressing both fuel types in terms of barrels of oil. EPA calculated diesel fuel usage by multiplying the time of equipment operation by the fuel consumption rate specific to the activity or equipment. For diesel, the conversion factor to BOE is 42 gallons = 1 BOE. The natural gas fuel usage was calculated byfirst determining the power requirement of the equipment (expressed in horsepower) and multiplying it by the natural gas usage rate (see Section 3.2.3 for details). For natural gas, the conversion factor to BOE is 1,000 standard cubic feet (scf) = 0.178 BOE.[2]

EPA estimated air emissions of operations associated with the baseline and each of the regulatory options and daily drilling rig operations by using emission factors relating the production of air pollutants to period of time that the equipment is operated and the amount of fuel consumed.

As in the cost analysis, energy requirements and air emissions are estimated using a step-wise methodology. First, impacts are determined for current baseline activities (see sections VIII.3.1.1 and VIII.3.2 for full discussions of baseline activities). Then compliance impacts are estimated from the activities associated with each of the regulatory options (two controlled discharge options and zero discharge). Finally, the incremental impacts for each of the options are calculated by subtracting the baseline impacts from the compliance impacts. Table IX-2 presents the results of each of these steps for both air emissions and fuel usage.

TABLE IX-2
SUMMARY OF BASELINE AND BAT/NSPS OPTIONS AIR EMISSIONS AND FUEL USAGE FOR EXISTING SOURCES

Option	Air Emissions (tons/yr)				Fuel Usage (BOE/yr)			
	Gulf of Mexico	Offshore CA	CI, Alaska	Total	Gulf of Mexico	Offshore CA	CI, Alaska	Total
Baseline Emissions and Fuel Usage								
SBF and WBF Wells	88,310	434	307	89,051	5,632,162	27,662	19,600	5,679,424
OBF Wells (Zero Discharge)	3,026	94	93	3,213	193,280	6,138	6,067	205,485
Total Baseline	91,336	528	400	92,264	5,825,442	33,800	25,667	5,884,909
BAT/NSPS Option Emissions and Fuel Usage								
BAT/NSPS Option 1	88,164	528	400	89,092	5,597,319	33,800	25,648	5,656,767
BAT/NSPS Option 2	88,262	528	401	89,191	5,604,102	33,800	25,667	5,663,569
BAT/NSPS Option 3	93,724	528	401	94,653	5,978,621	33,800	25,667	6,038,088
BAT/NSPS Incremental Compliance Emissions & Fuel Usage Increases (Reductions)								

Appendix IX-1 consists of the detailed worksheets that present the per-well energy requirements and air emissions calculations and are referred to throughout the following sections.

3.1 Water Based Drilling Fluids

EPA includes WBF wells in the NWQEI analyses for the final rule based on information submitted by industry that certain WBF wells are projected to convert to SBF and that SBFs are more efficient than WBFs. Wells drilled with SBFs have less washout (7.5% compared to 45% for WBF), decreasing the amount of waste generated and discharged and drilling rates using SBF are greater than for WBFs. Table IX-3 presents a summary of the NWQEI's for baseline and each option for SBFs, OBFs, and WBFs. Under the controlled discharge options, total air emissions and fuel usage decreases compared to baseline. Under these discharge scenarios, industry projects that some 39 Gulf of Mexico WBF wells will switch to SBFs due to the operational benefits of SBFs (in particular those related to improved directional drilling capabilities that reduces total footage drilled and/or well counts). EPA projects WBF usage, based on data provided by industry, will not change in either offshore California or Cook Inlet, Alaska; in addition, no offshore California wells are projected to use SBFs, even under a discharge option. Tables IV-3 and IV-4 summarize the well counts for the baseline and each regulatory option.

3.2 Energy Requirements

The following sections present the detailed assumptions, per-well data, and methodology used to calculate incremental energy requirements and fuel usage resulting from each regulatory option.

3.2.1 *Drilling Rig Activity*

One of the significant advantages of using SBFs is increased drilling rate. According to industry information, wells can be drilled twice as fast using SBFs as with WBFs.[1] The decreased drilling time results in fewer days to drill than necessary to support WBF drilling operations. In order to reflect this benefit of SBF usage, EPA included the effect less of daily rig activity into the NWQI calculations. Specifically, the daily fuel consumption rate and air emissions of a drilling rig and one helicopter trip per day per model well are included in the calculations for the baseline and each regulatory option. The average drilling rig fuel consumption rate is 650 gallons diesel per hour.[1] The average helicopter flight is two hours to the rig and two hours back to shore with a fuel consumption rate of 97 gallons diesel per hour.[1, 3]

TABLE IX-3
SUMMARY OF NWQEI BY DRILLING FLUID TYPE FOR BASELINE AND BAT/NSPS OPTIONS FOR EXISTING SOURCES

Technology Basis	SBF		OBF		WBF		Total	
	Air Emissions (tons/yr)	Fuel Usage (BOE/yr)	Air Emissions (tons/yr)	Fuel Usage (BOE/yr)	Air Emissions (tons/yr)	Fuel Usage (BOE/yr)	Air Emissions (tons/yr)	Fuel Usage (BOE/yr)
Baseline/Current Practice								
Discharge w/10.20% ROC [a]	11,420	728,340	NA	NA	77,631	4,951,084	89,051	5,679,424
Zero Discharge	0	0	3,213	205,485	0	0	3,213	205,485
Total Baseline	11,420	728,340	3,213	205,485	77,631	4,951,084	92,264	5,884,909
Technology Options								
BAT/NSPS Option 1	14,323	913,836	1,967	125,802	72,802	4,643,106	89,092	5,682,744
BAT/NSPS Option 2	14,422	920,877	1,967	125,802	72,802	4,643,106	89,191	5,689,785
BAT/NSPS Option 3	1,016	64,849	12,504	798,790	81,133	5,174,449	94,653	6,038,088

[a] ROC = retention on cuttings (by weight)

In order to assess SBF NWQEIs relative to total impacts from drilling operations, EPA included estimates of the daily drilling rig impacts from SBF-related activities. The additional impacts consist of fuel use and air emissions resulting from the various drilling rig pumps and motors as well as impacts of a daily helicopter trip for transporting personnel and/or supplies. Impacts were assessed for the number of days that an SBF interval is drilled versus the number of days well intervals are drilled using WBFs and OBFs and for the number of wells drilled using each of the drilling fluids.

3.2.2 *Baseline Energy Requirements*

Total baseline energy requirements are determined by summing the individual energy-consuming activities currently performed using each of the three drilling fluids on a well-type specific and per-day basis. These per-well, per-day values are multiplied by the number of wells in each geographic area and the number of days to drill each model well type (i.e, SWD, SWE, DWD, DWE). A summary of the baseline energy requirements is presented in Table IX-2 by geographic area.

The assumptions, data, and methods used to develop the daily per-well baseline zero discharge fuel usage rates are identical to those used in the zero discharge option compliance analysis. Therefore, this section presents an overview of the methodology in terms of the baseline analysis and section 3.1.3, "Zero Discharge Option Energy Requirements," presents the detailed line-item assumptions and data applicable to both baseline and zero discharge analyses.

In developing baseline energy requirements, EPA projects that the 201 SBF wells drilled annually in the Gulf of Mexico, using standard solids control equipment, will discharge SBF-cuttings at an average 10.20% retention of synthetic base fluid. Also, 857 WBF wells and 67 OBF wells are included in the baseline (all OBF wells currently practice zero discharge by either hauling waste to shore or by onsite injection).

Daily per-well baseline fuel usage rates for OBF wells in offshore California and coastal Cook Inlet derive from activities associated with transporting drill cuttings to shore or injecting the cuttings onsite. For this analysis, EPA applies methods developed to estimate zero discharge impacts for the offshore effluent limitations guidelines for offshore California wells[4] and under the coastal effluent limitations guidelines for coastal Cook Inlet wells.[5] Appendix IX-1 present the calculation of daily per-well fuel usage for baseline wells in offshore California and coastal Cook Inlet, respectively.

EPA uses the volumes of drilling waste requiring onshore disposal in offshore California to calculate the number of supply boat trips necessary to haul the waste to shore. Projections made regarding boat usage includes the types of boats used for waste transport; the distance traveled by the boats; allowances for maneuvering, idling and loading operations at the drill site; and in-port activities at the dock. EPA calculates fuel requirements for cranes operations at the drill site and in port based on projections of crane usage. EPA determines crane usage by considering the waste volumes to be handled and estimates of crane handling capacity. EPA also uses drilling waste volumes to determine the number of truck trips required. The number of truck trips, in conjunction with the distance traveled between the port and the disposal site, enables a calculation of fuel usage. The use of land-spreading equipment at the disposal site is based on the drilling waste volumes and the projected capacity of the equipment.

Based on these line-items, the per-well baseline fuel usage rates for offshore California are calculated as 1,987 BOE for a SWD OBF well and 4,152 BOE for a SWE OBF well. For coastal Cook Inlet, all zero discharge waste is injected onsite. The baseline fuel usage rate for a SWD OBF well is 1,960 BOE and 4,108 BOE for a SWE OBF well. For both regions, the SWD WBF per well fuel usage is 3,846 BOE and the SWE WBF fuel usage is 8,062 BOE. The total annual baseline fuel usage rates for these geographic areas (33,800 BOE for offshore California and 25,667 BOE for Cook Inlet) are calculated by multiplying the per-well rates for each fluid type by the corresponding numbers of baseline wells.

Daily per-well baseline fuel usage rates (and all other NWQEI analyses) for baseline OBF wells in the Gulf of Mexico are based on the estimate that 80% of these wells use land-disposal for zero discharge and the remaining 20% use onsite injection to dispose of OBF cuttings. In addition, EPA estimates 80% of the waste brought to shore is disposed via subsurface injection and 20% via landfilling. These projections were presented in Chapter VII, Section 5.4. As in the per-well zero discharge compliance cost analysis discussed in Section 4.4 of Chapter VIII, the per-well zero discharge environmental impacts for Gulf of Mexico wells are calculated as weighted averages reflecting these distributions of zero discharge compliance methods. For the OBF model wells in the baseline (SWD and SWE), per-well impacts are calculated both for transport and onshore disposal and for onsite injection. Then, for each model well, a weighted average per-well impact is calculated as follows:

Baseline GOM OBF Well Impact = (0.8 x [(0.8 per-well transportation & onshore injection impact) + (0.2 per-well transportation & landfilling impact)]) + (0.2 x per-well injection impact)

Per-well baseline fuel usage rates for land disposal in the Gulf of Mexico are calculated using the same line-items as described above for offshore California wells. Per-well baseline fuel usage rates for onsite injection are weighted averages of diesel usage rates and natural gas usage rates, according to the

estimate that 85% of wells use diesel and 15% use natural gas as primary power sources in the Gulf of Mexico.[6] Appendix IX-1 shows the detailed per-well calculations for baseline wells in the Gulf of Mexico. EPA calculates a per-well baseline fuel usage rate for each drilling fluid type. These per-well rates, multiplied by the corresponding numbers of baseline wells using each of the three drilling fluids and the number of days to drill each model well, result in a total annual baseline fuel usage of 5,825,442 BOE for Gulf of Mexico existing sources. The total baseline fuel usage rate of existing sources in all three geographic areas is 5,884,909 BOE per year (Table IX-2).

3.2.3 *Energy Requirements for BAT/NSPS Discharge Options*

Energy consumption for the discharge options is calculated by identifying the equipment and activities associated with the addition of a cuttings dryer to reduce the retention of the synthetic base fluid on drill cuttings from an average 10.20% to 4.03% for BAT/NSPS Option 1 and from 10.20% to 3.82% for BAT/NSPS Option 2, measured on a wet-weight basis.

BAT/NSPS Option 2 requires that fines generated from the fines removal unit are not to be discharged. The fines comprise approximately 3% of the total volume of waste generated from the solids control equipment. To determine the energy requirements for BAT/NSPS Option 2, the energy requirements for both the volume of waste discharged and the volume of waste hauled to shore or injected onsite is summed. The assumptions used for zero discharge of fines are the same as used under the zero discharge option and are detailed in Section 3.2.4 below. Because the cuttings dryer is added onto existing solids control equipment, the fuel consumption of the baseline technology was included in the calculation of each of the controlled discharge options. A summary of the total energy requirements for existing sources in the three geographic regions under each of the discharge options is presented in Table IX-2. The remainder of this section presents the calculations specific to each of the three geographic regions.

Per-well fuel usage rates are calculated for the four model well types in the Gulf of Mexico. As stated in Section 3.2.2, EPA estimates that 85% of Gulf of Mexico wells use diesel as their primary source of fuel, and 15% use natural gas.[6] Therefore, the per-well fuel usage rates for the Gulf of Mexico are weighted average per-well rates based on diesel usage and natural gas usage, respectively. These rates are identified in Appendix IX-1 worksheets as separate line-items for each model well. For example, the per-well diesel usage rate is calculated by multiplying the cuttings dryer operating time (equal to the number of active drilling days) by the consumption rate for diesel generators, estimated to be 6 gal/hr.[7] An example diesel usage calculation for a DWD model well under BAT/NSPS Option 1 follows.

BAT (add-on) equipment: (7.9 days) x (24 hr/day) x (6 gal/hr) = 1,137.6 gal diesel/well
Baseline (existing) equipment: (7.9 days) x (24 hr/day) x (6 gal/hr) = 1,137.6 gal diesel/well
Total diesel usage = 2,275.2 gal/well

(Note in this example, as well as for the next below, the BAT usage is added to baseline usage because BAT equipment is add-on technology, i.e., operating in addition to current practice, baseline technologies.)

The per-well natural gas usage rate is calculated for gas turbines using an average heating value of 1,050 Btu per standard cubic foot (scf) of natural gas and an average fuel consumption of 10,000 Btu per horsepower-hour (hp-hr), or 9.5 (10,000/1,050) scf/hp-hr.[8] Multiplying the turbine consumption rate by the power demand of the cuttings dryer (112.97 hp)[9] and the number of drilling days results in the per-well natural gas usage rate. An example natural gas usage calculation for a DWD model well under BAT Option 1 is:

BAT (add-on) equipment: (112.97 hp) x (7.9 days) x (24hrs/day) = 21,419 hp-hr
Baseline (existing) equipment: (67.5 hp) x (7.9 days) x (24hrs/day) = 12,798 hp-hr
Total natural gas usage = (21,419 hp-hr + 12,798 hp-hr) x (9.5 scf/hp-hr) = 325,062 scf

Under the BAT/NSPS options, EPA projects that there will not be any SBF wells drilled offshore California. Thus, the fuel usage for existing sources under BAT/NSPS Options 1 and 2 for this geographic region is attributed to the same WBF and OBF wells as for the baseline scenario.

One SBF SWD well, one OBF SWE well, three WBF SWD wells, and one WBF SWE well are projected for the discharge option fuel usage analysis for Cook Inlet, Alaska. Appendix IX-1 shows the per-well, and total BAT/NSPS option fuel usage for Cook Inlet existing sources.

3.2.4 *Energy Requirements for BAT/NSPS Option 3 Zero Discharge*

Energy consumption for compliance with the BAT/NSPS Option 3 zero discharge is calculated only for Gulf of Mexico wells that currently discharge SBF cuttings because wells in other areas are currently at zero discharge and will not contribute impacts under this option. Fuel usage rates are estimated by identifying the equipment and activities associated with the following zero discharge technologies currently in use in the Gulf of Mexico: 1) transporting waste cuttings to shore for disposal via subsurface injection or landfill; and 2) onsite injection. As stated in Section 3.2.2, EPA estimates that 80% of all Gulf of Mexico wells employing zero discharge technology use land disposal for waste cuttings, while 20% use onsite

injection. Of the waste brought to shore, 80% is injected onshore and 20% is disposed at a landfill.[10] Appendix IX-1 worksheets list the line-item activities associated with land disposal and onsite injection technologies and present the weighted average energy requirements based on this proportion of wells using the corresponding zero discharge technology.

The following sections present the detailed estimates and data used to develop the per-well zero discharge fuel requirements associated with these technologies. Although zero discharge for SBF wells is not determined for offshore California and Cook Inlet, Alaska, zero discharge of OBF wells for baseline and each of the regulatory options is estimated using information presented below.

3.2.4.1 *Transportation and Onshore Disposal Energy Requirements*

The per-well energy requirements associated with the transportation and onshore disposal of drill cuttings varies between model well types and geographic areas. Variations between model wells are due to differences in the per-well waste volumes calculated for each model well (see Table VII-4). The model well waste volumes determine the frequency of boat and truck trips required to transport the waste. Variations between geographic areas are due to differences in travel distances. For the proposed rule, some wells in Cook Inlet were assumed to haul and land dispose waste. However, for the final rule, all wells in Cook Inlet inject waste onsite. Below are the assumptions and data that constitute the line-items specific to the transportation and onshore disposal of cuttings in Appendix IX-1 worksheets:

- **Supply Boats:** Appendix VIII-1 presents the supply boat frequencies calculated for each model well. The frequency of supply boats needed to haul drill cuttings from the platform depends on the volume and rate of generation of the cuttings. The volume of waste generated varies not only on a per model well basis but also on a per regulatory option basis due to the changes in the number of wells requiring zero discharge. Under baseline in the Gulf of Mexico, 69 OBF wells zero discharge. Under the zero discharge option, 266 GOM wells would zero discharge, whereas under the discharge options only 41 wells would be zero discharging. Assuming 80% of GOM wells would haul, the number of supply boat trips under the discharge options would decrease, resulting in a 40% decrease in the amount of air pollutants and fuel used.

  Based on information compiled in the offshore guidelines Development Document, EPA uses a cuttings box capacity of 25 bbl for the Gulf of Mexico and offshore California areas.[7] These capacities determine the number of cuttings boxes to be filled, transferred to the supply boats, and hauled to shore per model well type and geographic area.

  Two types of supply boats provide service to the platform during drilling operations:

  1) *Dedicated supply boats* are rented to provide service for special tasks. In the NWQEI analysis, EPA estimates dedicated supply boats will provide service solely for offloading SBF or OBF cuttings. Dedicated supply boats are used for all model well types in all areas. The dedicated supply boat capacity in both the Gulf of Mexico and offshore California is 3,000 bbl (or 80 25-bbl

cuttings boxes).[11] Except for Gulf of Mexico deep water exploratory model wells, the waste generated from all other model wells in all geographic areas can be transported to shore with the use of only one dedicated supply boat.

2) *Regularly scheduled supply boats* are contracted at the beginning of drilling operations to arrive at the platform at regular intervals, bring supplies, and offload materials no longer needed. EPA estimates that regularly scheduled supply boats arrive at a drilling platform every four days.[7] For the purposes of the NWQEI analysis, EPA estimates that a regularly scheduled supply boat will be used only after the capacity of a dedicated supply boat (see below) is reached and additional cuttings still need to be hauled to shore. This is only required in the Gulf of Mexico for deep water exploratory model wells. The capacity of a regularly scheduled supply boat in the Gulf of Mexico is 300 bbl (or twelve 25-bbl cuttings boxes).[7]

Transit Fuel Consumption: Supply boats consume 130 gallons of diesel per hour while in transit.[12] Average supply boat speed is 11.5 miles per hour.[7] The distance the supply boat travels depends on whether the boat is a dedicated supply boat for which the entire travel distance is used in the analysis or if it is a regularly scheduled supply boat for which only the additional distance to travel to the disposal facility is used. The roundtrip distance is dependent on the geographic area as follows (also, see Appendix VIII-1):

> *Gulf of Mexico:* 277 miles for dedicated supply boats; 77 miles for regularly scheduled supply boats[7]
> *Offshore California:* 200 miles for dedicated supply boats[7]

Maneuvering Fuel Consumption: Supply boats maneuver at the platform for an average of one hour per visit.[13] The maneuvering fuel use factor is 15% of full throttle fuel consumption (169 gal/hr), or 25.3 gallons of diesel per hour.[13]

Loading Fuel Consumption: Due to ocean current and wave action, boats must maintain engines idling while unloading empty cuttings boxes and loading full boxes at the platforms. An additional 1.6 hours is included to account for potential delays in the transfer process.[4] For dedicated supply boats, it is estimated that the boats are available until either all of the waste is loaded or boat capacity is reached.

Auxiliary Electrical Generator: An auxiliary generator is needed for electrical power when propulsion engines are shut down. This only occurs when a supply boat is in port. The average in-port time for unloading drill cuttings, tank cleanout, and demurrage is 24 hours per supply boat trip.[7] Estimates of fuel requirements are based on the auxiliary generator rating at 120 horsepower (hp), operating at 50% load (or 60 hp), and consuming 6 gallons of diesel per hour.[7]

- **Barges:** Barges are used only in the Gulf of Mexico to haul waste from the transfer station to the disposal site. The average round-trip distance is 100 miles.[14] Barges consume fuel at a rate of 24 gallons of diesel per hour and travel an average of 6 miles per hour.[4]

- **Cranes:** Cranes used to unload empty cuttings boxes and load full cuttings boxes at the drill site and in port (or at the transfer station in the Gulf of Mexico) are diesel powered, require 170 horsepower operating at 80% load (or 136 hp), and consume 8.33 gallons of diesel per hour.[7] Cranes make 10 lifts per hour.[7] The total time to transfer the waste is dependent on the volume of drill cuttings as determined by the number of full/empty cuttings boxes to be transferred and varies for each model well type as follows:

Gulf of Mexico and Offshore California (cuttings box capacity = 25 bbl)
Deep Water Development: (37 boxes to unload & load at drill site)/(10 lifts/hr) = 3.7 hrs

Deep Water Exploratory: (77 boxes to unload & load at drill site)/(10 lifts/hr) = 7.7 hrs
Shallow Water Development: (56 boxes to unload & load at drill site)/(10 lifts/hr) = 5.6 hrs
Shallow Water Exploratory: (124 boxes to unload & load at drill site)/(10 lifts/hr) = 12.4 hrs

- **Trucks:** Trucks transport drill cuttings from port to the disposal site. For the Gulf of Mexico area, truck fuel usage is estimated to be 4 miles per gallon[5] and for California, 7 miles per gallon.[15] The truck capacity and distance traveled vary by geographic area as follows (see also Appendix VIII-1):

  Gulf of Mexico: capacity = 119 bbls[7]; distance = 20 miles[5]
  Offshore California: capacity = 50 bbls[16]; distance = 300 miles (Appendix VIII-1)

  The number of truck trips depends on the volume of drill cuttings hauled per model well and the capacity of the truck as listed above. Appendix VIII-1 presents in detail the number of truck trips per model well and geographic area.

- **Land Disposal Equipment:** Estimates regarding energy-consuming land disposal equipment are as follows:

  Wheel Tractor: Wheel tractors are used at disposal facilities for grading. One day (8 hours) of tractor operation is required to grade the drill cuttings waste volume from one well. The estimated fuel consumption rate for a wheel tractor is 1.67 gallons of diesel per hour.[7]

  Track-Type Dozer/Loader: A track-type dozer/loader is required at facilities for waste spreading. Two days (16 hours) of dozer operation are required to spread drill cuttings generated from one well. The estimated fuel consumption rate for a dozer is 22 gallons of diesel per hour.[7]

3.2.4.2 *Onsite and Onshore Grinding and Injection Energy Requirements*

According to information available to EPA, zero discharge via onsite grinding and injection is practiced by a growing number of operators in the Gulf of Mexico geographic area (see Section VII.5.5). In addition, a significant proportion of drilling waste hauled to shore is injected by commercial disposal companies. According to industry information, 80% of the waste brought to shore in the Gulf of Mexico and offshore California is injected and 20% is sent to landfills for disposal.[18] In Cook Inlet, Alaska, all waste is injected offshore at the drill site.[18] The waste volume of cuttings injected varies per model well type and was presented in Table VII-4. Following are the identified equipment and activities required for onsite or onshore injection and their corresponding power and fuel requirements.

- **Cuttings Transfer:** Cuttings transfer equipment used both offshore and onshore consists of one 100-hp vacuum pump.[10, 17] The time of operation needed for transfer is equal to the length of time required to drill the corresponding model well in hours. Drilling days were discussed in Section V.2.2.

- **Cuttings Grinding and Processing:** The equipment used for grinding and processing the drill cuttings offshore and onshore consist of: one 75 hp grinding pump, two 10 hp mixing pumps, two 10 hp vacuum pumps, and one 5 hp shale shaker motor.[17] The total power requirement is 120 hp. The time of operation for this equipment is equal to the length of time required to drill each of the model wells in hours.

- **Cuttings Injection:** One 600 hp injection pump rated at 2.5 barrels per minute is used for cuttings injection in offshore drilling operations.[17] In onshore injection facilities, one 1,225 hp injection pump rated at 20.8 barrels per minute is used.[10]

- **Fuel Requirements:** EPA calculates fuel requirements for both diesel and natural gas fuel sources according to the assumption that 85% of Gulf of Mexico wells use diesel and 15% use natural gas.[6] For diesel generators, the fuel usage rate for all of the grinding and injection equipment is 6 gallons of diesel/hour of operation for both offshore and onshore injection.[7, 10] For natural gas, the fuel requirements are calculated for gas turbines using an average heating value of 1,050 Btu per standard cubic foot (scf) of natural gas and an average fuel consumption of 10,000 Btu per horsepower-hour (hp-hr), or 9.5 (10,000/1,050) scf/hp-hr.[5]

3.3 Air Emissions

The total air emissions for each of the regulatory options as presented in Table IX-1 are calculated as the sum of the air emissions from each of the three geographic areas using the total system energy utilization rate (horsepower-hours or miles traveled) and emission factors developed for the various engines and fuels used. Table IX-2 presents the air emissions by geographic area for existing source wells. As for the offshore guidelines, EPA uses emissions factors for uncontrolled sources. The term “uncontrolled” refers to the emissions resulting from a source that does not utilize add-on control technologies to reduce the emissions of specific pollutants. The use of “uncontrolled” emission factors provides conservatively higher estimates of total emissions resulting from drill cuttings disposal. Table IX-4 presents the uncontrolled emission factors for the different diesel- and natural gas-driven engines used to calculate air emissions from activities related to the discharge, onshore disposal, or onsite injection of drill cuttings. For discharge options (BAT/NSPS 1 and 2), emission factors for either diesel generators or natural gas turbines are used to calculate emissions associated with the vibrating centrifuge. These emission factors also are used to calculate emissions associated with grinding and injection equipment. As mentioned above in Section 3.2.2, 85% of the Gulf of Mexico platforms utilize diesel as a fuel source and 15% utilize natural gas. This proportion is applied to all model well types in the Gulf of Mexico and in offshore California. EPA projects shallow water wells in coastal Cook Inlet to use natural gas exclusively (see Section 3.2.2). Detailed calculations of the air emissions from each type of engine used are presented in Appendix IX-1.

EPA calculates the baseline and total compliance air emissions for both the discharge and zero discharge options. The incremental air emissions for each of the options are determined by subtracting the corresponding total compliance air emissions from baseline air emissions (see Table IX-3).

TABLE IX-4
UNCONTROLLED EMISSION FACTORS FOR
DRILL CUTTINGS MANAGEMENT ACTIVITIES

Category	Emission Factors					
	Units	NOx	THC	SO2	CO	TSP
Supply Boats[a]						
Transit	lb/gal	0.3917	0.168	0.02848[b]	0.0783	0.033
Maneuvering	lb/gal	0.4196	0.226	0.02848[b]	0.0598	0.033
Loading/Unloading	lb/gal	0.4196	0.226	0.02848[b]	0.0598	0.033
Demurrage	g/bhp-hr	14	1.12	0.931	3.03	1
Barge Transit[a]	lb/gal	0.3917	0.168	0.02848	0.0783	0.033
Supply Boat Cranes[c]	g/bhp-hr	14	1.12	0.931	3.03	1
Barge Cranes[c]	g/bhp-hr	14	1.12	0.931	3.03	1
Trucks[d]	g/mile	11.23	2.49	NA	8.53	NA
Wheel Tractor[e]	lb/hr	1.269	0.188	0.09	3.59	0.136
Dozer/Loader[e]	lb/hr	0.827	0.098	0.076	0.201	0.058
Diesel Generator[f]	g/bhp-hr	14	1.12	0.931	3.03	1
Natural Gas Fired Turbines[g]	g/bhp-hr	1.3	0.18	0.002[h]	0.83	NA

a Source: Table II-3.3, AP-42 Volume II, September 1985.[19]
b Based on assumed 0.20% sulfur content of fuel and fuel density of 7.12 lbs/gal (AP-42 Volume II, September 1985).[19]
c Source: Table 3.3-1, AP-42 Volume I, Supplement F, July 1993.[20] Note: bhp is brake horsepower.
d Source: Table 1.7.1, AP-42 Volume II, September 1985.[19]
e Source: Table II-7.1, AP-42 Volume II, September 1985.[19]
f Source: Table 3.2-1, AP-42 Volume I, Supplement F, July 1993.[20]
g Source: Table 3.3-1, AP-42 Volume I, January 1975.[21] Note: bhp is brake horsepower.
h This factor depends on the sulfur content of the fuel used. For natural gas fired turbines, AP-42, 1976 (Table 3.2-1) gives this emission factor based on assumed sulfur content of pipeline gas of 2,000 g/10^6 scf (AP-42 Vol. I, April 1976).[8]
NA = Not Applicable

3.4 New Source Energy Requirements and Air Emissions

As described in Chapter IV, Section 3, EPA projects 20 new source SBF wells will be drilled annually in the Gulf of Mexico under the baseline, consisting of 15 DWD wells and five SWD wells. Under baseline, EPA also projects 38 WBF wells to be drilled (27 SWD and 11 DWD) and 2 SWD wells drilled in the Gulf of Mexico. Under both BAT/NSPS discharge options, 24 new source SBF wells are projected,

with one OBF well and three WBF wells converting to SBF. No new source wells are projected for offshore California and coastal Cook Inlet because of the lack of activity in new lease blocks in these areas.

Table IX-5 summarizes the energy requirements (i.e., fuel usage) and air emissions for new source wells in the Gulf of Mexico under the baseline and BAT/NSPS Options 1 and 2. The methods used to calculate per-well impacts for new source wells are the same as for existing sources, described above in Sections 3.2 and 3.3. The per-well impacts are multiplied by the corresponding number of wells using each of the three drilling fluid types and summed for each of the options. Appendix VIII-2 includes three worksheets that present the baseline impacts, the discharge option impacts, and the zero discharge option impacts for new source wells. The incremental compliance impacts are calculated by subtracting compliance impacts from the baseline impacts.

4. SOLID WASTE GENERATION

EPA received information that some operators use SBFs to drill an entire well (i.e., not just difficult well intervals). These operators stated that SBFs facilitate faster, more efficient well drilling and therefore, they have replaced WBFs with SBFs for drilling. EPA calculates the amount of waste cuttings that would be land disposed, injected onshore, and/or injected onsite in each regulatory scenario, and determined there would be a considerable reduction in the amount of drill cuttings land disposed and injected with the implementation of a controlled discharge option.

Table IX-6 summarizes the total amounts of solid waste disposed by onshore disposal and onsite injection for existing and new sources. Table VII-4 presented the model well data on which these solid waste amounts are based. For each model well, the total waste generated (in pounds) is multiplied by the number of wells affected for the corresponding option, base fluid type, and geographic area for the baseline and regulatory options. EPA then calculates incremental compliance levels by subtracting the baseline solid waste values from BAT/NSPS Options 1 and 2 values. For BAT/NSPS 3, the positive incremental values indicate an increase in the amount of waste disposed by zero-discharge technologies as compared to the baseline. Likewise, under the control options, the negative (parenthetical) incremental values indicate a reduction in the amount of waste requiring subsurface injection or land-based disposal.

TABLE IX-5
SUMMARY AIR EMISSIONS AND FUEL USAGE FOR GULF OF MEXICO NEW SOURCES

Baseline and Control Option	Air Emissions (tons/yr)	Fuel Usage (BOE/yr)
Baseline Emissions		
Discharge w/ 10.2% retention of SBF cuttings	3,239	221,553
Zero Discharge (current OBF wells only)	64	4,122
Total Baseline	3,303	225,675
Total Emissions and Fuel Usage		
BAT/NSPS Option 1	3,439	219,345
BAT/NSPS Option 2	3,448	219,982
BAT/NSPS Option 3 (Zero discharge)	3,767	239,620
Incremental Increase (Reduction) in Emissions and Fuel Usage		
BAT/NSPS Option 1	136	(6,330)
BAT/NSPS Option 2	145	(5,693)
BAT/NSPS Option 3 (Zero discharge)	528	18,067

EPA's analyses show that compared to baseline, under the BAT/NSPS Option 3 (zero discharge) for offshore existing sources, cuttings annually shipped to shore for disposal in non-hazardous oilfield waste (NOW) sites increase of over 35 million pounds and increase over 166 million pounds for cuttings annually injected. BAT/NSPS Option 3 leads to increased annual fuel usage of 358,664 BOE and an increase in annual air emissions of 5,602 tons. Finally, BAT/NSPS Option 3 is projected to increase discharged WBF-cuttings by 51 million pounds resulting from Gulf of Mexico operators switching from more efficient SBF to less efficient WBF drilling.

TABLE IX-6
AMOUNTS AND INCREMENTAL INCREASES (DECREASES) OF SOLID WASTE DISPOSED BY ZERO DISCHARGE TECHNOLOGIES FOR EXISTING AND NEW SOURCE WELLS
(pounds per year)

Option	Gulf of Mexico		Offshore California		Cook Inlet, AK	Totals		
	Onshore Land Disposal	Injection (Onshore& Offshore)	Onshore Land Disposal	Injection (Onshore& Offshore)	Injection (Offshore Only)	Onshore Land Disposal	Injection	Total
Existing Sources								
Baseline	9,489,742	49,821,146	0	1,945,148	1,945,148	9,489,742	53,711,443	63,201,185
BAT Option 1	5,673,738	29,787,123	0	1,945,148	1,316,784	5,673,738	33,049,055	38,722,793
BAT Option 2	7,186,051	35,836,375	0	1,945,148	1,332,884	7,186,051	39,114,407	46,300,458
BAT Option 3	44,926,625	215,807,737	0	1,945,148	1,945,148	44,926,625	219,698,033	264,624,658
Incremental BAT 1	(3,816,004)	(20,034,024)	0	0	(628,364)	(3,816,004)	(20,662,388)	(24,478,392)
Incremental BAT 2	(2,303,691)	(13,984,772)	0	0	(612,264)	(2,303,691)	(14,597,036)	(16,900,727)
Incremental BAT 3	35,436,883	165,986,590	0	0	0	35,436,883	165,986,590	201,423,473
New Sources								
Baseline	251,346	1,005,382	0	0	0	251,346	1005,382	1,256,728
BAT Option 1	125,673	502,691	0	0	0	125,673	502,691	628,364
BAT Option 2	229,396	917,586	0	0	0	229,396	917,586	1,146,982
BAT Option 3	3,634,435	11,223,871	0	0	0	3,634,435	11,223,871	14,858,306
Incremental BAT 1	(125,673)	(502,691)	0	0	0	(125,673)	(502,691)	(628,364)
Incremental BAT 2	(21,949)	(87,797)	0	0	0	(21,949)	(87,797)	(109,746)
Incremental BAT 3	3,383,090	10,218,489	0	0	0	3,383,090	10,218,489	13,601,578

Additionally, EPA's analyses show that under BAT/NSPS Option 3 (zero discharge) as compared to baseline, Gulf of Mexico new source cuttings annually shipped to shore for disposal in NOW sites increase over 3.4 million pounds and increase over 10.2 million pounds for cuttings annually injected. BAT/NSPS Option 3 leads to an increase in annual fuel use of 18,067 BOE and an increase in annual air emissions of 528 tons. Finally, BAT/NSPS Option 3 in the Gulf of Mexico is projected to increase WBF-cuttings being discharged to offshore waters by 7.5 million pounds. Again, this pollutant loading increase is a result of Gulf of Mexico operators using less efficient WBF for drilling instead of SBF.

5. CONSUMPTIVE WATER USE

Neither of the two regulatory options is projected to affect consumptive water use.

6. OTHER FACTORS

6.1 Impact of Marine Traffic

EPA estimates the changes in vessel traffic that would result from the implementation of the control options using the same methodology as the energy consumption and air emissions impacts analyses described above. Appendix VIII-1 presents the source data and calculations for the per-well estimate of boat trips required for compliance.

To comply with BAT/NSPS Option 3 (zero discharge), EPA estimates that 14 existing and new source SBF wells in the Gulf of Mexico will implement zero discharge technologies. Based on the assumption that 80% of these wells would transport waste drill cuttings to shore and each model well requires one dedicated supply boat, except for DWE wells which require two dedicated supply boats, an estimated total of 231 boat trips per year would be required. No additional boat trips would be required in offshore California and coastal Cook Inlet because these geographic areas are currently at zero discharge of SBF-cuttings.

Under NSPS/BAT Options 1 and 2, 27 Gulf of Mexico OBF wells would convert to SBF usage, thereby eliminating the need for hauling OBF cuttings to shore. Baseline supply boat trips are estimated as 55 trips per year for the 69 wells in the Gulf of Mexico where 55 wells transport drill cuttings to shore and the other 14 inject onsite. Compared to the zero discharge option (BAT/NSPS Option 3) which led to 176 additional boat trips per year in the Gulf of Mexico, the discharge options reduce boat traffic in the Gulf of

Mexico by 22 boat trips per year. As cited in the offshore Development Document, 10% of the total Gulf of Mexico commercial vessel traffic, or approximately 25,000 vessels, service oil and gas operations. Therefore, compared to baseline, the discharge options decrease commercial boat traffic by 0.01% in the Gulf of Mexico.

6.2 Safety

EPA also considers the impact of the effluent limitations guidelines and standards on safety. EPA has identified two safety issues related to drilling fluids: (1) deleterious vapors generated by organic materials in drilling fluids; and (2) waste hauling activities that increase the risk of injury to workers.

One of the key concerns in exploration and production projects is the exposure of wellsite personnel to vapors generated by organic materials in drilling fluids.[22] Areas on the drilling location with the highest exposure potentials are sites near solids control and open pits. These areas are often enclosed in rooms and ventilated to prevent unhealthy levels of vapors from accumulating. If the total volume of organic vapors can be reduced, then any potential health effects will also be reduced regardless of the nature of the vapors.

Generally speaking, the aromatic fraction of the vapors is the most toxic to the mammalian system. The high volatility and absorbability through the lungs combined with their high lipid solubility serve to increase their toxicity. Diesel OBFs have a high aromatic content and vapors generated from using these drilling fluids include aromatics (e.g., alkybenzenes, naphthalenes, and alkyl-naphthalenes), alkanes (e.g., C_7-C_{18} straight chained and branched), and alkenes. Some minerals oils (other than low aromatic content mineral oils, often referred to as “low toxicity mineral oil”), also generate vapors that contain the same types of chemical compounds, but generally at lower concentrations, as those found in the diesel vapors (e.g, aromatics, alkanes, cyclic alkanes, and alkenes). Because SBFs are manufactured from compounds with specifically defined compositions, the subsequent compound can exclude toxic aromatics. Consequently, toxic aromatics can be excluded from the vapors generated by using SBFs.

In general, SBFs (e.g., esters, LAOs, PAOs, IOs) generate much lower concentrations of vapors than do OBFs.[22] Moreover, the vapors generated by these SBFs are less toxic than traditional OBFs because they do not contain aromatics.

Industry has commented in previous effluent guidelines, such as the coastal subcategory rulemaking, that a zero discharge requirement would increase the risk of injury to workers due to increased

waste hauling activities. These activities include vessel trips to and from the drilling platform to haul waste, transfer of waste from the platform onto a service vessel, and transfer in port onto a barge or dock.

EPA has identified and reviewed additional data sources to determine the likelihood that imposition of a zero discharge limitation on cuttings contaminated with SBF could increase risk of injury due to additional waste hauling demands. The sources of safety data are the U.S. Coast Guard (USCG), the Minerals Management Service (MMS), the American Petroleum Institute (API), and the Offshore Marine Service Association (OMSA). The following is a summary of the findings from this review.

The data indicate there are reported incidents associated with the collection, hauling, and onshore disposal of wastes from offshore. However, the data do not distinguish whether any of these incidents can be attributed to specific waste management activities.

Most offshore incidents are due to human error or equipment failure. The rate at which these incidents occur will not be changed significantly by increased waste management activities. However, if the number of man hours and/or equipment hours are increased, there will be more reportable incidents given an unchanged incident rate. These potential increases may be offset by reduced incident rates through increased training or equipment maintenance and inspection; but these changes cannot be predicted. One indication that training and maintenance can reduce incident rates is a 1998 API report entitled "1997 Summary of U.S. Occupational Injuries, Illnesses, and Fatalities in the Petroleum Industry," which established that injury incident rates have been decreasing over the last 14 years. If this decrease continues, there should be no increase in the number of safety incidents due to a requirement to haul SBF-contaminated cuttings to shore for disposal.

7. AIR EMISSIONS MONETIZED HUMAN HEALTH BENEFITS

EPA estimated air emissions associated with each of the regulatory options as described above in sections 3.3 and 3.4. The pollutants considered in the NWQI analyses are nitrogen oxides (NO_x), volatile organic carbon (VOC), particulate matter (PM), sulfur dioxide (SO_2), and carbon monoxide (CO). Of these pollutants, EPA monetized the human health benefits or impacts associated with VOC, PM, and SO_2 emissions using the methodology presented in the *Environmental Assessment of the Final Effluent Limitations Guidelines and Standards for the Pharmaceutical Manufacturing Industry* (EPA-821-B-98-008). Each of these pollutants have human health impacts and reducing these emissions can reduce these impacts.

Several VOCs exhibit carcinogenic and systemic effects and VOCs, in general, are precursors to ground-level ozone, which negatively affects human health and the environment. PM impacts include aggravation of respiratory and cardiovascular disease and altered respiratory tract defense mechanisms. SO_2 impacts include nasal irritation and breathing difficulties in humans and acid deposition in aquatic and terrestrial ecosystems.

The unit values (in 1990 dollars) are $489 to $2,212 per megagram (Mg) of VOC; $10,823 per Mg of PM; and $3,516 to $4,194 per Mg of SO_2. Using the Engineering News Record Construction Cost Index (see www.enr.com/cost/costcci.asp) these conversion factors are scaled up using the ratio of 6060:4732 (1999$:1990$). EPA does not expect the alternate higher ROC limitation and standard for drilling fluids with the stock base fluid performance of esters to affect monetized benefits because equipment used under the ester option (*e.g.*, shale shakers, cuttings dryer, fines removal unit) has the same or similar air emissions. Following is a summary of the monetized benefits for each of the regulatory options for both existing and new sources.

TABLE IX-7
SUMMARY OF MONETIZED HUMAN HEALTH BENEFITS OR IMPACTS ASSOCIATED WITH VOC, PM, AND SO_2 EMISSIONS, EXISTING SOURCES (1999$/YR)

	Criteria Air Pollutant		
	VOC	**PM**	**SO_2**
Baseline/Current Practice Air Emissions, Mg/yr:			
Discharge with 10.2% retention of SBF on cuttings	23,635	3,460	3,006
Zero Discharge (current OBF wells only)	847	126	109
Total Baseline Air Emissions, Mg/yr	24,482	3,586	3,115
Compliance Air Emissions, Mg/yr:			
(1) Discharge with 4.03% retention of SBF on cuttings	21,960	3,222	2,799
(2) Discharge with 3.82% retention of SBF on cuttings	21,980	3,226	2,803
(3) Zero Discharge [a]	24,919	3,654	3,175
Incremental Compliance Emission Reductions (Increases), Mg/yr:			
(1) Discharge with 4.03% retention of SBF on cuttings	2,522	364	316
(2) Discharge with 3.82% retention of SBF on cuttings	2,502	360	312
(3) Zero Discharge [a]	(437)	(68)	(59)
Unit Value of Poll. Reductions, 1990$/Mg: [b]	489 to 2,212	10,823	3,516 to 4,194
Unit Value of Poll. Reductions, 1999$/Mg: [c]	626 to 2,833	13,860	4,503 to 5,371
Incremental Compliance Benefits (Costs), 1998$/yr:			
(1) Discharge with 4.03% retention of SBF on cuttings	1,579,429 to 7,144,576	5,049,778	1,423,174 to 1,697,608
(2) Discharge with 3.82% retention of SBF on cuttings	1,566,817 to 7,087,524	4,991,937	1,406,834 to 1,678,118
(3) Zero Discharge [a]	(273,777) to (1,238,434)	(948,091)	(267,560) to (319,154)

[a] Via land disposal or on-site offshore injection
[b] Conversion factors from *Environmental Assessment of the Final Effluent Limitations Guidelines and Standards for the Pharmaceutical Manufacturing Industry* (EPA-821-B-98-008)
[c] Scaled from 1990$ using the Engineering News Record Construction Cost Index

TABLE IX-8
SUMMARY OF MONETIZED HUMAN HEALTH BENEFITS OR IMPACTS ASSOCIATED WITH VOC, PM, AND SO_2 EMISSIONS, NEW SOURCES (1999$/YR)

	Criteria Air Pollutant		
	VOC	**PM**	**SO_2**
Baseline/Current Industry Practice Air Emissions, Mg/yr: Discharge with 10.2% retention of SBF on cuttings	589	86	75
Compliance Air Emissions, Mg/yr:			
(1) Discharge with 4.03% retention of SBF on cuttings	813	119	104
(2) Discharge with 3.82% retention of SBF on cuttings	913	134	117
(3) Zero Discharge [a]	998	146	127
Incremental Compliance Emission Reductions (Increases), Mg/yr:			
(1) Discharge with 4.03% retention of SBF on cuttings	(224)	(33)	(29)
(2) Discharge with 3.82% retention of SBF on cuttings	(323)	(48)	(41)
(3) Zero Discharge [a]	(409)	(60)	(52)
Unit Value of Poll. Reductions, 1990$/Mg: [b]	489 to 2,212	10,823	3,516 to 4,194
Unit Value of Poll. Reductions, 1999$/Mg: [c]	626 to 2,833	13,860	4,503 to 5,371
Incremental Compliance Benefits (Costs), 1998$/yr:			
(1) Discharge with 4.03% retention of SBF on cuttings	(140,269) to (634,508)	(453,927)	(128,265) to (152,999)
(2) Discharge with 3.82% retention of SBF on cuttings	(202,421) to (915,655)	(658,885)	(186,271) to (222,190)
(3) Zero Discharge [a]	(256,052) to (1,158,253)	(831,151)	(234,472) to (279,686)

[a] Via land disposal or on-site offshore injection
[b] Conversion factors from *Environmental Assessment of the Final Effluent Limitations Guidelines and Standards for the Pharmaceutical Manufacturing Industry* (EPA-821-B-98-008)
[c] Scaled from 1990$ using the Engineering News Record Construction Cost Index

7. REFERENCES

1. Van Slyke, Don, Unocal. Unocal Comments; Effluent Limitations Guidelines for the Oil and Gas Extraction Point Source Category; Proposed Ruling (40 CFR 435). 6/9/00. (Record No. IV.A.a.3)

2. Mason, T., Avanti Corporation, Memorandum regarding "Conversion Factor to BOE (Barrels of Oil Equivalents) for Natural Gas and Diesel Fuel." 7/12/96. (Record No. I.C.d.44)

3. AP-42: Compilation of Air Pollutant Emissions Factors, Volume II: Mobile Sources (AP-42), pending 5th edition. Last updated: 06 April 1998

4. U.S. Environmental Protection Agency, Development Document for Effluent Limitations Guidelines and New Source Performance Standards for the Offshore Subcategory of the Oil and Gas Extraction Point Source Category, Final, EPA 821-R-93-003, January 1993.

5. U.S. Environmental Protection Agency, Development Document for Final Effluent Limitations Guidelines and Standards for the Coastal Subcategory of the Oil and Gas Extraction Point Source Category, EPA 821-R-96-023, October 1996.

6. Daly, J., U.S. EPA, Memorandum regarding "Market Share of Respondents to Technical Questions, August 17, 1998.

7. Carriere, J. and E. Lee, Walk, Haydel and Associates, Inc., "Water-Based Drilling Fluids and Cuttings Disposal Study Update," Offshore Effluent Guidelines Comments Research Fund Administered by Liskow and Lewis, January 1989.

8. U.S. EPA, "Compilation of Air Pollutant Emission Factors," AP-42, Volume I, April 1976.

9. McIntyre, J., Avanti Corporation, Memorandum to J. Daly, U.S. EPA, regarding "Summary of December 2 Meeting with David Wood of Mud Recovery Systems," December 18, 1997.

10. Johnston, C.A., EPA. Memorandum to File, On-shore Formation Injection Disposal Non-Water Quality Environmental Impact Input Parameters. 6/20/00. (Record No. D.2)

11. Kennedy, K., The Pechan-Avanti Group, Telecommunications Report on conversation with J. Belsome, Seabulk Offshore Ltd., regarding "Offshore supply boat costs and specifications," 6/3/98.

12. U.S. EPA, "Trip Report to Campbell Wells Landfarms and Transfer Stations in Louisiana," 6/30/92. (Record No. C.d.60)

13. Jacobs Engineering Group, "Air Quality Impact of Proposed Lease Sale No. 95," prepared for U.S. Department of the Interior, Minerals Management Service, June 1989. (Record I.C.d.46)

14. Sunda, J., SAIC, Memorandum to A. Wiedeman, U.S. EPA, regarding "The assumptions used in the development of the cost of commercial disposal of produced water using barge transportation," 3/10/94. (Record I.C.d.47)

15. Montgomery, R., The Pechan-Avanti Group, Telecommunication Report on conversation with S. Morgan, Ecology Control Inc., regarding "costs associated with land and water transport of drill cuttings and drilling fluids for offshore oil platforms operating off the California coast," 5/9/98. (Record No. I.C.d.25)

16. McIntyre, J., The Pechan-Avanti Group, Telecommunications Report on conversation with D. Stankey, McKittrick Solid Waste Disposal Facility, regarding "California Prices for Land Disposal of Drilling Wastes," 10/16/98. (Record No. I.C.d.23)

17. Kennedy, K., The Pechan-Avanti Group, Telecommunications Report on conversation with personnel at Apollo Services regarding "Detailed Information Regarding Apollo's Cuttings Injection System," 7/9/98. (Record No. I.C.d.48)

18. Johnston memo to file: "Update on Several Model Input Parameters for Offshore Injection and Land Disposal (Injection and Landfarming) Operations for Zero Discharged SBF Wastes. 8/14/00.

19. U.S. EPA, “Compilation of Air Pollutant Emission Factors,” AP-42, Volume II, September 1985. (Record No. I.C.d.49)

20. U.S. EPA, “Compilation of Air Pollutant Emission Factors,” AP-42, Volume I, Supplement F, July 1993. (Record No. I.C.d.50)

21. U.S. EPA, “Compilation of Air Pollutant Emission Factors,” AP-42, Volume I, January 1975. (Record No. I.C.d.51)

22. Candler, J., M. Churan and L. Conn. 1995. Laboratory and Field Measurements of Vapors Generated by Organic Materials in Drilling Fluids. SPE 35866. (Record No. III.D.12)

CHAPTER X

OPTIONS SELECTION RATIONALE

1. INTRODUCTION

This chapter presents the options EPA has selected for control of the SBF and SBF-cuttings waste streams. A discussion of the rationale for selection of these options also is included.

2. REGULATORY OPTIONS CONSIDERED FOR SBFs NOT ASSOCIATED WITH DRILL CUTTINGS

EPA is promulgating, under BPT, BCT, BAT, and NSPS, zero discharge for SBFs not associated with drill cuttings. This option is technically available and economically achievable. In the February 1999 proposal, EPA proposed BPT, BCT, BAT, and NSPS as zero discharge for SBFs not associated with drill cuttings. In the April 2000 NODA, EPA published two options for the final rule for the BAT limitation and NSPS for controlling SBFs not associated with SBF drill cuttings: (1) zero discharge; or (2) allowing operators to choose either zero discharge or an alternative set of BMPs with an accompanying compliance method. Industry supported the second option stating that the first option (zero discharge) would result in the costly and potentially dangerous collection, shipping, and disposal of large quantities of rig site wash water containing only a small quantity of SBF.[1] Industry also stated that BMPs would be extremely effective at reducing the quantity of non-cuttings related SBF and would focus operators' attention on reducing these discharges.

EPA is promulgating BPT, BCT, BAT, and NSPS of zero discharge for SBFs not associated with drill cuttings. This waste stream consists of neat SBFs that are intended for use in the downhole drilling operations (e.g., drill bit lubrication and cooling, hole stability). Drilling fluids are transferred from supply boats to the drilling rig and can be released during these transfer operations. This waste stream is often spilled on the drill deck but contained through grated troughs, vacuums, or squeegee systems. This waste stream is also held in numerous tanks during all phases of the drilling operation (e.g., trip tanks, storage tanks). EPA received information that rare occurrences of improper SBF transfer procedures (e.g., no bunkering procedures in place for rig loading manifolds) and improper operation of active mud system equipment (e.g., no lock-out, tag-out procedures in place for mud pit dump valves) has the potential for the

discharge of tens to hundreds of barrels of neat SBF, or SBF not associated with cuttings, if containment is not practiced.[2]

Current practice for control of SBF not associated with drill cuttings is zero discharge (e.g., drill deck containment, bunkering procedures), primarily due to the value of SBFs recovered and reused. Therefore, zero discharge for SBF not associated with drill cuttings is technologically available and economically achievable. Moreover, these controls generally allow the re-use of SBF in the drilling operation and have no unacceptable NWQIs.

EPA has also decided that solids accumulated at the end of the well ("accumulated solids") and wash water used to clean out accumulated solids or used on the drill floor are associated with drill cuttings and are therefore not controlled by the zero discharge requirement for SBFs not associated with drill cuttings.

3. REGULATORY OPTIONS CONSIDERED FOR SBFs ASSOCIATED WITH DRILL CUTTINGS

3.1 BPT Technology Options Considered and Selected

EPA is promulgating BPT effluent limitations for the cuttings contaminated with SBFs ("SBF-cuttings"). The BPT effluent limitations promulgated for SBF-cuttings would control free oil as a conventional pollutant. The BPT limitation is no free oil as measured by the static sheen test, performed on SBF separated from the cuttings in offshore waters and coastal Cook Inlet, Alaska.

In setting the no free oil limitation in offshore waters and coastal Cook Inlet, Alaska, EPA considered the sheen characteristics of currently available SBFs. Because this requirement is currently met by dischargers in the Gulf of Mexico, EPA anticipates no additional costs to the industry to comply with this limitation. Therefore, EPA believes that this limitation represents the appropriate BPT level of control for SBFs associated with drill cuttings. At the time of the Offshore rulemaking when this was an issue, industry re-formulated SBFs to comply with this limitation and thus EPA is retaining this limitation to ensure that SBF-cuttings discharges do not create sheens.

3.2 BCT Technology Options Considered and Selected

In July 1986, EPA promulgated a methodology for establishing BCT effluent limitations. EPA evaluates the reasonableness of BCT candidate technologies -- those that are technologically feasible -- by applying a two-part cost test: (1) a POTW test; and (2) an industry cost-effectiveness test.

EPA first calculates the cost per pound of conventional pollutant removed by industrial dischargers in upgrading from BPT to a BCT candidate technology and then compares this cost to the cost per pound of conventional pollutants removed in upgrading POTWs from secondary treatment. The upgrade cost to industry must be less than the POTW benchmark of $0.25 per pound (in 1976 dollars). In the industry cost-effectiveness test, the ratio of the incremental BPT to BCT cost divided by the BPT cost for the industry must be less than 1.29 (i.e., the cost increase must be less than 29%).

The BCT effluent limitations will control free oil as a conventional pollutant. EPA is promulgating a BCT effluent limitation for SBF-cuttings of no free oil equivalent to the BPT limitation for SBF-cuttings of no free oil as determined by the static sheen test in offshore waters and coastal Cook Inlet, Alaska. Because the BCT limitation is equivalent to the BPT limitations it has no incremental cost and thus passes the BCT cost tests.

In developing BCT limits for the offshore waters and coastal Cook Inlet, Alaska, EPA considered whether there are technologies (including drilling fluid formulations) that achieve greater removals of conventional pollutants than promulgated for BPT, and whether those technologies are cost-reasonable according to the BCT cost test. EPA identified no technologies that can achieve greater removals of conventional pollutants as compared with the offshore waters and coastal Cook Inlet BPT requirements that are also cost-reasonable under the BCT cost test. Accordingly EPA is promulgating BCT effluent limitations for SBF-cuttings equal to the promulgated BPT effluent limitations for SBF-cuttings in offshore waters and coastal Cook Inlet, Alaska.

3.3 BAT Technology Options Considered And Selected

3.3.1 Overview

EPA is promulgating stock limitations and discharge limitations in a two-part approach to control SBF-cuttings discharges under BAT. The first part is based on product substitution through use of stock limitations (e.g., sediment toxicity, biodegradation, PAH content, metals content) and discharge limitations

(e.g., diesel oil prohibition, formation oil prohibition, sediment toxicity, aqueous toxicity). The second part is the control of the quantity of SBF discharged with SBF-cuttings. As previously stated in the April 2000 NODA, EPA finds that the second part is particularly important because limiting the amount of SBF content in discharged cuttings controls: (1) the amount of SBF discharged to the ocean; (2) the biodegradation rate of discharged SBF; and (3) the potential for SBF-cuttings to develop cuttings piles and mats that are detrimental to the benthic environment. While the primary technology basis for the limitations and standards is product substitution and enhanced solids control technology, EPA also believes that in the rare instances where a discharger could not comply with the limitations or standards, the discharger could meet zero discharge by re-injection or land disposal. [Note: In the Offshore Guidelines, 58 FR 12454 (March 4, 1993), EPA determined that zero discharge was technically available and economically achievable for the industry as a whole. See Offshore preamble, Offshore Development Document, and Offshore Economic Analysis.]

EPA is also retaining the existing BAT limitations on: (1) the stock barite of 1 mg/kg mercury and 3 mg/kg cadmium; (2) the maximum aqueous toxicity of discharged SBF-cuttings as the minimum 96-hour LC_{50} of the suspended particulate phase (SPP) toxicity test shall be 3% by volume; and (3) the discharge of drilling wastes containing diesel oil in any amount is prohibited. These limitations control the levels of toxic metal and aromatic pollutants, respectively. EPA believes all of these components are essential for appropriate control of SBF-cuttings discharges.

The BAT effluent limitations promulgated for SBF-cuttings control a variety of toxic and nonconventional pollutants in the stock base fluids by controlling their PAH content, sediment toxicity, and biodegradation. The BAT effluent limitations promulgated for SBF-cuttings also control a variety of toxic and nonconventional pollutants at the point of discharge by controlling formation oil contamination, sediment toxicity, and the quantity of SBF discharged. The BAT stock and discharge limitations are described below.

The BAT level of control in offshore waters has been developed taking into consideration among other things: (1) the availability, cost, and environmental performance of SBF base fluids in terms of PAH content, sediment toxicity, and biodegradation rate; (2) the availability, cost, and environmental performance of SBFs retained on the cuttings discharge in terms of sediment toxicity; (3) the frequency of formation oil contamination at the various control levels for the discharges; (4) the availability, cost, and environmental performance of equipment and methods to recover SBF from the drill cuttings being discharged; and (5) the NWQIs of each option. By environmental performance, EPA means both a reduction in the quantity of pollutants discharged to the ocean and a reduction in their environmental effects in terms of sediment toxicity, aquatic toxicity, and biodegradation rate. Issues related to the technical availability and economic

achievability of promulgated BAT limitations are discussed below by regulated parameter. The NWQIs of each selected option also are discussed below. EPA also considered NWQIs in selecting the controlled discharge option for SBF-cuttings (i.e., BAT/NSPS Option 2).

EPA and industry sediment toxicity and biodegradation laboratory studies show that both vegetable esters and low viscosity esters have better environmental performance than all other SBF base fluids. EPA, however, rejected the option of basing BAT sediment toxicity and biodegradation stock limitations and standards solely on vegetable esters and low viscosity esters because the record does not indicate that these fluids can be used in drilling situations throughout the offshore subcategory nor could EPA predict the conditions and circumstances where these fluids could be used. Specifically, EPA considered the large number of factors related to whether esters could be used (e.g., formation characteristics, water depth, temperature requirements, solids contamination, reactivity with alkaline materials) and determined that EPA did not have sufficient information to specify when esters could be used. EPA is sufficiently satisfied, however, that both esters provide better environmental performance (e.g., sediment toxicity, biodegradation). Consequently, EPA is promulgating a higher retention on cuttings (ROC) BAT discharge limitation to encourage the use of esters. The higher ROC discharge limitation for SBFs complying with the stock limitations based on esters is derived from data representing four cuttings dryer technologies (e.g., vertical centrifuge, horizontal centrifuge, squeeze press mud recovery unit, and High-G linear shaker). The lower ROC BAT discharge limitation for the SBFs complying with the C_{16}-C_{18} internal olefin stock limitations is based on data from the two top performing cuttings dryer technologies (*e.g.*, vertical centrifuge and horizontal centrifuge). EPA data demonstrate that operators properly using these cuttings dryer technologies (e.g., vertical centrifuge, horizontal centrifuge, squeeze press, High-G linear shaker) are able to comply with these final ROC numerical limitations. EPA believes that this balancing of the importance of retention values with environmental performance as reflected by sediment toxicity and biodegradation rates is justified because of the greater ability of esters to biodegrade and of their lower sediment toxicity.

EPA determined that zero discharge for BAT was technically feasible and economically achievable because prior to the use of SBFs, the industry was able to operate using only the traditional OBFs (based on diesel oil and mineral oil), which are prohibited from discharge. EPA concluded that a zero discharge BAT limitation for SBF-cuttings would decrease the use of SBFs in favor of OBFs and WBFs. This is because a zero discharge BAT limitation for SBF-cuttings would create an incentive for operators to use the least expensive drilling fluids (i.e., OBFs, WBFs) in order to minimize overall compliance costs.

However, EPA rejected the BAT zero discharge option for SBF-cuttings wastes because it would result in unacceptable increases in NWQIs. Therefore, EPA rejected the zero discharge option for SBF-

cuttings wastes in the offshore subcategory of 40 CFR 435. Use of OBFs in place of SBFs would lead to an increase in NWQIs including the toxicity of the drilling waste. Use of WBFs in place of SBFs would generally lead to a per well increase in pollutants discharged, an increase in NWQIs, and an increase in aquatic toxicity. WBF drilling operations lead to per well increases in pollutants discharged because WBFs generate six times more washout (e.g., sloughing) of the well wall than SBFs. Also, WBF drilling operations lead to increases in NWQIs because WBF drilling operations generally take longer than SBF drilling operations which lead to more air emissions and fuel usage from drilling rigs and equipment. Aquatic toxicity generally increases when drilling fluid manufacturers add supplements (e.g., glycols, shale inhibitors) to WBFs for the purpose of making WBFs have technical capabilities (e.g., lubricity, shale suppression) similar to SBFs. EPA estimates that, under the zero discharge option, some operators would switch to WBF compositions with more non aqueous drilling fluid properties (e.g., lubricity, shale suppression), and that these WBFs would exhibit greater aquatic toxicity.

EPA's analyses show that under the SBF-cuttings zero discharge option as compared to current practice, for offshore existing sources there would be an increase of 35 million pounds of cuttings shipped annually to shore for disposal in non-hazardous oilfield waste (NOW) sites and an increase of 166 million pounds of cuttings injected. In addition, under the SBF-cuttings zero discharge option, operators would use the more toxic OBFs. The zero discharge option for SBF-cuttings would lead to an increase in annual fuel usage of 358,664 BOE and an increase in annual air emissions of 5,602 tons. Finally, the SBF-cuttings zero discharge option in offshore waters would lead to an increase of 51 million pounds of WBF cuttings being discharged to offshore waters. This pollutant loading increase is a result of Gulf of Mexico operators switching from more efficient SBF drilling to less efficient WBF drilling.

EPA's analyses show that impacts of adequately controlled SBF discharges to the water column and benthic environment are of limited scope and duration. By contrast, the landfilling of OBF-cuttings is of a longer term duration and associated pollutants may affect ambient air, soil, and groundwater quality. EPA and DOE documented at least five CERCLA ("Superfund") sites in Louisiana and California contaminated with oilfield wastes and more than a dozen sites subject to Federal or state cleanup actions.

Nonetheless, while SBF-cuttings discharge with adequate controls is preferred over zero discharge to offshore waters, SBF-cuttings discharge with inadequate controls is not preferred over zero discharge. EPA believes that to allow discharge of SBF-cuttings to offshore waters, there must be appropriate controls to ensure EPA's discharge limitations reflect the "best available technology" or other appropriate level of technology. EPA has worked with industry to address the appropriate determination of PAH content, sediment toxicity, biodegradation, quantity of SBF discharged, and formation oil contamination that are

technically available, economically achievable, and have acceptable NWQIs. The final BAT limitations are a result of this effort and are discussed below.

EPA, however, did not base the higher ROC BAT discharge limitation on current or existing shale shaker technology as EPA finds that shale shakers are less effective at reducing base fluid retained on cuttings than the selected BAT solids control technology, cuttings dryers. As previously stated in the April 2000 NODA, field results show that: (1) cuttings are dispersed during transit to the seabed and no cuttings piles are formed when SBF concentrations on cuttings are held below 5%; and (2) cuttings discharged from cuttings dryers (with SBF retention values under 5%) in combination with a sea water flush, hydrate very quickly and disperse like water-based cuttings. The LTA based on data from all four cuttings dryers is 4.8% while the LTA for baseline solids control technology (e.g., shale shakers, fines removal units) is 10.2%. Therefore, the selected BAT solids control technology, in combination with BAT stock and discharge limitations, is superior to existing solids control technology (shale shakers) in controlling environmental impacts.

EPA is promulgating BAT of zero discharge for SBF-cuttings for coastal Cook Inlet, Alaska except when operators are unable to dispose of their SBF-cuttings using any of the following disposal options: (1) onsite injection (annular disposal or Class II UIC); (2) injection using a nearby coastal or offshore Class II UIC disposal well; or (3) onshore disposal using a nearby Class II UIC disposal well or land application. Coastal Cook Inlet operators are required to demonstrate to the NPDES permit authority that none of the above three disposal options are technically feasible in order to qualify for the alternate BAT limitation. Operators that qualify for the alternate BAT limitation are allowed to discharge SBF-cuttings at the same level of BAT control as operators in offshore waters. The NPDES permit authority will use the procedure given in Appendix 1 to Subpart D of 40 CFR Part 435 to establish whether or not an operator qualifies for the SBF-cuttings zero discharge exemption. As stated in Appendix 1 to Subpart D of 40 CFR Part 435, the following factors are considered in the determination of whether or not Cook Inlet operators qualify for the SBF-cuttings zero discharge exemption: (1) inability to establish formation injection in wells that were initially considered for annular or dedicated disposal; (2) inability to prove to UIC controlling authority that the waste will be confined to the formation disposal interval; (3) inability to transport drilling waste to an offshore Class II UIC disposal well or an onshore disposal site; and (4) whether or not there are no available land disposal facilities (e.g., onshore re-injection, land disposal).

EPA finds that this option is technically available and economically achievable. Operators are currently barred from discharging OBFs, SBFs, and enhanced mineral oil based drilling fluids under the Cook Inlet NPDES general permit (64 FR 11889). Many Cook Inlet operators in coastal waters are

currently using cuttings injection to comply with zero discharge disposal requirements for OBFs and OBF-cuttings. EPA contacted Cook Inlet operators (e.g., Phillips, Unocal, Marathon Oil) and the state regulatory agency, AOGCC, for more information on the most recent injection practices of coastal and offshore Cook Inlet operators. AOGCC stated that there should be enough formation injection disposal capacity for the small number of non-aqueous drilling fluid wells (< 5-10 wells per year) being drilled in Cook Inlet coastal waters. Therefore, because coastal Cook Inlet operators are already complying with zero discharge of OBF- and SBF-cuttings, this option is economically achievable as there are no incremental compliance costs.

AOGCC stated, however, that case-specific limitations should be considered when evaluating disposal options. Cook Inlet operators may experience the following difficulties in attempting to comply with a zero discharge requirement for SBFs: (1) inability to establish formation injection in wells that were initially considered for annular or dedicated Class II UIC disposal; (2) inability to prove to AOGCC's satisfaction that the waste will be confined to the formation disposal interval; and (3) inability to transport drilling waste to an offshore Class II UIC disposal well or an onshore disposal site. EPA believes that while these problems are currently not presented by drilling in Cook Inlet, they could be a problem in the future. Further, EPA believes this to be a greater problem in Cook Inlet where climate, tides, and distance from commercial disposal sites make transportation to shore less feasible than in other offshore waters. If EPA did not provide for some exceptions within the guideline itself and these problems were encountered beyond the time frame for requesting a Fundamentally Different Factors variance (under section 301(n)(2) of the CWA, 180 days) this would render zero discharge not achievable. Therefore, EPA believes it reasonable to provide some flexibility to the current practice of zero discharge in Cook Inlet.

EPA further finds the NWQIs of this option for Cook Inlet to be acceptable. As previously stated, few non-aqueous drilling fluid wells are drilled in coastal Cook Inlet, Alaska (< 5-10 wells per year). EPA finds that the small number of wells drilled per year (even if all of them are drilled using SBF) leads to very small increases in NWQIs. In particular, a zero discharge requirement for SBFs and SBF-cuttings in Cook Inlet would lead to 400 tons of air emissions and 25,667 BOE fuel used. Consequently, EPA finds that the overall small increases in NWQIs from the zero discharge option, as compared to either of the two SBF-cuttings discharge options, in coastal Cook Inlet, Alaska, are acceptable.

EPA therefore finds the NWQIs in coastal Cook Inlet, Alaska, to be far different from other offshore areas. In the GOM, the NWQIs are in total approximately 58 times greater than Cook Inlet. This is due to the vast difference in the number of wells drilled and in the method of disposal. In the GOM 80% of the wells use land disposal and 20% of the wells use re-injection. Land disposal, creates energy use, air

emissions, and land application of waste. Moreover, EPA believes that operators in the GOM would simply switch their fluids to WBFs and OBFs if EPA selected zero discharge, with the corresponding NWQIs and water impacts associated with WBFs and OBF use. By contrast, in coastal Cook Inlet, Alaska, because zero discharge is current practice, EPA projects operators will not switch from SBFs to OBFs and WBFs due to this rule. Further, the total quantity of NWQIs from injection in coastal Cook Inlet, Alaska, is not significant.

EPA also finds the NWQIs of zero discharge of coastal Cook Inlet, Alaska, to be distinguishable from the NWQIs of zero discharge in offshore California. In offshore California, if EPA selected zero discharge, EPA projects that operators would be far more likely to transport their waste to shore than re-inject offshore. This transportation to shore generates land waste, energy requirements, and additional air emissions in areas that have known air quality problems. For these reasons, EPA believes it is reasonable to make a different choice regarding zero discharge in coastal Cook Inlet, Alaska, than in other waters covered by this rule.

3.3.2 *Stock Base Fluid Technical Availability and Economic Achievability*

As SBFs have developed over the past few years, industry has come to use mainly a limited number of primary base fluids. These include the internal olefins, linear alpha olefins, poly alpha olefins, paraffinic oils, C_{12}-C_{14} vegetable esters of 2-hexanol and palm kernel oil, and "low viscosity" C_8 esters. These fluids represent virtually all the SBFs currently used in oil and gas extraction industry. EPA collected data on performance, environmental impacts, and costs for these SBFs to develop the effluent limitations for final rule. The following definitions describe various SBFs.

- Internal olefin (IO) refers to a series of isomeric forms of C_{16} and C_{18} alkenes.
- Linear alpha olefin (LAO) refers to a series of isomeric forms of C_{14} and C_{16} monoenes.
- Poly alpha olefin (PAO) refers to a mix mainly comprised of a hydrogenated decene dimer $C_{20}H_{62}$ (95%), with lesser amounts of $C_{30}H_{62}$ (4.8%) and $C_{10}H_{22}$ (0.2%).
- Vegetable ester refers to a monoester of 2-ethylhexanol and saturated fatty acids with chain lengths in the range C_8 - C_{16}.
- "Low viscosity" ester refers to an ester of natural or synthetic C_8 fatty acids and alcohols.

EPA also has data on other SBF base fluids, such as enhanced mineral oil, paraffinic oils (i.e., saturated hydrocarbons or "alkanes"), and the traditional OBF base fluids: mineral oil and diesel oil.

The stock base fluid limitations are based on the technology of product substitution. The promulgated limitations are technically available because they are based on currently available base fluids that can be used in the wide variety of drilling situations in offshore waters. EPA anticipates that the base fluids meeting all requirements include vegetable esters, low viscosity esters, and IOs. In addition, based on current information, EPA believes that the stock base fluid controls on PAH content, sediment toxicity, and biodegradation rate being promulgated are sufficient to only allow the discharge of only those base fluids (e.g., esters, IOs) with lower bioaccumulation potentials (i.e., log K_{ow} < 3 to 3.5 and log K_{ow} > 6.5 to 7). Therefore, EPA found it was unnecessary to promulgate a separate limitation for bioaccumulation.

In the NODA, EPA considered basing the sediment toxicity and biodegradation stock limitations and standards solely on vegetable esters (i.e., original esters) instead of the proposed C_{16}-C_{18} IO. EPA also considered subcategorizing the final rule to determine when vegetable esters are not practical and when C_{16}-C_{18} IOs could be used instead. EPA considered these options due to the potential for better environmental performance of vegetable ester-based drilling fluids. EPA and industry analytical testing show that esters have better sediment toxicity and biodegradation performance.

EPA rejected the option of basing sediment toxicity and biodegradation stock limitations and standards on vegetable esters due to several technical limitations. These technical limitations of vegetable esters preclude their use in all areas of the Gulf of Mexico, offshore California, and Cook Inlet, Alaska. Vegetable ester technical limitations include: (1) high viscosity compared with other IO SBFs at all temperatures, with an increasing difference as temperature decreases, leading to lower rates of penetration in wells and greater probability of losses due to higher equivalent circulating densities; (2) high gel strength in risers that develops when a vegetable ester-SBF is not circulated; (3) a high temperature stability limit ranging from about 225 °F to perhaps 320 °F – the exact value depends on the detailed chemistry of the vegetable ester (i.e., the acid, the alcohol) and the drilling fluid chemistry; (4) reduction of the thermal stability limit through hydrolysis when vegetable esters are in contact with highly basic materials (e.g., lime, green cement) at elevated temperatures; and (5) less tolerance of the muds to contamination by seawater, cement, and drill solids than is observed for IO-SBFs.[3, 4, 5, 6, 7, 8, 9]

EPA also rejected the option of subcategorizing the use of esters to define drilling conditions when only esters could be allowed for a controlled discharge. EPA could not establish a “bright line” rationale to define the situation where only esters should be the benchmark fluid (i.e., only esters would be allowed for a controlled discharge). EPA considered many of the engineering factors used for selection of a drilling fluid (e.g., rig size and equipment; formation characteristics; water depth and environment; lubricity, rheological, and thixotropic requirements) and determined that this type of sub-categorization was not possible. Because

of the large number of factors affecting whether esters could be used and the complexity of how the factors relate to each other, EPA did not have enough information to develop a set of conditions under which esters could be used. EPA, however, is encouraging the use of esters by promulgating a higher ROC limitation and standard when esters are used.

66

EPA also considered basing sediment toxicity and biodegradation stock limitations and standards on low viscosity esters. Comments to the April 2000 NODA state that laboratory analyses, which were designed to simulate Gulf of Mexico conditions to which a fluid may be exposed, indicate that low viscosity esters have the following technical properties and uses.

- Similar or better viscosity than C_{16}-C_{18} IOs
- Used to formulate stable low viscosity ester-SBFs up to 300°F
- Used to formulate low viscosity ester-SBFs to 16.0+ lbs/gal mud weight
- Reduce oil/water ratios to 70/30, thus reducing volumes of base fluid discharged
- High tolerance to drilled solids
- Flat gels make it easier to break circulation, minimizing initial circulation pressures and subsequent risk of fracture
- High tolerance to seawater contamination
- Rheological properties can be adjusted by use of additives to suit specific conditions.[9]

EPA also received information on one well section drilled with low viscosity esters. Some of the results from this low viscosity ester well section were compared to the results from another well section in the same location where C_{16}-C_{18} IOs were used. These results show that the low viscosity ester had: (1) comparable or better equivalent circulating densities (i.e., acceptable fluid properties); and (2) faster ROP through better hole cleaning and higher lubricity (i.e., fewer days required to drill to total depth which lead to less NWQI and overall drilling costs). The low viscosity esters are relatively new base fluids and have only recently been available to the market. Despite the results from the laboratory analyses and one well section, EPA does not believe that this is enough information to make the determination that low viscosity esters can be used in all or nearly all drilling conditions in the offshore waters (e.g., differing formations, water depths, and temperatures). Therefore, EPA rejected the option of basing sediment toxicity and biodegradation stock limitations and standards on low viscosity esters. EPA is sufficiently satisfied, however, that low viscosity esters and vegetable esters provide better environmental performance (e.g., sediment toxicity, biodegradation). Consequently, EPA is promulgating higher retention on cuttings discharge limitations where esters are used to encourage operators to use esters when possible.

3.3.2.1 *PAH Content Technical Availability*

The promulgated limitation of PAH content for offshore waters is a weight ratio defined as the weight of PAH (as phenanthrene) per weight of the stock base fluid sample. The PAH weight ratio is 0.001%, or 10 parts per million (ppm). This limitation is based on the availability of base fluids that are free of PAHs as detected by EPA Method 1654A, "PAH Content of Oil by High Performance Liquid Chromatography with a UV Detector." Method 1654A is published in Methods for the Determination of Diesel, Mineral and Crude Oils in Offshore Oil and Gas Industry Discharges (EPA-821-R-92-008).

EPA's promulgated PAH content limitation is technically available. Producers of several SBF base fluids have reported to EPA that their base fluids are free of PAHs, including IOs, LAOs, vegetable esters, low viscosity esters, certain enhanced mineral oils, synthetic paraffins, certain non-synthetic paraffins, and others. The use of these fluids can accommodate the broad variety of drilling situations faced by industry in offshore waters. Compliance with the stock BAT limitation and NSPS on PAH content can be achieved by product substitution.

3.3.2.2 *Sediment Toxicity Technical Availability*

EPA has promulgated a sediment toxicity stock base fluid limitation that only allows the discharge of SBF-cuttings using SBF base fluids as toxic or less toxic, but not more toxic, than C_{16}-C_{18} IOs. Alternatively, this limitation could be expressed in terms of a "sediment toxicity ratio" which is defined as 10-day LC_{50} of C_{16}-C_{18} IOs divided by the 10-day LC_{50} of stock base fluid being tested. EPA is promulgating a sediment toxicity ratio of less than 1.0. Compliance with this limitation is determined by the 10-day *Leptocheirus plumulosus* sediment toxicity test (ASTM E1367-92: "Standard Guide for Conducting 10-day Static Sediment Toxicity Tests With Marine and Estuarine Amphipods," supplemented with the preparation procedure specified in Appendix 3 of Subpart A of 40 CFR 435).

To support the final rule, EPA and other researchers conducted numerous 10-day *L. plumulosus* sediment toxicity tests on various SBF base fluids with natural and formulated sediments. Nearly all SBF base fluids have lower sediment toxicity than diesel and mineral oil. Some SBF base fluids, however, show greater sediment toxicity than other SBF base fluids.[1] The base fluids meeting this limitation include vegetable esters, low viscosity esters, IOs, and some PAOs.[1]

EPA finds this limit to be technically available through product substitution because information in the rulemaking record supports the findings that vegetable esters, low viscosity esters, and IOs have

performance characteristics enabling them to be used in the wide variety of drilling situations in offshore waters and to meet the promulgated limit.

EPA selected the C_{16}-C_{18} IO, which is the most popular drilling fluid in the Gulf of Mexico, as the basis for the sediment toxicity rate ratio limitation instead of the vegetable ester or low viscosity ester for several reasons: (1) EPA does not believe that vegetable esters can be used in all drilling situations; and (2) EPA does not have sufficient field testing information supporting the use of low viscosity esters in all drilling situations. Operators may not be encouraged to switch from OBFs or WBFs to SBF if only vegetable ester- or low viscosity ester-SBFs could be discharged. As previously stated, EPA is promoting the appropriate conversion from OBF- and WBF-drilling to SBF-drilling in order to reduce pollutant loadings and NWQI. Due to demonstrated or potential technical limitations of vegetable esters or low viscosity esters, EPA estimates that the pollutant loadings and NWQIs associated with establishing vegetable esters or low viscosity esters as the basis for stock limitations are similar to the pollutant loadings and NWQIs associated with the zero discharge option for all SBF-cuttings. EPA finds these increases in pollutant loadings and NWQIs as unacceptable.

The SBF rulemaking record indicates that drilling fluids that meet the stock base fluid sediment toxicity limitation and standard (e.g., internal olefins) will meet all drilling requirements in the OCS. EPA did not base the stock base fluid sediment toxicity limitation and standard on vegetable esters or low viscosity esters for two reasons. First, EPA documented technical limitations of vegetable esters in the deep water environment; second, EPA did not have enough information to make the determination that low viscosity esters can be used in all or nearly all drilling operations in the OCS. However, EPA did provide an incentive in the way of a higher ROC limitation for the use of esters or their equivalent with respect to sediment toxicity.

3.3.2.3 *Biodegradation Rate Technical Availability*

EPA is promulgating a biodegradation stock base fluid limitation that would only allow the discharge of SBF-cuttings using SBF base fluids that degrade as fast or greater than C_{16}-C_{18} IOs. Alternatively, this limitation could be expressed in terms of a “biodegradation rate ratio” which is defined as the percent degradation of C_{16}-C_{18} IOs divided by the percent degradation of stock base fluid being tested, both at 275 days. EPA is promulgating a biodegradation rate ratio of less than 1.0. As stated in the April 2000 NODA, EPA is promulgating the use of the marine anaerobic closed bottle biodegradation test (i.e., ISO 11734:1995) with modifications for compliance with this biodegradation BAT limitation. The technology basis for this limitation is product substitution. Industry and EPA research efforts conducted in support of

the SBF final rule indicate the order of degradation, from fastest to slowest, is: vegetable and low viscosity esters > LAO > IO > linear paraffin > mineral oil > PAO. To meet this limitation through product substitution, the base fluids currently available for use include vegetable esters, low viscosity esters, LAO, and IOs.

EPA finds this limit to be technically available through product substitution because information in the rulemaking record supports the findings that vegetable esters, low viscosity esters, and IOs have performance characteristics enabling them to be used in the wide variety of drilling situations in offshore waters and to meet the promulgated limit. Marketing data given to EPA shows that IO SBFs are the most popular SBFs used in the Gulf of Mexico.

The marine anaerobic closed bottle biodegradation test (i.e., ISO 11734:1995) is modified to make the test more applicable to a marine environment. These modifications are listed in Appendix 4 of Subpart A of 40 CFR 435 and include: (1) the laboratory shall use seawater in place of freshwater; (2) the laboratory shall use marine sediment in place of digested sludge as an inoculum; and (3) the laboratory shall run the test for 275 days.

EPA selected the closed bottle test because it models the ability of a drilling fluid to degrade anaerobically. Industry comments to the April 2000 NODA report the results of seabed surveys.[5] These seabed surveys and the scientific literature indicate that the environments under cuttings piles are anaerobic and that the recovery of seabeds did not occur in acceptable periods of time when drilling fluids cannot anaerobically degrade (e.g., diesel oils, mineral oils). The scientific literature also indicates that there is no known mechanism for initiation of anaerobic alkane biodegradation.[10] The general anaerobic microbiology literature indicates that metabolic pathways are just beginning to be determined for anaerobic biodegradation of linear alkanes. The anaerobic biodegradability of the SBF base fluid represents an essential prerequisite for the prevention of long-term persistence of SBFs and deleterious impacts on marine sediments.[11] Therefore, EPA considers the control of anaerobic degradation as the most environmentally relevant way to ensure the biodegradation of SBF under cuttings piles and other anaerobic environments for the recovery of benthic organisms and environments in an acceptable period.

EPA has selected the C_{16}-C_{18} IO as the basis for the biodegradation rate ratio limitation instead of the vegetable ester or low viscosity ester for two reasons: (1) EPA does not believe that vegetable esters can be used in all drilling situations; and (2) EPA does not have sufficient field testing information that low viscosity esters can be used in all drilling situations. Operators may not be encouraged to switch from OBFs or WBFs to SBF if only vegetable ester- or low viscosity ester-SBFs could be discharged. As previously

stated, EPA is promoting the appropriate conversion from OBF- and WBF-drilling to SBF-drilling in order to reduce pollutant loadings and NWQI. Due to demonstrated or potential technical limitations of vegetable esters or low viscosity esters, EPA estimates that the pollutant loadings and NWQIs associated with establishing vegetable esters or low viscosity esters as the basis for stock limitation are similar to the pollutant loadings and NWQIs associated with the zero discharge option for all SBF-cuttings. EPA finds these increases in pollutant loadings and NWQIs as unacceptable. Nevertheless, due to EPA's information (primarily laboratory data) that indicates that esters provide better environmental performance in terms of sediment toxicity and biodegradation, EPA is promulgating a higher ROC limitation and standard where esters are used to encourage operators to use esters when possible.

The SBF rulemaking record indicates that drilling fluids meeting the stock base fluid biodegradation limitation and standard (i.e., internal olefins) will meet all drilling requirements in the OCS. EPA did not base the stock base fluid biodegradation limitation and standard on vegetable esters or low viscosity esters for two reasons: (1) the documented technical limitations of vegetable esters in the deep water environment; and (2) insufficient information to make the determination that low viscosity esters can be used in all or nearly all drilling operations in the OCS. However, EPA did provide incentives in the way of a higher ROC limitations for the use of esters or their equivalent with respect to biodegradation.

3.3.2.4 *Economic Achievability of Stock Base Fluid Controls*

EPA finds that the promulgated stock base fluid controls are economically achievable. Industry representatives have told EPA that while the synthetic base fluids are more expensive than diesel and mineral oil base fluids, the savings in discharging the SBF-cuttings versus land disposal or injection of OBF-cuttings (as required under current regulations) more than offsets the increased cost of SBFs. Moreover, the reduced time to complete a well with SBF as compared with OBF- and WBF-drilling can be significant (i.e., days to weeks). This reduction in time translates into lower rig rental costs for operators. Thus, operator costs are lower even with the more expensive SBF provided the drill cuttings with adhering SBF can be discharged. The stock base fluid limitations outlined above and promulgated by EPA are technically achievable through product substitution with the use of the currently widely used SBFs based on IOs ($160/bbl), vegetable esters ($250/bbl), and low viscosity esters ($300/bbl).[12] For comparison, diesel oil-based drilling fluid costs about $70/bbl, and mineral oil-based drilling fluid costs about $90/bbl. According to industry sources, currently in the Gulf of Mexico the most widely used and discharged SBFs are, in order of use, based on IOs, LAOs, and vegetable esters. Because the stock limitations allow the continued use of the IO- and ester-SBFs, EPA attributes no additional cost due to the stock base fluid requirements other than monitoring (testing and certification) costs. EPA also examined costs to the few operators that have

been using less costly SBFs that don't meet these requirements (particularly anaerobic degradation) and have found these costs to be economically achievable (see SBF Economic Analysis). EPA estimates that dischargers will satisfy: (1) the base fluid stock sediment toxicity and biodegradation limitations by having suppliers monitor once annually; and (2) the PAH and formation oil limitations by having suppliers monitor each batch of stock SBF.

EPA also considered NWQIs in selecting the controlled discharge option for SBF-cuttings (i.e., BAT/NSPS Option 2).

3.3.3 *Discharge Limitations Technical Availability and Economic Achievability*

3.3.3.1 *Formation Oil Contamination of SBF-Cuttings*

EPA has promulgated a BAT limitation of zero discharge to control formation oil contamination on SBF-cuttings. EPA is also promulgating a screening method (Reverse Phase Extraction [RPE] method presented in Appendix 6 to Subpart A of Part 435) and a compliance assurance method (Gas Chromatograph/Mass Spectrometer [GC/MS] method presented in Appendix 5 to Subpart A of Part 435) to demonstrate compliance with this zero discharge requirement.

Formation oil is an "indicator" pollutant for the many toxic and priority pollutant pollutants present in formation (crude) oil (e.g., aromatic and polynuclear aromatic hydrocarbons). The RPE method is a fluorescence test and is appropriately "weighted" to better detect crude oils. These crude oils contain more toxic aromatic and PAH pollutants and show brighter fluorescence (i.e., noncompliance) in the RPE method at lower levels of crude oil contamination. Under the final rule, approximately 5% of all (all meaning a large representative sampling) formation oils would fail (not comply) at 0.1% contamination of SBFs and 95% of all formation oils will fail at 1.0% contamination of SBFs. The majority of formation oils will fail at 0.5% contamination of SBFs. Because the RPE method is a relative brightness test, GC/MS is promulgated as a confirmatory compliance assurance method when the results from the RPE compliance method are in doubt by either the operator or the enforcement authority. Results from the GC/MS method will supersede those of the RPE method. EPA is also requiring that dischargers verify and document that a SBF is free of formation oil contamination before initial use of the SBF. The GC/MS method will be used to verify and document the absence of formation oil contamination in SBFs.

EPA intends that the BAT limitation promulgated on formation (crude) oil contamination in SBF is no less stringent that the existing BAT limitation on WBF through the static sheen test (Appendix 1 of

Subpart A of 40 CFR 435). In most cases, the static sheen test detects formation oil contamination in WBF down to 1% and in some cases down to 0.5%. Based on the available information, EPA believes that only a very minimal amount of SBF will be non-compliant with this limitation and therefore be required to be disposed of onshore or by injection. EPA thus finds that this limitation is technically available. EPA also finds this option to be economically achievable because there is no reason why formation oil contamination would occur more frequently under this rule than under current rules that industry can economically afford. EPA has determined that essentially no costs are associated with this requirement other than monitoring and reporting costs, which are minimal costs for this industry, but are incorporated into the cost and economic analyses.

3.3.3.2 *Retention of SBF on SBF-Cuttings*

EPA has promulgated BAT limitations controlling the amount of SBF discharged with SBF-cuttings for the offshore subcategory where SBF-cuttings may be discharged. As previously stated, limiting the amount of SBF content in discharged cuttings controls: (1) the amount of toxic and non-conventional pollutants in SBF that are discharged to the ocean; (2) the biodegradation rate of discharged SBF; and (3) the potential for SBF-cuttings to develop cuttings piles and mats that are deleterious to the benthic environment. The BAT limitations promulgated for controlling the amount of SBF discharged with SBF-cuttings are averaged by hole volume over the well sections drilled with SBF. Those portions of the SBF-cuttings waste stream that are retained for zero discharge (e.g., fines) are factored into the weighted well average with a retention value of zero.

EPA evaluated the costs, cost savings, and technical performance of several technologies to recover SBF from the SBF-cuttings discharge. EPA also investigated the use of Best Management Practices (BMPs) to reduce the amount of SBF discharge on SBF-cuttings. Typical BMPs for SBF-cuttings include regulating the flow and dispersion across solid control equipment screens and properly maintaining these screens. EPA also considered NWQIs (e.g., land disposal requirements, fuel use, air emissions, safety, and other considerations) in setting the SBF retention on SBF-cuttings BAT limitation.

The drilling fluid and drill cuttings undergo an extensive separation process by the solids control system to remove drilling fluid from the drill cuttings. The solids control system is necessary to maintain constant drilling fluid properties and/or change them as required by the drilling conditions. Drilling fluid recovered from the solids control equipment is recycled into the active mud system (e.g., mud pits, mud pumps) and back downhole. Drill cuttings discarded from the solids control equipment are a waste product.

Drill cuttings are also cleaned out of the mud pits and from the solid separation equipment during displacement of the drilling fluid system (i.e., accumulated solids).

Most drilling operators use, at a minimum, a solids control system typically consisting of primary and secondary shale shakers in series with a “fines removal unit” (e.g., mud cleaner, decanting centrifuge). The primary and secondary shale shakers remove the larger and smaller cuttings, respectively. The fines removal unit removes the “fines” (i.e., low gravity solids) down to approximately 5 microns (10^{-6} meters). Solids less than 5 microns are labeled as “entrained” and are unable to be removed by solids control equipment. Because of their small size and large surface area per unit volume, the fines retain more drilling fluid than an equal amount of larger cuttings coming off the shale shakers. This solid control equipment configuration was labeled as “baseline” (i.e., representative of current industry practice) in the NODA. EPA continues to use this solid control equipment configuration as baseline in the analyses supporting the final rule.

EPA assessed the baseline performance using industry submitted ROC data received before and in response to the NODA. EPA received sufficient additional cuttings retention data from Gulf of Mexico sources to re-evaluate the discharges of the baseline solids control equipment (e.g., primary shale shaker, secondary shale shaker, fines removal unit) to calculate a revised baseline long-term average retention value of 10.2% by weight of SBF on cuttings. Despite the revision of the retention data, the revised long-term average retention value is only slightly different than the 11% originally calculated for the February 1999 proposal and the 11.4% calculated for the NODA. This relative convergence of the various calculated baseline performance averages provides further confidence in the accuracy of the baseline model and associated data.

Operators also recover additional drilling fluid from drill cuttings discarded from the shale shakers through the use of cuttings dryers (e.g., vertical or horizontal centrifuges, squeeze press mud recovery units, High-G linear shakers). Since the February 1999 proposal and the NODA, the Gulf of Mexico offshore drilling industry has increased its use of “add-on” cuttings drying equipment (i.e., “cuttings dryers”) to reduce the amount of SBF adhering to the SBF-cuttings prior to discharge. Specifically, in response to the NODA, EPA received ROC data from approximately 45 Gulf of Mexico SBF well projects that used cuttings dryers (e.g., vertical or horizontal centrifuges, squeeze press mud recovery units, High-G linear shakers) to reduce the amount of SBF discharged. These 45 Gulf of Mexico SBF well projects represent a broad representation of typical factors affecting solids control equipment performance which include: (1) Gulf of Mexico formation types (e.g., shale, sand, salt); (2) rig types (e.g., drill tension leg platform, semi-submersible); (3) drilling operation types (i.e., exploratory or development); and (4) water depth (i.e.,

shallow or deep). Current data available to EPA indicate that these cuttings dryers can operate consistently and efficiently when properly installed and maintained. Specifically, vendor-supplied data associated with these cuttings dryer deployments suggest that the overall cuttings dryer downtime (i.e., time when cuttings dryer equipment is not operable) is approximately 1 to 2%. EPA finds this small downtime percentage as acceptable.

EPA discussed how it revised the BAT/NSPS-level solids control equipment configuration used in its analyses in the NODA. EPA also discussed a range of management options regarding the BAT limitation for SBF retention on SBF-cuttings: (1) two discharges from the BAT/NSPS-level solids control equipment configuration (i.e., one discharge from the cuttings dryer and another discharge from the fines removal unit); (2) one discharge from the BAT/NSPS-level solids control equipment configuration (i.e., one discharge from the cuttings dryer with the fines from the fines removal unit captured for zero discharge); and (3) zero discharge of SBF-cuttings. These three options are labeled as BAT/NSPS Option 1, BAT/NSPS Option 2, and BAT/NSPS Option 3, respectively. EPA estimates that 97% and 3% of the total cuttings are generated by the cuttings dryer and fines removal unit, respectively.

EPA developed two numerical well averaged ROC limitations (i.e., one for SBFs with the stock base fluid performance similar to esters and another for SBFs with the stock base fluid performance similar to C_{16}-C_{18} IOs) and based both of these ROC limitations on the technology of only one discharge from the cuttings dryer with the fines from the fines removal unit captured for zero discharge (i.e., BAT/NSPS Option 2). The numerical well averaged ROC maximum limitation for SBFs (i.e., 9.4%) with the environmental characteristics of esters is based on a combination of data from horizontal centrifuge, vertical centrifuge, squeeze press, and High-G linear shaker cuttings dryer technologies. The numerical well averaged ROC maximum limitation for SBFs (i.e., 6.9%) with the environmental characteristics of C_{16}-C_{18} internal olefins is based on a combination of data from horizontal and vertical centrifuge cuttings dryer technologies. EPA estimates that operators, generally installing new equipment where none has been used in the past, will be able to choose from among the better technologies, designs, operating procedures, and maintenance procedures that EPA has considered to be among the best available technologies. EPA data demonstrate that operators properly using these cuttings dryer technologies (e.g., vertical centrifuge, horizontal centrifuge, squeeze press, High-G linear shaker) will be able to comply with these final ROC numerical limitations. Data submitted to EPA show that operators using the vertical centrifuge and horizontal centrifuge are capable of achieving the lower ROC limitation (i.e., 6.9%). Data submitted to EPA also show that operators using the vertical centrifuge, horizontal centrifuge, squeeze press, and High-G linear shaker are capable of achieving the higher ROC limitation (i.e., 9.4%).

EPA developed the two ROC limitations because EPA used a two part approach to control SBF-cuttings discharges. The first part is the control of which SBFs are allowed for discharge through use of stock limitations (e.g., sediment toxicity, biodegradation, PAH content, metals content) and discharge limitations (e.g., diesel oil prohibition, formation oil prohibition, sediment toxicity, aqueous toxicity). The second part is the control of the quantity of SBF discharged with SBF-cuttings. As previously stated, EPA and industry sediment toxicity and biodegradation laboratory studies show that both vegetable esters and low viscosity esters have better environmental performance than all other SBF base fluids. However, because the technical availability of product substitution with esters was not demonstrated across the offshore subcategory, EPA rejected the option of basing sediment toxicity and biodegradation stock limitations and standards on vegetable esters and low viscosity esters. EPA is sufficiently satisfied, however, that both esters provide better environmental performance (e.g., sediment toxicity, biodegradation). Consequently, EPA is promulgating a higher retention on cuttings discharge limitation to encourage operators to use esters when possible. EPA estimates that a higher retention on cuttings discharge limitation for esters is equivalent to the same level of control as a lower retention on cuttings discharge limitation for all other SBFs that have poorer sediment toxicity and biodegradation performances.

In response to the NODA, EPA received comments from an ester-SBF manufacturer that EPA should create an incentive for operators to use ester-SBFs by basing the ROC limitation for ester-SBFs on baseline solids control equipment (e.g., primary and secondary shale shakers, fines removal unit).[9, 13] They argued that the superior laboratory performance of these fluids in terms of sediment toxicity and biodegradation justifies allowing them to be discharged with a ROC limitation based on baseline solids control equipment. EPA estimates that a ROC BAT limitation based on the baseline solids control equipment is 15.3%.

While EPA is willing to expand the technology basis to allow the use of less effective cuttings dryers for ester-SBFs (e.g., squeeze press, High-G linear shakes), EPA is unwilling to entirely abandon the use of cuttings dryers for ester-SBF drilling operations. EPA is not setting a higher ROC limitation for SBFs with the environmental performance of ester-SBFs based on baseline solids control technology because the environmental improvement resulting from the use of improved solids control technology (i.e., cuttings dryers) outweighs the incremental ester laboratory sediment toxicity and biodegradation performance over IOs. Cuttings dryers promote pollution prevention through increased re-use of drilling fluids and prevent significant amounts of pollutants from being discharged to the ocean.

EPA provides for variability from the long term average (LTA) of performance data from the candidate treatment technology or technologies. The LTA performance of the baseline solids control

technology is 10.2%, as compared to the LTA of 4.8% based on data from all four cutting dryer technologies. This translates into a difference of 118 million pounds per well of pollutant discharges to the ocean between current practice (i.e., 10.2%) and the improved solids control technologies (i.e., 4.8%). In balancing the environmental effects of these additional ester-SBFs discharges controlled with the use of baseline solids control technology against the environmental effects of lower IO-SBFs discharges controlled with the use of cuttings dryers, EPA has concluded that the improvement in solids control technology leading to lower values of ROC is a more significant factor than laboratory data for ester base fluids showing lower sediment toxicity and higher biodegradation.

EPA also is not convinced that the difference in ROC limitations provides no incentive to use esters-SBFs, as the ester-SBF manufacturer argues. EPA believes that the difference between 6.9% and 9.4% could provide an incentive for operators to use esters-SBFs. Operators may find that it is worthwhile to purchase ester-SBFs in order to be able to operate with even a greater margin of flexibility under a limit of 9.4% as compared to 6.9%.

As the rule is performance based, EPA is not prohibiting the discharge of SBF-cuttings from the fines removal unit in order to comply with the base fluid retained on cuttings discharge BAT limitation. Operators are only required to show that the volume-weighted average of all their SBF-cuttings discharges is below the discharge BAT limitation. EPA expects that most operators will be able to discharge cuttings from the cuttings dryer and fines removal unit and comply with this discharge BAT limitation. If, for example, the average retention of SBF on SBF-cuttings from a cuttings dryer is 6.00%, the average retention of SBF on SBF-cuttings from a fines removal unit is 12.00%, and the fines are observed to comprise 3% of the total cuttings discharged, then the well average is 6.18% [i.e., (0.97)(6.00%) + (0.03)(12.00%) = 6.18%]. If the well average for SBF retention from the cuttings dryer exceeds the discharge limit, then in order to comply with this discharge BAT limitation all cuttings must be injected onsite or hauled to shore for land disposal. EPA finds that if this is the case, the limit is technologically available because operators have transported OBFs to shore since 1986 and have transported WBFs that do not meet the existing effluent limitations and standards since 1993.

EPA finds that both ROC limitations (i.e., 6.9%, 9.4%) are technically available to the industry because it is based on product substitution and a statistical analysis of ROC performance from drilling conditions throughout offshore waters. The BAT limitations for controlling the amount of SBF discharged with SBF-cuttings are calculated such that nearly all well averages for retention are expected to meet these values using the selected technologies without any additional attention to design, operation, or maintenance. EPA data demonstrate that operators properly using these cuttings dryer technologies (e.g., vertical

centrifuge, horizontal centrifuge, squeeze press, High-G linear shaker) will be able to comply with these final ROC numerical limitations because: (1) these limits allow for variation in formation characteristics that may not exist in the United States; (2) operators, generally installing new equipment where none has been used in the past are able to choose from among the better technologies, designs, operating procedures, and maintenance procedures that EPA considers to be among the best available technologies; and (3) operators may elect to use SBFs with the stock base fluid performance of esters and horizontal or vertical centrifuge cuttings dryers to achieve a ROC well average well below the 9.4% ROC limitation.

Data used in the calculation of the numerical limits exclude retention results submitted without backup calculations (i.e., without raw retort data) and include data from drilling operations in foreign waters (e.g., Canada). EPA excluded ROC data without raw retort data (e.g., masses and volumes of cuttings samples and recovered liquids taken during the retort method by the field technician) due to concerns over data quality (e.g., no independent method to check data quality). EPA included ROC data from Canadian drilling operations to incorporate the variability of cuttings dryer performance in harder and less permeable formations that generally lead to higher ROC values. EPA estimates that the major factors leading to higher ROC values for all solids control equipment include: (1) slower rates of penetration; (2) formations that are harder and less permeable; and (3) selection of certain drill bits. The Canadian ROC data come from formations that are generally much harder and less permeable than what is observed in the Gulf of Mexico. These harder formations generally lead to slower rates of penetration. The less permeable Canadian formations lead to fewer downhole losses of SBF. Downhole losses require the addition of fresh SBF to maintain volume requirements for the active mud system. These additions of fresh SBF to the active mud system help control the potential of build-up of fines. In addition, operators often use PDC drill bits in order to grind through the hard Canadian formations. This grinding action leads to smaller cuttings than is what is observed in the Gulf of Mexico. The smaller cuttings have more surface area for SBF than larger cuttings and generally have higher ROC values. Consequently, EPA's use of Canadian data in its analyses incorporate sufficient variability to model the formations in Gulf of Mexico, offshore California, Cook Inlet, Alaska, and other offshore U.S. waters where EPA does not have ROC data.

EPA finds that both well-average discharge BAT ROC limitations (e.g., 6.9%, 9.4%) for base fluid on wet cuttings are economically achievable. According to EPA’s analysis, in addition to reducing the discharge of SBFs associated with the cuttings, EPA estimates that this control will result in a net savings of $48.9 million ($1999) dollars per year. This savings results, in part, because the value of SBFs recovered is greater than the cost of installation of the improved solids control technology. EPA also examined costs to the few operators that have been using less costly SBFs that don’t meet these requirements (particularly

anaerobic degradation) and have found these costs to be economically achievable (see SBF Economic Analysis).

EPA concluded that a zero discharge requirement for SBF-cuttings from existing sources and the subsequent increase use of OBFs and WBFs would result in: (1) unacceptable NWQIs; and (2) more pollutant loadings to the ocean due to operators switching from SBFs to less efficient WBFs. For these reasons, EPA rejected the BAT zero discharge option for SBF-cuttings from existing sources.

In the NODA, EPA requested comments on the issue of rig compatibility with the installation of cuttings dryers (e.g., vertical or horizontal centrifuges, squeeze press mud recovery units, High-G linear shakers). EPA received general information on the problems and issues related to cuttings dryer installations from API/NOIA. API/NOIA stated that not all rigs are capable of installing cuttings dryers.[1] In late comments, some industry commentors submitted initial data indicating that 48 of the 223 Gulf of Mexico drilling rigs are not capable of having a cuttings dryer system installed due to either rig space and/or rig design without prohibitive costs or rig modifications.[14] Upon a further, more extensive review of Gulf of Mexico rigs, these same commentors concluded that 30 of 234 Gulf of Mexico drilling rigs are not capable of having a cuttings dryer system installed due to either rig space and/or rig design without prohibitive costs or rig modifications.[15] EPA also received late comments from one operator, Unocal, stating that 36 of 122 Unocal wells drilled between late 1997 and mid-2000 were drilled with rigs that do not have 40 foot x 40 foot space available for a cuttings dryer installation.[16] The API/NOIA rig survey and the Unocal rig survey identified most of the same rigs as unable to install cuttings dryers. However, two rigs (*i.e.*, Parker 22, Nabors 802) identified in the Unocal rig survey as having no space for a cuttings dryer installation were identified in the API/NOIA rig survey as each having a previous cuttings dryer installation. Finally, EPA received information from a drilling fluid manufacturer and cuttings dryer equipment vendor, M-I Drilling Fluids, stating that they are not aware of any Gulf of Mexico rig not capable of installing a cuttings dryer.[17]

EPA finds that current space limitations for cuttings dryers do not require a 40 foot x 40 foot space. Specifically, EPA has in the record information gathered during EPA's October 1999 site visit and information supplied by API/NOIA, MMS, and equipment vendors. EPA received information from a drilling fluid manufacturer and cuttings dryer equipment vendor, M-I Drilling Fluids, stating that they are not aware of any GOM rig not capable of installing a cuttings dryer.[17] Another cuttings dryer equipment vendor, JB Equipment, asserted that there are at most only a few rigs that pose questionable installation problems and that they have yet to survey a rig that they could not install a cuttings dryer.[22] JB Equipment also stated that inexperience with cuttings dryer installations may inhibit the ability of operators or rig owners to properly judge whether a cuttings dryer can be installed. JB Equipment cited an example where the

operator concluded that a cuttings dryer could not be installed on a rig (Nabors 803) while JB Equipment surveying efforts identified the cuttings dryer installation for the same rig as one of the simplest installations JB Equipment performs. MMS also concluded that rigs do not need a 40 foot x 40 foot space to install a cuttings dryer and that, with the exception of a few jackup and platform rigs, there should not be any significant issues related to installing cuttings dryers on OCS drilling rigs.[21] API/NOIA estimated that 150 square feet are required for a cuttings dryer installation in order to meet the ROC BAT limitation and NSPS.[1] EPA also estimates that the minimum height clearance for a typical cuttings dryer installation is 6 feet. The API/NOIA estimate is based on the installation of a horizontal centrifuge cuttings dryer (i.e., MUD-6). The Unocal estimate is based on the vertical centrifuge cuttings dryer and is also characterized by other industry representatives and MMS as too high.[15, 21] EPA's estimate of a typical vertical centrifuge installation is 15 feet x 15 feet (i.e., 225 square feet) with a minimum height clearance of 11 feet. EPA based the ROC BAT limitation and NSPS (e.g., 6.9%) on the use of both these cuttings dryers for SBFs with the stock limitations of C_{16}-C_{18} IOs. Based on comments from operators, equipment vendors, and MMS, EPA believes that most of these shallow water rigs have the requisite 150-225 square feet available to install a cuttings dryer. Therefore, EPA finds that operators are not required to have a 1,600 square foot space for a cuttings dryer installation in order to meet the ROC BAT limitation and NSPS. Proper spacing and placement of cuttings dryers in the solids control equipment system should prevent installation problems.

Moreover, current usage shows that SBFs are used in only 14% of the total number of wells drilled in shallow water. The majority of SBF usage is in deep water where nearly all rigs are capable of installing cuttings dryers.[15] Therefore, EPA estimates that only a very small percentage of rigs will not be able to do one of the following in order to drill: (1) install cuttings dryers; (2) use WBFs; and (3) perform zero discharge operations (e.g., injection or onshore disposal). Operators that cannot install cuttings dryers, cannot use WBFs, and cannot perform zero discharge operations should apply for a Fundamental Different Factors (FDF) waiver in order for EPA to consider the case-specific conditions (e.g., perform a variable load and center of gravity analysis). Finally, EPA finds that only a small percentage of operators will be forced to use OBFs and zero discharge operations due to their inability to use WBFs or install cuttings dryers and EPA finds the NWQIs associated with these zero discharge operations as acceptable.

EPA has also decided that solids accumulated at the end of the well ("accumulated solids") and wash water are associated with drill cuttings and are therefore, not controlled by the zero discharge requirement for SBFs not associated with drill cuttings. EPA has decided to control accumulated solids and wash water under the discharge requirements for cuttings associated with SBFs. The amount of SBF base fluid discharged with discharged accumulated solids will be estimated using procedures in Appendix 7 to

Subpart A of 40 CFR 435 and incorporated into the base fluid retained on cuttings numeric limitation or standard. The source of the pollutants in the accumulated solids and associated wash water are drill cuttings and drilling fluid solids (e.g., barite). The drill cuttings and drilling fluid solids can be prevented from discharge with SBF-cuttings due to equipment design (e.g., sand traps, sumps) or improper maintenance of the equipment (e.g., failing to ensure the proper agitation of mud pits). EPA agrees with commentors that the discharge of SBF associated with accumulated solids in the SBF active mud system and the associated wash water is normally a one-time operation performed at the completion of the SBF well (e.g., cleaning out mud pits and solids control equipment).

The quantity of SBF typically discharged with accumulated solids and wash water is relatively small. The SBF fraction in the 75 barrels of accumulated solids is approximately 25% and generally only very small quantities of SBF are contained in the 200 to 400 barrels of associated equipment wash water. Current practice is to retain accumulated solids for zero discharge or recover free oil from accumulated solids prior to discharge. Since current practice is to recover free oil and discharge accumulated solids, the controlled discharge option for SBF-cuttings represents current practice and is economically achievable. Moreover, recovering free oil from accumulated solids prior to discharge has no unacceptable NWQIs. EPA defines accumulated solids and wash water as associated with drill cuttings. Therefore, operators will control these SBF-cuttings wastes using the SBF stock limitations and cuttings discharge limitations. As compliance with EPA's SBF stock limitations and cuttings discharge limitations does not require the processing of all SBF-cuttings wastes through the solids control technologies (e.g., shale shakers, cuttings dryers, fines removal units), operators may or may not elect to process accumulated solids or wash water through the solids control technologies.

EPA has also promulgated a set of BMPs for operators to use in order to demonstrate compliance with the numeric ROC limitation. By using this option, operators may reduce the retort monitoring otherwise required to determine compliance with the numeric ROC limitation. This option combines the set of BMPs that represent current practice with BMPs that are associated with the use of improved solids control technology. This option is technologically available and economically achievable for the same reasons that apply to compliance with the ROC numerical limitations. Examples of BMPs that represent current practices are, for example, use of mud guns, proper mixing procedure, and elimination of settling places for accumulated solids. Examples of BMPs associated with the use of the new solids control technology are, for example, operating cuttings dryers in accordance with the manufacturer's specifications and maintaining a certain mass flux. If operators elect to use this BMP option, they are required to demonstrate compliance through limited retort monitoring of cuttings and additional BMP paperwork.

3.3.2.3 *Sediment Toxicity of SBF Discharged with Cuttings*

As originally proposed in February 1999 and re-stated in April 2000, EPA is promulgating a BAT limitation to control the maximum sediment toxicity of the SBF discharged with cuttings. This BAT limitation controls the sediment toxicity of the SBF discharged with cuttings as a nonconventional pollutant parameter and as an indicator for other pollutants in the SBF discharged with cuttings. Some of the toxic, priority, and nonconventional pollutants in the SBF discharged with cuttings may include: (1) the base fluids such as enhanced mineral oils, IOs, LAOs, PAOs, paraffinic oils, C_{12}-C_{14} vegetable esters of 2-hexanol and palm kernel oil, "low viscosity" C_8 esters, and other oleaginous materials; (2) barite which is known to generally have trace contaminants of several toxic heavy metals such as mercury, cadmium, arsenic, chromium, copper, lead, nickel, and zinc; (3) formation oil which contains toxic and priority pollutants such as benzene, toluene, ethylbenzene, naphthalene, phenanthrene, and phenol; and (4) additives such as emulsifiers, oil wetting agents, filtration control agents, and viscosifiers.

The sediment toxicity of the SBF discharged with cuttings is measured by the modified sediment toxicity test (ASTM E1367-92: "Standard Guide for Conducting 10-day Static Sediment Toxicity Tests With Marine and Estuarine Amphipods," supplemented with the preparation procedure specified in Appendix 3 of Subpart A of 40 CFR 435) using a natural sediment or formulated sediment, 96-hour testing period, and *Leptocheirus plumulosus* as the test organism. EPA is promulgating a sediment toxicity limitation for the SBF discharged with cuttings at the point of discharge that would only allow the discharge of SBF-cuttings using SBFs as toxic or less toxic, but not more toxic, than C_{16}-C_{18} IOs SBFs. Alternatively, this limitation is expressed in terms of a "SBF sediment toxicity ratio" which is defined as 96-hour LC_{50} of C_{16}-C_{18} IOs SBF divided by the 96-hour LC_{50} of the SBF being discharged with cuttings at the point of discharge. EPA is promulgating a SBF sediment toxicity ratio of less than 1.0.

As previously stated, establishing discharge limits on toxicity encourages the use of less toxic drilling fluids and additives. The modifications to the sediment toxicity test include shortening the test to 96-hours. Shortening the test will allow operators to continue drilling operations while the sediment toxicity test is being conducted on the discharged drilling fluid. Moreover, discriminatory power is substantially reduced for the 10-day test on drilling fluid as compared to the 96-hour test (i.e., the 10-day test is of lower practical use in determining whether a SBF is substantially different from OBFs). Finally, operators discharging WBFs are already complying with a biological test at the point of discharge, the 96-hour SPP toxicity test, which tests WBF aquatic toxicity using the test organism *Mysidopsis bahia.*

The promulgated sediment toxicity limitation would be achievable through product substitution. EPA anticipates that the base fluids meeting the sediment toxicity limitation would include vegetable esters, low viscosity esters, and IOs. The reference C_{16}-C_{18} IOs SBF is formulated to meet the specifications in Table X-1 and also is contained in Appendix 8 of Subpart A of 40 CFR 435. The sediment toxicity discharge limitation is technically and economically achievable because it is based on currently available base fluids that can be used and are used across the wide variety of drilling situations found in offshore waters. EPA estimates minimal monitoring costs associated with this limitation. Additionally, the sediment toxicity discharge limitation will not lead to an increase of NWQIs.

TABLE X-1

Properties for Reference C_{16}-C_{18} IOs SBF Used in Discharge Sediment Toxicity Testing

Mud Weight of SBF Discharged with Cuttings (pounds per gallon)	Reference C_{16}-C_{18} IOs SBF (pounds per gallon)	Reference C_{16}-C_{18} IOs SBF Synthetic to Water Ratio (%)
8.5 - 11	9.0	75/25
11 -14	11.5	80/20
> 14	14.5	85/15
Plastic Viscosity (PV), centipoise (cP)		12 - 30
Yield Point (YP), pounds/100 sq. ft.		10 - 20
10-second gel, pounds/100 sq. ft.		8 - 15
10-minute gel, pounds/100 sq. ft.		12 - 30
Electrical stability, V		> 300

3.4 NSPS Technology Options Considered and Selected for Drilling Fluid Associated with Drill Cuttings

The general approach followed by EPA for developing NSPS options was to evaluate the best demonstrated SBFs and processes for control of priority toxic, nonconventional, and conventional pollutants. Specifically, EPA evaluated the technologies used as the basis for BPT, BCT and BAT. The Agency considered these options as a starting point when developing NSPS options because the technologies used to control pollutants at existing facilities are fully applicable to new facilities.

EPA has not identified any more stringent treatment technology option that it considered to represent NSPS level of control applicable to the SBF-cuttings waste stream. Further, EPA has made a

finding of no barrier to entry based upon the establishment of this level of control for new sources. Therefore, EPA is promulgating that NSPS be established equivalent to BPT and BAT for conventional, priority, and nonconventional pollutants. EPA concluded that NSPS are technologically and economically achievable for the same reasons that BAT is available and BPT is practical. EPA also concluded that NWQIs are reduced under the selected NSPS for new wells due to the increased efficiency of SBF drilling.

EPA concluded that a zero discharge requirement for SBF-cuttings from new sources and the subsequent increase use of OBFs and WBFs would result in: (1) unacceptable NWQIs; and (2) more pollutant loadings to the ocean due to operators switching from SBFs to less efficient WBFs.

For the same reasons that the BAT limitations promulgated in the final rule are technologically and economically achievable, the promulgated NSPS are also technologically and economically achievable. EPA's analyses show that under the SBF zero discharge option for all areas as compared to current practice as a basis for new source standards there would be an increase of 3.4 million pounds of cuttings annually shipped to shore for disposal in NOW sites and an increase of 10.2 million pounds of cuttings annually injected. This zero discharge option would lead to an increase in annual fuel use of 18,067 BOE and an increase in annual air emissions of 528 tons. Finally, the SBF zero discharge option for the Gulf of Mexico would lead to an increase of 7.5 million pounds of WBF-cuttings being discharged to offshore waters. This pollutant loading increase is a result of operators in offshore waters (in the Gulf of Mexico) switching from efficient SBF drilling to less efficient WBF drilling. EPA found these levels of NWQIs unacceptable and rejected the NSPS zero discharge option for SBF-cuttings from new sources, except in coastal Cook Inlet, Alaska.

3.5 PSES and PSNS Technology Options Considered and Selected

Based on comments to the Coastal rule, the 1993 Coastal Oil and Gas Questionnaire, and other information reviewed as part of this rule, EPA has not identified any existing offshore or coastal oil and gas extraction facilities which discharge SBF and SBF-cuttings to publicly owned treatment works (POTWs), nor are any new facilities projected to direct these wastes in such manner. EPA retains the zero discharge requirement that exists in the current pretreatment standards for existing and new sources for all coastal subcategory facilities because these wastes are incompatible and would interfere with POTW operations (see Coastal Development Document [EPA-821-R-96-023], Chapter XIV, Section 3.1.3). As current industry practice is zero discharge of SBFs and SBF-cuttings into POTWs, the zero discharge PSES and PSNS requirements represent current practice and is technologically and economically achievable with no additional NWQIs.

3.6 Best Management Practices (BMPs) to Demonstrate Compliance with Numeric BAT Limitations and NSPS for Drilling Fluid Associated with Drill Cuttings

Sections 304(e), 308(a), 402(a), and 501(a) of the CWA authorize the Administrator to prescribe BMPs as part of effluent limitations guidelines and standards or as part of a permit. The BMP alternatives to numeric limitations and standards in this final rule are directed, among other things, at preventing or otherwise controlling leaks, spills, and discharges of toxic and hazardous pollutants in SBF cuttings wastes.

As discussed in the NODA, EPA considered three options for the final rule for the BAT limitation and NSPS controlling SBF retained on discharged cuttings: (1) a single numeric discharge limitation with an accompanying compliance test method; (2) allowing operators to choose either a single numeric discharge limitation with an accompanying compliance test method, or as an alternative, a set of BMPs that employs limited cuttings monitoring; or (3) allowing operators to choose either a single numeric discharge limitation with an accompanying compliance test method or an alternative set of BMPs that employ no cuttings monitoring. Under the third BMP option for SBF-cuttings (i.e., cuttings discharged and not monitored), EPA also considered whether to require as part of the BMP option, the use of a cuttings dryer as representative of BAT/NSPS or to make the use of a cuttings dryer optional.

EPA selected the second BMP option (i.e., allowing operators to choose either a single numeric discharge limitation with an accompanying compliance test method, or as an alternative, a set of BMPs that employs limited cuttings monitoring). EPA selected this option as it provides for a reasonable level of flexibility and is based on quantifiable objective performance measures. EPA analyses show that cuttings monitoring for the first third of the SBF footage drilled for a SBF well interval is a reliable indicator of the remaining two-thirds of the SBF-interval.[18, 19, 20] Procedures for demonstrating compliance with the selected BMP option are given in Appendix 7 to Subpart A of Part 435.

For the final rule, EPA did not have enough data from across a wide variety of drilling conditions (e.g., formation, water depth, rig size) to demonstrate that BMPs without cuttings monitoring are equivalent to a numeric ROC limitation or standard. Further, under a BMP option with no numeric limit there is no objective performance measure. This presents a particular problem offshore, where real-time inspections are not as practical as they are for land-based discharges. Therefore, EPA rejected the third BMP option and cuttings dryer sub-option for SBF-cuttings (i.e., allowing operators to choose either a single numeric discharge limitation with an accompanying compliance test method or an alternative set of BMPs that employ no cuttings monitoring). EPA concluded that BMP option one and BMP option two demonstrate the same level of compliance with the well averaged ROC limitation and standard.[18] Therefore, EPA

selected BMP option two over BMP option one to provide operators with greater flexibility to demonstrate compliance with the well averaged ROC limitation and standard.

The BMP option promulgated in the final rule includes information collection requirements that are intended to control the discharges of SBF in place of numeric effluent limitations and standards. These information collection requirements include, for example: (1) training personnel; (2) analyzing spills that occur; (3) identifying equipment items that might need to be maintained, upgraded, or repaired; (4) identifying procedures for waste minimization; (4) performing monitoring (including the operation of monitoring systems) to establish equivalence with a numeric cuttings retention limitation and to detect leaks, spills, and intentional diversion; and (5) generally to periodically evaluate the effectiveness of the BMP alternatives.

BMP option two also requires operators to develop and, when appropriate, amend plans specifying how operators will implement BMP option two, and to certify to the permitting authority that they have done so in accordance with good engineering practices and the requirements of the final regulation. The purpose of those provisions is, respectively, to facilitate the implementation of BMP option two on a site-specific basis and to help the regulating authorities to ensure compliance without requiring the submission of actual BMP Plans. Finally, the recordkeeping provisions are intended to facilitate training, to signal the need for different or more vigorously implemented BMP alternatives, and to facilitate compliance assessment.

4. REFERENCES

1. Moran, Robert, National Ocean Industries Association, Re: National Ocean Industries Association, American Petroleum Institute, Offshore Operators Committee, and Petroleum Equipment Suppliers Association Comments on “Effluent Limitations Guidelines for Oil and Gas Extraction Point Source Category,” Proposed Rule 65 FR 21548 (April 21, 2000). 6/20/00. (Record No. IV.A.a.13)

2. Farmer, Janis M., BP Amoco, Letter to C. Johnston, EPA, in response to SBF NODA. 6/29/00. Attachment 4: QTEC “BMP” Reports, QTECH LTD Reports Ocean America and Discoverer 534. (Record No. IV.A.a.26)

3. Van Slyke, Don, Unocal. Unocal Comments; Effluent Limitations Guidelines for the Oil and Gas Extraction Point Source Category; Proposed Ruling (40 CFR 435). 6/9/00. (Record No. IV.A.a.3)

4. Xiao, L. and C. Piatti. 1995. Biodegradable Invert Oil Emulsion Drilling Fluids for Offshore Operations: A Comprehensive Laboratory Evaluation and Comparison, SPE 29941. (Record No. A.a.13)

5. Young, S, Anchor Drilling Fluids. 1994. Life After Oil Based Muds? - The Technical and Environmental Benefits of “Pseudo-Oil Based Muds.” (Record No. A.a.13)

6. Patel, A.D., J.M. Wilson, B.W. Loughridge. 1999. Impact of Synthetic-Based Drilling Fluids on Oilwell Cementing Operations, SPE 50726. (Record No. A.a.13)

7. Friedheim, J.E. and R.M. Pantermuehl, M-I Drilling Fluids. 1993. Superior Performance with Minimal Environmental Impact: A Novel Nonaqueous Drilling Fluid, SPE/IADC 25753. (Record No. A.a.13)

8. Friedheim, J.E. and H.L. Conn, M-I Drilling Fluids. 1995. Second Generation Synthetic Fluids in the North Sea: Are They Better? SPE 35061. (Record No. A.a.13)

9. Hall, John, Baroid Drilling Fluids, Re: Effluent Limitations Guidelines for the Oil and Gas Extraction Point Source Category; Proposed Rule 40 CFR Part 435 April 21, 2000. 6/19/00. (Record No. IV.A.a.7)

10. Candler, J.E., S.P. Rabke, A.J.J. Leuterman, Predicting the Potential Impact of Synthetic-Based Muds with the Use of Biodegradation Studies, SPE 52742, 1999. (Record No. IV.A.a.13, Attachment BIODEG-62)

11. Steber, J., C.-P. Ilerold and J.M. Limia. 1995. Comparative Evaluation of Anaerobic Biodegradability of Hydrocarbons and Fatty Derivatives Currently Used as Drilling Fluids. Chemoshpere, Vol. 31, No. 4, pp. 3105-3118. (Record No.I.D.b.26).

12. Candler, J., M-I Drilling Fluids. Email to C.A. Johnston RE: unit costs for various muds. 10/23/00. (Record No. IV.B.a.13)

13. Martin, D., Centrifugal Services, Inc., Letter to C. Johnston, EPA. 8/2/00. (Record No. IV.A.a.33).

14. Angelle, R. and P. Scott. 2000. Rig Survey Related to Installation Cost and Operational Costs of "Cuttings Dryers" to Reduce the Retention of Synthetic Based Mud on Cuttings Discharge. (Record No. IV.B.b.33)

15. Angelle, R. and P. Scott. 2000. Rig Survey Update Focusing on the Number of Rigs/Platforms Where Cuttings Dryers Could Not be Installed. Prepared by the Technology Assessment Workgroup of Synthetic Based Mud Research Consortium (API and NOIA) in Conjunction with Cuttings Dryer Equipment Vendor Representatives. 11/9/00. (Record No. IV.B.b.34)

16. O'Donnell, K., Unocal. 2000. Letter to M. Rubin, EPA transmitting additional information. 10/26/00. (Record IV.B.b.31)

17. Candler, J., M-I. Email to C. Johnston, EPA concerning ability of service companies to place cuttings dryers on rigs. 11/10/00. (Record No. IV.B.b.32)

18. EPA. 2000. Statistical Analyses Supporting Final Effluent Limitations Guidelines and Standards for Synthetic-Based Drilling Fluids and other Non-Aqueous Drilling Fluids in the Oil and Gas Extraction Point Source Category. EPA-821-B-00-015. (Record No. IV.C.a.3)

19. Hanni, G., J. Hartley, R. Monro, A. Skullerd. 1998. Evolutionary Environmental Management of Drilling Discharges: Results without Cost Penalty, SPE 46617. (Record No. III.B.a.18)

20. Farmer, J.M. 2000. Email to C. Johnston, EPA, Data for the SBM Notice of Data Availability. 3/8/00. (Record No. III.B.b.15)

21. Danenberger, E., MMS. Email to C. Johnston, EPA, FW: rig installation issue... 12/15/00. (Record No. IV.B.a.28)

22. Hurst, B. and J. Hurst, JB Equipment. Email to C. Johnston, EPA, RE: rig installation issues. 12/12/00. (Record No. IV.B.b.48)

CHAPTER XI

BEST MANAGEMENT PRACTICES

Sections 304(e), 308(a), 402(a), and 501(a) of the CWA authorize the Administrator to prescribe BMPs as part of effluent limitations guidelines and standards or as part of a permit. The use of BMPs, either as an alternative to or to reduce the sampling and analysis to demonstrate compliance with numeric limitations and standards of the final rule, are directed, among other things, at preventing or otherwise controlling leaks, spills, and discharges of toxic and hazardous pollutants in SBF cuttings wastes (see Chapter 7 for a list of the toxic and hazardous pollutants controlled by these BMPs). Typical BMPs for SBF-cuttings include regulating the flow and dispersion across solid control equipment screens and properly maintaining these screens.

As discussed in the April 2000 NODA (65 FR 21568), EPA considered three options for the final rule for the BAT limitation and NSPS controlling SBF retained on discharged cuttings: (1) a single numeric discharge limitation with an accompanying compliance test method; (2) allowing operators to choose either a single numeric discharge limitation with an accompanying compliance test method, or as an alternative, a set of BMPs that employs limited cuttings; or (3) allowing operators to choose either a single numeric discharge limitation with an accompanying compliance test method or an alternative set of BMPs that employ no cuttings monitoring. Under the third SBF-cuttings discharge BMP option (i.e., cuttings discharged and not monitored), EPA also considered whether to require as part of the BMP option, the use of a cuttings dryer as representative of BAT/NSPS or to make use of a cuttings dryer optional.

EPA has selected the second BMP option for the final rule (i.e., allowing operators to choose either a single numeric discharge limitation with an accompanying compliance test method for the entire well drilling, or as an alternative, a set of BMPs that employs limited cuttings monitoring to show compliance with the ROC numerical discharge limitation). EPA selected this option as it provides for a reasonable level of flexibility and is based on quantifiable performance measures. EPA analyses show that cuttings monitoring for the first third of the SBF footage drilled for a SBF well interval is a reliable indicator of the remaining two-thirds of the SBF-interval.[1, 2, 3] Procedures for demonstrating compliance with the selected BMP option are given in Appendix 7 to Subpart A of Part 435.

For the final rule, EPA did not have sufficient data from across a wide variety of drilling conditions (e.g., formation, water depth, rig size) to demonstrate that BMPs without cuttings monitoring are equivalent to a numeric ROC limitation or standard. EPA is also concerned that a set of BMPs without cuttings monitoring is not as objective to enforce. This is because with a numeric limitation or with the selected BMP option with reduced cuttings monitoring, operators will need to keep records demonstrating compliance with the numeric limitation. By contrast, under a BMP option with no numeric limit, there is no objective performance measure. This presents a particular problem offshore, where real-time inspections are not as practical as on land based industries.

Therefore, EPA rejected the third BMP option and cuttings dryer sub-option for SBF-cuttings (i.e., allowing operators to choose either a single numeric discharge limitation with an accompanying compliance test method or an alternative set of BMPs that employ no cuttings monitoring). EPA concluded that BMP option one and BMP option two demonstrate the same level of compliance with the well averaged ROC limitation and standard. Therefore, EPA selected BMP option two over BMP option one to provide operators with greater flexibility to demonstrate compliance with the well averaged ROC limitation and standard.

EPA is also promulgating a set of BMPs for operators to use that demonstrates compliance with the numeric ROC limitation and therefore reduces the retort monitoring otherwise required to determine compliance with the numeric ROC limitation. This option combines the set of BMPs that represent current practice with BMPs that are associated with the use of improved solids control technology. This option is technologically available and economically achievable for the same reasons that apply to compliance with the ROC numerical limitations. Examples of BMPs that represent current practices are, for example, use of mud guns, ensuring proper mixing procedure, and elimination of settling places for accumulated solids. Examples of BMPs associated with the use of the new solids control technology are, for example, operating cuttings dryers in accordance with the manufacturer's specifications and maintaining a certain mass flux. If operators elect to use this BMP option, they will be required to demonstrate compliance through limited retort monitoring of cuttings and additional BMP paperwork. Paperwork requirements are detailed in Appendix 7 of Subpart A of 40 CFR 435.

The BMP option promulgated in the final rule includes information collection requirements that are intended to control the discharges of SBF in place of numeric effluent limitations and standards. These information collection requirements include, for example: (1) training personnel; (2) analyzing spills that occur; (3) identifying equipment items that might need to be maintained, upgraded, or repaired; (4)

identifying procedures for waste minimization; (5) performing monitoring (including the operation of monitoring systems) to establish equivalence with a numeric cuttings retention limitation and to detect leaks, spills, and intentional diversion; and (6) generally to periodically evaluate the effectiveness of the BMP alternatives.

BMP option two also requires operators to develop and, when appropriate, amend plans specifying how operators will implement BMP option two, and to certify to the permitting authority that they have done so in accordance with good engineering practices and the requirements of the final regulation. The purpose of these provisions is, respectively, to facilitate the implementation of BMP option two on a site-specific basis and to help the regulating authorities ensure compliance without requiring the submission of actual BMP Plans. Finally, the recordkeeping provisions are intended to facilitate training, to signal the need for different or more vigorously implemented BMP alternatives, and to facilitate compliance assessment.

REFERENCES

1. EPA. 2000. Statistical Analyses Supporting Final Effluent Limitations Guidelines and Standards for Synthetic-Based Drilling Fluids and other Non-Aqueous Drilling Fluids in the Oil and Gas Extraction Point Source Category. EPA-821-B-00-015. (Record No. IV.C.a.3)

2. Hanni, G., J. Hartley, R. Monro, A. Skullerd. 1998. Evolutionary Environmental Management of Drilling Discharges: Results without Cost Penalty, SPE 46617. (Record No. III.B.a.18)

3. Farmer, J.M. 2000. Email to C. Johnston, EPA, Data for the SBM Notice of Data Availability. 3/8/00. (Record No. III.B.b.15)

GLOSSARY AND ABBREVIATIONS

Act: The Clean Water Act.

ADEC: Alaska Department of Environmental Conservation.

Administrator: Administrator of the U.S. Environmental Protection Agency

Agency: The U.S. Environmental Protection Agency.

Annular Injection: Injection of fluids into the space between the drill string or production tubing and the open hole or well casing.

Annulus or Annular Space: The space between the drill string or casing and the wall of the hole or casing.

AOGA: Alaskan Oil and Gas Association.

API: American Petroleum Institute.

ASTM: American Society of Testing and Materials.

Barite: Barium sulfate. An additive used to increase drilling fluid density.

Barrel (bbl): 42 United States gallons at 60 degrees Fahrenheit.

BAT: The best available technology economically achievable, under Section 304(b)(2)(B) of the Clean Water Act.

BADCT: The best available demonstrated control technology, for new sources under Section 306 of the Clean Water Act.

BCT: The best conventional pollutant control technology, under Section 301(b)(2)(E) of the Clean Water Act.

BMP: Best Management Practices under Section 304(e) of the Clean Water Act.

BOD: Biochemical oxygen demand.

BOE: Barrels of oil equivalent. Used to put oil production and gas production on a comparable volume basis. 1 BOE = 42 gallons of diesel and 1,000 scf of natural gas = 0.178 BOE.

BOP: Blowout Preventer

bpd: Barrels per day.

BPJ: Best Professional Judgment.

BPT: The best practicable control technology currently available, under section 304(b)(1) of the Clean Water Act.

bpy: Barrels per year.

Brine: Water saturated with or containing high concentrations of salts including sodium chloride, calcium chloride, zinc chloride, calcium nitrate, etc. Produced water is often called brine.

BTU: British Thermal Unit.

Casing: Large steel pipe used to "seal off" or "shut out" water and prevent caving of loose gravel formations when drilling a well. When the casings are set and cemented, drilling continues through and below the casing with a smaller bit. The overall length of this casing is called the casing string. More than one string inside the other may be used in drilling the same well.

CBI: Confidential Business Information.

Centrifuge: Filtration equipment that uses centrifugal force to separate substances of varying densities. A centrifuge is capable of spinning substances at high speeds to obtain high centrifugal forces. Also called the shake-out or grind-out machine.

cfd: cubic feet per day

CFR: Code of Federal Regulations.

Clean Water Act (CWA): The Federal Water Pollution Control Act of 1972 (33 U.S.C. 1251 et seq.), as amended by the Clean Water Act of 1977 (Pub. L. 95-217) and the Water Quality Act of 1987 (Pub. L. 100-4).

CO: Carbon Monoxide.

Completion: Activities undertaken to finish work on a well and bring it to productive status.

Condensate: Liquid hydrocarbons which are in the gaseous state under reservoir conditions but which become liquid either in passage up the hole or in the surface equipment.

Connate Water: Water that was laid down and entrapped with sedimentary deposits as distinguished from migratory waters that have flowed into deposits after they were laid down.

Conventional Pollutants: Constituents of wastewater as determined by Section 304(a)(4) of the Act, including, but not limited to, pollutants classified as biochemical oxygen demanding, suspended solids, oil and grease, fecal coliform, and pH.

Deck Drainage: All wastes resulting from platform washings, deck washings, spills, rainwater, and runoff from curbs, gutters, and drains, including drip pans and wash areas.

Depth Interval: Interval at which a drilling fluid system is introduced and used, such as from 2,200 to 2,800 ft.

Development Facility: Any fixed or mobile structure addressed by this document that is engaged in the drilling of potentially productive wells.

Dewatering Effluent: The wastewater derived from dewatering drill cuttings.

Diesel Oil: The grade of distillate fuel oil, as specified in the American Society for Testing and Materials' Standard Specification D975-81.

Disposal Well: A well through which water (usually salt water) is returned to subsurface formations.

DOE: Department of Energy

Domestic Waste: Materials discharged from sinks, showers, laundries, and galleys located within facilities addressed by this document. Included with these wastes are safety shower and eye wash stations, hand wash stations, and fish cleaning stations.

DMR: Discharge Monitoring Report.

Drill Cuttings: Particles generated by drilling into subsurface geologic formations and carried to the surface with the drilling fluid.

Drill Pipe: Special pipe designed to withstand the torsion and tension loads encountered in drilling.

Drilling Fluid: The circulating fluid (mud) used in the rotary drilling of wells to clean and condition the hole and to counterbalance formation pressure. A water-based drilling fluid is the conventional drilling fluid in which water is the continuous phase and the suspending medium for solids, whether or not oil is present. An oil-base drilling fluid has diesel, crude, or some other oil as its continuous phase with water as the dispersed phase.

Drilling Fluid System: System consisting primarily of mud storage tanks or pits, mud pumps, stand pipe, kelly hose, kelly, drill string, well annulus, mud return flowline, and solids separation equipment. The primary function of circulating the drilling fluid is to lubricate the drill bit, and to carry drill cuttings rock fragments from the bottom of the hole to the surface where they are separated out.

DWD: Deep-water development well.

DWE: Deep-water exploratory well.

Emulsion: A stable heterogenous mixture of two or more liquids (which are not normally dissolved in each other held in suspension or dispersion, one in the other, by mechanical agitation or, more frequently, by the presence of small amounts of substances known as emulsifiers. Emulsions may be oil-in-water, or water-in-oil.

Enhanced Mineral Oil-Based Drilling Fluid: A drilling fluid that has an enhanced mineral oil as its continuous phase with water as the dispersed phase. Enhanced mineral oil-based drilling fluids are a subset of non-aqueous drilling fluids.

ENR-CCI: Engineering News Record-Construction Indices.

EPA (or U.S. EPA): U.S. Environmental Protection Agency.

Exploratory Well: A well drilled either in search of an as-yet-undiscovered pool of oil or gas (a wildcat well) or to extend greatly the limits of a known pool. It involves a relatively high degree of risk. Exploratory wells may be classified as (1) wildcat, drilled in an unproven area; (2) field extension or step-out, drilled in an unproven area to extend the proved limits of a field; or (3) deep test, drilled within a field area but to unproven deeper zones.

Facility: See Produced Water Separation/Treatment Facility.

Field: A geographical area in which a number of oil or gas wells produce hydrocarbons from an underground reservoir. A field may refer to surface area only or to underground productive formations as well. A single field may have several separate reservoirs at varying depths.

Flocculation: The combination or aggregation of suspended solid particles in such a way that they form small clumps or tufts resembling wool.

Footprint: The square footage covered by various production equipment.

Formation: Various subsurface geological strata.

Formation Damage: Damage to the productivity of a well resulting from invasion of drilling fluid particles or other substances into the formation.

FR: Federal Register.

GC: Gas Chromatography.

GC/FID: Gas Chromatography with Flame Ionization Detection.

GC/MS: Gas Chromatography with Mass Spectroscopy Detection.

gph: Gallons per hour.

gpm: Gallons per minute.

hp: Horsepower.

Indirect Discharger: A facility that introduces wastewater into a publically owned treatment works.

Injection Well: A well through which fluids are injected into an underground stratum to increase reservoir pressure and to displace oil, or for disposal of produced water and other wastes.

Internal Olefin (IO): A series of isomeric forms of C_{16} and C_{18} alkenes.

kW: Kilowatt.

LC_{50}: The concentration of a test material that is lethal to 50% of the test organisms in a bioassay.

LDEQ: Louisiana Department of Environmental Quality.

Lease: A legal document executed between a landowner, as lessor, and a company or individual as lessee, that grants the right to exploit the premises for minerals; the instrument that creates a leasehold or working interest in minerals.

Linear Alpha Olefin (LAO): A series of isomeric forms of C_{14} and C_{16} monoenes.

m: Meters.

mcf: Thousand cubic feet.

µg/l: Micrograms per liter.

mg/l: Milligrams per liter.

MDL: Minimum detection limit

MM: Million.

MMcfd: Million cubic feet per day.

MMS: Department of Interior Minerals Management Service.

MMscf: Million standard cubic feet.

Mscf: Thousand standard cubic feet.

Mud: Common term for drilling fluid.

Mud Pit: A steel or earthen tank which is part of the surface drilling fluid system.

Mud Pump: A reciprocating, high pressure pump used for circulating drilling fluid.

NO_x: Nitrogen Oxide.

NODA: Notice of Data Availability (65 FR 21559)

Non-Aqueous Drilling Fluid: A drilling fluid in which the continuous phase is a water-immiscible fluid such as an oleaginous material (e.g., mineral oil, enhanced mineral oil, paraffinic oil, or synthetic material such as olefins and vegetable esters).

Nonconventional Pollutants: Pollutants that have not been designated as either conventional pollutants or priority pollutants.

NOIA: National Ocean Industries Association.

NOW: Nonhazardous Oilfield Waste.

NPDES: National Pollutant Discharge Elimination System.

NPDES Permit: A National Pollutant Discharge Elimination System permit issued under Section 402 of the Act.

NRDC: Natural Resources Defense Council, Incorporated.

NSPS: New source performance standards under Section 306 of the Act.

NWQEI: Non-water quality environmental impact.

O&M: Operating and maintenance.

OCS: Offshore Continental Shelf.

Oil-Based Drilling Fluid (OBF): A drilling fluid that has diesel oil, mineral oil, or some other oil, but neither a synthetic material nor enhanced mineral oil, as its continuous phase with water as the dispersed phase. Oil-based drilling fluids are a subset of non-aqueous drilling fluids.

Oil-based Pill: Mineral or diesel oil injected into the mud circulation system as a slug, for the purpose of freeing stuck pipe.

Offshore Development Document: U.S. EPA, Development Document for Effluent Limitations Guidelines and New Source Performance Standards for the Offshore Subcategory of the Oil and Gas Extraction Point Source Category, Final, EPA 821-R-93-003, January 1993.

Operator: The person or company responsible for operating, maintaining, and repairing oil and gas production equipment in a field; the operator is also responsible for maintaining accurate records of the amount of oil or gas sold, and for reporting production information to state authorities.

PAH: Polynuclear Aromatic Hydrocarbon.

Poly Alpha Olefin (PAO): A mix mainly comprised of a hydrogenated decene dimer $C_{20}H_{62}$ (95%), with lesser amounts of $C_{30}H_{62}$ (4.8%) and $C_{10}H_{22}$ (0.2%).

POTW: Publicly Owned Treatment Works.

ppm: parts per million.

PPA: Pollution Prevention Act of 1990.

Priority Pollutants: The 65 pollutants and classes of pollutants declared toxic under Section 307(a) of the Act.

Produced Sand: Slurried particles used in hydraulic fracturing and the accumulated formation sands and other particles that can be generated during production. This includes desander discharge from the produced water waste stream and blowdown of the water phase from the produced water treating system.

Produced Water: Water (brine) brought up from the hydrocarbon-bearing strata with the produced oil and gas. This includes brines trapped with the oil and gas in the formation, injection water, and any chemicals added downhole or during the oil/water separation process.

Produced Water Separation/Treatment Facilities: A "facility" is any group of tanks, pits, or other apparatus that can be distinguished by location, e.g., on-site/off-site or wetland/upland and/or by disposal stream (any produced water stream that is not recombined with other produced water streams for further treatment or disposal, but is further treated and/or disposed of separately). The facility may thus be, for example, an on-site tank battery, an off-site gathering center, or a commercial disposal operation. The primary focus is on treatment produced water, not on treating oil.

Production Facility: Any fixed or mobile facility that is used for active recovery of hydrocarbons from producing formations. The production facility begins operations with the completion phase.

PSES: Pretreatment Standards for Existing Sources of indirect dischargers, under Section 307(b) of the Act.

psi: pounds per square inch.

psig: pounds per square inch gauge.

PSNS: Pretreatment Standards for New Sources of indirect dischargers, under Section 307(b) and (c) of the Act.

RCRA: Resource Conservation and Recovery Act (Pub. L. 94-580) of 1976. Amendments to Solid Waste Disposal Act.

Recompletion: When additional drilling occurs at an existing well after the initial completion of the well and drilling waste is generated.

Reservoir: Each separate, unconnected body of a producing formation.

ROC: Retention (of drilling fluids) on cuttings.

Rotary Drilling: The method of drilling wells that depends on the rotation of a column of drill pipe with a bit at the bottom. A fluid is circulated to remove the cuttings.

RPE: Reverse Phase Extraction.

RRC: Railroad Commission of Texas.

Sanitary Waste: Human body waste discharged from toilets and urinals located within facilities addressed by this document.

scf: standard cubic feet.

Shut In: To close valves on a well so that it stops producing; said of a well on which the valves are closed.

SIC: Standard Industrial Classification.

SO_2: Sulfur dioxide.

SPP: Suspended particulate phase.

SWD: Shallow-water development well.

SWE: Shallow-water exploratory well.

Synthetic-Based Drilling Fluid (SBF): A drilling fluid that has a synthetic material as its continuous phase with water as the dispersed phase. Synthetic-based drilling fluids are a subset of non-aqueous drilling fluids.

Territorial Seas: The belt of the seas measured from the line of ordinary low water along that portion of the coast which is in direct contact with the open sea and the line marking the seaward limit of inland waters, and extending seaward a distance of 3 miles.

THC: Total hydrocarbons.

TSP: Total suspended particulates.

TSS: Total Suspended Solids.

TWC: Treatment, workover, and completion.

UIC: Underground Injection Control.

Upland Site: A site not located in a wetland area. May be an onshore site or a coastal site under the Chapman Line definition.

U.S.C.: United States Code.

USCG: United States Coast Guard.

USDW: Underground Sources of Drinking Water.

USGS: United States Geological Survey.

Vegetable Ester: A monoester of 2-ethylhexanol and saturated fatty acids with chain lengths in the range C_8 - $C_{16.}$

VOC: Volatile organic carbon

Water-Based Drilling Fluid (WBF): A drilling fluid in which water or a water miscible fluid is the continuous phase and the suspending medium for solids, whether or not oil is present.

Workover: The performance of one or more of a variety of remedial operations on a producing oilwell to try to increase production. Examples of workover jobs are deepening, plugging back, pulling and resetting liners, and squeeze cementing.

APPENDIX VII-1

SBF/OBF Model Well Drilling Waste Volumes

WORKSHEET No. 22:

Shallow Water Development Model Well Data: Discharged Cuttings Compostion Calculations

BPT 10.20% Overall Cuttings Retention Number of Discharged Cuttings Waste

Wastestreams from Prim. & Sec. Shakers & FRU	**lbs**	**bbl**
Total Cuttings Waste Discharged =	656,659	916.8
SBF Basefluid Discharged =	66,979	239.2
SBF Water Discharged =	28,502	81.3
SBF Barite Discharged =	47,028	31.2
Dry Drill Cuttings Discharged =	514,150	565.0
Adding formation oil to whole SBF (discharged with cuttings):		
	lbs	**bbls**
Whole SBF (discharged with cuttings) =	142,509	351.8
Formation Oil (discharged with cuttings) =	207	0.7
Whole SBF + Formation Oil =	142,716	352.5
SBF Basefluid Discharged + Formation Oil =	67,186	239.9

BAT/NSPS Option 1 4.03% Overall Cuttings Retention Number of Discharged Cuttings Waste

Wastestreams From Cuttings Dryer and FRU	**lbs**	**bbl**
Total Cuttings Waste Discharged =	562,370	684.0
SBF Basefluid Discharged =	22,664	80.9
SBF Water Discharged =	9,644	27.5
SBF Barite Discharged =	15,913	10.6
Dry Drill Cuttings Discharged =	514,150	565.0
Adding formation oil to whole SBF (discharged with cuttings):		
	lbs	**bbls**
Whole SBF (discharged with cuttings) =	48,220	119.0
Formation Oil (discharged with cuttings) =	70	0.2
Whole SBF + Formation Oil =	48,290	119.3
SBF Basefluid Discharged + Formation Oil =	22,734	81.2

BAT/NSPS Option 2 3.82% Overall Cuttings Retention Number of Discharged Cuttings Waste

Wastestream from Cuttings Dryer (Discharged)	**lbs**	**bbl**
Total Cuttings Waste Discharged =	545,499	660.2
SBF Basefluid Discharged =	20,838	74.4
SBF Water Discharged =	8,867	25.3
SBF Barite Discharged =	14,631	9.7
Dry Drill Cuttings Discharged =	501,163	550.7
Adding formation oil to whole SBF (discharged with cuttings):		
	lbs	**bbls**
Whole SBF (discharged with cuttings) =	44,336	109.4
Formation Oil (discharged with cuttings) =	64	0.2
Whole SBF + Formation Oil =	44,401	109.7
SBF Basefluid Discharged + Formation Oil =	20,902	74.6
Wastestream from FRU (Not Discharged)	**lbs**	**bbls**
Total Cuttings Waste Not Discharged =	16,871	23.8
SBF Basefluid Not Discharged =	1,805	6.4
SBF Water Not Discharged =	768	2.2
SBF Barite Not Discharged =	1,267	0.8
Dry Drill Cuttings Not Discharged =	13,030	14.3
Adding formation oil to whole SBF (not discharged with cuttings):		
	lbs	**bbls**
Whole SBF (not discharged with cuttings) =	3,841	9.5
Formation Oil (not discharged with cuttings) =	6	0.02
Whole SBF + Formation Oil (not discharged) =	3,846	9.50
SBF Basefluid Discharged + Formation Oil (not discharged) =	1,811	6.5

WORKSHEET No. 23:

Shallow Water Exploratory Model Well Data: Discharged Cuttings Compostion Calculations

BPT 10.20% Overall Cuttings Retention Number of Discharged Cuttings Waste

Wastestreams from Prim. & Sec. Shakers & FRU	**lbs**	**bbl**
Total Cuttings Waste Discharged =	1,376,078	1,921.1
SBF Basefluid Discharged =	140,360	501.3
SBF Water Discharged =	59,728	170.4
SBF Barite Discharged =	98,551	65.4
Dry Drill Cuttings Discharged =	1,077,440	1184.0
Adding formation oil to whole SBF (discharged with cuttings):		
	lbs	**bbls**
Whole SBF (discharged with cuttings) =	298,638	737.1
Formation Oil (discharged with cuttings) =	433	1.5
Whole SBF + Formation Oil =	299,072	738.6
SBF Basefluid Discharged + Formation Oil =	140,793	502.8

BAT/NSPS Option 1 4.03% Overall Cuttings Retention Number of Discharged Cuttings Waste

Wastestreams From Cuttings Dryer and FRU	**lbs**	**bbl**
Total Cuttings Waste Discharged =	1,178,489	1,433.4
SBF Basefluid Discharged =	47,493	169.6
SBF Water Discharged =	20,210	57.7
SBF Barite Discharged =	33,346	22.1
Dry Drill Cuttings Discharged =	1,077,440	1184.0
Adding formation oil to whole SBF (discharged with cuttings):		
	lbs	**bbls**
Whole SBF (discharged with cuttings) =	101,049	249.4
Formation Oil (discharged with cuttings) =	147	0.5
Whole SBF + Formation Oil =	101,196	249.9
SBF Basefluid Discharged + Formation Oil =	47,640	170.1

BAT/NSPS Option 2 3.82% Overall Cuttings Retention Number of Discharged Cuttings Waste

Wastestream from Cuttings Dryer (Discharged)	**lbs**	**bbl**
Total Cuttings Waste Discharged =	1,143,135	1,383.4
SBF Basefluid Discharged =	43,668	156.0
SBF Water Discharged =	18,582	53.0
SBF Barite Discharged =	30,660	20.4
Dry Drill Cuttings Discharged =	1,050,224	1154.1
Adding formation oil to whole SBF (discharged with cuttings):		
	lbs	**bbls**
Whole SBF (discharged with cuttings) =	92,910	229.3
Formation Oil (discharged with cuttings) =	135	0.5
Whole SBF + Formation Oil =	93,045	229.8
SBF Basefluid Discharged + Formation Oil =	43,803	156.4
Wastestream from FRU (Not Discharged)	**lbs**	**bbls**
Total Cuttings Waste Not Discharged =	35,355	49.9
SBF Basefluid Not Discharged =	3,783	13.5
SBF Water Not Discharged =	1,610	4.6
SBF Barite Not Discharged =	2,656	1.8
Dry Drill Cuttings Not Discharged =	27,306	30.0
Adding formation oil to whole SBF (not discharged with cuttings):		
	lbs	**bbls**
Whole SBF (not discharged with cuttings) =	8,049	19.9
Formation Oil (not discharged with cuttings) =	12	0.04
Whole SBF + Formation Oil (not discharged) =	8,061	19.91
SBF Basefluid Discharged + Formation Oil (not discharged) =	3,795	13.6

WORKSHEET No. 24:

Deep Water Development Model Well Data: Discharged Cuttings Compostion Calculations

BPT 10.20% Overall Cuttings Retention Number of Discharged Cuttings Waste

Wastestreams from Prim. & Sec. Shakers & FRU	**lbs**	**bbl**
Total Cuttings Waste Discharged =	993,705	1,387.3
SBF Basefluid Discharged =	101,358	362.0
SBF Water Discharged =	43,131	123.1
SBF Barite Discharged =	71,166	47.3
Dry Drill Cuttings Discharged =	778,050	855.0
Adding formation oil to whole SBF (discharged with cuttings):		
	lbs	**bbls**
Whole SBF (discharged with cuttings) =	215,655	532.3
Formation Oil (discharged with cuttings) =	313	1.1
Whole SBF + Formation Oil =	215,968	533.4
SBF Basefluid Discharged + Formation Oil =	101,671	363.1

BAT/NSPS Option 1 4.03% Overall Cuttings Retention Number of Discharged Cuttings Waste

Wastestreams From Cuttings Dryer and FRU	**lbs**	**bbl**
Total Cuttings Waste Discharged =	851,020	1,035.1
SBF Basefluid Discharged =	34,296	122.5
SBF Water Discharged =	14,594	41.6
SBF Barite Discharged =	24,080	16.0
Dry Drill Cuttings Discharged =	778,050	855.0
Adding formation oil to whole SBF (discharged with cuttings):		
	lbs	**bbls**
Whole SBF (discharged with cuttings) =	72,970	180.1
Formation Oil (discharged with cuttings) =	106	0.4
Whole SBF + Formation Oil =	73,076	180.5
SBF Basefluid Discharged + Formation Oil =	34,402	122.8

BAT/NSPS Option 2 3.82% Overall Cuttings Retention Number of Discharged Cuttings Waste

Wastestream from Cuttings Dryer (Discharged)	**lbs**	**bbl**
Total Cuttings Waste Discharged =	825,490	999.0
SBF Basefluid Discharged =	31,534	112.6
SBF Water Discharged =	13,419	38.3
SBF Barite Discharged =	22,141	14.7
Dry Drill Cuttings Discharged =	758,397	833.4
Adding formation oil to whole SBF (discharged with cuttings):		
	lbs	**bbls**
Whole SBF (discharged with cuttings) =	67,093	165.6
Formation Oil (discharged with cuttings) =	97	0.3
Whole SBF + Formation Oil =	67,190	165.9
SBF Basefluid Discharged + Formation Oil =	31,631	113.0
Wastestream from FRU (Not Discharged)	**lbs**	**bbls**
Total Cuttings Waste Not Discharged =	25,531	36.0
SBF Basefluid Not Discharged =	2,732	9.8
SBF Water Not Discharged =	1,162	3.3
SBF Barite Not Discharged =	1,918	1.3
Dry Drill Cuttings Not Discharged =	19,718	21.7
Adding formation oil to whole SBF (not discharged with cuttings):		
	lbs	**bbls**
Whole SBF (not discharged with cuttings) =	5,812	14.3
Formation Oil (not discharged with cuttings) =	8	0.03
Whole SBF + Formation Oil (not discharged) =	5,821	14.38
SBF Basefluid Discharged + Formation Oil (not discharged) =	2,740	9.8

WORKSHEET No. 25:

Deep Water Exploratory Model Well Data: Discharged Cuttings Compostion Calculations

BPT 10.20% Overall Cuttings Retention Number of Discharged Cuttings Waste

Wastestreams from Prim. & Sec. Shakers & FRU	**lbs**	**bbl**
Total Cuttings Waste Discharged =	2,209,396	3,084.5
SBF Basefluid Discharged =	225,358	804.9
SBF Water Discharged =	95,897	273.6
SBF Barite Discharged =	158,230	105.1
Dry Drill Cuttings Discharged =	1,729,910	1901.0
Adding formation oil to whole SBF (discharged with cuttings):		
	lbs	**bbls**
Whole SBF (discharged with cuttings) =	479,486	1183.5
Formation Oil (discharged with cuttings) =	696	2.4
Whole SBF + Formation Oil =	480,182	1185.9
SBF Basefluid Discharged + Formation Oil =	226,054	807.2

BAT/NSPS Option 1 4.03% Overall Cuttings Retention Number of Discharged Cuttings Waste

Wastestreams From Cuttings Dryer and FRU	**lbs**	**bbl**
Total Cuttings Waste Discharged =	1,892,152	2,301.5
SBF Basefluid Discharged =	76,254	272.3
SBF Water Discharged =	32,448	92.6
SBF Barite Discharged =	53,540	35.6
Dry Drill Cuttings Discharged =	1,729,910	1901.0
Adding formation oil to whole SBF (discharged with cuttings):		
	lbs	**bbls**
Whole SBF (discharged with cuttings) =	162,242	400.5
Formation Oil (discharged with cuttings) =	235	0.8
Whole SBF + Formation Oil =	162,477	401.3
SBF Basefluid Discharged + Formation Oil =	76,489	273.1

BAT/NSPS Option 2 3.82% Overall Cuttings Retention Number of Discharged Cuttings Waste

Wastestream from Cuttings Dryer (Discharged)	**lbs**	**bbl**
Total Cuttings Waste Discharged =	1,835,387	2,221.2
SBF Basefluid Discharged =	70,112	250.4
SBF Water Discharged =	29,835	85.1
SBF Barite Discharged =	49,227	32.7
Dry Drill Cuttings Discharged =	1,686,213	1853.0
Adding formation oil to whole SBF (discharged with cuttings):		
	lbs	**bbls**
Whole SBF (discharged with cuttings) =	149,174	368.2
Formation Oil (discharged with cuttings) =	217	0.7
Whole SBF + Formation Oil =	149,391	368.9
SBF Basefluid Discharged + Formation Oil =	70,328	251.1
Wastestream from FRU (Not Discharged)	**lbs**	**bbls**
Total Cuttings Waste Not Discharged =	56,765	80.1
SBF Basefluid Not Discharged =	6,074	21.7
SBF Water Not Discharged =	2,585	7.4
SBF Barite Not Discharged =	4,265	2.8
Dry Drill Cuttings Not Discharged =	43,842	48.2
Adding formation oil to whole SBF (not discharged with cuttings):		
	lbs	**bbls**
Whole SBF (not discharged with cuttings) =	12,923	31.9
Formation Oil (not discharged with cuttings) =	19	0.06
Whole SBF + Formation Oil (not discharged) =	12,942	31.96
SBF Basefluid Discharged + Formation Oil (not discharged) =	6,093	21.8

WORKSHEET No. 26:
Summary Model Well Volume Data

Waste Component	Shallow Water (1,000 ft)				Deep Water (>1,000 ft)			
	Development		Exploratory		Development		Exploratory	
	bbls	lbs	bbls	lbs	bbls	lbs	bbls	lbs
BPT (10.20% Cuttings Retention)								
SBF Basefluid Discharged	239.2	66,979	501.3	140,360	362.0	101,358	804.9	225,358
SBF Water Discharged	81.3	28,502	170.4	59,728	123.1	43,131	273.6	95,897
SBF Barite Discharged	31.2	47,028	65.4	98,551	47.3	71,166	105.1	158,230
Dry Drill Cuttings Discharged	565.0	514,150	1184.0	1,077,440	855.0	778,050	1901.0	1,729,910
Dry Drill Cut. + SBF Discharged	916.8	656,659	1921.1	1,376,078	1387.3	993,705	3084.5	2,209,396
SBF Discharged	351.8	142,509	737.1	298,638	532.3	215,655	1183.5	479,486
Formation Oil Discharged	0.7	207	1.5	433	1.1	313	2.4	696
Total Discharge - Water *	836	628,364	1,752	1,316,784	1265.3	950,887	2813.3	2,114,195
BAT/NSPS Option 1 (4.03% Cuttings Retention)								
SBF Basefluid Discharged	80.9	22,664	169.6	47,493	122.5	34,296	272.3	76,254
SBF Water Discharged	27.5	9,644	57.7	20,210	41.6	14,594	92.6	32,448
SBF Barite Discharged	10.6	15,913	22.1	33,346	16.0	24,080	35.6	53,540
Dry Drill Cuttings Discharged	565.0	514,150	1184.0	1,077,440	855.0	778,050	1901.0	1,729,910
Dry Drill + SBF Discharged	684.0	562,370	1433.4	1,178,489	1035.1	851,020	2301.5	1,892,152
SBF Discharged	119.0	48,220	249.4	101,049	180.1	72,970	400.5	162,242
Formation Oil Discharged	0.2	70	0.5	147	0.4	106	0.8	235
Total Discharge - Water *	657	552,796	1,376	1,158,426	993.8	836,532	2209.7	1,859,939

** Used in "Regional Summary" and "NSPS Regional Summary" Worksheets*

Waste Component	Shallow Water (1,000 ft)				Deep Water (>1,000 ft)			
	Development		Exploratory		Development		Exploratory	
	bbls	lbs	bbls	lbs	bbls	lbs	bbls	lbs
BAT/NSPS Option 2 (3.82% Cuttings Retention) Discharge Wastes								
SBF Basefluid Discharged	74.4	20,838	156.0	43,668	112.6	31,534	250.4	70,112
SBF Water Discharged	25.3	8,867	53.0	18,582	38.3	13,419	85.1	29,835
SBF Barite Discharged	9.7	14,631	20.4	30,660	14.7	22,141	32.7	49,227
Dry Drill Cuttings Discharged	550.7	501,163	1154.1	1,050,224	833.4	758,397	1853.0	1,686,213
Dry Drill + SBF Discharged	660.2	545,499	1383.4	1,143,135	999.0	825,490	2221.2	1,835,387
SBF Discharged	109.4	44,336	229.3	92,910	165.6	67,093	368.2	149,174
Formation Oil Discharged	0.2	64	0.5	135	0.3	97	0.7	217
Total Discharge - Water *	635	536,696	1,331	1,124,687	961.1	812,169	2136.8	1,805,769
Zero Discharge Wastes								
SBF Basefluid Not Discharged	6.4	1,805	13.5	3,783	9.8	2,732	21.7	6,074
SBF Water Not Discharged	2.2	768	4.6	1,610	3.3	1,162	7.4	2,585
SBF Barite Not Discharged	0.8	1,267	1.8	2,656	1.3	1,918	2.8	4,265
Dry Drill Cuttings Not Disch.	14.3	13,030	30.0	27,306	21.7	19,718	48.2	43,842
Dry Drill + SBF Not Discharged	23.8	16,871	49.9	35,355	36.0	25,531	80.1	56,765
SBF Not Discharged	9.5	3,841	19.9	8,049	14.3	5,812	31.9	12,923
Formation Oil Not Discharged	0.0	6	0.0	12	0.0	8	0.1	19

** Used in "Regional Summary" and "NSPS Regional Summary" Worksheets*

Total Discharge - Water *	SWD	SWE	DWD	DWE
Baseline	628,364	1,316,784	950,887	2,114,195
BAT 1	552,796	1,158,426	836,532	1,859,939
BAT 2	536,696	1,124,687	812,169	1,805,769
BAT 3	628,364	1,316,784	950,887	2,114,195

Summary Model Well Pollutant Data

	%	lbs	%	lbs	%	lbs	%	lbs
Priority metals (from barite)		24.7		51.8		0.0		0.0
Non-conventionals (from barite)		28,805		-		-		-
Priority organics (from SBF+oil)		1.002		0.000		0.000		0.000
Non-conventionals (from SBF+oil)		29.6		-		-		-
Priority metals	0.0856%	24.7	0.1793%	51.8	0.0000%	-	0.0000%	-
Priority organics	0.00347%	1.002	0.00000%	-	0.00000%	-	0.00000%	-
Total Priority Pollutants	0.0890%	25.7	0.1793%	51.8	0.0000%	-	0.0000%	-
Non-conventionals	99.82%	28,835	0.00%	-	0.00%	-	0.00%	-
Total		28,886		104		-		-

APPENDIX VII-2

WBF Waste Volume and Characteristics

WORKSHEET No. B:

ANALYSIS OF WBF PASS/FAIL PERMIT LIMITS (SHEEN; TOXICITY); FAILS HAULED TO ONSHORE DISPOSAL(a,b,c)

			% Wells/region Shallow/deep % split	No lube /lube % split	No spot /spot % split	Proj'd Tox / Sheen Limit Failure Rate	Proj'd % Wells Fail Permit Lim	Proj'd % Wells Pass Permit Lim	Sum lubes(l) spot(s), or l+s that Pass
Gulf of Mexico									
shallow	(51% GOM wells)	=	51.00%						
shallow, no lube	(51% * 88% all wells)	=		44.88%					
shallow, no lube, no spot	(44.88% * 78% all wells do not use spot)	=			35.01%	1.0%	0.350%	34.66%	
shallow, no lube, + spot	(44.88% * 22% all wells need spot)	=			9.87%	33.0%	3.258%	6.62%	
shallow, + lube	(51% * 12% all wells)	=		6.12%					
shallow, + lube, no spot	(6.12% * 78% all wells do not use spot)	=			4.77%	33.0%	1.575%	3.20%	
shallow, + lube, + spot	(6.12% * 22% all wells need spot)	=			1.35%	56.0%	0.754%	0.59%	10.41%
total % shallow wells							5.940%	45.06%	
deep	(49% GOM wells)	=	49.00%						
deep, OBF (no discharge)	(15% of deep wells)	=	7.35%			100%	7.35%	0.00%	
deep, WBF (discharge)	(85% of deep wells)	=	41.65%						
deep, no lube	(49% * 88% all wells)	=		36.65%					
deep, no lube, no spot	(43.12% * 78% all wells do not use spot)	=			28.59%	1.0%	0.286%	28.30%	
deep, no lube, + spot	(43.12% * 22% all wells need spot)	=			8.06%	33.0%	2.661%	5.40%	
deep, + lube	(49% * 12% all wells)	=		5.00%					
deep, + lube, no spot	(6.12% * 78% all wells do not use spot)	=			3.90%	33.0%	1.286%	2.61%	
deep, + lube, + spot	(6.12% * 22% all wells need spot)	=			1.10%	56.0%	0.616%	0.48%	8.50%
total % deep wells				41.65%	41.65%		12.20%	36.80%	
California									
shallow	(58% CA wells)	=	58.00%						
shallow, no lube	(58% * 88% all wells)	=		51.04%					
shallow, no lube, no spot	(51.04% * 78% all wells do not use spot)	=			39.81%	1.0%	0.398%	39.41%	
shallow, no lube, + spot	(51.04% * 22% all wells need spot)	=			11.23%	33.0%	3.706%	7.52%	
shallow, + lube	(58% * 12% all wells)	=		6.96%					
shallow, + lube, no spot	(6.96% * 78% all wells do not use spot)	=			5.43%	33.0%	1.792%	3.64%	
shallow, + lube, + spot	(6.96% * 22% all wells need spot)	=			1.53%	56.0%	0.857%	0.67%	11.83%
total % shallow wells							6.753%	51.25%	
deep	(42% CA wells)	=	42.00%						
deep, OBF (no discharge)	(15% of deep wells)	=	6.30%			100%	6.30%	0.00%	
deep, WBF (discharge)	(85% of deep wells)	=	35.70%						
deep, no lube	(42% * 88% all wells)	=		31.42%					
deep, no lube, no spot	(36.96% * 78% all wells do not use spot)	=			24.50%	1.0%	0.245%	24.26%	
deep, no lube, + spot	(36.96% * 22% all wells need spot)	=			6.91%	33.0%	2.281%	4.63%	
deep, + lube	(42% * 12% all wells)	=		4.28%					
deep, + lube, no spot	(3.93% * 78% all wells do not use spot)	=			3.34%	33.0%	1.103%	2.24%	
deep, + lube, + spot	(3.93% * 22% all wells need spot)	=			0.94%	56.0%	0.528%	0.41%	7.28%
total % deep wells				35.70%	35.70%		10.46%	31.54%	
Alaska									
shallow	(41% AK wells)	=	41.00%						
shallow, no lube	(41% * 88% all wells)	=		36.08%					
shallow, no lube, no spot	(36.08% * 78% all wells do not use spot)	=			28.14%	1.0%	0.281%	27.86%	
shallow, no lube, + spot	(36.08% * 22% all wells need spot)	=			7.94%	33.0%	2.619%	5.32%	
shallow, + lube	(41% * 12% all wells)	=		4.92%					
shallow, + lube, no spot	(4.92% * 78% all wells do not use spot)	=			3.84%	33.0%	1.266%	2.57%	
shallow, + lube, + spot	(4.92% * 22% all wells need spot)	=			1.08%	56.0%	0.606%	0.48%	8.37%
total % shallow wells							4.773%	36.23%	
deep	(59% AK wells)	=	59.00%						
deep, OBF (no discharge)	(15% of deep wells)	=	8.85%			100%	8.85%	0.00%	
deep, WBF (discharge)	(85% of deep wells)	=	50.15%						
deep, no lube	(59% * 88% all wells)	=		44.13%					
deep, no lube, no spot	(51.92% * 78% all wells do not use spot)	=			34.42%	1.0%	0.344%	34.08%	
deep, no lube, + spot	(51.92% * 22% all wells need spot)	=			9.71%	33.0%	3.204%	6.51%	
deep, + lube	(59% * 12% all wells)	=		6.02%					
deep, + lube, no spot	(7.08% * 78% all wells do not use spot)	=			4.69%	33.0%	1.549%	3.15%	
deep, + lube, + spot	(7.08% * 22% all wells need spot)	=			1.32%	56.0%	0.741%	0.58%	10.23%
total % deep wells				50.15%	50.15%		14.69%	44.31%	

(a) Percentage Distribution of Water-based Drilling Fluid Types, (no oil, +MO lube, +MO spot, or +MO lube & spot)
(b) Cells shaded in blue are data input from ODD: Table XI-10, p XI-17; other percentages shown are derived from these input values)
(c) The terms "shallow" and "deep" as used in the offshore effluent limitaiton guideline do NOT have the same meaning as the same terms as used in the synthetics effluent guideline; these terms in the offshore rule refers to the relative target depth of the well, whereas in the synthetics rule they refer to the water depth in which operations occur.

WORKSHEET No. C: **POLLUTANT LOADINGS FROM WATER-BASED DRILLING FLUID: WELL DEPTHS AND VOLUMES OF DISCHARGED CUTTINGS AND DRILLING FLUIDS**

		GOM	CA	AK	GOM	CA	AK
		Shallow Well			Deep Well		
(from ODD: Table XI-2, p XI-4)	well depth, TD	10,559	7,607	10,633	13,037	10,082	12,354
	cuttings discharged , bbl per well	1,475	1,242	1,480	2,458	1,437	2,413
(from ODD: Table XI-2, p XI-4)	drilling fluids (bbl) per well	6,938	5,939	6,963	9,752	6,777	9,458

Current Well Counts, SBF Effluent Limitations Guideline (see "Well Count Input Sheet," this file)

		EXISTING SOURCES, WBF Wells				NEW SOURCES, WBF Wells				
Est'd % WBF > SBF		GOM	CA	AK	Subtotal	GOM	CA	AK	Subtotal	Total
Baseline	0%	857.0	5	4	866	38	0	0	38	904
BAT 1	6%	803.0	5	4	812	35	0	0	35	847
BAT 2	6%	803.0	5	4	812	35	0	0	35	847

WBF/Water Phase Composition/Contribution to Toxic/Non-conventional Pollutant Loadings, Offshore Record

(from ODD: Table XI-3, p XI-5 and Table XI-6, p XI-9)

Drilling Fuids	Composition, lbs/bbl	Total nonC+toxics+Ba	
barite	98	384,792	mg/kg dry
kg/bbl tox+non-Conv		17.1	kg/bbl
lb/bbl tox+non-Conv		**37.7**	**lb/bbl**
mineral oil	9	2.9	lb/bbl
TSS	153	153.0	lb/bbl

(fromODD, p XI-6)

Cuttings			
Density		543	lbs/bbl
Adherent mud	5.0%		
Mud TSS	153		lb/bbl
Ad'nt mud TSS		7.7	lb/bbl
Total TSS per bbl cuttings		551	lb/bbl

WBF/ Mineral Oil Phase Contribution to Toxic/Non-conventional Pollutant Loadings

(from ODD: Table XI-5, p XI-7)

MO (9 lb/bbl)	30.51	mg nonconventionals/ml MO:	0.14700	kg/bbl	on-conventional = 99.8%
	0.05	mg toxics/ml MO,	0.00024	kg/bbl	toxics = 0.2%
kg toxic+Non-conventional Pollutants per bbl MO			0.147	kg/bbl	
lbs toxic + Non-conventional Pollutants per bbl MO			0.324	lb/bbl	

461	: b/bbl mud
11.0	: lb/gal mud
2.1	: gal of 5% mud
23.1	: wt of 5% mud
543	: lb/bbl cuttings
566	: lb/bbl wet cuttings

APPENDIX VIII-1

Derivation of Supply Boat Transport Days

SUPPLY BOAT FREQUENCY WORKSHEET
(Zero discharge)

Assumptions:
1. Cuttings box capacity = 25 bbl
2. Dedicated supply boat capacity = 80 boxes
3. Regularly scheduled supply boat arrives at rig every 4 days
4. Regularly scheduled supply boat capacity = 12 boxes
5. Supply boat speed = 11.5 miles per hour
6. Platform/rig cuttings storage capacity = 12 boxes
7. Total roundtrip distance for dedicated supply boat = 277 miles
   (Port to rig = 100 mi.; rig to disposal terminal = 117 mi.; terminal to port = 60 mi.)
8. Incremental mileage for regularly scheduled supply boat = 77 miles
   (Total roundtrip - regular port to rig roundtrip = 277 - 200 = 77 mi.)
9. Supply boat maneuvering time at rig = 1hr per trip
10. Additional boat idling at rig due to potential delays = 1.6 hrs per trip
11. Supply boat in-port unloading time and demurrage = 24 hrs per trip
12. Truck capacity = 119 bbls
13. Roundtrip trucking distance from port to disposal facility = 20 miles

Deep Water Development Model Wells

Waste volume generated = 1,387.3 bbl
Number of boxes of waste generated = 1387/25 = 56 boxes
Number of days to drill model well = 7.9 days
Number of supply boat trips = 1 dedicated trip

Number of days for supply boat:
(277 mi/11.5 mi per hr) + (1 hr maneuvering) + (1.6 hrs add. idling at rig) + (186.9 hrs loading) + (24 hr demurrage) = 237.59 hrs = 9.90 days

Number of truck roundtrips = 1387/119 = 12 trips
Total truck miles = 12 * 20 = 240 mi.

Deep Water Exploratory Model Wells

Waste volume generated = 3,084.5 bbl
Number of boxes of waste generated = 3085/25 = 124 boxes
Number of days to drill model well = 17.5 days
Number of supply boat trips = 2 dedicated trips; 1 regularly scheduled trip

Number of days for first dedicated supply boat:
(277 mi/11.5 mi per hr) + (1 hr maneuvering) + (1.6 hrs add. idling at rig) + (209.1 hrs loading) + (24 hr demurrage) = 259.79 hrs = 10.82 days

Number of days for regularly scheduled supply boat:

(77 mi/11.5 mi per hr) + (1 hr maneuvering) + (1.6 hrs add. idling at rig) + (4 hrs loading) + (24 hr demurrage) = 37.30 hrs = 1.55 days

Number of days for second dedicated supply boat:
(277 mi/11.5 mi per hr) + (1 hr maneuvering) + (1.6 hrs add. idling at rig) + (199.39 hrs loading) + (24 hr demurrage) = 250.08 hrs = 10.42 days

Supply boat days = 21.24 days for dedicated + 1.55 days for regularly scheduled = 22.79 days

Number of truck roundtrips = 3084.5/119 = 26 trips
Total truck miles = 26 * 20 = 520 mi.

Shallow Water Development Model Wells

Waste volume generated = 916.8 bbl
Number of boxes of waste generated = 917/25 = 37 boxes
Number of days to drill model well = 5.2 days
Number of supply boat trips = 1 dedicated trip

Number of days for supply boat:
(277 mi/11.5 mi per hr) + (1 hr maneuvering) + (1.6 hrs add. idling at rig) + (124.8 hrs loading) + (24 hr demurrage) = 175.49 hrs = 7.31 days

Number of truck roundtrips = 917/119 = 8 trips
Total truck miles = 8 * 20 = 160 mi.

Shallow Water Exploratory Model Wells

Waste volume generated = 1,921.1 bbl
Number of boxes of waste generated = 1921/25 = 77 boxes
Number of days to drill model well = 10.9 days
Number of supply boat trips = 1 dedicated trip; 1 regularly scheduled trip

Number of days for supply boat:
(277 mi/11.5 mi per hr) + (1 hr maneuvering) + (1.6 hrs add. idling at rig) + (252.43 hrs loading) + (24 hr demurrage) = 303.12 hrs = 12.63 days

Number of days for regularly scheduled supply boat:
(77 mi/11.5 mi per hr) + (1 hr maneuvering) + (1.6 hrs add. idling at rig) + (4hr loading) + (24 hr demurrage) = 37.30 hrs = 1.55 days

Supply boat days = 12.63 days for dedicated + 1.55 days for regularly scheduled = 14.18 days

Number of truck roundtrips = 1921/119 = 17 trips
Total truck miles = 17 * 20 = 340 mi.

OFFSHORE CALIFORNIA

<u>Assumptions:</u>
1. Cuttings box capacity = 25 bbl

2. Dedicated supply boat capacity = 80 boxes
3. Supply boat speed = 11.5 miles per hour
4. Platform/rig cuttings storage capacity = 12 boxes
5. Total roundtrip distance for dedicated supply boat = 200 miles
   (Port to rig = 100 mi)
6. Supply boat maneuvering time at rig = 1hr per trip
7. Additional boat idling at rig due to potential delays = 1.6 hrs per trip
8. Supply boat in-port unloading time and demurrage = 24 hrs per trip
9. Truck capacity = 50 bbls
10. Roundtrip trucking distance from port to disposal facility = 300 miles

Deep Water Development Model Wells

Waste volume generated = 1,387.3 bbl
Number of boxes of waste generated = 1387.3/25 = 56 boxes
Number of days to drill model well = 7.9 days
Number of supply boat trips = 1 dedicated trip

Number of days for supply boat:
(200 mi/11.5 mi per hr) + (1 hr maneuvering) + (1.6 hrs add. idling at rig) + (186.9hrs loading) + (24 hr demurrage) = 230.9 hrs = 9.62 days

Number of truck roundtrips = 1387.3/50 = 28 trips
Total truck miles = 28 * 300 = 8400 mi.

Shallow Water Development Model Wells

Waste volume generated = 916.8 bbl
Number of boxes of waste generated = 917/25 = 37 boxes
Number of days to drill model well = 5.2 days
Number of supply boat trips = 1 dedicated trip

Number of days for supply boat:
(200 mi/11.5 mi per hr) + (1 hr maneuvering) + (1.6 hrs add. idling at rig) + (122hrs loading) + (24 hr demurrage) = 166.1 hrs = 6.92 days

Number of truck roundtrips = 917/50 = 19 trips
Total truck miles = 19 * 300 = 5700 mi.

SUPPLY BOAT FREQUENCY WORKSHEET
(Discharge cuttings with 3.82% SBF retention; zero discharge of fines)

GULF OF MEXICO

Assumptions:

1. Cuttings box capacity = 25 bbl
2. Dedicated supply boat capacity = 80 boxes
3. Regularly scheduled supply boat arrives at rig every 4 days
4. Regularly scheduled supply boat capacity = 12 boxes
5. Supply boat speed = 11.5 miles per hour
6. Platform/rig cuttings storage capacity = 12 boxes
7. Incremental mileage for regularly scheduled supply boat = 77 miles
   (Total roundtrip - regular port to rig roundtrip = 277 - 200 = 77 mi.)
8. Supply boat maneuvering time at rig = 1hr per trip
9. Additional boat idling at rig due to potential delays = 1.6 hrs per trip
10. Supply boat in-port unloading time and demurrage = 24 hrs per trip
11. Truck capacity = 119 bbls
12. Roundtrip trucking distance from port to disposal facility = 50 miles

Deep Water Development Model Wells

Waste volume generated = 23.8 bbl
Number of boxes of waste generated = 23.8/25 = 1 box
Number of days to drill model well = 7.9 days
Number of supply boat trips = 1 regularly scheduled trip

Number of days for supply boat:
(77 mi/11.5 mi per hr) + (1 hr maneuvering) + (1.6 hrs add. idling at rig) + (0.1 hrs loading) + (24 hr demurrage) = 33.30 hrs = 1.40 days

Number of truck roundtrips = 23.8/119 = 1 trip
Total truck miles = 1 * 50 = 50 mi.

Deep Water Exploratory Model Wells

Waste volume generated = 49.9 bbl
Number of boxes of waste generated = 49.9/25 = 2 boxes
Number of days to drill model well = 17.5 days
Number of supply boat trips = 1 regularly scheduled trip

Number of days for regularly scheduled supply boat:
(77 mi/11.5 mi per hr) + (1 hr maneuvering) + (1.6 hrs add. idling at rig) + (0.2hr loading) + (24 hr demurrage) = 33.50 hrs = 1.40 days

Number of truck roundtrips = 49.9/119 = 1 trip
Total truck miles = 1 * 50 = 50 mi.

Shallow Water Development Model Wells

Waste volume generated = 36 bbl
Number of boxes of waste generated = 36/25 = 2 boxes
Number of days to drill model well = 5.2 days
Number of supply boat trips = 1 regularly scheduled trip

Number of days for supply boat:
(77 mi/11.5 mi per hr) + (1 hr maneuvering) + (1.6 hrs add. idling at rig) + (0.2hr loading) + (24 hr demurrage) = 33.50 hrs = 1.40 days

Number of truck roundtrips = 36/119 = 1 trip
Total truck miles = 1 * 50 = 50 mi.

Shallow Water Exploratory Model Wells

Waste volume generated = 80.1 bbl
Number of boxes of waste generated = 80.1/25 = 4 boxes
Number of days to drill model well = 10.9 days
Number of supply boat trips = 1 regularly scheduled trip

Number of days for regularly scheduled supply boat:
(77 mi/11.5 mi per hr) + (1 hr maneuvering) + (1.6 hrs add. idling at rig) + (0.4hr loading) + (24 hr demurrage) = 33.70 hrs = 1.40 days

Number of truck roundtrips = 80.1/119 = 1 trip
Total truck miles = 1 * 50 = 50 mi.

APPENDIX VIII-2[a]

Cost (Savings) Analysis Worksheets

a. Chapter VIII states:

- Worksheets 20 through 22 are WBF Zero Discharge baseline costs for the Gulf of Mexico, offshore California, and Cook Inlet, Alaska, respectively, including costs for transport and land disposal and for onsite injection.
- Worksheets 20A and 22A are WBF Zero Discharge BAT/NSPS Option 1 and BAT/NSPS Option 2 costs for the Gulf of Mexico (costs for transport and land disposal and for onsite injection) and for Cook Inlet, Alaska (onsite injection), respectively.

In this Appendix, the contents of these worksheets are as follows:

- Worksheets 20 and 21 are WBF Zero Discharge baseline costs for the Gulf of Mexico and offshore California, respectively, including costs for transport and land disposal; Worksheet 22 has been deleted because land disposal is not current waste management practice in Cook Inlet, Alaska.
- Worksheets 20A through 22A are WBF Zero Discharge BAT/NSPS Option 1 and BAT/NSPS Option 2 costs for the Gulf of Mexico, offshore California, and Cook Inlet, Alaska for onsite injection, respectively.

WORKSHEET A: SBF Cost Model Input Data

MODEL WELL WASTE DATA

Waste	DWD	DWE	SWD	SWE
	BPT (Retention = 9.42%; Volumes (bbl); Worksheets 1-3			
Wet cuttings	1,387	3,085	917	1,921
DF Lost w/ Cuttings	532	1,184	352	737
	BAT 1 (Retention =3.68%; Volumes (bbl); Worksheets 7-9			
Wet cuttings	1,035	2,301	684	1,433
DF Lost w/ Cuttings	180	400	119	249
	BAT 2 (Retention =3.48%; Volumes (bbl); Worksheets 7-9			
Part A: 97% (vol) of Waste is Discharged Cuttings from Cuttings Dryer				
Wet cuttings	999	2,221	660	1,383
DF Lost w/ Cuttings	166	368	109	229
Part B: 3% (vol) of Waste is Fines Retained for Zero Discharge				
Wet cuttings	36	80	24	50
DF Lost w/ Fines	14	32	9	20
	BAT-3 (Zero Discharge) Volumes (bbl): Worksheets 10-12			
Wet cuttings	1,387	3,085	917	1,921
DF Lost w/ Cuttings	532	1,184	352	737
	Length of SBF Drilling Program , in Days			
All wastes	8	18	5	11
	SBF Retention on Cuttings, % Wet Weight Cuttings			
BPT (Baseline)	10.20%	10.20%	10.20%	10.20%
BAT/NSPS Option 1 (Two Discharges):	4.03%	4.03%	4.03%	4.03%
BAT/NSPS Option 2 (One Discharge):	3.82%	3.82%	3.82%	3.82%

MISCELLANEOUS COST DATA

Geographic multiplier, CA::GOM =	1.6
Geographic multiplier, AK::GOM =	2.0
ENR CCI 1999$/1995$ Ratio =	1.108

SUMMARY OF SUPPLY BOAT INFORMATION

(N. Orentas Memo, 2/23/00)

	BPT (CA & AK) and Zero Discharge (GOM)				BAT Option 2B (ZD Fines)			
	DWD	DWE	SWD	SWE	DWD	DWE	SWD	SWE
GULF OF MEXICO OPERATIONS								
No. Supply Boat Trips								
Dedicated trips	1	2	1	1	0	0	0	0
Regularly-scheduled trip[s]	0	1	0	1	1	1	1	1
Total Trips	1	3	1	2	1	1	1	1
No. days, supply boats hauling waste ashore	**9.90**	**22.79**	**7.31**	**14.18**	**9.90**	**22.79**	**7.31**	**14.18**
CALIFORNIA OPERATIONS								
No. Supply Boat Trips								
Dedicated trips	1	NA	1	NA	0	0	0	0
Regularly-scheduled trip[s]	0	NA	0	NA	1	NA	1	NA
Total Trips	1	NA	1	NA	1	0	1	0
No. days, supply boats hauling waste ashore	**9.62**	NA	**6.92**	NA	**9.62**	NA	**6.92**	NA
ALASKA (COOK INLET) OPERATIONS (No longer applicable)								
No. Supply Boat Trips								
Dedicated trips	NA	NA	NA	NA	NA	NA	NA	NA
Regularly-scheduled trip[s]	NA	NA	NA	NA	NA	NA	NA	NA
Total Trips	NA	NA	NA	NA	NA	NA	NA	NA
No. days, supply boats hauling waste ashore	NA	NA	NA	NA	NA	NA	NA	NA

BASELINE GULF OF MEXICO OPERATIONS

			Zero Discharge GOM Disposal Inputs			
			DWD	DWE	SWD	SWE
UNIT COSTS		Container Rental	$25	$25	$25	$25
Cost per bbl SBF	$221.00	Boxes per well	59	131	39	82
Cost per bbl OBF	$79.00					
Cost per SBF Toxicity Test	$575	**Days to fill & haul**	**9.90**	**22.79**	**7.31**	**14.18**
Cost per day, supply boat	$8,500		23.508	23.550	23.513	23.427
Cost per day, onsite injection system	$4,280					
POLLUTION CONTROL SELECTION RATIOS						
Wells currently using OBF: haul vs inject		NA	NA	NA	NA	
Wells currently using OBF: convert to SBF vs remain OBF >>>		NA	NA	NA	NA	

BASELINE CALIFORNIA OPERATIONS

UNIT COSTS

Disposal Cost	$12.53	per bbl	Vendor quote: $35.00 per ton and 917 lbs waste cuttings per bbl				
Handling Cost	$5.89	per bbl	Basis: apply F125GOM handling costs = 47% of total GOM disposal costs				
Container Rental	$40.00	per box per day	GOM vendor quote ($25 per day) times geographic area multiplier (CA:GOM = 1.6)				
			58	per DWD	39	per SWD	
			131	per DWE	82	per SWE	
Supply Boat Cost	$8,500	per day					
Days to fill and haul	**9.62**	**per DWD**		**6.92**	**days per SWD**		
Trucking Cost	$355	per 2- box truck	Truck rate ($65/hr x 300 mi r.t. @55mph) per 2-box truck load				
OBF Lost Drilling Fluid (w/ Cuttings) Costs	$126	per bbl	$79 per bbl; industry quote				

BASELINE ALASKA (COOK INLET) OPERATIONS

UNIT COSTS (No longer applicable)

	SWD		
Cuttings Box Purchase Cost	$135	Operator quotes of $125/box in 1995; ENR CCI ratio of 1998$/1995$ =	1.108
Capacity of Disposal Boxes	8	bbl per box	
Cost of Disposal Boxes	540	Vendor quote of $500/box in 1995; ENR CCI ratio of 1998$/1995$ =	1.108
Supply Boat Cost	$8,500	per day, vendors	
Days rental	NA		
Trucking Cost	$1,994	Vendor quote, $1,800 per 22-ton (8-box) truckload in 1995 * ENR CCI	1.108
No. boxes per 22-ton truckload	8	(~8 boxes * 8 bbls/box * 704 lbs / bbl = 45,056 lbs)	
Drilling Fluid Cost (lost with cuttings)	$158	per bbl; from GOM vendor; Geographic Multiplier from Ofshore DD =	2.0

BAT{NSPS} OPTION 1, GULF OF MEXICO OPERATIONS

UNIT COSTS			DWD	DWE	SWD	SWE	
BAT Solids Control Equipment	$2,400	per day, including all equipment, labor, and materials;					
Drilling days (DWD; DWE; SWD; SWE)	**0.4**		**7.9**	**17.5**	**5.2**	**10.9**	data from industry
Cuttings dryer+FRU that reduces base fluid retention from 10.2% to 4.03%		proportion drilling time to total operational time (I.e., SCE rental time)					
Installation and Downtime Costs: Installation	$32,500	Installation is avg. of range;					
: Downtime	$24,000	downtime = $6,000/hour (avg.) x 4 hrs; costs from Parker 1999					
Drilling Fluid Costs (lost with cuttings)	$221	per bbl SBF; cost from vendor					
Monitoring Analyses							
Crude Contamination of Drilling Fluid @ $50/test	$50	Cost from vendor					
Retention of Base Fluids by Retort @ $50/test	$50	Retort measured once per discharge per 500 ft drilled; costs from vendor					
Footage Drilled with SBF (DWD; DWE; SWD; SWE)			6,500	8,500	7,500	10,000	

BAT{NSPS} OPTION 1, CALIFORNIA OPERATIONS

UNIT COSTS			DWD	DWE	SWD	SWE	
BAT Solids Control Equipment	$3,840	Includes equipment, labor, & materials; apply GOM costs *CA multiplier (1.6, from offshore DD)					
Drilling days (DWD; SWD)			**7.9**	**17.5**	**5.2**	**10.9**	data from industry
Cuttings dryer + FRU that reduces base fluid retention from 0.00% to 10.20%	0.4	proportion drilling time to total operational time (I.e., SCE rental time)					
Installation and Downtime Costs: Installation	$52,000	Installation is avg. of GOM cost range; plus geographic multiplier					
: Downtime	$38,400	downtime = $6,000/hour (avg. GOM cost: Parker, 1999 x 4 hrs; plus geographic multiplier					
Drilling Fluid Costs (lost with cuttings)	$354	per bbl SBF; GOM cost plus geographic multiplier; cost from vendor					
Monitoring Analyses							
Crude Contamination of Drilling Fluid @ $50/test	$50	Cost from vendor					
Retention of Base Fluids by Retort @ $50/test	$50	Retort measured once per discharge per 500 ft drilled; costs from vendor					
Footage Drilled with SBF (DWD; SWD)			6,500		7,500		

BAT{NSPS} OPTION 1, ALASKA (COOK INLET) OPERATIONS

UNIT COSTS (No longer applicable)			SWD	
BAT Solids Control Equipment	$4,800	Includes equipment, labor, & materials; apply GOM costs *AK multiplier (2.0, from offshore DD)		
Drilling days (SWD)			5.2	data from industry
Cuttings dryer + FRU that reduces base fluid retention from 0.00% to 10.20%	0.4	proportion drilling time to total operational time (I.e., SCE rental time)		
Installation and Downtime Costs: Installation	$65,000	Installation is avg. of GOM cost range; plus geographic multiplier		
: Downtime	$48,000	downtime = $6,000/hour (avg. GOM cost: Parker, 1999 x 4 hrs; plus geographic multiplier		
Drilling Fluid Costs (lost with cuttings)	$442	per bbl SBF; GOM cost plus geographic multiplier; cost from vendor		
Monitoring Analyses				
Crude Contamination of Drilling Fluid @ $50/test	$50	Cost from vendor		
Retention of Base Fluids by Retort @ $50/test	$50	Retort measured once per discharge per 500 ft drilled; costs from vendor		
Footage Drilled with SBF (SWD)			7,500	

BAT{NSPS} OPTION 2, GULF OF MEXICO OPERATIONS UNIT COSTS			DWD	DWE	SWD	SWE	
BAT Solids Control Equipment	$2,400	per day, including all equipment, labor, and materials;					
Drilling days (DWD; SWD;)			**7.9**	**17.5**	**5.2**	**10.9**	data from industry
Cuttings dryer + FRU that reduces base fluid retention from 0.00% to 10.20%	0.4	proportion drilling time to total operational time (I.e., SCE rental time)					
Installation and Downtime Costs: Installation	$32,500	Installation is avg. of range;					
: Downtime	$24,000	downtime = $6,000/hour (avg.) x 4 hrs; costs from Parker 1999					
Zero Discharge of Fines via Hauling:			0.25	0.23	0.38	0.28	
Disposal Costs @ $10.13/bbl	10.13	See Worksheet 10					
Handling Cost @ $4.75/bbl	4.75	See Worksheet 10					
Container Rental @ $25/box/day	$25	Orentas 2000					
Number boxes			2	4	2	3	
Number days to fil and haul			**9.90**	**22.79**	**7.31**	**14.18**	
Drilling Fluid Costs (lost with cuttings)	$221	per bbl SBF; cost from vendor					
Monitoring Analyses							
Crude Contamination of Drilling Fluid @ $50/test	$50	Cost from vendor					
Retention of Base Fluids by Retort @ $50/test	$50	Retort measured once per discharge per 500 ft drilled; costs from vendor					
Footage Drilled with SBF (DWD; DWE; SWD; SWE)			6,500	8,500	7,500	10,000	

BAT{NSPS} OPTION 2, CALIFORNIA OPERATIONS			DWD		SWD		
BAT Solids Control Equipment	$3,840	Includes equipment, labor, & materials; apply GOM costs *CA multiplier (1.6, from offshore DD)					
Drilling days (DWD; SWD)			**7.9**		**5.2**		data from industry
Cuttings dryer + FRU that reduces base fluid retention from 0.00% to 10.20%	0.4	proportion drilling time to total operational time (I.e., SCE rental time)					
Installation and Downtime Costs: Installation	$52,000	Installation is avg. of GOM cost range; plus geographic multiplier					
: Downtime	$38,400	downtime = $6,000/hour (avg. GOM cost: Parker, 1999 x 4 hrs; plus geographic multiplier					
Zero Discharge of Fines via Hauling:							
Disposal Cost @ $16.05/bbl	12.41	see w/s 10	Vendor quote: $35.00 per ton and 704 lbs waste cuttings per bbl				
Handling Cost @ $7.54/bbl	5.83	see w/s 10					
Container Rental @ $40/box/day	$40	Orentas 2000	GOM vendor quote ($25 per day) times geographic area multiplier (CA:GOM = 1.6)				
Trucking Cost @ $354/50-bbl truckload	$354	per 50-bbl truck load	Truck rate ($65/hr x 300 mi r.t. @55mph) per 2-box truck load				
Number boxes (DWD; SWD)			3		2		
Number days to fil and haul			**9.62**		**6.92**		
Drilling Fluid Costs (lost with cuttings)	$354	per bbl SBF; GOM cost plus geographic multiplier; cost from vendor					
Monitoring Analyses							
Crude Contamination of Drilling Fluid @ $50/test	$50	Cost from vendor					
Retention of Base Fluids by Retort @ $50/test	$50	Retort measured once per discharge per 500 ft drilled; costs from vendor					
Footage Drilled with SBF (DWD; SWD)			6,500		7,500		

BAT{NSPS} OPTION 2, ALASKA (COOK INLET) OPERATIONS UNIT COSTS (No longer applicable)			SWD
BAT Solids Control Equipment	$4,800	Includes equipment, labor, & materials; apply GOM costs *AK multiplier (2.0, from offshore DD)	
Drilling days (SWD)			5.2
Cuttings dryer + FRU that reduces base fluid retention from 0.00% to 10.20%	0.4	proportion drilling time to total operational time (I.e., SCE rental time)	
Installation and Downtime Costs: Installation	$65,000	Installation is avg. of GOM cost range; plus geographic multiplier	
: Downtime	$48,000	downtime = $6,000/hour (avg. GOM cost: Parker, 1999 x 4 hrs; plus geographic multiplier	
Zero Discharge of Fines via Hauling:			
Disposal Cost	$540		
8-bbl Cuttings Box Purchase Cost @ $135/box	$135		
Trucking Cost @ $1,944 per 8-box truckload	$1,994		
Number boxes	39		
Number days	NA		
Drilling Fluid Costs (lost with cuttings)	$442	per bbl SBF; GOM cost plus geographic multiplier; cost from vendor	
Monitoring Analyses			
Crude Contamination of Drilling Fluid @ $50/test	$50	Cost from vendor	
Retention of Base Fluids by Retort @ $50/test	$50	Retort measured once per discharge per 500 ft drilled; costs from vendor	
Footage Drilled with SBF (SWD)			7,500

WORKSHEET B: Cost Analysis for OBF and SBF

	Diesal Oil	Mineral Oil				
	a	b	c = a+b	d = 1/c	n	n * D
x	$70.00	$90.00				
1/x	0.0143	0.0111	0.0254	39.3701	2	$78.74

	IO	V Estr	LowVisc V Estr				
	a	b	c	d = a+b+c	e = 1/d	n	n * D
x	$160.00	$250.00	$300.00				
1/x	0.0063	0.0040	0.0033	0.0136	73.6196	3	$220.86

Cost of WB-drilling fluid: $45.00 /bbl

WORKSHEET C: Well Count Projections, Baseline and all Options

BASELINE

Existing Sources

	SBF/OBF/WBF	Region	DWD	DWE	SWD	SWE	
857	WBF	Gulf of Mexico	12	36	511	298	
201	SBF	Gulf of Mexico	16	48	86	51	
67	OBF	Gulf of Mexico	0	0	42	25	1,125
5	WBF	Offshore California	0	0	3	2	
0	SBF	Offshore California	0	0	0	0	
2	OBF	Offshore California	0	0	1	1	7
4	WBF	Cook Inlet, Alaska	0	0	3	1	
0	SBF	Cook Inlet, Alaska	0	0	0	0	
2	OBF	Cook Inlet, Alaska	0	0	1	1	6
							1,138

New Sources

	SBF/OBF/WBF	Region	DWD	DWE	SWD	SWE	
38	WBF	Gulf of Mexico	11	0	27	0	
20	SBF	Gulf of Mexico	15	0	5	0	
2	OBF	Gulf of Mexico	0	0	2	0	60
0	WBF	Offshore California	0	0	0	0	
0	SBF	Offshore California	0	0	0	0	
0	OBF	Offshore California	0	0	0	0	0
0	WBF	Cook Inlet, Alaska	0	0	0	0	
0	SBF	Cook Inlet, Alaska	0	0	0	0	
0	OBF	Cook Inlet, Alaska	0	0	0	0	0

Note: By definition "exploratory" wells are excluded from the "new sources" category 60

BAT OPT 2

Existing Sources

	SBF/OBF/WBF	Region	DWD	DWE	SWD	SWE	
803	WBF	Gulf of Mexico	11	34	479	279	
264	SBF	Gulf of Mexico	17	49	124	74	
40	OBF	Gulf of Mexico	0	0	25	15	1,107
5	WBF	Offshore California	0	0	3	2	
0	SBF	Offshore California	0	0	0	0	
2	OBF	Offshore California	0	0	1	1	7
4	WBF	Cook Inlet, Alaska	0	0	3	1	
1	SBF	Cook Inlet, Alaska	0	0	1	0	
1	OBF	Cook Inlet, Alaska	0	0	0	1	6
							1,120

New Sources

	SBF/OBF/WBF	Region	DWD	DWE	SWD	SWE	
35	WBF	Gulf of Mexico	10	0	25	0	
24	SBF	Gulf of Mexico	16	0	8	0	
1	OBF	Gulf of Mexico	0	0	1	0	60
0	WBF	Offshore California	0	0	0	0	
0	SBF	Offshore California	0	0	0	0	
0	OBF	Offshore California	0	0	0	0	0
0	WBF	Cook Inlet, Alaska	0	0	0	0	
0	SBF	Cook Inlet, Alaska	0	0	0	0	
0	OBF	Cook Inlet, Alaska	0	0	0	0	0

Note: By definition "exploratory" wells are excluded from the "new sources" category 60

BAT OPT 1

Existing Sources

	SBF/OBF/WBF	Region	DWD	DWE	SWD	SWE	
803	WBF	Gulf of Mexico	11	34	479	279	
264	SBF	Gulf of Mexico	17	49	124	74	
40	OBF	Gulf of Mexico	0	0	25	15	1,107
5	WBF	Offshore California	0	0	3	2	
0	SBF	Offshore California	0	0	0	0	
2	OBF	Offshore California	0	0	1	1	7
4	WBF	Cook Inlet, Alaska	0	0	3	1	
1	SBF	Cook Inlet, Alaska	0	0	1	0	
1	OBF	Cook Inlet, Alaska	0	0	0	1	6
							1,120

New Sources

	SBF/OBF/WBF	Region	DWD	DWE	SWD	SWE	
35	WBF	Gulf of Mexico	10	0	25	0	
24	SBF	Gulf of Mexico	16	0	8	0	
1	OBF	Gulf of Mexico	0	0	1	0	60
0	WBF	Offshore California	0	0	0	0	
0	SBF	Offshore California	0	0	0	0	
0	OBF	Offshore California	0	0	0	0	0
0	WBF	Cook Inlet, Alaska	0	0	0	0	
0	SBF	Cook Inlet, Alaska	0	0	0	0	
0	OBF	Cook Inlet, Alaska	0	0	0	0	0

Note: By definition "exploratory" wells are excluded from the "new sources" category 60

BAT OPT 3

Existing Sources

	SBF/OBF/WBF	Region	DWD	DWE	SWD	SWE	
877	WBF	Gulf of Mexico	17	51	511	298	877
11	SBF	Gulf of Mexico	3	8	0	0	
237	OBF	Gulf of Mexico	8	25	128	76	1,125
5	WBF	Offshore California	0	0	3	2	
0	SBF	Offshore California	0	0	0	0	
2	OBF	Offshore California	0	0	1	1	7
4	WBF	Cook Inlet, Alaska	0	0	3	1	
0	SBF	Cook Inlet, Alaska	0	0	0	0	
2	OBF	Cook Inlet, Alaska	0	0	1	1	6
							1,138

New Sources

	SBF/OBF/WBF	Region	DWD	DWE	SWD	SWE	
42	WBF	Gulf of Mexico	15	0	27	0	
3	SBF	Gulf of Mexico	3	0	0	0	
15	OBF	Gulf of Mexico	8	0	7	0	60
0	WBF	Offshore California	0	0	0	0	
0	SBF	Offshore California	0	0	0	0	
0	OBF	Offshore California	0	0	0	0	0
0	WBF	Cook Inlet, Alaska	0	0	0	0	
0	SBF	Cook Inlet, Alaska	0	0	0	0	
0	OBF	Cook Inlet, Alaska	0	0	0	0	0

Note: By definition "exploratory" wells are excluded from the "new sources" category 60

Worksheet No. 1
Compliance Cost Estimates ($1999): Baseline Current Practice (BPT)
Existing Sources; Gulf of Mexico

Technologies:	Discharge SBF cuttings via primary, secondary shakers & FRU; fractional SBF retention (wt:wt) determined as 10.2% Zero discharge of OBF cuttings via haul & land-disposal or on-site grinding and injection
Model Well Types:	Four types: Deep- and Shallow-water, Development and Exploratory

Per-Well Waste Volumes:

Deep-water Development:	1,387	bbls waste SBF/OBF-cuttings (0.2% crude contamination)
	532	bbls SBF/OBF lost with cuttings
Deep-water Exploratory:	3,085	bbls waste SBF/OBF-cuttings (0.2% crude contamination)
	1,184	bbls SBF/OBF lost with cuttings
Shallow-water Development:	917	bbls waste SBF/OBF-cuttings (0.2% crude contamination)
	352	bbls SBF/OBF lost with cuttings
Shallow-water Exploratory:	1,921	bbls waste SBF/OBF-cuttings (0.2% crude contamination)
	737	bbls SBF/OBF lost with cuttings

Cost Item	DWD	DWE	SWD	SWE	SWD	SWE	TOTAL
SBF & OBF Discharge Costs							
Drilling Fluid Costs, Wells Currently Using SBF							
SBF: (SBF@ $221/bbl)	$117,572	$261,664	$77,792	$162,877	---	---	
					---	---	
OBF Cost/Well : Haul and Dispose	---	---	---	---	$110,715	$236,406	
OBF: Well: Grind and Inject	---	---	---	---	$83,448	$174,853	
Baseline Cost ($/well)	$117,572	$261,664	$77,792	$162,877	$105,262	$224,096	
Unit Cost ($/bbl)	$85	$85	$85	$85	$115	$117	
No. wells	16	48	86	51	42	25	
No. Wells Discharge (OBF: haul)	16	48	86	51	34	20	
No. wells (OBF: inject)					8	5	
TOTAL ANNUAL ($)	`						
BASELINE GOM COST ($)	$1,881,152	##########	$6,690,112	$8,306,727	$4,431,901	$5,602,395	**$39,472,159**
	Subtotal for SBF Wells:			**$29,437,863**			
	Subtotal for OBF Wells:					**$10,034,296**	

UNIT COSTS

SBF @	$221	$/bbl lost w/ cuttings
SedTox Monitoring Test	$575	$/test, once per well

WBF Upper Bound (10.73%) Analysis for Zero Discharge Wells (fail tox/sheen)

	Deep-Water Using WBF		Shallow-Water Using WBF		
	Development	Exploratory	Development	Exploratory	
WBF haul, $/well	$906,022	$2,724,495	$627,810	$1,429,659	
WBF inject, $/well	$543,102	$1,235,566	$387,454	$768,992	
No. WBF wells	12	36	511	298	
% WBF fail sheen /tox (a)	10.73%	10.73%	10.73%	10.73%	
No wells fail sheen/tox	1	4	55	32	
No. haul	1	4	44	26	
No. inject			11	6	
No. discharge	11	32	456	266	
$ haul	$906,022	$10,897,980	27,623,640	37,171,134	$76,598,776
$ inject			$4,261,994	$4,613,951	$8,875,945
Total $	$906,022	$10,897,980	$31,885,634	$41,785,085	**$85,474,721**

(a) Per ODD

Worksheet No. 2
Compliance Cost Estimates (1999$): Baseline Current Practice (BPT) Existing Sources; California (NOTE: Costs no longer applicable to SBF reg analysis since no conversions to SBF are projected)

Technology:	Zero-Discharge via Haul and Land-Dispose	
Model Well Types:	Deep- and Shallow-water Development Wells	
Per-Well Waste Volumes:		
Deep-water Devel:	1,387	bbls waste OBF-cuttings (0.2% crude contamination)
	532	bbls OBF lost with cuttings
Deep-water Explor:	3,085	bbls waste OBF-cuttings (0.2% crude contamination)
	1,184	bbls OBF lost with cuttings
Shallow-water Devel:	917	bbls waste OBF-cuttings (0.2% crude contamination)
	352	bbls OBF lost with cuttings
Shallow-water Explor.:	1,921	bbls waste OBF-cuttings (0.2% crude contamination)
	737	bbls OBF lost with cuttings

Cost Item	SWD	SWE	TOTAL
OBF Haul & Land Dispose			
Disposal Cost ($12.53/bbl)	$11,490	$24,070	
Handling Cost ($5.89/bbl)	$5,401	$11,315	
Container Rental ($40/box/day * "x" boxes* "y" days to fill & haul)	$15,007	$22,698	
Supply Boat Cost ($8,500/day)	$81,770	$58,820	
Trucking Cost ($354/truck load)	$7,091	$14,536	
Drilling Fluid Costs (OBF lost with cuttings @ $79/bbl)	$44,352	$92,862	
TOTAL OBF Cost / Model Well, Haul/Land Dispose	**$165,111**	**$224,301**	
Unit Cost ($/bbl)	**$180**	**$117**	
No. Wells	**0**	**0**	
TOTAL CA OBF HAUL/LAND DISPOSAL COST ($)	**$0**	**$0**	**$0**
UNIT COSTS			
Disposal Cost	$12.53	per bbl	
Handling Cost	$5.89	per bbl	
Container Rental	$40	per box per day	
Boxes per well	39	82	
Days to fill & haul	**9.62**	**6.92**	
Trucking Cost	$355	- box truck load	
Supply Boat Cost	$8,500	per day	
Days to fill & haul	9.62	6.92	
OBF Lost Drilling Fluid (w/ Cuttings) Costs	$126	per bbl	
OBF Grind & Inject Disposal:			
Onsite Injection System @ $4280/day x rental days x CA geographic multiplier	$89,024	$186,608	
Drilling Fluid Costs	$44,493	$93,157	
TOTAL CA OBF Cost per Model Well, Grind & Inject ($)	$133,517	$279,765	
Unit Cost ($/bbl)	$146	$146	
No. Wells	1	1	
TOTAL CA OBF & GRIND & INJECT COST ($)	**$133,517**	**$279,765**	**$413,282**
Unit Costs			
Drilling days	**5.2**	**10.9**	
Drilling days :Operating Days	0.4	0.4	
Rental Days	**13.0**	**27.3**	
Geographic multiplier	1.6	1.6	
OBF Drilling Fluid	$79.00	$79.00	

Worksheet No. 3
Compliance Cost Estimates (1999$): Baseline Current Practice (BPT)
Existing Sources; Cook Inlet, Alaska

Technology:	Zero-Discharge via Haul and Land-Dispose			
Model Well Types:	Shallow-Water Development Wells			
Per-Well Waste Volumes:	**SWD**	**SWE**		
	917	1,921	bbls waste OBF-cuttings (0.2% crude contamination)	
	352	737	bbls OBF lost with cuttings	
Cost Item	**SWD**	**SWE**		
OBF Onsite Injection Costs			Drilling days, SWD: SWE:	
			5.2	10.9
Onsite Injection System @ $8560/day	$111,280	$233,260	Drilling days: Days-to-Drill Fraction:	0.4
(drilling days = 40% of time on rig, thus			Days-to-Drill:	
rental days = 2.5 x drilling days)			13.0	27.3
			Injection unit cost from GOM vendor	$4,280
			Geographic Multiplier, Offshore DD	2
			AK injection unit cost, $/day)	$8,560
Drilling Fluid Cost	$55,616	$116,446		
(OBF lost with cuttings @ $158/bbl)			Cost OBF ($/bbl), GOM ;	$79.00
			Geographic Multiplier, Offshore DD	2
			AK OBF cost, $/bbl)	$158.00
Total Cost per Model Well ($)	$166,896	$349,706		
Unit Cost ($/bbl)	$182	$381		
No. Wells	1	1		
Total OBF Costs per Well Type, Cook Inlet ($)	**$166,896**	**$349,706**	Per-well costs x 1 shallow-water development wells	
Total Annual Baseline OBF Cook Inlet COST ($)		**$516,602**		
SBF Onsite Injection Costs				
Onsite Injection System @ $8560/day	$111,280	$233,260		
Drilling Fluid Cost	$155,584	$325,754	Cost from GOM vendor; Geographic	221
(SBF lost with cuttings @ $442/bbl)			Multiplier from Offshore DD	2
				442
Total Cost per Well	$266,864	$559,014		

Worksheet No. 4
Compliance Cost Estimates (1999$): Cuttings Dryer & FRU Discharge (BAT/NSPS Option 1)
Existing Sources; Gulf of Mexico

Technology:	Discharge via both an add-on drill cuttings "dryer" and a fines removal unit with an average fractional retention value for base fluid on cuttings (wt:wt) =	4.03%
Model Well Types:	Four types: Deep- and Shallow-water, Development and Exploratory	
Per-Well Waste Volumes:		
Deep-water Development:	1,035	bbls waste cuttings (0.2% crude contamination)
	180	bbls SBF/OBF lost with cuttings
Deep-water Exploratory:	2,301	bbls waste cuttings (0.2% crude contamination)
	400	bbls SBF/OBF lost with cuttings
Shallow-water Development:	684	bbls waste cuttings (0.2% crude contamination)
	119	bbls SBF/OBF lost with cuttings
Shallow-water Exploratory:	1,433	bbls waste cuttings (0.2% crude contamination)
	249	bbls SBF/OBF lost with cuttings

Cost Item	DWD	DWE	SWD	SWE	TOTAL	
GOM Wells Projected to Use SBF (Current SBF plus 6%WBF & 40% OBF Wells Convert) and Discharging All Cuttings						
BAT Solids Control Equipment @ $2400/day x rental days Cuttings dryer + fines removal unit	$47,400	$105,000	$31,200	$65,400	$249,000	Includes all equipment, labor, and materials; days of rental from industry
Installation and Downtime Costs ($32,500 inst + $24,000 dt)	$56,500	$56,500	$56,500	$56,500	$226,000	Installation costs ($32,500) plus $6,000/hour (avg; Parker, 1999) x 4 hrs
Drilling Fluid Costs (SBF lost with cuttings @ $180/bbl)	$39,780	$88,400	$26,299	$55,029	$209,508	Cost from vendor
Monitoring Analyses						
Crude Contamination of Drilling Fluid @ $50/test	$50	$50	$50	$50	$200	Cost from vendor
Retention of Base Fluids by Retort @ $50/test	$1,300	$1,700	$1,500	$2,000	$6,500	Retort run once/discharge/500 ft drilled;
SedTox Monitoring Test	$575	$575	$575	$575		one commingled discharge; cost from vendor
Unadjusted Cost Per Well ($)	$145,605	$252,225	$116,124	$179,554		
Unit Cost ($/bbl)	$141	$110	$170	$125		
No. SBF wells + WBF>SBF wells + OBF > SBF wells	17	49	124	74	264	
Total Annual GOM Cost for SBF Wells ($)	$2,475,285	$12,359,025	$14,399,376	$13,286,996	$42,520,682	
Installation/Downtime Well / Structure Adj't Factor	2.2	1.6	2.2	1.6		
Installation/Downtime Well per Structure Total Cost Adjustment	($523,909)	($1,038,188)	($3,821,455)	($1,567,875)	($6,951,426)	
Total Adj'd Annual GOM Cost, SBF Wells	**$1,951,376**	**$11,320,838**	**$10,577,921**	**$11,719,121**	**$35,569,256**	
Avg Adjusted Total Cost per well type	**$114,787**	**$231,038**	**$85,306**	**$158,367**		
GOM Wells Retaining Use of OBF (0% Conversion)						
Cost/Well : Haul and Dispose			$110,715	$236,406		
Cost/Well: Grind and Inject			$83,448	$174,853		
Weighted (80:20, haul:inject)Average Cost Per Well ($)			$105,262	$224,096	$329,358	
Unit Cost ($/bbl)			$115	$117		
No. Wells			25	15		
No. Wells haul			20	12		
No. Wells inject			5	3		
TOT ANNUAL GOM COST (OBF Wells; $)			**2,631,544**	**3,361,437**	**5,992,981**	
TOT Annual GOM Cost for SBF Improved Solids Control ($)					**35,569,256**	
TOT Annual GOM Cost , SBF+OBF Wells					**41,562,237**	

UNIT COSTS

Drilling days (DWD; DWE; SWD; SWE)	**7.90**	**17.50**	**5.20**	**10.90**	
Proportion drilling time to operational (rental) time	0.40				
BAT Solids Control Equipment (cuttings dryer+FRU)	$2,400	per day, including equipment, labor, and materials;			
Installation and Downtime Costs: Installation	$32,500	Installation is avg. of range;			
: Downtime	$24,000	downtime = $6,000/hour (avg.) x 4 hrs; costs from Parker 1999			
Drilling Fluid Costs (lost with cuttings)	$221	per bbl SBF; cost from vendor			
Monitoring Analyses					
Footage Drilled with SBF (DWD; DWE; SWD; SWE)	6,500	8,500	7,500	10,000	
Retention of Base Fluids by Retort @ $50/test	50	Retort measured once per discharge per 500 ft drilled; costs from vendor			
Crude Contamination of Drilling Fluid @ $50/test	50	Cost from vendor			
SedTox Monitoring Test	575				

* FRU: fines removal unit (i.e., decanting centrifuge or mud cleaner)

Worksheet No. 4-A

WBF Upper Bound (10.73%) Analysis for Zero Discharge Wells

Existing Sources; Gulf of Mexico

(Costs incurred only if WBF wells are projected to fail their toxicity or sheen limits)

BAT 1 & 2

WBF ANALYSIS:	**DWD**	**DWE**	**SWD**	**SWE**	
(WBF > SBF Wells Only, projected WBF Costs)					
haul	$906,022	$2,724,495	$627,810	$1,429,659	(see worksheet 20 for per well cost detail)
inject	$543,102	$1,235,566	$387,454	$768,992	(see worksheet 20A for per well cost detail)
Total No. WBF>SBF Wells	1	2	32	19	
% Fail sheen/tox	10.73%	10.73%	10.73%	10.73%	
No. Wells Fail sheen/tox	0	0	3	2	
No. haul	0	0	2	2	
No. inject			1	0	
Cost to haul	$0	$0	$1,255,620	$2,859,318	$4,114,938
Cost to inject	$0	$0	$387,454	$0	$387,454
Total WBF> SBF Haul+Inject Costs	$0	$0	$1,643,074	$2,859,318	**$4,502,392**

BAT 1 & 2	**DWD**	**DWE**	**SWD**	**SWE**		
WBF ANALYSIS:						
(Remaining WBF Wells)						
WBF haul, $/well	$906,022	$2,724,495	$627,810	$1,429,659		
WBF inject, $/well	$543,102	$1,235,566	$387,454	$768,992		
No. WBF wells	11	34	479	279		
% WBF fail sheen /tox (a)	10.73%	10.73%	10.73%	10.73%		
No wells fail sheen/tox	1	4	51	30		
No. haul	1	4	41	24		
No. inject			10	6		
$ haul	$906,022	$10,897,980	25,740,210	34,311,816	$71,856,028	
$ inject			$3,874,540	$4,613,951	$8,488,491	
Total $	$906,022	$10,897,980	$29,614,750	$38,925,767	**$80,344,519**	
(a) Per ODD						**$84,846,911**

Installation/Downtime Adjusted BAT 1 SBF Well Costs	**DWD**	**DWE**	**SWD**	**SWE**	**Totals**
Total Annnual GOM Disposal Cost for SBF Wells ($)	$2,475,285	$12,359,025	$14,399,376	$13,286,996	$42,520,682
No. Wells	17	49	124	74	264
Average Cost per well type	$145,605	$252,225	$116,124	$179,554	$161,063
Installation/Downtime Well/Structure Adjustment	($523,909)	($1,038,188)	($3,821,455)	($1,567,875)	($6,951,426)
TOTAL ADJ 'D ANNUAL GOM Cost, SBF Wells ($)	$1,951,376	$11,320,838	$10,577,921	$11,719,121	$35,569,256
Average Adjusted Total Cost per well type	114,787	231,038	85,306	158,367	
GOM-wide wtd avg per well					$134,732

Worksheet No. 5

(see Baseline CA sheet (W/Ss 2 & 2-A) for SBF/OBF cost projections, all options)

Compliance Cost Estimates (1999$): Discharge from Cuttings Dryer/FRUs (BAT/NSPS Option 1)
Existing Sources, California (Costs no longer applicable; 0% conversion to SBF projected)

Technology:	Discharge via both an add-on drill cuttings "dryer" and a fines removal unit with an average fractional retention of base fluid on cuttings (weight:weight) = 4.03%
Model Well Types:	Deep- and Shallow-Water Development Wells

Per-Well Waste Volumes:

Shallow-water Explor.:	1,433	bbls waste SBF-cuttings (0.2% crude contamination)
	249	bbls SBF lost with cuttings
Shallow-water Development:	684	bbls waste SBF-cuttings (0.2% crude contamination)
	119	bbls SBF lost with cuttings

Cost Item	SWD	SWE	TOTAL	
SBF Discharge				
SBF Cost Estimate				
BAT Solids Control Equipment @ $3840/day x rental days Cuttings dryer + fines removal unit	$75,840	$48,960		Includes all equipment, labor, and materials; Geographic Area Cost Multiplier (1.6) from Offshore DD; rental days from industry data
Installation and Downtime Costs ($52,000 inst + $38,400 dt)	$90,400	$90,400		Installation is avg. of range; downtime is $6,000/hour (avg) x 1.6 (area multiplier) x 4 hours; costs from Parker 1999
Drilling Fluid Costs (SBF lost with cuttings @ $354/bbl)	$88,146	$42,126		Cost from vendor; Geographic Multiplier from Offshore DD
Monitoring Analyses				
Crude Contamination of Drilling Fluid @ $50/test	$50	$50		Cost from vendor
Retention of Base Fluids by Retort @ $50/test	$1,300	$1,500		Retort measured once per discharge per 500 ft drilled;
SedTox Monitoring Test	$575	$575		two discharge points; cost from vendor
TOTAL Cost Per Well ($)	$256,311	$183,611		
Unit Cost ($/bbl)	$179	$268		
No. Wells	0	0		
TOTAL ANNUAL CA Cost ($)	$0	$0	**$0**	Per-well costs x no. of wells

UNIT COSTS

Drilling days (DWD; SWD)	**7.9**	**5.1**		from industry
Proportion of drilling time to total operational time (I.e., SCE rental time)	0.4			
BAT Solids Control Equipment (cuttings dryer + fines removal unit)	$3,840			Includes all equipment, labor, and materials; geographic multiplier (1.6) from offshore DD
Installation and Downtime Costs: Installation	$52,000			Installation is avg. of GOM cost range; plus geographic multiplier
: Downtime	$38,400			downtime = $6,000/hour (avg. GOM cost; Parker, 1999) x 4 hrs; plus geographic multiplier
Drilling Fluid Costs (lost with cuttings)	$354			per bbl SBF; GOM cost plus geographic multiplier; cost from vendor
Monitoring Analyses				
Footage Drilled with SBF (DWD; SWD)	6,500	7,500		
Retention of Base Fluids by Retort @ $50/test	50			Retort once/discharge/500 ft drilled; 2 discharge points (cuttings dryer; FRU); vendor costs
Crude Contamination of Drilling Fluid @ $50/test	$50			Cost from vendor
SedTox Monitoring Test	$575			
CA Wells Currently Using OBF (0% Conversion Scenario)				
TOTAL Cost per Model Well ($)	$133,517	$279,765		
Unit Cost ($/bbl)	$180	$117		
No. Wells	1	1	2	
TOTAL ANNUAL BASELINE CA COST ($)	**$133,517**	**$279,765**	**$413,282**	

Worksheet No. 6
Compliance Cost Estimates (1999$): Cuttings Dryer/FRU Discharge (BAT/NSPS Option 1)
Existing Sources; Cook Inlet, Alaska (NOTE: SBF disposal projected via onsite injection)

Technology:	Discharge via both an add-on drill cuttings "dryer" and fines removal unit; average fractional retention of basefluid on cuttings (wt:wt) =	4.03%
Model Well Types:	Shallow-Water Development Wells	

Per-Well Waste Volumes:

Shallow-water Development:	917	bbls waste SBF-cuttings (0.2% crude contamination)
	352	bbls SBF lost with cuttings [NOTE: volumes not the same
Shallow-water Exploration:	1,921	as other BAT1 volumes -- current practice is to inject OBF;
	737	will not upgrade ttmt system to reduce retention on cuttings.]

Cost Item	SWD	SWE		
AK WBF Wells: Grind & Onsite Injection (if applicable)				
Onsite Injection System @ $8560/day	$222,560	$466,520		
(drilling days = 40% of time on rig, thus				
rental days = 2.5 x drilling days)				
Drilling Fluid Cost	$27,302	$52,961	Cost from GOM vendor; Geographic	$180
(WBF lost with cuttings @ $90/bbl)			Multiplier from Offshore DD	2
TOTAL Cost Per Well ($)	$249,862	$519,481		
Unit Cost ($/bbl)	$178	$191		
No. Wells Fail Limts	0	0		
Total Annual Cook Inlet Cost per Well Type ($)	**$0**	**$0**		
TOTAL ANNUAL Cook Inlet Cost ($)		**$0**		
UNIT COSTS				
BAT Solids Control Eqpt (cuttings dryer+fines removal unit)	$4,800		Includes eqpt/labor/mat'l; geogr multiplier (1.6) from ODD	
Drilling days (SWD)	**5.2**	**10.9**	from industry	
Proportion drilling time to oper'l time (SCE rental time)	$0			
Installation and Downtime Costs: Installation	$65,000		Install'n is avg. of GOM cost range; + geogr multiplier dwntime	
: Downtime	$48,000		=$6K/h (avg. GOM cost; Parker, 1999x4 h; + geogr multiplier	
SBF Drilling Fluid Costs (lost with cuttings)	$442		per bbl SBF; GOM cost + geogr multiplier; cost from vendor	
Monitoring Analyses				
Crude Contamination of Drilling Fluid @ $50/test	$50		Cost from vendor	
Retention of Base Fluids by Retort @ $50/test	$50		Retort once/discharge/500 ft; 2 discharges	
Footage Drilled with SBF (SWD)	$7,500		(cuttings dryer and FRU); costs from vendor	
AK Well (n=1) Projected to Convert from OBF to SBF; Onsite Injection				
Cost Item	**SWD**	**SWE**		
Onsite Injection System @ $8560/day	$111,280	$233,260	see Baseline worksheet for details	
(drilling days = 40% of time on rig, thus				
rental days = 2.5 x drilling days)				
Drilling Fluid Cost	$155,584	$325,754	Cost from GOM vendor; Geographic	$221
(SBF lost with cuttings @ $442/bbl)			Multiplier from Offshore DD	2
Total Cost per Model Well ($)	**$266,864**	**$559,014**		
Unit Cost ($/bbl)	$291	$291		
No. Wells	1	0		
Total OBF Costs per Well Type, Cook Inlet ($)	**$266,864**	**$0**		
Total Annual Baseline OBF Cook Inlet COST ($)	**$266,864**			
AK OBF Wells (n=2) Projected to Remain OBF; Onsite Injection				
Onsite Injection System @ $8560/day				
(drilling days = 40% of time on rig, thus	$111,280	$233,260		
rental days = 2.5 x drilling days)				
Drilling Fluid Cost	$55,616	$116,446	Cost from GOM vendor; Geographic	$79
(OBF lost with cuttings @ $158/bbl)			Multiplier from Offshore DD	2
Total Cost per Model Well ($)	**$166,896**	**$349,706**		
Unit Cost ($/bbl)	$182	$182		
No. Wells	0	1		
Total OBF Costs per Well Type, Cook Inlet ($)	**$0**	**$349,706**		
Total Annual Baseline OBF Cook Inlet COST ($)		**$349,706**		

Worksheet No. 6-A BAT/NSPS Option 1, Alaska

WBF Upper Bound (10.73%) Analysis for Zero Discharge Wells

(Costs incurred only if WBF wells are projected to fail their toxicity or sheen limits)

SWD	1,404	bbls waste cuttings
SWD	6,067	bbls WBF discharged
SWE	2,723	bbls waste cuttings
SWE	11,769	bbls WBF discharged

WBF Disposal	DWD	DWE	SWD	SWE
Onsite Injection System @$8560/day	NA	NA	$222,560	$466,520
Drilling Fluid Cost			$27,302	$52,961
Total Cost / Model Well ($)			$249,862	$519,481
Unit Cost ($/bbl)			$178	$191
No Wells			3	1
No. Wells Fail Limits			0	0
Total Costs per Well Type,			$0	$0
Total Annual Baseline Cook Inlet Costs ($)				**$0**
% WBF wells projected to fail toxicity and/or /sheen limitations				10.73%

5.00% adherent fluid

$90 per bbl, WBF

Worksheet No. 7
Compliance Cost Estimates (1999$): Cuttings Dryer Discharge; Zero Discharge FRUs (BAT/NSPS Option 2)
Existing Sources; Gulf of Mexico

Technology: Discharge via both an add-on drill cuttings "dryer" and a fines removal unit with an average fractonal retention of base fluid on cuttings (weight:weight) = 3.82%

Model Well Types: Four types: Deep- and Shallow-water, Development and Exploratory

Per-Well Waste Volumes (bbls):

	DWD	DWE	SWD	SWE
Waste Cuttings @ 3.82% Retention, bbl	999	2,221	660	1,383
SBF Lost with Cuttings, bbl	166	368	109	229
Waste Fines @ 10.2% Retention, bbl	36	80	24	50
SBF Lost with Fines. bbl	14	32	9	21

Cost Item	DWD	DWE	SWD	SWE	TOTAL	
GOM Wells Currently Using SBF and Discharging Cuttings						
DISCHARGED PORTION, SBF FLUIDS AND CUTTINGS DRYER WASTE STREAM						
BAT Solids Control Equipment @ $2400/day x rental days (Cuttings dryer + fines removal unit costs)	$47,400	$105,000	$31,200	$65,400		Includes all equipment, labor, and materials; days of rental from industry
Installation and Downtime Costs ($32,500 inst + $24,000 dt)	$56,500	$56,500	$56,500	$56,500		Installation is avg. of range; downtime is $6,000/hour (avg.) x 4 hrs; costs from Parker 1999
Adjustment to Installation/Dopwntime Costs - Multiple Well Structures:						
Projected No. Wells per Structure	2.2	1.6	2.2	1.6		
Adjusted Cost per well for Installation and Downtime	($30,818)	($21,188)	($30,818)	($21,188)		
Drilling Fluid Costs @ $221/bbl: SBF lost with cuttings	$36,686	$81,328	$24,089	$50,609		Cost from vendor
Monitoring Analyses						
Crude Contamination of Drilling Fluid @ $50/test	$50	$50	$50	$50		Cost from vendor
Retention of Base Fluids by Retort @ $50/test	$650	$850	$750	$1,000		Retort measured once per discharge per 500 ft drilled;
SedTox Monitoring Test	$575	$575	$575	$575		cost from vendor
Costs per Well, Discharged Waste/Cuttings Dryer Portion	$111,043	$223,116	$82,346	$152,947		
Unit Cost ($/bbl)	$111	$100	$125	$111		
No. SBF wells + WBF>SBF wells + OBF > SBF wells	17	49	124	74		
Annual GOM Cost for Cuttings Dryer Units/SBF Wells	**$1,887,728**	**$10,932,660**	**$10,210,881**	**$11,318,041**	**$34,349,310**	
DISCHARGED PORTION, ZERO DISCHARGE FINES REMOVAL WASTE STREAM						
Zero Discharge of Fines via Hauling						
Disposal Costs @ $10.13/bbl	$365	$810	$243	$507		
Handling Cost @ $4.75/bbl	$171	$380	$114	$238		
Container Rental @ $25/box/day x no. bxx x days to fill and haul	$495	$2,279	$366	$1,064		
Drilling Fluid Costs @$221/bbl : SBF Lost with Fines	$3,094	$7,072	$1,989	$4,641		
Costs per Well, Zero Discharge FRU Portion	**$4,125**	**$10,541**	**$2,712**	**$6,449**		
Unit Cost ($/bbl)	$115	$132	$113	$129		
No. SBF wells + WBF>SBF wells + OBF > SBF wells	17	49	124	74		
Annual GOM Cost for Fines Removal Units/SBF Wells	**$70,119.56**	**$516,528.60**	**$336,240.88**	**$477,189.00**	**$1,400,078.04**	
TOTAL GOM SBF BAT 3 COSTS PER WELL	**$115,167.50**	**$233,656.90**	**$85,057.44**	**$159,395.00**		
TOTAL GOM SBF BAT 3 COSTS	**$1,957,847.56**	**$11,449,188.60**	**$10,547,121.88**	**$11,795,230.00**	**$35,749,388.04**	

GOM Wells Currently Using OBF (0% Conversion)						
Cost/Well : Haul and Dispose			$110,715	$236,406		
Cost/Well: Grind and Inject			$83,448	$174,853		
Weighted (80:20, haul:inject)Average Cost Per Well ($)			$105,262	$224,096		
Unit Weighted Average Cost ($/bbl)			$115	$117		
No. Wells			25	15	40	
TOTAL ANNUAL GOM Cost for OBF Wells ($)			**$2,631,544**	**$3,361,437**	**$5,992,981**	
TOTAL ANNUAL GOM Cost for SBF Improved Solids Control ($)					**$35,749,388**	
TOTAL ANNUAL GOM Cost , SBF+OBF Wells					**$41,742,369**	

UNIT COSTS					
BAT Solids Control Equipment (cuttings dryer + fines removal unit)	$2,400	per day, including all equipment, labor, and materials;			
Drilling days (DWD; DWE; SWD; SWE)	**7.90**	**17.50**	**5.20**	**10.90**	data from industry
Proportion of drilling time to total operational time (I.e., SCE rental time)	0.4				
Installation and Downtime Costs: Installation	$32,500	Installation is avg. of range;			
: Downtime	$24,000	downtime = $6,000/hour (avg.) x 4 hrs; costs from Parker 1999			
Zero Discharge of Fines via Hauling:					
Disposal Costs @ $10.13/bbl	$10.13	See Worksheet 10			
Handling Cost @ $4.75/bbl	$4.75	See Worksheet 10			
Container Rental @ $25/box/day	$25	Orentas 2000			
Number boxes	2	4	2	3	
Number days to fill and haul	**9.90**	**22.79**	**7.31**	**14.18**	
Drilling Fluid Costs (lost with cuttings)	$221	per bbl SBF; cost from vendor			
Monitoring Analyses					
Crude Contamination of Drilling Fluid @ $50/test	$50	Cost from vendor			
Retention of Base Fluids by Retort @ $50/test	$50	Retort measured once per discharge per 500 ft drilled; one disharge point (cuttings dryer) costs from vendor			
Footage Drilled with SBF (DWD; DWE; SWD; SWE)	6500	8500	7500	10000	
SedTox Monitoring Test	$575				

Haul/Inject Disposal Costs for SBF Fines Only					
	Deep Water Devel. Well	Deep Water Explor. Well	Shallow Water Devel. Well	Shallow Water Explor. Well	
Disposal Costs @ $10.13/bbl	$365	$810	$243	$507	
Handling Cost @ $4.75/bbl	$171	$380	$114	$238	
Container Rental @ $25/bx/d	$495	$2,279	$366	$1,064	
SBF lost with fines	$3,094	$7,072	$1,989	$4,641	
Total Cost Per Well ($)	$4,125	$10,541	$2,712	$6,449	
No. Wells	17	49	124	74	
TOTAL GOM DISPOSAL COSTS	$70,120	$516,529	$336,241	$477,189	$1,400,078

Worksheet No. 8

(see Baseline CA sheet (W/Ss 2 & 2-A) for SBF/OBF cost projections, all options)

Compliance Cost Estimates (1999$): Cuttings Dryer Discharge; Zero Discharge FRUs (BAT/NSPS Option 2) Existing Sources, California (Costs no longer applicable; 0% conversion to SBF projected)

Technology:	Discharge via both an add-on drill cuttings "dı` retention of base fluid on cuttings (wt:wt) = 3.82%
Model Well Types:	Deep- and Shallow-Water Development Wells

Per-Well Waste Volumes:

	SWE	SWD
Waste Cuttings @ 3.48% Retention	1,383	660
SBF Lost with Cuttings	229	109
Waste Fines @ 9.42% Retention	50	24
SBF Lost with Fines	20	9

Cost Item	SWE	SWD	TOTAL	
SBF Discharge/Disposal				
BAT Solids Control Equipment @ $3840/day x rental days Cuttings dryer + fines removal unit	$75,840	$49,920		Includes all equipment, labor, and materials; Geographic Area Cost Multiplier (1.6) from Offshore DD; rental days from industry
Installation and Downtime Costs ($52,000 inst + $38,400 dt)	$90,400	$90,400		Installation is avg. of range; downtime is $6,000/hour (avg) x 1.6 (area multiplier) x 4 hours; costs from Parker 1999
Zero Discharge of Fines via Hauling				
Disposal Cost @ $12.41/bbl	$0	$0		
Handling Cost @ $5.83/bbl	$0	$0		
Container Rental @ $40/box/day	$1,154	$554		
Trucking Cost @ $354/50-bbl truckload	$354	$354		
Drilling Fluid Costs @ $354/bbl				Cost from vendor; Geographic Multiplier from Offshore DD
SBF lost with cuttings	$81,066	$38,586		
SBF lost with fines	$7,080	$3,186		
Monitoring Analyses				
Crude Contamination of Drilling Fluid @ $50/test	$50	$50		Cost from vendor
Retention of Base Fluids by Retort @ $50/test	$650	$750		Retort measured once per discharge per 500 ft drilled;
SedTox Monitoring Test	$575	$0		cost from vendor
TOTAL Cost Per Well ($)	$256,815	$183,446		
Unit Cost ($/bbl)	$179	$268		
No. Wells	0	0		
TOTAL ANNUAL CA Cost ($)	$0	$0	**$0**	Per-well costs x no. of wells

UNIT COSTS

Drilling days (DWD; SWD)	**7.9**	**5.2**	data from industry
raction of drilling time to total operational (I.e., rental) time	0.4		
BAT Solids Control Equipment (cuttings dryer + FRU	$3,840		Includes all equipment, labor, and materials; geographic multiplier (1.6) from offshore D
Installation and Downtime Costs: Installation	$52,000		Installation is avg. of GOM cost range; plus geographic multiplier
: Downtime	$38,400		downtime = $6,000/hour (avg. GOM cost; Parker, 1999) x 4 hrs; plus geographic multipl
Zero Discharge of Fines via Hauling:			per bbl SBF; GOM cost plus geographic multiplier; cost from vendor
Disposal Cost @ $12.32/bbl	$0		
Handling Cost @ $5.79/bbl	$0		
Container Rental @ $40/box/day	$40		
Trucking Cost @ $354/50-bbl truckload	$354		per 50-bbl truck load
Number boxes	3	2	
Number days to fill and haul	**9.62**	**6.92**	
Drilling Fluid Costs (lost with cuttings)	354		
Monitoring Analyses			
Footage Drilled with SBF (DWD; SWD)	6,500	7,500	
Retention of Base Fluids by Retort @ $50/test	$50		Retort once/discharge/500 ft drilled; 1 disharge point (cuttings dryer) costs from vendo
Crude Contamination of Drilling Fluid @ $50/test	$50		Cost from vendor
SedTox Monitoring Test	$575		

Worksheet No. 9
Compliance Cost Estimates (1999$): Discharge from Cuttings Dryer; Zero Discharge of Fines (BAT 2)Existing Sources; Cook Inlet, Alaska (NOTE: projected SBF disposal -- onsite injection)

Technology:	Discharge via add-on drill cuttings "dryer" and fines removal unit; average fractional retention of base fluid on cuttings (wt:wt) = 3.82%		
Model Well Types:	Shallow-Water Development Wells		
Per-Well Waste Volumes:			
	SWD	SWE	
Waste Cuttings @ 3.48% Retention	917	1,921	
SBF Lost with Cuttings	352	737	bbls SBF lost with cuttings [NOTE: the volumes are not the same
Waste Fines @ 9.42% Retention	NA	NA	as other BAT1 volumes because current practice is to inject OBF;
SBF Lost with Fines	NA	NA	will not upgrade ttmt system to reduce retention on cuttings.]

Cost Item	**SWD**	**SWE**	
AK WBF Wells: Grind and Onsite Injection Costs (if applicable)			
Onsite Injection System @$8560/day	NA	NA	
Drilling Fluid Cost, WBF	NA	NA	
TOTAL Cost Per Well ($)	$0	$0	
Unit Cost ($/bbl)	$0	$0	
No. Wells Fail Limits	0	0	
TOTAL ANNUAL Cook Inlet Cost ($)	**$0**	**$0**	
		0	
UNIT COSTS			
Drilling days	**5.2**	**10.9**	
Proportion of drilling time to total operational (I.e., rental) time	0.4		
SBF Drilling Fluid Cost/bbl (lost with cuttings)	$442	$442	
AK Well (n=1) Projected to Convert from OBF to SBF; Onsite Injection			
Cost Item	**SWD**	**SWE**	
Onsite Injection System @ $8560/day (drilling days = 40% of time on rig, thus rental days = 2.5 x drilling days)	$111,280	$233,260	see Baseline worksheet for details
Drilling Fluid Cost (SBF lost with cuttings @ $442/bbl)	$155,584	$325,754	
Total Cost per Model Well ($)	**$266,864**	**$559,014**	
Unit Cost ($/bbl)	$291	$291	
No. Wells	1	0	
TotalAnnual Baseline OBF Cook Inlet COST ($)	**266,864.00**		
AK OBF Well Projected to Remain OBF; Onsite Injection			
Total Cost per Model Well ($)	**$166,896**	**$349,706**	
Unit Cost ($/bbl)	$182	$182	
No. Wells	0	1	
Total Annual Baseline OBF Cook Inlet COST ($)		**$349,706**	

Worksheet No. 9-A BAT/NSPS Option 2, Alaska

WBF Upper Bound (10.73% Analysis for Zero Discharge Wells

(Costs incurred only if WBF wells are projected to fail their toxicity or sheen limits)

WBF Disposal Analysis

WBF Waste Volumes (per ODD Data)

SWD	1,404	bbls waste cuttings
SWD	6,067	bbls WBF discharged
SWE	2,723	bbls waste cuttings
SWE	11,769	bbls WBF discharged

	DWD	DWE	SWD	SWE
Onsite Injection System @$8560/day	NA	NA	$222,560	$466,520
Drilling Fluid Cost			$27,302	$52,961
Total Cost / Model Well ($)			$249,862	$519,481
Unit Cost ($/bbl)			$178	$191
No. Wells			3	1
No. Wells Fail Limts			0	0
Total Costs / Well Type			$0	$0
Total Annual Cost				**$0**

% WBF wells projected to fail toxicity and/or /sheen limitations 10.73%

5.00% adherent fluid
$90 per bbl, WBF

Worksheet No. 10
Per Well Compliance Cost Estimates (1999$): Zero Discharge (BAT 3)
Existing Sources; Gulf of Mexico

Technology:	Zero-Discharge via Haul and Land-Dispose
Model Well Types:	Four types: Deep- and Shallow-water, Development and Exploratory

Per-Well Waste Volumes:

Deep-water Development:	1,387	bbls waste cuttings (0.2% crude contamination)
	532	bbls SBF lost with cuttings
Deep-water Exploratory:	3,085	bbls waste cuttings (0.2% crude contamination)
	1,184	bbls SBF lost with cuttings
Shallow-water Development:	917	bbls waste cuttings (0.2% crude contamination)
	352	bbls OBF lost with cuttings
Shallow-water Exploratory:	1,921	bbls waste cuttings (0.2% crude contamination)
	737	bbls OBF lost with cuttings

Cost Item	DWD	DWE	SWD	SWE	
GOM OBF Wells Projected to Convert from SBF to OBF Under Zero Discharge					
Disposal Cost ($10.13/bbl)	$14,050	$31,251	$9,289	$19,460	Average of $9.50 and $10.75, quoted from vendors
Handling Cost ($4.75/bbl)	$6,588	$14,654	$4,356	$9,125	Vendor quote, includes crains, labor, trucks to landfill, etc.
Container Rental ($25/box/day * "x" boxes* "y" days to fill & haul)	$14,603	$74,637	$7,127	$29,069	Vendor
Supply Boat Cost ($8,500/day) x days to fill and haul	$84,150	$193,715	$62,135	$120,530	Vendors
Drilling Fluid Costs (OBF lost with cuttings @ $79/bbl)	$42,028	$93,536	$27,808	$58,223	Vendor quote
TOTAL Cost per Model Well ($)	**$161,419**	**$407,793**	**$110,715**	**$236,406**	
Unit Cost to Haul and Dispose ($/bbl)	$116	$132	$121	$123	
GOM SBF Wells Projected to Remain as SBF Wells Under Zero Discharge					
Disposal Cost ($10.13/bbl)	$14,050	$31,251	$9,289	$19,460	Average of $9.50 and $10.75, quoted from vendors
Handling Cost ($4.75/bbl)	$6,588	$14,654	$4,356	$9,125	Vendor quote, includes crains, labor, trucks to landfill, etc.
Container Rental ($25/box/day * "x" boxes* "y" days to fill & haul)	$14,603	$74,637	$7,127	$29,069	Vendor
Supply Boat Cost ($8,500/day) x days to fill and haul	$84,150	$193,715	$62,135	$120,530	Vendors
Drilling Fluid Costs (SBF lost with cuttings @ $221/bbl)	$117,572	$261,664	$77,792	$162,877	Vendor and operator quotes
TOTAL Cost per Model Well ($)	**$236,963**	**$575,921**	**$160,699**	**$341,060**	
Unit Cost to Haul and Dispose ($/bbl)	**$171**	**$187**	**$175**	**$178**	

For SBF > OBF Wells Under Zero Discharge		
Drilling Fluid Costs (OBF lost with cuttings @ $79/bbl)	$42,028	$93,536
Other Unchanged Costs	$119,391	$314,257
TOTAL Cost per Model Well ($)	**$161,419**	**$407,793**
Unit Cost to Haul and Dispose ($/bbl)	**$116**	**$132**

Worksheet No. 11
Per Well Compliance Cost Estimates (1999$): Zero Discharge (BAT 3)
Existing Sources; Gulf of Mexico

Technology:	Zero-Discharge via On-site Grinding and Injection	
Model Well Types:	Four types: Deep- and Shallow-water, Development and Exploratory	
Per-Well Waste Volumes:		
Deep-water Development:	1,387	bbls waste SBF-cuttings (0.2% crude contamination)
	532	bbls SBF lost with cuttings
Deep-water Exploratory:	3,085	bbls waste SBF-cuttings (0.2% crude contamination)
	1,184	bbls SBF lost with cuttings
Shallow-water Development:	917	bbls waste SBF-cuttings (0.2% crude contamination)
	352	bbls OBF lost with cuttings
Shallow-water Exploratory:	1,921	bbls waste SBF-cuttings (0.2% crude contamination)
	737	bbls OBF lost with cuttings

Cost Item	DWD	DWE	SWD	SWE	
GOM OBF Wells Projected to Convert from SBF to OBF Under Zero Discharge					
Onsite Injection System @ $4280/day (drilling days = 40% of time on rig, thus rental days = 2.5 x drilling days)	---	---	$55,640	$116,630	Includes all equipment, labor, and services; vacuum system used to transport cuttings
Drilling Fluid Costs (OBF lost with cuttings @ $79/bbl)	---	---	$27,808	$58,223	
TOTAL Cost per Model Well ($)	**---**	**---**	**$83,448**	**$174,853**	
Unit Cost to Grind and Inject ($/bbl)	---	---	$91	$91	
GOM SBF Wells Projected to Remain as SBF Wells Under Zero Discharge					
Onsite Injection System @ $4280/day (drilling days = 40% of time on rig, thus rental days = 2.5 x drilling days)	$84,530	$187,250	---	---	Includes all equipment, labor, and services; vacuum system used to transport cuttings
Drilling Fluid Costs (SBF lost with cuttings @ $221/bbl)	$117,572	$261,664	---	---	Drilling Fluid Costs (OBF lost with cuttings @ $79/bbl)
TOTAL Cost per Model Well ($)	**$202,102**	**$448,914**	---	---	
Unit Cost to Grind and Inject ($/bbl)	$146	$146	---	---	

Worksheet No. 12
Zero Discharge (BAT 3) Compliance Cost Estimates (1999$)
Existing Sources; Gulf of Mexico

Technology:	100% Deep- and 80% Shallow-water Wells Haul & Land-Dispose; 20% Shallow-water Wells Inject
Model Well Types:	Four types: Deep- and Shallow-water, Development and Exploratory

Per-Well Waste Volumes:

Deep-water Development:	1,387	bbls waste SBF-cuttings (0.2% crude contamination)
	532	bbls SBF lost with cuttings
Deep-water Exploratory:	3,085	bbls waste SBF-cuttings (0.2% crude contamination)
	1,184	bbls SBF lost with cuttings
Shallow-water Development:	917	bbls waste SBF-cuttings (0.2% crude contamination)
	352	bbls OBF lost with cuttings
Shallow-water Exploratory:	1,921	bbls waste SBF-cuttings (0.2% crude contamination)
	737	bbls OBF lost with cuttings

Cost Item	DWD	DWE	SWD	SWE	TOTAL
GOM OBF Wells Projected to Convert from SBF to OBF Under Zero Discharge					
Unit Cost to Haul and Dispose ($/well)	$161,419	$407,793	$110,715	$236,406	
Unit Cost to Grind and Inject ($/well)	---	---	$83,448	$174,853	
Per Well Cost for Zero Discharge ($/well)	---	---	$105,262	$224,096	
No. Wells	8	25	86	51	170
SUBTOTAL ANNUAL GOM ZD COST ($)	$1,291,352	$10,194,826	$31,910,282	$11,428,885	**$54,825,346**
GOM SBF Wells Projected to Remain as SBF Wells Under Zero Discharge					
Unit Cost to Haul and Dispose ($/well)	$236,963	$575,921	---	---	
Unit Cost to Grind and Inject ($/well)	---	---	---	---	
Per Well Cost for Zero Discharge ($/well)	$236,963	$575,921	---	---	
No. Wells	3	8	0	0	
SUBTOTAL ANNUAL GOM ZD COST ($)	$710,889	$4,607,368	---	---	**$5,318,258**
Total Annual GOM Costs for Zero Discharge ($)					**$60,143,603**
GOM OBF Wells Projected to Continue as OBF Wells					
Unit Cost to Haul and Dispose ($/well)			$110,715	$236,406	
Unit Cost to Grind and Inject ($/well)			$83,448	$174,853	
Weighted Average Unit Disposal Cost ($/well)			$105,262	$224,096	
Number of Wells			34	20	54
Total Cost per Well Type			$3,578,900	$4,481,916	
Total Cost					**$8,060,816**
Total Annual GOM Costs for Zero Discharge ($)					**68,204,419**
GOM Wells Using SBF Assumed to Switch to WBF Under Zero Discharge and Fail WBF Sheen/Tox Limits					
Per Well Cost for Zero Discharge ($/well)	$161,419	$407,793	$105,262	$224,096	
No. Wells	1	2	0	0	
SUBTOTAL ANNUAL GOM ZD COST ($)	**$161,419**	**$815,586**	**$0**	**$0**	**$977,005**

WBF Disposal Analysis: Remaining WBF Wells + 49 SBF > WBF Discharging Wells)

	DWD	DWE	SWD	SWE	TOTAL
Unit Cost to Haul and Dispose ($/well)	$906,022	$2,724,495	$627,810	$1,429,659	
Unit Cost to Grind and Inject ($/well)	$543,102	$1,235,566	$387,454	$768,992	
No. Wells, Total	16	49	511	298	
Projected % Wells to Fail Sheen/Tox Limitations	10.73%	10.73%	10.73%	10.73%	
Projected No. Wells to Fail Sheen/Tox Limitations	2	5	55	32	94
No. Wells Projected to Haul & Land Dispose 80%	2	5	44	26	
No. Wells Projected to Grind & Inject Onsite 20%	0	0	11	6	
Total Cost to Haul & Land Dispose	**$1,812,044**	**$13,622,475**	**$27,623,640**	**$37,171,134**	**$80,229,293**
Total Cost to Grind & Inject	**$0**	**$0**	**$4,261,994**	**$4,613,951**	**$8,875,945**
Total Cost of Disposal, WBF Wells	**$1,812,044**	**$13,622,475**	**$31,885,634**	**$41,785,085**	**$89,105,238**

Total GOM Cost of Disposal, $158,286,662

Summary Compliance Costs for Management of Large Volume SBF Wastes, Existing Sources ('40% OBF Wells, 6% WBF Wells Convert'), 1999$

Lower (0%) WBF Failure Rate Boundary

Baseline Costs: Total Annual

	Baseline Technology(a)	GOM	CA	AK(CI)	Total Per Technology	NOTES
	Discharge with 10.2% retention of base fluid on cuttings from SBF wells	29,437,863	0	0	**29,437,863**	Worksheet No. 1
	Zero Discharge--current OBF users	10,034,296	413,282	516,602	**10,964,179**	Worksheet No.s 1, 2, and 3
	Zero Discharge--current WBF users	0	0	0	**0**	
	TOTAL Per Region	**39,472,159**	**413,282**	**516,602**	**40,402,042**	

Compliance Costs: Total Annual

	Technology Option(b)	GOM	CA	AK(CI)	Total Per Technol	NOTES
BAT-1	Discharges from Cuttings Dryer and FRUs (ROC = 4.03%); SBF wells	35,569,256	0	266,864	**35,836,120**	Worksheet No.s 4, 5, and 6
	Discharges from Cuttings Dryer and FRUs (ROC = 4.03%); OBF wells	5,992,981	413,282	349,706	**6,755,969**	
	Discharges from Cuttings Dryer and FRUs (ROC = 4.03%); WBF wells	0	0	0	**0**	
	TOTAL Per Region	**41,562,237**	**413,282**	**616,570**	**42,592,088**	
BAT-2	Discharges from Cuttings Dryer only (ROC = 3.82%); Zero Discharge FRUs; SBF wells	35,749,388	0	266,864	**36,016,252**	Worksheet No.s 7, 8, and 9
	Discharges from Cuttings Dryer only (ROC = 3.82%); Zero Discharge FRUs; OBF wells	5,992,981	413,282	349,706	**6,755,969**	
	Discharges from Cuttings Dryer only (ROC = 3.82%); Zero Discharge FRUs; WBF wells	0	0	0	**0**	
	TOTAL Per Region	**41,742,369**	**413,282**	**616,570**	**42,772,221**	
BAT-3	Zero Discharge: SBF wells	5,318,258	0	0	**5,318,258**	Worksheet No.s 10, 11, and 12
	Zero Discharge: OBF wells	62,886,162	413,282	516,602	**63,816,045**	
	Zero Discharge: WBF wells	0	0	0	**0**	
	TOTAL Per Region	**68,204,419**	**413,282**	**516,602**	**69,134,303**	

Incremental Compliance Costs: Total Annual

Technology Option	GOM	CA	AK(CI)	Total Per Technol	NOTES
BAT-1: Discharge from Cuttings Dryer and Fines Removal Unit	2,090,078	0	99,968	**2,190,046**	BAT-1 compliance cost :: total baseline cost differential
BAT-2: Discharge from Cuttings Dryer and Zero Discharge of Fines	2,270,210	0	99,968	**2,370,178**	BAT-2 compliance cost :: total baseline cost differential
Zero Discharge	28,732,260	0	0	**28,732,260**	BAT-3 (ZD) compliance cost :: GOM baseline cost differential

WBF-related Costs (Savings)

Technology Option	GOM	CA	AK(CI)	Total Per Technol	NOTES
BAT-1: ROP-related rig cost savings	(33,280,000)	0	0	**(48,832,540)**	
Discharged WBF cost savings	(15,552,540)	0	0		
Zero discharge cost savings	0	0	0		
BAT-2: ROP-related rig cost savings	(33,280,000)	0	0	**(48,832,540)**	
Discharged WBF cost savings	(15,552,540)	0	0		
Zero discharge cost savings	0	0	0		

NET Incremental Compliance Costs: Total Annual

Technology Option	GOM	CA	AK(CI)	Total Per Technol	NOTES
BAT-1: Discharge from Cuttings Dryer and Fines Removal Unit	(46,742,462)	0	99,968	**(46,642,494)**	BAT-1 compliance cost :: total baseline cost differential
BAT-2: Discharge from Cuttings Dryer and Zero Discharge of Fines	(46,562,330)	0	99,968	**(46,462,362)**	BAT-2 compliance cost :: total baseline cost differential
Zero Discharge**	28,732,260	0	0	**28,732,260**	BAT-3 (ZD) compliance cost :: total baseline cost differential

(a) GOM: 857 WBF, 201 SBF wells, 67 OBF wells; CA: 5 WBF, 2 OBF wells; AK 4 WBF, 2 OBF wells
(b) BAT 1: GOM: 803 WBF, 264 SBF wells, 40 OBF wells; CA: 5 WBF, 2 OBF wells; AK 4 WBF, 1 SBF, 1 OBF wells
BAT 2: GOM: 803 WBF, 264 SBF wells, 40 OBF wells; CA: 5 WBF, 2 OBF wells; AK 4 WBF, 1 SBF, 1 OBF wells
BAT 3: GOM: 877 WBF, 11 SBF wells, 237 OBF wells; CA: 5 WBF, 2 OBF wells; AK 4 WBF, 2 OBF wells

Worksheet No. 13
Compliance Cost Estimates (1999$): Baseline Current Practice (BPT)
New Sources; Gulf of Mexico

Technologies:	Discharge of SBF cuttings, add-on cuttings dryer, avg. ret'n= 10.2% (wt) base fluid on cuttings	
Model Well Types:	Deep- and Shallow-water Development	
Per-Well Waste Volumes:		
Deep-water Development:	1,387	bbls waste SBF cuttings (0.2% crude contamination)
	532	bbls SBF lost with cuttings
Shallow-water Development:	917	bbls waste SBF cuttings (0.2% crude contamination)
	352	bbls SBF lost with cuttings

Cost Item	DWD	DWE	TOTAL	
Drilling Fluid Costs for Wells Currently Using SBF				
(SBF@ $221/bbl lost w/ cuttings)	$117,572	$77,792		Cost from vendor
				Average cost for full analysis
Per Well Baseline Cost ($/well)	**$117,572**	**$77,792**		
Unit Cost ($/bbl)	$85	$85		
No. Wells	15	5		
TOTAL ANNUAL BASELINE GOM SBF COST ($)	**$1,763,580**	**$388,960**	**$2,152,540**	Per-well costs x no. of wells
Drilling Fluid Costs for Wells Currently Using OBF				
(OBF@ $79/bbl lost w/ cuttings)				Cost from vendor
Per Well Baseline Cost ($/well)	**$161,419**	**$110,715**		
Unit Cost ($/bbl)	**$116**	**$115**		
No. Wells	0	2		
TOTAL ANNUAL BASELINE GOM OBF COST ($)	**$0**	**$221,430**	**$221,430**	
Drilling Fluid Costs for Wells Currently Using WBF				
(WBF@ $45/bbl lost w/ cuttings)				Cost from vendor
	$906,022	**$627,810**	haul	
Per Well Baseline Cost ($/well)		**$387,454**	inject	
Unit Cost ($/bbl)	**$91**	**$86**		
No. Wells Fail Limits	1	3		
No. Wells	11	27		
TOTAL ANNUAL BASELINE GOM WBF COST ($)	**$906,022**	**$1,643,075**	**$2,549,097**	
TOTAL ANNUAL BASELINE GOM COST ($)			**$4,923,067**	

Summary Compliance Costs for Management of Large Volume SBF Wastes, New + Existing Sources ('40% OBF Wells, 6% WBF Wells Convert'), 1999$

Lower (0%) WBF Failure Rate Boundary

Baseline Costs: Total Annual

	Baseline Technology	GOM	CA	AK(CI)	Total Per Technol	NOTES
	Discharge with 9.42% retention of base fluid	31,590,403	0	0		Worksheet No. 1
	on cuttings (__xxx___ SBF wells in GOM)				**31,590,403**	
	Zero Discharge--current OBF users only					Worksheet No.s 1, 2, and 3
	(xxxx GOM wells; xxxx CA wells; xxxx AK well)	10,255,726	413,282	516,602	**11,185,610**	
	Zero Discharge--current WBF users only					
	(xxxx GOM wells; xxxx CA wells; xxxx AK well)	0	0	0	**0**	
	TOTAL Per Region	**41,846,129**	**413,282**	**516,602**	**42,776,013**	

Compliance Costs: Total Annual

	Technology Option	GOM	CA	AK(CI)	Total Per Technol	NOTES
BAT-1	BAT-1: Discharge from Cuttings Dryer and	37,471,928	0	266,864		Worksheet No.s 4, 5, and 6
	Fines Removal Unit (R = 3.68%)*				**37,738,792**	
	Zero Discharge--current OBF users only					
	(xxxx GOM wells; xxxx CA wells; xxxx AK well)	6,103,696	413,282	349,706	**6,866,684**	
	Zero Discharge--current WBF users only					
	(xxxx GOM wells; xxxx CA wells; xxxx AK well)	0	0	0	**0**	
	TOTAL Per Region	**43,575,624**	**413,282**	**616,570**	**44,605,476**	
BAT-2	BAT-2: Discharge from Cuttings Dryer	37,656,164	0	266,864		Worksheet No.s 7, 8, and 9
	(R = 3.48%) and Zero Discharge of Fines*				**37,923,028**	
	Zero Discharge--current OBF users only					
	(xxxx GOM wells; xxxx CA wells; xxxx AK well)	6,103,696	413,282	349,706	**6,866,684**	
	Zero Discharge--current WBF users only					
	(xxxx GOM wells; xxxx CA wells; xxxx AK well)	0	0	0	**0**	
	TOTAL Per Region	**43,759,860**	**413,282**	**616,570**	**44,789,712**	
BAT-3	BAT 3 Zero Discharge					Worksheet No.s 10, 11, and 12
	(xxxx current SBF wells)	6,029,147	0	0	**6,029,147**	
	Zero Discharge--current OBF users only					
	(xxxx GOM wells; xxxx CA wells; xxxx AK well)	64,925,253	413,282	516,602	**65,855,137**	
	Zero Discharge--current WBF users only					
	(xxxx GOM wells; xxxx CA wells; xxxx AK well)	0	0	0	**0**	
	TOTAL Per Region	**70,954,400**	**413,282**	**516,602**	**71,884,284**	

Incremental Compliance Costs: Total Annual

	Technology Option	GOM	CA	AK(CI)	Total Per Technol	NOTES
	BAT-1: Discharge from Cuttings Dryer and					BAT-1 compliance cost ::
	Fines Removal Unit	1,729,495	0	99,968	**1,829,463**	total baseline cost differential
	BAT-2: Discharge from Cuttings Dryer and					BAT-2 compliance cost ::
	Zero Discharge of Fines	1,913,731	0	99,968	**2,013,699**	total baseline cost differential
	Zero Discharge**					BAT-3 (ZD) compliance cost ::
		29,108,271	0	0	**29,108,271**	GOM baseline cost differential

WBF-related Costs (Savings)

	Technology Option	GOM	CA	AK(CI)	Total Per Technol	NOTES
	BAT-1: ROP-related rig cost savings	(34,720,000)	0	0	**(50,956,045)**	
	Discharged WBF cost savings	(16,236,045)	0	0		
	Zero discharge cost savings	0	0	0		
	BAT-2: ROP-related rig cost savings	(34,720,000)	0	0	**(50,956,045)**	
	Discharged WBF cost savings	(16,236,045)	0	0		
	Zero discharge cost savings	0	0	0		

NET Incremental Compliance Costs: Total Annual

	Technology Option	GOM	CA	AK(CI)	Total Per Technol	NOTES
	BAT-1: Discharge from Cuttings Dryer and					BAT-1 compliance cost ::
	Fines Removal Unit	(49,226,550)	0	99,968	**(49,126,582)**	total baseline cost differential
	BAT-2: Discharge from Cuttings Dryer and					BAT-2 compliance cost ::
	Zero Discharge of Fines	(49,042,314)	0	99,968	**(48,942,346)**	total baseline cost differential
	Zero Discharge**					BAT-3 (ZD) compliance cost ::
		29,108,271	0	0	**29,108,271**	total baseline cost differential

Summary Compliance Costs for Management of Large Volume SBF Wastes, New Sources ('40% OBF Wells, 6% WBF Wells Convert'), 1999$

Lower (0%) WBF Failure Rate Boundary

Baseline Costs: Total Annual

Baseline Technology	GOM	CA	AK(CI)	Total Per Technol	NOTES
Discharge with 9.42% retention of base fluid	2,152,540	0	0		Worksheet No. 1
on cuttings (__xxx___ SBF wells in GOM)				**2,152,540**	
Zero Discharge--current OBF users only					Worksheet No.s 1, 2, and 3
(xxxx GOM wells; xxxx CA wells; xxxx AK well)	221,430	0	0	**221,430**	
Zero Discharge--current WBF users only					
(xxxx GOM wells; xxxx CA wells; xxxx AK well)	0	0	0	**0**	
TOTAL Per Region	**2,373,970**	**0**	**0**	**2,373,970**	

Compliance Costs: Total Annual

	Technology Option	GOM	CA	AK(CI)	Total Per Technol	NOTES
BAT-1	BAT-1: Discharge from Cuttings Dryer and	1,902,672	0	0		Worksheet No.s 4, 5, and 6
	Fines Removal Unit (R = 3.68%)*				**1,902,672**	
	Zero Discharge--current OBF users only					
	(xxxx GOM wells; xxxx CA wells; xxxx AK well)	110,715	0	0	**110,715**	
	Zero Discharge--current WBF users only					
	(xxxx GOM wells; xxxx CA wells; xxxx AK well)	0	0	0	**0**	
	TOTAL Per Region	**2,013,387**	**0**	**0**	**2,013,387**	
BAT-2	BAT-2: Discharge from Cuttings Dryer	1,906,776	0	0		Worksheet No.s 7, 8, and 9
	(R = 3.48%) and Zero Discharge of Fines*				**1,906,776**	
	Zero Discharge--current OBF users only					
	(xxxx GOM wells; xxxx CA wells; xxxx AK well)	110,715	0	0	**110,715**	
	Zero Discharge--current WBF users only					
	(xxxx GOM wells; xxxx CA wells; xxxx AK well)	0	0	0	**0**	
	TOTAL Per Region	**2,017,491**	**0**	**0**	**2,017,491**	
BAT-3	BAT 3 Zero Discharge		0	0		Worksheet No.s 10, 11, and 12
	(xxxx current SBF wells)	710,889			**710,889**	
	Zero Discharge--current OBF users only					
	(xxxx GOM wells; xxxx CA wells; xxxx AK well)	2,039,092	0	0	**2,039,092**	
	Zero Discharge--current WBF users only					
	(xxxx GOM wells; xxxx CA wells; xxxx AK well)	0	0	0	**0**	
	TOTAL Per Region	**2,749,981**	**0**	**0**	**2,749,981**	

Incremental Compliance Costs: Total Annual

Technology Option	GOM	CA	AK(CI)	Total Per Technol	NOTES
BAT-1: Discharge from Cuttings Dryer and					BAT-1 compliance cost ::
Fines Removal Unit	(360,583)	0	0	**(360,583)**	total baseline cost differential
BAT-2: Discharge from Cuttings Dryer and					BAT-2 compliance cost ::
Zero Discharge of Fines	(356,479)	0	0	**(356,479)**	total baseline cost differential
Zero Discharge**					BAT-3 (ZD) compliance cost ::
	376,011	0	0	**376,011**	GOM baseline cost differential

WBF-related Costs (Savings)

Technology Option	GOM	CA	AK(CI)	Total Per Technol	NOTES
BAT-1: ROP-related rig cost savings	(1,440,000)	0	0	**(2,123,505)**	
Discharged WBF cost savings	(683,505)	0	0		
Zero discharge cost savings	0	0	0		
BAT-2: ROP-related rig cost savings	(1,440,000)	0	0	**(2,123,505)**	
Discharged WBF cost savings	(683,505)	0	0		
Zero discharge cost savings	0	0	0		

NET Incremental Compliance Costs: Total Annual

Technology Option	GOM	CA	AK(CI)	Total Per Technol	NOTES
BAT-1: Discharge from Cuttings Dryer and					BAT-1 compliance cost ::
Fines Removal Unit	(2,484,088)	0	0	**(2,484,088)**	total baseline cost differential
BAT-2: Discharge from Cuttings Dryer and					BAT-2 compliance cost ::
Zero Discharge of Fines	(2,479,984)	0	0	**(2,479,984)**	total baseline cost differential
Zero Discharge**					BAT-3 (ZD) compliance cost ::
	376,011	0	0	**376,011**	total baseline cost differential

Worksheet No. 14
Compliance Cost Estimates (1999$): Discharge from Cuttings Dryer and FRUs (BAT 1 Technology) New Sources; Gulf of Mexico

Technology:	Discharge via add-on drill cuttings "dryer;" fines removal unit, avg retention 4.03% (wt) base fluid on cuttings		
Model Well Types:	Deep- and Shallow-water Development		
Per-Well Waste Volumes:			
Deep-water Development:	1,035	bbls waste SBF cuttings (0.2% crude contamination)	
	180	bbls SBF lost with cuttings	
Shallow-water Development:	684	bbls waste SBF cuttings (0.2% crude contamination)	
	119	bbls SBF lost with cuttings	

Cost Item	DWD	SWD	TOTAL	
GOM Wells Currently Using SBF and Discharging Cuttings				
BAT Solids Control Equipment @ $2400/day x rental days (Cuttings dryer plus fines removal unit that reduces base fluid retention from 10.2% to 4.03%)	$47,400	$31,200		Includes all equipment, labor, and materials; days of rental from industry
Drilling Fluid Costs (SBF lost with cuttings @ $221/bbl)	$39,780	$26,299		Cost from vendor
Monitoring Analyses				
SedTox Test	$575	$575		
Crude Contamination of Drilling Fluid @ $50/test	$50	$50		Cost from vendor
Retention of Base Fluids by Retort @ $50/test	$1,300	$1,500		Retort measured once per both discharge points/ 500 ft
TOTAL Cost Per Well ($)	**$89,105**	**$59,624**		
Unit Cost ($/bbl)	$86	$87		
No. Wells	16	8		
TOTAL ANNUAL GOM Cost for SBF Wells ($)	**$1,425,680**	**$476,992**	**$1,902,672**	
GOM Wells Currently Using OBF and Zero Discharge				
Disposal Cost ($10.13/bbl)		$9,289		Includes all equipment, labor, and materials; days of rental from industry
Handling Cost ($4.75/bbl)		$4,356		
Container Rental ($25/box/day * "x" boxes* "y" days to fill & haul)	NA	$7,127		Cost from vendor
Supply Boat Cost ($8,500/day x days to fill and haul)		$62,135		
Drilling Fluid Costs (OBF lost with cuttings @ $79/bbl)		$27,808		
TOTAL Cost Per Well ($)		**$110,715**		
Unit Cost ($/bbl)		**$121**		
No. Wells	0	1		
TOTAL ANNUAL GOM Cost for OBF Wells ($)	**$0**	**$110,715**	**$110,715**	Per-well costs x no. of wells
GOM Wells Currently Using WBF and Zero Discharge				
				Includes all equipment, labor, and materials; days of rental from industry
Unit Cost to Haul and Dispose ($/well)	$906,022	$627,810		
Unit Cost to Grind and Inject ($/well)	$543,102	$387,454		Cost from vendor
Wtd Avg TOTAL Cost Per Well ($)	**$833,438**	**$579,739**		
Unit Cost ($/bbl)	$91	$86		
No. Wells Fail Limits	**1**	**3**		
No. Wells	10	25		
TOTAL ANNUAL GOM Cost for WBF Wells ($)	**$906,022**	**$1,643,075**	**$2,549,097**	
TOTAL ANNUAL GOM Cost for Wells ($)			**$4,562,484**	

Worksheet No. 15
Compliance Cost Estimates (1999$): Discharge from Cuttings Dryer and FRUs (BAT 2 Technology) New Sources; Gulf of Mexico

Technology:	Discharge via add-on drill cuttings "dryer," avg retention 3.82% (wt) base fluid on cuttings; zero discharge of fines
Model Well Types:	Deep- and Shallow-water Development

Per-Well Waste Volumes:

	DWD	SWD
Waste Cuttings @ 3.82% Retention, bbl	999	660
SBF Lost with Cuttings, bbl	166	109
Waste Fines @ 10.2% Retention, bbl	36	24
SBF Lost with Fines, bbl	14	9

Cost Item	DWD	SWD	TOTAL	
GOM Wells Currently Using SBF and Discharging Cuttings: Discharged Portion, Cuttings Dryer				
BAT Solids Control Equipment @ $2400/day x rental days (Cuttings dryer plus fines removal unit that reduces base fluid retention from 10.2 to 4.03%)	$47,400	$31,200		Includes all equipment, labor, and materials; days of rental from industry
Drilling Fluid Costs (SBF lost with cuttings @ $221/bbl)	$36,686	$24,089		
Monitoring Analyses				
SedTox Test	$575	$575		
Crude Contamination of Drilling Fluid @ $50/test	$50	$50		Cost from vendor
Retention of Base Fluids by Retort @ $50/test	$650	$750		Retort measured once / single discharge point/ 500 ft drilled;
TOTAL Cost Per Well ($)	**$85,361**	**$56,664**		
Unit Cost ($/bbl)	$85	$86		
No. Wells	16	8		
TOTAL ANNUAL GOM Cost for SBF Wells ($)	**$1,365,776**	**$453,312**	**1,819,088**	Per-well costs x no. of wells
Zero Discharge Fines Portion				
Zero Discharge of Fines via Hauling				
Disposal Costs @ 10.13/bbl	$365	$243		See Worksheet 4
Handling Costs @ 4.75/bbl	$171	$114		See Worksheet 4
Container Rental @ $25/box/day x days to fill	$495	$366		Orentas 2000
Drilling Fluid Costs @ $221/bbl SBF lost with fines	$3,094	$1,989		Cost from vendor
Total Cost per Well, Fines Portion	$4,125	$2,712		
No. Wells	16	8		
TOTAL ANNUAL GOM Cost for SBF Wells ($)	**$65,995**	**$21,693**	**87,688**	
GOM Wells Currently Using OBF and Zero Discharge				
Disposal Cost ($10.13/bbl)		$9,289		Includes all equipment, labor, and materials; days of rental from industry
Handling Cost ($4.75/bbl)		$4,356		
Container Rental ($25/box/day * "x" boxes* "y" days to fill & haul)	NA	$7,127		Cost from vendor
Supply Boat Cost ($8,500/day)		$62,135		
Drilling Fluid Costs (OBF lost with cuttings @ $79/bbl)		$27,808		
TOTAL Cost Per Well ($)		$110,715		
Unit Cost ($/bbl)		$121		
No. Wells	0	1		
TOTAL ANNUAL GOM Cost for OBF Wells ($)	**$0**	**$110,715**	**$110,715**	Per-well costs x no. of wells
GOM Wells Currently Using WBF and Zero Discharge				
Unit Cost to Haul and Dispose ($/well)	$906,022	$627,810		Includes all equipment, labor, and materials; days of rental from industry
Unit Cost to Grind and Inject ($/well)	$543,102	$387,454		Cost from vendor
Wtd Avg TOTAL Cost Per Well ($)	**$833,438**	**$579,739**		
Unit Cost ($/bbl)	$91	$86		
No. Wells Fail Limits	**1**	**3**		
No. Wells	10	25		
TOTAL ANNUAL GOM Cost for WBF Wells ($)	**$906,022**	**$1,643,075**	**$2,549,097**	Per-well costs x no. of wells
TOTAL ANNUAL GOM Cost for Wells ($)			**$4,566,588**	

Percentage WBF Wells Projected to Fail Sheen/Toxicity Limit and Have a Zero Discharge Restriction: 10.73%

Zero Discharge of Fines via Hauling:		
Disposal Costs @ $10.13/bbl	10.13	See Worksheet 10
Handling Cost @ $4.75/bbl	4.75	See Worksheet 10
Container Rental @ $25/box/day	25	Orentas 2000
Number boxes	2	2
Number days to fil and haul	**9.90**	**7.31**
SedTox Test	575	

Worksheet No. 16
Compliance Cost Estimates (1999$): Zero Discharge (BAT 3 Technology)
New Sources; Gulf of Mexico

Technology:	Zero-Discharge via Haul and Land-Dispose	
Model Well Types:	Deep- and Shallow-water Development	
Per-Well Waste Volumes:		
Deep-water Development:	1,387	bbls waste SBF (OBF) cuttings (0.2% crude contamination)
	532	bbls SBF (OBF) lost with cuttings
Shallow-water Development:	917	bbls waste OBF (SBF) cuttings (0.2% crude contamination)
	352	bbls OBF (SBF) lost with cuttings

Cost Item	DWD	SWD	
GOM Wells Using SBF Assumed to Switch to OBF Under Zero Discharge			
Disposal Cost ($10.13/bbl)	$14,050	$9,289	Average of $9.50 and $10.75, quoted from vendors
Handling Cost ($4.75/bbl)	$6,588	$4,356	Vendor quote; includes crains, labor, trucks to landfill, etc.
Container Rental ($25/box/day * "x" boxes* "y" days to fill & haul)	$14,603	$7,127	Vendor cost estimate; 39 boxes estimated capacity required
Supply Boat Cost ($8,500/day)	$84,150	$62,135	Vendors
Drilling Fluid Costs (OBF lost with cuttings @ $79/bbl)	$42,028	$27,808	Vendor quote
TOTAL Cost per Model Well ($)	**$161,419**	**$110,715**	
Unit Cost to Haul and Dispose ($/bbl)	$176	$121	
GOM Wells Using SBF Assumed to Retain SBF Under Zero Discharge			
Disposal Cost ($10.13/bbl)	$14,050	$9,289	Average of $9.50 and $10.75, quoted from vendors
Handling Cost ($4.75/bbl)	$6,588	$4,356	Vendor quote; includes crains, labor, trucks to landfill, etc.
Container Rental ($25/box/day * "x" boxes* "y" days to fill & haul)	$14,603	$7,127	Vendor cost estimate; 39 boxes estimated capacity required
Supply Boat Cost ($8,500/day)	$84,150	$62,135	Vendors
Drilling Fluid Costs (SBF lost with cuttings @ $221/bbl)	$117,572	$77,792	Vendor quote
TOTAL Cost per Model Well ($)	**$236,963**	**$160,699**	
Unit Cost to Haul and Dispose ($/bbl)	$171	$175	
GOM Wells Using WBF Assumed to Retain WBF Under Zero Discharge			
Disposal Cost ($10.13/bbl)	$102,495	$75,681	Average of $9.50 and $10.75, quoted from vendors
Handling Cost ($4.75/bbl)	$48,061	$35,487	Vendor quote; includes crains, labor, trucks to landfill, etc.
Container Rental ($25/box/day * "x" boxes* "y" days to fill & haul)	$213,124	$116,198	Vendor cost estimate; 39 boxes estimated capacity required
Supply Boat Cost ($8,500/day)	$168,300	$124,270	Vendors
Drilling Fluid Costs (WBF lost with cuttings @ $45/bbl)	$374,042	$276,174	Vendor quote
TOTAL Cost per Model Well ($)	**$906,022**	**$627,810**	
Unit Cost to Haul and Dispose ($/bbl)	$90	$84	

Worksheet No. 17
Compliance Cost Estimates (1999$): Zero Discharge (BAT 3 Technology)
New Sources; Gulf of Mexico

Technology:	Zero-Discharge via On-site Grinding and Injection	
Model Well Types:	Deep- and Shallow-water Development	
Per-Well Waste Volumes:		
Deep-water Development:	1,387	bbls waste SBF cuttings (0.2% crude contamination)
	532	bbls SBF lost with cuttings
Shallow-water Development:	917	bbls waste OBF cuttings (0.2% crude contamination)
	352	bbls OBF lost with cuttings

Cost Item	DWD	SWD	Information below is detailed in
GOM Wells Using SBF Assumed to Switch to OBF Under Zero Discharge			
Onsite Injection System @ $4280/day (drilling days = 40% of time on rig, thus rental days = 2.5 x drilling days)	NA	$ 55,640	Includes all equipment, labor, and services; vacuum system used to transport cuttings
Drilling Fluid Costs (OBF lost with cuttings @ $79/bbl)		$ 27,808	Cost from vendor
TOTAL Cost per Model Well ($)		**$ 83,448**	
Unit Cost to Grind and Inject ($/bbl)		$ 91	
GOM Wells Using SBF Assumed to Retain SBF Under Zero Discharge			
Onsite Injection System @ $4280/day (drilling days = 40% of time on rig)	NA	$ 55,640	Includes all equipment, labor, and services; vacuum system used to transport cuttings
Drilling Fluid Costs (SBF lost with cuttings @ $221/bbl)		$ 77,792	Cost from vendor
TOTAL Cost per Model Well ($)		**$ 133,432**	
Unit Cost to Grind and Inject ($/bbl)		$ 146	
GOM Wells Using WBF Assumed to Retain WBF Under Zero Discharge			
Onsite Injection System @ $4280/day (drilling days = 40% of time on rig)	$ 169,060	$ 111,280	Includes all equipment, labor, and services; vacuum system used to transport cuttings
Drilling Fluid Costs (SBF lost with cuttings @ $45/bbl)	$ 374,042	$ 276,174	Cost from vendor
TOTAL Cost per Model Well ($)	**$ 543,102**	**$ 387,454**	
Unit Cost to Grind and Inject ($/bbl)	$ 54	$ 52	

Drilling days	**7.9**	**5.2**
drilling days = 40% of time on rig	0.4	0.4
Onsite Injection System, /day	4280	4280

Worksheet No. 18
Compliance Cost Estimates (1999$): Zero Discharge (BAT 3 Technology)
New Sources; Gulf of Mexico

Technology:	Deep- and 80% Shallow-water Wells Haul & Land-Dispose; 20% Shallow Inject	
Model Well Types:	Deep- and Shallow-water Development	
Per-Well Waste Volumes:		
Deep-water Development:	1,387	bbls waste SBF cuttings (0.2% crude contamination)
	532	bbls SBF lost with cuttings
Shallow-water Development:	917	bbls waste OBF cuttings (0.2% crude contamination)
	352	bbls OBF lost with cuttings

Cost Item	DWD	SWD	TOTAL	Notes
GOM Wells Using SBF Assumed to Switch to OBF Under Zero Discharge				
Unit Cost to Haul and Dispose ($/well)	161,419	110,715		From Worksheet No. 3
Unit Cost to Grind and Inject ($/well)	NA	83,448		From Worksheet No. 4
Weighted Average Per Well Cost ($/well)	**161,419**	**105,262**		Assumes 80% of shallow water sells haul,
Weighted Average Unit Cost ($/bbl)	116	115		
No. Wells	8	7		
SUBTOTAL ANNUAL GOM ZD COST ($)	1,291,352	747,739	**2,039,092**	
GOM Wells Using SBF Assumed to Retain SBF Under Zero Discharge				
Unit Cost to Haul and Dispose ($/well)	236,963	160,699		From Worksheet No. 3
Unit Cost to Grind and Inject ($/well)	NA	133,432		
Weighted Average Per Well Cost ($/well)	**236,963**	**155,246**		Assumes 100% of deep water wells haul
Weighted Average Unit Cost ($/bbl)	171	146		
No. Wells	3	0		
SUBTOTAL ANNUAL GOM ZD COST ($)	710,889	0	**710,889**	
GOM Wells Using WBF Assumed to Retain WBF Under Zero Discharge				
Unit Cost to Haul and Dispose ($/well)	906,022	627,810		From Worksheet No. 3
Unit Cost to Grind and Inject ($/well)	543,102	387,454		
Weighted Average Per Well Cost ($/well)	**833,438**	**579,739**		Assumes 100% of deep water wells haul
Weighted Average Unit Cost ($/bbl)	91	86		
No. Wells Fail Limits	**2**	**3**		
No. Wells	15	27		
SUBTOTAL ANNUAL GOM ZD COST ($)	1,812,044	1,643,075	**3,455,119**	
Total Annual GOM Costs for Zero Discharge ($)			**6,205,100**	

Worksheet No. 19
Compliance Cost Estimates (1999$), Small Volume SBF Wastes
BAT Option (Zero Discharge)

[Estimated Small-Volume Waste Amount per well = 75 bbls]

		Existing Sources			New Sources			Total Existing & New Sources		
Cost Item	**Cost**	**Baseline**	**BAT 1 & 2**	**BAT 3**	**Baseline**	**BAT 1 & 2**	**BAT 3**	**Baseline**	**BAT 1 & 2**	**BAT 3**
GOM										
(Costs from Wksht No. 10)										
Disposal cost @ $10.13/bbl	$760									
Handling cost @ 4.75/bbl	$356									
Container rental @ $25/25-bbl box/day	$105									
Cost Per Well	$1,221									
Total Number of Wells		201	264	11	20	24	3	221	288	14
Total Regional Cost		**$245,421**	**$322,344**	**$13,431**	**$24,420**	**$29,304**	**$3,663**	**$269,841**	**$351,648**	**$17,094**
CALIFORNIA										
(no longer applicable: no SBF wells)										
Disposal cost @ $12.47/bbl	$935									
Handling cost @ $5.86/bbl	$440									
Container Rental @ $40/25-bbl box/day	$120									
Trucking cost @ $354/50-bbl truckload	$708									
Cost Per Well	$2,203									
Total Number of Wells		0	0	0	0	0	0	0	0	0
Total Regional Cost		**$0**	**$0**	**$0**	**$0**	**$0**	**$0**	**$0**	**$0**	**$0**
COOK INLET (not applicable; wastes										
injected onsite, no add'l cost)										
Disposal cost @ $540 per 8-bbl box	$5,400									
8-bbl box purchase cost @ $135/box	$1,350									
Trucking cost @ $1,944 per 8-box truckload	$3,888									
Cost Per Well	$10,638									
Total Number of Wells		0	0	0	0	0	0	0	0	0
Total Regional Cost		**$0**	**$0**	**$0**	**$0**	**$0**	**$0**	**$0**	**$0**	**$0**
Total Annual Cost		**$245,421**	**$322,344**	**$13,431**	**$24,420**	**$29,304**	**$3,663**	**$269,841**	**$351,648**	**$17,094**

Worksheet No. 20:

WBF Upper Bound (10.73%) Analysis for Zero Discharge Wells

(Costs incurred only if WBF wells are projected to fail toxicity of sheen limits)

WBF Disposal Analysis

WBF Waste Volumes (per ODD data)

Deep-water Devel	1,901	bbls cuttings
	8,217	bbls WBF discharged
Deep-water Explor	4,376	bbls cuttings
	18,916	bbls WBF discharged
Shallow-water Develop	1,404	bbls cuttings
	6,067	bbls WBF discharged
Shallow-water Explor	2,723	bbls cuttings
	11,769	bbls WBF discharged

WBF Disposal Analysis

	DWD	DWE	SWD	SWE
Disposal Cost ($10.13/bbl)	$102,495	$235,948	$75,681	$146,804
Handling Cost ($4.75/bbl)	$48,061	$110,637	$35,487	$68,837
Container Rental x WBF days to fill and haul	$213,124	$1,129,414	$116,198	$437,227
Supply Boat Cost ($8,500/day) x WBF days to fill and haul	$168,300	$387,430	$124,270	$241,060
Drilling Fluid Costs	$374,042	$861,066.00	$276,174	$535,732
TOTAL Cost / Model Well ($)	$906,022	$2,724,495	$627,810	$1,429,659

5.00%	adherent drilling fluid
$45.00	per bbl, WBF

Worksheet No. 21: Baseline Current Practice (BPT), Existing Sources, California

WBF Upper Bound (10.73%) Analysis for Zero Discharge Wells

(Costs incurred only if WBF wells are projected to fail their toxicity or sheen limits)

WBF Cuttings, bbl/well (from ODD)	DWD	1,901	bbls waste cuttings	
WBDrilling Fluid, bbl/well (from ODD)	DWD	8,217	bbls WBF discharged	
WBF Cuttings, bbl/well (from ODD)	DWE	4,376	bbls waste cuttings	
WBDrilling Fluid, bbl/well (from ODD)	DWE	18,916	bbls WBF discharged	
WBF Cuttings, bbl/well (from ODD)	SWD	1,404	bbls waste cuttings	
WBDrilling Fluid, bbl/well (from ODD)	SWD	6,067	bbls WBF discharged	
WBF Cuttings, bbl/well (from ODD)	SWE	2,723	bbls waste cuttings	
WBDrilling Fluid, bbl/well (from ODD)	SWE	11,769	bbls WBF discharged	
% WBF wells projected to fail toxicity and/or /sheen limitations		10.73%		

WBF HAUL & LAND DISPOSE COSTS	**DWD**	**DWE**	**SWD**	**SWE**	
Disposal Cost ($ 8.41/bbl)	$85,123	$195,957	$62,855	$121,922	
Handling Cost ($ 3.95/bbl)	$40,008	$92,100	$29,542	$57,304	
Container Rental	$341,352	$1,804,968	$186,551	$703,328	
($40/box/day * "x" boxes* "y" days to fill & haul)					
Supply Boat Cost ($8,500/day x days to fill and haul)	$168,300	$387,430	$124,270	$241,060	
Trucking Cost ($354/truck load)	$76,582	$175,855	$56,727	$109,909	
Drilling Fluid Costs	$728,496	$1,677,024	$537,912	$1,043,424	
(WBF lost with cuttings @ $72/bbl)					
No. Wells	0	0	3	2	
Total Cost / WBF Well (Haul)	**$1,439,861**	**$4,333,333**	**$997,860**	**$2,276,949**	
No. Wells Fail Limits	0	0	0	0	
TOTAL CA WBF Haul & Land Dispose Costs	**$0**	**$0**	**$0**	**$0**	**$0**
Unit Costs	**DWD**	**DWE**	**SWD**	**SWE**	
bbl waste,OBF	1,387	3,085	917	1,921	
no. bxx waste,OBF	59	131	39	82	
bbl/bx	23.5	23.5	23.5	23.4	
bbl WBF, tot	10,118	23,292	7,471	14,492	
bxx WBF	431	990	319	620	
Days to fill & haul , WBF	**19.8**	**45.58**	**14.62**	**28.36**	
Container Rental	$40	$40	$40	$40	
bx/trk	2	2	2	2	
no trks	216	496	160	310	
cost/truck	$355	$355	$355	$355	
WBF cost (+CA multiplier, 1.6)	$72.00	$72.00	$72.00	$72.00	

Worksheet No. 21A: Baseline Current Practice (BPT), Existing Sources, California

WBF Upper Bound (10.73%) Analysis for Zero Discharge Wells

(Costs incurred only if WBF wells are projected to fail their toxicity or sheen limits)

WBF Cuttings, bbl/well (from ODD)	DWD	1,901	bbls waste cuttings		
WBDrilling Fluid, bbl/well (from ODD)	DWD	8,217	bbls WBF discharged		
WBF Cuttings, bbl/well (from ODD)	DWE	4,376	bbls waste cuttings		
WBDrilling Fluid, bbl/well (from ODD)	DWE	18,916	bbls WBF discharged		
WBF Cuttings, bbl/well (from ODD)	SWD	1,404	bbls waste cuttings		
WBDrilling Fluid, bbl/well (from ODD)	SWD	6,067	bbls WBF discharged		
WBF Cuttings, bbl/well (from ODD)	SWE	2,723	bbls waste cuttings		
WBDrilling Fluid, bbl/well (from ODD)	SWE	11,769	bbls WBF discharged		
% WBF wells projected to fail toxicity and/or /sheen limitations		10.73%			
WBF GRIND & INJECT COSTS	**DWD**	**DWE**	**SWD**	**SWE**	
Onsite Injection System @ $4280/day x rental days x CA geographic multiplier	$299,600	$135,248	$89,024	$186,608	
Drilling Fluid Costs	$728,496	$1,677,024	$537,912	$1,043,424	
Total Cost / WBF Well (Grind & Inject)	**$1,028,096**	**$1,812,272**	**$626,936**	**$1,230,032**	
Unit Cost ($/bbl)	$102	$78	$84	$0	
No. Wells Fail Limits	0	0	0	0	
No. Wells	0	0	1	1	
TOTAL CA WBF Grind & Inject Costs	**$0**	**$0**	**$0**	**$0**	**$0**
Unit Costs	**DWD**	**DWE**	**SWD**	**SWE**	
Onsite Inject System	$4,280	$4,280	$4,280	$4,280	
Drilling days	17.5	7.9	5.2	10.9	
Drilling days :Operating Days	0.4	0.4	0.4	0.4	
Rental Days	**43.8**	**19.8**	**13.0**	**27.3**	
Geographic multiplier	1.6	1.6	1.6	1.6	
WBF Drilling Fluid	$45.00	$45.00	$45.00	$45.00	
bbl WBF Lost to Disposal	10,118	23,292	7,471	14,492	
lb/bbl wet cuttings (cuttings + 5% df)	566				
lb/bbl WBF	461				
Disposal Cost ($ 8.41/bbl)	$85,123	$195,957	$62,855	$121,922	
WBDrilling Fluid + Cuttings, bbl/well (from ODD)	10,118	23,292	7,471	14,492	

Worksheet No. 22A: BPT, Existing Sources, Alaska

WBF Upper Bound (10.73%) Analysis for Zero Discharge Wells

(Costs incurred only if WBF wells are projected to fail their toxicity or sheen limits)

WBDrilling Fluid, bbl/day (from ODD)

SWD	1,404	bbls waste cuttings (0.2% crude contamination)
SWD	6,067	bbls WBF discharged
SWE	2,723	bbls waste cuttings (0.2% crude contamination)
SWE	11,769	bbls WBF discharged

WBF DISPOSAL ANALYSIS

	DWD	DWE	SWD	SWE	
Onsite Injection System @ $8560/day	NA	NA	$222,560	$466,520	2x factor for increased drilling time for WBF compared to OBF/SBF
Drilling Fluid Cost			$27,302	$52,961	
Total Cost / Model Well			$249,862	$519,481	
Unit Cost ($/bbl)			$178	$191	
No. Wells			3	1	
No. Wells Fail Limts			0	0	
Onsite Injection System @ $8560/day			$0	$0	
Total Annual Baseline WBF Cook Inlet Cost($)				**$0**	

5.00% adherent fluid

$90.00 /bbl, AK WBF

GOM WBF	$45.00
AK:GOM multiplier	2

% WBF wells projected to fail toxicity and/or /sheen limitations 10.73%

WORKSHEET 23:
WBF COST ADJUSTMENTS TO BAT 1 AND BAT 2 EXISTING SOURCE OPTIONS

REDUCTION IN RIG TIME-ASSOCIATED COSTS	DWD	DWE	SWD	SWE	Totals
No. days, SBF interval	**7.9**	**17.5**	**5.2**	**10.9**	
WBF-to-SBF drilling efficiency	0.5	0.5	0.5	0.5	
Estimated days to drill, WBF	15.8	35.0	10.4	21.8	
Additional days required to drill, WBF	7.9	17.5	5.2	10.9	
Projected no. WBF > SBF wells (BAT 1,2)	1	2	32	19	
Estimated drilling day reductions	8	35	166	207	
Estimated average daily rig cost	$80,000	$80,000	$80,000	$80,000	
Estimated rig-time cost reductions, per well type	$640,000	$2,800,000	$13,280,000	$16,560,000	
Total estimated WBF zero discharge disposal costs, per well type					**$33,280,000**

COST OF DISCHARGED WBF	DWD	DWE	SWD	SWE	
Estimated days to drill, WBF	15.8	35.0	10.4	21.8	
Average daily WBF discharge rate, bbl /day	415	415	415	415	
Projected no. WBF > SBF wells (BAT 1,2)	1	2	32	19	
Estimated drilling day reductions	15.8	70	332.8	414.2	
Average daily WBF discharge rate, bbl /day	415	415	415	415	
Estimated WBF discharge, bbl	6,557	29,050	138,112	171,893	
Estimated average WBF cost, per bbl	$45.00	$45.00	$45.00	$45.00	
Estimated WBF discharge costs, per well type	$295,065	$1,307,250	$6,215,040	$7,735,185	
Total estimated WBF zero discharge disposal cost					**$15,552,540**

ZERO DISCHARGE COSTS, WBF WELLS PROJECTED TO FAIL PERMIT LIMITS AND REQUIRE ZERO DISCHARGE		DWD	DWE	SWD	SWE	
Projected no. WBF > SBF wells (BAT 1,2)		1	2	32	19	
% WBF wells failing permit limits		10.73%	10.73%	10.73%	10.73%	
Estimated WBF wells requiring zero discharge		0	0	3	2	
	haul	0	0	2	2	
	inject	0	0	1	0	
Estimated zero discharge cost per well						
	haul	$906,022	$2,724,495	$627,810	$1,429,659	
	inject	$543,102	$1,235,566	$387,454	$768,992	
Estimated zero discharge cost per well hauled		$0	$0	$1,255,620	$2,859,318	
Estimated zero discharge cost per well injected		$0	$0	$387,454	$0	
Estimated WBF zero discharge disposal costs, per well type		$0	$0	$1,643,074	$2,859,318	
Total estimated WBF zero discharge disposal costs,						**$4,502,392**

Total estimated WBF cost adjustments	**$53,334,932**

WORKSHEET 23A:
WBF COST ADJUSTMENTS TO BAT 1 AND BAT 2 NEW SOURCE OPTIONS

REDUCTION IN RIG TIME-ASSOCIATED COSTS	DWD	DWE	SWD	SWE	Totals
No. days, SBF interval	**7.9**	**17.5**	**5.2**	**10.9**	
WBF-to-SBF drilling efficiency	0.5	0.5	0.5	0.5	
Estimated days to drill, WBF	15.8	35.0	10.4	21.8	
Additional days required to drill, WBF	7.9	17.5	5.2	10.9	
Projected no. WBF > SBF wells (BAT 1,2)	1	0	2	0	
Estimated drilling day reductions	8	0	10	0	
Estimated average daily rig cost	$80,000	$80,000	$80,000	$80,000	
Estimated rig-time cost reductions, per well type	$640,000	$0	$800,000	$0	
Total estimated WBF zero discharge disposal costs, per well type					**$1,440,000**

COST OF DISCHARGED WBF	DWD	DWE	SWD	SWE	
Estimated days to drill, WBF	15.8	35.0	10.4	21.8	
Average daily WBF discharge rate, bbl /day	415	415	415	415	
Projected no. WBF > SBF wells (BAT 1,2)	1	0	2	0	
Estimated drilling day reductions	15.8	0	20.8	0	
Average daily WBF discharge rate, bbl /day	415	415	415	415	
Estimated WBF discharge, bbl	6,557	0	8,632	0	
Estimated average WBF cost, per bbl	$45.00	$45.00	$45.00	$45.00	
Estimated WBF discharge costs, per well type	$295,065	$0	$388,440	$0	
Total estimated WBF zero discharge disposal cost					**$683,505**

ZERO DISCHARGE COSTS, WBF WELLS PROJECTED TO FAIL PERMIT LIMITS AND REQUIRE ZERO DISCHARGE		DWD	DWE	SWD	SWE	
Projected no. WBF > SBF wells (BAT 1,2)		1	0	2	0	
% WBF wells failing permit limits		10.73%	10.73%	10.73%	10.73%	
Estimated WBF wells requiring zero discharge		0	0	0	0	
	haul	0	0	0	0	
	inject	0	0	0	0	
Estimated zero discharge cost per well						
	haul	$906,022	$2,724,495	$627,810	$1,429,659	
	inject	$543,102	$1,235,566	$387,454	$768,992	
Estimated zero discharge cost per well hauled		$0	$0	$0	$0	
Estimated zero discharge cost per well injected		$0	$0	$0	$0	
Estimated WBF zero discharge disposal costs, per well type		$0	$0	$0	$0	
Total estimated WBF zero discharge disposal costs,						**$0**

Total estimated WBF cost adjustments	**$2,123,505**

APPENDIX VIII-3

(Deleted)

APPENDIX VIII-4

Pollutant Loadings (Removals) Worksheets

WORKSHEET No. 1:
Deep Water Development Model Well

BPT Baseline Loadings **Model Well:** **DWD** **Existing Sources**

Technology = Discharge Assuming 10.20% (wt) Retention on Discharged Cuttings and 0.2% (vol.) Crude Contamination

Dry Cuttings Generated per Well (lbs) = 778,050

Whole Drilling Fluid Discharged per Well (bbl) = 533

Pollutant Name	Annual Pollutant Loadings (lbs.) per DWD Model SBF Well	Annual Pollutant Loadings (lbs.) per DWD Model OBF Well
Conventional Pollutants		
Total Oil as SBF Basefluid	101,357.9	0
Total Oil as Formation Oil	313.0	0
Total Oil (SBF Basefluid + Form. Oil)	101,670.9	0
TSS (associated with discharged SBF)	71,166.2	0
TSS (associated with dry cuttings)	778,050.0	0
TSS (total)	849,216.2	0
Total Conventional Pollutants (this value used in subsequent eng./nwqi/ea/econ. modeling)	**950,887.1**	0.0
Priority Pollutant Organics		
Naphthalene	0.5347	0
Fluorene	0.2916	0
Phenanthrene	0.6917	0
Phenol	0.0019	0
Total Organic Priority Pollutants	**1.5199**	0.0
Priority Pollutants, Metals		
Cadmium	0.0783	0
Mercury	0.0071	0
Antimony	0.4056	0
Arsenic	0.5053	0
Berylium	0.0498	0
Chromium	17.0799	0
Copper	1.3308	0
Lead	2.4979	0
Nickel	0.9607	0
Selenium	0.0783	0
Silver	0.0498	0
Thallium	0.0854	0
Zinc	14.2688	0
Total Metals Priority Pollutants	**37.3978**	0.0

BPT Baseline Loadings **Model Well:** **DWD**
Existing Sources

Technology = Discharge Assuming 10.20% (wt) Retention on Discharged Cuttings and 0.2% (vol.) Crude Contamination

Pollutant Name	Annual Pollutant Loadings (lbs.) per DWD Model SBF Well	Annual Pollutant Loadings (lbs.) per DWD Model OBF Well
Non-Conventional Pollutants		
Aluminum	645.4704	0
Barium	41845.7278	0
Iron	1091.9956	0
Tin	1.0390	0
Titanium	6.2270	0
Alkylated benzenes	3.0099	0
Alkylated naphthalenes	28.2970	0
Alkylated fluorenes	3.4063	0
Alkylated phenanthrenes	4.3036	0
Alkylated phenols	0.0166	0
Total biphenyls	5.5936	0
Total dibenzothiophenes	0.2384	0
Total Non-Conventional Pollutants	**43,635.3**	0.0
Total Pollutant Loadings *	994,561.4	0.0

* Sum Total of Conventional, Priority, and Non-Conventional Pollutants

BAT/NSPS Option 1 Loadings **Model Well:** **DWD**
Existing Sources

Technology = Discharge Assuming 4.03% (wt) Retention on Discharged Cuttings and 0.2% (vol.) Crude Contamination

Dry Cuttings Generated per Well (lbs) = 778,050

Whole Drilling Fluid Discharged per Well (bbl) = 180.5

Pollutant Name	Annual Pollutant Loadings (lbs.) per DWD Model SBF Well	Annual Pollutant Reductions (lbs.) per DWD Model SBF Well [BPT Load-Option Load]	Annual Pollutant Reductions (lbs.) per DWD Model OBF Well [BPT Load-Option Load]
Conventional Pollutants			
Total Oil as SBF Basefluid	34,296.1	67,061.8	(34,296.1)
Total Oil as Formation Oil	105.9	207.1	(105.9)
Total Oil (SBF Basefluid + Form. Oil)	34,402.0	67,268.9	(34,402.0)
TSS (associated with discharged SBF)	24,080.3	47,085.9	(24,080.3)
TSS (associated with dry cuttings)	778,050.0	0.0	(778,050.0)
TSS (total)	802,130.3	47,085.9	(802,130.3)
Total Conventional Pollutants (this value used in subsequent eng./nwqi/ea/econ. modeling)	836,532.3	114,354.8	(836,532.3)
Priority Pollutant Organics			
Naphthalene	0.1809	0.3537	(0.1809)
Fluorene	0.0987	0.1930	(0.0987)
Phenanthrene	0.2341	0.4576	(0.2341)
Phenol	0.0006	0.0012	(0.0006)
Total Organic Priority Pollutants	0.5143	1.0056	(0.5143)
Priority Pollutants, Metals			
Cadmium	0.0265	0.0518	(0.0265)
Mercury	0.0024	0.0047	(0.0024)
Antimony	0.1373	0.2684	(0.1373)
Arsenic	0.1710	0.3343	(0.1710)
Berylium	0.0169	0.0330	(0.0169)
Chromium	5.7793	11.3006	(5.7793)
Copper	0.4503	0.8805	(0.4503)
Lead	0.8452	1.6527	(0.8452)
Nickel	0.3251	0.6357	(0.3251)
Selenium	0.0265	0.0518	(0.0265)
Silver	0.0169	0.0330	(0.0169)
Thallium	0.0289	0.0565	(0.0289)
Zinc	4.8281	9.4407	(4.8281)
Total Metals Priority Pollutants	12.6542	24.7437	(12.6542)

BAT/NSPS Option 1 Loadings **Model Well:** **DWD**
Existing Sources

Technology = Discharge Assuming 4.03% (wt) Retention on Discharged Cuttings and 0.2% (vol.) Crude Contamination

Pollutant Name	Annual Pollutant Loadings (lbs.) per DWD Model SBF Well	Annual Pollutant Reductions (lbs.) per DWD Model SBF Well [BPT Load-Option Load]	Annual Pollutant Reductions (lbs.) per DWD Model OBF Well [BPT Load-Option Load]
Non-Conventional Pollutants			
Aluminum	218.4055	427.0648	(218.4055)
Barium	14159.1918	27,686.5360	(14,159.1918)
Iron	369.4947	722.5009	(369.4947)
Tin	0.3516	0.6875	(0.3516)
Titanium	2.1070	4.1200	(2.1070)
Alkylated benzenes	1.0185	1.9914	(1.0185)
Alkylated naphthalenes	9.5756	18.7214	(9.5756)
Alkylated fluorenes	1.1527	2.2536	(1.1527)
Alkylated phenanthrenes	1.4563	2.8473	(1.4563)
Alkylated phenols	0.0056	0.0110	(0.0056)
Total biphenyls	1.8928	3.7007	(1.8928)
Total dibenzothiophenes	0.0807	0.1577	(0.0807)
Total Non-Conventional Pollutants	14,764.7	28,870.6	(14,764.7)
Total Pollutant Loadings *	851,310.2	143,251.2	(851,310.2)

* Sum Total of Conventional, Priority, and Non-Conventional Pollutants

BAT/NSPS Option 2 Loadings **Model Well:** **DWD**
Existing Sources

Technology = Discharge Assuming 3.82% (wt) Retention on Discharged Cuttings and 0.2% (vol.) Crude Contamination

Dry Cuttings Generated per Well (lbs) = 758,397
Whole Drilling Fluid Discharged per Well (bbl) = 165.9

Pollutant Name	Annual Pollutant Loadings (lbs.) per DWD Model SBF Well	Annual Pollutant Reductions (lbs.) per DWD Model SBF Well [BPT Load-Option Load]	Annual Pollutant Reductions (lbs.) per DWD Model OBF Well [BPT Load-Option Load]
Conventional Pollutants			
Total Oil as SBF Basefluid	31,533.7	69,824.2	(31,533.7)
Total Oil as Formation Oil	97.4	215.6	(97.4)
Total Oil (SBF Basefluid + Form. Oil)	31,631.1	70,039.8	(31,631.1)
TSS (associated with discharged SBF)	22,140.7	49,025.5	(22,140.7)
TSS (associated with dry cuttings)	758,396.9	19,653.1	(758,396.9)
TSS (total)	780,537.6	68,678.7	(780,537.6)
Total Conventional Pollutants (this value used in subsequent eng./nwqi/ea/econ. modeling)	812,168.6	138,718.5	(812,168.6)
Priority Pollutant Organics			
Naphthalene	0.1663	0.3684	(0.1663)
Fluorene	0.0907	0.2009	(0.0907)
Phenanthrene	0.2151	0.4766	(0.2151)
Phenol	0.0006	0.0013	(0.0006)
Total Organic Priority Pollutants	0.4727	1.0472	(0.4727)
Priority Pollutants, Metals			
Cadmium	0.0244	0.0539	(0.0244)
Mercury	0.0022	0.0049	(0.0022)
Antimony	0.1262	0.2794	(0.1262)
Arsenic	0.1572	0.3481	(0.1572)
Berylium	0.0155	0.0343	(0.0155)
Chromium	5.3138	11.7661	(5.3138)
Copper	0.4140	0.9168	(0.4140)
Lead	0.7771	1.7208	(0.7771)
Nickel	0.2989	0.6618	(0.2989)
Selenium	0.0244	0.0539	(0.0244)
Silver	0.0155	0.0343	(0.0155)
Thallium	0.0266	0.0588	(0.0266)
Zinc	4.4392	9.8296	(4.4392)
Total Metals Priority Pollutants	11.6349	25.8	(11.6349)

BAT/NSPS Option 2 Loadings **Model Well:** **DWD**
Existing Sources

Technology = Discharge Assuming 3.82% (wt) Retention on Discharged Cuttings and 0.2% (vol.) Crude Contamination

Pollutant Name	Annual Pollutant Loadings (lbs.) per DWD Model SBF Well	Annual Pollutant Reductions (lbs.) per DWD Model SBF Well [BPT Load-Option Load]	Annual Pollutant Reductions (lbs.) per DWD Model OBF Well [BPT Load-Option Load]
Non-Conventional Pollutants			
Aluminum	200.8139	444.6565	(200.8139)
Barium	13018.7269	28,827.0009	(13,018.7269)
Iron	339.7334	752.2622	(339.7334)
Tin	0.3233	0.7158	(0.3233)
Titanium	1.9373	4.2897	(1.9373)
Alkylated benzenes	0.9362	2.0738	(0.9362)
Alkylated naphthalenes	8.8010	19.4959	(8.8010)
Alkylated fluorenes	1.0594	2.3468	(1.0594)
Alkylated phenanthrenes	1.3385	2.9651	(1.3385)
Alkylated phenols	0.0052	0.0114	(0.0052)
Total biphenyls	1.7397	3.8538	(1.7397)
Total dibenzothiophenes	0.0741	0.1642	(0.0741)
Total Non-Conventional Pollutants	13575.5	30,059.8	(13,575.5)
Total Pollutant Loadings *	825,756.2	168,805.1	(825,756.2)

* Sum Total of Conventional, Priority, and Non-Conventional Pollutants

Zero Discharge Option **Model Well:** **DWD**
Existing Sources

Technology = Zero Discharge of All Cuttings Wastes (assuming 10.20% (wt) retention on zero discharged cuttings)

Dry Cuttings Generated per Well (lbs) = 778,050
Whole Drilling Fluid Discharged per Well (bbl) = 533.4

Pollutant Name	Annual Pollutant Loadings (lbs.) per DWD Model SBF Well	Annual Pollutant Reductions (lbs.) per DWD Model SBF Well [BPT Load-Option Load]	Annual Pollutant Reductions (lbs.) per DWD Model OBF Well [BPT Load-Option Load]
Conventional Pollutants			
Total Oil as SBF Basefluid	0	101,357.9	0
Total Oil as Formation Oil	0	313.0	0
Total Oil (SBF Basefluid + Form. Oil)	0	101,670.9	0
TSS (associated with discharged SBF)	0	71,166.2	0
TSS (associated with dry cuttings)	0	778,050.0	0
TSS (total)	0	849,216.2	0
Total Conventional Pollutants (this value used in subsequent eng./nwqi/ea/econ. modeling)	0.0	950,887.1	0.0
Priority Pollutant Organics			
Naphthalene	0	0.5347	0
Fluorene	0	0.2916	0
Phenanthrene	0	0.6917	0
Phenol	0	0.0019	0
Total Organic Priority Pollutants	0.0	1.5199	0.0
Priority Pollutants, Metals			
Cadmium	0	0.0783	0
Mercury	0	0.0071	0
Antimony	0	0.4056	0
Arsenic	0	0.5053	0
Berylium	0	0.0498	0
Chromium	0	17.0799	0
Copper	0	1.3308	0
Lead	0	2.4979	0
Nickel	0	0.9607	0
Selenium	0	0.0783	0
Silver	0	0.0498	0
Thallium	0	0.0854	0
Zinc	0	14.2688	0
Total Metals Priority Pollutants	0.0	37.4	0.0

Zero Discharge Option **Model Well:** **DWD**
Existing Sources

Technology = Zero Discharge of All Cuttings Wastes (assuming 10.20% (wt) retention on zero discharged cuttings)

Pollutant Name	Annual Pollutant Loadings (lbs.) per DWD Model SBF Well	Annual Pollutant Reductions (lbs.) per DWD Model SBF Well [BPT Load-Option Load]	Annual Pollutant Reductions (lbs.) per DWD Model OBF Well [BPT Load-Option Load]
Non-Conventional Pollutants			
Aluminum	0	645.4704	0
Barium	0	41,845.7278	0
Iron	0	1,091.9956	0
Tin	0	1.0390	0
Titanium	0	6.2270	0
Alkylated benzenes	0	3.0099	0
Alkylated naphthalenes	0	28.2970	0
Alkylated fluorenes	0	3.4063	0
Alkylated phenanthrenes	0	4.3036	0
Alkylated phenols	0	0.0166	0
Total biphenyls	0	5.5936	0
Total dibenzothiophenes	0	0.2384	0
Total Non-Conventional Pollutants	0.0	43,635.3	0.0
Total Pollutant Loadings *	0.0	994,561.4	0.0

* Sum Total of Conventional, Priority, and Non-Conventional Pollutants

WORKSHEET No. 2:
Deep Water Exploratory Model Well

BPT Baseline Loadings **Model Well:** **DWE** **Existing Sources**

Technology = Discharge Assuming 10.20% (wt) Retention on Discharged Cuttings and 0.2% (vol.) Crude Contamination

Dry Cuttings Generated per Well (lbs) = 1,729,910

Whole Drilling Fluid Discharged per Well (bbl) = 1186

Pollutant Name	Annual Pollutant Loadings (lbs.) per DWE Model SBF Well	Annual Pollutant Loadings (lbs.) per DWE Model OBF Well
Conventional Pollutants		
Total Oil as SBF Basefluid	225,358.4	0
Total Oil as Formation Oil	695.9	0
Total Oil (SBF Basefluid + Form. Oil)	226,054.3	0
TSS (associated with discharged SBF)	158,230.4	0
TSS (associated with dry cuttings)	1,729,910.0	0
TSS (total)	1,888,140.4	0
Total Conventional Pollutants (this value used in subsequent eng./nwqi/ea/econ. modeling)	**2,114,194.6**	0.0
Priority Pollutant Organics		
Naphthalene	1.1887	0
Fluorene	0.6484	0
Phenanthrene	1.5379	0
Phenol	0.0042	0
Total Organic Priority Pollutants	**3.3792**	0.0
Priority Pollutants, Metals		
Cadmium	0.1741	0
Mercury	0.0158	0
Antimony	0.9019	0
Arsenic	1.1234	0
Berylium	0.1108	0
Chromium	37.9753	0
Copper	2.9589	0
Lead	5.5539	0
Nickel	2.1361	0
Selenium	0.1741	0
Silver	0.1108	0
Thallium	0.1899	0
Zinc	31.7252	0
Total Metals Priority Pollutants	**83.1501**	0.0

BPT Baseline Loadings **Model Well:** **DWE**
Existing Sources

Technology = Discharge Assuming 10.20% (wt) Retention on Discharged Cuttings and 0.2% (vol.) Crude Contamination

Pollutant Name	Annual Pollutant Loadings (lbs.) per DWE Model SBF Well	Annual Pollutant Loadings (lbs.) per DWE Model OBF Well
Non-Conventional Pollutants		
Aluminum	1435.1335	0
Barium	93039.4487	0
Iron	2427.9340	0
Tin	2.3102	0
Titanium	13.8452	0
Alkylated benzenes	6.6919	0
Alkylated naphthalenes	62.9122	0
Alkylated fluorenes	7.5731	0
Alkylated phenanthrenes	9.5682	0
Alkylated phenols	0.0369	0
Total biphenyls	12.4361	0
Total dibenzothiophenes	0.5300	0
Total Non-Conventional Pollutants	**97,018.4**	0.0
Total Pollutant Loadings *	2,211,299.6	0.0

* Sum Total of Conventional, Priority, and Non-Conventional Pollutants

BAT/NSPS Option 1 Loadings **Model Well:** **DWE**

Existing Sources

Technology = Discharge Assuming 4.03% (wt) Retention on Discharged Cuttings and 0.2% (vol.) Crude Contamination

Dry Cuttings Generated per Well (lbs) = 1,729,910

Whole Drilling Fluid Discharged per Well (bbl) = 401.3

Pollutant Name	Annual Pollutant Loadings (lbs.) per DWE Model SBF Well	Annual Pollutant Reductions (lbs.) per DWE Model SBF Well [BPT Load-Option Load]	Annual Pollutant Reductions (lbs.) per DWE Model OBF Well [BPT Load-Option Load]
Conventional Pollutants			
Total Oil as SBF Basefluid	76,253.7	149,104.7	(76,253.7)
Total Oil as Formation Oil	235.5	460.4	(235.5)
Total Oil (SBF Basefluid + Form. Oil)	76,489.2	149,565.1	(76,489.2)
TSS (associated with discharged SBF)	53,539.8	104,690.5	(53,539.8)
TSS (associated with dry cuttings)	1,729,910.0	0.0	(1,729,910.0)
TSS (total)	1,783,449.8	104,690.5	(1,783,449.8)
Total Conventional Pollutants (this value used in subsequent eng./nwqi/ea/econ. modeling)	1,859,939.0	254,255.6	(1,859,939.0)
Priority Pollutant Organics			
Naphthalene	0.4023	0.7865	(0.4023)
Fluorene	0.2194	0.4290	(0.2194)
Phenanthrene	0.5204	1.0175	(0.5204)
Phenol	0.0014	0.0028	(0.0014)
Total Organic Priority Pollutants	1.1435	2.2357	(1.1435)
Priority Pollutants, Metals			
Cadmium	0.0589	0.1152	(0.0589)
Mercury	0.0054	0.0105	(0.0054)
Antimony	0.3052	0.5967	(0.3052)
Arsenic	0.3801	0.7433	(0.3801)
Berylium	0.0375	0.0733	(0.0375)
Chromium	12.8496	25.1257	(12.8496)
Copper	1.0012	1.9577	(1.0012)
Lead	1.8792	3.6746	(1.8792)
Nickel	0.7228	1.4133	(0.7228)
Selenium	0.0589	0.1152	(0.0589)
Silver	0.0375	0.0733	(0.0375)
Thallium	0.0642	0.1256	(0.0642)
Zinc	10.7347	20.9904	(10.7347)
Total Metals Priority Pollutants	28.1352	55.0149	(28.1352)

BAT/NSPS Option 1 Loadings **Model Well:** **DWE**

Existing Sources

Technology = Discharge Assuming 4.03% (wt) Retention on Discharged Cuttings and 0.2% (vol.) Crude Contamination

Pollutant Name	Annual Pollutant Loadings (lbs.) per DWE Model SBF Well	Annual Pollutant Reductions (lbs.) per DWE Model SBF Well [BPT Load-Option Load]	Annual Pollutant Reductions (lbs.) per DWE Model OBF Well [BPT Load-Option Load]
Non-Conventional Pollutants			
Aluminum	485.6011	949.5324	(485.6011)
Barium	31481.4312	61,558.0175	(31,481.4312)
Iron	821.5315	1,606.4025	(821.5315)
Tin	0.7817	1.5285	(0.7817)
Titanium	4.6847	9.1604	(4.6847)
Alkylated benzenes	2.2645	4.4274	(2.2645)
Alkylated naphthalenes	21.2890	41.6232	(21.2890)
Alkylated fluorenes	2.5627	5.0104	(2.5627)
Alkylated phenanthrenes	3.2378	6.3304	(3.2378)
Alkylated phenols	0.0125	0.0244	(0.0125)
Total biphenyls	4.2083	8.2278	(4.2083)
Total dibenzothiophenes	0.1793	0.3506	(0.1793)
Total Non-Conventional Pollutants	32,827.8	64,190.6	(32,827.8)
Total Pollutant Loadings *	1,892,796.1	318,503.5	(1,892,796.1)

* Sum Total of Conventional, Priority, and Non-Conventional Pollutants

BAT/NSPS Option 2 Loadings **Model Well:** **DWE**
Existing Sources

Technology = Discharge Assuming 3.82% (wt) Retention on Discharged Cuttings and 0.2% (vol.) Crude Contamination

Dry Cuttings Generated per Well (lbs) = 1,686,213
Whole Drilling Fluid Discharged per Well (bbl) = 368.9

Pollutant Name	Annual Pollutant Loadings (lbs.) per DWE Model SBF Well	Annual Pollutant Reductions (lbs.) per DWE Model SBF Well [BPT Load-Option Load]	Annual Pollutant Reductions (lbs.) per DWE Model OBF Well [BPT Load-Option Load]
Conventional Pollutants			
Total Oil as SBF Basefluid	70,111.8	155,246.6	(70,111.8)
Total Oil as Formation Oil	216.5	479.4	(216.5)
Total Oil (SBF Basefluid + Form. Oil)	70,328.3	155,726.0	(70,328.3)
TSS (associated with discharged SBF)	49,227.4	109,002.9	(49,227.4)
TSS (associated with dry cuttings)	1,686,213.4	43,696.6	(1,686,213.4)
TSS (total)	1,735,440.8	152,699.6	(1,735,440.8)
Total Conventional Pollutants (this value used in subsequent eng./nwqi/ea/econ. modeling)	1,805,769.1	308,425.5	(1,805,769.1)
Priority Pollutant Organics			
Naphthalene	0.3698	0.8190	(0.3698)
Fluorene	0.2017	0.4467	(0.2017)
Phenanthrene	0.4784	1.0595	(0.4784)
Phenol	0.0013	0.0029	(0.0013)
Total Organic Priority Pollutants	1.0512	2.3280	(1.0512)
Priority Pollutants, Metals			
Cadmium	0.0542	0.1199	(0.0542)
Mercury	0.0049	0.0109	(0.0049)
Antimony	0.2806	0.6213	(0.2806)
Arsenic	0.3495	0.7739	(0.3495)
Berylium	0.0345	0.0763	(0.0345)
Chromium	11.8146	26.1607	(11.8146)
Copper	0.9206	2.0384	(0.9206)
Lead	1.7279	3.8260	(1.7279)
Nickel	0.6646	1.4715	(0.6646)
Selenium	0.0542	0.1199	(0.0542)
Silver	0.0345	0.0763	(0.0345)
Thallium	0.0591	0.1308	(0.0591)
Zinc	9.8701	21.8551	(9.8701)
Total Metals Priority Pollutants	25.8690	57.3	(25.8690)

BAT/NSPS Option 2 Loadings **Model Well:** **DWE**
Existing Sources

Technology = Discharge Assuming 3.82% (wt) Retention on Discharged Cuttings and 0.2% (vol.) Crude Contamination

Pollutant Name	Annual Pollutant Loadings (lbs.) per DWE Model SBF Well	Annual Pollutant Reductions (lbs.) per DWE Model SBF Well [BPT Load-Option Load]	Annual Pollutant Reductions (lbs.) per DWE Model OBF Well [BPT Load-Option Load]
Non-Conventional Pollutants			
Aluminum	446.4879	988.6456	(446.4879)
Barium	28945.7308	64,093.7179	(28,945.7308)
Iron	755.3605	1,672.5735	(755.3605)
Tin	0.7187	1.5914	(0.7187)
Titanium	4.3074	9.5378	(4.3074)
Alkylated benzenes	2.0817	4.6102	(2.0817)
Alkylated naphthalenes	19.5702	43.3420	(19.5702)
Alkylated fluorenes	2.3558	5.2173	(2.3558)
Alkylated phenanthrenes	2.9764	6.5918	(2.9764)
Alkylated phenols	0.0115	0.0254	(0.0115)
Total biphenyls	3.8685	8.5676	(3.8685)
Total dibenzothiophenes	0.1649	0.3651	(0.1649)
Total Non-Conventional Pollutants	30183.6	66,834.8	(30,183.6)
Total Pollutant Loadings *	1,835,979.7	375,319.9	(1,835,979.7)

* Sum Total of Conventional, Priority, and Non-Conventional Pollutants

Zero Discharge Option **Model Well:** **DWE**

Existing Sources

Technology = Zero Discharge of All Cuttings Wastes (assuming 10.20% (wt) retention on zero discharged cuttings)

Dry Cuttings Generated per Well (lbs) = 1,729,910
Whole Drilling Fluid Discharged per Well (bbl) = 1185.9

Pollutant Name	Annual Pollutant Loadings (lbs.) per DWE Model SBF Well	Annual Pollutant Reductions (lbs.) per DWE Model SBF Well [BPT Load-Option Load]	Annual Pollutant Reductions (lbs.) per DWE Model OBF Well [BPT Load-Option Load]
Conventional Pollutants			
Total Oil as SBF Basefluid	0	225,358.4	0
Total Oil as Formation Oil	0	695.9	0
Total Oil (SBF Basefluid + Form. Oil)	0	226,054.3	0
TSS (associated with discharged SBF)	0	158,230.4	0
TSS (associated with dry cuttings)	0	1,729,910.0	0
TSS (total)	0	1,888,140.4	0
Total Conventional Pollutants (this value used in subsequent eng./nwqi/ea/econ. modeling)	0.0	2,114,194.6	0.0
Priority Pollutant Organics			
Naphthalene	0	1.1887	0
Fluorene	0	0.6484	0
Phenanthrene	0	1.5379	0
Phenol	0	0.0042	0
Total Organic Priority Pollutants	0.0	3.3792	0.0
Priority Pollutants, Metals			
Cadmium	0	0.1741	0
Mercury	0	0.0158	0
Antimony	0	0.9019	0
Arsenic	0	1.1234	0
Berylium	0	0.1108	0
Chromium	0	37.9753	0
Copper	0	2.9589	0
Lead	0	5.5539	0
Nickel	0	2.1361	0
Selenium	0	0.1741	0
Silver	0	0.1108	0
Thallium	0	0.1899	0
Zinc	0	31.7252	0
Total Metals Priority Pollutants	0.0	83.2	0.0

Zero Discharge Option **Model Well:** **DWE**

Existing Sources

Technology = Zero Discharge of All Cuttings Wastes (assuming 10.20% (wt) retention on zero discharged cuttings)

Pollutant Name	Annual Pollutant Loadings (lbs.) per DWE Model SBF Well	Annual Pollutant Reductions (lbs.) per DWE Model SBF Well [BPT Load-Option Load]	Annual Pollutant Reductions (lbs.) per DWE Model OBF Well [BPT Load-Option Load]
Non-Conventional Pollutants			
Aluminum	0	1,435.1335	0
Barium	0	93,039.4487	0
Iron	0	2,427.9340	0
Tin	0	2.3102	0
Titanium	0	13.8452	0
Alkylated benzenes	0	6.6919	0
Alkylated naphthalenes	0	62.9122	0
Alkylated fluorenes	0	7.5731	0
Alkylated phenanthrenes	0	9.5682	0
Alkylated phenols	0	0.0369	0
Total biphenyls	0	12.4361	0
Total dibenzothiophenes	0	0.5300	0
Total Non-Conventional Pollutants	0.0	97,018.4	0.0
Total Pollutant Loadings *	0.0	2,211,299.6	0.0

* Sum Total of Conventional, Priority, and Non-Conventional Pollutants

WORKSHEET No. 3:
Shallow Water Development Model Well

BPT Baseline Loadings **Model Well:** **SWD** **Existing Sources**

Technology = Discharge Assuming 10.20% (wt) Retention on Discharged Cuttings and 0.2% (vol.) Crude Contamination

Dry Cuttings Generated per Well (lbs) = 514,150

Whole Drilling Fluid Discharged per Well (bbl) = 353

Pollutant Name	Annual Pollutant Loadings (lbs.) per SWD Model SBF Well	Annual Pollutant Loadings (lbs.) per SWD Model OBF Well
Conventional Pollutants		
Total Oil as SBF Basefluid	66,979.2	0.0
Total Oil as Formation Oil	206.8	0.0
Total Oil (SBF Basefluid + Form. Oil)	67,186.0	0.0
TSS (associated with discharged SBF)	47,028.0	0.0
TSS (associated with dry cuttings)	514,150.0	0.0
TSS (total)	561,178.0	0.0
Total Conventional Pollutants (this value used in subsequent eng./nwqi/ea/econ. modeling)	**628,364.0**	0.0
Priority Pollutant Organics		
Naphthalene	0.3533	0.0
Fluorene	0.1927	0.0
Phenanthrene	0.4571	0.0
Phenol	0.0012	0.0
Total Organic Priority Pollutants	***1.0045***	0.0
Priority Pollutants, Metals		
Cadmium	0.0517	0.0
Mercury	0.0047	0.0
Antimony	0.2681	0.0
Arsenic	0.3339	0.0
Berylium	0.0329	0.0
Chromium	11.2867	0.0
Copper	0.8794	0.0
Lead	1.6507	0.0
Nickel	0.6349	0.0
Selenium	0.0517	0.0
Silver	0.0329	0.0
Thallium	0.0564	0.0
Zinc	9.4291	0.0
Total Metals Priority Pollutants	***24.71***	0.0

BPT Baseline Loadings **Model Well:** **SWD**
Existing Sources

Technology = Discharge Assuming 10.20% (wt) Retention on Discharged Cuttings and 0.2% (vol.) Crude Contamination

Pollutant Name	Annual Pollutant Loadings (lbs.) per SWD Model SBF Well	Annual Pollutant Loadings (lbs.) per SWD Model OBF Well
Non-Conventional Pollutants		
Aluminum	426.5	0.0
Barium	27,652	0.0
Iron	721.6	0.0
Tin	0.6866	0.0
Titanium	4.1149	0.0
Alkylated benzenes	1.9891	0.0
Alkylated naphthalenes	18.7002	0.0
Alkylated fluorenes	2.2510	0.0
Alkylated phenanthrenes	2.8441	0.0
Alkylated phenols	0.0110	0.0
Total biphenyls	3.6965	0.0
Total dibenzothiophenes	0.1575	0.0
Total Non-Conventional Pollutants	***28,835***	0.0
Total Pollutant Loadings *	628,364	0.0

* Sum Total of Conventional, Priority, and Non-Conventional Pollutants

BAT/NSPS Option 1 Loadings **Model Well:** **SWD**
Existing Sources

Technology = Discharge Assuming 4.03% (wt) Retention on Discharged Cuttings and 0.2% (vol.) Crude Contamination

Dry Cuttings Generated per Well (lbs) = 514,150

Whole Drilling Fluid Discharged per Well (bbl) = 119.3

Pollutant Name	Annual Pollutant Loadings (lbs.) per SWD Model SBF Well	Annual Pollutant Reductions (lbs.) per SWD Model SBF Well [BPT Load-Option Load]	Annual Pollutant Reductions (lbs.) per SWD Model OBF Well [BPT Load-Option Load]
Conventional Pollutants			
Total Oil as SBF Basefluid	22,663.5	44,315.7	(22,663.5)
Total Oil as Formation Oil	70.0	136.8	(70.0)
Total Oil (SBF Basefluid + Form. Oil)	22,733.5	44,452.5	(22,733.5)
TSS (associated with discharged SBF)	15,912.7	31,115.3	(15,912.7)
TSS (associated with dry cuttings)	514,150.0	0.0	(514,150.0)
TSS (total)	530,062.7	31,115.3	(530,062.7)
Total Conventional Pollutants (this value used in subsequent eng./nwqi/ea/econ. modeling)	552,796.2	75,567.8	(552,796.2)
Priority Pollutant Organics			
Naphthalene	0.1196	0.2338	(0.1196)
Fluorene	0.0652	0.1275	(0.0652)
Phenanthrene	0.1547	0.3024	(0.1547)
Phenol	0.0004	0.0008	(0.0004)
Total Organic Priority Pollutants	0.3399	0.6645	(0.3399)
Priority Pollutants, Metals			
Cadmium	0.0175	0.0342	(0.0175)
Mercury	0.0016	0.0031	(0.0016)
Antimony	0.0907	0.1774	(0.0907)
Arsenic	0.1130	0.2209	(0.1130)
Berylium	0.0111	0.0218	(0.0111)
Chromium	3.8190	7.4677	(3.8190)
Copper	0.2976	0.5819	(0.2976)
Lead	0.5585	1.0921	(0.5585)
Nickel	0.2148	0.4201	(0.2148)
Selenium	0.0175	0.0342	(0.0175)
Silver	0.0111	0.0218	(0.0111)
Thallium	0.0191	0.0373	(0.0191)
Zinc	3.1905	6.2386	(3.1905)
Total Metals Priority Pollutants	8.3621	16.3511	(8.3621)

BAT/NSPS Option 1 Loadings **Model Well:** **SWD**
Existing Sources

Technology = Discharge Assuming 4.03% (wt) Retention on Discharged Cuttings and 0.2% (vol.) Crude Contamination

Pollutant Name	Annual Pollutant Loadings (lbs.) per SWD Model SBF Well	Annual Pollutant Reductions (lbs.) per SWD Model SBF Well [BPT Load-Option Load]	Annual Pollutant Reductions (lbs.) per SWD Model OBF Well [BPT Load-Option Load]
Non-Conventional Pollutants			
Aluminum	144.3265	282.2124	(144.3265)
Barium	9356.6589	18,295.7811	(9,356.6589)
Iron	244.1690	477.4421	(244.1690)
Tin	0.2323	0.4543	(0.2323)
Titanium	1.3924	2.7226	(1.3924)
Alkylated benzenes	0.6732	1.3159	(0.6732)
Alkylated naphthalenes	6.3289	12.3713	(6.3289)
Alkylated fluorenes	0.7618	1.4892	(0.7618)
Alkylated phenanthrenes	0.9625	1.8815	(0.9625)
Alkylated phenols	0.0037	0.0073	(0.0037)
Total biphenyls	1.2511	2.4455	(1.2511)
Total dibenzothiophenes	0.0533	0.1042	(0.0533)
Total Non-Conventional Pollutants	9,756.8	19,078.2	(9,756.8)
Total Pollutant Loadings *	552,796.2	94,663.1	(562,561.7)

* Sum Total of Conventional, Priority, and Non-Conventional Pollutants

BAT/NSPS Option 2 Loadings **Model Well:** **SWD**
Existing Sources

Technology = Discharge Assuming 3.82% (wt) Retention on Discharged Cuttings and 0.2% (vol.) Crude Contamination

Dry Cuttings Generated per Well (lbs) = 501,163
Whole Drilling Fluid Discharged per Well (bbl) = 109.7

Pollutant Name	Annual Pollutant Loadings (lbs.) per SWD Model SBF Well	Annual Pollutant Reductions (lbs.) per SWD Model SBF Well [BPT Load-Option Load]	Annual Pollutant Reductions (lbs.) per SWD Model OBF Well [BPT Load-Option Load]
Conventional Pollutants			
Total Oil as SBF Basefluid	20,838.1	46,141.1	(20,838.1)
Total Oil as Formation Oil	64.3	142.5	(64.3)
Total Oil (SBF Basefluid + Form. Oil)	20,902.4	46,283.6	(20,902.4)
TSS (associated with discharged SBF)	14,631.0	32,397.0	(14,631.0)
TSS (associated with dry cuttings)	501,162.8	12,987.2	(501,162.8)
TSS (total)	515,793.8	45,384.1	(515,793.8)
Total Conventional Pollutants (this value used in subsequent eng./nwqi/ea/econ. modeling)	536,696.2	91,667.8	(536,696.2)
Priority Pollutant Organics			
Naphthalene	0.1100	0.2434	(0.1100)
Fluorene	0.0600	0.1328	(0.0600)
Phenanthrene	0.1423	0.3149	(0.1423)
Phenol	0.0004	0.0009	(0.0004)
Total Organic Priority Pollutants	0.3126	0.6919	(0.3126)
Priority Pollutants, Metals			
Cadmium	0.0161	0.0356	(0.0161)
Mercury	0.0015	0.0032	(0.0015)
Antimony	0.0834	0.1847	(0.0834)
Arsenic	0.1039	0.2300	(0.1039)
Berylium	0.0102	0.0227	(0.0102)
Chromium	3.5114	7.7753	(3.5114)
Copper	0.2736	0.6058	(0.2736)
Lead	0.5135	1.1371	(0.5135)
Nickel	0.1975	0.4374	(0.1975)
Selenium	0.0161	0.0356	(0.0161)
Silver	0.0102	0.0227	(0.0102)
Thallium	0.0176	0.0389	(0.0176)
Zinc	2.9335	6.4956	(2.9335)
Total Metals Priority Pollutants	7.6886	17.0	(7.6886)

BAT/NSPS Option 2 Loadings **Model Well:** **SWD**
Existing Sources

Technology = Discharge Assuming 3.82% (wt) Retention on Discharged Cuttings and 0.2% (vol.) Crude Contamination

Pollutant Name	Annual Pollutant Loadings (lbs.) per SWD Model SBF Well	Annual Pollutant Reductions (lbs.) per SWD Model SBF Well [BPT Load-Option Load]	Annual Pollutant Reductions (lbs.) per SWD Model OBF Well [BPT Load-Option Load]
Non-Conventional Pollutants			
Aluminum	132.7016	293.8373	(132.7016)
Barium	8603.0184	19,049.4217	(8,603.0184)
Iron	224.5022	497.1089	(224.5022)
Tin	0.2136	0.4730	(0.2136)
Titanium	1.2802	2.8347	(1.2802)
Alkylated benzenes	0.6190	1.3701	(0.6190)
Alkylated naphthalenes	5.8196	12.8806	(5.8196)
Alkylated fluorenes	0.7005	1.5505	(0.7005)
Alkylated phenanthrenes	0.8851	1.9590	(0.8851)
Alkylated phenols	0.0034	0.0076	(0.0034)
Total biphenyls	1.1504	2.5462	(1.1504)
Total dibenzothiophenes	0.0490	0.1085	(0.0490)
Total Non-Conventional Pollutants	8970.9	19,864.1	(8,970.9)
Total Pollutant Loadings *	545,675.2	111,549.6	(545,675.2)

* Sum Total of Conventional, Priority, and Non-Conventional Pollutants

Zero Discharge Option **Model Well:** **SWD**

Existing Sources

Technology = Zero Discharge of All Cuttings Wastes (assuming 10.20% (wt) retention on zero discharged cuttings)

Dry Cuttings Generated per Well (lbs) = 514,150
Whole Drilling Fluid Discharged per Well (bbl) = 352.5

Pollutant Name	Annual Pollutant Loadings (lbs.) per SWD Model SBF Well	Annual Pollutant Reductions (lbs.) per SWD Model SBF Well [BPT Load-Option Load]	Annual Pollutant Reductions (lbs.) per SWD Model OBF Well [BPT Load-Option Load]
Conventional Pollutants			
Total Oil as SBF Basefluid	0	66,979.2	0
Total Oil as Formation Oil	0	206.8	0
Total Oil (SBF Basefluid + Form. Oil)	0	67,186.0	0
TSS (associated with discharged SBF)	0	47,028.0	0
TSS (associated with dry cuttings)	0	514,150.0	0
TSS (total)	0	561,178.0	0
Total Conventional Pollutants (this value used in subsequent eng./nwqi/ea/econ. modeling)	0.0	628,364.0	0.0
Priority Pollutant Organics			
Naphthalene	0	0.3533	0
Fluorene	0	0.1927	0
Phenanthrene	0	0.4571	0
Phenol	0	0.0012	0
Total Organic Priority Pollutants	0.0	1.0045	0.0
Priority Pollutants, Metals			
Cadmium	0	0.0517	0
Mercury	0	0.0047	0
Antimony	0	0.2681	0
Arsenic	0	0.3339	0
Berylium	0	0.0329	0
Chromium	0	11.2867	0
Copper	0	0.8794	0
Lead	0	1.6507	0
Nickel	0	0.6349	0
Selenium	0	0.0517	0
Silver	0	0.0329	0
Thallium	0	0.0564	0
Zinc	0	9.4291	0
Total Metals Priority Pollutants	0.0	24.7	0.0

Zero Discharge Option **Model Well:** **SWD**

Existing Sources

Technology = Zero Discharge of All Cuttings Wastes (assuming 10.20% (wt) retention on zero discharged cuttings)

Pollutant Name	Annual Pollutant Loadings (lbs.) per SWD Model SBF Well	Annual Pollutant Reductions (lbs.) per SWD Model SBF Well [BPT Load-Option Load]	Annual Pollutant Reductions (lbs.) per SWD Model OBF Well [BPT Load-Option Load]
Non-Conventional Pollutants			
Aluminum	0	426.5389	0
Barium	0	27,652.4400	0
Iron	0	721.6111	0
Tin	0	0.6866	0
Titanium	0	4.1149	0
Alkylated benzenes	0	1.9891	0
Alkylated naphthalenes	0	18.7002	0
Alkylated fluorenes	0	2.2510	0
Alkylated phenanthrenes	0	2.8441	0
Alkylated phenols	0	0.0110	0
Total biphenyls	0	3.6965	0
Total dibenzothiophenes	0	0.1575	0
Total Non-Conventional Pollutants	0.0	28,835.0	0.0
Total Pollutant Loadings *	0.0	657,224.8	0.0

* Sum Total of Conventional, Priority, and Non-Conventional Pollutants

WORKSHEET No. 4:
Shallow Water Exploratory Model Well

BPT Baseline Loadings **Model Well:** **SWE** **Existing Sources**

Technology = Discharge Assuming 10.20% (wt) Retention on Discharged Cuttings and 0.2% (vol.) Crude Contamination

Dry Cuttings Generated per Well (lbs) = 1,077,440

Whole Drilling Fluid Discharged per Well (bbl) = 739

Pollutant Name	Annual Pollutant Loadings (lbs.) per SWE Model SBF Well	Annual Pollutant Loadings (lbs.) per SWE Model OBF Well
Conventional Pollutants		
Total Oil as SBF Basefluid	140,360.0	0
Total Oil as Formation Oil	433.4	0
Total Oil (SBF Basefluid + Form. Oil)	140,793.4	0
TSS (associated with discharged SBF)	98,550.6	0
TSS (associated with dry cuttings)	1,077,440.0	0
TSS (total)	1,175,990.6	0
Total Conventional Pollutants (this value used in subsequent eng./nwqi/ea/econ. modeling)	**1,316,784.0**	0.0
Priority Pollutant Organics		
Naphthalene	0.7404	0
Fluorene	0.4038	0
Phenanthrene	0.9578	0
Phenol	0.0026	0
Total Organic Priority Pollutants	**2.1046**	0.0
Priority Pollutants, Metals		
Cadmium	0.1084	0
Mercury	0.0099	0
Antimony	0.5617	0
Arsenic	0.6997	0
Berylium	0.0690	0
Chromium	23.6522	0
Copper	1.8429	0
Lead	3.4591	0
Nickel	1.3304	0
Selenium	0.1084	0
Silver	0.0690	0
Thallium	0.1183	0
Zinc	19.7594	0
Total Metals Priority Pollutants	**51.7884**	0.0

BPT Baseline Loadings **Model Well:** **SWE**
Existing Sources

Technology = Discharge Assuming 10.20% (wt) Retention on Discharged Cuttings and 0.2% (vol.) Crude Contamination

Pollutant Name	Annual Pollutant Loadings (lbs.) per SWE Model SBF Well	Annual Pollutant Loadings (lbs.) per SWE Model OBF Well
Non-Conventional Pollutants		
Aluminum	893.8443	0
Barium	57947.7681	0
Iron	1512.1904	0
Tin	1.4388	0
Titanium	8.6232	0
Alkylated benzenes	4.1678	0
Alkylated naphthalenes	39.1829	0
Alkylated fluorenes	4.7166	0
Alkylated phenanthrenes	5.9592	0
Alkylated phenols	0.0230	0
Total biphenyls	7.7454	0
Total dibenzothiophenes	0.3301	0
Total Non-Conventional Pollutants	**60,426.0**	0.0
Total Pollutant Loadings *	1,377,263.9	0.0

* Sum Total of Conventional, Priority, and Non-Conventional Pollutants

BAT/NSPS Option 1 Loadings **Model Well:** **SWE**
Existing Sources

Technology = Discharge Assuming 4.03% (wt) Retention on Discharged Cuttings and 0.2% (vol.) Crude Contamination

Dry Cuttings Generated per Well (lbs) = 1,077,440

Whole Drilling Fluid Discharged per Well (bbl) = 249.9

Pollutant Name	Annual Pollutant Loadings (lbs.) per SWE Model SBF Well	Annual Pollutant Reductions (lbs.) per SWE Model SBF Well [BPT Load-Option Load]	Annual Pollutant Reductions (lbs.) per SWE Model OBF Well [BPT Load-Option Load]
Conventional Pollutants			
Total Oil as SBF Basefluid	47,493.1	92,866.9	(47,493.1)
Total Oil as Formation Oil	146.7	286.8	(146.7)
Total Oil (SBF Basefluid + Form. Oil)	47,639.8	93,153.6	(47,639.8)
TSS (associated with discharged SBF)	33,346.2	65,204.4	(33,346.2)
TSS (associated with dry cuttings)	1,077,440.0	0.0	(1,077,440.0)
TSS (total)	1,110,786.2	65,204.4	(1,110,786.2)
Total Conventional Pollutants (this value used in subsequent eng./nwqi/ea/econ. modeling)	1,158,426.0	158,358.0	(1,158,426.0)
Priority Pollutant Organics			
Naphthalene	0.2505	0.4899	(0.2505)
Fluorene	0.1366	0.2672	(0.1366)
Phenanthrene	0.3241	0.6338	(0.3241)
Phenol	0.0009	0.0017	(0.0009)
Total Organic Priority Pollutants	0.7121	1.3926	(0.7121)
Priority Pollutants, Metals			
Cadmium	0.0367	0.0717	(0.0367)
Mercury	0.0033	0.0065	(0.0033)
Antimony	0.1901	0.3717	(0.1901)
Arsenic	0.2368	0.4630	(0.2368)
Berylium	0.0233	0.0456	(0.0233)
Chromium	8.0031	15.6491	(8.0031)
Copper	0.6236	1.2193	(0.6236)
Lead	1.1705	2.2887	(1.1705)
Nickel	0.4502	0.8803	(0.4502)
Selenium	0.0367	0.0717	(0.0367)
Silver	0.0233	0.0456	(0.0233)
Thallium	0.0400	0.0782	(0.0400)
Zinc	6.6859	13.0735	(6.6859)
Total Metals Priority Pollutants	17.5234	34.2649	(17.5234)

BAT/NSPS Option 1 Loadings **Model Well:** **SWE**
Existing Sources

Technology = Discharge Assuming 4.03% (wt) Retention on Discharged Cuttings and 0.2% (vol.) Crude Contamination

Pollutant Name	Annual Pollutant Loadings (lbs.) per SWE Model SBF Well	Annual Pollutant Reductions (lbs.) per SWE Model SBF Well [BPT Load-Option Load]	Annual Pollutant Reductions (lbs.) per SWE Model OBF Well [BPT Load-Option Load]
Non-Conventional Pollutants			
Aluminum	302.4470	591.3974	(302.4470)
Barium	19607.5826	38,340.1855	(19,607.5826)
Iron	511.6745	1,000.5158	(511.6745)
Tin	0.4869	0.9520	(0.4869)
Titanium	2.9178	5.7054	(2.9178)
Alkylated benzenes	1.4102	2.7577	(1.4102)
Alkylated naphthalenes	13.2572	25.9256	(13.2572)
Alkylated fluorenes	1.5958	3.1208	(1.5958)
Alkylated phenanthrenes	2.0163	3.9430	(2.0163)
Alkylated phenols	0.0078	0.0152	(0.0078)
Total biphenyls	2.6206	5.1248	(2.6206)
Total dibenzothiophenes	0.1117	0.2184	(0.1117)
Total Non-Conventional Pollutants	20,446.1	39,979.9	(20,446.1)
Total Pollutant Loadings *	1,178,890.4	198,373.6	(1,178,890.4)

* Sum Total of Conventional, Priority, and Non-Conventional Pollutants

BAT/NSPS Option 2 Loadings **Model Well:** **SWE**
Existing Sources

Technology = Discharge Assuming 3.82% (wt) Retention on Discharged Cuttings and 0.2% (vol.) Crude Contamination

Dry Cuttings Generated per Well (lbs) = 1,050,224
Whole Drilling Fluid Discharged per Well (bbl) = 229.8

Pollutant Name	Annual Pollutant Loadings (lbs.) per SWE Model SBF Well	Annual Pollutant Reductions (lbs.) per SWE Model SBF Well [BPT Load-Option Load]	Annual Pollutant Reductions (lbs.) per SWE Model OBF Well [BPT Load-Option Load]
Conventional Pollutants			
Total Oil as SBF Basefluid	43,667.7	96,692.2	(43,667.7)
Total Oil as Formation Oil	134.8	298.6	(134.8)
Total Oil (SBF Basefluid + Form. Oil)	43,802.6	96,990.8	(43,802.6)
TSS (associated with discharged SBF)	30,660.3	67,890.3	(30,660.3)
TSS (associated with dry cuttings)	1,050,224.4	27,215.6	(1,050,224.4)
TSS (total)	1,080,884.7	95,105.9	(1,080,884.7)
Total Conventional Pollutants (this value used in subsequent eng./nwqi/ea/econ. modeling)	1,124,687.3	192,096.7	(1,124,687.3)
Priority Pollutant Organics			
Naphthalene	0.2304	0.5100	(0.2304)
Fluorene	0.1256	0.2782	(0.1256)
Phenanthrene	0.2980	0.6598	(0.2980)
Phenol	0.0008	0.0018	(0.0008)
Total Organic Priority Pollutants	0.6548	1.4498	(0.6548)
Priority Pollutants, Metals			
Cadmium	0.0337	0.0747	(0.0337)
Mercury	0.0031	0.0068	(0.0031)
Antimony	0.1748	0.3870	(0.1748)
Arsenic	0.2177	0.4820	(0.2177)
Berylium	0.0215	0.0475	(0.0215)
Chromium	7.3585	16.2937	(7.3585)
Copper	0.5733	1.2695	(0.5733)
Lead	1.0762	2.3829	(1.0762)
Nickel	0.4139	0.9165	(0.4139)
Selenium	0.0337	0.0747	(0.0337)
Silver	0.0215	0.0475	(0.0215)
Thallium	0.0368	0.0815	(0.0368)
Zinc	6.1474	13.6120	(6.1474)
Total Metals Priority Pollutants	16.1120	35.7	(16.1120)

BAT/NSPS Option 2 Loadings **Model Well:** **SWE**
Existing Sources

Technology = Discharge Assuming 3.82% (wt) Retention on Discharged Cuttings and 0.2% (vol.) Crude Contamination

Pollutant Name	Annual Pollutant Loadings (lbs.) per SWE Model SBF Well	Annual Pollutant Reductions (lbs.) per SWE Model SBF Well [BPT Load-Option Load]	Annual Pollutant Reductions (lbs.) per SWE Model OBF Well [BPT Load-Option Load]
Non-Conventional Pollutants			
Aluminum	278.0861	615.7582	(278.0861)
Barium	18028.2721	39,919.4960	(18,028.2721)
Iron	470.4613	1,041.7291	(470.4613)
Tin	0.4476	0.9912	(0.4476)
Titanium	2.6828	5.9404	(2.6828)
Alkylated benzenes	1.2967	2.8711	(1.2967)
Alkylated naphthalenes	12.1909	26.9919	(12.1909)
Alkylated fluorenes	1.4675	3.2492	(1.4675)
Alkylated phenanthrenes	1.8541	4.1051	(1.8541)
Alkylated phenols	0.0071	0.0158	(0.0071)
Total biphenyls	2.4098	5.3356	(2.4098)
Total dibenzothiophenes	0.1027	0.2274	(0.1027)
Total Non-Conventional Pollutants	18799.3	41,626.7	(18,799.3)
Total Pollutant Loadings *	1,143,503.4	233,760.5	(1,143,503.4)

* Sum Total of Conventional, Priority, and Non-Conventional Pollutants

Zero Discharge Option **Model Well:** **SWE**
Existing Sources

Technology = Zero Discharge of All Cuttings Wastes (assuming 10.20% (wt) retention on zero discharged cuttings)

Dry Cuttings Generated per Well (lbs) = 1,077,440
Whole Drilling Fluid Discharged per Well (bbl) = 738.6

Pollutant Name	Annual Pollutant Loadings (lbs.) per SWE Model SBF Well	Annual Pollutant Reductions (lbs.) per SWE Model SBF Well [BPT Load-Option Load]	Annual Pollutant Reductions (lbs.) per SWE Model OBF Well [BPT Load-Option Load]
Conventional Pollutants			
Total Oil as SBF Basefluid	0	140,360.0	0
Total Oil as Formation Oil	0	433.4	0
Total Oil (SBF Basefluid + Form. Oil)	0	140,793.4	0
TSS (associated with discharged SBF)	0	98,550.6	0
TSS (associated with dry cuttings)	0	1,077,440.0	0
TSS (total)	0	1,175,990.6	0
Total Conventional Pollutants (this value used in subsequent eng./nwqi/ea/econ. modeling)	0.0	1,316,784.0	0.0
Priority Pollutant Organics			
Naphthalene	0	0.7404	0
Fluorene	0	0.4038	0
Phenanthrene	0	0.9578	0
Phenol	0	0.0026	0
Total Organic Priority Pollutants	0.0	2.1046	0.0
Priority Pollutants, Metals			
Cadmium	0	0.1084	0
Mercury	0	0.0099	0
Antimony	0	0.5617	0
Arsenic	0	0.6997	0
Berylium	0	0.0690	0
Chromium	0	23.6522	0
Copper	0	1.8429	0
Lead	0	3.4591	0
Nickel	0	1.3304	0
Selenium	0	0.1084	0
Silver	0	0.0690	0
Thallium	0	0.1183	0
Zinc	0	19.7594	0
Total Metals Priority Pollutants	0.0	51.8	0.0

Zero Discharge Option **Model Well:** **SWE**
Existing Sources

Technology = Zero Discharge of All Cuttings Wastes (assuming 10.20% (wt) retention on zero discharged cuttings)

Pollutant Name	Annual Pollutant Loadings (lbs.) per SWE Model SBF Well	Annual Pollutant Reductions (lbs.) per SWE Model SBF Well [BPT Load-Option Load]	Annual Pollutant Reductions (lbs.) per SWE Model OBF Well [BPT Load-Option Load]
Non-Conventional Pollutants			
Aluminum	0	893.8443	0
Barium	0	57,947.7681	0
Iron	0	1,512.1904	0
Tin	0	1.4388	0
Titanium	0	8.6232	0
Alkylated benzenes	0	4.1678	0
Alkylated naphthalenes	0	39.1829	0
Alkylated fluorenes	0	4.7166	0
Alkylated phenanthrenes	0	5.9592	0
Alkylated phenols	0	0.0230	0
Total biphenyls	0	7.7454	0
Total dibenzothiophenes	0	0.3301	0
Total Non-Conventional Pollutants	0.0	60,426.0	0.0
Total Pollutant Loadings *	0.0	1,377,263.9	0.0

* Sum Total of Conventional, Priority, and Non-Conventional Pollutants

WORKSHEET 5:

Gulf of Mexico: Zero Discharge Summary, Existing Sources

	Baseline: Zero Discharge				
	Shallow Water (<1,000 ft)		Deep Water (>1,000 ft)		
	Development	Exploratory	Development	Exploratory	Total
No. wells, SBF	86	51	16	48	201
Loadings/well (lbs)	628,364	1,316,784	950,887	2,114,195	
Total Loadings, Discharge	54,039,305	67,155,986	15,214,194	101,481,343	237,890,828
Total Loadings, Zero Discharge	0	0	0	0	0
Onsite Injection (20%S: 0%D)	0	0	0	0	0
Onshore Disposal (80%S:100%D)	0	0	0	0	0
No. wells, OBF	42	25	0	0	67
Loadings/well (lbs)	628,364	1,316,784	950,887	2,114,195	
Total Loadings, Zero Discharge	26,391,288	32,919,601	0	0	59,310,889
Onsite Injection (20%S: 0%D)	5,278,258	6,583,920	0	0	11,862,178
Onshore Disposal (80%S:100%D)	21,113,031	26,335,681	0	0	47,448,711
Total Toxic Organics Discharge	86	51	16	48	202
Total Toxic Metals Discharge	2,125	1,260	395	1,186	4,967
Total Toxics Discharge	2,212	1,312	411	1,234	5,169
Total Non-conventionals Discharge	2,479,814	1,470,587	461,361	1,384,082	5,795,843

	BAT 1: Zero Discharge				
	Shallow Water (<1,000 ft)		Deep Water (>1,000 ft)		
	Development	Exploratory	Development	Exploratory	Total
No. wells, SBF	124	74	17	49	264
Loadings/well (lbs)	552,796	1,158,426	836,532	1,859,939	
Total Loadings, Discharge	68,546,728	85,723,524	14,221,049	91,137,013	259,628,314
Total Loadings, Zero Discharge	0	0	0	0	0
Onsite Injection (20%S: 0%D)	0	0	0	0	0
Onshore Disposal (80%S:100%D)	0	0	0	0	0
No. wells, OBF	25	15	0	0	40
Loadings/well (lbs)	628,364	1,316,784	950,887	2,114,195	
Total Loadings, Zero Discharge	15,709,100	19,751,761	0	0	35,460,861
Onsite Injection (20%S: 0%D)	3,141,820	3,950,352	0	0	7,092,172
Onshore Disposal (80%S:100%D)	12,567,280	15,801,409	0	0	28,368,689
Total Toxic Organics Discharge	42	25	6	17	90
Total Toxic Metals Discharge	1,037	619	142	410	2,208
Total Toxics Discharge	1,079	644	148	426	2,297
Total Non-conventionals Discharge	1,209,845	722,004	165,866	478,084	2,575,799

(Gulf of Mexico)	BAT 2: Onshore Disposal				
	Shallow Water (<1,000 ft)		Deep Water (>1,000 ft)		
	Development	Exploratory	Development	Exploratory	Total
No. wells, SBF	124	74	17	49	264
Loadings/well (lbs)	16,100	33,739	24,364	54,170	
Total Loadings, Zero Discharge	1,996,395	2,496,661	414,182	2,654,327	7,561,565
Total Loadings, Discharge	66,550,333	83,226,863	13,806,867	88,482,686	252,066,749
Onsite Injection (0%S: 0%D)	0	0	0	0	0
Onshore Disposal (100%S:100%D)	1,996,395	2,496,661	414,182	2,654,327	7,561,565
No. wells, OBF	25	15	0	0	40
Loadings/well (lbs)	628,364	1,316,784	950,887	2,114,195	
Total Loadings, Zero Discharge	15,709,100	19,751,761	0	0	35,460,861
Onsite Injection (20%S: 0%D)	3,141,820	3,950,352	0	0	7,092,172
Onshore Disposal (80%S:100%D)	12,567,280	15,801,409	0	0	28,368,689
Total Toxic Organics Discharge	38.76	23	5	15	83
Total Toxic Metals Discharge	953	569	131	377	2,030
Total Toxics Discharge	992	592	136	392	2,112
Total Non-conventionals Discharge	1,112,397	663,850	152,506	439,576	2,368,329

	BAT 3: Onshore Disposal				
	Shallow Water (<1,000 ft)		Deep Water (>1,000 ft)		
	Development	Exploratory	Development	Exploratory	Total
No. wells, SBF	0	0	3	8	11
Loadings/well (lbs)	628,364	1,316,784	950,887	2,114,195	
Total Loadings, Discharge	0	0	0	0	0
Total Loadings, Zero Discharge			2,852,661	16,913,557	19,766,219
Onsite Injection (20%S: 0%D)	0	0	0	0	0
Onshore Disposal (80%S:100%D)	0	0	2,852,661	16,913,557	19,766,219
No. wells, OBF	128	76	8	25	237
Loadings/well (lbs)	628,364	1,316,784	950,887	2,114,195	
Total Loadings, Zero Discharge	80,430,593	100,075,587	7,607,097	52,854,866	240,968,143
Onsite Injection (20%S: 0%D)	16,086,119	20,015,117	0	0	36,101,236
Onshore Disposal (80%S:100%D)	64,344,474	80,060,470	7,607,097	52,854,866	204,866,907
Total SBF+OBF Zero Discharge Loadings:					
Total Zero Disharge Injection Loadings	16,086,119	20,015,117	0	0	36,101,236
Total Zero Discharge Onshore Loadings	64,344,474	80,060,470	10,459,758	69,768,423	224,633,126

WORKSHEET 6:

California : Zero Discharge Summary, Existing Sources

	Baseline: Zero Discharge				
	Shallow Water (<1,000 ft)		Deep Water (>1,000 ft)		
	Development	Exploratory	Development	Exploratory	Total
No. wells, SBF	0	0	0	0	0
Loadings/well (lbs)	628,364	1,316,784	950,887	2,114,195	
Total Loadings, Discharge	0	0	0	0	0
Total Loadings, Zero Discharge	0	0	0	0	0
Onsite Injection (80%; 0%DWE)	0	0	0	0	0
Onshore Disposal (20%; 100%DWE)	0	0	0	0	0
No. wells, OBF	1	1	0	0	2
Loadings/well (lbs)	628,364	1,316,784	950,887	2,114,195	
Total Loadings, Zero Discharge	628,364	1,316,784	0	0	1,945,148
Onsite Injection (80%; 0%DWE)	628,364	1,316,784	0	0	1,945,148
Onshore Disposal (20%; 100%DWE)	0	0	0	0	0
Total Toxic Organics Discharge	0	0	0	0	0
Total Toxic Metals Discharge	0	0	0	0	0
Total Toxics Discharge	0	0	0	0	0
Total Non-conventionals Discharge	0	0	0	0	0

	BAT 1: Zero Discharge				
	Shallow Water (<1,000 ft)		Deep Water (>1,000 ft)		
	Development	Exploratory	Development	Exploratory	Total
No. wells, SBF	0	0	0	0	0
Loadings/well (lbs)	552,796	1,158,426	836,532	1,859,939	
Total Loadings, Discharge	0	0	0	0	0
Total Loadings, Zero Discharge	0	0	0	0	0
Onsite Injection (80%; 0%DWE)	0	0	0	0	0
Onshore Disposal (20%; 100%DWE)	0	0	0	0	0
No. wells, OBF	1	1	0	0	2
Loadings/well (lbs)	628,364	1,316,784	950,887	2,114,195	
Total Loadings, Zero Discharge	628,364	1,316,784	0	0	1,945,148
Onsite Injection (80%; 0%DWE)	628,364	1,316,784	0	0	1,945,148
Onshore Disposal (20%; 100%DWE)	0	0	0	0	0
Total Toxic Organics Discharge	0	0	0	0	0
Total Toxic Metals Discharge	0	0	0	0	0
Total Toxics Discharge	0	0	0	0	0
Total Non-conventionals Discharge	0	0	0	0	0

California

	BAT 2: Onshore Disposal				
	Shallow Water (<1,000 ft)		Deep Water (>1,000 ft)		
	Development	Exploratory	Development	Exploratory	Total
No. wells, SBF	0	0	0	0	0
Loadings/well (lbs)	16,100	33,739	24,364	54,170	
Total Loadings, Zero Discharge	0	0	0	0	0
Total Loadings, Discharge	0	0	0	0	0
Onsite Injection (80%; 0%DWE)	0	0	0	0	0
Onshore Disposal (20%; 100%DWE)	0	0	0	0	0
No. wells, OBF	1	1	0	0	2
Loadings/well (lbs)	628,364	1,316,784	950,887	2,114,195	
Total Loadings, Zero Discharge	628,364	1,316,784	0	0	1,945,148
Onsite Injection (80%; 0%DWE)	628,364	1,316,784	0	0	1,945,148
Onshore Disposal (20%; 100%DWE)	0	0	0	0	0
Total Toxic Organics Discharge	0.00	0	0	0	0
Total Toxic Metals Discharge	0	0	0	0	0
Total Toxics Discharge	0	0	0	0	0
Total Non-conventionals Discharge	0	0	0	0	0

	BAT 3: Onshore Disposal				
	Shallow Water (<1,000 ft)		Deep Water (>1,000 ft)		
	Development	Exploratory	Development	Exploratory	Total
No. wells, SBF	0	0	0	0	0
Loadings/well (lbs)	628,364	1,316,784	950,887	2,114,195	
Total Loadings, Discharge	0	0	0	0	0
Total Loadings, Zero Discharge	0	0	0	0	0
Onsite Injection (80%; 0%DWE)	0	0	0	0	0
Onshore Disposal (20%; 100%DWE)	0	0	0	0	0
No. wells, OBF	1	1	0	0	2
Loadings/well (lbs)	628,364	1,316,784	950,887	2,114,195	
Total Loadings, Zero Discharge	628,364	1,316,784	0	0	1,945,148
Onsite Injection (80%; 0%DWE)	628,364	1,316,784	0	0	1,945,148
Onshore Disposal (20%; 100%DWE)	0	0	0	0	0
Total SBF+OBF Zero Discharge Loadings:					
Total Zero Disharge Injection Loadings	628,364	1,316,784	0	0	1,945,148
Total Zero Discharge Onshore Loadings	0	0	0	0	0

WORKSHEET 7:

Alaska : Zero Discharge Summary, Existing Sources

	Baseline: Zero Discharge Loadings				
	Shallow Water (<1,000 ft)		Deep Water (>1,000 ft)		
	Development	Exploratory	Development	Exploratory	Total
No. wells, SBF	0	0	0	0	0
Loadings/well (lbs)	628,364	1,316,784	950,887	2,114,195	
Total Loadings, Discharge	0	0	0	0	0
Total Loadings, Zero Discharge	0	0	0	0	0
Onsite Injection (100%)	0	0	0	0	0
Onshore Disposal (0%)	0	0	0	0	0
No. wells, OBF	1	1	0	0	2
Loadings/well (lbs)	628,364	1,316,784	950,887	2,114,195	
Total Loadings, Zero Discharge	628,364	1,316,784	0	0	1,945,148
Onsite Injection (100%)	628,364	1,316,784	0	0	1,945,148
Onshore Disposal (0%)	0	0	0	0	0
Total Toxic Organics Discharge	0	0	0	0	0
Total Toxic Metals Discharge	0	0	0	0	0
Total Toxics Discharge	0	0	0	0	0
Total Non-conventionals Discharge	0	0	0	0	0

	BAT 1: Zero Discharge Loadings				
	Shallow Water (<1,000 ft)		Deep Water (>1,000 ft)		
	Development	Exploratory	Development	Exploratory	Total
No. wells, SBF	1	0	0	0	1
Loadings/well (lbs)	552,796	1,158,426	836,532	1,859,939	
Total Loadings, Discharge	552,796	0	0	0	552,796
Total Loadings, Zero Discharge	0	0	0	0	
Onsite Injection (100%)	0	0	0	0	0
Onshore Disposal (0%)	0	0	0	0	0
No. wells, OBF	0	1	0	0	1
Loadings/well (lbs)	628,364	1,316,784	950,887	2,114,195	
Total Loadings, Zero Discharge	0	1,316,784	0	0	1,316,784
Onsite Injection (100%)	0	1,316,784	0	0	1,316,784
Onshore Disposal (0%)	0	0	0	0	0
Total Toxic Organics Discharge	0	0	0	0	0
Total Toxic Metals Discharge	8	0	0	0	8
Total Toxics Discharge	9	0	0	0	9
Total Non-conventionals Discharge	9,757	0	0	0	9,757

Alaska

Onshore Disposal

	BAT 2: Onshore Disposal				
	Shallow Water (<1,000 ft)		Deep Water (>1,000 ft)		
	Development	Exploratory	Development	Exploratory	Total
No. wells, SBF	1	0	0	0	1
Loadings/well (lbs)	16,100	33,739	24,364	54,170	
Total Loadings, Zero Discharge	16,100	0	0	0	16,100
Total Loadings, Discharge	536,696	0	0	0	536,696
Onsite Injection (100%)	16,100	0	0	0	16,100
Onshore Disposal (0%)	0	0	0	0	0
No. wells, OBF	0	1	0	0	1
Loadings/well (lbs)	628,364	1,316,784	950,887	2,114,195	
Total Loadings, Zero Discharge	0	1,316,784	0	0	1,316,784
Onsite Injection (100%)	0	1,316,784	0	0	1,316,784
Onshore Disposal (0%)	0	0	0	0	0
Total Toxic Organics Discharge	0.31	0	0	0	0
Total Toxic Metals Discharge	8	0	0	0	8
Total Toxics Discharge	8	0	0	0	8
Total Non-conventionals Discharge	8,971	0	0	0	8,971

	BAT 3: Onshore Disposal				
	Shallow Water (<1,000 ft)		Deep Water (>1,000 ft)		
	Development	Exploratory	Development	Exploratory	Total
No. wells, SBF	0	0	0	0	0
Loadings/well (lbs)	628,364	1,316,784	950,887	2,114,195	
Total Loadings, Discharge	0	0	0	0	0
Total Loadings, Zero Discharge	0	0	0	0	0
Onsite Injection (100%)	0	0	0	0	0
Onshore Disposal (0%)	0	0	0	0	0
No. wells, OBF	1	1	0	0	2
Loadings/well (lbs)	628,364	1,316,784	950,887	2,114,195	
Total Loadings, Zero Discharge	628,364	1,316,784	0	0	1,945,148
Onsite Injection (100%)	628,364	1,316,784	0	0	1,945,148
Onshore Disposal (0%)	0	0	0	0	0
Total SBF+OBF Zero Discharge Loadings:					
Total Zero Disharge Injection Loadings	628,364	1,316,784	0	0	1,945,148
Total Zero Discharge Onshore Loadings	0	0	0	0	0

WORKSHEET 8:

Gulf of Mexico: Zero Discharge Summary, New Sources

Baseline: Zero Discharge Loadings

	Shallow Water (<1,000 ft)		Deep Water (>1,000 ft)		
	Development	Exploratory	Development	Exploratory	Total
No. wells, SBF	5	0	15	0	20
Loadings/well (lbs)	628,364	1,316,784	950,887	2,114,195	
Total Loadings, Discharge	3,141,820	0	14,263,307	0	17,405,127
Total Wells, Zero Discharge	0	0	0	0	0
Onsite Injection (20%S: 0%D)	0	0	0	0	0
Onshore Disposal (80%S:100%D)	0	0	0	0	0
No. wells, OBF	2	0	0	0	2
Loadings/well (lbs)	628,364	1,316,784	950,887	2,114,195	
Total Loadings, Zero Discharge	1,256,728	0	0	0	1,256,728
Onsite Injection (20%S: 0%D)	0	0	0	0	0
Onshore Disposal (80%S:100%D)	1,256,728	0	0	0	1,256,728
Total Toxic Organics Discharge	5	0	15	0	20
Total Toxic Metals Discharge	124	0	371	0	494
Total Toxics Discharge	129	0	386	0	514
Total Non-conventionals Discharge	144,175	0	432,526	0	576,701

NSPS 1: Zero Discharge

	Shallow Water (<1,000 ft)		Deep Water (>1,000 ft)		
	Development	Exploratory	Development	Exploratory	Total
No. wells, SBF	8	0	16	0	24
Loadings/well (lbs)	552,796	1,158,426	836,532	1,859,939	
Total Loadings, Discharge	4,422,370	0	13,384,517	0	17,806,886
Total Wells, Zero Discharge	0	0	0	0	0
Onsite Injection (20%S:0%D)	0	0	0	0	0
Haul/Onshore Disposal (80%S:100%D)	0	0	0	0	0
No. wells, OBF	1	0	0	0	1
Loadings/well (lbs)	628,364	1,316,784	950,887	2,114,195	
Total Loadings, Zero Discharge	628,364	0	0	0	628,364
Onsite Injection (20%S:0%D)	0	0	0	0	0
Haul/Onshore Disposal (80%S:100%D)	628,364	0	0	0	628,364
Total Toxic Organics Discharge	3	0	5	0	8
Total Toxic Metals Discharge	67	0	134	0	201
Total Toxics Discharge	70	0	139	0	209
Total Non-conventionals Discharge	78,055	0	156,109	0	234,164

Gulf of Mexico NSPS 2	Shallow Water (<1,000 ft)		Deep Water (>1,000 ft)		
Onshore Disposal	**Development**	**Exploratory**	**Development**	**Exploratory**	**Total**
No. wells, SBF	8	0	16	0	24
Loadings/well (lbs)	16,100	33,739	24,364	54,170	
Total Loadings, Zero Discharge	128,800	0	389,818	0	518,618
Total Loadings, Discharge	4,293,570	0	12,994,698	0	17,288,268
Onsite Injection (0%S: 0%D)	0	0	0	0	0
Onshore Disposal (100%S:100%D)	128,800	0	389,818	0	518,618
No. wells, OBF	1	0	0	0	1
Loadings/well (lbs)	628,364	1,316,784	950,887	2,114,195	
Total Loadings, Zero Discharge	628,364	0	0	0	628,364
Onsite Injection (20%S: 0%D)	0	0	0	0	0
Onshore Disposal (80%S:100%D)	628,364	0	0	0	628,364
Total Toxic Organics Discharge	2.50	0	5	0	8
Total Toxic Metals Discharge	62	0	123	0	185
Total Toxics Discharge	64	0	128	0	192
Total Non-conventionals Discharge	71,768	0	143,535	0	215,303

NSPS 3: Zero Discharge

	Shallow Water (<1,000 ft)		Deep Water (>1,000 ft)		
	Development	**Exploratory**	**Development**	**Exploratory**	**Total**
No. wells, SBF	0	0	3	0	3
Loadings/well (lbs)	628,364	1,316,784	950,887	2,114,195	
Total Loadings, Zero Discharge	0	0	2,852,661	0	2,852,661
Total Loadings Discharge	0	0	0	0	0
Onsite Injection (20%S: 0%D)	0	0	950,887	0	950,887
Onshore Disposal (80%S:100%D)	0	0	1,901,774	0	1,901,774
No. wells, OBF	7	0	8	0	15
Loadings/well (lbs)	628,364	1,316,784	950,887	2,114,195	
Total Loadings, Zero Discharge	4,398,548	0	7,607,097	0	12,005,645
Onsite Injection (20%S: 0%D)	628,364	0	1,901,774	0	2,530,138
Onshore Disposal (80%S:100%D)	3,770,184	0	5,705,323	0	9,475,507

Total SBF+OBF Zero Discharge Loadings:					
Total Zero Disharge Injection Loadings	628,364	0	2,852,661	0	3,481,025
Total Zero Discharge Onshore Loadings	3,770,184	0	7,607,097	0	11,377,281

WORKSHEET 9:

California : Zero Discharge Summary, New Sources

Baseline: Zero Discharge Loadings

	Shallow Water (<1,000 ft)		Deep Water (>1,000 ft)		
	Development	Exploratory	Development	Exploratory	Total
No. wells, SBF	0	0	0	0	0
Loadings/well (lbs)	628,364	1,316,784	950,887	2,114,195	
Total Loadings, Discharge	0	0	0	0	0
Total Loadings, Zero Discharge	0	0	0	0	0
Onsite Injection (80%; 0%DWE)	0	0	0	0	0
Onshore Disposal (20%; 100%DWE)	0	0	0	0	0
No. wells, OBF	0	0	0	0	0
Loadings/well (lbs)	628,364	1,316,784	950,887	2,114,195	
Total Loadings, Zero Discharge	0	0	0	0	0
Onsite Injection (80%; 0%DWE)	0	0	0	0	0
Onshore Disposal (20%; 100%DWE)	0	0	0	0	0
Total Toxic Organics Discharge	0	0	0	0	0
Total Toxic Metals Discharge	0	0	0	0	0
Total Toxics Discharge	0	0	0	0	0
Total Non-conventionals Discharge	0	0	0	0	0

NSPS 1: Zero Discharge

	Shallow Water (<1,000 ft)		Deep Water (>1,000 ft)		
	Development	Exploratory	Development	Exploratory	Total
No. wells, SBF	0	0	0	0	0
Loadings/well (lbs)	552,796	1,158,426	836,532	1,859,939	
Total Loadings, Discharge	0	0	0	0	0
Total Loadings, Zero Discharge	0	0	0	0	
Onsite Injection (80%; 0%DWE)	0	0	0	0	0
Onshore Disposal (20%; 100%DWE)	0	0	0	0	0
No. wells, OBF	0	0	0	0	0
Loadings/well (lbs)	628,364	1,316,784	950,887	2,114,195	
Total Loadings, Zero Discharge	0	0	0	0	0
Onsite Injection (80%; 0%DWE)	0	0	0	0	0
Onshore Disposal (20%; 100%DWE)	0	0	0	0	0
Total Toxic Organics Discharge	0	0	0	0	0
Total Toxic Metals Discharge	0	0	0	0	0
Total Toxics Discharge	0	0	0	0	0
Total Non-conventionals Discharge	0	0	0	0	0

California NSPS 2	Shallow Water (<1,000 ft)		Deep Water (>1,000 ft)		
	Development	Exploratory	Development	Exploratory	Total
No. wells, SBF	0	0	0	0	0
Loadings/well (lbs)	16,100	33,739	24,364	54,170	
Total Loadings, Zero Discharge	0	0	0	0	0
Total Loadings, Discharge	0	0	0	0	0
Onsite Injection (80%; 0%DWE)	0	0	0	0	0
Onshore Disposal (20%; 100%DWE)	0	0	0	0	0
No. wells, OBF	0	0	0	0	0
Loadings/well (lbs)	628,364	1,316,784	950,887	2,114,195	
Total Loadings, Zero Discharge	0	0	0	0	0
Onsite Injection (80%; 0%DWE)	0	0	0	0	0
Onshore Disposal (20%; 100%DWE)	0	0	0	0	0
Total Toxic Organics Discharge	0.00	0	0	0	0
Total Toxic Metals Discharge	0	0	0	0	0
Total Toxics Discharge	0	0	0	0	0
Total Non-conventionals Discharge	0	0	0	0	0

NSPS 3: Zero Discharge

	Shallow Water (<1,000 ft)		Deep Water (>1,000 ft)		
	Development	Exploratory	Development	Exploratory	Total
No. wells, SBF	0	0	0	0	0
Loadings/well (lbs)	628,364	1,316,784	950,887	2,114,195	
Total Loadings, Zero Discharge	0	0	0	0	0
Total Loadings Discharge	0	0	0	0	0
Onsite Injection (80%; 0%DWE)	0	0	0	0	0
Onshore Disposal (20%; 100%DWE)	0	0	0	0	0
No. wells, OBF	0	0	0	0	0
Loadings/well (lbs)	628,364	1,316,784	950,887	2,114,195	
Total Loadings, Zero Discharge	0	0	0	0	0
Onsite Injection (80%; 0%DWE)	0	0	0	0	0
Onshore Disposal (20%; 100%DWE)	0	0	0	0	0

Total SBF+OBF Zero Discharge Loadings:					
Total Zero Disharge Injection Loadings	0	0	0	0	0
Total Zero Discharge Onshore Loadings	0	0	0	0	0

WORKSHEET 10:

Cook Inlet, Alaska : Zero Discharge Summary, New Sources

Baseline: Zero Discharge Loadings

	Shallow Water (<1,000 ft)		Deep Water (>1,000 ft)		
	Development	Exploratory	Development	Exploratory	Total
No. wells, SBF	0	0	0	0	0
Loadings/well (lbs)	628,364	1,316,784	950,887	2,114,195	
Total Loadings, Discharge	0	0	0	0	0
Total Loadings, Zero Discharge	0	0	0	0	0
Onsite Injection (100%)	0	0	0	0	0
Onshore Disposal (0%)	0	0	0	0	0
No. wells, OBF	0	0	0	0	0
Loadings/well (lbs)	628,364	1,316,784	950,887	2,114,195	
Total Loadings, Zero Discharge	0	0	0	0	0
Onsite Injection (100%)	0	0	0	0	0
Onshore Disposal (0%)	0	0	0	0	0
Total Toxic Organics Discharge	0	0	0	0	0
Total Toxic Metals Discharge	0	0	0	0	0
Total Toxics Discharge	0	0	0	0	0
Total Non-conventionals Discharge	0	0	0	0	0

NSPS 1: Zero Discharge

	Shallow Water (<1,000 ft)		Deep Water (>1,000 ft)		
	Development	Exploratory	Development	Exploratory	Total
No. wells, SBF	0	0	0	0	0
Loadings/well (lbs)	552,796	1,158,426	836,532	1,859,939	
Total Loadings, Discharge	0	0	0	0	0
Total Loadings, Zero Discharge					
Onsite Injection (100%)	0	0	0	0	0
Onshore Disposal (0%)	0	0	0	0	0
No. wells, OBF	0	0	0	0	0
Loadings/well (lbs)	628,364	1,316,784	950,887	2,114,195	
Total Loadings, Zero Discharge	0	0	0	0	0
Onsite Injection (100%)	0	0	0	0	0
Onshore Disposal (0%)	0	0	0	0	0
Total Toxic Organics Discharge	0	0	0	0	0
Total Toxic Metals Discharge	0	0	0	0	0
Total Toxics Discharge	0	0	0	0	0
Total Non-conventionals Discharge	0	0	0	0	0

Alaska NSPS 2	Shallow Water (<1,000 ft)		Deep Water (>1,000 ft)		
Onshore Disposal	**Development**	**Exploratory**	**Development**	**Exploratory**	**Total**
No. wells, SBF	0	0	0	0	0
Loadings/well (lbs)	16,100	33,739	24,364	54,170	
Total Loadings, Zero Discharge	0	0	0	0	0
Total Loadings, Discharge	0	0	0	0	0
Onsite Injection (100%)	0	0	0	0	
Onshore Disposal (0%)	0	0	0	0	0
No. wells, OBF	0	0	0	0	0
Loadings/well (lbs)	628,364	1,316,784	950,887	2,114,195	
Total Loadings, Zero Discharge	0	0	0	0	0
Onsite Injection (100%)	0	0	0	0	0
Onshore Disposal (0%)	0	0	0	0	0
Total Toxic Organics Discharge	0.00	0	0	0	0
Total Toxic Metals Discharge	0	0	0	0	0
Total Toxics Discharge	0	0	0	0	0
Total Non-conventionals Discharge	0	0	0	0	0

NSPS 3: Zero Discharge

	Shallow Water (<1,000 ft)		Deep Water (>1,000 ft)		
	Development	**Exploratory**	**Development**	**Exploratory**	**Total**
No. wells, SBF	0	0	0	0	0
Loadings/well (lbs)	628,364	1,316,784	950,887	2,114,195	
Total Loadings, Zero Discharge	0	0	0	0	0
Total Loadings Discharge	0	0	0	0	0
Onsite Injection (100%)	0	0	0	0	0
Onshore Disposal (0%)	0	0	0	0	0
No. wells, OBF	0	0	0	0	0
Loadings/well (lbs)	628,364	1,316,784	950,887	2,114,195	
Total Loadings, Zero Discharge	0	0	0	0	0
Onsite Injection (100%)	0	0	0	0	0
Onshore Disposal (0%)	0	0	0	0	0

Total SBF+OBF Zero Discharge Loadings:					
Total Zero Disharge Injection Loadings	0	0	0	0	0
Total Zero Discharge Onshore Loadings	0	0	0	0	0

WORKSHEET No. 11:

POLLUTANT LOADINGS FROM WATER-BASED DRILLING FLUID: CONVENTIONAL POLLUTANTS FROM DISCHARGED CUTTINGS, EXISTING SOURCES

POLLUTANTS FROM DISCHARGED CUTTINGS		Shallow Well			Deep Well			Totals
(Conventionals)		GOM	CA	AK	GOM	CA	AK	
(from ODD: Table XI-2, p XI-4)								
well depth, TD		10,559	7,607	10,633	13,037	10,082	12,354	
no. wells , total by region	(from Exh. 2)	857	5	4	857	5	4	866
% WBF (total-OBF) wells discharging	(from Exh. 1)	45.06%	51.25%	36.23%	36.80%	31.54%	44.31%	
no. wells discharging cuttings, by region		386	3	1	315	2	2	709
cuttings discharged , bbl per well		1,475	1,242	1,480	2,458	1,437	2,413	
CUTTINGS TSS ANALYSIS:								
lbs TSS / bbl	(from Exh. 3)	551	551	551	551	551	551	
lbs TSS per well		812,209	683,907	814,962	1,353,498	791,284	1,328,718	
total lbs TSS		**313,512,578**	**2,051,722**	**814,962**	**426,351,776**	**1,582,568**	**2,657,437**	**746,971,042**
Gulf of Mexico								739,864,353
California								3,634,290
Alaska								3,472,399
total volume cuttings, bbl		**569,350**	**3,726**	**1,480**	**774,270**	**2,874**	**4,826**	**1,356,526**
Gulf of Mexico								1,343,620
California								6,600
Alaska								6,306
CUTTINGS OIL ANALYSIS:								
% wells , by type and region	(from Exh. 1)	51.00%	58.00%	41.00%	49.00%	42.00%	59.00%	
total no. wells, by region	(from Exh. 2)	857	5	4	857	5	4	866
no. wells, by type and region		437	3	2	420	2	2	866
% wells using MO spot or lube & discharging	(from Exh. 1)	10.41%	11.83%	8.37%	8.50%	7.28%	10.23%	
no. wells using MO and discharging		45	-	-	36	-	-	81
cuttings discharged per well, bbl		1,475	1,242	1,480	2,458	1,437	2,413	
fraction adherent fluid	(from Exh. 3)	5.0%	5.0%	5.0%	5.0%	5.0%	5.0%	
volume adherent fluid, per well, bbl		74	62	74	123	72	121	
MO, lbs per bbl	(from Exh. 3)	9	9	9	9	9	9	
MO, lbs per well		666	558	666	1,107	648	1,089	
total lbs MO		**29,970**	**-**	**-**	**39,852**	**-**	**-**	**69,822**
Gulf of Mexico								69,822
California								-
Alaska								-
total volume MO, bbl		**3,330**	**-**	**-**	**4,428**	**-**	**-**	**7,758**
Gulf of Mexico								7,758
California								-
Alaska								-
TOTAL CONVENTIONAL POLLUTANTS								
lbs conventional pollutants discharged		**313,542,548**	**2,051,722**	**814,962**	**426,391,628**	**1,582,568**	**2,657,437**	**747,040,864**
Gulf of Mexico								739,934,175
California								3,634,290
Alaska								3,472,399
bbl conventional pollutants discharged		**572,680**	**3,726**	**1,480**	**778,698**	**2,874**	**4,826**	**1,364,284**
Gulf of Mexico								1,351,378
California								6,600
Alaska								6,306

WORKSHEET No. 12:

POLLUTANT LOADINGS FROM WATER-BASED DRILLING FLUID: CONVENTIONAL POLLUTANTS FROM DISCHARGED DRILLING FLUID, EXISTING SOURCES

POLLUTANTS FROM DISCHARGED DRILLING FLUIDS (Conventionals)	Shallow Well			Deep Well			Totals
	GOM	CA	AK	GOM	CA	AK	
(from ODD: Table XI-2, p XI-4)							
well depth, TD (from Exh. 5A)	10,559	7,607	10,633	13,037	10,082	12,354	
no. wells , total (from Exh. 2)	857	5	4	857	5	4	866
no. wells discharging fluids (from Exh. 5A)	386	3	1	315	2	2	709
drilling fluids (bbl) per well	6,938	5,939	6,963	9,752	6,777	9,458	
WB FLUIDS TSS ANALYSIS:							
lbs TSS / bbl (from Exh. 3)	153	153	153	153	153	153	
lbs TSS per well	1,061,514	908,667	1,065,339	1,492,056	1,036,881	1,447,074	
total lbs TSS	**409,744,404**	**2,726,001**	**1,065,339**	**469,997,640**	**2,073,762**	**2,894,148**	**888,501,294**
Gulf of Mexico							879,742,044
California							4,799,763
Alaska							3,959,487
total volume, bbl, WB fluids	**2,678,068**	**17,817**	**6,963**	**3,071,880**	**13,554**	**18,916**	**5,807,198**
Gulf of Mexico							5,749,948
California							31,371
Alaska							25,879
WB FLUIDS OIL ANALYSIS:							
% wells using MO spot or lube, discharging (from Exh. 1)	10.41%	11.83%	8.37%	8.50%	7.28%	10.23%	
no. wells using MO and discharging (from Exh. 5A)	45	-	-	36	-	-	81
WB fluids discharged per well, bbl	6,938	5,939	6,963	9,752	6,777	9,458	
MO, lbs per bbl (from Exh. 3)	9	9	9	9	9	9	9
MO, lbs per well	62,442	53,451	62,667	87,768	60,993	85,122	85,122
total lbs MO	**2,809,890**	**-**	**-**	**3,159,648**	**-**	**-**	**5,969,538**
Gulf of Mexico							5,969,538
California							-
Alaska							-
total volume MO, bbl	**9,421**	**-**	**-**	**10,593**	**-**	**-**	**20,014**
Gulf of Mexico	423,935	-	-	381,363	-	-	805,299
California							-
Alaska							-
TOTAL CONVENTIONAL POLLUTANTS:							
lbs conventional pollutants discharged	**412,554,294**	**2,726,001**	**1,065,339**	**473,157,288**	**2,073,762**	**2,894,148**	**894,470,832**
Gulf of Mexico							885,711,582
California							4,799,763
Alaska							3,959,487
bbl conventional pollutants discharged	**2,687,489**	**17,817**	**6,963**	**3,082,473**	**13,554**	**18,916**	**5,827,212**
Gulf of Mexico							5,769,962
California							31,371
Alaska							25,879

Avg GOM drilling fluid discharged, bbl/day (20-day drilling program)	347	297	348	488	339	473	
Avg adherent fluid (5%) on cuttings discharged GOM, bbl/day	4	3	4	6	4	6	
Total avg per well GOM drilling fluid discharged, bbl/day	351	300	352	494	342	479	2,318
no. wells discharging fluids	386			315			701
Total GOM drilling fluid discharges, bbl/day	135,327			155,530			290,856
GOM-wide wtd avg drilling fluid discharges, bbl/day							415

WORKSHEET No. 13:

POLLUTANT LOADINGS FROM WATER-BASED DRILLING FLUID: TOXIC/NON-CONVENTIONAL POLLUTANTS FROM DISCHARGED DRILLING FLUID, EXISTING SOURCES

POLLUTANTS FROM DISCHARGED DRILLING FLUIDS (Toxics & Non-conventionals)		Shallow Well			Deep Well			Totals
TOXICS		GOM	CA	AK	GOM	CA	AK	
(from ODD: Table XI-2, p XI-4)								
Well Depth, TD	(from Exh. 5A)	10,559	7,607	10,633	13,037	10,082	12,354	
No. wells , total	(from Exh. 2)	857	5	4	857	5	4	866
No. wells discharging cuttings	(from Exh. 5A)	386	3	1	315	2	2	709
Drilling fluidsDischarged (bbl) per well		6,938	5,939	6,963	9,752	6,777	9,458	
WB FLUIDS TOXICS/NON-CONVENTIONALS:								
lbs toxics/non-conventionals/ bbl	(from Exh. 3)	37.7	37.7	37.7	37.7	37.7	37.7	
lbs toxics/non-conventionals per well		261,629	223,957	262,572	367,744	255,558	356,657	
total lbs toxics/non-conventionals		**100,988,785**	**671,871**	**262,572**	**115,839,265**	**511,115**	**713,314**	**218,986,922**
Gulf of Mexico								216,828,049
California								1,182,987
Alaska								975,886
total volume, bbl, WB fluids		**2,678,068**	**17,817**	**6,963**	**3,071,880**	**13,554**	**18,916**	**5,807,198**
Gulf of Mexico								5,749,948
California								31,371
Alaska								25,879
WB FLUIDS MINERAL OIL TOXICS/NON-CONVENTIONALS:								
% wells using MO spot or lube, discharging	(from Exh. 1)	10.41%	11.83%	8.37%	8.50%	7.28%	10.23%	
no. wells using MO and discharging	(from Exh. 5A)	45	-	-	36	-	-	81
WB fluids discharged per well, bbl		6,938	5,939	6,963	9,752	6,777	9,458	
mineral oil toxics, lb / bbl	(from Exh. 3)	0.324	0.324	0.324	0.324	0.324	0.324	
mineral oil toxics, lbs / well		2,247	1,924	2,256	3,159	2,195	3,064	14,845
total lbs mineral oil toxics		**101,134**	**-**	**-**	**113,722**	**-**	**-**	**214,856**
Gulf of Mexico								214,856
California								-
Alaska								-
TOTAL TOXIC/NON-CONVENTIONAL POLLUTANTS:								
lbs conventional pollutants discharged		**101,089,918**	**671,871**	**262,572**	**115,952,987**	**511,115**	**713,314**	**219,201,778**
Gulf of Mexico								217,042,905
California								1,182,987
Alaska								975,886

WORKSHEET No. 14:

POLLUTANT LOADINGS FROM WATER-BASED DRILLING FLUID: CONVENTIONAL POLLUTANTS FROM DISCHARGED CUTTINGS, NEW SOURCES

POLLUTANTS FROM DISCHARGED CUTTINGS		Shallow Well			Deep Well			Totals
(Conventionals)		GOM	CA	AK	GOM	CA	AK	
(from ODD: Table XI-2, p XI-4)								
well depth, TD		10,559	7,607	10,633	13,037	10,082	12,354	
no. wells , total by region	(from Exh. 2)	38	-	-	38	-	-	38
% WBF (total-OBF) wells discharging	(from Exh. 1)	45.06%	51.25%	36.23%	36.80%	31.54%	44.31%	
no. wells discharging cuttings, by region		17	0	0	14	0	0	31
cuttings discharged , bbl per well		1,475	1,242	1,480	2,458	1,437	2,413	
CUTTINGS TSS ANALYSIS:								
lbs TSS / bbl	(from Exh. 3)	551	551	551	551	551	551	
lbs TSS per well		812,209	683,907	814,962	1,353,498	791,284	1,328,718	
total lbs TSS		**13,807,549**	**0**	**0**	**18,948,968**	**0**	**0**	**32,756,517**
Gulf of Mexico								32,756,517
California								-
Alaska								-
total volume cuttings, bbl		25,075	0	0	34,412	0	0	**59,487**
Gulf of Mexico								59,487
California								-
Alaska								-
CUTTINGS OIL ANALYSIS:								
% wells , by type and region	(from Exh. 1)	51.00%	58.00%	41.00%	49.00%	42.00%	59.00%	
total no. wells, by region	(from Exh. 2)	38	-	-	38	-	-	38
no. wells, by type and region		19	0	0	19	0	0	19
% wells using MO spot or lube & discharging	(from Exh. 1)	10.41%	11.83%	8.37%	8.50%	7.28%	10.23%	
no. wells using MO and discharging		**2**	**0**	**0**	**2**	**0**	**0**	**4**
cuttings discharged per well, bbl		1,475	1,242	1,480	2,458	1,437	2,413	
fraction adherent fluid	(from Exh. 3)	5.0%	5.0%	5.0%	5.0%	5.0%	5.0%	
volume adherent fluid, per well, bbl		74	62	74	123	72	121	
MO, lbs per bbl	(from Exh. 3)	9	9	9	9	9	9	
MO, lbs per well		666	558	666	1,107	648	1,089	
total lbs MO		**1,332**	**0**	**0**	**2,214**	**0**	**0**	**3,546**
Gulf of Mexico								3,546
California								-
Alaska								-
total volume MO, bbl		**148**	**0**	**0**	**246**	**0**	**0**	**394**
Gulf of Mexico								394
California								-
Alaska								-
TOTAL CONVENTIONAL POLLUTANTS								
lbs conventional pollutants discharged		**13,808,881**	**0**	**0**	**18,951,182**	**0**	**0**	**32,760,063**
Gulf of Mexico								32,760,063
California								-
Alaska								-
bbl conventional pollutants discharged		**25,223**	**0**	**0**	**34,658**	**0**	**0**	**59,881**
Gulf of Mexico								59,881
California								-
Alaska								-

WORKSHEET No. 15:

POLLUTANT LOADINGS FROM WATER-BASED DRILLING FLUID: CONVENTIONAL POLLUTANTS FROM DISCHARGED DRILLING FLUID, NEW SOURCES

POLLUTANTS FROM DISCHARGED DRILLING FLUIDS (Conventionals)	Shallow Well			Deep Well			Totals
	GOM	CA	AK	GOM	CA	AK	
(from ODD: Table XI-2, p XI-4)							
well depth, TD (from Exh. 5A)	10,559	7,607	10,633	13,037	10,082	12,354	
no. wells , total (from Exh. 2)	38	-	-	38	-	-	38
no. wells discharging fluids (from Exh. 5A)	17	0	0	14	0	0	31
drilling fluids (bbl) per well	6,938	5,939	6,963	9,752	6,777	9,458	
WB FLUIDS TSS ANALYSIS:							
lbs TSS / bbl (from Exh. 3)	153	153	153	153	153	153	
lbs TSS per well	1,061,514	908,667	1,065,339	1,492,056	1,036,881	1,447,074	
total lbs TSS	**18,045,738**	**-**	**-**	**20,888,784**	**-**	**-**	**38,934,522**
Gulf of Mexico							38,934,522
California							-
Alaska							-
total volume, bbl, WB fluids	**117,946**	**-**	**-**	**136,528**	**-**	**-**	**254,474**
Gulf of Mexico							254,474
California							-
Alaska							-
WB FLUIDS OIL ANALYSIS:							
% wells using MO spot or lube, discharging (from Exh. 1)	10.41%	11.83%	8.37%	8.50%	7.28%	10.23%	
no. wells using MO and discharging (from Exh. 5A)	2	-	-	2	-	-	4
WB fluids discharged per well, bbl	6,938	5,939	6,963	9,752	6,777	9,458	
MO, lbs per bbl (from Exh. 3)	9	9	9	9	9	9	9
MO, lbs per well	62,442	53,451	62,667	87,768	60,993	85,122	85,122
total lbs MO	**124,884**	**-**	**-**	**175,536**	**-**	**-**	**300,420**
Gulf of Mexico							300,420
California							-
Alaska							-
total volume MO, bbl	**419**	**-**	**-**	**589**	**-**	**-**	**1,007**
Gulf of Mexico	837	-	-	1,177	-	-	2,014
California							-
Alaska							-
TOTAL CONVENTIONAL POLLUTANTS:							
lbs conventional pollutants discharged	**18,170,622**	**-**	**-**	**21,064,320**	**-**	**-**	**39,234,942**
Gulf of Mexico							39,234,942
California							-
Alaska							-
bbl conventional pollutants discharged	**118,365**	**-**	**-**	**137,117**	**-**	**-**	**255,481**
Gulf of Mexico							255,481
California							-
Alaska							-
Avg GOM drilling fluid discharged, bbl/day (20-day drilling program)	347	297	348	488	339	473	
Avg adherent fluid (5%) on cuttings discharged GOM, bbl/day	-	-	-	-	-	-	
Total avg per well GOM drilling fluid discharged, bbl/day	347	297	348	488	339	473	2,291
no. wells discharging fluids	17			14			31
Total GOM drilling fluid discharges, bbl/day	5,897			6,826			12,724
GOM-wide wtd avg drilling fluid discharges, bbl/day							410

WORKSHEET No. 16:

POLLUTANT LOADINGS FROM WATER-BASED DRILLING FLUID: TOXIC/NON-CONVENTIONAL POLLUTANTS FROM DISCHAREGD DRILLING FLUID, NEW SOURCES

POLLUTANTS FROM DISCHARGED DRILLING FLUIDS (Toxics & Non-conventionals)		Shallow Well			Deep Well			Totals
TOXICS		GOM	CA	AK	GOM	CA	AK	
(from ODD: Table XI-2, p XI-4)								
Well Depth, TD	(from Exh. 5A)	10,559	7,607	10,633	13,037	10,082	12,354	
No. wells , total	(from Exh. 2)	38	-	-	38	-	-	38
No. wells discharging cuttings	(from Exh. 5A)	17	0	0	14	0	0	31
Drilling fluidsDischarged (bbl) per well		6,938	5,939	6,963	9,752	6,777	9,458	
WB FLUIDS TOXICS/NON-CONVENTIONALS:								
lbs toxics/non-conventionals/ bbl	(from Exh. 3)	37.7	37.7	37.7	37.7	37.7	37.7	
lbs toxics/non-conventionals per well		261,629	223,957	262,572	367,744	255,558	356,657	
total lbs toxics/non-conventionals		**4,447,693**	**-**	**-**	**5,148,412**	**-**	**-**	**9,596,104**
Gulf of Mexico								9,596,104
California								-
Alaska								-
total volume, bbl, WB fluids		**117,946**	**-**	**-**	**136,528**	**-**	**-**	**254,474**
Gulf of Mexico								254,474
California								-
Alaska								-
WB FLUIDS MINERAL OIL TOXICS/NON-CONVENTIONALS:								
% wells using MO spot or lube, discharging	(from Exh. 1)	0	0	0	0	0	0	
no. wells using MO and discharging	(from Exh. 5A)	2	-	-	2	-	-	4
WB fluids discharged per well, bbl		6,938	5,939	6,963	9,752	6,777	9,458	
mineral oil toxics, lb / bbl	(from Exh. 3)	0.324	0.324	0.324	0.324	0.324	0.324	
mineral oil toxics, lbs / well		2,247	1,924	2,256	3,159	2,195	3,064	14,845
total lbs mineral oil toxics		**4,495**	**-**	**-**	**6,318**	**-**	**-**	**10,813**
Gulf of Mexico								10,813
California								-
Alaska								-
TOTAL TOXIC/NON-CONVENTIONAL POLLUTANTS:								
lbs conventional pollutants discharged		**4,452,187**	**-**	**-**	**5,154,730**	**-**	**-**	**9,606,917**
Gulf of Mexico								9,606,917
California								-
Alaska								-

APPENDIX VIII-5

Pollutant Loadings (Removals)
Supporting Worksheets

WORKSHEET A:

Input Data for Model Wells -- Base Fluid Retention and Drill Cuttings Volume Calculations, Synthetic-based Fluid Analyses

Densities for SBF Components and Drill Cuttings:

SBF Base fluid (lbs/bbl):	280.0
SBF Barite (lbs/bbl):	1,506.0
SBF Water (lbs/bbl):	350.5
Dry Formation Cuttings (lbs/bbl):	910.0
Formation Oil (as diesel) (lbs/bbl):	294.0

SBF Fraction Data:

Basefluid Fraction of Standard SBF (wt./wt.):	47%
Barite Fraction of Standard SBF (wt./wt.):	33%
Water Fraction of Standard SBF (wt./wt.):	20%

SBF Formulation Density (lbs./gal.):	**9.65**

Model Well Volume Data:

Shallow Water, Exploratory (barrels):	1,184.0
Deep Water, Exploratory (barrels):	1,901.0
Shallow Water, Development (barrels):	565.0
Deep Water, Development (barrels):	855.0

Formation Oil Contamination:	0.20%

Base Fluid Fraction of Wet Cuttings (W/W) for Solids Control Equipment:

Primary Shale Shakers:	9.32%
Secondary Shale Shakers:	13.80%
Cuttings Dryer:	3.82%
Fines Removal Unit:	10.70%

Fraction of Total Wet Cuttings Discharge (V/V) for SolidsControl Equipment

Various BPT and BAT/NSPS Options:

BPT	Primary Shale Shakers:	78.5%
	Secondary Shale Shakers:	18.5%
	Fines Removal Unit:	3.0%
BAT/NSPS Option 1	Cuttings Dryer:	97.0%
	Fines Removal Unit:	3.0%
BAT/NSPS Option 2	Cuttings Dryer:	100.0%

Base Fluid Fraction of Discharged Wet Cuttings (W/W) for BAT/NSPS Options:

BPT:	10.20%
BAT/NSPS Option 1 (Two Discharges):	4.03%
BAT/NSPS Option 2 (One Discharge):	3.82%

Equations Used to Calculate Loadings

Total Cuttings Waste Discharged (lbs) = (DC)/(1-(1/SF)*CRN)
SBF Basefluid Discharged (lbs) = CRN * TW
SBF Water Discharged (lbs) = (WF/SF)*(CRN *TW)
SBF Barite Discharged (lbs) = (BF/SF)*(CRN *TW)

where:

TW = Total Cuttings Waste Discharged (lbs)
DC = Dry Drill Cuttings Discharged (lbs)
CRN = SBF Basefluid Fraction on TW (Cuttings Retention Number) (wt./wt.)
SF = SBF Basefluid Fraction (wt./wt.) in Drilling Fluid Formulation
WF = SBF Water Fraction (wt./wt.) in Drilling Fluid Formulation
BF = SBF Barite Fraction (wt./wt.) in Drilling Fluid Formulation
SBFV = Whole Synthetic Based Fluid Volume

Notes:

* Assume SF + WF + BF = 1
* DC is calculated from model well size
* SBFV is the sum total of SBF basefluid, barite, and water (in bbl) discharged
* Total Cuttings Waste Discharged in BAT/NSPS Option 2 is equivalent to the volume fraction of total cuttings waste discharged from cuttings dryer multiplied against the total cuttings waste calculated in BAT/NSPS Option 1
* Total Cuttings Waste Not Discharged in BAT/NSPS Option 2 is equivalent to the volume fraction of total cuttings waste discharged from the fines removal unit (FRU) multiplied against the total cuttings waste calculated in BAT/NSPS Option 1
* Dry Drill Cuttings Discharged in BAT/NSPS Option 2 is equivalent to the arithmetic difference between the BAT/NSPS Option 2 Total Cuttings Waste Discharged and the BAT/NSPS Option 2 SBF (Basefluid, Barite, Water) Discharged
* Dry Drill Cuttings Not Discharged in BAT/NSPS Option 2 is equivalent to the arithmetic difference between the BAT/NSPS Option 2 Total Cuttings Waste Not Discharged and the BAT/NSPS Option 2 SBF (Basefluid, Barite, Water) Not Discharged

WORKSHEET No. B:

ANALYSIS OF WBF PASS/FAIL PERMIT LIMITS (SHEEN; TOXICITY); FAILS HAULED TO ONSHORE DISPOSAL(a,b,c)

			% Wells/region Shallow/deep % split	No lube /lube % split	No spot /spot % split	Proj'd Tox / Sheen Limit Failure Rate	Proj'd % Wells Fail Permit Lim	Proj'd % Wells Pass Permit Lim	Sum lubes(l) spot(s), or l+s that Pass
Gulf of Mexico									
shallow	(51% GOM wells)	=	51.00%						
shallow, no lube	(51% * 88% all wells)	=		44.88%					
shallow, no lube, no spot	(44.88% * 78% all wells do not use spot)	=			35.01%	1.0%	0.350%	34.66%	
shallow, no lube, + spot	(44.88% * 22% all wells need spot)	=			9.87%	33.0%	3.258%	6.62%	
shallow, + lube	(51% * 12% all wells)	=		6.12%					
shallow, + lube, no spot	(6.12% * 78% all wells do not use spot)	=			4.77%	33.0%	1.575%	3.20%	
shallow, + lube, + spot	(6.12% * 22% all wells need spot)	=			1.35%	56.0%	0.754%	0.59%	10.41%
total % shallow wells							5.940%	45.06%	
deep	(49% GOM wells)	=	49.00%						
deep, OBF (no discharge)	(15% of deep wells)	=	7.35%			100%	7.35%	0.00%	
deep, WBF (discharge)	(85% of deep wells)	=	41.65%						
deep, no lube	(49% * 88% all wells)	=		36.65%					
deep, no lube, no spot	(43.12% * 78% all wells do not use spot)	=			28.59%	1.0%	0.286%	28.30%	
deep, no lube, + spot	(43.12% * 22% all wells need spot)	=			8.06%	33.0%	2.661%	5.40%	
deep, + lube	(49% * 12% all wells)	=		5.00%					
deep, + lube, no spot	(6.12% * 78% all wells do not use spot)	=			3.90%	33.0%	1.286%	2.61%	
deep, + lube, + spot	(6.12% * 22% all wells need spot)	=			1.10%	56.0%	0.616%	0.48%	8.50%
total % deep wells				41.65%	41.65%		12.20%	36.80%	
California									
shallow	(58% CA wells)	=	58.00%						
shallow, no lube	(58% * 88% all wells)	=		51.04%					
shallow, no lube, no spot	(51.04% * 78% all wells do not use spot)	=			39.81%	1.0%	0.398%	39.41%	
shallow, no lube, + spot	(51.04% * 22% all wells need spot)	=			11.23%	33.0%	3.706%	7.52%	
shallow, + lube	(58% * 12% all wells)	=		6.96%					
shallow, + lube, no spot	(6.96% * 78% all wells do not use spot)	=			5.43%	33.0%	1.792%	3.64%	
shallow, + lube, + spot	(6.96% * 22% all wells need spot)	=			1.53%	56.0%	0.857%	0.67%	11.83%
total % shallow wells							6.753%	51.25%	
deep	(42% CA wells)	=	42.00%						
deep, OBF (no discharge)	(15% of deep wells)	=	6.30%			100%	6.30%	0.00%	
deep, WBF (discharge)	(85% of deep wells)	=	35.70%						
deep, no lube	(42% * 88% all wells)	=		31.42%					
deep, no lube, no spot	(36.96% * 78% all wells do not use spot)	=			24.50%	1.0%	0.245%	24.26%	
deep, no lube, + spot	(36.96% * 22% all wells need spot)	=			6.91%	33.0%	2.281%	4.63%	
deep, + lube	(42% * 12% all wells)	=		4.28%					
deep, + lube, no spot	(3.93% * 78% all wells do not use spot)	=			3.34%	33.0%	1.103%	2.24%	
deep, + lube, + spot	(3.93% * 22% all wells need spot)	=			0.94%	56.0%	0.528%	0.41%	7.28%
total % deep wells				35.70%	35.70%		10.46%	31.54%	
Alaska									
shallow	(41% AK wells)	=	41.00%						
shallow, no lube	(41% * 88% all wells)	=		36.08%					
shallow, no lube, no spot	(36.08% * 78% all wells do not use spot)	=			28.14%	1.0%	0.281%	27.86%	
shallow, no lube, + spot	(36.08% * 22% all wells need spot)	=			7.94%	33.0%	2.619%	5.32%	
shallow, + lube	(41% * 12% all wells)	=		4.92%					
shallow, + lube, no spot	(4.92% * 78% all wells do not use spot)	=			3.84%	33.0%	1.266%	2.57%	
shallow, + lube, + spot	(4.92% * 22% all wells need spot)	=			1.08%	56.0%	0.606%	0.48%	8.37%
total % shallow wells							4.773%	36.23%	
deep	(59% AK wells)	=	59.00%						
deep, OBF (no discharge)	(15% of deep wells)	=	8.85%			100%	8.85%	0.00%	
deep, WBF (discharge)	(85% of deep wells)	=	50.15%						
deep, no lube	(59% * 88% all wells)	=		44.13%					
deep, no lube, no spot	(51.92% * 78% all wells do not use spot)	=			34.42%	1.0%	0.344%	34.08%	
deep, no lube, + spot	(51.92% * 22% all wells need spot)	=			9.71%	33.0%	3.204%	6.51%	
deep, + lube	(59% * 12% all wells)	=		6.02%					
deep, + lube, no spot	(7.08% * 78% all wells do not use spot)	=			4.69%	33.0%	1.549%	3.15%	
deep, + lube, + spot	(7.08% * 22% all wells need spot)	=			1.32%	56.0%	0.741%	0.58%	10.23%
total % deep wells				50.15%	50.15%		14.69%	44.31%	

(a) Percentage Distribution of Water-based Drilling Fluid Types, (no oil, +MO lube, +MO spot, or +MO lube & spot)
(b) Cells shaded in blue are data input from ODD: Table XI-10, p XI-17; other percentages shown are derived from these input values)
(c) The terms "shallow" and "deep" as used in the offshore effluent limitaiton guideline do NOT have the same meaning as the same terms as used in the synthetics effluent guideline; these terms in the offshore rule refers to the relative target depth of the well, whereas in the synthetics rule they refer to the water depth in which operations occur.

WORKSHEET No. C: **POLLUTANT LOADINGS FROM WATER-BASED DRILLING FLUID: WELL DEPTHS AND VOLUMES OF DISCHARGED CUTTINGS AND DRILLING FLUIDS**

		GOM	CA	AK	GOM	CA	AK
		Shallow Well			Deep Well		
(from ODD: Table XI-2, p XI-4)	well depth, TD	10,559	7,607	10,633	13,037	10,082	12,354
	cuttings discharged , bbl per well	1,475	1,242	1,480	2,458	1,437	2,413
(from ODD: Table XI-2, p XI-4)	drilling fluids (bbl) per well	6,938	5,939	6,963	9,752	6,777	9,458

Current Well Counts, SBF Effluent Limitations Guideline (see "Well Count Input Sheet," this file)

		EXISTING SOURCES, WBF Wells				NEW SOURCES, WBF Wells				
Est'd % WBF > SBF		GOM	CA	AK	Subtotal	GOM	CA	AK	Subtotal	Total
Baseline	0%	857.0	5	4	866	38	0	0	38	904
BAT 1	6%	803.0	5	4	812	35	0	0	35	847
BAT 2	6%	803.0	5	4	812	35	0	0	35	847

WBF/Water Phase Composition/Contribution to Toxic/Non-conventional Pollutant Loadings, Offshore Record

(from ODD: Table XI-3, p XI-5 and Table XI-6, p XI-9)

Drilling Fuids	Composition, lbs/bbl	Total nonC+toxics+Ba	
barite	98	384,792	mg/kg dry
kg/bbl tox+non-Conv		17.1	kg/bbl
lb/bbl tox+non-Conv		**37.7**	**lb/bbl**
mineral oil	9	2.9	lb/bbl
TSS	153	153.0	lb/bbl

(fromODD, p XI-6)

Cuttings			
Density		543	lbs/bbl
Adherent mud	5.0%		
Mud TSS	153		lb/bbl
Ad'nt mud TSS		7.7	lb/bbl
Total TSS per bbl cuttings		551	lb/bbl

WBF/ Mineral Oil Phase Contribution to Toxic/Non-conventional Pollutant Loadings

(from ODD: Table XI-5, p XI-7)

MO (9 lb/bbl)	30.51	mg nonconventionals/ml MO:	0.14700	kg/bbl	on-conventional = 99.8%
	0.05	mg toxics/ml MO,	0.00024	kg/bbl	toxics = 0.2%
kg toxic+Non-conventional Pollutants per bbl MO			0.147	kg/bbl	
lbs toxic + Non-conventional Pollutants per bbl MO			0.324	lb/bbl	

461	: b/bbl mud
11.0	: lb/gal mud
2.1	: gal of 5% mud
23.1	: wt of 5% mud
543	: lb/bbl cuttings
566	: lb/bbl wet cuttings

WORKSHEET No. D:

POLLUTANT LOADINGS FROM WATER-BASED DRILLING FLUIDS: CONVENTIONAL POLLUTANTS FROM ZERO DISCHARGE CUTTINGS (INJECTED ONSITE OR HAULED FOR ONSHORE DISPOSAL) DUE TO PROJECTED SHEEN OR TOXICITY TEST FAILURES, EXISTING SOURCES

POLLUTANTS FROM CUTTINGS HAULED OR INJECTED (Coventionals)		Shallow Well			Deep Well			Totals
		GOM	CA	AK	GOM	CA	AK	
(from ODD: Table XI-2, p XI-4)								
well depth, TD		10,559	7,607	10,633	13,037	10,082	12,354	
no. wells , total by region	(from Exh. 2)	857	5	4	857	5	4	866
% WBF (total - OBF) wells failing permit limits	(from Exh. 1)	5.94%	6.75%	4.77%	4.85%	4.16%	5.84%	
No. WBF wells zero discharge cuttings		51	0	0	42	0	0	93
Cuttings (bbl) per well		1,475	1,242	1,480	2,458	1,437	2,413	
CUTTINGS TSS ANALYSIS:								
lbs TSS / bbl	(from Exh. 3)	551	551	551	551	551	551	
lbs TSS per well		812,209	683,907	814,962	1,353,498	791,284	1,328,718	
total lbs TSS		**41,349,547**	-	-	**56,846,903**	-	-	**98,196,451**
Gulf of Mexico								98,196,451
California								-
Alaska								-
total volume cuttings, bbl		**75,092**	-	-	**103,236**	-	-	**178,328**
Gulf of Mexico								178,328
California								-
Alaska								-
CUTTINGS OIL ANALYSIS:								
% wells , by type and region	(from Exh. 1)	51.00%	58.00%	41.00%	49.00%	42.00%	59.00%	
total no. wells, by region	(from Exh. 2)	857	5	4	857	5	4	
no. wells, by type and region		437	3	2	420	2	2	866
% wells using MO spot or lube, zero discharge		5.59%	6.75%	4.77%	4.56%	4.16%	5.84%	
no. wells zero discharge		48	0	0	39	0	0	87
cuttings per well, bbl		1,475	1,242	1,480	2,458	1,437	2,413	
fraction adherent fluid		5.0%	5.0%	5.0%	5.0%	5.0%	5.0%	
volume adherent fluid, per well, bbl		74.0	62	74	123	72	121	
MO, lbs per bbl		9	9	9	9	9	9	
MO, lbs per well		666	558	666	1,107	648	1,089	
total lbs MO		**31,968**	-	-	**43,173**	-	-	**75,141**
Gulf of Mexico								75,141
California								-
Alaska								-
total volume MO, bbl		**3,552**	-	-	**4,797**	-	-	**8,349**
Gulf of Mexico								8,349
California								-
Alaska								-
TOTAL CONVENTIONAL POLLUTANTS								
lbs conventional pollutants zero discharge		**41,381,515**	-	-	**56,890,076**	-	-	**98,271,592**
Gulf of Mexico								98,271,592
California								-
Alaska								-
% injected onsite	onsite	20%	20%	100%	0%	0%	100%	
% hauled onshore	onshore	80%	80%	0%	100%	100%	0%	
lbs pollutants injected		**8,276,303**	-	-	-	-	-	**8,276,303**
lbs pollutants disposed onshore		**33,105,212**	-	-	**56,890,076**	-	-	**89,995,289**
Gulf of Mexico	injected onsite							8,276,303
California	injected onsite							-
Alaska	injected onsite							-
Gulf of Mexico	disposed onshore							89,995,289
California	disposed onshore							-
Alaska	disposed onshore							-
bbl conventional pollutants zero discharged		**78,644**	-	-	**108,033**	-	-	**186,677**
Gulf of Mexico	injected onsite							15,729
California	injected onsite							-
Alaska	injected onsite							-
Gulf of Mexico	disposed onshore							170,948
California	disposed onshore							-
Alaska	disposed onshore							-

WORKSHEET No. E:

POLLUTANT LOADINGS FROM WATER-BASED DRILLING FLUIDS: CONVENTIONAL POLLUTANTS FROM DRILLING FLUIDS ZERO DISCHARGED (INJECTED ONSITE OR HAULED FOR ONSHORE DISPOSAL) DUE TO PROJECTED SHEEN OR TOXICITY TEST FAILURES,EXISTING SOURCES

POLLUTANTS FROM DRILLING FLUIDS HAULED OR INJECTED (Conventionals)		Shallow Well			Deep Well			Totals
		GOM	CA	AK	GOM	CA	AK	
(from ODD: Table XI-2, p XI-4)								
Well Depth, TD		10,559	7,607	10,633	13,037	10,082	12,354	
No. wells , total		857	5	4	857	5	4	866
No. wells hauling fluids		51	0	0	42	0	0	93
Drilling fluids (bbl) per well		6,938	5,939	6,963	9,752	6,777	9,458	
WB FLUIDS TSS ANALYSIS:								
lbs TSS / bbl		153	153	153	153	153	153	
lbs TSS per well		1,061,514	908,667	1,065,339	1,492,056	1,036,881	1,447,074	
total lbs TSS		**54,041,678**	**-**	**-**	**62,666,352**	**-**	**-**	**116,708,030**
Gulf of Mexico								116,708,030
California								-
Alaska								-
total volume, bbl, WB fluids		**353,214**	**-**	**-**	**409,584**	**-**	**-**	**762,798**
Gulf of Mexico								762,798
California								-
Alaska								-
WB FLUIDS OIL ANALYSIS:								
% wells using MO spot or lube, hauling		5.59%	6.75%	4.77%	4.56%	4.16%	5.84%	
no. wells using hauling		48	-	-	39	-	-	87
WB fluids discharged per well, bbl		6,938	5,939	6,963	9,752	6,777	9,458	
MO, lbs per bbl		9	9	9	9	9	9	9
MO, lbs per well		62,442	53,451	62,667	87,768	60,993	85,122	85,122
total lbs MO		**2,997,216**	**-**	**-**	**3,422,952**	**-**	**-**	**6,420,168**
Gulf of Mexico								6,420,168
California								-
Alaska								-
total volume MO, bbl		10,049	-	-	11,476	-	-	21,525
Gulf of Mexico		482,344	-	-	447,572	-	-	929,916
California								-
Alaska								-
TOTAL CONVENTIONAL POLLUTANTS:								
lbs conventional pollutants zero discharge		**57,038,894**	**-**	**-**	**66,089,304**	**-**	**-**	**123,128,198**
Gulf of Mexico								123,128,198
California								-
Alaska								-
% injected onsite	onsite	20%	20%	100%	0%	0%	100%	
% hauled onshore	onshore	80%	80%	0%	100%	100%	0%	
lbs pollutants injected		**11,407,779**	**-**	**-**	**-**	**-**	**-**	**11,407,779**
lbs pollutants disposed onshore		**45,631,115**	**-**	**-**	**66,089,304**	**-**	**-**	**111,720,419**
Gulf of Mexico	injected onsite							11,407,779
California	injected onsite							-
Alaska	injected onsite							-
Gulf of Mexico	disposed onshore							111,720,419
California	disposed onshore							-
Alaska	disposed onshore							-
								123,128,198
bbl conventional pollutants zero discharged		**363,262**	**-**	**-**	**421,060**	**-**	**-**	**784,323**
Gulf of Mexico	injected onsite							72,652
California	injected onsite							-
Alaska	injected onsite							-
Alaska	disposed onshore							-

WORKSHEET No. F:

POLLUTANT LOADINGS FROM WATER-BASED DRILLING FLUID: TOXIC/NON-CONVENTIONAL POLLUTANTS FROM ZERO DISCHARGE DRILLING FLUIDS (INJECTED ONSITE OR HAULED FOR ONSHORE DISPOSAL) DUE TO SHEEN/TOXICITY TEST FAILURES, EXISTING SOURCES

POLLUTANTS FROM DISCHARGED DRILLING FLUIDS (Toxics & Non-conventionals)		Shallow Well			Deep Well			Totals
TOXICS HAULED		GOM	CA	AK	GOM	CA	AK	
(from ODD: Table XI-2, p XI-4)								
Well Depth, TD		10,559	7,607	10,633	13,037	10,082	12,354	
No. wells , total		857	5	4	857	5	4	866
No. wells discharging cuttings		51	0	0	42	0	0	93
Drilling fluidsDischarged (bbl) per well		6,938	5,939	6,963	9,752	6,777	9,458	
WB FLUIDS TOXICS/NON-CONVENTIONALS:								
lbs toxics/non-conventionals/ bbl	(from Exh. 3)	37.7	37.7	37.7	37.7	37.7	37.7	
lbs toxics/non-conventionals per well		261,629	223,957	262,572	367,744	255,558	356,657	
total lbs toxics/non-conventionals		**13,319,531**	**-**	**-**	**15,445,235**	**-**	**-**	**28,764,766**
Gulf of Mexico								28,764,766
California								-
Alaska								-
total volume, bbl, WB fluids		**353,214**	**-**	**-**	**409,584**	**-**	**-**	**762,798**
Gulf of Mexico								762,798
California								-
Alaska								-
WB FLUIDS MINERAL OIL TOXICS/NON-CONVENTIONALS:								
% wells using MO spot or lube, discharging	(from Exh. 1)	5.59%	0.00%	0.00%	0.00%	0.00%	0.00%	
no. wells using MO and discharging	(from Exh. 5A)	48	-	-	39	-	-	87
WB fluids discharged per well, bbl		6,938	5,939	6,963	9,752	6,777	9,458	
mineral oil toxics, lb / bbl	(from Exh. 3)	0.324	0.324	0.324	0.324	0.324	0.324	
mineral oil toxics, lbs / well		2,247	1,924	2,256	3,159	2,195	3,064	14,845
total lbs mineral oil toxics		**107,876**	**-**	**-**	**123,199**	**-**	**-**	**231,075**
Gulf of Mexico								231,075
California								-
Alaska								-
total volume MO, bbl		362	-	-	413	-	-	775
Gulf of Mexico		17,361	-	-	16,109	-	-	33,470
California								-
Alaska								-
TOTAL TOXIC/NON-CONVENTIONAL POLLUTANTS:								
lbs conventional pollutants discharged		**13,427,407**	**-**	**-**	**15,568,434**	**-**	**-**	**28,995,841**
Gulf of Mexico								28,995,841
California								-
Alaska								-
% injected onsite	onsite	20%	20%	100%	0%	0%	100%	
% hauled onshore	onshore	80%	80%	0%	100%	100%	0%	
lbs pollutants injected		2,685,481	-	-	-	-	-	2,685,481
lbs pollutants disposed onshore		10,741,926	-	-	15,568,434	-	-	26,310,360
Gulf of Mexico	injected onsite							2,685,481
California	injected onsite							-
Alaska	injected onsite							-
Gulf of Mexico	disposed onshore							26,310,360
California	disposed onshore							-
Alaska	disposed onshore							-
								28,995,841
bbl conventional pollutants discharged		**353,575**	**-**	**-**	**409,997**	**-**	**-**	**763,572**
Gulf of Mexico	injected onsite							70,715
California	injected onsite							-
Alaska	injected onsite							-
Gulf of Mexico	disposed onshore							692,857
California	disposed onshore							-
Alaska	disposed onshore							-

WORKSHEET G:

Baseline (WBF) Existing Sources - Lower Bound WBF Failure Rate (0%)

Summary of Total Baseline Water-Based Fluids Onsite Discharge and Zero Discharge/Onshore Disposal Loadings		GOM	CA	AK	Total
ONSITE DISCHARGE: Loadings, Cuttings	Conventionals	838,205,767	3,634,290	3,472,399	845,312,456
ONSITE DISCHARGE: Loadings, Fluids	Conventionals	1,008,839,780	4,799,763	3,959,487	1,017,599,030
	Toxics + Non-conventionals	246,038,746	1,182,987	975,886	248,197,619
	Total Drilling Fluids	1,254,878,526	5,982,750	4,935,373	1,265,796,649
TOTAL ONSITE DISCHARGE LOADINGS		**2,093,084,293**	**9,617,040**	**8,407,772**	**2,111,109,104**
ZD/ONSHORE DISPOSAL: Loadings, Cuttings	Conventionals	-	-	-	-
ZD/ONSHORE DISPOSAL: Loadings, Fluids	Conventionals	-	-	-	-
	Toxics + Non-conventionals	-	-	-	-
	Total Drilling Fluids	-	-	-	-
TOTAL ZD/ONSHORE DISPOSAL LOADINGS		-	-	-	-
	Onsite Injection	-	-	-	-
	Haul/Onshore Disposal	-	-	-	-
TOTAL ONSITE AND ZD/ONSHORE BASELINE WBF POLLUTANT LOADINGS		**2,093,084,293**	**9,617,040**	**8,407,772**	**2,111,109,104**

BAT 1 & 2 (WBF) Existing Sources - Lower Bound WBF Failure Rate (0%)

Summary of Total Baseline Water-Based Fluids Onsite Discharge and Zero Discharge/Onshore Disposal Loadings		GOM	CA	AK	Total
ONSITE DISCHARGE: Loadings, Cuttings	Conventionals	786,319,752	3,634,290	3,472,399	793,426,441
ONSITE DISCHARGE: Loadings, Fluids	Conventionals	946,379,702	4,799,763	3,959,487	955,138,952
	Toxics + Non-conventionals	230,802,429	1,182,987	975,886	232,961,301
	Total Drilling Fluids	1,177,182,130	5,982,750	4,935,373	1,188,100,253
TOTAL ONSITE DISCHARGE LOADINGS		**1,963,501,883**	**9,617,040**	**8,407,772**	**1,981,526,694**
ZD/ONSHORE DISPOSAL: Loadings, Cuttings	Conventionals	-	-	-	-
ZD/ONSHORE DISPOSAL: Loadings, Fluids	Conventionals	-	-	-	-
	Toxics + Non-conventionals	-	-	-	-
	Total Drilling Fluids	-	-	-	-
TOTAL ZD/ONSHORE DISPOSAL LOADINGS		-	-	-	-
	Onsite Injection	-	-	-	-
	Haul/Onshore Disposal	-	-	-	-
TOTAL ONSITE AND ZD/ONSHORE BASELINE WBF POLLUTANT LOADINGS		**1,963,501,883**	**9,617,040**	**8,407,772**	**1,981,526,694**

WORKSHEET G:
BAT 3 (WBF) Existing Sources - Lower Bound WBF Failure Rate (0%)

Summary of Total Baseline Water-Based Fluids Onsite Discharge and Zero Discharge/Onshore Disposal Loadings

		GOM	CA	AK	Total
ONSITE DISCHARGE: Loadings, Cuttings	Conventionals	858,659,743	3,634,290	3,472,399	865,766,432
ONSITE DISCHARGE: Loadings, Fluids	Conventionals	1,033,437,358	4,799,763	3,959,487	1,042,196,608
	Toxics + Non-conventionals	252,024,882	1,182,987	975,886	254,183,755
	Total Drilling Fluids	1,285,462,241	5,982,750	4,935,373	1,296,380,363
TOTAL ONSITE DISCHARGE LOADINGS		**2,144,121,984**	**9,617,040**	**8,407,772**	**2,162,146,796**
ZD/ONSHORE DISPOSAL: Loadings, Cuttings	Conventionals	-	-	-	-
ZD/ONSHORE DISPOSAL: Loadings, Fluids	Conventionals	-	-	-	-
	Toxics + Non-conventionals	-	-	-	-
	Total Drilling Fluids	-	-	-	-
TOTAL ZD/ONSHORE DISPOSAL LOADINGS		-	-	-	-
	Onsite Injection	-	-	-	-
	Haul/Onshore Disposal	-	-	-	-
TOTAL ONSITE AND ZD/ONSHORE BASELINE WBF POLLUTANT LOADINGS		**2,144,121,984**	**9,617,040**	**8,407,772**	**2,162,146,796**

DISCHARGE S >>>	-	2,111,109,104	total toxic/non-conv:	baseline	248,197,619	total conventionals: baseline	1,862,911,486
	-	1,981,526,694		BAT 1 & 2	232,961,301	BAT 1 & 2	1,748,565,393
	-	2,162,146,796		BAT 3	254,183,755	BAT 3	1,907,963,040
				Incr BAT 1 &2	(15,236,318)	Incr BAT 1 &2	(114,346,092)
				Incr BAT 3	5,986,136	Incr BAT 3	45,051,555

WORKSHEET H:

Baseline (WBF) Existing Sources - Upper Bound WBF Failure Rate (10.73%)

Summary of Total Baseline Water-Based Fluids Onsite Discharge and Zero Discharge/Onshore Disposal Loadings		GOM	CA	AK	Total
ONSITE DISCHARGE: Loadings, Cuttings	Conventionals	739,934,175	3,634,290	3,472,399	747,040,864
ONSITE DISCHARGE: Loadings, Fluids	Conventionals	885,711,582	4,799,763	3,959,487	894,470,832
	Toxics + Non-conventionals	217,042,905	1,182,987	975,886	219,201,778
	Total Drilling Fluids	1,102,754,487	5,982,750	4,935,373	1,113,672,610
TOTAL ONSITE DISCHARGE LOADINGS		1,842,688,662	9,617,040	8,407,772	1,860,713,474
ZD/ONSHORE DISPOSAL: Loadings, Cuttings	Conventionals	98,271,592	-	-	98,271,592
ZD/ONSHORE DISPOSAL: Loadings, Fluids	Conventionals	123,128,198	-	-	123,128,198
	Toxics + Non-conventionals	28,995,841	-	-	28,995,841
	Total Drilling Fluids	152,124,039	-	-	152,124,039
TOTAL ZD/ONSHORE DISPOSAL LOADINGS		250,395,631	-	-	250,395,631
	Onsite Injection	22,369,563	-	-	22,369,563
	Haul/Onshore Disposal	228,026,068	-	-	228,026,068
TOTAL ONSITE AND ZD/ONSHORE BASELINE WBF POLLUTANT LOADINGS		**2,093,084,293**	**9,617,040**	**8,407,772**	**2,111,109,104**

BAT 1 & 2 (WBF) Existing Sources - Upper Bound WBF Failure Rate (10.73%)

Summary of Total Baseline Water-Based Fluids Onsite Discharge and Zero Discharge/Onshore Disposal Loadings		GOM	CA	AK	Total
ONSITE DISCHARGE: Loadings, Cuttings	Conventionals	694,720,056	3,634,290	3,472,399	701,826,745
ONSITE DISCHARGE: Loadings, Fluids	Conventionals	831,497,994	4,799,763	3,959,487	840,257,244
	Toxics + Non-conventionals	203,762,708	1,182,987	975,886	205,921,580
	Total Drilling Fluids	1,035,260,702	5,982,750	4,935,373	1,046,178,824
TOTAL ONSITE DISCHARGE LOADINGS		1,729,980,757	9,617,040	8,407,772	1,748,005,569
ZD/ONSHORE DISPOSAL: Loadings, Cuttings	Conventionals	91,599,697	0	0	91,599,697
ZD/ONSHORE DISPOSAL: Loadings, Fluids	Conventionals	114,881,708	0	0	114,881,708
	Toxics + Non-conventionals	27,039,721	0	0	27,039,721
	Total Drilling Fluids	141,921,429	0	0	141,921,429
TOTAL ZD/ONSHORE DISPOSAL LOADINGS		233,521,125	0	0	233,521,125
	Onsite Injection	20,959,454	0	0	20,959,454
	Haul/Onshore Disposal	212,561,671	0	0	212,561,671
TOTAL ONSITE AND ZD/ONSHORE BASELINE WBF POLLUTANT LOADINGS		**1,963,501,883**	**9,617,040**	**8,407,772**	**1,981,526,694**

WORKSHEET H:
BAT 3 (WBF) Existing Sources - Upper Bound WBF Failure Rate (10.73%)

Summary of Total Baseline Water-Based Fluids Onsite Discharge and Zero Discharge/Onshore Disposal Loadings

		GOM	CA	AK	Total
ONSITE DISCHARGE: Loadings, Cuttings	Conventionals	758,074,474	3,634,290	3,472,399	765,181,163
ONSITE DISCHARGE: Loadings, Fluids	Conventionals	907,414,308	4,799,763	3,959,487	916,173,558
	Toxics + Non-conventionals	222,347,169	1,182,987	975,886	224,506,042
	Total Drilling Fluids	1,129,761,477	5,982,750	4,935,373	1,140,679,600
TOTAL ONSITE DISCHARGE LOADINGS		1,887,835,951	9,617,040	8,407,772	1,905,860,763
ZD/ONSHORE DISPOSAL: Loadings, Cuttings	Conventionals	100,585,269	-	-	100,585,269
ZD/ONSHORE DISPOSAL: Loadings, Fluids	Conventionals	126,023,050	-	-	126,023,050
	Toxics + Non-conventionals	29,677,713	-	-	29,677,713
	Total Drilling Fluids	155,700,764	-	-	155,700,764
TOTAL ZD/ONSHORE DISPOSAL LOADINGS		256,286,033	-	-	256,286,033
	Onsite Injection	22,886,577	-	-	22,886,577
	Haul/Onshore Disposal	233,399,455	-	-	233,399,455
TOTAL ONSITE AND ZD/ONSHORE BASELINE WBF POLLUTANT LOADINGS		**2,144,121,984**	**9,617,040**	**8,407,772**	**2,162,146,796**

DISCHARGE S >>>	-	1,860,713,474	total toxic/non-conv: baseline	219,201,778	total conventionals: baseline	1,641,511,696
	-	1,748,005,569	BAT 1 & 2	205,921,580	BAT 1 & 2	1,542,083,989
	-	1,905,860,763	BAT 3	224,506,042	BAT 3	1,681,354,721
			Incr BAT 1 &2	(13,280,197)	Incr BAT 1 &2	(99,427,707)
			Incr BAT 3	5,304,264	Incr BAT 3	39,843,025

WORKSHEET AA: SUMMARY OF EXISTING SOURCE DRILLING FLUID DISPOSAL LOADINGS BY REGION, OPTION, FLUID TYPE, AND LOCATION

Gulf of Mexico -- Lower Failure Rate

		Onsite Discharge	Zero Discharge Alternative Disposal Methods		Total Media Pollutant Loadings	Net Loadings (Reductions), lbs		
			Onsite Injection	Haul/ Onshore Disposal		Onsite (marine) Discharges	Onshore Disposal	All Media Totals
Baseline								
	wbf	2,093,084,293	0	0	2,093,084,293			
	sbf	237,890,828	0	0	237,890,828			
	obf	0	11,862,178	47,448,711	59,310,889			
	total	2,330,975,121	11,862,178	47,448,711	2,390,286,010			
BAT 1								
	wbf	1,963,501,883	0	0	1,963,501,883			
	sbf	259,628,314	0	0	259,628,314			
	obf	0	7,092,172	28,368,689	35,460,861			
	total	2,223,130,197	7,092,172	28,368,689	2,258,591,058	-107,844,924	-23,850,028	-131,694,952
BAT 2								
	wbf	1,963,501,883	0	0	1,963,501,883			
	sbf	252,066,749	0	7,561,565	259,628,314			
	obf	0	7,092,172	28,368,689	35,460,861			
	total	2,215,568,632	7,092,172	35,930,254	2,258,591,058	-115,406,489	-16,288,463	-131,694,952
BAT 3								
	wbf	2,144,121,984	0	0	2,144,121,984			
	sbf	0	0	19,766,219	19,766,219			
	obf	0	36,101,236	204,866,907	240,968,143			
	total	2,144,121,984	36,101,236	224,633,126	2,404,856,346	-186,853,137	201,423,473	14,570,336

California -- Lower Failure Rate

		Onsite Discharge	Zero Discharge Alternative Disposal Methods		Total Media Pollutant Loadings	Net Loadings (Reductions), lbs		
			Onsite Injection	Haul/ Onshore Disposal		Onsite (marine) Discharges	Onshore Disposal	All Media Totals
Baseline								
	wbf	9,617,040	0	0	9,617,040			
	sbf	0	0	0	0			
	obf	0	1,945,148	0	1,945,148			
	total	9,617,040	1,945,148	0	11,562,188			
BAT 1								
	wbf	9,617,040	0	0	9,617,040			
	sbf	0	0	0	0			
	obf	0	1,945,148	0	1,945,148			
	total	9,617,040	1,945,148	0	11,562,188	0	0	-
BAT 2								
	wbf	9,617,040	0	0	9,617,040			
	sbf	0	0	0	0			
	obf	0	1,945,148	0	1,945,148			
	total	9,617,040	1,945,148	0	11,562,188	0	0	-
BAT 3								
	wbf	9,617,040	0	0	9,617,040			
	sbf	0	0	0	0			
	obf	0	1,945,148	0	1,945,148			
	total	9,617,040	1,945,148	0	11,562,188	0	0	-

WORKSHEET AA: SUMMARY OF EXISTING SOURCE DRILLING FLUID DISPOSAL LOADINGS BY REGION, OPTION, FLUID TYPE, AND LOCATION

Cook Inlet, Alaska -- Lower Failure Rate

		Onsite Discharge	Zero Discharge Alternative Disposal Methods		Total Media Pollutant Loadings	Net Loadings (Reductions), lbs		
			Onsite Injection	Haul/ Onshore Disposal		Onsite (marine) Discharges	Onshore Disposal	All Media Totals
Baseline								
	wbf	8,407,772	0	0	8,407,772			
	sbf	0	0	0	0			
	obf	0	1,945,148	0	1,945,148			
	total	8,407,772	1,945,148	0	10,352,920			
BAT 1								
	wbf	8,407,772	0	0	8,407,772			
	sbf	552,796	0	0	552,796			
	obf	0	1,316,784	0	1,316,784			
	total	8,960,568	1,316,784	0	10,277,352	552,796	-628,364	-75,568
BAT 2								
	wbf	8,407,772	0	0	8,407,772			
	sbf	536,696	16,100	0	552,796			
	obf	0	1,316,784	0	1,316,784			
	total	8,944,468	1,332,884	0	10,277,352	536,696	-612,264	-75,568
BAT 3								
	wbf	8,407,772	0	0	8,407,772			
	sbf	0	0	0	0			
	obf	0	1,945,148	0	1,945,148			
	total	8,407,772	1,945,148	0	10,352,920	0	0	-

TOTAL -- Lower Failure Rate

		Onsite Discharge	Zero Discharge Alternative Disposal Methods		Total Media Pollutant Loadings	Net Loadings (Reductions), lbs		
			Onsite Injection	Haul/ Onshore Disposal		Onsite (marine) Discharges	Onshore Disposal	All Media Totals
Baseline								
	wbf	2,111,109,104	0	0	2,111,109,104			
	sbf	237,890,828	0	0	237,890,828			
	obf	0	15,752,474	47,448,711	63,201,185			
	total	2,348,999,932	15,752,474	47,448,711	2,412,201,117			
BAT 1								
	wbf	1,981,526,694	0	0	1,981,526,694			
	sbf	260,181,110	0	0	260,181,110			
	obf	0	10,354,104	28,368,689	38,722,793			
	total	2,241,707,804	10,354,104	28,368,689	2,280,430,597	-107,292,128	-24,478,392	-131,770,520
BAT 2								
	wbf	1,981,526,694	0	0	1,981,526,694			
	sbf	252,603,445	16,100	7,561,565	260,181,110			
	obf	0	10,354,104	28,368,689	38,722,793			
	total	2,234,130,139	10,370,204	35,930,254	2,280,430,597	-114,869,793	-16,900,727	-131,770,520
BAT 3								
	wbf	2,162,146,796	0	0	2,162,146,796			
	sbf	0	0	19,766,219	19,766,219			
	obf	0	39,991,532	204,866,907	244,858,439			
	total	2,162,146,796	39,991,532	224,633,126	2,426,771,454	-186,853,137	201,423,473	14,570,336

WORKSHEET AA: SUMMARY OF EXISTING SOURCE DRILLING FLUID DISPOSAL LOADINGS BY REGION, OPTION, FLUID TYPE, AND LOCATION

INCREMENTAL LOADINGS (REDUCTIONS) **Existing Sources**

		Onsite Discharge	Zero Discharge Alternative Disposal Methods		Total Media Pollutant Loadings
			Onsite Injection	Haul/ Onshore Disposal	
Baseline					
	wbf				
	sbf				
	obf				
	total				
BAT 1					
	wbf	-129,582,410	0	0	-129,582,410
	sbf	22,290,282	0	0	22,290,282
	obf	0	-5,398,370	-19,080,022	-24,478,392
	total	-107,292,128	-5,398,370	-19,080,022	-131,770,520
BAT 2					
	wbf	-129,582,410	0	0	-129,582,410
	sbf	14,712,617	16,100	7,561,565	22,290,282
	obf	0	-5,398,370	-19,080,022	-24,478,392
	total	-114,869,793	-5,382,270	-11,518,457	-131,770,520
BAT 3					
	wbf	51,037,691	0	0	51,037,691
	sbf	-237,890,828	0	19,766,219	-218,124,609
	obf	0	24,239,058	157,418,196	181,657,254
	total	-186,853,137	24,239,058	177,184,415	14,570,336

SUMMARY TOTAL LOADINGS (REDUCTIONS) **Existing Sources**

		Onsite Discharge	Zero Discharge Alternative Disposal Methods		Total Media Pollutant Loadings
			Onsite Injection	Haul/ Onshore Disposal	
Baseline	total	2,348,999,932	15,752,474	47,448,711	2,412,201,117
BAT 1	total	2,241,707,804	10,354,104	28,368,689	2,280,430,597
BAT 2	total	2,234,130,139	10,370,204	35,930,254	2,280,430,597
BAT 3	total	2,162,146,796	39,991,532	224,633,126	2,426,771,454

SUMMARY INCREMENTAL LOADINGS (REDUCTIONS) **Existing Sources**

		Onsite Discharge	Zero Discharge Alternative Disposal Methods		Total Media Pollutant Loadings
			Onsite Injection	Haul/ Onshore Disposal	
Baseline		NA	NA	NA	NA
BAT 1	total	-107,292,128	-5,398,370	-19,080,022	-131,770,520
BAT 2	total	-114,869,793	-5,382,270	-11,518,457	-131,770,520
BAT 3	total	-186,853,137	24,239,058	177,184,415	14,570,336

WORKSHEET No. I:

POLLUTANT LOADINGS FROM WATER-BASED DRILLING FLUIDS: CONVENTIONAL POLLUTANTS FROM ZERO DISCHARGE CUTTINGS, (INJECTED ONSITE OR HAULED FOR ONSHORE DISPOSAL) DUE TO PROJECTED SHEEN OR TOXICITY TEST FAILURES, NEW SOURCES

POLLUTANTS FROM CUTTINGS HAULED OR INJECTED (Coventionals)		Shallow Well			Deep Well			Totals
		GOM	CA	AK	GOM	CA	AK	
(from ODD: Table XI-2, p XI-4)								
well depth, TD		10,559	7,607	10,633	13,037	10,082	12,354	
no. wells , total by region	(from Exh. 2)	38	-	-	38	-	-	38
% WBF (total - OBF) wells failing permit limits	(from Exh. 1)	5.94%	6.75%	4.77%	4.85%	4.16%	5.84%	
No. WBF wells zero discharge cuttings		2	0	0	2	0	0	4
Cuttings (bbl) per well		1,475	1,242	1,480	2,458	1,437	2,413	
CUTTINGS TSS ANALYSIS:								
lbs TSS / bbl	(from Exh. 3)	551	551	551	551	551	551	
lbs TSS per well		812,209	683,907	814,962	1,353,498	791,284	1,328,718	
total lbs TSS		**1,624,418**	**0**	**0**	**2,706,995**	**0**	**0**	**4,331,413**
Gulf of Mexico								4,331,413
California								-
Alaska								-
total volume cuttings, bbl		**2,950**	**0**	**0**	**4,916**	**0**	**0**	**7,866**
Gulf of Mexico								7,866
California								-
Alaska								-
CUTTINGS OIL ANALYSIS:								
% wells , by type and region	(from Exh. 1)	51.00%	58.00%	41.00%	49.00%	42.00%	59.00%	
total no. wells, by region	(from Exh. 2)	38	-	-	38	-	-	
no. wells, by type and region		19	0	0	19	0	0	38
% wells using MO spot or lube, zero discharge		5.59%	6.75%	4.77%	4.56%	4.16%	5.84%	
no. wells zero discharge		2	0	0	2	0	0	4
cuttings per well, bbl		1,475	1,242	1,480	2,458	1,437	2,413	
fraction adherent fluid		5.0%	5.0%	5.0%	5.0%	5.0%	5.0%	
volume adherent fluid, per well, bbl		74.0	62	74	123	72	121	
MO, lbs per bbl		9	9	9	9	9	9	
MO, lbs per well		666	558	666	1,107	648	1,089	
total lbs MO		**1,332**	**0**	**0**	**2,214**	**0**	**0**	**3,546**
Gulf of Mexico								3,546
California								-
Alaska								-
total volume MO, bbl		**148**	**0**	**0**	**246**	**0**	**0**	**394**
Gulf of Mexico								394
California								-
Alaska								-
TOTAL CONVENTIONAL POLLUTANTS								
lbs conventional pollutants zero discharge		**1,625,750**	**0**	**0**	**2,709,209**	**0**	**0**	**4,334,959**
Gulf of Mexico								4,334,959
California								-
Alaska								-
% injected onsite	onsite	20%	20%	100%	0%	0%	100%	
% hauled onshore	onshore	80%	80%	0%	100%	100%	0%	
lbs pollutants injected		**325,150**	**0**	**0**	**0**	**0**	**0**	**325,150**
lbs pollutants disposed onshore		**1,300,600**	**0**	**0**	**2,709,209**	**0**	**0**	**4,009,809**
Gulf of Mexico	injected onsite							325,150
California	injected onsite							-
Alaska	injected onsite							-
Gulf of Mexico	disposed onshore							4,009,809
California	disposed onshore							-
Alaska	disposed onshore							-
bbl conventional pollutants zero discharged		**3,098**	**0**	**0**	**5,162**	**0**	**0**	**8,260**
Gulf of Mexico	injected onsite							620
California	injected onsite							-
Alaska	injected onsite							-
Gulf of Mexico	disposed onshore							7,640
California	disposed onshore							-
Alaska	disposed onshore							-

WORKSHEET No. J:

POLLUTANT LOADINGS FROM WATER-BASED DRILLING FLUIDS: CONVENTIONAL POLLUTANTS FROM DRILLING FLUIDS ZERO DISCHARGED (INJECTED ONSITE OR HAULED FOR ONSHORE DISPOSAL) DUE TO PROJECTED SHEEN OR TOXICITY TEST FAILURES, NEW SOURCES

POLLUTANTS FROM DRILLING FLUIDS HAULED OR INJECTED (Conventionals)		Shallow Well			Deep Well			Totals
		GOM	CA	AK	GOM	CA	AK	
(from ODD: Table XI-2, p XI-4)								
Well Depth, TD		10,559	7,607	10,633	13,037	10,082	12,354	
No. wells , total		38	-	-	38	-	-	38
No. wells hauling fluids		2	0	0	2	0	0	4
Drilling fluids (bbl) per well		6,938	5,939	6,963	9,752	6,777	9,458	
WB FLUIDS TSS ANALYSIS:								
lbs TSS / bbl		153	153	153	153	153	153	
lbs TSS per well		1,061,514	908,667	1,065,339	1,492,056	1,036,881	1,447,074	
total lbs TSS		**2,123,028**	**-**	**-**	**2,984,112**	**-**	**-**	**5,107,140**
Gulf of Mexico								5,107,140
California								-
Alaska								-
total volume, bbl, WB fluids		**13,876**	**-**	**-**	**19,504**	**-**	**-**	**33,380**
Gulf of Mexico								33,380
California								-
Alaska								-
WB FLUIDS OIL ANALYSIS:								
% wells using MO spot or lube, hauling		5.59%	6.75%	4.77%	4.56%	4.16%	5.84%	
no. wells using hauling		2	-	-	2	-	-	4
WB fluids discharged per well, bbl		6,938	5,939	6,963	9,752	6,777	9,458	
MO, lbs per bbl		9	9	9	9	9	9	9
MO, lbs per well		62,442	53,451	62,667	87,768	60,993	85,122	85,122
total lbs MO		**124,884**	**-**	**-**	**175,536**	**-**	**-**	**300,420**
Gulf of Mexico								300,420
California								-
Alaska								-
total volume MO, bbl		419	-	-	589	-	-	1,007
Gulf of Mexico		837	-	-	1,177	-	-	2,014
California								-
Alaska								-
TOTAL CONVENTIONAL POLLUTANTS:								
lbs conventional pollutants zero discharge		**2,247,912**	**-**	**-**	**3,159,648**	**-**	**-**	**5,407,560**
Gulf of Mexico								5,407,560
California								-
Alaska								-
% injected onsite	onsite	20%	20%	100%	0%	0%	100%	
% hauled onshore	onshore	80%	80%	0%	100%	100%	0%	
lbs pollutants injected		**449,582**	**-**	**-**	**-**	**-**	**-**	**449,582**
lbs pollutants disposed onshore		**1,798,330**	**-**	**-**	**3,159,648**	**-**	**-**	**4,957,978**
Gulf of Mexico	injected onsite							**449,582**
California	injected onsite							-
Alaska	injected onsite							-
Gulf of Mexico	disposed onshore							**4,957,978**
California	disposed onshore							-
Alaska	disposed onshore							-
								5,407,560
bbl conventional pollutants zero discharged		**14,295**	**-**	**-**	**20,093**	**-**	**-**	**34,387**
Gulf of Mexico	injected onsite							2,859
California	injected onsite							-
Alaska	injected onsite							-
Alaska	disposed onshore							-

WORKSHEET No. K:

POLLUTANT LOADINGS FROM WATER-BASED DRILLING FLUID: TOXIC/NON-CONVENTIONAL POLLUTANTS FROM ZERO DISCHARGE DRILLING FLUIDS (INJECTED ONSITE OR HAULED FOR ONSHORE DISPOSAL) DUE TO SHEEN/TOXICITY TEST FAILURES, NEW SOURCES

POLLUTANTS FROM DISCHARGED DRILLING FLUIDS (Toxics & Non-conventionals)		Shallow Well			Deep Well			Totals
TOXICS HAULED		GOM	CA	AK	GOM	CA	AK	
(from ODD: Table XI-2, p XI-4)								
Well Depth, TD		10,559	7,607	10,633	13,037	10,082	12,354	
No. wells , total		38	-	-	38	-	-	38
No. wells discharging cuttings		2	0	0	2	0	0	4
Drilling fluidsDischarged (bbl) per well		6,938	5,939	6,963	9,752	6,777	9,458	
WB FLUIDS TOXICS/NON-CONVENTIONALS:								
lbs toxics/non-conventionals/ bbl	(from Exh. 3)	37.7	37.7	37.7	37.7	37.7	37.7	
lbs toxics/non-conventionals per well		261,629	223,957	262,572	367,744	255,558	356,657	
total lbs toxics/non-conventionals		**523,258**	**-**	**-**	**735,487**	**-**	**-**	**1,258,745**
Gulf of Mexico								1,258,745
California								-
Alaska								-
total volume, bbl, WB fluids		**13,876**	**-**	**-**	**19,504**	**-**	**-**	**33,380**
Gulf of Mexico								33,380
California								-
Alaska								-
WB FLUIDS MINERAL OIL TOXICS/NON-CONVENTIONALS:								
% wells using MO spot or lube, discharging	(from Exh. 1)	5.59%	0.00%	0.00%	0.00%	0.00%	0.00%	
no. wells using MO and discharging	(from Exh. 5A)	2	-	-	2	-	-	4
WB fluids discharged per well, bbl		6,938	5,939	6,963	9,752	6,777	9,458	
mineral oil toxics, lb / bbl	(from Exh. 3)	9.000	9.000	9.000	9.000	9.000	9.000	
mineral oil toxics, lbs / well		62,442	53,451	62,667	87,768	60,993	85,122	412,443
total lbs mineral oil toxics		**124,884**	**-**	**-**	**175,536**	**-**	**-**	**300,420**
Gulf of Mexico								300,420
California								-
Alaska								-
total volume MO, bbl		419	-	-	589	-	-	1,007
Gulf of Mexico		837	-	-	1,177	-	-	2,014
California								-
Alaska								-
TOTAL TOXIC/NON-CONVENTIONAL POLLUTANTS:								
lbs conventional pollutants discharged		**648,142**	**-**	**-**	**911,023**	**-**	**-**	**1,559,165**
Gulf of Mexico								1,559,165
California								-
Alaska								-
% injected onsite	onsite	20%	20%	100%	0%	0%	100%	
% hauled onshore	onshore	80%	80%	0%	100%	100%	0%	
lbs pollutants injected		**129,628**	**-**	**-**	**-**	**-**	**-**	**129,628**
lbs pollutants disposed onshore		**518,514**	**-**	**-**	**911,023**	**-**	**-**	**1,429,537**
Gulf of Mexico	injected onsite							129,628
California	injected onsite							-
Alaska	injected onsite							-
Gulf of Mexico	disposed onshore							1,429,537
California	disposed onshore							-
Alaska	disposed onshore							-
								1,559,165
bbl conventional pollutants discharged		**14,295**	**-**	**-**	**20,093**	**-**	**-**	**34,387**
Gulf of Mexico	injected onsite							2,859
California	injected onsite							-
Alaska	injected onsite							-
Gulf of Mexico	disposed onshore							31,528
California	disposed onshore							-
Alaska	disposed onshore							-

WORKSHEET L:

Baseline (WBF) New Sources - Lower Bound WBF Failure Rate (0%)

Summary of Total Baseline Water-Based Fluids Onsite Discharge and Zero Discharge/Onshore Disposal Loadings		GOM	CA	AK	Total
ONSITE DISCHARGE: Loadings, Cuttings	Conventionals	37,095,021	-	-	37,095,021
ONSITE DISCHARGE: Loadings, Fluids	Conventionals	44,642,502	-	-	44,642,502
	Toxics + Non-conventionals	11,166,082	-	-	11,166,082
	Total Drilling Fluids	55,808,584	-	-	55,808,584
TOTAL ONSITE DISCHARGE LOADINGS		**92,903,606**	**-**	**-**	**92,903,606**
ZD/ONSHORE DISPOSAL: Loadings, Cuttings	Conventionals	-	-	-	-
ZD/ONSHORE DISPOSAL: Loadings, Fluids	Conventionals	-	-	-	-
	Toxics + Non-conventionals	-	-	-	-
	Total Drilling Fluids	-	-	-	-
TOTAL ZD/ONSHORE DISPOSAL LOADINGS		-	-	-	-
	Onsite Injection	-	-	-	-
	Haul/Onshore Disposal	-	-	-	-
TOTAL ONSITE AND ZD/ONSHORE BASELINE WBF POLLUTANT LOADINGS		**92,903,606**	**-**	**-**	**92,903,606**

BAT 1 & 2 (WBF) New Sources - Lower Bound WBF Failure Rate (0%)

Summary of Total Baseline Water-Based Fluids Onsite Discharge and Zero Discharge/Onshore Disposal Loadings		GOM	CA	AK	Total
ONSITE DISCHARGE: Loadings, Cuttings	Conventionals	34,928,208	-	-	34,928,208
ONSITE DISCHARGE: Loadings, Fluids	Conventionals	42,001,164	-	-	42,001,164
	Toxics + Non-conventionals	10,533,551	-	-	10,533,551
	Total Drilling Fluids	52,534,715	-	-	52,534,715
TOTAL ONSITE DISCHARGE LOADINGS		**87,462,923**	**-**	**-**	**87,462,923**
ZD/ONSHORE DISPOSAL: Loadings, Cuttings	Conventionals	-	-	-	-
ZD/ONSHORE DISPOSAL: Loadings, Fluids	Conventionals	-	-	-	-
	Toxics + Non-conventionals	-	-	-	-
	Total Drilling Fluids	-	-	-	-
TOTAL ZD/ONSHORE DISPOSAL LOADINGS		-	-	-	-
	Onsite Injection	-	-	-	-
	Haul/Onshore Disposal	-	-	-	-
TOTAL ONSITE AND ZD/ONSHORE BASELINE WBF POLLUTANT LOADINGS		**87,462,923**	**-**	**-**	**87,462,923**

WORKSHEET L:
BAT 3 (WBF) New Sources - Lower Bound WBF Failure Rate (0%)

Summary of Total Baseline Water-Based Fluids Onsite Discharge and Zero Discharge/Onshore Disposal Loadings		GOM	CA	AK	Total
ONSITE DISCHARGE: Loadings, Cuttings	Conventionals	40,072,937	-	-	40,072,937
ONSITE DISCHARGE: Loadings, Fluids	Conventionals	48,257,586	-	-	48,257,586
	Toxics + Non-conventionals	12,057,084	-	-	12,057,084
	Total Drilling Fluids	60,314,670	-	-	60,314,670
TOTAL ONSITE DISCHARGE LOADINGS		**100,387,607**	**-**	**-**	**100,387,607**
ZD/ONSHORE DISPOSAL: Loadings, Cuttings	Conventionals	-	-	-	-
ZD/ONSHORE DISPOSAL: Loadings, Fluids	Conventionals	-	-	-	-
	Toxics + Non-conventionals	-	-	-	-
	Total Drilling Fluids	-	-	-	-
TOTAL ZD/ONSHORE DISPOSAL LOADINGS		-	-	-	-
	Onsite Injection	-	-	-	-
	Haul/Onshore Disposal	-	-	-	-
TOTAL ONSITE AND ZD/ONSHORE BASELINE WBF POLLUTANT LOADINGS		**100,387,607**	**-**	**-**	**100,387,607**

-	92,903,606	total toxic/non-conv: baseline	11,166,082	total conventionals: baseline	81,737,523
-	87,462,923	BAT 1 & 2	10,533,551	BAT 1 & 2	76,929,372
-	100,387,607	BAT 3	12,057,084	BAT 3	88,330,523
		Incr BAT 1 &2	(632,532)	Incr BAT 1 &2	(4,808,151)
		Incr BAT 3	891,002	Incr BAT 3	6,592,999

WORKSHEET M:

Baseline (WBF) New Sources - Upper Bound WBF Failure Rate (0%)

Summary of Total Baseline Water-Based Fluids Onsite Discharge and Zero Discharge/Onshore Disposal Loadings		GOM	CA	AK	Total
ONSITE DISCHARGE: Loadings, Cuttings	Conventionals	32,760,063	-	-	32,760,063
ONSITE DISCHARGE: Loadings, Fluids	Conventionals	39,234,942	-	-	39,234,942
	Toxics + Non-conventionals	9,606,917	-	-	9,606,917
	Total Drilling Fluids	48,841,859	-	-	48,841,859
TOTAL ONSITE DISCHARGE LOADINGS		81,601,922	-	-	81,601,922
ZD/ONSHORE DISPOSAL: Loadings, Cuttings	Conventionals	4,334,959	-	-	4,334,959
ZD/ONSHORE DISPOSAL: Loadings, Fluids	Conventionals	5,407,560	-	-	5,407,560
	Toxics + Non-conventionals	1,559,165	-	-	1,559,165
	Total Drilling Fluids	6,966,725	-	-	6,966,725
TOTAL ZD/ONSHORE DISPOSAL LOADINGS		11,301,684	-	-	11,301,684
	Onsite Injection	904,361	-	-	904,361
	Haul/Onshore Disposal	10,397,324	-	-	10,397,324
TOTAL ONSITE AND ZD/ONSHORE BASELINE WBF POLLUTANT LOADINGS		**92,903,606**	**-**	**-**	**92,903,606**

BAT 1 & 2 (WBF) New Sources - Upper Bound WBF Failure Rate (0%)

Summary of Total Baseline Water-Based Fluids Onsite Discharge and Zero Discharge/Onshore Disposal Loadings		GOM	CA	AK	Total
ONSITE DISCHARGE: Loadings, Cuttings	Conventionals	30,593,249	0	0	30,593,249
ONSITE DISCHARGE: Loadings, Fluids	Conventionals	36,593,604	0	0	36,593,604
	Toxics + Non-conventionals	8,974,385	0	0	8,974,385
	Total Drilling Fluids	45,567,989	0	0	45,567,989
TOTAL ONSITE DISCHARGE LOADINGS		76,161,239	0	0	76,161,239
ZD/ONSHORE DISPOSAL: Loadings, Cuttings	Conventionals	4,334,959	0	0	4,334,959
ZD/ONSHORE DISPOSAL: Loadings, Fluids	Conventionals	5,407,560	0	0	5,407,560
	Toxics + Non-conventionals	1,559,165	0	0	1,559,165
	Total Drilling Fluids	6,966,725	0	0	6,966,725
TOTAL ZD/ONSHORE DISPOSAL LOADINGS		11,301,684	0	0	11,301,684
	Onsite Injection	904,361	0	0	904,361
	Haul/Onshore Disposal	10,397,324	0	0	10,397,324
TOTAL ONSITE AND ZD/ONSHORE BASELINE WBF POLLUTANT LOADINGS		**87,462,923**	**0**	**0**	**87,462,923**

WORKSHEET M:
BAT 3 (WBF) New Sources - Upper Bound WBF Failure Rate (0%)

Summary of Total Baseline Water-Based Fluids Onsite Discharge and Zero Discharge/Onshore Disposal Loadings		GOM	CA	AK	Total
ONSITE DISCHARGE: Loadings, Cuttings	Conventionals	35,737,978	-	-	35,737,978
ONSITE DISCHARGE: Loadings, Fluids	Conventionals	42,850,026	-	-	42,850,026
	Toxics + Non-conventionals	10,497,919	-	-	10,497,919
	Total Drilling Fluids	53,347,945	-	-	53,347,945
TOTAL ONSITE DISCHARGE LOADINGS		89,085,922	-	-	89,085,922
ZD/ONSHORE DISPOSAL: Loadings, Cuttings	Conventionals	4,334,959	-	-	4,334,959
ZD/ONSHORE DISPOSAL: Loadings, Fluids	Conventionals	5,407,560	-	-	5,407,560
	Toxics + Non-conventionals	1,559,165	-	-	1,559,165
	Total Drilling Fluids	6,966,725	-	-	6,966,725
TOTAL ZD/ONSHORE DISPOSAL LOADINGS		11,301,684	-	-	11,301,684
	Onsite Injection	904,361	-	-	904,361
	Haul/Onshore Disposal	10,397,324	-	-	10,397,324
TOTAL ONSITE AND ZD/ONSHORE BASELINE WBF POLLUTANT LOADINGS		**100,387,607**	**-**	**-**	**100,387,607**

-	81,601,922	total toxic/non-conv: baseline	9,606,917	total conventionals: baseline		71,995,005
-	76,161,239	BAT 1 & 2	8,974,385	BAT 1 & 2		67,186,853
-	89,085,922	BAT 3	10,497,919	BAT 3		78,588,004
		Incr BAT 1 &2	(632,532)	Incr BAT 1 &2		(4,808,151)
		Incr BAT 3	891,002	Incr BAT 3		6,592,999

WORKSHEET BB: NEW SOURCE DRILLING FLUID DISPOSAL LOADINGS BY REGION, OPTION, FLUID TYPE, AND LOCATION

Gulf of Mexico -- Lower WBF Failure Rate

		Onsite Discharge	Zero Discharge Alternative Disposal Method: Onsite Injection	Haul/ Onshore Disposal	Total Media Pollutant Loadings	Onsite (marine) Discharges	Onshore Disposal	All Media Totals
Baseline								
	wbf	92,903,606	0	0	92,903,606			
	sbf	17,405,127	0	0	17,405,127			
	obf	0	0	1,256,728	1,256,728			
	total	110,308,733	0	1,256,728	111,565,461			
BAT 1								
	wbf	87,462,923	0	0	87,462,923			
	sbf	20,241,106	0	0	20,241,106			
	obf	0	0	628,364	628,364			
	total	107,704,029	0	628,364	108,332,393	-2,604,704	-628,364	(3,233,068)
BAT 2								
	wbf	87,462,923	0	0	87,462,923			
	sbf	19,722,488	0	518,618	20,241,106			
	obf	0	0	628,364	628,364			
	total	107,185,411	0	1,146,982	108,332,393	-3,123,322	-109,746	(3,233,068)
BAT 3								
	wbf	100,387,607	0	0	100,387,607			
	sbf	0	0	2,852,661	2,852,661			
	obf	0	879,710	11,125,935	12,005,645			
	total	100,387,607	879,710	13,978,597	115,245,913	-9,921,126	13,601,578	3,680,452

California -- Lower WBF Failure Rate

		Onsite Discharge	Zero Discharge Alternative Disposal Method: Onsite Injection	Haul/ Onshore Disposal	Total Media Pollutant Loadings	Onsite (marine) Discharges	Onshore Disposal	All Media Totals
Baseline								
	wbf							
	sbf							
	obf							
	total							
BAT 1								
	wbf							
	sbf							
	obf							
	total					0	0	-
BAT 2								
	wbf							
	sbf							
	obf							
	total					0	0	-
BAT 3								
	wbf							
	sbf							
	obf							
	total					0	0	-

Cook Inlet, AK -- Lower WBF Failure Rate

		Onsite Discharge	Zero Discharge Alternative Disposal Method		Total Media Pollutant Loadings	Onsite (marine) Discharges	Onshore Disposal	All Media Totals
			Onsite Injection	Haul/ Onshore Disposa				
Baseline								
	wbf							
	sbf							
	obf							
	total							
BAT 1								
	wbf							
	sbf							
	obf							
	total					0	0	-
BAT 2								
	wbf							
	sbf							
	obf							
	total					0	0	-
BAT 3								
	wbf							
	sbf							
	obf							
	total					0	0	-

Total -- Lower WBF Failure Rate

		Onsite Discharge	Zero Discharge Alternative Disposal Method		Total Media Pollutant Loadings	Onsite (marine) Discharges	Onshore Disposal	All Media Totals
			Onsite Injection	Haul/ Onshore Disposa				
Baseline								
	wbf	92,903,606	0	0	92,903,606			
	sbf	17,405,127	0	0	17,405,127			
	obf	0	0	1,256,728	1,256,728			
	total	110,308,733	0	1,256,728	111,565,461			
BAT 1								
	wbf	87,462,923	0	0	87,462,923			
	sbf	20,241,106	0	0	20,241,106			
	obf	0	0	628,364	628,364			
	total	107,704,029	0	628,364	108,332,393	-2,604,704	-628,364	(3,233,068)
BAT 2								
	wbf	87,462,923	0	0	87,462,923			
	sbf	19,722,488	0	518,618	20,241,106			
	obf	0	0	628,364	628,364			
	total	107,185,411	0	1,146,982	108,332,393	-3,123,322	-109,746	(3,233,068)
BAT 3								
	wbf	100,387,607	0	0	100,387,607			
	sbf	0	0	2,852,661	2,852,661			
	obf	0	879,710	11,125,935	12,005,645			
	total	100,387,607	879,710	13,978,597	115,245,913	-9,921,126	13,601,578	3,680,452

INCREMENTAL LOADINGS (REDUCTIONS) **Lower WBF Failure Rate, New Sources**

		Onsite Discharge	Zero Discharge Alternative Disposal Method		Total Media Pollutant Loadings
			Onsite Injection	Haul/ Onshore Disposa	
Baseline					
	wbf				
	sbf				
	obf				
	total				
BAT 1					
	wbf	-5,440,683	0	0	-5,440,683
	sbf	2,835,979	0	0	2,835,979
	obf	0	0	-628,364	-628,364
	total	-2,604,704	0	-628,364	-3,233,068
BAT 2					
	wbf	-5,440,683	0	0	-5,440,683
	sbf	2,317,361	0	518,618	2,835,979
	obf	0	0	-628,364	-628,364
	total	-3,123,322	0	-109,746	-3,233,068
BAT 3					
	wbf	7,484,001	0	0	7,484,001
	sbf	-17,405,127	0	2,852,661	-14,552,466
	obf	0	879,710	9,869,207	10,748,917
	total	-9,921,126	879,710	12,721,869	3,680,452

SUMMARY TOTAL LOADINGS (REDUCTIONS): **Lower WBF Failure Rate, New Sources**

		Onsite Discharge	Zero Discharge Alternative Disposal Method		Total Media Pollutant Loadings
			Onsite Injection	Haul/ Onshore Disposa	
Baseline	total	110,308,733	0	1,256,728	111,565,461
BAT 1	total	107,704,029	0	628,364	108,332,393
BAT 2	total	107,185,411	0	1,146,982	108,332,393
BAT 3	total	100,387,607	879,710	13,978,597	115,245,913

SUMMARY INCREMENTAL LOADINGS (REDUCTIONS): **Lower WBF Failure Rate, New Sources**

		Onsite Discharge	Zero Discharge Alternative Disposal Method		Total Media Pollutant Loadings
			Onsite Injection	Haul/ Onshore Disposa	
Baseline		NA	NA	NA	NA
BAT 1	total	-2,604,704	0	-628,364	-3,233,068
BAT 2	total	-3,123,322	0	-109,746	-3,233,068
BAT 3	total	-9,921,126	879,710	12,721,869	3,680,452

WORKSHEET CC: NEW AND EXISTING SOURCE DRILLING FLUID DISPOSAL LOADINGS BY REGION, OPTION, FLUID TYPE, AND LOCATION

Gulf of Mexico -- Lower WBF Failure Rate

		Onsite Discharge	Zero Discharge Alternative Disposal Method		Total Media Pollutant Loadings			
			Onsite Injection	Haul/ Onshore Disposa		Onsite (marine) Discharges	Onshore Disposal	All Media Totals
Baseline								
	wbf	2,185,987,899	0	0	2,185,987,899			
	sbf	255,295,955	0	0	255,295,955			
	obf	0	11,862,178	48,705,439	60,567,617			
	total	2,441,283,854	11,862,178	48,705,439	2,501,851,471			
BAT 1								
	wbf	2,050,964,806	0	0	2,050,964,806			
	sbf	279,869,420	0	0	279,869,420			
	obf	0	7,092,172	28,997,053	36,089,225			
	total	2,330,834,226	7,092,172	28,997,053	2,366,923,451	-110,449,628	-24,478,392	(134,928,020)
BAT 2								
	wbf	2,050,964,806	0	0	2,050,964,806			
	sbf	271,789,237	0	8,080,183	279,869,420			
	obf	0	7,092,172	28,997,053	36,089,225			
	total	2,322,754,043	7,092,172	37,077,236	2,366,923,451	-118,529,811	-16,398,209	(134,928,020)
BAT 3								
	wbf	2,244,509,591	0	0	2,244,509,591			
	sbf	0	0	22,618,880	22,618,880			
	obf	0	36,980,946	215,992,842	252,973,788			
	total	2,244,509,591	36,980,946	238,611,723	2,520,102,259	-196,774,263	215,025,051	18,250,789

California -- Lower WBF Failure Rate

		Onsite Discharge	Zero Discharge Alternative Disposal Method		Total Media Pollutant Loadings			
			Onsite Injection	Haul/ Onshore Disposa		Onsite (marine) Discharges	Onshore Disposal	All Media Totals
Baseline								
	wbf	9,617,040	0	0	9,617,040			
	sbf	0	0	0	0			
	obf	0	1,945,148	0	1,945,148			
	total	9,617,040	1,945,148	0	11,562,188			
BAT 1								
	wbf	9,617,040	0	0	9,617,040			
	sbf	0	0	0	0			
	obf	0	1,945,148	0	1,945,148			
	total	9,617,040	1,945,148	0	11,562,188	0	0	-
BAT 2								
	wbf	9,617,040	0	0	9,617,040			
	sbf	0	0	0	0			
	obf	0	1,945,148	0	1,945,148			
	total	9,617,040	1,945,148	0	11,562,188	0	0	-
BAT 3								
	wbf	9,617,040	0	0	9,617,040			
	sbf	0	0	0	0			
	obf	0	1,945,148	0	1,945,148			
	total	9,617,040	1,945,148	0	11,562,188	0	0	-

Alaska -- lower WBF Failure Rate

		Onsite Discharge	Zero Discharge Alternative Disposal Method Onsite Injection	Haul/ Onshore Disposa	Total Media Pollutant Loadings	Onsite (marine) Discharges	Onshore Disposal	All Media Totals
Baseline								
	wbf	8,407,772	0	0	8,407,772			
	sbf	0	0	0	0			
	obf	0	1,945,148	0	1,945,148			
	total	8,407,772	1,945,148	0	10,352,920			
BAT 1								
	wbf	8,407,772	0	0	8,407,772			
	sbf	552,796	0	0	552,796			
	obf	0	1,316,784	0	1,316,784			
	total	8,960,568	1,316,784	0	10,277,352	552,796	-628,364	(75,568)
BAT 2								
	wbf	8,407,772	0	0	8,407,772			
	sbf	536,696	16,100	0	552,796			
	obf	0	1,316,784	0	1,316,784			
	total	8,944,468	1,332,884	0	10,277,352	536,696	-612,264	(75,568)
BAT 3								
	wbf	8,407,772	0	0	8,407,772			
	sbf	0	0	0	0			
	obf	0	1,945,148	0	1,945,148			
	total	8,407,772	1,945,148	0	10,352,920	0	0	-

TOTAL -- Lower Failure Rate

		Onsite Discharge	Zero Discharge Alternative Disposal Method Onsite Injection	Haul/ Onshore Disposa	Total Media Pollutant Loadings	Onsite (marine) Discharges	Onshore Disposal	All Media Totals
Baseline								
	wbf	2,204,012,710	0	0	2,204,012,710			
	sbf	255,295,955	0	0	255,295,955			
	obf	0	15,752,474	48,705,439	64,457,913			
	total	2,459,308,665	15,752,474	48,705,439	2,523,766,578			
BAT 1								
	wbf	2,068,989,617	0	0	2,068,989,617			
	sbf	280,422,216	0	0	280,422,216			
	obf	0	10,354,104	28,997,053	39,351,157			
	total	2,349,411,833	10,354,104	28,997,053	2,388,762,990	-109,896,832	-25,106,756	(135,003,588)
BAT 2								
	wbf	2,068,989,617	0	0	2,068,989,617			
	sbf	272,325,933	16,100	8,080,183	280,422,216			
	obf	0	10,354,104	28,997,053	39,351,157			
	total	2,341,315,550	10,370,204	37,077,236	2,388,762,990	-117,993,115	-17,010,473	(135,003,588)
BAT 3								
	wbf	2,262,534,402	0	0	2,262,534,402			
	sbf	0	0	22,618,880	22,618,880			
	obf	0	40,871,242	215,992,842	256,864,084			
	total	2,262,534,402	40,871,242	238,611,723	2,542,017,367	-196,774,263	215,025,051	18,250,789

INCREMENTAL LOADINGS (REDUCTIONS) **ALL SOURCES, Lower WBF Failure Rate**

		Onsite Discharge	Zero Discharge Alternative Disposal Method Onsite Injection	haul/ Onshore Disposa	Total Media Pollutant Loadings
Baseline					
	wbf				
	sbf				
	obf				
	total				
BAT 1					
	wbf	-135,023,093	0	0	-135,023,093
	sbf	25,126,261	0	0	25,126,261
	obf	0	-5,398,370	-19,708,386	-25,106,756
	total	-109,896,832	-5,398,370	-19,708,386	-135,003,588
BAT 2					
	wbf	-135,023,093	0	0	-135,023,093
	sbf	17,029,978	16,100	8,080,183	25,126,261
	obf	0	-5,398,370	-19,708,386	-25,106,756
	total	-117,993,115	-5,382,270	-11,628,203	-135,003,588
BAT 3					
	wbf	58,521,692	0	0	58,521,692
	sbf	-255,295,955	0	22,618,880	-232,677,075
	obf	0	25,118,768	167,287,403	192,406,171
	total	-196,774,263	25,118,768	189,906,284	18,250,789

SUMMARY TOTAL LOADINGS (REDUCTIONS) **ALL SOURCES, Lower WBF Failure Rate**

		Onsite Discharge	Zero Discharge Alternative Disposal Method Onsite Injection	haul/ Onshore Disposa	Total Media Pollutant Loadings
Baseline	total	2,459,308,665	15,752,474	48,705,439	2,523,766,578
BAT 1	total	2,349,411,833	10,354,104	28,997,053	2,388,762,990
BAT 2	total	2,341,315,550	10,370,204	37,077,236	2,388,762,990
BAT 3	total	2,262,534,402	40,871,242	238,611,723	2,542,017,367

SUMMARY INCREMENTAL LOADINGS (REDUCTIONS) **ALL SOURCES, Lower WBF Failure Rate**

		Onsite Discharge	Zero Discharge Alternative Disposal Method Onsite Injection	haul/ Onshore Disposa	Total Media Pollutant Loadings
Baseline		NA	NA	NA	NA
BAT 1	total	-109,896,832	-5,398,370	-19,708,386	-135,003,588
BAT 2	total	-117,993,115	-5,382,270	-11,628,203	-135,003,588
BAT 3	total	-196,774,263	25,118,768	189,906,284	18,250,789

SBF Drilling Waste Pollutant Concentrations

Pollutant Name	Average Concentration of Pollutants in Drilling Waste		Reference
Conventional Pollutants		**lbs/bbl-drilling fluid**	
Total Oil as SBF Basefluid		190.491	Derived from SBF
Total Oil as Formation Oil		0.588	formulation and densities
Total Oil (SBF Basefluid + Form. Oil)		191.079	(see "Model Well Input
TSS as barite		133.749	Data" worksheet) **
Priority Pollutant Organics	**mg/ml ***	**lbs/bbl-drilling fluid**	
Naphthalene	1.43	0.0010024	Calculated from diesel
Fluorene	0.78	0.0005468	oil composition in
Phenanthrene	1.85	0.0012968	Offshore Dev. Doc.,
Phenol (ug/g)	6	0.000003528	Table VII-9 **
Priority Pollutants, Metals	**mg/kg-barite**	**lbs/lb-dry SBF *****	
Cadmium	1.1	0.0000011	Offshore Dev. Doc.,
Mercury	0.1	0.0000001	Table XI-6
Antimony	5.7	0.0000057	
Arsenic	7.1	0.0000071	
Berylium	0.7	0.0000007	
Chromium	240.0	0.0002400	
Copper	18.7	0.0000187	
Lead	35.1	0.0000351	
Nickel	13.5	0.0000135	
Selenium	1.1	0.0000011	
Silver	0.7	0.0000007	
Thallium	1.2	0.0000012	
Zinc	200.5	0.0002005	
Non-Conventional Pollutants	**mg/kg-barite**	**lbs/lb-dry SBF *****	
Aluminum	9,069.9	0.0090699	Offshore Dev. Doc.,
Barium ****	588,000	0.5880000	Table XI-6
Iron	15,344.3	0.0153443	
Tin	14.6	0.0000146	
Titanium	87.5	0.0000875	
	mg/ml *	**lbs/bbl-drilling fluid**	
Alkylated benzenes	8.05	0.0056429	Calculated from diesel
Alkylated naphthalenes	75.68	0.0530502	oil composition in
Alkylated fluorenes	9.11	0.0063859	Offshore Dev. Doc.,
Alkylated phenanthrenes	11.51	0.0080683	Table VII-9 **
Alkylated phenols (ug/g)	52.9	0.0000311	
Total biphenyls	14.96	0.0104867	
Total dibenzothiophenes (ug/g)	760	0.0004469	

* Except where noted
** Includes assumption of 0.2% formation oil contamination
*** The dry weight (lbs) of the barite component in a SBF is equivalent to the term "lb-dry SBF"
**** Barium is derived from assumptions list on Page XI-8, Offshore Dev. Doc.
[i.e. barite is pure barium sulfate ($BaSO_4$) and by molecular weights barium sulfate is 58.8% by weight barium]

WORKSHEET No. O:

Revised Drilling Fluid Well Counts, to include Water-base Fluid wells

(well counts reflect number of wells < USING > not hauling or discharging the mud types listed)

		Baseline	BAT 1	BAT 2	BAT 3
% OBF > SBF	GOM	0%	40%	40%	0%
	CA	20%	40%	40%	0%
	AK	20%	40%	40%	0%
% WBF > SBF	GOM	0%	6%	6%	0%
	CA	0%	6%	6%	0%
	AK	0%	6%	6%	0%

BASELINE

Existing Sources

SBF/OBF/WBF	Region	SWD	SWE	DWD	DWE	TOTALS	
WBF	Gulf of Mexico	511	298	12	36	857	
SBF	Gulf of Mexico	86	51	16	48	201	
OBF	Gulf of Mexico	42	25	0	0	67	1,125
WBF	Offshore California	3	2	0	0	5	
SBF	Offshore California	0	0	0	0	-	
OBF	Offshore California	1	1	0	0	2	7
WBF	Cook Inlet, Alaska	3	1	0	0	4	
SBF	Cook Inlet, Alaska	0	0	0	0	-	
OBF	Cook Inlet, Alaska	1	1	0	0	2	6
							1,138

New Sources

SBF/OBF/WBF	Region	SWD	SWE	DWD	DWE	TOTALS	
WBF	Gulf of Mexico	27	0	11	0	38	
SBF	Gulf of Mexico	5	0	15	0	20	
OBF	Gulf of Mexico	2	0	0	0	2	60
WBF	Offshore California	0	0	0	0	-	
SBF	Offshore California	0	0	0	0	-	
OBF	Offshore California	0	0	0	0	-	-
WBF	Cook Inlet, Alaska	0	0	0	0	-	
SBF	Cook Inlet, Alaska	0	0	0	0	-	
OBF	Cook Inlet, Alaska	0	0	0	0	-	-
Note: By definition "exploratory" wells are excluded from the "new sources" category							60
							1,198

BAT OPT 1

Existing Sources

SBF/OBF/WBF	Region	SWD	SWE	DWD	DWE	TOTALS	
WBF	Gulf of Mexico	479	279	11	34	803	
SBF	Gulf of Mexico	124	74	17	49	264	
OBF	Gulf of Mexico	25	15	0	0	40	1,107
WBF	Offshore California	3	2	0	0	5	
SBF	Offshore California	0	0	0	0	-	
OBF	Offshore California	1	1	0	0	2	7
WBF	Cook Inlet, Alaska	3	1	0	0	4	
SBF	Cook Inlet, Alaska	1	0	0	0	1	
OBF	Cook Inlet, Alaska	0	1	0	0	1	6
							1,120

New Sources

SBF/OBF/WBF	Region	SWD	SWE	DWD	DWE	TOTALS	
WBF	Gulf of Mexico	25	0	10	0	35	
SBF	Gulf of Mexico	8	0	16	0	24	
OBF	Gulf of Mexico	1	0	0	0	1	60
WBF	Offshore California	0	0	0	0	-	
SBF	Offshore California	0	0	0	0	-	
OBF	Offshore California	0	0	0	0	-	-
WBF	Cook Inlet, Alaska	0	0	0	0	-	
SBF	Cook Inlet, Alaska	0	0	0	0	-	
OBF	Cook Inlet, Alaska	0	0	0	0	-	-
Note: By definition "exploratory" wells are excluded from the "new sources" category							60
							1,180

BAT OPT 2

Existing Sources

SBF/OBF/WBF	Region	SWD	SWE	DWD	DWE	TOTALS	
WBF	Gulf of Mexico	479	279	11	34	803	
SBF	Gulf of Mexico	124	74	17	49	264	
OBF	Gulf of Mexico	25	15	0	0	40	1,107
WBF	Offshore California	3	2	0	0	5	
SBF	Offshore California	0	0	0	0	-	
OBF	Offshore California	1	1	0	0	2	7
WBF	Cook Inlet, Alaska	3	1	0	0	4	
SBF	Cook Inlet, Alaska	1	0	0	0	1	
OBF	Cook Inlet, Alaska	0	1	0	0	1	6
							1,120

New Sources

SBF/OBF/WBF	Region	SWD	SWE	DWD	DWE	TOTALS	
WBF	Gulf of Mexico	25	0	10	0	35	
SBF	Gulf of Mexico	8	0	16	0	24	
OBF	Gulf of Mexico	1	0	0	0	1	60
WBF	Offshore California	0	0	0	0	-	
SBF	Offshore California	0	0	0	0	-	
OBF	Offshore California	0	0	0	0	-	-
WBF	Cook Inlet, Alaska	0	0	0	0	-	
SBF	Cook Inlet, Alaska	0	0	0	0	-	
OBF	Cook Inlet, Alaska	0	0	0	0	-	-
Note: By definition "exploratory" wells are excluded from the "new sources" category							60
							1,180

BAT OPT 3

Existing Sources

SBF/OBF/WBF	Region	SWD	SWE	DWD	DWE	TOTALS	
WBF	Gulf of Mexico	511	298	17	51	877	
SBF	Gulf of Mexico	0	0	3	8	11	
OBF	Gulf of Mexico	128	76	8	25	237	1,125
WBF	Offshore California	3	2	0	0	5	
SBF	Offshore California	0	0	0	0	-	
OBF	Offshore California	1	1	0	0	2	7
WBF	Cook Inlet, Alaska	3	1	0	0	4	
SBF	Cook Inlet, Alaska	0	0	0	0	-	
OBF	Cook Inlet, Alaska	1	1	0	0	2	6
							1,138

New Sources

SBF/OBF/WBF	Region	SWD	SWE	DWD	DWE	TOTALS	
WBF	Gulf of Mexico	27	0	15	0	42	
SBF	Gulf of Mexico	0	0	3	0	3	
OBF	Gulf of Mexico	7	0	8	0	15	60
WBF	Offshore California	0	0	0	0	-	
SBF	Offshore California	0	0	0	0	-	
OBF	Offshore California	0	0	0	0	-	-
WBF	Cook Inlet, Alaska	0	0	0	0	-	
SBF	Cook Inlet, Alaska	0	0	0	0	-	
OBF	Cook Inlet, Alaska	0	0	0	0	-	-
Note: By definition "exploratory" wells are excluded from the "new sources" category							60
							1,198

WORKSHEET No. P:
Drilling Fluid Well Counts, including Water-base Fluids Wells

Background indicates data from L Henry response to CAJ questions

Background indicates well counts from EPA NODA; EPA counts are ignored. but %Dev & %Expl applied to industry data, which given only at shallow+deep level.

GULF OF MEXICO OPERATIONS	% Total Wells by DF-type	Wells	% DW Wells by DF-type	DWD	DWE	No. SW Wells Rem'g	SWD	SWE
Total Annual		1,127		48	76	1,003	645	358
% of SW wells				38.7%	61.3%		64.3%	35.7%
DF-type								
WBF	80%	902	25%	12	19	871	560	311
SBF	10%	113	75%	36	57	20	13	7
OBF	10%	112	0%	0	0	112	72	40

		% Total Wells:							
		Existing Sources:			50%	100%	95%	100%	
		New Sources:			50%	0%	5%	0%	
(new+existing sources)									
GM - Deep	**GM - Shal**	**Existing Sources:**	**BASELINE DISCHARGES**						
59	836	WBF			12	36	511	298	857 857
		WBF>SBF(a)			0	0	0	0	0
79	142	SBF			16	48	86	51	201 201
		OBF>SBF(a)			0	0	0	0	0
-	69	OBF(a)			0	0	42	25	67 67
138	1,047	WBF+OBF>SBF(a)			0	0	0	0	1,125
GM		**New Sources:**	**BASELINE DISCHARGES**						
59	836	WBF			11	0	27	0	38 38
		WBF>SBF(a)			0	0	0	0	0
79	142	SBF			15	0	5	0	20 20
		OBF>SBF(a)			0	0	0	0	0
0	69	OBF(a)			0	0	2	0	2 2
138	1,047	WBF+OBF>SBF(a)			0	0	0	0	60 1,185
		(a) Estimate represents OBF wells =		0%	assumed to convert to SBF under the baseline scenario, plus				
		an assumed	0%	conversion of WBF wells to SBF.					
		Adj't for welll red'n, enhanced directional drilling, WBF>SBF:			0	-1	-11	-6	
GM		**Existing Sources:**	**BAT OPT 1 DISCHARGES**						
		WBF			11	34	479	279	803 803
		WBF>SBF(b)			1	2	32	19	54
		SBF(b)			16	47	75	45	183 264
		OBF>SBF(b)			0	0	17	10	27
		OBF(b)			0	0	25	15	40 40
		WBF+OBF>SBF(b)			1	2	49	29	1,107
GM		**New Sources:**	**BAT OPT 1 DISCHARGES**						
		WBF			10	0	25	0	35 35
		WBF>SBF(b)			1	0	2	0	3
		SBF(b)			15	0	5	0	20 24
		OBF>SBF(b)			0	0	1	0	1
		OBF(b)			0	0	1	0	1 1
		WBF+OBF>SBF(b)			1	0	3	0	60 1,167
		(b) Estimate represents OBF wells =		40%	assumed to convert to SBF under any discharge options, plus				
		an assumed	6%	conversion of WBF wells to SBF.					
					28	84	639	374	
					28	84	639	374	
GM		**Existing Sources:**	**BAT OPT 2 DISCHARGES**						
		WBF			11	34	479	279	803 803
		WBF>SBF(b)			1	2	32	19	54
		SBF(b)			16	47	75	45	183 264
		OBF>SBF(b)			0	0	17	10	27
		OBF(b)			0	0	25	15	40 40
		WBF+OBF>SBF(b)			1	2	49	29	1,107
GM		**New Sources:**	**BAT OPT 2 DISCHARGES**						
		WBF			10	0	25	0	35 35
		WBF>SBF(b)			1	0	2	0	3
		SBF(b)			15	0	5	0	20 24
		OBF>SBF(b)			0	0	1	0	1
		OBF(b)			0	0	1	0	1 1
		WBF+OBF>SBF(b)			1	0	3	0	60 1,167
		(b) Estimate represents OBF wells =		40%	assumed to convert to SBF under any discharge options, plus				
		an assumed	6%	conversion of WBF wells to SBF.					
					28	84	639	374	
					28	84	639	374	
GM		**Existing Sources:**	**BAT OPT 3 (ZERO DISCHARGE)**						
	0.6	WBF			17	51	511	298	877 877
		WBF>SBF(c)			0	0	0	0	0
	0.1	SBF(c)			3	8	0	0	11 11
		OBF>SBF(c)			0	0	0	0	0
	0.3	OBF(c)			8	25	128	76	237 237
		WBF+OBF>SBF(c)			0	0	0	0	1,125
GM		**New Sources:**	**BAT OPT 3 (ZERO DISCHARGE)**						
	0.6	WBF			15	0	27	0	42 42
		WBF>SBF(c)			0	0	0	0	0
	0.1	SBF(c)			3	0	0	0	3 3
		OBF>SBF(c)			0	0	0	0	0
	0.3	OBF(c)			8	0	7	0	15 15
		WBF+OBF>SBF(c)			0	0	0	0	60 1,185
		(c) Estimate represents OBF wells =		0%	assumed to convert to SBF under zero discharge option, plus				
		an assumed	0%	0%					

Background indicates data from L Henry response to CAJ questions

CALIFORNIA OPERATIONS

	% Total Wells by DF-type	Wells	% DW Wells by DF-type	DWD	DWE	No. SW Wells Rem'g	SWD	SWE
Total Annual		26		15	0	11	11	0
WBF (d)				25.0%	25.0%		86.8%	86.8%
SBF (d)				0%	0%		0%	0%
OBF (d)				75.0%	75.0%		13.2%	13.2%

Background indicates well counts from EPA NODA; counts ignored but %s D & E applied to industry data given only at shallow+deep level.

CA - Deep	CA - Shal									
		Existing Sources:	**BASELINE DISCHARGES**							
0	5	WBF		0	0	3	2	5	5
		WBF>SBF(a)		0	0	0	0	0	
0	0	SBF		0	0	0	0	0	0
		OBF>SBF(a)		0	0	0	0	0	
0	2	OBF		0	0	1	1	2	2
0	7	WBF+OBF>SBF(a)		0	0	0	0	7	
CA		**New Sources:**	**BASELINE DISCHARGES (e)**						
		WBF		0	0	0	0	0	0
		WBF>SBF(a)		0	0	0	0	0	
		SBF		0	0	0	0	0	0
		OBF>SBF(a)		0	0	0	0	0	
		OBF		0	0	0	0	0	0
		WBF+OBF>SBF(a)		0	0	0	0	0	7

(a) Estimate represents OBF wells = 20% assumed to convert to SBF under the baseline scenario, plus an assumed 0% conversion of WBF wells to SBF.

(d) Currently, no SBF is used in California operations; estimated percentage of OBF+SBF usage for deep- and shallow-water wells are based on available Gulf of Mexico usage data.

(e) There are no new sources projected for California operations.

CA	**Existing Sources:**	**BAT OPT 1 DISCHARGES**						
	WBF		0	0	3	2	5	5
	WBF>SBF(b)		0	0	0	0	0	
	SBF(b)		0	0	0	0	0	0
	OBF>SBF(b)		0	0	0	0	0	
	OBF(b)		0	0	1	1	2	2
	WBF+OBF>SBF(b)		0	0	0	0	7	
CA	**New Sources:**	**BAT OPT 1 DISCHARGES**						
	WBF		0	0	0	0	0	0
	WBF>SBF(b)		0	0	0	0	0	
	SBF(b)		0	0	0	0	0	0
	OBF>SBF(b)		0	0	0	0	0	
	OBF(b)		0	0	0	0	0	0
	WBF+OBF>SBF(b)		0	0	0	0	0	7

(b) Estimate represents OBF wells = 40% assumed to convert to SBF under any discharge options, plus an assumed 6% conversion of WBF wells to SBF.

CA	**Existing Sources:**	**BAT OPT 2 DISCHARGES**						
	WBF		0	0	3	2	5	5
	WBF>SBF(b)		0	0	0	0	0	
	SBF(b)		0	0	0	0	0	0
	OBF>SBF(b)		0	0	0	0	0	
	OBF(b)		0	0	1	1	2	2
	WBF+OBF>SBF(b)		0	0	0	0	7	
CA	**New Sources:**	**BAT OPT 2 DISCHARGES**						
	WBF		0	0	0	0	0	0
	WBF>SBF(b)		0	0	0	0	0	
	SBF(b)		0	0	0	0	0	0
	OBF>SBF(b)		0	0	0	0	0	
	OBF(b)		0	0	0	0	0	0
	WBF+OBF>SBF(b)		0	0	0	0	0	7

(b) Estimate represents OBF wells = 40% assumed to convert to SBF under any discharge options, plus an assumed 6% conversion of WBF wells to SBF.

CA	**Existing Sources:**	**BAT OPT 3 (ZERO DISCHARGE)**						
	WBF		0	0	3	2	5	5
	WBF>SBF(c)		0	0	0	0	0	
	SBF(c)		0	0	0	0	0	0
	OBF>SBF(c)		0	0	0	0	0	
	OBF(c)		0	0	1	1	2	2
	WBF+OBF>SBF(c)		0	0	0	0	7	
CA	**New Sources:**	**BAT OPT 3 (ZERO DISCHARGE)**						
	WBF		0	0	0	0	0	0
	WBF>SBF(c)		0	0	0	0	0	
	SBF(c)		0	0	0	0	0	0
	OBF>SBF(c)		0	0	0	0	0	
	OBF(c)		0	0	0	0	0	0
	WBF+OBF>SBF(c)		0	0	0	0	0	7

(c) Estimate represents OBF wells = 0% assumed to convert to SBF under zero discharge option, plus an assumed 0% conversion of WBF wells to SBF.

Background indicates data from L Henry response to CAJ questions

ALASKA (COOK INLET) OPERATIONS

	% Total Wells by DF-type	Wells	% DW Wells by DF-type	DWD	DWE	No. SW Wells Rem'g	SWD	SWE
Total Annual		8		1	0	7	7	0
WBF (d)				25.0%	25.0%		86.8%	86.8%
SBF (d)				0%	0%		0%	0%
OBF (d)				75.0%	75.0%		13.2%	13.2%

Background indicates well counts from EPA NODA; counts ignored but %s D & E applied to industry data given only at shallow+deep level.

	AK - Deep	AK - Shal									
			Existing Sources:	**BASELINE DISCHARGES**							
	0	4	WBF			0	0	3	1	4	4
			WBF>SBF(a)			0	0	0	0	0	
	0	0	SBF			0	0	0	0	0	0
			OBF>SBF(a)			0	0	0	0	0	
	0	2	OBF			0	0	1	1	2	2
	0	6	WBF+OBF>SBF(a)			0	0	0	0	6	
AK			**New Sources:**	**BASELINE DISCHARGES (e)**							
			WBF			0	0	0	0	0	0
			WBF>SBF(a)			0	0	0	0	0	
			SBF			0	0	0	0	0	0
			OBF>SBF(a)			0	0	0	0	0	
			OBF			0	0	0	0	0	0
			WBF+OBF>SBF(a)			0	0	0	0	0	6

(a) Estimate represents OBF wells = 20% assumed to convert to SBF under the baseline scenario, plus an assumed 0% conversion of WBF wells to SBF.

(d) Currently, no SBF is used in Cook Inlet operations; estimated percentage of OBF+SBF usage for deep- and shallow-water wells are based on available Gulf of Mexico usage data.

(e) There are no new sources projected for Cook Inlet operations.

AK	**Existing Sources:**	**BAT OPT 1 DISCHARGES**							
	WBF		0	0	3	1	4	4
	WBF>SBF(b)		0	0	0	0	0	
	SBF(b)		0	0	0	0	0	1
	OBF>SBF(b)		0	0	1	0	1	
	OBF(b)		0	0	0	1	1	1
	WBF+OBF>SBF(b)		0	0	1	0	6	
AK	**New Sources:**	**BAT OPT 1 DISCHARGES**						
	WBF		0	0	0	0	0	0
	WBF>SBF(b)		0	0	0	0	0	
	SBF(b)		0	0	0	0	0	0
	OBF>SBF(b)		0	0	0	0	0	
	OBF(b)		0	0	0	0	0	0
	WBF+OBF>SBF(b)		0	0	0	0	0	6

(b) Estimate represents OBF wells = 40% assumed to convert to SBF under any discharge options, plus an assumed 6% conversion of WBF wells to SBF.

AK	**Existing Sources:**	**BAT OPT 2 DISCHARGES**							
	WBF		0	0	3	1	4	4
	WBF>SBF(b)		0	0	0	0	0	
	SBF(b)		0	0	0	0	0	1
	OBF>SBF(b)		0	0	1	0	1	
	OBF(b)		0	0	0	1	1	1
	WBF+OBF>SBF(b)		0	0	1	0	6	
AK	**New Sources:**	**BAT OPT 2 DISCHARGES**						
	WBF		0	0	0	0	0	0
	WBF>SBF(b)		0	0	0	0	0	
	SBF(b)		0	0	0	0	0	0
	OBF>SBF(b)		0	0	0	0	0	
	OBF(b)		0	0	0	0	0	0
	WBF+OBF>SBF(b)		0	0	0	0	0	6

(b) Estimate represents OBF wells = 40% assumed to convert to SBF under any discharge options, plus an assumed 6% conversion of WBF wells to SBF.

	Existing Sources:	**BAT OPT 3 (ZERO DISCHARGE)**							
AK	WBF		0	0	3	1	4	4
	WBF>SBF(c)		0	0	0	0	0	
	SBF(c)		0	0	0	0	0	0
	OBF>SBF(c)		0	0	0	0	0	
	OBF(c)		0	0	1	1	2	2
	WBF+OBF>SBF(c)		0	0	0	0	6	
	New Sources:	**BAT OPT 3 (ZERO DISCHARGE)**						
AK	WBF		0	0	0	0	0	0
	WBF>SBF(c)		0	0	0	0	0	
	SBF(c)		0	0	0	0	0	0
	OBF>SBF(c)		0	0	0	0	0	
	OBF(c)		0	0	0	0	0	0
	WBF+OBF>SBF(c)		0	0	0	0	0	6

(c) Estimate represents OBF wells = 0% assumed to convert to SBF under zero discharge option, plus an assumed 0% conversion of WBF wells to SBF.

WORKSHEET Q:
Gulf of Mexico Regional Annual Total SBF Pollutant Loadings (lbs)
Existing Sources

Baseline Annual Total Pollutant Loadings Summary

Baseline Technology	Shallow Water (<1,000 ft)		Deep Water (>1,000 ft)		Total	Notes
	Development	Exploratory	Development	Exploratory		
Discharge w/10.2% retention	54,039,305	67,155,986	15,214,194	101,481,343	237,890,828	Total Wells = 201 SBF wells (from worksheet Well Count Input Data)
Zero Discharge of OBF-wastes	0	0	0	0	0	Total Wells = 67 OBF wells (from worksheet Well Count Input Data)

BAT Annual Total Pollutant Loadings Summary

BAT/NSPS Technology Option *	Shallow Water (<1,000 ft)		Deep Water (>1,000 ft)		Total	Notes
	Development	Exploratory	Development	Exploratory		
BAT/NSPS Option 1 (Discharge w/4.03% retention)	68,546,728	85,723,524	14,221,049	91,137,013	259,628,314	Total Wells = 201 SBF wells + 67 OBF wells (from worksheet Well Count Input Data)
BAT/NSPS Option 2 (Discharge w/3.82% retention)	66,550,333	83,226,863	13,806,867	88,482,686	252,066,749	Total Wells = 201 SBF wells + 67 OBF wells (from worksheet Well Count Input Data)
Zero Discharge of SBF-wastes	0	0	0	0	0	Total Wells = 201 SBF wells (from worksheet Well Count Input Data)

* EPA assumes that operators will switch from OBF to SBF under both BAT/NSPS discharge options

Incremental Annual Total Pollutant Loadings (Reductions) Summary **

Technology Option	Shallow Water (<1,000 ft)		Deep Water (>1,000 ft)		Total	Notes
	Development	Exploratory	Development	Exploratory		
Discharge w/10.2% retention	0	0	0	0	0	No reduction between baseline and current practice
BAT/NSPS Option 1 (Discharge w/4.03% retention)	14,507,423	18,567,538	(993,145)	(10,344,330)	21,737,486	Difference between BAT Option 1 loadings and baseline loadings (negative incremental loadings indicate reductions)
BAT/NSPS Option 2 (Discharge w/3.82% retention)	12,511,029	16,070,877	(1,407,327)	(12,998,657)	14,175,921	Difference between BAT Option 2 loadings and baseline loadings (negative incremental loadings indicate reductions)
Zero Discharge of SBF-wastes	(54,039,305)	(67,155,986)	(15,214,194)	(101,481,343)	(237,890,828)	Difference between zero discharge BAT loadings and baseline 10.20% discharge loadings from the 201 wells currently using SBF (negative incremental loadings indicate reductions)

** Incremental Loadings (Reductions) = Technology Option Loadings - Baseline Loadings.

California Offshore Regional Annual Total SBF Pollutant Loadings Summary (lbs)
Existing Sources

Baseline Annual Total Pollutant Loadings Summary

Baseline Technology	Shallow Water (<1,000 ft)		Deep Water (>1,000 ft)		Total	Notes
	Development	Exploratory	Development	Exploratory		
Zero Discharge of SBF & OBF-wastes (Current Practice)	0	0	0	0	0	Total Wells = 0 SBF wells (from worksheet Well Count Input Data)

BAT Annual Total Pollutant Loadings Summary

BAT/NSPS Technology Option *	Shallow Water (<1,000 ft)		Deep Water (>1,000 ft)		Total	Notes
	Development	Exploratory	Development	Exploratory		
BAT/NSPS Option 1 (Discharge w/4.03% retention)	0	0	0	0	0	Total Wells = 0 SBF wells + 2 OBF wells (from worksheet Well Count Input Data)
BAT/NSPS Option 2 (Discharge w/3.82% retention)	0	0	0	0	0	Total Wells = 0 SBF wells + 2 OBF wells (from worksheet Well Count Input Data)
Zero Discharge of SBF-wastes	0	0	0	0	0	Total Wells = 0 SBF wells (from worksheet Well Count Input Data)

* EPA assumes that operators will switch from OBF to SBF under both BAT/NSPS discharge options

Incremental Annual Total Pollutant Loadings (Reductions) Summary **

Technology Option	Shallow Water (<1,000 ft)		Deep Water (>1,000 ft)		Total	Notes
	Development	Exploratory	Development	Exploratory		
Zero Discharge of SBF & OBF-wastes (Current Practice)	0	0	0	0	0	No reduction between baseline and current practice
BAT/NSPS Option 1 (Discharge w/4.03% retention)	0	0	0	0	0	Difference between BAT Option 1 loadings and baseline loadings (negative incremental loadings indicate reductions)
BAT/NSPS Option 2 (Discharge w/3.82% retention)	0	0	0	0	0	Difference between BAT Option 2 loadings and baseline loadings (negative incremental loadings indicate reductions)
Zero Discharge of SBF-wastes	0	0	0	0	0	Difference between zero discharge BAT loadings and baseline zero discharge loadings from the 0 wells currently using SBF (negative incremental loadings indicate reductions)

** Incremental Loadings (Reductions) = Technology Option Loadings - Baseline Loadings.

Cook Inlet, Alaska, Regional Annual Total SBF Pollutant Loadings Summary (lbs)
Existing Sources

Baseline Annual Total Pollutant Loadings Summary

Baseline Technology	Shallow Water (<1,000 ft)		Deep Water (>1,000 ft)		Total	Notes
	Development	Exploratory	Development	Exploratory		
Zero Discharge of SBF & OBF-wastes (Current Practice)	0	0	0	0	0	Total Well(s) = 4 SBF well(s) (from worksheet Well Count Input Data)

BAT Annual Total Pollutant Loadings Summary

BAT/NSPS Technology Option *	Shallow Water (<1,000 ft)		Deep Water (>1,000 ft)		Total	Notes
	Development	Exploratory	Development	Exploratory		
BAT/NSPS Option 1 (Discharge w/4.03% retention)	552,796	0	0	0	552,796	Total Well(s) = 4 SBF well(s) + 2 OBF well(s) (from worksheet Well Count Input Data)
BAT/NSPS Option 2 (Discharge w/3.82% retention)	536,696	0	0	0	536,696	Total Well(s) = 4 SBF well(s) + 2 OBF well(s) (from worksheet Well Count Input Data)
Zero Discharge of SBF-wastes	0	0	0	0	0	Total Well(s) = 4 SBF well(s) (from worksheet Well Count Input Data)

* EPA assumes that operators will switch from OBF to SBF under both BAT/NSPS discharge options

Incremental Annual Total Pollutant Loadings (Reductions) Summary **

Technology Option	Shallow Water (<1,000 ft)		Deep Water (>1,000 ft)		Total	Notes
	Development	Exploratory	Development	Exploratory		
Zero Discharge of SBF & OBF-wastes (Current Practice)	0	0	0	0	0	No reduction between baseline and current practice
BAT/NSPS Option 1 (Discharge w/4.03% retention)	552,796	0	0	0	552,796	Difference between BAT Option 1 loadings and baseline loadings (negative incremental loadings indicate reductions)
BAT/NSPS Option 2 (Discharge w/3.82% retention)	536,696	0	0	0	536,696	Difference between BAT Option 2 loadings and baseline loadings (negative incremental loadings indicate reductions)
Zero Discharge of SBF-wastes	0	0	0	0	0	Difference between zero discharge BAT loadings and baseline zero discharge loadings from the 4 well(s) currently using SBF (negative incremental loadings indicate reductions)

** Incremental Loadings (Reductions) = Technology Option Loadings - Baseline Loadings.

Summary Pollutant Loadings (Reductions) for Management of SBF Cuttings, Existing Sources (lbs)

Total Annual Baseline Pollutant Loadings

Baseline Technology	Gulf of Mexico	Offshore California	Cook Inlet, Alaska		Total	Notes
Discharge w/10.2% retention	237,890,828	N/A	N/A		237,890,828	Total Wells = 201 GOM SBF wells
Zero Discharge of OBF-wastes	0	0	0		0	Total Wells = 67 GOM OBF wells + 0 CA SBF wells + 2 CA OBF wells + 4 AK SBF well(s) + 2 AK OBF wells
Total	237,890,828	0	0		237,890,828	Total Wells = 201 GOM SBF wells + 67 GOM OBF wells + 0 CA SBF wells + 2 CA OBF wells + 4 AK SBF well(s) + 2 AK OBF wells

N/A - Not Applicable (as these regions currently do not allow SBF discharges)

Total Annual Compliance Pollutant Loadings

Technology Option	Gulf of Mexico	Offshore California	Cook Inlet, Alaska		Total	Notes *
Current Practice	237,890,828	0	0		237,890,828	Total Wells = 201 GOM SBF wells + 67 GOM OBF wells + 0 CA SBF wells + 2 CA OBF wells + 4 AK SBF well(s) + 2 AK OBF wells
BAT/NSPS Option 1 (Discharge w/4.03% retention)	259,628,314	0	552,796		260,181,110	Total Wells = 201 GOM SBF wells + 67 GOM OBF wells + 0 CA SBF wells + 2 CA OBF wells + 4 AK SBF well(s) + 2 AK OBF wells
BAT/NSPS Option 2 (Discharge w/3.82% retention)	252,066,749	0	536,696		252,603,445	Total Wells = 201 GOM SBF wells + 67 GOM OBF wells + 0 CA SBF wells + 2 CA OBF wells + 4 AK SBF well(s) + 2 AK OBF wells
Zero Discharge of SBF-wastes	0	0	0		0	Total Wells = 201 GOM SBF wells

* EPA assumes that operators will switch from OBF to SBF under both BAT/NSPS discharge options
N/A - Not Applicable (as these regions currently do not allow SBF discharges)

Total Annual Incremental Pollutant Loadings (Reductions)

Technology Option	Gulf of Mexico	Offshore California	Cook Inlet, Alaska		Total	Notes
Current Practice	0	0	0		0	Total Wells = 201 GOM SBF wells + 67 GOM OBF wells + 0 CA SBF wells + 2 CA OBF wells + 4 AK SBF well(s) + 2 AK OBF wells
BAT/NSPS Option 1 (Discharge w/4.03% retention)	21,737,486	0	552,796		22,290,282	Total Wells = 201 GOM SBF wells + 67 GOM OBF wells + 0 CA SBF wells + 2 CA OBF wells + 4 AK SBF well(s) + 2 AK OBF wells
BAT/NSPS Option 2 (Discharge w/3.82% retention)	14,175,921	0	536,696		14,712,617	Total Wells = 201 GOM SBF wells + 67 GOM OBF wells + 0 CA SBF wells + 2 CA OBF wells + 4 AK SBF well(s) + 2 AK OBF wells
Zero Discharge of SBF-wastes	(237,890,828)	N/A	N/A		(237,890,828)	Total Wells = 201 GOM SBF wells

N/A - Not Applicable (as these regions currently do not allow SBF discharges)

WORKSHEET R:

Summary Dry Drill Cuttings and SBF Pollutant Loadings (Reductions) for Management of SBF Cuttings, Existing Sources (lbs)

Total Annual Dry Drill Cuttings and SBF Baseline Pollutant Loadings

Baseline Technology	Gulf of Mexico		Offshore California		Cook Inlet, Alaska		Total	
	Dry Drill Cuttings	SBF	Dry Drill Cuttings	SBF	Dry Drill Cuttings	SBF	Dry Drill Cuttings	SBF
Discharge w/10.2% retention	194,650,820	43,240,008	N/A	N/A	N/A	N/A	194,650,820	43,240,008
Zero Discharge of OBF-wastes	0	0	0	0	0	0	0	0
Total	194,650,820	43,240,008	0	0	0	0	194,650,820	43,240,008

N/A - Not Applicable (as these regions currently do not allow SBF discharges)

Total Annual Dry Drill Cuttings and SBF Compliance Pollutant Loadings

Technology Option	Gulf of Mexico		Offshore California		Cook Inlet, Alaska		Total	
	Dry Drill Cuttings	SBF	Dry Drill Cuttings	SBF	Dry Drill Cuttings	SBF	Dry Drill Cuttings	SBF
Current Practice	194,650,820	43,240,008	0	0	0	0	194,650,820	43,240,008
BAT/NSPS Option 1 (Discharge w/4.03% retention)	243,181,120	16,447,194	1,591,590	(1,591,590)	4,211,480	(3,658,684)	248,984,190	11,196,920
BAT/NSPS Option 2 (Discharge w/3.82% retention)	237,038,491	15,028,258	1,551,387	(1,551,387)	4,105,100	(3,568,404)	242,694,978	9,908,467
Zero Discharge of SBF-wastes	0	0	N/A	N/A	N/A	N/A	0	0

* EPA assumes that operators will switch from OBF to SBF under both BAT/NSPS discharge options

N/A - Not Applicable (as these regions currently do not allow SBF discharges)

Total Annual Dry Drill Cuttings and SBF Incremental Pollutant Loadings (Reductions)

Current Practice	Gulf of Mexico		Offshore California		Cook Inlet, Alaska		Total	
	Dry Drill Cuttings	SBF	Dry Drill Cuttings	SBF	Dry Drill Cuttings	SBF	Dry Drill Cuttings	SBF
Current Practice	0	0	0	0	0	0	0	0
BAT/NSPS Option 1 (Discharge w/4.03% retention)	48,530,300	(26,792,814)	1,591,590	(1,591,590)	4,211,480	(3,658,684)	54,333,370	(32,043,088)
BAT/NSPS Option 2 (Discharge w/3.82% retention)	42,387,671	(28,211,749)	1,551,387	(1,551,387)	4,105,100	(3,568,404)	48,044,158	(33,331,541)
Zero Discharge of SBF-wastes	(194,650,820)	(43,240,008)	N/A	N/A	N/A	N/A	(194,650,820)	(43,240,008)

N/A - Not Applicable (as these regions currently do not allow SBF discharges)

WORKSHEET S:
Gulf of Mexico Regional Annual Total Pollutant Loadings Summary (lbs) from New Sources

Baseline Annual Total Pollutant Loadings Summary: SBF, New Source Onsite Discharges

\	Shallow Water (<1,000 ft)		Deep Water (>1,000 ft)			
Technology	Development	Exploratory	Development	Exploratory	Total	Notes
Discharge w/10.2% retention	3,141,820	0	14,263,307	0	17,405,127	Total Wells = 20 SBF wells (from worksheet Well Count Input Data)

BAT Annual Total Pollutant Loadings Summary: SBF, New Source Onsite Discharges

BAT/NSPS Technology	Shallow Water (<1,000 ft)		Deep Water (>1,000 ft)			
Option *	Development	Exploratory	Development	Exploratory	Total	Notes
BAT/NSPS Option 1 (Discharge w/4.03% retention)	5,026,912	0	15,214,194	0	20,241,106	Total Wells = 20 SBF wells (from worksheet Well Count Input Data)
BAT/NSPS Option 2 (Discharge w/3.82% retention)	4,898,112	0	14,824,376	0	19,722,488	Total Wells = 20 SBF wells (from worksheet Well Count Input Data)
Zero Discharge of SBF-wastes	0	0	0	0	0	Total Wells = 20 SBF wells (from worksheet Well Count Input Data)

Incremental Annual Total Pollutant Loadings (Reductions) Summary : SBF, New Sources* Onsite Discharges

Technology Option	Shallow Water (<1,000 ft)		Deep Water (>1,000 ft)			
	Development	Exploratory	Development	Exploratory	Total	Notes
Discharge w/10.2% retention	0	0	0	0	0	No reduction between baseline and current practice
BAT/NSPS Option 1 (Discharge w/4.03% retention)	1,885,092	0	950,887	0	2,835,979	Difference between NSPS Option 1 loadings and baseline loadings (negative incremental loadings indicate reductions)
BAT/NSPS Option 2 (Discharge w/3.82% retention)	1,756,292	0	561,069	0	2,317,361	Difference between NSPS Option 2 loadings and baseline loadings (negative incremental loadings indicate reductions)
Zero Discharge of SBF-wastes	(3,141,820)	0	(14,263,307)	0	(17,405,127)	Difference between zero discharge NSPS loadings and baseline 10.20% discharge loadings from the 20 wells expected to use SBF (negative incremental loadings indicate reductions)

** Incremental Loadings (Reductions) = Technology Option Loadings - Baseline Loadings.

WORKSHEET T:

Summary: New Sources

Baseline

	Shallow Water (<1,000 ft)		Deep Water (>1,000 ft)		
	Development	Exploratory	Development	Exploratory	Total
No. wells, SBF	5	0	15	0	20
Loadings/well (lbs)	628,364	1,316,784	950,887	2,114,195	
Total Loadings, Discharge	3,141,820	0	14,263,307	0	17,405,127
Total Wells, Zero Discharge	0	0	0	0	0
Onsite Injection (20%S: 0%D)	0	0	0	0	0
Onshore Disposal (80%S:100%D)	0	0	0	0	0
No. wells, OBF	2	0	0	0	2
Loadings/well (lbs)	628,364	1,316,784	950,887	2,114,195	
Total Loadings, Zero Discharge	1,256,728	0	0	0	1,256,728
Onsite Injection (20%S: 0%D)	0	0	0	0	0
Onshore Disposal (80%S:100%D)	1,256,728	0	0	0	1,256,728

Summary: New Sources
BAT 1

	Shallow Water (<1,000 ft)		Deep Water (>1,000 ft)		
	Development	Exploratory	Development	Exploratory	Total
No. wells, SBF	8	0	16	0	24
Loadings/well (lbs)	628,364	1,316,784	950,887	2,114,195	
Total Loadings, Discharge	5,026,912	0	15,214,194	0	20,241,106
Total Wells, Zero Discharge	0	0	0	0	0
Onsite Injection (20%S: 0%D)	0	0	0	0	0
Onshore Disposal (80%S:100%D)	0	0	0	0	0
No. wells, OBF	1	0	0	0	1
Loadings/well (lbs)	628,364	1,316,784	950,887	2,114,195	
Total Loadings, Zero Discharge	628,364	0	0	0	628,364
Onsite Injection (20%S: 0%D)	0	0	0	0	0
Onshore Disposal (80%S:100%D)	628,364	0	0	0	628,364

Summary: New Sources
BAT 2

	Shallow Water (<1,000 ft)		Deep Water (>1,000 ft)		
	Development	Exploratory	Development	Exploratory	Total
No. wells, SBF	8	0	16	0	24
Loadings/well (lbs)	16,100	33,739	24,364	54,170	
Total Wells, Zero Discharge	8	0	16	0	24
Onsite Injection (0%S: 0%D)	0	0	0	0	0
Onshore Disposal (100%S:100%D)	128,800	0	389,818	0	518,618
No. wells, OBF	1	0	0	0	1
Loadings/well (lbs)	628,364	1,316,784	950,887	2,114,195	
Total Loadings, Zero Discharge	628,364	0	0	0	628,364
Onsite Injection (20%S: 0%D)	0	0	0	0	0
Onshore Disposal (80%S:100%D)	628,364	0	0	0	628,364

	Shallow Water (<1,000 ft)		Deep Water (>1,000 ft)		
	Development	Exploratory	Development	Exploratory	Total
No. wells, SBF	8	0	16	0	24
Loadings/well (lbs)	612,264	1,283,045	926,523	2,060,025	
Total Loadings, Discharge	4,898,112	0	14,824,376	0	19,722,488

Summary: New Sources
BAT 3

	Shallow Water (<1,000 ft)		Deep Water (>1,000 ft)		
	Development	Exploratory	Development	Exploratory	Total
No. wells, SBF	0	0	3	0	3
Loadings/well (lbs)	628,364	1,316,784	950,887	2,114,195	
Total Loadings, Zero Discharge	0	0	2,852,661	0	2,852,661
Onsite Injection (20%S: 0%D)	0	0	0	0	0
Onshore Disposal (80%S:100%D)	0	0	2,852,661	0	2,852,661
No. wells, OBF	7	0	8	0	15
Loadings/well (lbs)	1,885,092	3,950,352	2,852,661	6,342,584	
Total Loadings, Zero Discharge	4,398,548	0	7,607,097	0	12,005,645
Onsite Injection (20%S: 0%D)	879,710	0	0	0	879,710
Onshore Disposal (80%S:100%D)	3,518,838	0	7,607,097	0	11,125,935

WORKSHEET No. W:
Summary Dry Drill Cuttings and SBF Pollutant Loadings (Reductions)
for Management of SBF Cuttings, New Sources (lbs)

Total Annual Dry Drill Cuttings and SBF Baseline Pollutant Loadings

Baseline Technology	Gulf of Mexico	
	Dry Drill Cuttings	SBF
Discharge w/10.2% retention	14,241,500	3,163,627

N/A - Not Applicable (as these regions currently do not allow SBF discharges)

Total Annual Dry Drill Cuttings and SBF Compliance Pollutant Loadings

Technology Option	Gulf of Mexico	
	Dry Drill Cuttings	SBF
Current Practice	14,241,500	3,163,627
BAT/NSPS Option 1 (Discharge w/4.03% retention)	14,241,500	5,999,606
BAT/NSPS Option 2 (Discharge w/3.82% retention)	13,881,767	5,840,721
Zero Discharge of SBF-wastes	0	0

* EPA assumes that operators will switch from OBF to SBF under both BAT/NSPS discharge options
N/A - Not Applicable (as these regions currently do not allow SBF discharges)

Total Annual Dry Drill Cuttings and SBF Incremental Pollutant Loadings (Reductions)

Current Practice	Gulf of Mexico	
	Dry Drill Cuttings	SBF
Current Practice	0	0
BAT/NSPS Option 1 (Discharge w/4.03% retention)	0	2,835,979
BAT/NSPS Option 2 (Discharge w/3.82% retention)	(359,733)	2,677,094
Zero Discharge of SBF-wastes	(14,241,500)	(3,163,627)

N/A - Not Applicable (as these regions currently do not allow SBF discharges)

APPENDIX IX-1

Non-Water Quality Environmental Impacts

Worksheet No. 1 **Page 1 of 5**

BPT Non-Water Quality Environmental Impacts: Baseline Current Practice

Region: Offshore Gulf of Mexico (GOM)

Technology: SBF Discharges from Baseline Solids Control System (e.g., Shale Shakers & Fines Removal Unit) at 10.20% CRN

Fuel-Consuming Activity	Diesel Fuel Consumed (gal/model well)				Note (All information below is detailed in EPA, 2000 unless otherwise noted.)
	Shallow Water		Deep Water		
	Development	Exploratory	Development	Exploratory	
Baseline Solids Control Equipment	748.8	1,569.6	1,137.6	2,520.0	Baseline equipment fuel usage is 6 gal-diesel/hr
TOTAL	748.8	1,569.6	1,137.6	2,520.0	

Energy-Consuming Activity	Energy Requirements (hp-hr/model well)				Note (All information below is detailed in EPA, 2000 unless otherwise noted.)
	Shallow Water		Deep Water		
	Development	Exploratory	Development	Exploratory	
Baseline Solids Control Equipment	8,424.0	17,658.0	12,798.0	28,350.0	Baseline equipment include: 4 x 5 hp primary shale shakers, 4 x 5 hp secondary shale shakers, and 1 x 27.5 hp fines removal unit (avg of 5 hp mud cleaner and 50 hp decanting centrifuge).
TOTAL	8,424.0	17,658.0	12,798.0	28,350.0	

BPT Non-Water Quality Environmental Impacts: Baseline Current Practice

Region: Offshore Gulf of Mexico (GOM)
Technology: SBF Discharges from Baseline Solids Control System (e.g., Shale Shakers & Fines Removal Unit) at 10.20% CRN

Baseline Solids Control Air Emissions (per model well) - Rig Fuel Type for Electricity Generation (Diesel)

Model Well	Air Emissions (short tons/model well)					
	NO_x	THC	SO_2	CO	TSP	Total
Shallow Water Development	0.1300	0.0104	0.0086	0.0281	0.0093	0.1865
Shallow Water Exploratory	0.2725	0.0218	0.0181	0.0590	0.0195	0.3909
Deep Water Development	0.1975	0.0158	0.0131	0.0427	0.0141	0.2833
Deep Water Exploratory	0.4375	0.0350	0.0291	0.0947	0.0313	0.6275

Baseline Solids Control Air Emissions (per model well) - Rig Fuel Type for Electricity Generation (Natural Gas)

Model Well	Air Emissions (short tons/model well)					
	NO_x	THC	SO_2	CO	TSP	Total
Shallow Water Development	0.0121	0.0017	0.0000	0.0077	0.0000	0.0215
Shallow Water Exploratory	0.0253	0.0035	0.0000	0.0162	0.0000	0.0450
Deep Water Development	0.0183	0.0025	0.0000	0.0117	0.0000	0.0326
Deep Water Exploratory	0.0406	0.0056	0.0001	0.0259	0.0000	0.0723

Average Baseline Solids Control Air Emissions (per model well) - Weighted by Rig Diesel/Natural Gas Percentage Fuel Split (85%/15%)

Model Well	Air Emissions (short tons/model well)					
	NO_x	THC	SO_2	CO	TSP	Total
Shallow Water Development	0.1123	0.0091	0.0074	0.0251	0.0079	0.1617
Shallow Water Exploratory	0.2354	0.0191	0.0154	0.0526	0.0165	0.3390
Deep Water Development	0.1706	0.0138	0.0112	0.0381	0.0120	0.2457
Deep Water Exploratory	0.3780	0.0306	0.0247	0.0844	0.0266	0.5442

Daily Drill Rig Emissions

Model Well	Air Emissions (short tons/model well)					
	NO_x	THC	SO_2	CO	TSP	Total
Shallow Water Development	3.1570	1.6954	0.2150	0.4525	0.2475	5.7674
Shallow Water Exploratory	3.1570	1.6954	0.2150	0.4525	0.2475	5.7674
Deep Water Development	3.1570	1.6954	0.2150	0.4525	0.2475	5.7674
Deep Water Exploratory	3.1570	1.6954	0.2150	0.4525	0.2475	5.7674
Total per day	**12.6280**	**6.7816**	**0.8598**	**1.8100**	**0.9900**	

Note: Drill rig emissions include impacts from all rig daily operations and one helicopter trip to and from the rig.

BPT Non-Water Quality Environmental Impacts: Baseline Current Practice

Region: Offshore Gulf of Mexico (GOM)

Technology: SBF Discharges from Baseline Solids Control System (e.g., Shale Shakers & Fines Removal Unit) at 10.20% CRN & Zero Discharge from OBF Wells (also at 10.20% CRN)

Air Emissions (SBF Baseline Model Well - Discharging at 10.20% CRN)

Model Well	Air Emissions (short tons/model well)					
	NO_x	THC	SO_2	CO	TSP	Total
Shallow Water Development	0.1123	0.0091	0.0074	0.0251	0.0079	0.1617
Shallow Water Exploratory	0.2354	0.0191	0.0154	0.0526	0.0165	0.3390
Deep Water Development	0.1706	0.0138	0.0112	0.0381	0.0120	0.2457
Deep Water Exploratory	0.3780	0.0306	0.0247	0.0844	0.0266	0.5442

Air Emissions (OBF Baseline Model Well - Zero Discharging at 10.20% CRN)

Model Well	Air Emissions (short tons/model well)					
	NOx	THC	SO2	CO	TSP	Total
Shallow Water Development	1.3055	0.5276	0.0904	0.2386	0.1033	2.2654
Shallow Water Exploratory	2.3187	0.9267	0.1591	0.4150	0.1813	4.0009
Deep Water Development	1.9402	0.8441	0.1340	0.3395	0.1537	3.4116
Deep Water Exploratory	4.3481	1.8858	0.3004	0.7592	0.3444	7.6379

Note: These air emissions are calculated in Worksheet No. 11

BPT Non-Water Quality Environmental Impacts: Baseline Current Practice

Region: Offshore Gulf of Mexico (GOM)

Technology: SBF Discharges from Baseline Solids Control System (e.g., Shale Shakers & Fines Removal Unit) at 10.20% CRN & Zero Discharge from OBF Wells (also at 10.20% CRN)

Annual Air Emissions (SBF Baseline Model Well - Discharging at 10.20% CRN)

Model Well	Air Emissions (short tons/model well)					
	NO_x	THC	SO_2	CO	TSP	Total
Shallow Water Development	1,421.4691	758.9647	96.7623	204.5141	111.3608	2,593.0710
Shallow Water Exploratory	1,766.9827	943.4447	120.2821	254.2250	138.4290	3,223.3636
Deep Water Development	401.7748	214.5195	27.3496	57.8054	31.4759	732.9253
Deep Water Exploratory	2,670.0225	1,425.6045	181.7539	384.1500	209.1750	4,870.7059
Total	6,260.2492	3,342.5334	426.1479	900.6946	490.4407	

Annual Air Emissions (OBF Baseline Model Well - Zero Discharging at 10.20% CRN)

Model Well	Air Emissions (short tons/model well)					
	NOx	THC	SO2	CO	TSP	Total
Shallow Water Development	744.3219	392.4343	50.7436	108.8490	58.3910	1,354.7398
Shallow Water Exploratory	918.2497	485.1648	62.5548	133.6807	71.9770	1,671.6271
Deep Water Development	0.0000	0.0000	0.0000	0.0000	0.0000	0.0000
Deep Water Exploratory	0.0000	0.0000	0.0000	0.0000	0.0000	0.0000
Total	1,662.5716	877.5992	113.2985	242.5297	130.3680	

Annual Air Emissions (WBF Baseline Model Well - Discharging at 10.20% CRN)

Model Well	Air Emissions (short tons/model well)					
	NO_x	THC	SO_2	CO	TSP	Total
Shallow Water Development	16,834.9516	9,014.6791	1,146.1398	2,417.5775	1,319.3473	30,732.6952
Shallow Water Exploratory	20,579.2901	11,019.6751	1,401.0580	2,955.2820	1,612.7893	37,568.0945
Deep Water Development	600.6147	321.6136	40.8904	86.2511	47.0699	1,096.4397
Deep Water Exploratory	3,991.4269	2,137.3054	271.7402	573.1875	312.8063	7,286.4662
Total	42,006.2833	22,493.2732	2,859.8284	6,032.2980	3,292.0127	

Note: Summary annual air emissions totals assume the following number of GOM SBF wells (existing sources) under this technology option: 86 SWD wells, 51 SWE wells, 16 DWD wells, and 48 DWE wells

Note: Summary annual air emissions totals assume the following number of GOM OBF wells (existing sources) will be subject to zero discharge under this technology option: 42 SWD wells, 25 SWE wells, 0 DWD wells, and 0 DWE wells

Note: Summary annual air emissions totals assume the following number of GOM WBF wells (existing sources) under this technology option: 511 SWD wells, 298 SWE wells, 12 DWD wells, and 36 DWE wells

Worksheet No. 1 **Page 5 of 5**

BPT Non-Water Quality Environmental Impacts: Baseline Current Practice

Region: Offshore Gulf of Mexico (GOM)

Technology: SBF Discharges from Baseline Solids Control System (e.g., Shale Shakers & Fines Removal Unit) at 10.20% CRN & Zero Discharge from OBF Wells (also at 10.20% CRN)

Summary Annual Fuel Usage

Model Well	SBF Wells			OBF Wells			Annual Fuel Usage	
	gallons per model well	Barrels of Oil Equivalent (BOE) per model well	BOE per model well per day	gallons per model well	Barrels of Oil Equivalent (BOE) per model well	BOE per model well per day	Gallons	Barrels of Oil Equivalent (BOE)
Shallow Water Development	748.8	17.8	3.4	6,550.7	156.0	30.0	339,524.8	8,083.9
Shallow Water Exploratory	1,569.6	37.4	3.4	11,546.7	274.9	25.2	368,718.2	8,779.0
Deep Water Development	1,137.6	27.1	3.4	9,797.9	233.3	29.5	18,201.6	433.4
Deep Water Exploratory	2,520.0	60.0	3.4	21,907.7	521.6	29.8	120,960.0	2,880.0
TOTAL	5,976.0	142.3	13.7	49,803.0	1,185.8	114.6	847,404.6	20,176.3

Daily Drill Rig Fuel Usage

Model Well	Gallons per model well	Barrels of Oil Equivalent (BOE) per model well
Shallow Water Development	15,388.0	366.4
Shallow Water Exploratory	15,388.0	366.4
Deep Water Development	15,388.0	366.4
Deep Water Exploratory	15,388.0	366.4
TOTAL	61,552.0	1,465.5

GOM Baseline Annual Emissions/Fuel Usage

Model Well	SBF (Discharge @ 10.2%)		OBF (Zero Discharge)		WBF (Discharge @ 10.2%)		WBF (Zero Discharge)	
	Total Air Emissions (tons)	Barrels of Oil Equivalent (BOE)	Total Air Emissions (tons)	Barrels of Oil Equivalent (BOE)	Total Air Emissions (tons)	Barrels of Oil Equivalent (BOE)	Total Air Emissions (tons)	Barrels of Oil Equivalent (BOE)
Shallow Water Development	2,593.0710	165,378.8	1,354.7398	86,568.3	30,815.3325	1,965,315.7	0.0000	0.0
Shallow Water Exploratory	3,223.3636	205,577.1	1,671.6271	106,711.9	37,669.1115	2,402,430.6	0.0000	0.0
Deep Water Development	732.9253	46,743.9	0.0000	0.0	1,099.3879	70,115.9	0.0000	0.0
Deep Water Exploratory	4,870.7059	310,640.0	0.0000	0.0	7,306.0588	465,960.0	0.0000	0.0
TOTAL	**11,420.1**	**728,339.9**	**3,026.4**	**193,280.1**	**76,889.9**	**4,903,822.2**	**0.0**	**0.0**
	88,310.0	5,632,162.1						

Note: Summary annual fuel usage totals assume the following number of GOM SBF wells (existing sources) under this technology option: 86 SWD wells, 51 SWE wells, 16 DWD wells, and 48 DWE wells

Note: Summary annual fuel usage totals assume the following number of GOM OBF wells (existing sources) will be subject to zero discharge under this technology option: 42 SWD wells, 25 SWE wells, 0 DWD wells, and 0 DWE wells

Note: Summary annual fuel usage totals assume the following number of GOM WBF wells (existing sources) under this technology option: 511 SWD wells, 298 SWE wells, 12 DWD wells, and 36 DWE wells

Note: 1 BOE = 42 gallons of diesel

Worksheet No. 2 **Page 1 of 3**

BPT Non-Water Quality Environmental Impacts: Baseline Current Practice

Region: Offshore California

Technology: Zero Discharge (via Haul and Land Disposal & Offshore/On-Site Cuttings Injection) @ 10.20% CRN

Summary Air Emissions (per model well)

Model Well	Air Emissions (short tons/model well)						
	NO_x	THC	SO_2	CO	TSP	Total	Total Per Day
Shallow Water Development	0.2994	0.1217	0.0166	0.0817	0.0191	0.5385	0.1036
Shallow Water Exploratory	0.5259	0.2116	0.0275	0.1501	0.0315	0.9466	0.0868
Deep Water Development	0.4042	0.1640	0.0216	0.1134	0.0248	0.7280	0.0922
Deep Water Exploratory	3.6306	1.6696	0.2321	0.7492	0.2677	6.5492	0.3742

Note: These air emissions per model well are calculated in NWQI Worksheet No. 15

Summary Fuel Usage (per model well)

Model Well		Fuel Usage Per Model Well		
		Gallons	Barrels of Oil Equivalent (BOE)	Barrels of Oil Equivalent (BOE) Per Day
Shallow Water Development		3,428.2	81.6	15.7
Shallow Water Exploratory		6,644.4	158.2	14.5
Deep Water Development		4,930.8	117.4	14.9
Deep Water Exploratory		23,403.1	557.2	31.8

Note: These air emissions per model well are calculated in NWQI Worksheet No. 15

Note: 1 BOE = 42 gallons of diesel

BPT Non-Water Quality Environmental Impacts: Baseline Current Practice

Region: Offshore California
Technology: Zero Discharge (via Haul and Land Disposal & Offshore/On-Site Cuttings Injection) @ 10.20% CRN

Summary Annual Fuel Usage

Model Well		Annual Fuel Usage	
		Gallons	Barrels of Oil Equivalent (BOE)
Shallow Water Development		3,428.2	81.6
Shallow Water Exploratory		6,644.4	158.2
Deep Water Development		0.0	0.0
Deep Water Exploratory		0.0	0.0
TOTAL		10,072.6	239.8

Daily Drill Rig Emissions

Model Well	Air Emissions (short tons/model well)					
	NO_x	THC	SO_2	CO	TSP	Total
Shallow Water Development	3.1570	1.6954	0.2150	0.4525	0.2475	5.7674
Shallow Water Exploratory	3.1570	1.6954	0.2150	0.4525	0.2475	5.7674
Deep Water Development	3.1570	1.6954	0.2150	0.4525	0.2475	5.7674
Deep Water Exploratory	3.1570	1.6954	0.2150	0.4525	0.2475	5.7674

Note: Drill rig emissions include impacts from all rig daily operations and one helicopter trip to and from the rig.

Daily Drill Rig Fuel Usage

Model Well	gallons per model well	Barrels of Oil Equivalent (BOE) per model well
Shallow Water Development	15,388.0	366.4
Shallow Water Exploratory	15,388.0	366.4
Deep Water Development	15,388.0	366.4
Deep Water Exploratory	15,388.0	366.4
TOTAL	61,552.0	1,465.5

CA Baseline Annual Emissions/Fuel Usage

Model Well	OBF (Zero Discharge)		WBF (Discharge @ 10.20%)		WBF (Zero Discharge)	
	Total Air Emissions (tons)	Barrels of Oil Equivalent (BOE)	Total Air Emissions (tons)	Barrels of Oil Equivalent (BOE)	Total Air Emissions (tons)	Barrels of Oil Equivalent (BOE)
Shallow Water Development	30.5288	1,986.8	180.9119	11,538.1	0.0000	0.0
Shallow Water Exploratory	63.8108	4,151.8	252.8128	16,123.7	0.0000	0.0
Deep Water Development	0.0000	0.0	0.0000	0.0	0.0000	0.0
Deep Water Exploratory	0.0000	0.0	0.0000	0.0	0.0000	0.0
TOTAL	**94.3**	**6,138.6**	**433.7**	**27,661.8**	**0.0**	**0.0**

Note: Summary annual air emissions/fuel usage totals assume the following number of SBF wells (existing sources) for baseline current practice
0 SWD wells, 0 SWE wells, 0 DWD wells, and 0 DWE wells
Note: Summary annual air emissions/fuel usage totals assume the following number of OBF wells (existing sources) for baseline current practice
under this technology option: 1 SWD wells, 1 SWE wells, 0 DWD wells, and 0 DWE wells
Note: Summary annual air emissions/fuel usage totals assume the following number of WBF wells (existing sources) for baseline current practice
3 SWD wells, 2 SWE wells, 0 DWD wells, and 0 DWE wells
Note: 1 BOE = 42 gallons of diesel

BPT Non-Water Quality Environmental Impacts: Baseline Current Practice

Region: Offshore California
Technology: Zero Discharge (via Haul and Land Disposal & Offshore/On-Site Cuttings Injection) @ 10.20% CRN

Annual Air Emissions (SBF Baseline Model Well - Discharging at 10.20% CRN)

Model Well	Air Emissions (short tons/model well)					
	NO_x	THC	SO_2	CO	TSP	Total
Shallow Water Development	0.0000	0.0000	0.0000	0.0000	0.0000	0.0000
Shallow Water Exploratory	0.0000	0.0000	0.0000	0.0000	0.0000	0.0000
Deep Water Development	0.0000	0.0000	0.0000	0.0000	0.0000	0.0000
Deep Water Exploratory	0.0000	0.0000	0.0000	0.0000	0.0000	0.0000
Total	**0.0000**	**0.0000**	**0.0000**	**0.0000**	**0.0000**	

Annual Air Emissions (OBF Baseline Model Well - Zero Discharging at 10.20% CRN)

Model Well	Air Emissions (short tons/model well)					
	NOx	THC	SO2	CO	TSP	Total
Shallow Water Development	16.7158	9.3437	1.2082	2.5916	1.3903	31.2496
Shallow Water Exploratory	16.9423	19.4066	2.5022	5.3472	2.8791	47.0774
Deep Water Development	0.0000	0.0000	0.0000	0.0000	0.0000	0.0000
Deep Water Exploratory	0.0000	0.0000	0.0000	0.0000	0.0000	0.0000
Total	**33.6581**	**28.7503**	**3.7104**	**7.9389**	**4.2693**	

Annual Air Emissions (WBF Baseline Model Well - Discharging at 10.20% CRN)

Model Well	Air Emissions (short tons/model well)					
	NO_x	THC	SO_2	CO	TSP	Total
Shallow Water Development	98.8353	52.9238	6.7288	14.1932	7.7457	180.4268
Shallow Water Exploratory	138.1160	73.9576	9.4031	19.8341	10.8241	252.1349
Deep Water Development	0.0000	0.0000	0.0000	0.0000	0.0000	0.0000
Deep Water Exploratory	0.0000	0.0000	0.0000	0.0000	0.0000	0.0000
Total	**236.9514**	**126.8813**	**16.1319**	**34.0273**	**18.5698**	

Note: Summary annual air emissions totals assume the following number of SBF wells (existing sources) for baseline current practice under this technology option: 0 SWD wells, 0 SWE wells, 0 DWD wells, and 0 DWE wells

Note: Summary annual air emissions totals assume the following number of OBF wells (existing sources) for baseline current practice under this technology option: 1 SWD wells, 1 SWE wells, 0 DWD wells, and 0 DWE wells

Note: Summary annual air emissions/fuel usage totals assume the following number of WBF wells (existing sources) for baseline current practice 3 SWD wells, 2 SWE wells, 0 DWD wells, and 0 DWE wells

Worksheet No. 3 **Page 1 of 3**

BPT Non-Water Quality Environmental Impacts: Baseline Current Practice

Region: Cook Inlet, AK

Technology: Zero Discharge (via Haul and Land Disposal & Offshore/On-Site Cuttings Injection) @ 10.20% CRN

Summary Air Emissions (per model well)

Model Well	Air Emissions (short tons/model well)						
	NO_x	THC	SO_2	CO	TSP	Total	Total Per Day
Shallow Water Development	0.0567	0.0078	0.0001	0.0362	0.0000	0.1008	0.0194
Shallow Water Exploratory	0.1188	0.0164	0.0002	0.0758	0.0000	0.2113	0.0194
Deep Water Development	0.0000	0.0000	0.0000	0.0000	0.0000	0.0000	0.0000
Deep Water Exploratory	0.0000	0.0000	0.0000	0.0000	0.0000	0.0000	0.0000

Note: These air emissions per model well are calculated in NWQI Worksheet No. 18

Summary Fuel Usage (per model well)

Model Well		Fuel Usage Per Model Well		
		Gallons	Barrels of Oil Equivalent (BOE)	Barrels of Oil Equivalent (BOE) Per Day
Shallow Water Development		2,283.1	54.4	10.5
Shallow Water Exploratory		4,785.6	113.9	10.5
Deep Water Development		0.0	0.0	0.0
Deep Water Exploratory		0.0	0.0	0.0

Note: These air emissions per model well are calculated in NWQI Worksheet No. 18

Note: 1 BOE = 42 gallons of diesel

BPT Non-Water Quality Environmental Impacts: Baseline Current Practice

Region: Cook Inlet, AK
Technology: Zero Discharge (via Haul and Land Disposal & Offshore/On-Site Cuttings Injection) @ 10.20% CRN

Summary Annual Fuel Usage

Model Well		Annual Fuel Usage	
		Gallons	Barrels of Oil Equivalent (BOE)
Shallow Water Development		2,283.1	54.4
Shallow Water Exploratory		4,785.6	113.9
Deep Water Development		0.0	0.0
Deep Water Exploratory		0.0	0.0
TOTAL		7,068.7	168.3

Daily Drill Rig Emissions

Model Well	Air Emissions (short tons/model well)					
	NO_x	THC	SO_2	CO	TSP	Total
Shallow Water Development	3.1570	1.6954	0.2150	0.4525	0.2475	5.7674
Shallow Water Exploratory	3.1570	1.6954	0.2150	0.4525	0.2475	5.7674
Deep Water Development	3.1570	1.6954	0.2150	0.4525	0.2475	5.7674
Deep Water Exploratory	3.1570	1.6954	0.2150	0.4525	0.2475	5.7674

Note: Drill rig emissions include impacts from all rig daily operations and one helicopter trip to and from the rig.

Daily Drill Rig Fuel Usage

Model Well	gallons per model well	Barrels of Oil Equivalent (BOE) per model well
Shallow Water Development	15,388.0	366.4
Shallow Water Exploratory	15,388.0	366.4
Deep Water Development	15,388.0	366.4
Deep Water Exploratory	15,388.0	366.4
TOTAL	61,552.0	1,465.5

AK Baseline Annual Emissions/Fuel Usage

Model Well	OBF (Zero Discharge)		WBF (Discharge @ 10.20%)		WBF (Zero Discharge)	
	Total Air Emissions (tons)	Barrels of Oil Equivalent (BOE)	Total Air Emissions (tons)	Barrels of Oil Equivalent (BOE)	Total Air Emissions (tons)	Barrels of Oil Equivalent (BOE)
Shallow Water Development	30.0911	1,959.5	180.9119	11,538.1	0.0000	0.0
Shallow Water Exploratory	63.0755	4,107.5	126.4064	8,061.8	0.0000	0.0
Deep Water Development	0.0000	0.0	0.0000	0.0	0.0000	0.0
Deep Water Exploratory	0.0000	0.0	0.0000	0.0	0.0000	0.0
TOTAL	**93.2**	**6,067.0**	**307.3**	**19,599.9**	**0.0**	**0.0**

Note: Summary annual air emission/fuel usage totals assume the following number of SBF wells (existing sources) for baseline current practice
0 SWD wells, 0 SWE wells, 0 DWD wells, and 0 DWE wells

Note: Summary annual air emission/fuel usage totals assume the following number of OBF wells (existing sources) for baseline current practice under this technology option: 1 SWD wells, 1 SWE wells, 0 DWD wells, and 0 DWE wells

Note: Summary annual air emission/fuel usage totals assume the following number of WBF wells (existing sources) for baseline current practice under this technology option: 3 SWD wells, 1 SWE wells, 0 DWD wells, and 0 DWE wells

Note: 1 BOE = 42 gallons of diesel

Worksheet No. 3 **Page 3 of 3**

BPT Non-Water Quality Environmental Impacts: Baseline Current Practice

Region: Cook Inlet, AK

Technology: Zero Discharge (via Haul and Land Disposal & Offshore/On-Site Cuttings Injection) @ 10.20% CRN

Annual Air Emissions (SBF Baseline Model Well - Discharging at 10.20% CRN)

Model Well	Air Emissions (short tons/model well)					
	NO_x	THC	SO_2	CO	TSP	Total
Shallow Water Development	0.0000	0.0000	0.0000	0.0000	0.0000	0.0000
Shallow Water Exploratory	0.0000	0.0000	0.0000	0.0000	0.0000	0.0000
Deep Water Development	0.0000	0.0000	0.0000	0.0000	0.0000	0.0000
Deep Water Exploratory	0.0000	0.0000	0.0000	0.0000	0.0000	0.0000
Total	**0.0000**	**0.0000**	**0.0000**	**0.0000**	**0.0000**	

Annual Air Emissions (OBF Baseline Model Well - Zero Discharging at 10.20%CRN)

Model Well	Air Emissions (short tons/model well)					
	NOx	THC	SO2	CO	TSP	Total
Shallow Water Development	16.4731	8.8239	1.1179	2.3892	1.2870	30.0911
Shallow Water Exploratory	16.5352	18.4963	2.3432	5.0081	2.6978	45.0806
Deep Water Development	0.0000	0.0000	0.0000	0.0000	0.0000	0.0000
Deep Water Exploratory	0.0000	0.0000	0.0000	0.0000	0.0000	0.0000
Total	**33.0083**	**27.3202**	**3.4611**	**7.3973**	**3.9848**	

Annual Air Emissions (WBF Baseline Model Well - Discharging at 10.20% CRN)

Model Well	Air Emissions (short tons/model well)					
	NO_x	THC	SO_2	CO	TSP	Total
Shallow Water Development	98.8353	52.9238	6.7288	14.1932	7.7457	180.4268
Shallow Water Exploratory	69.0580	36.9788	4.7015	9.9171	5.4120	126.0674
Deep Water Development	0.0000	0.0000	0.0000	0.0000	0.0000	0.0000
Deep Water Exploratory	0.0000	0.0000	0.0000	0.0000	0.0000	0.0000
Total	**167.8934**	**89.9025**	**11.4303**	**24.1103**	**13.1577**	

Note: Summary annual air emissions totals assume the following number of SBF wells (existing sources) for baseline current practice under this technology option: 0 SWD wells, 0 SWE wells, 0 DWD wells, and 0 DWE wells

Note: Summary annual air emissions totals assume the following number of OBF wells (existing sources) for baseline current practice under this technology option: 1 SWD wells, 1 SWE wells, 0 DWD wells, and 0 DWE wells

Note: Summary annual air emissions totals assume the following number of WBF wells (existing sources) for baseline current practice under this technology option: 3 SWD wells, 1 SWE wells, 0 DWD wells, and 0 DWE wells

Worksheet No. 4 **Page 1 of 4**

BAT Non-Water Quality Environmental Impacts: BAT Option 1

Region: Offshore Gulf of Mexico (GOM)

Technology: SBF Discharges from BAT Solids Control System (e.g., Cuttings Dryer & Fines Removal Unit) at 4.03%CRN

Fuel-Consuming Activity	Diesel Fuel Consumed (gal/model well)				Note (All information below is detailed in EPA, 2000 unless otherwise noted.)
	Shallow Water		Deep Water		
	Development	Exploratory	Development	Exploratory	
Baseline Solids Control Equipment	748.8	1,569.6	1,137.6	2,520.0	Baseline equipment fuel usage is 6 gal-diesel/hr
Improved Solids Control Equipment (e.g., Cuttings Dryer)	748.8	1,569.6	1,137.6	2,520.0	Cuttings dryer equipment fuel usage is 6 gal-diesel/hr
TOTAL	1,497.6	3,139.2	2,275.2	5,040.0	

Energy-Consuming Activity	Energy Requirements (hp-hr/model well)				Note (All information below is detailed in EPA, 2000 unless otherwise noted.)
	Shallow Water		Deep Water		
	Development	Exploratory	Development	Exploratory	
Baseline Solids Control Equipment	8,424.0	17,658.0	12,798.0	28,350.0	Baseline equipment include: 4 x 5 hp primary shale shakers, 4 x 5 hp secondary shale shakers, and 1 x 27.5 hp fines removal unit (avg of 5 hp mud cleaner and 50 hp decanting centrifuge).
Improved Solids Control Equipment (e.g., Cuttings Dryer)	14,098.7	29,553.0	21,419.1	47,447.4	Average of MUD-10 (38.22 hp) and vertical centrifuge (187.72 hp)
TOTAL	22,522.7	47,211.0	34,217.1	75,797.4	

BAT Non-Water Quality Environmental Impacts: BAT Option 1

Region: Offshore Gulf of Mexico (GOM)
Technology: SBF Discharges from BAT Solids Control System (e.g., Cuttings Dryer & Fines Removal Unit) at 4.03%CRN

BAT Option 1 Solids Control Air Emissions (per model well) - Rig Fuel Type for Electricity Generation (Diesel)

Model Well	Air Emissions (short tons/model well)					
	NO_x	THC	SO_2	CO	TSP	Total
Shallow Water Development	0.3476	0.0278	0.0231	0.0752	0.0248	0.4985
Shallow Water Exploratory	0.7286	0.0583	0.0484	0.1577	0.0520	1.0450
Deep Water Development	0.5280	0.0422	0.0351	0.1143	0.0377	0.7574
Deep Water Exploratory	1.1697	0.0936	0.0778	0.2532	0.0836	1.6778

BAT Option 1 Solids Control Air Emissions (per model well) - Rig Fuel Type for Electricity Generation (Natural Gas)

Model Well	Air Emissions (short tons/model well)					
	NO_x	THC	SO_2	CO	TSP	Total
Shallow Water Development	0.0323	0.0045	0.0000	0.0206	0.0000	0.0574
Shallow Water Exploratory	0.0677	0.0094	0.0001	0.0432	0.0000	0.1203
Deep Water Development	0.0490	0.0068	0.0001	0.0313	0.0000	0.0872
Deep Water Exploratory	0.1086	0.0150	0.0002	0.0693	0.0000	0.1932

BAT Option 1 Solids Control Air Emissions (per model well) - Weighted by Rig Diesel/Natural Gas Percentage Fuel Split (85%/15%)

Model Well	Air Emissions (short tons/model well)						
	NO_x	THC	SO_2	CO	TSP	Total	Total Per Day
Shallow Water Development	0.3003	0.0243	0.0197	0.0670	0.0211	0.4324	0.0831
Shallow Water Exploratory	0.6294	0.0509	0.0412	0.1405	0.0442	0.9063	0.0831
Deep Water Development	0.4562	0.0369	0.0299	0.1018	0.0321	0.6569	0.0831
Deep Water Exploratory	1.0105	0.0818	0.0661	0.2256	0.0710	1.4551	0.0831

BAT Non-Water Quality Environmental Impacts: BAT Option 1

Region: Offshore Gulf of Mexico (GOM)
Technology: SBF Discharges from BAT Solids Control System (e.g., Cuttings Dryer & Fines Removal Unit) at 4.03%CRN

Daily Drill Rig Emissions

Model Well	Air Emissions (short tons/model well)					
	NO_x	THC	SO_2	CO	TSP	Total
Shallow Water Development	3.1570	1.6954	0.2150	0.4525	0.2475	5.7674
Shallow Water Exploratory	3.1570	1.6954	0.2150	0.4525	0.2475	5.7674
Deep Water Development	3.1570	1.6954	0.2150	0.4525	0.2475	5.7674
Deep Water Exploratory	3.1570	1.6954	0.2150	0.4525	0.2475	5.7674

Note: Drill rig emissions include impacts from all rig daily operations and one helicopter trip to and from the rig.

Daily Drill Rig Fuel Usage

Model Well	gallons per model well	Barrels of Oil Equivalent (BOE) per model well
Shallow Water Development	15,388.0	366.4
Shallow Water Exploratory	15,388.0	366.4
Deep Water Development	15,388.0	366.4
Deep Water Exploratory	15,388.0	366.4
TOTAL	61,552.0	1,465.5

GOM BAT1 Daily Emissions/Fuel Usage

Model Well	SBF (Discharge @ 4.03%)		OBF (Zero Discharge)		WBF (Discharge @ 10.20%)	
	Total Air Emissions (tons)	Barrels of Oil Equivalent (BOE)	Total Air Emissions (tons)	Barrels of Oil Equivalent (BOE)	Total Air Emissions (tons)	Barrels of Oil Equivalent (BOE)
Shallow Water Development	3,772.4077	240,663.9	806.3927	51,528.7	28,885.6052	1,842,243.1
Shallow Water Exploratory	4,719.0199	301,053.8	1,002.9762	64,027.1	35,267.3896	2,249,255.5
Deep Water Development	785.7233	50,125.9	0.0000	0.0	1007.772	64,272.9
Deep Water Exploratory	5,016.8108	320,051.7	0.0000	0.0	6,900.1667	440,073.3
TOTAL	**14,294.0**	**911,895.3**	**1,809.4**	**115,555.9**	**72,060.9**	**4,595,844.8**
	88,164.3					
	5,623,296.0					

Note: Summary annual air emission/fuel usage totals assume the following number of GOM SBF wells (existing sources) under this technology option:
124 SWD wells, 74 SWE wells, 17 DWD wells, and 49 DWE wells

Note: Summary annual air emission/fuel usage totals assume the following number of GOM OBF wells (existing sources) will convert to using SBF:
25 SWD wells, 15 SWE wells, 0 DWD wells, and 0 DWE wells

Note: Summary annual air emission/fuel usage totals assume the following number of GOM WBF wells (existing sources) under this technology option:
479 SWD wells, 279 SWE wells, 11 DWD wells, and 34 DWE wells

Note: 1 BOE = 42 gallons of diesel

BAT Non-Water Quality Environmental Impacts: BAT Option 1

Region: Offshore Gulf of Mexico (GOM)
Technology: SBF Discharges from BAT Solids Control System (e.g., Cuttings Dryer & Fines Removal Unit) at 4.03%CRN

Annual Air Emissions (SBF BAT1 Model Well - Discharging at 4.03% CRN

Model Well	Air Emissions (short tons/model well)					
	NO_x	THC	SO_2	CO	TSP	Total
Shallow Water Development	2,072.8680	1,096.2078	141.0433	300.0839	162.2047	3,772.4077
Shallow Water Exploratory	1,261.3912	656.1600	85.7652	184.5197	98.5113	2,286.3475
Deep Water Development	286.8340	150.5011	19.5101	41.7322	22.4240	521.0014
Deep Water Exploratory	853.9205	435.9959	58.0128	126.3508	66.5429	1,540.8229
Total	**4,475.0137**	**2,338.8648**	**304.3314**	**652.6866**	**349.6830**	

Annual Air Emissions (OBF Baseline Model Well - Zero Discharging at 10.20% CRN)

Model Well	Air Emissions (short tons/model well)					
	NOx	THC	SO2	CO	TSP	Total
Shallow Water Development	443.0487	233.5919	30.2045	64.7911	34.7565	806.3927
Shallow Water Exploratory	550.9498	291.0989	37.5329	80.2084	43.1862	1,002.9762
Deep Water Development	0.0000	0.0000	0.0000	0.0000	0.0000	0.0000
Deep Water Exploratory	0.0000	0.0000	0.0000	0.0000	0.0000	0.0000
Total	**993.9986**	**524.6908**	**67.7374**	**144.9995**	**77.9427**	

Annual Air Emissions (WBF Baseline Model Well - Discharging at 10.20% CRN)

Model Well	Air Emissions (short tons/model well)					
	NO_x	THC	SO_2	CO	TSP	Total
Shallow Water Development	15,780.7080	8,450.1591	1,074.3659	2,266.1832	1,236.7267	28,808.1429
Shallow Water Exploratory	19,267.1877	10,317.0784	1,311.7288	2,766.8579	1,509.9605	35,172.8133
Deep Water Development	550.5635	294.8124	37.4829	79.0635	43.1474	1,005.0697
Deep Water Exploratory	3,769.6809	2,018.5662	256.6435	541.3438	295.4281	6,881.6625
Total	**39,368.1402**	**21,080.6161**	**2,680.2211**	**5,653.4484**	**3,085.2627**	

Note: Summary annual air emissions totals assume the following number of GOM SBF wells (existing sources) under this technology option:
124 SWD wells, 74 SWE wells, 17 DWD wells, and 49 DWE wells

Note: Summary annual air emissions totals assume the following number of GOM OBF wells (existing sources) will convert to using SBF:
25 SWD wells, 15 SWE wells, 0 DWD wells, and 0 DWE wells

Note: Summary annual air emissions totals assume the following number of GOM WBF wells (existing sources) under this technology option:
479 SWD wells, 279 SWE wells, 11 DWD wells, and 34 DWE wells

Worksheet No. 5 **Page 1 of 4**
BAT Non-Water Quality Environmental Impacts: BAT Option 1

Region: Offshore California
Technology: SBF Discharges from BAT Solids Control System (e.g., Cuttings Dryer & Fines Removal Unit) 4.03%CRN

Fuel-Consuming Activity	Diesel Fuel Consumed (gal/model well)				Note (All information below is detailed in EPA, 2000 unless otherwise noted.)
	Shallow Water		Deep Water		
	Development	Exploratory	Development	Exploratory	
Baseline Solids Control Equipment	748.8	1,569.6	1,137.6	2,520.0	Baseline equipment fuel usage is 6 gal-diesel/hr
Improved Solids Control Equipment (e.g., Cuttings Dryer)	748.8	1,569.6	1,137.6	2,520.0	Cuttings dryer equipment fuel usage is 6 gal-diesel/hr
TOTAL	1,497.6	3,139.2	2,275.2	5,040.0	

Energy-Consuming Activity	Energy Requirements (hp-hr/model well)				Note (All information below is detailed in EPA, 2000 unless otherwise noted.)
	Shallow Water		Deep Water		
	Development	Exploratory	Development	Exploratory	
Baseline Solids Control Equipment	8,424.0	17,658.0	12,798.0	28,350.0	Baseline equipment include: 4 x 5 hp primary shale shakers, 4 x 5 hp secondary shale shakers, and 1 x 27.5 hp fines removal unit (avg of 5 hp mud cleaner and 50 hp decanting centrifuge).
Improved Solids Control Equipment (e.g., Cuttings Dryer)	14,098.7	29,553.0	21,419.1	47,447.4	Average of MUD-10 (38.22 hp) and vertical centrifuge (187.72 hp)
TOTAL	22,522.7	47,211.0	34,217.1	75,797.4	

BAT Non-Water Quality Environmental Impacts: BAT Option 1

Region: Offshore California
Technology: SBF Discharges from BAT Solids Control System (e.g., Cuttings Dryer & Fines Removal Unit) 4.03%CRN

BAT Option 1 Solids Control Air Emissions (per model well) - Rig Fuel Type for Electricity Generation (Diesel)

Model Well	Air Emissions (short tons/model well)					
	NO_x	THC	SO_2	CO	TSP	Total
Shallow Water Development	0.3476	0.0278	0.0231	0.0752	0.0248	0.4985
Shallow Water Exploratory	0.7286	0.0583	0.0484	0.1577	0.0520	1.0450
Deep Water Development	0.5280	0.0422	0.0351	0.1143	0.0377	0.7574
Deep Water Exploratory	1.1697	0.0936	0.0778	0.2532	0.0836	1.6778

BAT Option 1 Solids Control Air Emissions (per model well) - Rig Fuel Type for Electricity Generation (Natural Gas)

Model Well	Air Emissions (short tons/model well)					
	NO_x	THC	SO_2	CO	TSP	Total
Shallow Water Development	0.0323	0.0045	0.0000	0.0206	0.0000	0.0574
Shallow Water Exploratory	0.0677	0.0094	0.0001	0.0432	0.0000	0.1203
Deep Water Development	0.0490	0.0068	0.0001	0.0313	0.0000	0.0872
Deep Water Exploratory	0.1086	0.0150	0.0002	0.0693	0.0000	0.1932

BAT Option 1 Solids Control Air Emissions (per model well) - Weighted by Rig Diesel/Natural Gas Percentage Fuel Split (0%/100%)

Model Well	Air Emissions (short tons/model well)						
	NO_x	THC	SO_2	CO	TSP	Total	Total Per Day
Shallow Water Development	0.0323	0.0045	0.0000	0.0206	0.0000	0.0574	0.0110
Shallow Water Exploratory	0.0677	0.0094	0.0001	0.0432	0.0000	0.1203	0.0110
Deep Water Development	0.0490	0.0068	0.0001	0.0313	0.0000	0.0872	0.0110
Deep Water Exploratory	0.1086	0.0150	0.0002	0.0693	0.0000	0.1932	0.0110

BAT Non-Water Quality Environmental Impacts: BAT Option 1

Region: Offshore California
Technology: SBF Discharges from BAT Solids Control System (e.g., Cuttings Dryer & Fines Removal Unit) 4.03%CRN

Daily Drill Rig Emissions

Model Well	Air Emissions (short tons/model well)					
	NO_x	THC	SO_2	CO	TSP	Total
Shallow Water Development	3.1570	1.6954	0.2150	0.4525	0.2475	5.7674
Shallow Water Exploratory	3.1570	1.6954	0.2150	0.4525	0.2475	5.7674
Deep Water Development	3.1570	1.6954	0.2150	0.4525	0.2475	5.7674
Deep Water Exploratory	3.1570	1.6954	0.2150	0.4525	0.2475	5.7674

Note: Drill rig emissions include impacts from all rig daily operations and one helicopter trip to and from the rig.

Daily Drill Rig Fuel Usage

Model Well	gallons per model well	Barrels of Oil Equivalent (BOE) per model well
Shallow Water Development	15,388.0	366.4
Shallow Water Exploratory	15,388.0	366.4
Deep Water Development	15,388.0	366.4
Deep Water Exploratory	15,388.0	366.4
TOTAL	61,552.0	1,465.5

CA BAT1 Annual Emissions/Fuel Usage

Model Well	OBF (Zero Discharge)		WBF (Discharge @ 10.20%)		WBF (Zero Discharge)	
	Total Air Emissions (tons)	Barrels of Oil Equivalent (BOE)	Total Air Emissions (tons)	Barrels of Oil Equivalent (BOE)	Total Air Emissions (tons)	Barrels of Oil Equivalent (BOE)
Shallow Water Development	30.5288	1,986.8	180.9119	11,538.1	0.0000	0.0
Shallow Water Exploratory	63.8108	4,151.8	252.8128	16,123.7	0.0000	0.0
Deep Water Development	0.0000	0.0	0.000	0.0	0.0000	0.0
Deep Water Exploratory	0.0000	0.0	0.0000	0.0	0.0000	0.0
TOTAL	**94.3**	**6,138.6**	**433.7**	**27,661.8**	**0.0**	**0.0**
	528.1					
	33,800.3					

Note: Summary annual fuel usage totals assume the following number of SBF wells (existing sources) under this technology option:
0 SWD wells, 0 SWE wells, 0 DWD wells, and 0 DWE wells

Note: Summary annual fuel usage totals assume the following number of OBF wells (existing sources) will convert to using SBF:
1 SWD wells, 1 SWE wells, 0 DWD wells, and 0 DWE wells

Note: Summary annual air emissions/fuel usage totals assume the following number of WBF wells (existing sources) for baseline current practice
3 SWD wells, 2 SWE wells, 0 DWD wells, and 0 DWE wells

Note: 1 BOE = 42 gallons of diesel

BAT Non-Water Quality Environmental Impacts: BAT Option 1

Region: Offshore California
Technology: SBF Discharges from BAT Solids Control System (e.g., Cuttings Dryer & Fines Removal Ur

Annual Air Emissions (SBF BAT1 Model Well - Discharging at 4.03% CRN

Model Well	Air Emissions (short tons/model well)				
	NO_x	THC	SO_2	CO	TSP
Shallow Water Development	0.0000	0.0000	0.0000	0.0000	0.0000
Shallow Water Exploratory	0.0000	0.0000	0.0000	0.0000	0.0000
Deep Water Development	0.0000	0.0000	0.0000	0.0000	0.0000
Deep Water Exploratory	0.0000	0.0000	0.0000	0.0000	0.0000
Total	**0.0000**	**0.0000**	**0.0000**	**0.0000**	**0.0000**

Annual Air Emissions (OBF Baseline Model Well - Zero Discharging at 10.20%CRN)

Model Well	Air Emissions (short tons/model well)				
	NOx	THC	SO2	CO	TSP
Shallow Water Development	16.7158	8.9378	1.1344	2.4347	1.3061
Shallow Water Exploratory	16.9423	18.6914	2.3705	5.0824	2.7293
Deep Water Development	0.0000	0.0000	0.0000	0.0000	0.0000
Deep Water Exploratory	0.0000	0.0000	0.0000	0.0000	0.0000
Total	**33.6581**	**27.6292**	**3.5050**	**7.5171**	**4.0353**

Annual Air Emissions (WBF Baseline Model Well - Discharging at 10.20% CRN)

Model Well	Air Emissions (short tons/model well)				
	NO_x	THC	SO_2	CO	TSP
Shallow Water Development	98.8353	52.9238	6.7288	14.1932	7.7457
Shallow Water Exploratory	138.1160	73.9576	9.4031	19.8341	10.8241
Deep Water Development	0.0000	0.0000	0.0000	0.0000	0.0000
Deep Water Exploratory	0.0000	0.0000	0.0000	0.0000	0.0000
Total	**236.9514**	**126.8813**	**16.1319**	**34.0273**	**18.5698**

Note: Summary annual air emissions totals assume the following number of SBF wells (existing sources) under this technology option:
0 SWD wells, 0 SWE wells, 0 DWD wells, and 0 DWE wells

Note: Summary annual air emissions totals assume the following number of OBF wells (existing sources) will convert to using SBF:
1 SWD wells, 1 SWE wells, 0 DWD wells, and 0 DWE wells

Note: Summary annual air emissions totals assume the following number of WBF wells (existing sources) for baseline current practice
3 SWD wells, 2 SWE wells, 0 DWD wells, and 0 DWE wells

Worksheet No. 6 **Page 1 of 4**

BAT Non-Water Quality Environmental Impacts: BAT Option 1

Region: Cook Inlet, AK

Technology: SBF Discharges from BAT Solids Control System (e.g., Cuttings Dryer & Fines Removal Unit) at 4.03% CRN

Fuel-Consuming Activity	Diesel Fuel Consumed (gal/model well)				Note (All information below is detailed in EPA, 2000 unless otherwise noted.)
	Shallow Water		Deep Water		
	Development	Exploratory	Development	Exploratory	
Baseline Solids Control Equipment	748.8	1,569.6	1,137.6	2,520.0	Baseline equipment fuel usage is 6 gal-diesel/hr
Improved Solids Control Equipment (e.g., Cuttings Dryer)	748.8	1,569.6	1,137.6	2,520.0	Cuttings dryer equipment fuel usage is 6 gal-diesel/hr
TOTAL	1,497.6	3,139.2	2,275.2	5,040.0	

Energy-Consuming Activity	Energy Requirements (hp-hr/model well)				Note (All information below is detailed in EPA, 2000 unless otherwise noted.)
	Shallow Water		Deep Water		
	Development	Exploratory	Development	Exploratory	
Baseline Solids Control Equipment	8,424.0	17,658.0	12,798.0	28,350.0	Baseline equipment include: 4 x 5 hp primary shale shakers, 4 x 5 hp secondary shale shakers, and 1 x 27.5 hp fines removal unit (avg of 5 hp mud cleaner and 50 hp decanting centrifuge).
Improved Solids Control Equipment (e.g., Cuttings Dryer)	14,098.7	29,553.0	21,419.1	47,447.4	Average of MUD-10 (38.22 hp) and vertical centrifuge (187.72 hp)
TOTAL	22,522.7	47,211.0	34,217.1	75,797.4	

BAT Non-Water Quality Environmental Impacts: BAT Option 1

Region: Cook Inlet, AK
Technology: SBF Discharges from BAT Solids Control System (e.g., Cuttings Dryer & Fines Removal Unit) at 4.03% CRN

BAT Option 1 Solids Control Air Emissions (per model well) - Rig Fuel Type for Electricity Generation (Diesel)

Model Well	Air Emissions (short tons/model well)					
	NO_x	THC	SO_2	CO	TSP	Total
Shallow Water Development	0.3476	0.0278	0.0231	0.0752	0.0248	0.4985
Shallow Water Exploratory	0.7286	0.0583	0.0484	0.1577	0.0520	1.0450
Deep Water Development	0.5280	0.0422	0.0351	0.1143	0.0377	0.7574
Deep Water Exploratory	1.1697	0.0936	0.0778	0.2532	0.0836	1.6778

BAT Option 1 Solids Control Air Emissions (per model well) - Rig Fuel Type for Electricity Generation (Natural Gas)

Model Well	Air Emissions (short tons/model well)					
	NO_x	THC	SO_2	CO	TSP	Total
Shallow Water Development	0.0323	0.0045	0.0000	0.0206	0.0000	0.0574
Shallow Water Exploratory	0.0677	0.0094	0.0001	0.0432	0.0000	0.1203
Deep Water Development	0.0490	0.0068	0.0001	0.0313	0.0000	0.0872
Deep Water Exploratory	0.1086	0.0150	0.0002	0.0693	0.0000	0.1932

BAT Option 1 Solids Control Air Emissions (per model well) - Weighted by Rig Diesel/Natural Gas Percentage Fuel Split (0%/100%)

Model Well	Air Emissions (short tons/model well)						
	NO_x	THC	SO_2	CO	TSP	Total	Total Per Day
Shallow Water Development	0.0323	0.0045	0.0000	0.0206	0.0000	0.0574	0.0110
Shallow Water Exploratory	0.0677	0.0094	0.0001	0.0432	0.0000	0.1203	0.0110
Deep Water Development	0.0490	0.0068	0.0001	0.0313	0.0000	0.0872	0.0110
Deep Water Exploratory	0.1086	0.0150	0.0002	0.0693	0.0000	0.1932	0.0110

BAT Non-Water Quality Environmental Impacts: BAT Option 1

Region: Cook Inlet, AK
Technology: SBF Discharges from BAT Solids Control System (e.g., Cuttings Dryer & Fines Removal Unit) at 4.03% CRN

Daily Drill Rig Emissions

Model Well	Air Emissions (short tons/model well)					
	NO_x	THC	SO_2	CO	TSP	Total
Shallow Water Development	3.1570	1.6954	0.2150	0.4525	0.2475	5.7674
Shallow Water Exploratory	3.1570	1.6954	0.2150	0.4525	0.2475	5.7674
Deep Water Development	3.1570	1.6954	0.2150	0.4525	0.2475	5.7674
Deep Water Exploratory	3.1570	1.6954	0.2150	0.4525	0.2475	5.7674

Note: Drill rig emissions include impacts from all rig daily operations and one helicopter trip to and from the rig.

Daily Drill Rig Fuel Usage

Model Well	gallons per model well	Barrels of Oil Equivalent (BOE) per model well
Shallow Water Development	15,388.0	366.4
Shallow Water Exploratory	15,388.0	366.4
Deep Water Development	15,388.0	366.4
Deep Water Exploratory	15,388.0	366.4
TOTAL	61,552.0	1,465.5

AK BAT1 Daily Emissions/Fuel Usage

Model Well	SBF (Discharge @4.03%)		WBF (Discharge @ 10.20%)		OBF (Zero Discharge)	
	Total Air Emissions (tons)	Barrels of Oil Equivalent (BOE)	Total Air Emissions (tons)	Barrels of Oil Equivalent (BOE)	Total Air Emissions (tons)	Barrels of Oil Equivalent (BOE)
Shallow Water Development	30.0477	1,940.8	180.9119	11,538.1	0.0000	0.0
Shallow Water Exploratory	0.0000	0.0	126.4064	8,061.8	63.0755	4,107.5
Deep Water Development	0.0000	0.0	0.000	0.0	0.0000	0.0
Deep Water Exploratory	0.0000	0.0	0.0000	0.0	0.0000	0.0
TOTAL	**30.0**	**1,940.8**	**307.3**	**19,599.9**	**63.1**	**4,107.5**
	400.4					
	25,648.2					

Note: Summary annual fuel usage totals assume the following number of SBF wells (existing sources) under this technology option:
1 SWD wells, 0 SWE wells, 0 DWD wells, and 0 DWE wells

Note: Summary annual fuel usage totals assume the following number of OBF wells (existing sources) under this technology option:
0 SWD wells, 1 SWE wells, 0 DWD wells, and 0 DWE wells

Note: Summary annual air emissions totals assume the following number of WBF wells (existing sources) under this technology option:
3 SWD wells, 1 SWE wells, 0 DWD wells, and 0 DWE wells

Note: 1 BOE = 42 gallons of diesel

BAT Non-Water Quality Environmental Impacts: BAT Option 1

Region: Cook Inlet, AK
Technology: SBF Discharges from BAT Solids Control System (e.g., Cuttings Dryer & Fines Removal Unit) at 4.03% CRN

Annual Air Emissions (SBF BAT1 Model Well - Discharging at 4.03% CRN

Model Well	Air Emissions (short tons/model well)					
	NO_x	THC	SO_2	CO	TSP	Total
Shallow Water Development	16.4487	8.8205	1.1178	2.3736	1.2870	30.0477
Shallow Water Exploratory	0.0000	0.0000	0.0000	0.0000	0.0000	0.0000
Deep Water Development	0.0000	0.0000	0.0000	0.0000	0.0000	0.0000
Deep Water Exploratory	0.0000	0.0000	0.0000	0.0000	0.0000	0.0000
Total	**16.4487**	**8.8205**	**1.1178**	**2.3736**	**1.2870**	

Annual Air Emissions (OBF Baseline Model Well - Zero Discharging at 10.20% CRN)

Model Well	Air Emissions (short tons/model well)					
	NOx	THC	SO2	CO	TSP	Total
Shallow Water Development	0.0000	0.0000	0.0000	0.0000	0.0000	0.0000
Shallow Water Exploratory	16.5352	8.8325	1.1180	2.4288	1.2870	30.2015
Deep Water Development	0.0000	0.0000	0.0000	0.0000	0.0000	0.0000
Deep Water Exploratory	0.0000	0.0000	0.0000	0.0000	0.0000	0.0000
Total	**16.5352**	**8.8325**	**1.1180**	**2.4288**	**1.2870**	

Annual Air Emissions (WBF Baseline Model Well - Discharging at 10.20% CRN)

Model Well	Air Emissions (short tons/model well)					
	NO_x	THC	SO_2	CO	TSP	Total
Shallow Water Development	98.8353	52.9238	6.7288	14.1932	7.7457	180.4268
Shallow Water Exploratory	69.0580	36.9788	4.7015	9.9171	5.4120	126.0674
Deep Water Development	0.0000	0.0000	0.0000	0.0000	0.0000	0.0000
Deep Water Exploratory	0.0000	0.0000	0.0000	0.0000	0.0000	0.0000
Total	**167.8934**	**89.9025**	**11.4303**	**24.1103**	**13.1577**	

Note: Summary annual air emissions totals assume the following number of SBF wells (existing sources) under this technology option:
1 SWD wells, 0 SWE wells, 0 DWD wells, and 0 DWE wells

Note: Summary annual air emissions totals assume the following number of OBF wells (existing sources) under this technology option:
0 SWD wells, 1 SWE wells, 0 DWD wells, and 0 DWE wells

Note: Summary annual air emissions totals assume the following number of WBF wells (existing sources) under this technology option:
3 SWD wells, 1 SWE wells, 0 DWD wells, and 0 DWE wells

BAT Non-Water Quality Environmental Impacts: BAT Option 2

Region: Offshore Gulf of Mexico (GOM)
Technology: SBF Discharge from BAT Solids Control System (e.g., Cuttings Dryer only at 3.82% CRN) & ZD of fines

Fuel-Consuming Activity	Diesel Fuel Consumed (gal/model well)				Note
	Shallow Water		Deep Water		(All information below is detailed in EPA, 2000 unless otherwise noted.)
	Development	Exploratory	Development	Exploratory	
Cuttings Dryer Discharge					
Baseline Solids Control Equipment	748.8	1,569.6	1,137.6	2,520.0	Baseline equipment fuel usage is 6 gal-diesel/hr
Improved Solids Control Equipment (e.g., Cuttings Dryer)	748.8	1,569.6	1,137.6	2,520.0	Cuttings dryer equipment fuel usage is 6 gal-diesel/hr
Zero Discharge of Fines					
Regular Supply Boat Transit	870.4	870.4	870.4	870.4	EPA assumes that the volume of fines waste can be managed via regular supply boats
Dedicated Supply Boat Transit	0.0	0.0	0.0	0.0	
Total Supply Boat Transit	870.4	870.4	870.4	870.4	
Barge Transit	1.7	3.3	3.3	6.7	
Supply Boat Maneuvering	25.3	25.3	25.3	25.3	
Dedicated Supply Boat Loading	0.0	0.0	0.0	0.0	EPA assumes that the volume of fines waste can be managed via regular supply boats
Regular Supply Boat Loading	45.5	50.6	50.6	60.7	
Supply Boat Auxiliary Generator (in Port Demurrage)	144.0	144.0	144.0	144.0	
Supply Boat Cranes	3.3	6.7	6.7	13.3	
Barge Cranes	1.7	3.3	3.3	6.7	
Trucks	5.0	5.0	5.0	5.0	
Subtotal	2,594.5	4,247.9	3,383.9	6,172.1	

BAT Non-Water Quality Environmental Impacts: BAT Option 2

Region: Offshore Gulf of Mexico (GOM)
Technology: SBF Discharge from BAT Solids Control System (e.g., Cuttings Dryer only at 3.82% CRN) & ZD of fines

Fuel-Consuming Activity	Diesel Fuel Consumed (gal/model well)				Note (All information below is detailed in EPA, 2000 unless otherwise noted.)
	Shallow Water		Deep Water		
	Development	Exploratory	Development	Exploratory	
Zero Discharge of Fines (cont.)					
On-shore Disposal (Landfarming)					
Wheel Tractor for Grading at Landfarm	1.7	1.7	1.7	1.7	
Dozer/Loader for Spreading Waste at Landfarm	44.0	44.0	44.0	44.0	
On-shore Landfarming Subtotal:	45.7	45.7	45.7	45.7	
On-shore Disposal (Injection)					
Cuttings Transfer	0.1	0.2	0.2	0.4	Hours of operation equals the cuttings waste volume divided by cuttings injection rate (bbl/hr). The transfer equipment utilizes one (1) 100 hp vacuum pump.
Cuttings Grinding/Processing	0.1	0.2	0.2	0.4	Hours of operation equals the cuttings waste volume divided by cuttings injection rate (bbl/hr). Total power utilized by the grinding and processing equipment is 120 hp.
Cuttings Injection	0.1	0.2	0.2	0.4	Hours of operation equals the cuttings waste volume divided by cuttings injection rate (bbl/hr).
On-shore Injection Subtotal:	0.3	0.7	0.5	1.2	
On-shore Disposal Subtotal:	9.4	9.7	9.5	10.1	Weighted average using landfarming/on-shore injection percentage split (20%/80%) of offshore wastes sent on-shore
TOTAL Diesel Per Well (Gal)	2,603.9	4,257.6	3,393.4	6,182.2	

BAT Non-Water Quality Environmental Impacts: BAT Option 2

Region: Offshore Gulf of Mexico (GOM)
Technology: SBF Discharge from BAT Solids Control System (e.g., Cuttings Dryer only at 3.82% CRN) & ZD of fines

Energy-Consuming Activity	Energy Requirements (hp-hr/model well)				Note (All information below is detailed in EPA, 2000 unless otherwise noted.)
	Shallow Water		Deep Water		
	Development	Exploratory	Development	Exploratory	
Baseline Solids Control Equipment	8,424.0	17,658.0	12,798.0	28,350.0	Baseline equipment include: 4 x 5 hp primary shale shakers, 4 x 5 hp secondary shale shakers, and 1 x 27.5 hp fines removal unit (avg of 5 hp mud cleaner and 50 hp decanting centrifuge).
Improved Solids Control Equipment (e.g., Cuttings Dryer)	14,098.7	29,553.0	21,419.1	47,447.4	Average of MUD-10 (38.22 hp) and vertical centrifuge (187.72 hp)
Supply Boat Auxiliary Generator (in Port Demurrage)	1,440.0	1,440.0	1,440.0	1,440.0	
Supply Boat Cranes	54.4	108.8	108.8	217.6	
Barge Cranes	27.2	54.4	54.4	108.8	
On-shore Disposal (Injection)					
Cuttings Transfer	1.9	4.0	2.9	6.4	EPA assumes that all onshore cuttings injection facility equipment use diesel (Fall 1999 Field Trip)
Cuttings Grinding/Proc.	2.3	4.8	3.5	7.7	
Cuttings Injection	23.4	49.0	35.4	78.6	
Total Power Requirements (per model well) for Seven Selected Energy-Consuming Activities (hp):	24,071.8	48,871.9	35,862.0	77,656.5	These seven energy-consuming activities were selected for inclusion in this table as their air emission factors are given in terms of mass/power-time (g/bhp-hr).

BAT Non-Water Quality Environmental Impacts: BAT Option 2

Region: Offshore Gulf of Mexico (GOM)
Technology: SBF Discharge from BAT Solids Control System (e.g., Cuttings Dryer only at 3.82% CRN) & ZD of fines

Shallow Water Development (SWD) Well Air Emissions

Air Emission Activity	Air Emissions (short tons/model well)					
	NO_x	THC	SO_2	CO	TSP	Total
Baseline and Cuttings Dryer						
Solids Control Equipment						
Diesel Fuel Source	0.3476	0.0278	0.0231	0.0752	0.0248	0.4985
Natural Gas Fuel Source	0.0323	0.0045	0.0000	0.0206	0.0000	0.0574
Solids Control Subtotal	0.3003	0.0243	0.0197	0.0670	0.0211	0.4324
Supply Boats						
Transit	0.1705	0.0731	0.0124	0.0341	0.0144	0.3044
Maneuvering	0.0053	0.0029	0.0004	0.0008	0.0004	0.0097
Loading	0.0096	0.0051	0.0006	0.0014	0.0008	0.0175
Demurrage	0.0222	0.0018	0.0015	0.0048	0.0016	0.0319
Cranes	0.0008	0.0001	0.0001	0.0002	0.0001	0.0012
Barge						
Transit	0.0003	0.0001	0.0000	0.0001	0.0000	0.0006
Cranes	0.0004	0.0000	0.0000	0.0001	0.0000	0.0006
Trucks	0.0002	0.0001	0.0000	0.0002	0.0000	0.0005
On-shore Disposal (Landfarming)						
Wheel Tractor	0.0006	0.0001	0.0000	0.0018	0.0001	0.0026
Dozer/Loader	0.0008	0.0001	0.0001	0.0002	0.0001	0.0013
On-shore Disposal (Injection)						
Cuttings Transfer	0.0000	0.0000	0.0000	0.0000	0.0000	0.0000
Cuttings Grinding/Proc.	0.0000	0.0000	0.0000	0.0000	0.0000	0.0001
Cuttings Injection	0.0004	0.0000	0.0000	0.0001	0.0000	0.0005
Onshore Diposal Subtotal	0.0006	0.0001	0.0000	0.0005	0.0000	0.0013
Total Per Well	0.5103	0.1076	0.0347	0.1090	0.0384	0.8000

Note: On-shore Injection air emissions assume that diesel engines are used for electricity generation

BAT Non-Water Quality Environmental Impacts: BAT Option 2

Region: Offshore Gulf of Mexico (GOM)
Technology: SBF Discharge from BAT Solids Control System (e.g., Cuttings Dryer only at 3.82% CRN) & ZD of fines

Shallow Water Exploratory (SWE) Well Air Emissions

Air Emission Activity	Air Emissions (short tons/model well)					
	NO_x	THC	SO_2	CO	TSP	Total
Baseline and Cuttings Dryer						
Solids Control Equipment						
Diesel Fuel Source	0.7286	0.0583	0.0484	0.1577	0.0520	1.0450
Natural Gas Fuel Source	0.0677	0.0094	0.0001	0.0432	0.0000	0.1203
Solids Control Subtotal	0.6294	0.0509	0.0412	0.1405	0.0442	0.9063
Supply Boats						
Transit	0.1705	0.0731	0.0124	0.0341	0.0144	0.3044
Maneuvering	0.0053	0.0029	0.0004	0.0008	0.0004	0.0097
Loading	0.0106	0.0057	0.0007	0.0015	0.0008	0.0194
Demurrage	0.0222	0.0018	0.0015	0.0048	0.0016	0.0319
Cranes	0.0017	0.0001	0.0001	0.0004	0.0001	0.0024
Barge						
Transit	0.0007	0.0003	0.0000	0.0001	0.0001	0.0012
Cranes	0.0008	0.0001	0.0001	0.0002	0.0001	0.0012
Trucks	0.0002	0.0001	0.0000	0.0002	0.0000	0.0005
On-shore Disposal (Landfarming)						
Wheel Tractor	0.0006	0.0001	0.0000	0.0018	0.0001	0.0026
Dozer/Loader	0.0008	0.0001	0.0001	0.0002	0.0001	0.0013
On-shore Disposal (Injection)						
Cuttings Transfer	0.0001	0.0000	0.0000	0.0000	0.0000	0.0001
Cuttings Grinding/Proc.	0.0001	0.0000	0.0000	0.0000	0.0000	0.0001
Cuttings Injection	0.0008	0.0001	0.0001	0.0002	0.0001	0.0011
Onshore Diposal Subtotal	0.0010	0.0001	0.0001	0.0006	0.0001	0.0018
Total Per Well	0.8425	0.1351	0.0564	0.1831	0.0617	1.2788

Note: On-shore Injection air emissions assume that diesel engines are use for electricity generation

BAT Non-Water Quality Environmental Impacts: BAT Option 2

Region: Offshore Gulf of Mexico (GOM)
Technology: SBF Discharge from BAT Solids Control System (e.g., Cuttings Dryer only at 3.82% CRN) & ZD of fines

Deep Water Development (DWD) Well Air Emissions

Air Emission Activity	Air Emissions (short tons/model well)					
	NO_x	THC	SO_2	CO	TSP	Total
Baseline and Cuttings Dryer						
Solids Control Equipment						
Diesel Fuel Source	0.5280	0.0422	0.0351	0.1143	0.0377	0.7574
Natural Gas Fuel Source	0.0490	0.0068	0.0001	0.0313	0.0000	0.0872
Solids Control Subtotal	0.4562	0.0369	0.0299	0.1018	0.0321	0.6569
Supply Boats						
Transit	0.1705	0.0731	0.0124	0.0341	0.0144	0.3044
Maneuvering	0.0053	0.0029	0.0004	0.0008	0.0004	0.0097
Loading	0.0106	0.0057	0.0007	0.0015	0.0008	0.0194
Demurrage	0.0222	0.0018	0.0015	0.0048	0.0016	0.0319
Cranes	0.0017	0.0001	0.0001	0.0004	0.0001	0.0024
Barge						
Transit	0.0007	0.0003	0.0000	0.0001	0.0001	0.0012
Cranes	0.0008	0.0001	0.0001	0.0002	0.0001	0.0012
Trucks	0.0002	0.0001	0.0000	0.0002	0.0000	0.0005
On-shore Disposal (Landfarming)						
Wheel Tractor	0.0006	0.0001	0.0000	0.0018	0.0001	0.0026
Dozer/Loader	0.0008	0.0001	0.0001	0.0002	0.0001	0.0013
On-shore Disposal (Injection)						
Cuttings Transfer	0.0000	0.0000	0.0000	0.0000	0.0000	0.0001
Cuttings Grinding/Proc.	0.0001	0.0000	0.0000	0.0000	0.0000	0.0001
Cuttings Injection	0.0005	0.0000	0.0000	0.0001	0.0000	0.0008
Onshore Diposal Subtotal	0.0008	0.0001	0.0001	0.0005	0.0001	0.0015
Total Per Well	0.6690	0.1210	0.0451	0.1444	0.0496	1.0291

Note: On-shore Injection air emissions assume that diesel engines are use for electricity generation

BAT Non-Water Quality Environmental Impacts: BAT Option 2

Region: Offshore Gulf of Mexico (GOM)
Technology: SBF Discharge from BAT Solids Control System (e.g., Cuttings Dryer only at 3.82% CRN) & ZD of fines

Deep Water Exploratory (DWE) Well Air Emissions

Air Emission Activity	Air Emissions (short tons/model well)					
	NO_x	THC	SO_2	CO	TSP	Total
Baseline and Cuttings Dryer						
Solids Control Equipment						
Diesel Fuel Source	1.1697	0.0936	0.0778	0.2532	0.0836	1.6778
Natural Gas Fuel Source	0.1086	0.0150	0.0002	0.0693	0.0000	0.1932
Solids Control Subtotal	1.0105	0.0818	0.0661	0.2256	0.0710	1.4551
Supply Boats						
Transit	0.1705	0.0731	0.0124	0.0341	0.0144	0.3044
Maneuvering	0.0053	0.0029	0.0004	0.0008	0.0004	0.0097
Loading	0.0127	0.0069	0.0009	0.0018	0.0010	0.0233
Demurrage	0.0222	0.0018	0.0015	0.0048	0.0016	0.0319
Cranes	0.0034	0.0003	0.0002	0.0007	0.0002	0.0048
Barge						
Transit	0.0013	0.0006	0.0001	0.0003	0.0001	0.0023
Cranes	0.0017	0.0001	0.0001	0.0004	0.0001	0.0024
Trucks	0.0002	0.0001	0.0000	0.0002	0.0000	0.0005
On-shore Disposal (Landfarming)						
Wheel Tractor	0.0006	0.0001	0.0000	0.0018	0.0001	0.0026
Dozer/Loader	0.0008	0.0001	0.0001	0.0002	0.0001	0.0013
On-shore Disposal (Injection)						
Cuttings Transfer	0.0001	0.0000	0.0000	0.0000	0.0000	0.0001
Cuttings Grinding/Proc.	0.0001	0.0000	0.0000	0.0000	0.0000	0.0002
Cuttings Injection	0.0012	0.0001	0.0001	0.0003	0.0001	0.0017
Onshore Diposal Subtotal	0.0014	0.0001	0.0001	0.0006	0.0001	0.0024
Total Per Well	1.2293	0.1676	0.0818	0.2692	0.0890	1.8368

Note: On-shore Injection air emissions assume that diesel engines are use for electricity generation

BAT Non-Water Quality Environmental Impacts: BAT Option 2

Region: Offshore Gulf of Mexico (GOM)
Technology: SBF Discharge from BAT Solids Control System (e.g., Cuttings Dryer only at 3.82% CRN) & ZD of fines

Summary Air Emissions (per model well)

Model Well	Air Emissions (short tons/model well)						
	NO_x	THC	SO_2	CO	TSP	Total	Total Per Day
Shallow Water Development	0.5103	0.1076	0.0347	0.1090	0.0384	0.8000	0.1538
Shallow Water Exploratory	0.8425	0.1351	0.0564	0.1831	0.0617	1.2788	0.1173
Deep Water Development	0.6690	0.1210	0.0451	0.1444	0.0496	1.0291	0.1303
Deep Water Exploratory	1.2293	0.1676	0.0818	0.2692	0.0890	1.8368	0.1050

Summary Fuel Usage (per model well)

Model Well		Fuel Usage Per Model Well		
		Gallons	Barrels of Oil Equivalent (BOE)	Barrels of Oil Equivalent (BOE) per day
Shallow Water Development		2,603.9	62.0	11.9
Shallow Water Exploratory		4,257.6	101.4	9.3
Deep Water Development		3,393.4	80.8	10.2
Deep Water Exploratory		6,182.2	147.2	8.4

Note: 1 BOE = 42 gallons of diesel

BAT Non-Water Quality Environmental Impacts: BAT Option 2

Region: Offshore Gulf of Mexico (GOM)
Technology: SBF Discharge from BAT Solids Control System (e.g., Cuttings Dryer only at 3.82% CRN) & ZD of fines

Daily Drill Rig Emissions

Model Well	Air Emissions (short tons/model well)					
	NO_x	THC	SO_2	CO	TSP	Total
Shallow Water Development	3.1570	1.6954	0.2150	0.4525	0.2475	5.7674
Shallow Water Exploratory	3.1570	1.6954	0.2150	0.4525	0.2475	5.7674
Deep Water Development	3.1570	1.6954	0.2150	0.4525	0.2475	5.7674
Deep Water Exploratory	3.1570	1.6954	0.2150	0.4525	0.2475	5.7674

Note: Drill rig emissions include impacts from all rig daily operations and one helicopter trip to and from the rig.

Daily Drill Rig Fuel Usage

Model Well	gallons per model well	Barrels of Oil Equivalent (BOE) per model well
Shallow Water Development	15,388.0	366.4
Shallow Water Exploratory	15,388.0	366.4
Deep Water Development	15,388.0	366.4
Deep Water Exploratory	15,388.0	366.4
TOTAL	61,552.0	1,465.5

GOM BAT2 Daily Emissions/Fuel Usage

Model Well	SBF (Discharge @ 3.82%)		OBF (Zero Discharge)		WBF (Discharge @ 10.20%)	
	Total Air Emissions (tons)	Barrels of Oil Equivalent (BOE)	Total Air Emissions (tons)	Barrels of Oil Equivalent (BOE)	Total Air Emissions (tons)	Barrels of Oil Equivalent (BOE)
Shallow Water Development	3,817.9914	243,930.3	806.3927	51,528.7	28,885.6052	1,842,243.1
Shallow Water Exploratory	4,746.5830	303,024.3	1,002.9762	64,027.1	35,267.3896	2,249,255.5
Deep Water Development	792.0505	50,578.5	0.0000	0.0	1,007.7722	64,272.9
Deep Water Exploratory	5,035.5166	321,384.2	0.0000	0.0	6,900.1667	440,073.3
TOTAL	**14,392.1**	**918,917.3**	**1,809.4**	**115,555.9**	**72,060.9**	**4,595,844.8**
	88,262.4					
	5,630,318.0					

Note: Summary annual air emission/fuel usage totals assume the following number of GOM SBF wells (existing sources) under this technology option:
124 SWD wells, 74 SWE wells, 17 DWD wells, and 49 DWE wells

Note: Summary annual air emission/fuel usage totals assume the following number of GOM OBF wells (existing sources) under this technology option:
25 SWD wells, 15 SWE wells, 0 DWD wells, and 0 DWE wells

Note: Summary annual air emission/fuel usage totals assume the following number of GOM WBF wells (existing sources) under this technology option:
479 SWD wells, 279 SWE wells, 11 DWD wells, and 34 DWE wells

Note: 1 BOE = 42 gallons of diesel

BAT Non-Water Quality Environmental Impacts: BAT Option 2

Region: Offshore Gulf of Mexico (GOM)
Technology: SBF Discharge from BAT Solids Control System (e.g., Cuttings Dryer only at 3.82% CRN) & ZD of fines

Annual Air Emissions (SBF BAT2 Model Well - Discharging at 3.82% CRN

Model Well	Air Emissions (short tons/model well)					
	NO_x	THC	SO_2	CO	TSP	Total
Shallow Water Development	2,098.9111	1,106.5321	142.9077	305.2924	164.3481	3,817.9914
Shallow Water Exploratory	1,277.1565	662.3836	86.8930	187.6701	99.8073	2,313.9106
Deep Water Development	290.4524	151.9306	19.7689	42.4552	22.7215	527.3287
Deep Water Exploratory	864.6403	440.1983	58.7786	128.4894	67.4222	1,559.5288
Total	**4,531.1603**	**2,361.0446**	**308.3483**	**663.9071**	**354.2991**	

Annual Air Emissions (OBF Baseline Model Well - Zero Discharging at 10.20%CRN)

Model Well	Air Emissions (short tons/model well)					
	NOx	THC	SO2	CO	TSP	Total
Shallow Water Development	443.0487	233.5919	30.2045	64.7911	34.7565	806.3927
Shallow Water Exploratory	550.9498	291.0989	37.5329	80.2084	43.1862	1,002.9762
Deep Water Development	0.0000	0.0000	0.0000	0.0000	0.0000	0.0000
Deep Water Exploratory	0.0000	0.0000	0.0000	0.0000	0.0000	0.0000
Total	**993.9986**	**524.6908**	**67.7374**	**144.9995**	**77.9427**	

Annual Air Emissions (WBF Baseline Model Well - Discharging at 10.20% CRN)

Model Well	Air Emissions (short tons/model well)					
	NO_x	THC	SO_2	CO	TSP	Total
Shallow Water Development	15,780.7080	8,450.1591	1,074.3659	2,266.1832	1,236.7267	28,808.1429
Shallow Water Exploratory	19,267.1877	10,317.0784	1,311.7288	2,766.8579	1,509.9605	35,172.8133
Deep Water Development	550.5635	294.8124	37.4829	79.0635	43.1474	1,005.0697
Deep Water Exploratory	3,769.6809	2,018.5662	256.6435	541.3438	295.4281	6,881.6625
Total	**39,368.1402**	**21,080.6161**	**2,680.2211**	**5,653.4484**	**3,085.2627**	

Note: Summary annual air emissions totals assume the following number of GOM SBF wells (existing sources) under this technology option:
124 SWD wells, 74 SWE wells, 17 DWD wells, and 49 DWE wells

Note: Summary annual air emissions totals assume the following number of GOM OBF wells (existing sources) under this technology option:
25 SWD wells, 15 SWE wells, 0 DWD wells, and 0 DWE wells

Note: Summary annual air emissions totals assume the following number of GOM WBF wells (existing sources) under this technology option:
479 SWD wells, 279 SWE wells, 11 DWD wells, and 34 DWE wells

BAT Non-Water Quality Environmental Impacts: BAT Option 2

Region: Offshore California

Technology: SBF Discharge from BAT Solids Control System (e.g., Cuttings Dryer only at 3.82% CRN) & ZD of fines

Fuel-Consuming Activity	Diesel Fuel Consumed (gal/model well)				Note
	Shallow Water		Deep Water		(All information below is detailed in EPA, 2000 unless otherwise noted.)
	Development	Exploratory	Development	Exploratory	
Cuttings Dryer Discharge					
Baseline Solids Control Equipment	748.8	1,569.6	1,137.6	2,520.0	Baseline equipment fuel usage is 6 gal-diesel/hr
Improved Solids Control Equipment (e.g., Cuttings Dryer)	748.8	1,569.6	1,137.6	2,520.0	Cuttings dryer equipment fuel usage is 6 gal-diesel/hr
Zero Discharge of Fines					
Regular Supply Boat Transit	0.0	0.0	0.0	0.0	EPA assumes that the volume of fines waste can be managed via regular supply boats
Dedicated Supply Boat Transit	0.0	0.0	0.0	0.0	
Total Supply Boat Transit	0.0	0.0	0.0	0.0	
Barge Transit	0.0	0.0	0.0	0.0	
Supply Boat Maneuvering	25.3	25.3	25.3	25.3	
Dedicated Supply Boat Loading	0.0	0.0	0.0	0.0	EPA assumes that the volume of fines waste can be managed via regular supply boats
Regular Supply Boat Loading	45.5	50.6	50.6	60.7	
Supply Boat Auxiliary Generator (in Port Demurrage)	144.0	144.0	144.0	144.0	
Supply Boat Cranes	3.3	6.7	6.7	13.3	
Barge Cranes	0.0	0.0	0.0	0.0	
Trucks	75.0	75.0	75.0	150.0	
Subtotal	1,790.8	3,440.8	2,576.8	5,433.3	

BAT Non-Water Quality Environmental Impacts: BAT Option 2

Region: Offshore California

Technology: SBF Discharge from BAT Solids Control System (e.g., Cuttings Dryer only at 3.82% CRN) & ZD of fines

Fuel-Consuming Activity	Diesel Fuel Consumed (gal/model well)				Note (All information below is detailed in EPA, 2000 unless otherwise noted.)
	Shallow Water		Deep Water		
	Development	Exploratory	Development	Exploratory	
Zero Discharge of Fines (cont.)					
On-shore Disposal (Landfarming)					
Wheel Tractor for Grading at Landfarm	1.7	1.7	1.7	1.7	
Dozer/Loader for Spreading Waste at Landfarm	44.0	44.0	44.0	44.0	
On-shore Landfarming Subtotal:	45.7	45.7	45.7	45.7	
On-shore Disposal (Injection)					
Cuttings Transfer	0.1	0.2	0.2	0.4	Hours of operation equals the cuttings waste volume divided by cuttings injection rate (bbl/hr). The transfer equipment utilizes one (1) 100 hp vacuum pump.
Cuttings Grinding/Processing	0.1	0.2	0.2	0.4	Hours of operation equals the cuttings waste volume divided by cuttings injection rate (bbl/hr). Total power utilized by the grinding and processing equipment is 120 hp.
Cuttings Injection	0.1	0.2	0.2	0.4	Hours of operation equals the cuttings waste volume divided by cuttings injection rate (bbl/hr).
On-shore Injection Subtotal:	0.3	0.7	0.5	1.2	
On-shore Disposal Subtotal:	9.4	9.7	9.5	10.1	Weighted average using landfarming/on-shore injection percentage split (20%/80%) of offshore wastes sent on-shore
TOTAL Diesel Per Well (Gal)	1,800.2	3,450.5	2,586.3	5,443.4	

BAT Non-Water Quality Environmental Impacts: BAT Option 2

Region: Offshore California

Technology: SBF Discharge from BAT Solids Control System (e.g., Cuttings Dryer only at 3.82% CRN) & ZD of fines

Energy-Consuming Activity	Energy Requirements (hp-hr/model well)				Note (All information below is detailed in EPA, 2000 unless otherwise noted.)
	Shallow Water		Deep Water		
	Development	Exploratory	Development	Exploratory	
Baseline Solids Control Equipment	8,424.0	17,658.0	12,798.0	28,350.0	Baseline equipment include: 4 x 5 hp primary shale shakers, 4 x 5 hp secondary shale shakers, and 1 x 27.5 hp fines removal unit (avg of 5 hp mud cleaner and 50 hp decanting centrifuge).
Improved Solids Control Equipment (e.g., Cuttings Dryer)	14,098.7	29,553.0	21,419.1	47,447.4	Average of MUD-10 (38.22 hp) and vertical centrifuge (187.72 hp)
Supply Boat Auxiliary Generator (in Port Demurrage)	1,440.0	1,440.0	1,440.0	1,440.0	
Supply Boat Cranes	54.4	108.8	108.8	217.6	
Barge Cranes	0.0	0.0	0.0	0.0	
On-shore Disposal (Injection)					EPA assumes that all onshore cuttings injection facility equipment use diesel (Fall 1999 Field Trip)
Cuttings Transfer	1.9	4.0	2.9	6.4	
Cuttings Grinding/Proc.	2.3	4.8	3.5	7.7	
Cuttings Injection	23.4	49.0	35.4	78.6	
Total Power Requirements (per model well) for Seven Selected Energy-Consuming Activities (hp):	24,044.6	48,817.5	35,807.6	77,547.7	These seven energy-consuming activities were selected for inclusion in this table as their air emission factors are given in terms of mass/power-time (g/bhp-hr).

BAT Non-Water Quality Environmental Impacts: BAT Option 2

Region: Offshore California
Technology: SBF Discharge from BAT Solids Control System (e.g., Cuttings Dryer only at 3.82% CRN) & ZD of fines

Shallow Water Development (SWD) Well Air Emissions

Air Emission Activity	Air Emissions (short tons/model well)					
	NO_x	THC	SO_2	CO	TSP	Total
Baseline and Cuttings Dryer						
Solids Control Equipment						
Diesel Fuel Source	0.3476	0.0278	0.0231	0.0752	0.0248	0.4985
Natural Gas Fuel Source	0.0323	0.0045	0.0000	0.0206	0.0000	0.0574
Solids Control Subtotal	0.0323	0.0045	0.0000	0.0206	0.0000	0.0574
Supply Boats						
Transit	0.0000	0.0000	0.0000	0.0000	0.0000	0.0000
Maneuvering	0.0053	0.0029	0.0004	0.0008	0.0004	0.0097
Loading	0.0096	0.0051	0.0006	0.0014	0.0008	0.0175
Demurrage	0.0222	0.0018	0.0015	0.0048	0.0016	0.0319
Cranes	0.0008	0.0001	0.0001	0.0002	0.0001	0.0012
Barge						
Transit	0.0000	0.0000	0.0000	0.0000	0.0000	0.0000
Cranes	0.0000	0.0000	0.0000	0.0000	0.0000	0.0000
Trucks	0.0037	0.0008	0.0000	0.0028	0.0000	0.0074
On-shore Disposal (Landfarming)						
Wheel Tractor	0.0006	0.0001	0.0000	0.0018	0.0001	0.0026
Dozer/Loader	0.0008	0.0001	0.0001	0.0002	0.0001	0.0013
On-shore Disposal (Injection)						
Cuttings Transfer	0.0000	0.0000	0.0000	0.0000	0.0000	0.0000
Cuttings Grinding/Proc.	0.0000	0.0000	0.0000	0.0000	0.0000	0.0001
Cuttings Injection	0.0004	0.0000	0.0000	0.0001	0.0000	0.0005
Onshore Diposal Subtotal	0.0006	0.0001	0.0000	0.0005	0.0000	0.0013
Total Per Well	0.0745	0.0152	0.0026	0.0310	0.0029	0.1263

Note: On-shore Injection air emissions assume that diesel engines are used for electricity generation

BAT Non-Water Quality Environmental Impacts: BAT Option 2

Region: Offshore California
Technology: SBF Discharge from BAT Solids Control System (e.g., Cuttings Dryer only at 3.82% CRN) & ZD of fines

Shallow Water Exploratory (SWE) Well Air Emissions

Air Emission Activity	Air Emissions (short tons/model well)					
	NO_x	THC	SO_2	CO	TSP	Total
Baseline and Cuttings Dryer						
Solids Control Equipment						
Diesel Fuel Source	0.7286	0.0583	0.0484	0.1577	0.0520	1.0450
Natural Gas Fuel Source	0.0677	0.0094	0.0001	0.0432	0.0000	0.1203
Solids Control Subtotal	0.0677	0.0094	0.0001	0.0432	0.0000	0.1203
Supply Boats						
Transit	0.0000	0.0000	0.0000	0.0000	0.0000	0.0000
Maneuvering	0.0053	0.0029	0.0004	0.0008	0.0004	0.0097
Loading	0.0106	0.0057	0.0007	0.0015	0.0008	0.0194
Demurrage	0.0222	0.0018	0.0015	0.0048	0.0016	0.0319
Cranes	0.0017	0.0001	0.0001	0.0004	0.0001	0.0024
Barge						
Transit	0.0000	0.0000	0.0000	0.0000	0.0000	0.0000
Cranes	0.0000	0.0000	0.0000	0.0000	0.0000	0.0000
Trucks	0.0037	0.0008	0.0000	0.0028	0.0000	0.0074
On-shore Disposal (Landfarming)						
Wheel Tractor	0.0006	0.0001	0.0000	0.0018	0.0001	0.0026
Dozer/Loader	0.0008	0.0001	0.0001	0.0002	0.0001	0.0013
On-shore Disposal (Injection)						
Cuttings Transfer	0.0001	0.0000	0.0000	0.0000	0.0000	0.0001
Cuttings Grinding/Proc.	0.0001	0.0000	0.0000	0.0000	0.0000	0.0001
Cuttings Injection	0.0008	0.0001	0.0001	0.0002	0.0001	0.0011
Onshore Diposal Subtotal	0.0010	0.0001	0.0001	0.0006	0.0001	0.0018
Total Per Well	0.1122	0.0208	0.0028	0.0540	0.0030	0.1929

Note: On-shore Injection air emissions assume that diesel engines are use for electricity generation

BAT Non-Water Quality Environmental Impacts: BAT Option 2

Region: Offshore California
Technology: SBF Discharge from BAT Solids Control System (e.g., Cuttings Dryer only at 3.82% CRN) & ZD of fines

Deep Water Development (DWD) Well Air Emissions

Air Emission Activity	Air Emissions (short tons/model well)					
	NO_x	THC	SO_2	CO	TSP	Total
Baseline and Cuttings Dryer						
Solids Control Equipment						
Diesel Fuel Source	0.5280	0.0422	0.0351	0.1143	0.0377	0.7574
Natural Gas Fuel Source	0.0490	0.0068	0.0001	0.0313	0.0000	0.0872
Solids Control Subtotal	0.0490	0.0068	0.0001	0.0313	0.0000	0.0872
Supply Boats						
Transit	0.0000	0.0000	0.0000	0.0000	0.0000	0.0000
Maneuvering	0.0053	0.0029	0.0004	0.0008	0.0004	0.0097
Loading	0.0106	0.0057	0.0007	0.0015	0.0008	0.0194
Demurrage	0.0222	0.0018	0.0015	0.0048	0.0016	0.0319
Cranes	0.0017	0.0001	0.0001	0.0004	0.0001	0.0024
Barge						
Transit	0.0000	0.0000	0.0000	0.0000	0.0000	0.0000
Cranes	0.0000	0.0000	0.0000	0.0000	0.0000	0.0000
Trucks	0.0037	0.0008	0.0000	0.0028	0.0000	0.0074
On-shore Disposal (Landfarming)						
Wheel Tractor	0.0006	0.0001	0.0000	0.0018	0.0001	0.0026
Dozer/Loader	0.0008	0.0001	0.0001	0.0002	0.0001	0.0013
On-shore Disposal (Injection)						
Cuttings Transfer	0.0000	0.0000	0.0000	0.0000	0.0000	0.0001
Cuttings Grinding/Proc.	0.0001	0.0000	0.0000	0.0000	0.0000	0.0001
Cuttings Injection	0.0005	0.0000	0.0000	0.0001	0.0000	0.0008
Onshore Diposal Subtotal	0.0008	0.0001	0.0001	0.0005	0.0001	0.0015
Total Per Well	0.0934	0.0182	0.0028	0.0421	0.0030	0.1595

Note: On-shore Injection air emissions assume that diesel engines are use for electricity generation

BAT Non-Water Quality Environmental Impacts: BAT Option 2

Region: Offshore California
Technology: SBF Discharge from BAT Solids Control System (e.g., Cuttings Dryer only at 3.82% CRN) & ZD of fines

Deep Water Exploratory (DWE) Well Air Emissions

Air Emission Activity	Air Emissions (short tons/model well)					
	NO_x	THC	SO_2	CO	TSP	Total
Baseline and Cuttings Dryer						
Solids Control Equipment						
Diesel Fuel Source	1.1697	0.0936	0.0778	0.2532	0.0836	1.6778
Natural Gas Fuel Source	0.1086	0.0150	0.0002	0.0693	0.0000	0.1932
Solids Control Subtotal	0.1086	0.0150	0.0002	0.0693	0.0000	0.1932
Supply Boats						
Transit	0.0000	0.0000	0.0000	0.0000	0.0000	0.0000
Maneuvering	0.0053	0.0029	0.0004	0.0008	0.0004	0.0097
Loading	0.0127	0.0069	0.0009	0.0018	0.0010	0.0233
Demurrage	0.0222	0.0018	0.0015	0.0048	0.0016	0.0319
Cranes	0.0034	0.0003	0.0002	0.0007	0.0002	0.0048
Barge						
Transit	0.0000	0.0000	0.0000	0.0000	0.0000	0.0000
Cranes	0.0000	0.0000	0.0000	0.0000	0.0000	0.0000
Trucks	0.0074	0.0016	0.0000	0.0056	0.0000	0.0147
On-shore Disposal (Landfarming)						
Wheel Tractor	0.0006	0.0001	0.0000	0.0018	0.0001	0.0026
Dozer/Loader	0.0008	0.0001	0.0001	0.0002	0.0001	0.0013
On-shore Disposal (Injection)						
Cuttings Transfer	0.0001	0.0000	0.0000	0.0000	0.0000	0.0001
Cuttings Grinding/Proc.	0.0001	0.0000	0.0000	0.0000	0.0000	0.0002
Cuttings Injection	0.0012	0.0001	0.0001	0.0003	0.0001	0.0017
Onshore Diposal Subtotal	0.0014	0.0001	0.0001	0.0006	0.0001	0.0024
Total Per Well	0.1611	0.0286	0.0032	0.0837	0.0034	0.2800

Note: On-shore Injection air emissions assume that diesel engines are use for electricity generation

BAT Non-Water Quality Environmental Impacts: BAT Option 2

Region: Offshore California
Technology: SBF Discharge from BAT Solids Control System (e.g., Cuttings Dryer only at 3.82% CRN) & ZD of fines

Summary Air Emissions (per model well)

Model Well	Air Emissions (short tons/model well)						
	NO_x	THC	SO_2	CO	TSP	Total	Total Per Day
Shallow Water Development	0.0745	0.0152	0.0026	0.0310	0.0029	0.1263	0.0243
Shallow Water Exploratory	0.1122	0.0208	0.0028	0.0540	0.0030	0.1929	0.0177
Deep Water Development	0.0934	0.0182	0.0028	0.0421	0.0030	0.1595	0.0202
Deep Water Exploratory	0.1611	0.0286	0.0032	0.0837	0.0034	0.2800	0.0160

Summary Fuel Usage (per model well)

Model Well		Fuel Usage Per Model Well		
		Gallons	Barrels of Oil Equivalent (BOE)	Barrels of Oil Equivalent (BOE) per day
Shallow Water Development		1,800.2	42.9	8.2
Shallow Water Exploratory		3,450.5	82.2	7.5
Deep Water Development		2,586.3	61.6	7.8
Deep Water Exploratory		5,443.4	129.6	7.4

Note: 1 BOE = 42 gallons of diesel

BAT Non-Water Quality Environmental Impacts: BAT Option 2

Region: Offshore California
Technology: SBF Discharge from BAT Solids Control System (e.g., Cuttings Dryer only at 3.82% CRN) & ZD of fines

Daily Drill Rig Emissions

Model Well	Air Emissions (short tons/model well)					
	NO_x	THC	SO_2	CO	TSP	Total
Shallow Water Development	3.1570	1.6954	0.2150	0.4525	0.2475	5.7674
Shallow Water Exploratory	3.1570	1.6954	0.2150	0.4525	0.2475	5.7674
Deep Water Development	3.1570	1.6954	0.2150	0.4525	0.2475	5.7674
Deep Water Exploratory	3.1570	1.6954	0.2150	0.4525	0.2475	5.7674

Note: Drill rig emissions include impacts from all rig daily operations and one helicopter trip to and from the rig.

Daily Drill Rig Fuel Usage

Model Well	gallons per model well	Barrels of Oil Equivalent (BOE) per model well
Shallow Water Development	15,388.0	366.4
Shallow Water Exploratory	15,388.0	366.4
Deep Water Development	15,388.0	366.4
Deep Water Exploratory	15,388.0	366.4
TOTAL	61,552.0	1,465.5

CA BAT2 Daily Emissions/Fuel Usage

Model Well	SBF (Discharge @ 3.82%)		WBF (Discharge @ 10.20%)		OBF (Zero Discharge)	
	Total Air Emissions (tons)	Barrels of Oil Equivalent (BOE)	Total Air Emissions (tons)	Barrels of Oil Equivalent (BOE)	Total Air Emissions (tons)	Barrels of Oil Equivalent (BOE)
Shallow Water Development	0.0000	0.0	180.9119	11,538.1	30.5288	1,986.8
Shallow Water Exploratory	0.0000	0.0	252.8128	16,123.7	63.8108	4,151.8
Deep Water Development	0.0000	0.0	0.000	0.0	0.0000	0.0
Deep Water Exploratory	0.0000	0.0	0.0000	0.0	0.0000	0.0
TOTAL	**0.0**	**0.0**	**433.7**	**27,661.8**	**94.3**	**6,138.6**
			528.1			
			33,800.3			

Note: Summary annual air emission/fuel usage totals assume the following number of SBF wells (existing sources) under this technology option:
0 SWD wells, 0 SWE wells, 0 DWD wells, and 0 DWE wells

Note: Summary annual air emission/fuel usage totals assume the following number of OBF wells (existing sources) under this technology option:
1 SWD wells, 1 SWE wells, 0 DWD wells, and 0 DWE wells

Note: Summary annual air emission/fuel usage totals assume the following number of WBF wells (existing sources) for baseline current practice
3 SWD wells, 2 SWE wells, 0 DWD wells, and 0 DWE wells

Note: 1 BOE = 42 gallons of diesel

BAT Non-Water Quality Environmental Impacts: BAT Option 2

Region: Offshore California
Technology: SBF Discharge from BAT Solids Control System (e.g., Cuttings Dryer only at 3.82% CRN) & ZD of fines

Annual Air Emissions (SBF BAT2 Model Well - Discharging at 3.82% CRN

Model Well	Air Emissions (short tons/model well)					
	NO_x	THC	SO_2	CO	TSP	Total
Shallow Water Development	0.0000	0.0000	0.0000	0.0000	0.0000	0.0000
Shallow Water Exploratory	0.0000	0.0000	0.0000	0.0000	0.0000	0.0000
Deep Water Development	0.0000	0.0000	0.0000	0.0000	0.0000	0.0000
Deep Water Exploratory	0.0000	0.0000	0.0000	0.0000	0.0000	0.0000
Total	**0.0000**	**0.0000**	**0.0000**	**0.0000**	**0.0000**	

Annual Air Emissions (OBF Baseline Model Well - Zero Discharging at 10.20% CRN)

Model Well	Air Emissions (short tons/model well)					
	NOx	THC	SO2	CO	TSP	Total
Shallow Water Development	16.7158	8.9378	1.1344	2.4347	1.3061	30.5288
Shallow Water Exploratory	16.9423	18.6914	2.3705	5.0824	2.7293	45.8159
Deep Water Development	0.0000	0.0000	0.0000	0.0000	0.0000	0.0000
Deep Water Exploratory	0.0000	0.0000	0.0000	0.0000	0.0000	0.0000
Total	**33.6581**	**27.6292**	**3.5050**	**7.5171**	**4.0353**	

Annual Air Emissions (WBF Baseline Model Well - Discharging at 10.20% CRN)

Model Well	Air Emissions (short tons/model well)					
	NO_x	THC	SO_2	CO	TSP	Total
Shallow Water Development	98.8353	52.9238	6.7288	14.1932	7.7457	180.4268
Shallow Water Exploratory	138.1160	73.9576	9.4031	19.8341	10.8241	252.1349
Deep Water Development	0.0000	0.0000	0.0000	0.0000	0.0000	0.0000
Deep Water Exploratory	0.0000	0.0000	0.0000	0.0000	0.0000	0.0000
Total	**236.9514**	**126.8813**	**16.1319**	**34.0273**	**18.5698**	

Note: Summary annual air emissions totals assume the following number of SBF wells (existing sources) under this technology option:
0 SWD wells, 0 SWE wells, 0 DWD wells, and 0 DWE wells

Note: Summary annual air emissions totals assume the following number of OBF wells (existing sources) under this technology option:
1 SWD wells, 1 SWE wells, 0 DWD wells, and 0 DWE wells

Note: Summary annual air emissions totals assume the following number of WBF wells (existing sources) for baseline current practice
3 SWD wells, 2 SWE wells, 0 DWD wells, and 0 DWE wells

BAT Non-Water Quality Environmental Impacts: BAT Option 2

Region: Cook Inlet, AK

Technology: SBF Discharge from BAT Solids Control System (e.g., Cuttings Dryer only at 3.82%CRN) & ZD of fines

Fuel-Consuming Activity	Diesel Fuel Consumed (gal/model well)				Note
	Shallow Water		Deep Water		(All information below is detailed in EPA, 2000 unless otherwise noted.)
	Development	Exploratory	Development	Exploratory	
Cuttings Dryer Discharge					
Baseline Solids Control Equipment	748.8	1,569.6	1,137.6	2,520.0	Baseline equipment fuel usage is 6 gal-diesel/hr
Improved Solids Control Equipment (e.g., Cuttings Dryer)	748.8	1,569.6	1,137.6	2,520.0	Cuttings dryer equipment fuel usage is 6 gal-diesel/hr
Zero Discharge of Fines					
Regular Supply Boat Transit	0.0	0.0	0.0	0.0	EPA assumes that the volume of fines waste can be managed via regular supply boats
Dedicated Supply Boat Transit	0.0	0.0	0.0	0.0	
Total Supply Boat Transit	0.0	0.0	0.0	0.0	
Barge Transit	0.0	0.0	0.0	0.0	
Supply Boat Maneuvering	25.3	25.3	25.3	25.3	
Dedicated Supply Boat Loading	0.0	0.0	0.0	0.0	EPA assumes that the volume of fines waste can be managed via regular supply boats
Regular Supply Boat Loading	55.7	75.9	65.8	96.1	
Supply Boat Auxiliary Generator (in Port Demurrage)	144.0	144.0	144.0	144.0	
Supply Boat Cranes	10.0	23.3	16.7	36.7	
Barge Cranes	0.0	0.0	0.0	0.0	
Trucks	550.0	550.0	550.0	1,100.0	
Subtotal	2,282.6	3,957.7	3,076.9	6,442.1	

BAT Non-Water Quality Environmental Impacts: BAT Option 2

Region: Cook Inlet, AK
Technology: SBF Discharge from BAT Solids Control System (e.g., Cuttings Dryer only at 3.82%CRN) & ZD of fines

Fuel-Consuming Activity	Diesel Fuel Consumed (gal/model well)				Note (All information below is detailed in EPA, 2000 unless otherwise noted.)
	Shallow Water		Deep Water		
	Development	Exploratory	Development	Exploratory	
Zero Discharge of Fines (cont.)					
On-shore Disposal (Landfarming)					
Wheel Tractor for Grading at Landfarm	1.7	1.7	1.7	1.7	
Dozer/Loader for Spreading Waste at Landfarm	44.0	44.0	44.0	44.0	
On-shore Landfarming Subtotal:	45.7	45.7	45.7	45.7	
On-shore Disposal (Injection)					
Cuttings Transfer	0.1	0.2	0.2	0.4	Hours of operation equals the cuttings waste volume divided by cuttings injection rate (bbl/hr). The transfer equipment utilizes one (1) 100 hp vacuum pump.
Cuttings Grinding/Processing	0.1	0.2	0.2	0.4	Hours of operation equals the cuttings waste volume divided by cuttings injection rate (bbl/hr). Total power utilized by the grinding and processing equipment is 120 hp.
Cuttings Injection	0.1	0.2	0.2	0.4	Hours of operation equals the cuttings waste volume divided by cuttings injection rate (bbl/hr).
On-shore Injection Subtotal:	0.3	0.7	0.5	1.2	
On-shore Disposal Subtotal:	0.0	0.0	0.0	0.0	Weighted average using landfarming/on-shore injection percentage split (0%/0%) of offshore wastes sent on-shore
TOTAL Diesel Per Well (Gal)	2,282.6	3,957.7	3,076.9	6,442.1	

BAT Non-Water Quality Environmental Impacts: BAT Option 2

Region: Cook Inlet, AK

Technology: SBF Discharge from BAT Solids Control System (e.g., Cuttings Dryer only at 3.82%CRN) & ZD of fines

Energy-Consuming Activity	Energy Requirements (hp-hr/model well)				Note (All information below is detailed in EPA, 2000 unless otherwise noted.)
	Shallow Water		Deep Water		
	Development	Exploratory	Development	Exploratory	
Baseline Solids Control Equipment	8,424.0	17,658.0	12,798.0	28,350.0	Baseline equipment include: 4 x 5 hp primary shale shakers, 4 x 5 hp secondary shale shakers, and 1 x 27.5 hp fines removal unit (avg of 5 hp mud cleaner and 50 hp decanting centrifuge).
Improved Solids Control Equipment (e.g., Cuttings Dryer)	14,098.7	29,553.0	21,419.1	47,447.4	Average of MUD-10 (38.22 hp) and vertical centrifuge (187.72 hp)
Supply Boat Auxiliary Generator (in Port Demurrage)	1,440.0	1,440.0	1,440.0	1,440.0	
Supply Boat Cranes	163.2	380.8	272.0	598.4	
Barge Cranes	0.0	0.0	0.0	0.0	
On-shore Disposal (Injection)					
Cuttings Transfer	1.9	4.0	2.9	6.4	EPA assumes that all onshore cuttings injection facility equipment use diesel (Fall 1999 Field Trip)
Cuttings Grinding/Proc.	2.3	4.8	3.5	7.7	
Cuttings Injection	23.4	49.0	35.4	78.6	
Total Power Requirements (per model well) for Seven Selected Energy-Consuming Activities (hp):	24,153.4	49,089.5	35,970.8	77,928.5	These seven energy-consuming activities were selected for inclusion in this table as their air emission factors are given in terms of mass/power-time (g/bhp-hr).

BAT Non-Water Quality Environmental Impacts: BAT Option 2

Region: Cook Inlet, AK
Technology: SBF Discharge from BAT Solids Control System (e.g., Cuttings Dryer only at 3.82%CRN) & ZD of fines

Shallow Water Development (SWD) Well Air Emissions

Air Emission Activity	Air Emissions (short tons/model well)					
	NO_x	THC	SO_2	CO	TSP	Total
Baseline and Cuttings Dryer						
Solids Control Equipment						
Diesel Fuel Source	0.3476	0.0278	0.0231	0.0752	0.0248	0.4985
Natural Gas Fuel Source	0.0323	0.0045	0.0000	0.0206	0.0000	0.0574
Solids Control Subtotal	0.0323	0.0045	0.0000	0.0206	0.0000	0.0574
Supply Boats						
Transit	0.0000	0.0000	0.0000	0.0000	0.0000	0.0000
Maneuvering	0.0053	0.0029	0.0004	0.0008	0.0004	0.0097
Loading	0.0117	0.0063	0.0008	0.0017	0.0009	0.0213
Demurrage	0.0222	0.0018	0.0015	0.0048	0.0016	0.0319
Cranes	0.0025	0.0002	0.0002	0.0005	0.0002	0.0036
Barge						
Transit	0.0000	0.0000	0.0000	0.0000	0.0000	0.0000
Cranes	0.0000	0.0000	0.0000	0.0000	0.0000	0.0000
Trucks	0.0272	0.0060	0.0000	0.0207	0.0000	0.0540
On-shore Disposal (Landfarming)						
Wheel Tractor	0.0006	0.0001	0.0000	0.0018	0.0001	0.0026
Dozer/Loader	0.0008	0.0001	0.0001	0.0002	0.0001	0.0013
On-shore Disposal (Injection)						
Cuttings Transfer	0.0000	0.0000	0.0000	0.0000	0.0000	0.0000
Cuttings Grinding/Proc.	0.0000	0.0000	0.0000	0.0000	0.0000	0.0001
Cuttings Injection	0.0004	0.0000	0.0000	0.0001	0.0000	0.0005
Onshore Diposal Subtotal	0.0000	0.0000	0.0000	0.0000	0.0000	0.0000
Total Per Well	0.1012	0.0216	0.0028	0.0491	0.0031	0.1779

Note: On-shore Injection air emissions assume that diesel engines are used for electricity generation

BAT Non-Water Quality Environmental Impacts: BAT Option 2

Region: Cook Inlet, AK
Technology: SBF Discharge from BAT Solids Control System (e.g., Cuttings Dryer only at 3.82%CRN) & ZD of fines

Shallow Water Exploratory (SWE) Well Air Emissions

Air Emission Activity	Air Emissions (short tons/model well)					
	NO_x	THC	SO_2	CO	TSP	Total
Baseline and Cuttings Dryer						
Solids Control Equipment						
Diesel Fuel Source	0.7286	0.0583	0.0484	0.1577	0.0520	1.0450
Natural Gas Fuel Source	0.0677	0.0094	0.0001	0.0432	0.0000	0.1203
Solids Control Subtotal	0.0677	0.0094	0.0001	0.0432	0.0000	0.1203
Supply Boats						
Transit	0.0000	0.0000	0.0000	0.0000	0.0000	0.0000
Maneuvering	0.0053	0.0029	0.0004	0.0008	0.0004	0.0097
Loading	0.0159	0.0086	0.0011	0.0023	0.0013	0.0291
Demurrage	0.0222	0.0018	0.0015	0.0048	0.0016	0.0319
Cranes	0.0059	0.0005	0.0004	0.0013	0.0004	0.0084
Barge						
Transit	0.0000	0.0000	0.0000	0.0000	0.0000	0.0000
Cranes	0.0000	0.0000	0.0000	0.0000	0.0000	0.0000
Trucks	0.0272	0.0060	0.0000	0.0207	0.0000	0.0540
On-shore Disposal (Landfarming)						
Wheel Tractor	0.0006	0.0001	0.0000	0.0018	0.0001	0.0026
Dozer/Loader	0.0008	0.0001	0.0001	0.0002	0.0001	0.0013
On-shore Disposal (Injection)						
Cuttings Transfer	0.0001	0.0000	0.0000	0.0000	0.0000	0.0001
Cuttings Grinding/Proc.	0.0001	0.0000	0.0000	0.0000	0.0000	0.0001
Cuttings Injection	0.0008	0.0001	0.0001	0.0002	0.0001	0.0011
Onshore Diposal Subtotal	0.0000	0.0000	0.0000	0.0000	0.0000	0.0000
Total Per Well	0.1442	0.0291	0.0034	0.0730	0.0037	0.2534

Note: On-shore Injection air emissions assume that diesel engines are use for electricity generation

BAT Non-Water Quality Environmental Impacts: BAT Option 2

Region: Cook Inlet, AK
Technology: SBF Discharge from BAT Solids Control System (e.g., Cuttings Dryer only at 3.82%CRN) & ZD of fines

Deep Water Development (DWD) Well Air Emissions

Air Emission Activity	Air Emissions (short tons/model well)					
	NO_x	THC	SO_2	CO	TSP	Total
Baseline and Cuttings Dryer						
Solids Control Equipment						
Diesel Fuel Source	0.5280	0.0422	0.0351	0.1143	0.0377	0.7574
Natural Gas Fuel Source	0.0490	0.0068	0.0001	0.0313	0.0000	0.0872
Solids Control Subtotal	0.0490	0.0068	0.0001	0.0313	0.0000	0.0872
Supply Boats						
Transit	0.0000	0.0000	0.0000	0.0000	0.0000	0.0000
Maneuvering	0.0053	0.0029	0.0004	0.0008	0.0004	0.0097
Loading	0.0138	0.0074	0.0009	0.0020	0.0011	0.0252
Demurrage	0.0222	0.0018	0.0015	0.0048	0.0016	0.0319
Cranes	0.0042	0.0003	0.0003	0.0009	0.0003	0.0060
Barge						
Transit	0.0000	0.0000	0.0000	0.0000	0.0000	0.0000
Cranes	0.0000	0.0000	0.0000	0.0000	0.0000	0.0000
Trucks	0.0272	0.0060	0.0000	0.0207	0.0000	0.0540
On-shore Disposal (Landfarming)						
Wheel Tractor	0.0006	0.0001	0.0000	0.0018	0.0001	0.0026
Dozer/Loader	0.0008	0.0001	0.0001	0.0002	0.0001	0.0013
On-shore Disposal (Injection)						
Cuttings Transfer	0.0000	0.0000	0.0000	0.0000	0.0000	0.0001
Cuttings Grinding/Proc.	0.0001	0.0000	0.0000	0.0000	0.0000	0.0001
Cuttings Injection	0.0005	0.0000	0.0000	0.0001	0.0000	0.0008
Onshore Diposal Subtotal	0.0000	0.0000	0.0000	0.0000	0.0000	0.0000
Total Per Well	0.1218	0.0252	0.0031	0.0604	0.0034	0.2140

Note: On-shore Injection air emissions assume that diesel engines are use for electricity generation

BAT Non-Water Quality Environmental Impacts: BAT Option 2

Region: Cook Inlet, AK
Technology: SBF Discharge from BAT Solids Control System (e.g., Cuttings Dryer only at 3.82%CRN) & ZD of fines

Deep Water Exploratory (DWE) Well Air Emissions

Air Emission Activity	Air Emissions (short tons/model well)					
	NO_x	THC	SO_2	CO	TSP	Total
Baseline and Cuttings Dryer						
Solids Control Equipment						
Diesel Fuel Source	1.1697	0.0936	0.0778	0.2532	0.0836	1.6778
Natural Gas Fuel Source	0.1086	0.0150	0.0002	0.0693	0.0000	0.1932
Solids Control Subtotal	0.1086	0.0150	0.0002	0.0693	0.0000	0.1932
Supply Boats						
Transit	0.0000	0.0000	0.0000	0.0000	0.0000	0.0000
Maneuvering	0.0053	0.0029	0.0004	0.0008	0.0004	0.0097
Loading	0.0202	0.0109	0.0014	0.0029	0.0016	0.0369
Demurrage	0.0222	0.0018	0.0015	0.0048	0.0016	0.0319
Cranes	0.0092	0.0007	0.0006	0.0020	0.0007	0.0132
Barge						
Transit	0.0000	0.0000	0.0000	0.0000	0.0000	0.0000
Cranes	0.0000	0.0000	0.0000	0.0000	0.0000	0.0000
Trucks	0.0545	0.0121	0.0000	0.0414	0.0000	0.1079
On-shore Disposal (Landfarming)						
Wheel Tractor	0.0006	0.0001	0.0000	0.0018	0.0001	0.0026
Dozer/Loader	0.0008	0.0001	0.0001	0.0002	0.0001	0.0013
On-shore Disposal (Injection)						
Cuttings Transfer	0.0001	0.0000	0.0000	0.0000	0.0000	0.0001
Cuttings Grinding/Proc.	0.0001	0.0000	0.0000	0.0000	0.0000	0.0002
Cuttings Injection	0.0012	0.0001	0.0001	0.0003	0.0001	0.0017
Onshore Diposal Subtotal	0.0000	0.0000	0.0000	0.0000	0.0000	0.0000
Total Per Well	0.2200	0.0434	0.0040	0.1212	0.0043	0.3928

Note: On-shore Injection air emissions assume that diesel engines are use for electricity generation

BAT Non-Water Quality Environmental Impacts: BAT Option 2

Region: Cook Inlet, AK
Technology: SBF Discharge from BAT Solids Control System (e.g., Cuttings Dryer only at 3.82%CRN) & ZD of fines

Summary Air Emissions (per model well)

Model Well	Air Emissions (short tons/model well)						
	NO_x	THC	SO_2	CO	TSP	Total	Total Per Day
Shallow Water Development	0.1012	0.0216	0.0028	0.0491	0.0031	0.1779	0.0342
Shallow Water Exploratory	0.1442	0.0291	0.0034	0.0730	0.0037	0.2534	0.0232
Deep Water Development	0.1218	0.0252	0.0031	0.0604	0.0034	0.2140	0.0271
Deep Water Exploratory	0.2200	0.0434	0.0040	0.1212	0.0043	0.3928	0.0224

Summary Fuel Usage (per model well)

Model Well		Fuel Usage Per Model Well		
		Gallons	Barrels of Oil Equivalent (BOE)	Barrels of Oil Equivalent (BOE) per day
Shallow Water Development		2,282.6	54.3	10.5
Shallow Water Exploratory		3,957.7	94.2	8.6
Deep Water Development		3,076.9	73.3	9.3
Deep Water Exploratory		6,442.1	153.4	8.8

Note: 1 BOE = 42 gallons of diesel

BAT Non-Water Quality Environmental Impacts: BAT Option 2

Region: Cook Inlet, AK
Technology: SBF Discharge from BAT Solids Control System (e.g., Cuttings Dryer only at 3.82%CRN) & ZD of fines

Daily Drill Rig Emissions

Model Well	Air Emissions (short tons/model well)					
	NO_x	THC	SO_2	CO	TSP	Total
Shallow Water Development	3.1570	1.6954	0.2150	0.4525	0.2475	5.7674
Shallow Water Exploratory	3.1570	1.6954	0.2150	0.4525	0.2475	5.7674
Deep Water Development	3.1570	1.6954	0.2150	0.4525	0.2475	5.7674
Deep Water Exploratory	3.1570	1.6954	0.2150	0.4525	0.2475	5.7674

Note: Drill rig emissions include impacts from all rig daily operations and one helicopter trip to and from the rig.

Daily Drill Rig Fuel Usage

Model Well	gallons per model well	Barrels of Oil Equivalent (BOE) per model well
Shallow Water Development	15,388.0	366.4
Shallow Water Exploratory	15,388.0	366.4
Deep Water Development	15,388.0	366.4
Deep Water Exploratory	15,388.0	366.4
TOTAL	61,552.0	1,465.5

AK BAT2 Annual Emissions/Fuel Usage

Model Well	SBF (Discharge @ 3.82%)		WBF (Discharge @ 10.20%)		OBF (Zero Discharge)	
	Total Air Emissions (tons)	Barrels of Oil Equivalent (BOE)	Total Air Emissions (tons)	Barrels of Oil Equivalent (BOE)	Total Air Emissions (tons)	Barrels of Oil Equivalent (BOE)
Shallow Water Development	30.1682	1,959.5	180.9119	11,538.1	0.0000	0.0
Shallow Water Exploratory	0.0000	0.0	126.4064	8,061.8	63.0755	4,107.5
Deep Water Development	0.0000	0.0	0.0000	0.0	0.0000	0.0
Deep Water Exploratory	0.0000	0.0	0.0000	0.0	0.0000	0.0
TOTAL	**30.2**	**1,959.5**	**307.3**	**19,599.9**	**63.1**	**4,107.5**
	400.6					
	25,666.9					

Note: Summary annual air emission/fuel usage totals assume the following number of SBF wells (existing sources) under this technology option:
1 SWD wells, 0 SWE wells, 0 DWD wells, and 0 DWE wells

Note: Summary annual air emission/fuel usage totals assume the following number of OBF wells (existing sources) under this technology option:
0 SWD wells, 1 SWE wells, 0 DWD wells, and 0 DWE wells

Note: Summary annual air emission/fuel usage totals assume the following number of WBF wells (existing sources) under this technology option:
3 SWD wells, 1 SWE wells, 0 DWD wells, and 0 DWE wells

Note: 1 BOE = 42 gallons of diesel

BAT Non-Water Quality Environmental Impacts: BAT Option 2

Region: Cook Inlet, AK
Technology: SBF Discharge from BAT Solids Control System (e.g., Cuttings Dryer only at 3.82%CRN) & ZD of fines

Annual Air Emissions (SBF BAT1 Model Well - Discharging at 3.82% CRN

Model Well	Air Emissions (short tons/model well)					
	NO_x	THC	SO_2	CO	TSP	Total
Shallow Water Development	16.5176	8.8377	1.1206	2.4021	1.2901	30.1682
Shallow Water Exploratory	0.0000	0.0000	0.0000	0.0000	0.0000	0.0000
Deep Water Development	0.0000	0.0000	0.0000	0.0000	0.0000	0.0000
Deep Water Exploratory	0.0000	0.0000	0.0000	0.0000	0.0000	0.0000
Total	**16.5176**	**8.8377**	**1.1206**	**2.4021**	**1.2901**	

Annual Air Emissions (OBF Baseline Model Well - Zero Discharging at 10.20% CRN)

Model Well	Air Emissions (short tons/model well)					
	NOx	THC	SO2	CO	TSP	Total
Shallow Water Development	0.0000	0.0000	0.0000	0.0000	0.0000	0.0000
Shallow Water Exploratory	16.5352	8.8325	1.1180	2.4288	1.2870	30.2015
Deep Water Development	0.0000	0.0000	0.0000	0.0000	0.0000	0.0000
Deep Water Exploratory	0.0000	0.0000	0.0000	0.0000	0.0000	0.0000
Total	**16.5352**	**8.8325**	**1.1180**	**2.4288**	**1.2870**	

Annual Air Emissions (WBF Baseline Model Well - Discharging at 10.20% CRN)

Model Well	Air Emissions (short tons/model well)					
	NO_x	THC	SO_2	CO	TSP	Total
Shallow Water Development	98.8353	52.9238	6.7288	14.1932	7.7457	180.4268
Shallow Water Exploratory	69.0580	36.9788	4.7015	9.9171	5.4120	126.0674
Deep Water Development	0.0000	0.0000	0.0000	0.0000	0.0000	0.0000
Deep Water Exploratory	0.0000	0.0000	0.0000	0.0000	0.0000	0.0000
Total	**167.8934**	**89.9025**	**11.4303**	**24.1103**	**13.1577**	

Note: Summary annual air emissions totals assume the following number of SBF wells (existing sources) under this technology option:
1 SWD wells, 0 SWE wells, 0 DWD wells, and 0 DWE wells

Note: Summary annual air emissions totals assume the following number of OBF wells (existing sources) under this technology option:
0 SWD wells, 1 SWE wells, 0 DWD wells, and 0 DWE wells

Note: Summary annual air emissions totals assume the following number of WBF wells (existing sources) under this technology option:
3 SWD wells, 1 SWE wells, 0 DWD wells, and 0 DWE wells

BAT Non-Water Quality Environmental Impacts: GOM Zero Discharge

Region: Offshore Gulf of Mexico (GOM)
Technology: Zero Discharge via Haul and Land Disposal @ 10.20% CRN

Fuel-Consuming Activity	Diesel Fuel Consumed (gal/model well)				Note
	Shallow Water		Deep Water		(All information below is detailed in EPA, 2000 unless otherwise noted.)
	Development	Exploratory	Development	Exploratory	
Baseline Solids Control Equipment	748.8	1,569.6	1,137.6	2,520.0	Baseline equipment include: 4 x 5 hp primary shale shakers, 4 x 5 hp secondary shale shakers, and 1 x 27.5 hp fines removal unit (avg of 5 hp mud cleaner and 50 hp decanting centrifuge).
Regular Supply Boat Transit	0.0	870.4	0.0	870.4	
Dedicated Supply Boat Transit	3,131.3	3,131.3	3,131.3	6,262.6	
Total Supply Boat Transit	3,131.3	4,001.7	3,131.3	7,133.0	
Barge Transit	61.7	128.3	93.3	206.7	
Supply Boat Maneuvering	25.3	50.6	25.3	75.9	
Dedicated Supply Boat Loading	3,197.9	6,532.5	4,837.4	10,580.5	Dedicated supply boats are assumed to be moored and idling at the platform until it has reached capacity or until all SBF generated cuttings from the drilling operation are loaded.
Regular Supply Boat Loading	0.0	101.2	0.0	101.2	
Supply Boat Auxiliary Generator (in Port Demurrage)	144.0	288.0	144.0	432.0	
Supply Boat Cranes	123.3	256.6	186.6	413.2	
Barge Cranes	61.6	128.3	93.3	206.6	
Trucks	40.0	85.0	60.0	130.0	
Subtotal	7,533.9	13,141.8	9,708.8	21,799.0	

BAT Non-Water Quality Environmental Impacts: GOM Zero Discharge

Region: Offshore Gulf of Mexico (GOM)
Technology: Zero Discharge via Haul and Land Disposal @ 10.20% CRN

Fuel-Consuming Activity	Diesel Fuel Consumed (gal/model well)				Note (All information below is detailed in EPA, 2000 unless otherwise noted.)
	Shallow Water		Deep Water		
	Development	Exploratory	Development	Exploratory	
On-shore Disposal (Landfarming)					
Wheel Tractor for Grading at Landfarm	13.4	13.4	13.4	13.4	
Dozer/Loader for Spreading Waste at Landfarm	352.0	352.0	352.0	352.0	
On-shore Landfarming Subtotal:	365.4	365.4	365.4	365.4	
On-shore Disposal (Injection)					
Cuttings Transfer	4.4	9.2	6.7	14.8	Hours of operation equals the cuttings waste volume divided by cuttings injection rate (bbl/hr). The transfer equipment utilizes one (1) 100 hp vacuum pump.
Cuttings Grinding/Processing	4.4	9.2	6.7	14.8	Hours of operation equals the cuttings waste volume divided by cuttings injection rate (bbl/hr). Total power utilized by the grinding and processing equipment is 120 hp.
Cuttings Injection	4.4	9.2	6.7	14.8	Hours of operation equals the cuttings waste volume divided by cuttings injection rate (bbl/hr).
On-shore Injection Subtotal:	13.2	27.7	20.0	44.5	
On-shore Disposal Subtotal:	83.6	95.2	89.1	108.7	Weighted average using landfarming/on-shore injection percentage split (20%/80%) of offshore wastes sent on-shore
TOTAL Diesel Per Well (Gal)	7,617.6	13,237.0	9,797.9	21,907.7	

BAT Non-Water Quality Environmental Impacts: GOM Zero Discharge

Region: Offshore Gulf of Mexico (GOM)
Technology: Zero Discharge via Haul and Land Disposal @ 10.20% CRN

Energy-Consuming Activity	Energy Requirements (hp-hr/model well)				Note (All information below is detailed in EPA, 2000 unless otherwise noted.)
	Shallow Water		Deep Water		
	Development	Exploratory	Development	Exploratory	
Baseline Solids Control Equipment	8,424.0	17,658.0	12,798.0	28,350.0	Baseline equipment include: 4 x 5 hp primary shale shakers, 4 x 5 hp secondary shale shakers, and 1 x 27.5 hp fines removal unit (avg of 5 hp mud cleaner and 50 hp decanting centrifuge).
Supply Boat Auxiliary Generator (in Port Demurrage)	1,440.0	2,880.0	1,440.0	4,320.0	
Supply Boat Cranes	2,012.8	4,188.8	3,046.4	6,745.6	
Barge Cranes	1,006.4	2,094.4	1,523.2	3,372.8	
On-shore Disposal (Injection)					
Cuttings Transfer	73.5	153.9	111.2	247.2	EPA assumes that all onshore cuttings injection facility equipment use diesel (Fall 1999 Field Trip)
Cuttings Grinding/Proc.	88.1	184.7	133.4	296.6	
Cuttings Injection	899.9	1,885.7	1,361.7	3,027.7	
Total Power Requirements (per model well) for Seven Selected Energy-Consuming Activities (hp):	13,944.7	29,045.6	20,413.9	46,359.8	These seven energy-consuming activities were selected for inclusion in this table as their air emission factors are given in terms of mass/power-time (g/bhp-hr).

BAT Non-Water Quality Environmental Impacts: GOM Zero Discharge

Region: Offshore Gulf of Mexico (GOM)
Technology: Zero Discharge via Haul and Land Disposal @ 10.20% CRN

Shallow Water Development (SWD) Well Air Emissions

Air Emission Activity	Air Emissions (short tons/model well)					
	NO_x	THC	SO_2	CO	TSP	Total
Baseline Solids Control Equipment						
Diesel Fuel Source	0.1300	0.0104	0.0086	0.0281	0.0093	0.1865
Natural Gas Fuel Source	0.0121	0.0017	0.0000	0.0077	0.0000	0.0215
Baseline Solids Control Subtotal	0.1123	0.0091	0.0074	0.0251	0.0079	0.1617
Supply Boats						
Transit	0.6133	0.2630	0.0446	0.1226	0.0517	1.0951
Maneuvering	0.0053	0.0029	0.0004	0.0008	0.0004	0.0097
Loading	0.6709	0.3614	0.0455	0.0956	0.0528	1.2262
Demurrage	0.0222	0.0018	0.0015	0.0048	0.0016	0.0319
Cranes	0.0311	0.0025	0.0021	0.0067	0.0022	0.0446
Barge						
Transit	0.0121	0.0052	0.0009	0.0024	0.0010	0.0216
Cranes	0.0155	0.0012	0.0010	0.0034	0.0011	0.0223
Trucks	0.0020	0.0004	0.0000	0.0015	0.0000	0.0039
On-shore Disposal (Landfarming)						
Wheel Tractor	0.0051	0.0008	0.0004	0.0144	0.0005	0.0211
Dozer/Loader	0.0066	0.0008	0.0006	0.0016	0.0005	0.0101
On-shore Disposal (Injection)						
Cuttings Transfer	0.0011	0.0001	0.0001	0.0002	0.0001	0.0016
Cuttings Grinding/Proc.	0.0014	0.0001	0.0001	0.0003	0.0001	0.0020
Cuttings Injection	0.0139	0.0011	0.0009	0.0030	0.0010	0.0199
Onshore Diposal Subtotal	0.0154	0.0014	0.0011	0.0060	0.0011	0.0250
Total Per Well	1.5001	0.6488	0.1044	0.2689	0.1198	2.6420

Note: On-shore Injection air emissions assume that diesel engines are use for electricity generation

BAT Non-Water Quality Environmental Impacts: GOM Zero Discharge

Region: Offshore Gulf of Mexico (GOM)
Technology: Zero Discharge via Haul and Land Disposal @ 10.20% CRN

Shallow Water Exploratory (SWE) Well Air Emissions

Air Emission Activity	Air Emissions (short tons/model well)					
	NO_x	THC	SO_2	CO	TSP	Total
Baseline Solids Control Equipment						
Diesel Fuel Source	0.2725	0.0218	0.0181	0.0590	0.0195	0.3909
Natural Gas Fuel Source	0.0253	0.0035	0.0000	0.0162	0.0000	0.0450
Baseline Solids Control Subtotal	0.2354	0.0191	0.0154	0.0526	0.0165	0.3390
Supply Boats						
Transit	0.7837	0.3361	0.0570	0.1567	0.0660	1.3996
Maneuvering	0.0106	0.0057	0.0007	0.0015	0.0008	0.0194
Loading	1.3917	0.7496	0.0945	0.1983	0.1095	2.5436
Demurrage	0.0444	0.0036	0.0030	0.0096	0.0032	0.0637
Cranes	0.0646	0.0052	0.0043	0.0140	0.0046	0.0927
Barge						
Transit	0.0251	0.0108	0.0018	0.0050	0.0021	0.0449
Cranes	0.0323	0.0026	0.0021	0.0070	0.0023	0.0464
Trucks	0.0042	0.0009	0.0000	0.0032	0.0000	0.0083
On-shore Disposal (Landfarming)						
Wheel Tractor	0.0051	0.0008	0.0004	0.0144	0.0005	0.0211
Dozer/Loader	0.0066	0.0008	0.0006	0.0016	0.0005	0.0101
On-shore Disposal (Injection)						
Cuttings Transfer	0.0024	0.0002	0.0002	0.0005	0.0002	0.0034
Cuttings Grinding/Proc.	0.0029	0.0002	0.0002	0.0006	0.0002	0.0041
Cuttings Injection	0.0291	0.0023	0.0019	0.0063	0.0021	0.0417
Onshore Diposal Subtotal	0.0298	0.0025	0.0020	0.0091	0.0022	0.0456
Total Per Well	2.6221	1.1361	0.1808	0.4570	0.2072	4.6032

Note: On-shore Injection air emissions assume that diesel engines are use for electricity generation

BAT Non-Water Quality Environmental Impacts: GOM Zero Discharge

Region: Offshore Gulf of Mexico (GOM)
Technology: Zero Discharge via Haul and Land Disposal @ 10.20% CRN

Deep Water Development (DWD) Well Air Emissions

Air Emission Activity	Air Emissions (short tons/model well)					
	NO_x	THC	SO_2	CO	TSP	Total
Baseline Solids Control Equipment						
Diesel Fuel Source	0.1975	0.0158	0.0131	0.0427	0.0141	0.2833
Natural Gas Fuel Source	0.0183	0.0025	0.0000	0.0117	0.0000	0.0326
Baseline Solids Control Subtotal	0.1706	0.0138	0.0112	0.0381	0.0120	0.2457
Supply Boats						
Transit	0.6133	0.2630	0.0446	0.1226	0.0517	1.0951
Maneuvering	0.0053	0.0029	0.0004	0.0008	0.0004	0.0097
Loading	1.0149	0.5466	0.0689	0.1446	0.0798	1.8548
Demurrage	0.0222	0.0018	0.0015	0.0048	0.0016	0.0319
Cranes	0.0470	0.0038	0.0031	0.0102	0.0034	0.0674
Barge						
Transit	0.0183	0.0078	0.0013	0.0037	0.0015	0.0326
Cranes	0.0235	0.0019	0.0016	0.0051	0.0017	0.0337
Trucks	0.0030	0.0007	0.0000	0.0023	0.0000	0.0059
On-shore Disposal (Landfarming)						
Wheel Tractor	0.0051	0.0008	0.0004	0.0144	0.0005	0.0211
Dozer/Loader	0.0066	0.0008	0.0006	0.0016	0.0005	0.0101
On-shore Disposal (Injection)						
Cuttings Transfer	0.0017	0.0001	0.0001	0.0004	0.0001	0.0025
Cuttings Grinding/Proc.	0.0021	0.0002	0.0001	0.0004	0.0001	0.0030
Cuttings Injection	0.0210	0.0017	0.0014	0.0045	0.0015	0.0301
Onshore Diposal Subtotal	0.0222	0.0019	0.0015	0.0075	0.0016	0.0347
Total Per Well	1.9402	0.8441	0.1340	0.3395	0.1537	3.4116

Note: On-shore Injection air emissions assume that diesel engines are use for electricity generation

BAT Non-Water Quality Environmental Impacts: GOM Zero Discharge

Region: Offshore Gulf of Mexico (GOM)
Technology: Zero Discharge via Haul and Land Disposal @ 10.20% CRN

Deep Water Exploratory (DWE) Well Air Emissions

Air Emission Activity	Air Emissions (short tons/model well)					
	NO_x	THC	SO_2	CO	TSP	Total
Baseline Solids Control Equipment						
Diesel Fuel Source	0.4375	0.0350	0.0291	0.0947	0.0313	0.6275
Natural Gas Fuel Source	0.0406	0.0056	0.0001	0.0259	0.0000	0.0723
Baseline Solids Control Subtot	0.3780	0.0306	0.0247	0.0844	0.0266	0.5442
Supply Boats						
Transit	1.3970	0.5992	0.1016	0.2793	0.1177	2.4947
Maneuvering	0.0159	0.0086	0.0011	0.0023	0.0013	0.0291
Loading	2.2410	1.2070	0.1521	0.3194	0.1762	4.0958
Demurrage	0.0667	0.0053	0.0044	0.0144	0.0048	0.0956
Cranes	0.1041	0.0083	0.0069	0.0225	0.0074	0.1493
Barge						
Transit	0.0405	0.0174	0.0029	0.0081	0.0034	0.0723
Cranes	0.0520	0.0042	0.0035	0.0113	0.0037	0.0747
Trucks	0.0064	0.0014	0.0000	0.0049	0.0000	0.0128
On-shore Disposal (Landfarming)						
Wheel Tractor	0.0051	0.0008	0.0004	0.0144	0.0005	0.0211
Dozer/Loader	0.0066	0.0008	0.0006	0.0016	0.0005	0.0101
On-shore Disposal (Injection)						
Cuttings Transfer	0.0038	0.0003	0.0003	0.0008	0.0003	0.0055
Cuttings Grinding/Proc.	0.0046	0.0004	0.0003	0.0010	0.0003	0.0066
Cuttings Injection	0.0467	0.0037	0.0031	0.0101	0.0033	0.0670
Onshore Diposal Subtotal	0.0464	0.0038	0.0031	0.0127	0.0034	0.0695
Total Per Well	4.3481	1.8858	0.3004	0.7592	0.3444	7.6379

Note: On-shore Injection air emissions assume that diesel engines are use for electricity generation

BAT Non-Water Quality Environmental Impacts: GOM Zero Discharge

Region: Offshore Gulf of Mexico (GOM)
Technology: Zero Discharge via Offshore/On-Site Cuttings Injection @ 10.20% CRN

On-site Injection Diesel Fuel Requirements (per model well)

Fuel-Consuming Activity	Diesel Fuel Consumed (gal/model well)				Note (All information below is detailed in EPA, 2000 unless otherwise noted.)
	Shallow Water		Deep Water		
	Development	Exploratory	Development	Exploratory	
Baseline Solids Control Equipment	748.8	1,569.6	1,137.6	2,520.0	Baseline equipment include: 4 x 5 hp primary shale shakers, 4 x 5 hp secondary shale shakers, and 1 x 27.5 hp fines removal unit (avg of 5 hp mud cleaner and 50 hp decanting centrifuge).
Offshore Injection Disposal					
Cuttings Transfer	748.8	1,569.6	1,137.6	2,520.0	Hours of operation equals the drilling length in days (x 24 hr/day). The transfer equipment utilizes one (1) 100 hp vacuum pump.
Cuttings Grinding/Proc.	748.8	1,569.6	1,137.6	2,520.0	Hours of operation equals the drilling length in days (x 24 hr/day). Total power utilized by the grinding and processing equipment is 120 hp.
Cuttings Injection	36.7	76.8	55.5	123.4	Hours of operation equals the cuttings waste volume divided by cuttings injection rate (bbl/hr).Total power utilized by the grinding and processing equipment is 600 hp.
TOTAL Diesel Per Well (Gal)	2,283.1	4,785.6	3,468.3	7,683.4	

On-site Injection Energy Requirements (per model well)

Energy-Consuming Activity	Energy Requirements (hp-hr/model well)				Note (All information below is detailed in EPA, 2000 unless otherwise noted.)
	Shallow Water		Deep Water		
	Development	Exploratory	Development	Exploratory	
Baseline Solids Control Equipment	8,424.0	17,658.0	12,798.0	28,350.0	
Offshore Injection Disposal					
Cuttings Transfer	12,480.0	26,160.0	18,960.0	42,000.0	
Cuttings Grinding/Proc.	14,976.0	31,392.0	22,752.0	50,400.0	
Cuttings Pump Injection	3,667.0	7,684.5	5,549.2	12,338.1	
Total Power Requirements (per model well) for Four Activities (hp):	39,547.0	82,894.5	60,059.2	133,088.1	These four energy-consuming activities were selected for inclusion in this table as their air emission factors are given in terms of mass/power-time (g/bhp-hr).

BAT Non-Water Quality Environmental Impacts: GOM Zero Discharge

Region: Offshore Gulf of Mexico (GOM)
Technology: Zero Discharge via Offshore/On-Site Cuttings Injection @ 10.20% CRN

On-site Injection Air Emissions (per model well) - Rig Fuel Type for Electricity Generation (Diesel)

Model Well	Air Emissions (short tons/model well)					
	NO_x	THC	SO_2	CO	TSP	Total
Shallow Water Development	0.6103	0.0488	0.0406	0.1321	0.0436	0.8754
Shallow Water Exploratory	1.2792	0.1023	0.0851	0.2769	0.0914	1.8349
Deep Water Development	0.9268	0.0741	0.0616	0.2006	0.0662	1.3294
Deep Water Exploratory	2.0538	0.1643	0.1366	0.4445	0.1467	2.9459

On-site Injection Air Emissions (per model well) - Rig Fuel Type for Electricity Generation (Natural Gas)

Model Well	Air Emissions (short tons/model well)					
	NO_x	THC	SO_2	CO	TSP	Total
Shallow Water Development	0.0567	0.0078	0.0001	0.0362	0.0000	0.1008
Shallow Water Exploratory	0.1188	0.0164	0.0002	0.0758	0.0000	0.2113
Deep Water Development	0.0861	0.0119	0.0001	0.0549	0.0000	0.1531
Deep Water Exploratory	0.1907	0.0264	0.0003	0.1218	0.0000	0.3392

Average On-site Injection Air Emissions (per model well) - Weighted by Rig Diesel/Natural Gas Percentage Fuel Split (85%/15%) for Electricity Generation

Model Well	Air Emissions (short tons/model well)					
	NO_x	THC	SO_2	CO	TSP	Total
Shallow Water Development	0.5273	0.0427	0.0345	0.1177	0.0371	0.7592
Shallow Water Exploratory	1.1052	0.0895	0.0723	0.2467	0.0777	1.5913
Deep Water Development	0.8007	0.0648	0.0524	0.1787	0.0563	1.1530
Deep Water Exploratory	1.7744	0.1436	0.1161	0.3961	0.1247	2.5549

BAT Non-Water Quality Environmental Impacts: GOM Zero Discharge

Region: Offshore Gulf of Mexico (GOM)
Technology: Zero Discharge (via Haul and Land Disposal & Offshore/On-Site Cuttings Injection) @ 10.20% CRN

Summary Air Emissions (per model well) - Weighted by Land Disposal/On-site Injection Percentage Split

Model Well	Air Emissions (short tons/model well)						
	NO_x	THC	SO_2	CO	TSP	Total	Total Per Day
Shallow Water Development	1.3055	0.5276	0.0904	0.2386	0.1033	2.2654	0.4357
Shallow Water Exploratory	2.3187	0.9267	0.1591	0.4150	0.1813	4.0009	0.3671
Deep Water Development	1.9402	0.8441	0.1340	0.3395	0.1537	3.4116	0.4318
Deep Water Exploratory	4.3481	1.8858	0.3004	0.7592	0.3444	7.6379	0.4365

Note: Weighted summary air emissions totals assume the land disposal/on-site injection percentage splits are (80%/20%), (80%/20%), (100%/0%), and (100%/0%) for SWD, SWE, DWD, and DWE model wells respectively.

Summary Fuel Usage (per model well) - Weighted by Land Disposal/On-site Injection Percentage Split

Model Well		Fuel Usage Per Model Well		
		Gallons	Barrels of Oil Equivalent (BOE)	Barrels of Oil Equivalent (BOE) per day
Shallow Water Development		6,550.7	156.0	30.0
Shallow Water Exploratory		11,546.7	274.9	25.2
Deep Water Development		9,797.9	233.3	29.5
Deep Water Exploratory		21,907.7	521.6	29.8

Note: Weighted summary fuel usage totals assume the land disposal/on-site injection percentage splits are (80%/20%), (80%/20%), (100%/0%), and (100%/0%) for SWD, SWE, DWD, and DWE model wells respectively.

Note: 1 BOE = 42 gallons of diesel

BAT Non-Water Quality Environmental Impacts: GOM Zero Discharge

Region: Offshore Gulf of Mexico (GOM)
Technology: Zero Discharge (via Haul and Land Disposal & Offshore/On-Site Cuttings Injection) @ 10.20% CRN

Daily Drill Rig Emissions

Model Well	Air Emissions (short tons/model well)					
	NO_x	THC	SO_2	CO	TSP	Total
Shallow Water Development	3.1570	1.6954	0.2150	0.4525	0.2475	5.7674
Shallow Water Exploratory	3.1570	1.6954	0.2150	0.4525	0.2475	5.7674
Deep Water Development	3.1570	1.6954	0.2150	0.4525	0.2475	5.7674
Deep Water Exploratory	3.1570	1.6954	0.2150	0.4525	0.2475	5.7674

Note: Drill rig emissions include impacts from all rig daily operations and one helicopter trip to and from the rig.

Daily Drill Rig Fuel Usage

Model Well	gallons per model well	Barrels of Oil Equivalent (BOE) per model well
Shallow Water Development	15,388.0	366.4
Shallow Water Exploratory	15,388.0	366.4
Deep Water Development	15,388.0	366.4
Deep Water Exploratory	15,388.0	366.4
TOTAL	61,552.0	1,465.5

GOM ZD Annual Emissions/Fuel Usage

Model Well	SBF (Zero Discharge)		OBF (Zero Discharge)		WBF (Discharge @ 10.20%)	
	Total Air Emissions (tons)	Barrels of Oil Equivalent (BOE)	Total Air Emissions (tons)	Barrels of Oil Equivalent (BOE)	Total Air Emissions (tons)	Barrels of Oil Equivalent (BOE)
Shallow Water Development	0.0000	0.0	4,128.7307	263,827.1	30,815.3325	1,965,315.7
Shallow Water Exploratory	0.0000	0.0	5,081.7463	324,404.1	37,669.1115	2,402,430.6
Deep Water Development	146.9212	9,383.1	391.7899	25,021.5	1,557.4662	99,330.8
Deep Water Exploratory	868.5339	55,466.2	2,714.1684	173,332.0	10,350.2500	660,110.0
TOTAL	**1,015.5**	**64,849.3**	**12,316.4**	**786,584.7**	**80,392.2**	**5,127,187.2**
	93,724.1					
	5,978,621.1					

Note: Summary annual air emission/fuel usage totals assume the following number of GOM SBF wells (existing sources) under this technology option: 0 SWD wells, 0 SWE wells, 3 DWD wells, and 8 DWE wells

Note: Summary annual air emission/fuel usage totals assume the following number of GOM OBF wells (existing sources) will be subject to zero discharge under this technology option: 128 SWD wells, 76 SWE wells, 8 DWD wells, and 25 DWE wells

Note: Summary annual air emission/fuel usage totals assume the following number of GOM WBF wells (existing sources) under this technology option: 511 SWD wells, 298 SWE wells, 17 DWD wells, and 51 DWE wells

Note: 1 BOE = 42 gallons of diesel

BAT Non-Water Quality Environmental Impacts: GOM Zero Discharge

Region: Offshore Gulf of Mexico (GOM)
Technology: Zero Discharge (via Haul and Land Disposal & Offshore/On-Site Cuttings Injection) @ 10.20% CRN

Annual Air Emissions (SBF BAT3 Model Well - Zero Discharge at 10.20% CRN)

Model Well	Air Emissions (short tons/model well)					
	NO_x	THC	SO_2	CO	TSP	Total
Shallow Water Development	0.0000	0.0000	0.0000	0.0000	0.0000	0.0000
Shallow Water Exploratory	0.0000	0.0000	0.0000	0.0000	0.0000	0.0000
Deep Water Development	55.0699	28.9806	3.7554	8.0776	4.3220	100.2056
Deep Water Exploratory	166.1158	85.6152	11.3454	24.8978	13.0515	301.0257
Total	**221.1857**	**114.5958**	**15.1008**	**32.9754**	**17.3735**	

Annual Air Emissions (OBF Baseline Model Well - Zero Discharging at 10.20% CRN)

Model Well	Air Emissions (short tons/model well)					
	NOx	THC	SO2	CO	TSP	Total
Shallow Water Development	2,268.4095	1,195.9904	154.6472	331.7302	177.9534	4,128.7307
Shallow Water Exploratory	2,791.4792	1,474.9011	190.1667	406.3893	218.8100	5,081.7463
Deep Water Development	215.0443	113.9023	14.6576	31.3143	16.8714	391.7899
Deep Water Exploratory	1,489.8892	788.8830	101.5547	216.9494	116.8921	2,714.1684
Total	**6,764.8222**	**3,573.6768**	**461.0261**	**986.3832**	**530.5269**	

Annual Air Emissions (WBF Baseline Model Well - Discharging at 10.20% CRN)

Model Well	Air Emissions (short tons/model well)					
	NO_x	THC	SO_2	CO	TSP	Total
Shallow Water Development	16,834.9516	9,014.6791	1,146.1398	2,417.5775	1,319.3473	30,732.6952
Shallow Water Exploratory	20,579.2901	11,019.6751	1,401.0580	2,955.2820	1,612.7893	37,568.0945
Deep Water Development	850.8708	455.6192	57.9281	122.1890	66.6823	1,553.2895
Deep Water Exploratory	5,654.5214	3,027.8493	384.9653	812.0156	443.1422	10,322.4938
Total	**43,919.6339**	**23,517.8227**	**2,990.0912**	**6,307.0641**	**3,441.9611**	

Note: Summary annual air emissions totals assume the following number of GOM SBF wells (existing sources) under this technology option:
0 SWD wells, 0 SWE wells, 3 DWD wells, and 8 DWE wells

Note: Summary annual air emissions totals assume the following number of GOM OBF wells (existing sources) will be subject to zero discharge under this technology option: 128 SWD wells, 76 SWE wells, 8 DWD wells, and 25 DWE wells

Note: Summary annual air emissions totals assume the following number of GOM WBF wells (existing sources) under this technology option:
511 SWD wells, 298 SWE wells, 17 DWD wells, and 51 DWE wells

BAT Non-Water Quality Environmental Impacts: Offshore California Zero Discharge

Region: Offshore California
Technology: Zero Discharge via Haul and Land Disposal @ 10.20% CRN

Fuel-Consuming Activity	Diesel Fuel Consumed (gal/model well)				Note
	Shallow Water		Deep Water		(All information below is detailed in EPA, 2000 unless otherwise noted.)
	Development	Exploratory	Development	Exploratory	
Baseline Solids Control Equipment	748.8	1,569.6	1,137.6	2,520.0	Baseline equipment include: 4 x 5 hp primary shale shakers, 4 x 5 hp secondary shale shakers, and 1 x 27.5 hp fines removal unit (avg of 5 hp mud cleaner and 50 hp decanting centrifuge).
Regular Supply Boat Transit	0.0	0.0	0.0	0.0	
Dedicated Supply Boat Transit	2,260.9	2,260.9	2,260.9	4,521.7	
Total Supply Boat Transit	2,260.9	2,260.9	2,260.9	4,521.7	
Barge Transit	0.0	0.0	0.0	0.0	
Supply Boat Maneuvering	25.3	50.6	25.3	75.9	
Dedicated Supply Boat Loading	3,197.9	6,532.5	4,837.4	10,580.5	Dedicated supply boats are assumed to be moored and idling at the platform until it has reached capacity or until all SBF generated cuttings from the drilling operation are loaded.
Regular Supply Boat Loading	0.0	101.2	0.0	101.2	
Supply Boat Auxiliary Generator (in Port Demurrage)	144.0	288.0	144.0	432.0	
Supply Boat Cranes	123.3	256.6	186.6	413.2	
Barge Cranes	0.0	0.0	0.0	0.0	
Trucks	1,425.0	2,925.0	2,100.0	4,650.0	
Subtotal	7,925.2	13,984.3	10,691.7	23,294.5	

BAT Non-Water Quality Environmental Impacts: Offshore California Zero Discharge

Region: Offshore California
Technology: Zero Discharge via Haul and Land Disposal @ 10.20% CRN

Fuel-Consuming Activity	Diesel Fuel Consumed (gal/model well)				Note (All information below is detailed in EPA, 2000 unless otherwise noted.)
	Shallow Water		Deep Water		
	Development	Exploratory	Development	Exploratory	
On-shore Disposal (Landfarming)					
Wheel Tractor for Grading at Landfarm	13.4	13.4	13.4	13.4	
Dozer/Loader for Spreading Waste at Landfarm	352.0	352.0	352.0	352.0	
On-shore Landfarming Subtotal:	365.4	365.4	365.4	365.4	
On-shore Disposal (Injection)					
Cuttings Transfer	4.4	9.2	6.7	14.8	Hours of operation equals the cuttings waste volume divided by cuttings injection rate (bbl/hr). The transfer equipment utilizes one (1) 100 hp vacuum pump.
Cuttings Grinding/Processing	4.4	9.2	6.7	14.8	Hours of operation equals the cuttings waste volume divided by cuttings injection rate (bbl/hr). Total power utilized by the grinding and processing equipment is 120 hp.
Cuttings Injection	4.4	9.2	6.7	14.8	Hours of operation equals the cuttings waste volume divided by cuttings injection rate (bbl/hr).
On-shore Injection Subtotal:	13.2	27.7	20.0	44.5	
On-shore Disposal Subtotal:	83.6	95.2	89.1	108.7	Weighted average using landfarming/on-shore injection percentage split (20%/80%) of offshore wastes sent on-shore
TOTAL Diesel Per Well (Gal)	8,008.8	14,079.5	10,780.8	23,403.1	

BAT Non-Water Quality Environmental Impacts: Offshore California Zero Discharge

Region: Offshore California
Technology: Zero Discharge via Haul and Land Disposal @ 10.20% CRN

Energy-Consuming Activity	Energy Requirements (hp-hr/model well)				Note (All information below is detailed in EPA, 2000 unless otherwise noted.)
	Shallow Water		Deep Water		
	Development	Exploratory	Development	Exploratory	
Baseline Solids Control Equipment	8,424.0	17,658.0	12,798.0	28,350.0	Baseline equipment include: 4 x 5 hp primary shale shakers, 4 x 5 hp secondary shale shakers, and 1 x 27.5 hp fines removal unit (avg of 5 hp mud cleaner and 50 hp decanting centrifuge).
Supply Boat Auxiliary Generator (in Port Demurrage)	1,440.0	2,880.0	1,440.0	4,320.0	
Supply Boat Cranes	2,012.8	4,188.8	3,046.4	6,745.6	
Barge Cranes	0.0	0.0	0.0	0.0	
On-shore Disposal (Injection)					
Cuttings Transfer	73.5	153.9	111.2	247.2	EPA assumes that all onshore cuttings injection facility equipment use diesel (Fall 1999 Field Trip)
Cuttings Grinding/Proc.	88.1	184.7	133.4	296.6	
Cuttings Injection	899.9	1,885.7	1,361.7	3,027.7	
Total Power Requirements (per model well) for Seven Selected Energy-Consuming Activities (hp):	12,938.3	26,951.2	18,890.7	42,987.0	These seven energy-consuming activities were selected for inclusion in this table as their air emission factors are given in terms of mass/power-time (g/bhp-hr).

BAT Non-Water Quality Environmental Impacts: Offshore California Zero Discharge

Region: Offshore California
Technology: Zero Discharge via Haul and Land Disposal @ 10.20% CRN

Shallow Water Development (SWD) Well Air Emissions

Air Emission Activity	Air Emissions (short tons/model well)					
	NO_x	THC	SO_2	CO	TSP	Total
Baseline Solids Control Equipment						
Diesel Fuel Source	0.1300	0.0104	0.0086	0.0281	0.0093	0.1865
Natural Gas Fuel Source	0.0121	0.0017	0.0000	0.0077	0.0000	0.0215
Baseline Solids Control Subtotal	0.0121	0.0017	0.0000	0.0077	0.0000	0.0215
Supply Boats						
Transit	0.4428	0.1899	0.0322	0.0885	0.0373	0.7907
Maneuvering	0.0053	0.0029	0.0004	0.0008	0.0004	0.0097
Loading	0.6709	0.3614	0.0455	0.0956	0.0528	1.2262
Demurrage	0.0222	0.0018	0.0015	0.0048	0.0016	0.0319
Cranes	0.0311	0.0025	0.0021	0.0067	0.0022	0.0446
Barge						
Transit	0.0000	0.0000	0.0000	0.0000	0.0000	0.0000
Cranes	0.0000	0.0000	0.0000	0.0000	0.0000	0.0000
Trucks	0.0706	0.0156	0.0000	0.0536	0.0000	0.1398
On-shore Disposal (Landfarming)						
Wheel Tractor	0.0051	0.0008	0.0004	0.0144	0.0005	0.0211
Dozer/Loader	0.0066	0.0008	0.0006	0.0016	0.0005	0.0101
On-shore Disposal (Injection)						
Cuttings Transfer	0.0011	0.0001	0.0001	0.0002	0.0001	0.0016
Cuttings Grinding/Proc.	0.0014	0.0001	0.0001	0.0003	0.0001	0.0020
Cuttings Injection	0.0139	0.0011	0.0009	0.0030	0.0010	0.0199
Onshore Diposal Subtotal	0.0154	0.0014	0.0011	0.0060	0.0011	0.0250
Total Per Well	1.2704	0.5771	0.0827	0.2638	0.0954	2.2894

Note: On-shore Injection air emissions assume that diesel engines are use for electricity generation

BAT Non-Water Quality Environmental Impacts: Offshore California Zero Discharge

Region: Offshore California
Technology: Zero Discharge via Haul and Land Disposal @ 10.20% CRN

Shallow Water Exploratory (SWE) Well Air Emissions

Air Emission Activity	Air Emissions (short tons/model well)					
	NO_x	THC	SO_2	CO	TSP	Total
Baseline Solids Control Equipment						
Diesel Fuel Source	0.2725	0.0218	0.0181	0.0590	0.0195	0.3909
Natural Gas Fuel Source	0.0253	0.0035	0.0000	0.0162	0.0000	0.0450
Baseline Solids Control Subtotal	0.0253	0.0035	0.0000	0.0162	0.0000	0.0450
Supply Boats						
Transit	0.4428	0.1899	0.0322	0.0885	0.0373	0.7907
Maneuvering	0.0106	0.0057	0.0007	0.0015	0.0008	0.0194
Loading	1.3917	0.7496	0.0945	0.1983	0.1095	2.5436
Demurrage	0.0444	0.0036	0.0030	0.0096	0.0032	0.0637
Cranes	0.0646	0.0052	0.0043	0.0140	0.0046	0.0927
Barge						
Transit	0.0000	0.0000	0.0000	0.0000	0.0000	0.0000
Cranes	0.0000	0.0000	0.0000	0.0000	0.0000	0.0000
Trucks	0.1448	0.0321	0.0000	0.1100	0.0000	0.2870
On-shore Disposal (Landfarming)						
Wheel Tractor	0.0051	0.0008	0.0004	0.0144	0.0005	0.0211
Dozer/Loader	0.0066	0.0008	0.0006	0.0016	0.0005	0.0101
On-shore Disposal (Injection)						
Cuttings Transfer	0.0024	0.0002	0.0002	0.0005	0.0002	0.0034
Cuttings Grinding/Proc.	0.0029	0.0002	0.0002	0.0006	0.0002	0.0041
Cuttings Injection	0.0291	0.0023	0.0019	0.0063	0.0021	0.0417
Onshore Diposal Subtotal	0.0298	0.0025	0.0020	0.0091	0.0022	0.0456
Total Per Well	2.1542	0.9921	0.1367	0.4473	0.1575	3.8878

Note: On-shore Injection air emissions assume that diesel engines are use for electricity generation

BAT Non-Water Quality Environmental Impacts: Offshore California Zero Discharge

Region: Offshore California
Technology: Zero Discharge via Haul and Land Disposal @ 10.20% CRN

Deep Water Development (DWD) Well Air Emissions

Air Emission Activity	Air Emissions (short tons/model well)					
	NO_x	THC	SO_2	CO	TSP	Total
Baseline Solids Control Equipment						
Diesel Fuel Source	0.1975	0.0158	0.0131	0.0427	0.0141	0.2833
Natural Gas Fuel Source	0.0183	0.0025	0.0000	0.0117	0.0000	0.0326
Baseline Solids Control Subtotal	0.0183	0.0025	0.0000	0.0117	0.0000	0.0326
Supply Boats						
Transit	0.4428	0.1899	0.0322	0.0885	0.0373	0.7907
Maneuvering	0.0053	0.0029	0.0004	0.0008	0.0004	0.0097
Loading	1.0149	0.5466	0.0689	0.1446	0.0798	1.8548
Demurrage	0.0222	0.0018	0.0015	0.0048	0.0016	0.0319
Cranes	0.0470	0.0038	0.0031	0.0102	0.0034	0.0674
Barge						
Transit	0.0000	0.0000	0.0000	0.0000	0.0000	0.0000
Cranes	0.0000	0.0000	0.0000	0.0000	0.0000	0.0000
Trucks	0.1040	0.0231	0.0000	0.0790	0.0000	0.2060
On-shore Disposal (Landfarming)						
Wheel Tractor	0.0051	0.0008	0.0004	0.0144	0.0005	0.0211
Dozer/Loader	0.0066	0.0008	0.0006	0.0016	0.0005	0.0101
On-shore Disposal (Injection)						
Cuttings Transfer	0.0017	0.0001	0.0001	0.0004	0.0001	0.0025
Cuttings Grinding/Proc.	0.0021	0.0002	0.0001	0.0004	0.0001	0.0030
Cuttings Injection	0.0210	0.0017	0.0014	0.0045	0.0015	0.0301
Onshore Diposal Subtotal	0.0222	0.0019	0.0015	0.0075	0.0016	0.0347
Total Per Well	1.6767	0.7724	0.1076	0.3471	0.1241	3.0279

Note: On-shore Injection air emissions assume that diesel engines are use for electricity generation

BAT Non-Water Quality Environmental Impacts: Offshore California Zero Discharge

Region: Offshore California
Technology: Zero Discharge via Haul and Land Disposal @ 10.20% CRN

Deep Water Exploratory (DWE) Well Air Emissions

Air Emission Activity	Air Emissions (short tons/model well)					
	NO_x	THC	SO_2	CO	TSP	Total
Baseline Solids Control Equipment						
Diesel Fuel Source	0.4375	0.0350	0.0291	0.0947	0.0313	0.6275
Natural Gas Fuel Source	0.0406	0.0056	0.0001	0.0259	0.0000	0.0723
Baseline Solids Control Subtotal	0.0406	0.0056	0.0001	0.0259	0.0000	0.0723
Supply Boats						
Transit	0.8856	0.3798	0.0644	0.1770	0.0746	1.5814
Maneuvering	0.0159	0.0086	0.0011	0.0023	0.0013	0.0291
Loading	2.2410	1.2070	0.1521	0.3194	0.1762	4.0958
Demurrage	0.0667	0.0053	0.0044	0.0144	0.0048	0.0956
Cranes	0.1041	0.0083	0.0069	0.0225	0.0074	0.1493
Barge						
Transit	0.0000	0.0000	0.0000	0.0000	0.0000	0.0000
Cranes	0.0000	0.0000	0.0000	0.0000	0.0000	0.0000
Trucks	0.2302	0.0511	0.0000	0.1749	0.0000	0.4562
On-shore Disposal (Landfarming)						
Wheel Tractor	0.0051	0.0008	0.0004	0.0144	0.0005	0.0211
Dozer/Loader	0.0066	0.0008	0.0006	0.0016	0.0005	0.0101
On-shore Disposal (Injection)						
Cuttings Transfer	0.0038	0.0003	0.0003	0.0008	0.0003	0.0055
Cuttings Grinding/Proc.	0.0046	0.0004	0.0003	0.0010	0.0003	0.0066
Cuttings Injection	0.0467	0.0037	0.0031	0.0101	0.0033	0.0670
Onshore Diposal Subtotal	0.0464	0.0038	0.0031	0.0127	0.0034	0.0695
Total Per Well	3.6306	1.6696	0.2321	0.7492	0.2677	6.5492

Note: On-shore Injection air emissions assume that diesel engines are use for electricity generation

BAT Non-Water Quality Environmental Impacts: Offshore California Zero Discharge

Region: Offshore California
Technology: Zero Discharge via Offshore/On-Site Cuttings Injection @ 10.20% CRN

On-site Injection Diesel Fuel Requirements (per model well)

Fuel-Consuming Activity	Diesel Fuel Consumed (gal/model well)				Note (All information below is detailed in EPA, 2000 unless otherwise noted.)
	Shallow Water		Deep Water		
	Development	Exploratory	Development	Exploratory	
Baseline Solids Control Equipment	748.8	1,569.6	1,137.6	2,520.0	Baseline equipment include: 4 x 5 hp primary shale shakers, 4 x 5 hp secondary shale shakers, and 1 x 27.5 hp fines removal unit (avg of 5 hp mud cleaner and 50 hp decanting centrifuge).
Offshore Injection Disposal					
Cuttings Transfer	748.8	1,569.6	1,137.6	2,520.0	Hours of operation equals the drilling length in days (x 24 hr/day). The transfer equipment utilizes one (1) 100 hp vacuum pump.
Cuttings Grinding/Proc.	748.8	1,569.6	1,137.6	2,520.0	Hours of operation equals the drilling length in days (x 24 hr/day). Total power utilized by the grinding and processing equipment is 120 hp.
Cuttings Injection	36.7	76.8	55.5	123.4	Hours of operation equals the cuttings waste volume divided by cuttings injection rate (bbl/hr).Total power utilized by the grinding and processing equipment is 600 hp.
TOTAL Diesel Per Well (Gal)	2,283.1	4,785.6	3,468.3	7,683.4	

On-site Injection Energy Requirements (per model well)

Energy-Consuming Activity	Energy Requirements (hp-hr/model well)				Note (All information below is detailed in EPA, 2000 unless otherwise noted.)
	Shallow Water		Deep Water		
	Development	Exploratory	Development	Exploratory	
Baseline Solids Control Equipment	8,424.0	17,658.0	12,798.0	28,350.0	
Offshore Injection Disposal					
Cuttings Transfer	12,480.0	26,160.0	18,960.0	42,000.0	
Cuttings Grinding/Proc.	14,976.0	31,392.0	22,752.0	50,400.0	
Cuttings Pump Injection	3,667.0	7,684.5	5,549.2	12,338.1	
Total Power Requirements (per model well) for Four Activities (hp):	39,547.0	82,894.5	60,059.2	133,088.1	These four energy-consuming activities were selected for inclusion in this table as their air emission factors are given in terms of mass/power-time (g/bhp-hr).

BAT Non-Water Quality Environmental Impacts: Offshore California Zero Discharge

Region: Offshore California
Technology: Zero Discharge via Offshore/On-Site Cuttings Injection @ 10.20% CRN

On-site Injection Air Emissions (per model well) - Rig Fuel Type for Electricity Generation (Diesel)

Model Well	Air Emissions (short tons/model well)					
	NO_x	THC	SO_2	CO	TSP	Total
Shallow Water Development	0.6103	0.0488	0.0406	0.1321	0.0436	0.8754
Shallow Water Exploratory	1.2792	0.1023	0.0851	0.2769	0.0914	1.8349
Deep Water Development	0.9268	0.0741	0.0616	0.2006	0.0662	1.3294
Deep Water Exploratory	2.0538	0.1643	0.1366	0.4445	0.1467	2.9459

On-site Injection Air Emissions (per model well) - Rig Fuel Type for Electricity Generation (Natural Gas)

Model Well	Air Emissions (short tons/model well)					
	NO_x	THC	SO_2	CO	TSP	Total
Shallow Water Development	0.0567	0.0078	0.0001	0.0362	0.0000	0.1008
Shallow Water Exploratory	0.1188	0.0164	0.0002	0.0758	0.0000	0.2113
Deep Water Development	0.0861	0.0119	0.0001	0.0549	0.0000	0.1531
Deep Water Exploratory	0.1907	0.0264	0.0003	0.1218	0.0000	0.3392

Average On-site Injection Air Emissions (per model well) - Weighted by Rig Diesel/Natural Gas Percentage Fuel Split (85%/15%) for Electricity Generation

Model Well	Air Emissions (short tons/model well)					
	NO_x	THC	SO_2	CO	TSP	Total
Shallow Water Development	0.0567	0.0078	0.0001	0.0362	0.0000	0.1008
Shallow Water Exploratory	0.1188	0.0164	0.0002	0.0758	0.0000	0.2113
Deep Water Development	0.0861	0.0119	0.0001	0.0549	0.0000	0.1531
Deep Water Exploratory	0.1907	0.0264	0.0003	0.1218	0.0000	0.3392

BAT Non-Water Quality Environmental Impacts: Offshore California Zero Discharge

Region: Offshore California
Technology: Zero Discharge (via Haul and Land Disposal & Offshore/On-Site Cuttings Injection) @ 10.20% CRN

Summary Air Emissions (per model well) - Weighted by Land Disposal/On-site Injection Percentage Split

Model Well	Air Emissions (short tons/model well)						
	NO_x	THC	SO_2	CO	TSP	Total	Total Per Day
Shallow Water Development	0.2994	0.1217	0.0166	0.0817	0.0191	0.5385	0.1036
Shallow Water Exploratory	0.5259	0.2116	0.0275	0.1501	0.0315	0.9466	0.0868
Deep Water Development	0.4042	0.1640	0.0216	0.1134	0.0248	0.7280	0.0922
Deep Water Exploratory	3.6306	1.6696	0.2321	0.7492	0.2677	6.5492	0.3742

Note: Weighted summary air emissions totals assume the land disposal/on-site injection percentage splits are (20%/80%), (20%/80%), (20%/80%), and (100%/0%) for SWD, SWE, DWD, and DWE model wells respectively.

Summary Fuel Usage (per model well) - Weighted by Land Disposal/On-site Injection Percentage Split

Model Well		Fuel Usage Per Model Well		
		Gallons	Barrels of Oil Equivalent (BOE)	Barrels of Oil Equivalent (BOE) per day
Shallow Water Development		3,428.2	81.6	15.7
Shallow Water Exploratory		6,644.4	158.2	14.5
Deep Water Development		4,930.8	117.4	14.9
Deep Water Exploratory		23,403.1	557.2	31.8

Note: Weighted summary fuel usage totals assume the land disposal/on-site injection percentage splits are (20%/80%), (20%/80%), (20%/80%), and (100%/0%) for SWD, SWE, DWD, and DWE model wells respectively.

Note: 1 BOE = 42 gallons of diesel

BAT Non-Water Quality Environmental Impacts: Offshore California Zero Discharge

Region: Offshore California
Technology: Zero Discharge (via Haul and Land Disposal & Offshore/On-Site Cuttings Injection) @ 10.20% CRN

Daily Drill Rig Emissions

Model Well	Air Emissions (short tons/model well)					
	NO_x	THC	SO_2	CO	TSP	Total
Shallow Water Development	3.1570	1.6954	0.2150	0.4525	0.2475	5.7674
Shallow Water Exploratory	3.1570	1.6954	0.2150	0.4525	0.2475	5.7674
Deep Water Development	3.1570	1.6954	0.2150	0.4525	0.2475	5.7674
Deep Water Exploratory	3.1570	1.6954	0.2150	0.4525	0.2475	5.7674

Note: Drill rig emissions include impacts from all rig daily operations and one helicopter trip to and from the rig.

Daily Drill Rig Fuel Usage

Model Well	gallons per model well	Barrels of Oil Equivalent (BOE) per model well
Shallow Water Development	15,388.0	366.4
Shallow Water Exploratory	15,388.0	366.4
Deep Water Development	15,388.0	366.4
Deep Water Exploratory	15,388.0	366.4
TOTAL	61,552.0	1,465.5

CA ZD Daily Emissions/Fuel Usage

Model Well	SBF (Zero Discharge)		WBF (Discharge @ 10.20%)		OBF (Zero Discharge)	
	Total Air Emissions (tons)	Barrels of Oil Equivalent (BOE)	Total Air Emissions (tons)	Barrels of Oil Equivalent (BOE)	Total Air Emissions (tons)	Barrels of Oil Equivalent (BOE)
Shallow Water Development	0.0000	0.0	180.9119	11,538.1	30.5288	1,986.8
Shallow Water Exploratory	0.0000	0.0	252.8128	16,123.7	63.8108	4,151.8
Deep Water Development	0.0000	0.0	0.0000	0.0	0.0000	0.0
Deep Water Exploratory	0.0000	0.0	0.0000	0.0	0.0000	0.0
TOTAL	**0.0**	**0.0**	**433.7**	**27,661.8**	**94.3**	**6,138.6**
			528.1			
			33,800.3			

Note: Summary annual air emission/fuel usage totals assume the following number of SBF wells (existing sources) under this technology option:
0 SWD wells, 0 SWE wells, 0 DWD wells, and 0 DWE wells

Note: Summary annual air emission/fuel usage totals assume the following number of OBF wells (existing sources) under this technology option:
1 SWD wells, 1 SWE wells, 0 DWD wells, and 0 DWE wells

Note: Summary annual air emission/fuel usage totals assume the following number of WBF wells (existing sources) for baseline current practice
3 SWD wells, 2 SWE wells, 0 DWD wells, and 0 DWE wells

Note: 1 BOE = 42 gallons of diesel

BAT Non-Water Quality Environmental Impacts: Offshore California Zero Discharge

Region: Offshore California
Technology: Zero Discharge (via Haul and Land Disposal & Offshore/On-Site Cuttings Injection) @ 10.20% CRN

Annual Air Emissions (SBF BAT3 Model Well - Zero Discharging at 10.20% CRN)

Model Well	Air Emissions (short tons/model well)					
	NO_x	THC	SO_2	CO	TSP	Total
Shallow Water Development	0.0000	0.0000	0.0000	0.0000	0.0000	0.0000
Shallow Water Exploratory	0.0000	0.0000	0.0000	0.0000	0.0000	0.0000
Deep Water Development	0.0000	0.0000	0.0000	0.0000	0.0000	0.0000
Deep Water Exploratory	0.0000	0.0000	0.0000	0.0000	0.0000	0.0000
Total	**0.0000**	**0.0000**	**0.0000**	**0.0000**	**0.0000**	

Annual Air Emissions (OBF Baseline Model Well - Zero Discharging at 10.20% CRN)

Model Well	Air Emissions (short tons/model well)					
	NOx	THC	SO2	CO	TSP	Total
Shallow Water Development	16.7158	8.9378	1.1344	2.4347	1.3061	30.5288
Shallow Water Exploratory	16.9423	18.6914	2.3705	5.0824	2.7293	45.8159
Deep Water Development	0.0000	0.0000	0.0000	0.0000	0.0000	0.0000
Deep Water Exploratory	0.0000	0.0000	0.0000	0.0000	0.0000	0.0000
Total	**33.6581**	**27.6292**	**3.5050**	**7.5171**	**4.0353**	

Annual Air Emissions (WBF Baseline Model Well - Discharging 10.20% CRN)

Model Well	Air Emissions (short tons/model well)					
	NO_x	THC	SO_2	CO	TSP	Total
Shallow Water Development	98.8353	52.9238	6.7288	14.1932	7.7457	180.4268
Shallow Water Exploratory	138.1160	73.9576	9.4031	19.8341	10.8241	252.1349
Deep Water Development	0.0000	0.0000	0.0000	0.0000	0.0000	0.0000
Deep Water Exploratory	0.0000	0.0000	0.0000	0.0000	0.0000	0.0000
Total	**236.9514**	**126.8813**	**16.1319**	**34.0273**	**18.5698**	

Note: Summary annual air emission totals assume the following number of SBF wells (existing sources) under this technology option:
0 SWD wells, 0 SWE wells, 0 DWD wells, and 0 DWE wells

Note: Summary annual air emission totals assume the following number of OBF wells (existing sources) under this technology option:
1 SWD wells, 1 SWE wells, 0 DWD wells, and 0 DWE wells

Note: Summary annual air emission totals assume the following number of WBF wells (existing sources) for baseline current practice
3 SWD wells, 2 SWE wells, 0 DWD wells, and 0 DWE wells

Note: 1 BOE = 42 gallons of diesel

BAT Non-Water Quality Environmental Impacts: Cook Inlet, AK, Zero Discharge

Region: Cook Inlet, AK
Technology: Zero Discharge via Haul and Land Disposal @ 10.20% CRN

Fuel-Consuming Activity	Diesel Fuel Consumed (gal/model well)				Note
	Shallow Water		Deep Water		(All information below is detailed in EPA, 2000 unless otherwise noted.)
	Development	Exploratory	Development	Exploratory	
Baseline Solids Control Equipment	748.8	1,569.6	1,137.6	2,520.0	Baseline equipment include: 4 x 5 hp primary shale shakers, 4 x 5 hp secondary shale shakers, and 1 x 27.5 hp fines removal unit (avg of 5 hp mud cleaner and 50 hp decanting centrifuge).
Regular Supply Boat Transit	0.0	0.0	0.0	0.0	
Dedicated Supply Boat Transit	565.2	1,130.4	1,130.4	2,260.9	
Total Supply Boat Transit	565.2	1,130.4	1,130.4	2,260.9	
Barge Transit	0.0	0.0	0.0	0.0	
Supply Boat Maneuvering	25.3	50.6	50.6	101.2	
Dedicated Supply Boat Loading	3,197.9	6,699.4	4,877.8	10,787.9	Dedicated supply boats are assumed to be moored and idling at the platform until it has reached capacity or until all SBF generated cuttings from the drilling operation are loaded.
Regular Supply Boat Loading	0.0	0.0	0.0	0.0	
Supply Boat Auxiliary Generator (in Port Demurrage)	144.0	288.0	288.0	576.0	
Supply Boat Cranes	383.2	803.0	579.8	1,286.2	
Barge Cranes	0.0	0.0	0.0	0.0	
Trucks	8,250.0	17,050.0	12,100.0	26,950.0	
Subtotal	13,314.4	27,591.1	20,164.2	44,482.1	

BAT Non-Water Quality Environmental Impacts: Cook Inlet, AK, Zero Discharge

Region: Cook Inlet, AK
Technology: Zero Discharge via Haul and Land Disposal @ 10.20% CRN

Fuel-Consuming Activity	Diesel Fuel Consumed (gal/model well)				Note (All information below is detailed in EPA, 2000 unless otherwise noted.)
	Shallow Water		Deep Water		
	Development	Exploratory	Development	Exploratory	
On-shore Disposal (Landfarming)					
Wheel Tractor for Grading at Landfarm	13.4	13.4	13.4	13.4	
Dozer/Loader for Spreading Waste at Landfarm	352.0	352.0	352.0	352.0	
On-shore Landfarming Subtotal:	365.4	365.4	365.4	365.4	
On-shore Disposal (Injection)					
Cuttings Transfer	4.4	9.2	6.7	14.8	Hours of operation equals the cuttings waste volume divided by cuttings injection rate (bbl/hr). The transfer equipment utilizes one (1) 100 hp vacuum pump.
Cuttings Grinding/Processing	4.4	9.2	6.7	14.8	Hours of operation equals the cuttings waste volume divided by cuttings injection rate (bbl/hr). Total power utilized by the grinding and processing equipment is 120 hp.
Cuttings Injection	4.4	9.2	6.7	14.8	Hours of operation equals the cuttings waste volume divided by cuttings injection rate (bbl/hr).
On-shore Injection Subtotal:	13.2	27.7	20.0	44.5	
On-shore Disposal Subtotal:	0.0	0.0	0.0	0.0	Weighted average using landfarming/on-shore injection percentage split (0%/0%) of offshore wastes sent on-shore
TOTAL Diesel Per Well (Gal)	13,314.4	27,591.1	20,164.2	44,482.1	

BAT Non-Water Quality Environmental Impacts: Cook Inlet, AK, Zero Discharge

Region: Cook Inlet, AK
Technology: Zero Discharge via Haul and Land Disposal @ 10.20% CRN

Energy-Consuming Activity	Energy Requirements (hp-hr/model well)				Note (All information below is detailed in EPA, 2000 unless otherwise noted.)
	Shallow Water		Deep Water		
	Development	Exploratory	Development	Exploratory	
Baseline Solids Control Equipment	8,424.0	17,658.0	12,798.0	28,350.0	Baseline equipment include: 4 x 5 hp primary shale shakers, 4 x 5 hp secondary shale shakers, and 1 x 27.5 hp fines removal unit (avg of 5 hp mud cleaner and 50 hp decanting centrifuge).
Supply Boat Auxiliary Generator (in Port Demurrage)	1,440.0	2,880.0	2,880.0	5,760.0	
Supply Boat Cranes	6,256.0	13,110.4	9,465.6	20,998.4	
Barge Cranes	0.0	0.0	0.0	0.0	
On-shore Disposal (Injection)					
Cuttings Transfer	73.5	153.9	111.2	247.2	EPA assumes that all onshore cuttings injection facility equipment use diesel (Fall 1999 Field Trip)
Cuttings Grinding/Proc.	88.1	184.7	133.4	296.6	
Cuttings Injection	899.9	1,885.7	1,361.7	3,027.7	
Total Power Requirements (per model well) for Seven Selected Energy-Consuming Activities (hp):	17,181.5	35,872.8	26,749.9	58,679.8	These seven energy-consuming activities were selected for inclusion in this table as their air emission factors are given in terms of mass/power-time (g/bhp-hr).

BAT Non-Water Quality Environmental Impacts: Cook Inlet, AK, Zero Discharge

Region: Cook Inlet, AK
Technology: Zero Discharge via Haul and Land Disposal @ 10.20% CRN

Shallow Water Development (SWD) Well Air Emissions

Air Emission Activity	Air Emissions (short tons/model well)					
	NO_x	THC	SO_2	CO	TSP	Total
Baseline Solids Control Equipment						
Diesel Fuel Source	0.1300	0.0104	0.0086	0.0281	0.0093	0.1865
Natural Gas Fuel Source	0.0121	0.0017	0.0000	0.0077	0.0000	0.0215
Baseline Solids Control Subtotal	0.0121	0.0017	0.0000	0.0077	0.0000	0.0215
Supply Boats						
Transit	0.1107	0.0475	0.0080	0.0221	0.0093	0.1977
Maneuvering	0.0053	0.0029	0.0004	0.0008	0.0004	0.0097
Loading	0.6709	0.3614	0.0455	0.0956	0.0528	1.2262
Demurrage	0.0222	0.0018	0.0015	0.0048	0.0016	0.0319
Cranes	0.0965	0.0077	0.0064	0.0209	0.0069	0.1385
Barge						
Transit	0.0000	0.0000	0.0000	0.0000	0.0000	0.0000
Cranes	0.0000	0.0000	0.0000	0.0000	0.0000	0.0000
Trucks	0.4085	0.0906	0.0000	0.3103	0.0000	0.8094
On-shore Disposal (Landfarming)						
Wheel Tractor	0.0051	0.0008	0.0004	0.0144	0.0005	0.0211
Dozer/Loader	0.0066	0.0008	0.0006	0.0016	0.0005	0.0101
On-shore Disposal (Injection)						
Cuttings Transfer	0.0011	0.0001	0.0001	0.0002	0.0001	0.0016
Cuttings Grinding/Proc.	0.0014	0.0001	0.0001	0.0003	0.0001	0.0020
Cuttings Injection	0.0139	0.0011	0.0009	0.0030	0.0010	0.0199
Onshore Diposal Subtotal	0.0000	0.0000	0.0000	0.0000	0.0000	0.0000
Total Per Well	1.3263	0.5135	0.0619	0.4622	0.0710	2.4348

Note: On-shore Injection air emissions assume that diesel engines are use for electricity generation

BAT Non-Water Quality Environmental Impacts: Cook Inlet, AK, Zero Discharge

Region: Cook Inlet, AK
Technology: Zero Discharge via Haul and Land Disposal @ 10.20% CRN

Shallow Water Exploratory (SWE) Well Air Emissions

Air Emission Activity	Air Emissions (short tons/model well)					
	NO_x	THC	SO_2	CO	TSP	Total
Baseline Solids Control Equipment						
Diesel Fuel Source	0.2725	0.0218	0.0181	0.0590	0.0195	0.3909
Natural Gas Fuel Source	0.0253	0.0035	0.0000	0.0162	0.0000	0.0450
Baseline Solids Control Subtotal	0.0253	0.0035	0.0000	0.0162	0.0000	0.0450
Supply Boats						
Transit	0.2214	0.0950	0.0161	0.0443	0.0187	0.3954
Maneuvering	0.0106	0.0057	0.0007	0.0015	0.0008	0.0194
Loading	1.4055	0.7570	0.0954	0.2003	0.1105	2.5688
Demurrage	0.0444	0.0036	0.0030	0.0096	0.0032	0.0637
Cranes	0.2023	0.0162	0.0135	0.0438	0.0145	0.2902
Barge						
Transit	0.0000	0.0000	0.0000	0.0000	0.0000	0.0000
Cranes	0.0000	0.0000	0.0000	0.0000	0.0000	0.0000
Trucks	0.8442	0.1872	0.0000	0.6413	0.0000	1.6727
On-shore Disposal (Landfarming)						
Wheel Tractor	0.0051	0.0008	0.0004	0.0144	0.0005	0.0211
Dozer/Loader	0.0066	0.0008	0.0006	0.0016	0.0005	0.0101
On-shore Disposal (Injection)						
Cuttings Transfer	0.0024	0.0002	0.0002	0.0005	0.0002	0.0034
Cuttings Grinding/Proc.	0.0029	0.0002	0.0002	0.0006	0.0002	0.0041
Cuttings Injection	0.0291	0.0023	0.0019	0.0063	0.0021	0.0417
Onshore Diposal Subtotal	0.0000	0.0000	0.0000	0.0000	0.0000	0.0000
Total Per Well	2.7539	1.0681	0.1287	0.9569	0.1477	5.0552

Note: On-shore Injection air emissions assume that diesel engines are use for electricity generation

BAT Non-Water Quality Environmental Impacts: Cook Inlet, AK, Zero Discharge

Region: Cook Inlet, AK
Technology: Zero Discharge via Haul and Land Disposal @ 10.20% CRN

Deep Water Development (DWD) Well Air Emissions

Air Emission Activity	Air Emissions (short tons/model well)					
	NO_x	THC	SO_2	CO	TSP	Total
Baseline Solids Control Equipment						
Diesel Fuel Source	0.1975	0.0158	0.0131	0.0427	0.0141	0.2833
Natural Gas Fuel Source	0.0183	0.0025	0.0000	0.0117	0.0000	0.0326
Baseline Solids Control Subtotal	0.0183	0.0025	0.0000	0.0117	0.0000	0.0326
Supply Boats						
Transit	0.2214	0.0950	0.0161	0.0443	0.0187	0.3954
Maneuvering	0.0106	0.0057	0.0007	0.0015	0.0008	0.0194
Loading	1.0234	0.5512	0.0695	0.1458	0.0805	1.8704
Demurrage	0.0444	0.0036	0.0030	0.0096	0.0032	0.0637
Cranes	0.1461	0.0117	0.0097	0.0316	0.0104	0.2095
Barge						
Transit	0.0000	0.0000	0.0000	0.0000	0.0000	0.0000
Cranes	0.0000	0.0000	0.0000	0.0000	0.0000	0.0000
Trucks	0.5991	0.1328	0.0000	0.4551	0.0000	1.1871
On-shore Disposal (Landfarming)						
Wheel Tractor	0.0051	0.0008	0.0004	0.0144	0.0005	0.0211
Dozer/Loader	0.0066	0.0008	0.0006	0.0016	0.0005	0.0101
On-shore Disposal (Injection)						
Cuttings Transfer	0.0017	0.0001	0.0001	0.0004	0.0001	0.0025
Cuttings Grinding/Proc.	0.0021	0.0002	0.0001	0.0004	0.0001	0.0030
Cuttings Injection	0.0210	0.0017	0.0014	0.0045	0.0015	0.0301
Onshore Diposal Subtotal	0.0000	0.0000	0.0000	0.0000	0.0000	0.0000
Total Per Well	2.0634	0.8025	0.0990	0.6996	0.1136	3.7781

Note: On-shore Injection air emissions assume that diesel engines are use for electricity generation

BAT Non-Water Quality Environmental Impacts: Cook Inlet, AK, Zero Discharge

Region: Cook Inlet, AK
Technology: Zero Discharge via Haul and Land Disposal @ 10.20% CRN

Deep Water Exploratory (DWE) Well Air Emissions

Air Emission Activity	Air Emissions (short tons/model well)					
	NO_x	THC	SO_2	CO	TSP	Total
Baseline Solids Control Equipment						
Diesel Fuel Source	0.4375	0.0350	0.0291	0.0947	0.0313	0.6275
Natural Gas Fuel Source	0.0406	0.0056	0.0001	0.0259	0.0000	0.0723
Baseline Solids Control Subtotal	0.0406	0.0056	0.0001	0.0259	0.0000	0.0723
Supply Boats						
Transit	0.4428	0.1899	0.0322	0.0885	0.0373	0.7907
Maneuvering	0.0212	0.0114	0.0014	0.0030	0.0017	0.0388
Loading	2.2633	1.2190	0.1536	0.3226	0.1780	4.1365
Demurrage	0.0889	0.0071	0.0059	0.0192	0.0063	0.1275
Cranes	0.3240	0.0259	0.0215	0.0701	0.0231	0.4648
Barge						
Transit	0.0000	0.0000	0.0000	0.0000	0.0000	0.0000
Cranes	0.0000	0.0000	0.0000	0.0000	0.0000	0.0000
Trucks	1.3344	0.2959	0.0000	1.0136	0.0000	2.6439
On-shore Disposal (Landfarming)						
Wheel Tractor	0.0051	0.0008	0.0004	0.0144	0.0005	0.0211
Dozer/Loader	0.0066	0.0008	0.0006	0.0016	0.0005	0.0101
On-shore Disposal (Injection)						
Cuttings Transfer	0.0038	0.0003	0.0003	0.0008	0.0003	0.0055
Cuttings Grinding/Proc.	0.0046	0.0004	0.0003	0.0010	0.0003	0.0066
Cuttings Injection	0.0467	0.0037	0.0031	0.0101	0.0033	0.0670
Onshore Diposal Subtotal	0.0000	0.0000	0.0000	0.0000	0.0000	0.0000
Total Per Well	4.5153	1.7549	0.2148	1.5430	0.2465	8.2745

Note: On-shore Injection air emissions assume that diesel engines are use for electricity generation

BAT Non-Water Quality Environmental Impacts: Cook Inlet, AK, Zero Discharge

Region: Cook Inlet, AK
Technology: Zero Discharge via Offshore/On-Site Cuttings Injection @ 10.20% CRN

On-site Injection Diesel Fuel Requirements (per model well)

Fuel-Consuming Activity	Diesel Fuel Consumed (gal/model well)				Note (All information below is detailed in EPA, 2000 unless otherwise noted.)
	Shallow Water		Deep Water		
	Development	Exploratory	Development	Exploratory	
Baseline Solids Control Equipment	748.8	1,569.6	1,137.6	2,520.0	Baseline equipment include: 4 x 5 hp primary shale shakers, 4 x 5 hp secondary shale shakers, and 1 x 27.5 hp fines removal unit (avg of 5 hp mud cleaner and 50 hp decanting centrifuge).
Offshore Injection Disposal					
Cuttings Transfer	748.8	1,569.6	1,137.6	2,520.0	Hours of operation equals the drilling length in days (x 24 hr/day). The transfer equipment utilizes one (1) 100 hp vacuum pump.
Cuttings Grinding/Proc.	748.8	1,569.6	1,137.6	2,520.0	Hours of operation equals the drilling length in days (x 24 hr/day). Total power utilized by the grinding and processing equipment is 120 hp.
Cuttings Injection	36.7	76.8	55.5	123.4	Hours of operation equals the cuttings waste volume divided by cuttings injection rate (bbl/hr).Total power utilized by the grinding and processing equipment is 600 hp.
TOTAL Diesel Per Well (Gal)	2,283.1	4,785.6	3,468.3	7,683.4	

On-site Injection Energy Requirements (per model well)

Energy-Consuming Activity	Energy Requirements (hp-hr/model well)				Note (All information below is detailed in EPA, 2000 unless otherwise noted.)
	Shallow Water		Deep Water		
	Development	Exploratory	Development	Exploratory	
Baseline Solids Control Equipment	8,424.0	17,658.0	12,798.0	28,350.0	
Offshore Injection Disposal					
Cuttings Transfer	12,480.0	26,160.0	18,960.0	42,000.0	
Cuttings Grinding/Proc.	14,976.0	31,392.0	22,752.0	50,400.0	
Cuttings Pump Injection	3,667.0	7,684.5	5,549.2	12,338.1	
Total Power Requirements (per model well) for Four Activities (hp):	39,547.0	82,894.5	60,059.2	133,088.1	These four energy-consuming activities were selected for inclusion in this table as their air emission factors are given in terms of mass/power-time (g/bhp-hr).

BAT Non-Water Quality Environmental Impacts: Cook Inlet, AK, Zero Discharge

Region: Cook Inlet, AK
Technology: Zero Discharge via Offshore/On-Site Cuttings Injection @ 10.20% CRN

On-site Injection Air Emissions (per model well) - Rig Fuel Type for Electricity Generation (Diesel)

Model Well	Air Emissions (short tons/model well)					
	NO_x	THC	SO_2	CO	TSP	Total
Shallow Water Development	0.6103	0.0488	0.0406	0.1321	0.0436	0.8754
Shallow Water Exploratory	1.2792	0.1023	0.0851	0.2769	0.0914	1.8349
Deep Water Development	0.9268	0.0741	0.0616	0.2006	0.0662	1.3294
Deep Water Exploratory	2.0538	0.1643	0.1366	0.4445	0.1467	2.9459

On-site Injection Air Emissions (per model well) - Rig Fuel Type for Electricity Generation (Natural Gas)

Model Well	Air Emissions (short tons/model well)					
	NO_x	THC	SO_2	CO	TSP	Total
Shallow Water Development	0.0567	0.0078	0.0001	0.0362	0.0000	0.1008
Shallow Water Exploratory	0.1188	0.0164	0.0002	0.0758	0.0000	0.2113
Deep Water Development	0.0861	0.0119	0.0001	0.0549	0.0000	0.1531
Deep Water Exploratory	0.1907	0.0264	0.0003	0.1218	0.0000	0.3392

Average On-site Injection Air Emissions (per model well) - Weighted by Rig Diesel/Natural Gas Percentage Fuel Split (85%/15%) for Electricity Generation

Model Well	Air Emissions (short tons/model well)					
	NO_x	THC	SO_2	CO	TSP	Total
Shallow Water Development	0.0567	0.0078	0.0001	0.0362	0.0000	0.1008
Shallow Water Exploratory	0.1188	0.0164	0.0002	0.0758	0.0000	0.2113
Deep Water Development	0.0861	0.0119	0.0001	0.0549	0.0000	0.1531
Deep Water Exploratory	0.1907	0.0264	0.0003	0.1218	0.0000	0.3392

BAT Non-Water Quality Environmental Impacts: Cook Inlet, AK, Zero Discharge

Region: Cook Inlet, AK
Technology: Zero Discharge (via Haul and Land Disposal & Offshore/On-Site Cuttings Injection) @ 10.20% CRN

Summary Air Emissions (per model well) - Weighted by Land Disposal/On-site Injection Percentage Split

Model Well	Air Emissions (short tons/model well)						
	NO_x	THC	SO_2	CO	TSP	Total	Total Per Day
Shallow Water Development	0.0567	0.0078	0.0001	0.0362	0.0000	0.1008	0.0194
Shallow Water Exploratory	0.1188	0.0164	0.0002	0.0758	0.0000	0.2113	0.0194
Deep Water Development	0.0000	0.0000	0.0000	0.0000	0.0000	0.0000	0.0000
Deep Water Exploratory	0.0000	0.0000	0.0000	0.0000	0.0000	0.0000	0.0000

Note: Weighted summary air emissions totals assume the land disposal/on-site injection percentage splits are (0%/100%), (0%/100%), (0%/0%), and (0%/0%) for SWD, SWE, DWD, and DWE model wells respectively.

Summary Fuel Usage (per model well) - Weighted by Land Disposal/On-site Injection Percentage Split

Model Well		Fuel Usage Per Model Well		
		Gallons	Barrels of Oil Equivalent (BOE)	Barrels of Oil Equivalent (BOE) per day
Shallow Water Development		2,283.1	54.4	10.5
Shallow Water Exploratory		4,785.6	113.9	10.5
Deep Water Development		0.0	0.0	0.0
Deep Water Exploratory		0.0	0.0	0.0

Note: Weighted summary fuel usage totals assume the land disposal/on-site injection percentage splits are (0%/100%), (0%/100%), (0%/0%), and (0%/0%) for SWD, SWE, DWD, and DWE model wells respectively.

Note: 1 BOE = 42 gallons of diesel

BAT Non-Water Quality Environmental Impacts: Cook Inlet, AK, Zero Discharge

Region: Cook Inlet, AK
Technology: Zero Discharge (via Haul and Land Disposal & Offshore/On-Site Cuttings Injection) @ 10.20% CRN

Daily Drill Rig Emissions

Model Well	Air Emissions (short tons/model well)					
	NO_x	THC	SO_2	CO	TSP	Total
Shallow Water Development	3.1570	1.6954	0.2150	0.4525	0.2475	5.7674
Shallow Water Exploratory	3.1570	1.6954	0.2150	0.4525	0.2475	5.7674
Deep Water Development	3.1570	1.6954	0.2150	0.4525	0.2475	5.7674
Deep Water Exploratory	3.1570	1.6954	0.2150	0.4525	0.2475	5.7674

Note: Drill rig emissions include impacts from all rig daily operations and one helicopter trip to and from the rig.

Daily Drill Rig Fuel Usage

Model Well	gallons per model well	Barrels of Oil Equivalent (BOE) per model well
Shallow Water Development	15,388.0	366.4
Shallow Water Exploratory	15,388.0	366.4
Deep Water Development	15,388.0	366.4
Deep Water Exploratory	15,388.0	366.4
TOTAL	61,552.0	1,465.5

AK ZD Daily Emissions/Fuel Usage

Model Well	SBF (Zero Discharge)		WBF (Discharge @ 10.20%)		OBF (Zero Discharge)	
	Total Air Emissions (tons)	Barrels of Oil Equivalent (BOE)	Total Air Emissions (tons)	Barrels of Oil Equivalent (BOE)	Total Air Emissions (tons)	Barrels of Oil Equivalent (BOE)
Shallow Water Development	0.0000	0.0	180.9119	11,538.1	30.0911	1,959.5
Shallow Water Exploratory	0.0000	0.0	126.4064	8,061.8	63.0755	4,107.5
Deep Water Development	0.0000	0.0	0.0000	0.0	0.0000	0.0
Deep Water Exploratory	0.0000	0.0	0.0000	0.0	0.0000	0.0
TOTAL	**0.0**	**0.0**	**307.3**	**19,599.9**	**93.2**	**6,067.0**
			400.5			
			25,666.9			

Note: Summary annual air emission/fuel usage totals assume the following number of SBF wells (existing sources) under the zero discharge option:
0 SWD wells, 0 SWE wells, 0 DWD wells, and 0 DWE wells

Note: Summary annual air emission/fuel usage totals assume the following number of OBF wells (existing sources) under the zero discharge option:
under this technology option: 1 SWD wells, 1 SWE wells, 0 DWD wells, and 0 DWE wells

Note: Summary annual air emission/fuel usage totals assume the following number of WBF wells (existing sources) under the zero discharge opttion:
under this technology option: 3 SWD wells, 1 SWE wells, 0 DWD wells, and 0 DWE wells

Note: 1 BOE = 42 gallons of diesel

BAT Non-Water Quality Environmental Impacts: Cook Inlet, AK, Zero Discharge

Region: Cook Inlet, AK
Technology: Zero Discharge (via Haul and Land Disposal & Offshore/On-Site Cuttings Injection) @ 10.20% CRN

Annual Air Emissions (SBF BAT3 Model Well - Zero Discharging at 10.20% CRN)

Model Well	Air Emissions (short tons/model well)					
	NO_x	THC	SO_2	CO	TSP	Total
Shallow Water Development	0.0000	0.0000	0.0000	0.0000	0.0000	0.0000
Shallow Water Exploratory	0.0000	0.0000	0.0000	0.0000	0.0000	0.0000
Deep Water Development	0.0000	0.0000	0.0000	0.0000	0.0000	0.0000
Deep Water Exploratory	0.0000	0.0000	0.0000	0.0000	0.0000	0.0000
Total	**0.0000**	**0.0000**	**0.0000**	**0.0000**	**0.0000**	

Annual Air Emissions (OBF BAT3 Model Well - Zero Discharging at 10.20% CRN)

Model Well	Air Emissions (short tons/model well)					
	NOx	THC	SO2	CO	TSP	Total
Shallow Water Development	16.4731	8.8239	1.1179	2.3892	1.2870	30.0911
Shallow Water Exploratory	16.5352	8.8325	1.1180	2.4288	1.2870	30.2015
Deep Water Development	0.0000	0.0000	0.0000	0.0000	0.0000	0.0000
Deep Water Exploratory	0.0000	0.0000	0.0000	0.0000	0.0000	0.0000
Total	**33.0083**	**17.6565**	**2.2359**	**4.8180**	**2.5740**	

Annual Air Emissions (WBF BAT3 Model Well - Discharging at 10.20% CRN)

Model Well	Air Emissions (short tons/model well)					
	NO_x	THC	SO_2	CO	TSP	Total
Shallow Water Development	98.8353	52.9238	6.7288	14.1932	7.7457	180.4268
Shallow Water Exploratory	69.0580	36.9788	4.7015	9.9171	5.4120	126.0674
Deep Water Development	0.0000	0.0000	0.0000	0.0000	0.0000	0.0000
Deep Water Exploratory	0.0000	0.0000	0.0000	0.0000	0.0000	0.0000
Total	**167.8934**	**89.9025**	**11.4303**	**24.1103**	**13.1577**	

Note: Summary annual air emission totals assume the following number of SBF wells (existing sources) under the zero discharge option:
0 SWD wells, 0 SWE wells, 0 DWD wells, and 0 DWE wells

Note: Summary annual air emission totals assume the following number of OBF wells (existing sources) under the zero discharge option:
under this technology option: 1 SWD wells, 1 SWE wells, 0 DWD wells, and 0 DWE wells

Note: Summary annual air emission totals assume the following number of WBF wells (existing sources) under the zero discharge option:
under this technology option: 3 SWD wells, 1 SWE wells, 0 DWD wells, and 0 DWE wells

NSPS Non-Water Quality Environmental Impacts: Baseline Current Practice

Region: Offshore Gulf of Mexico (GOM)
Technology: SBF Discharges from Baseline Solids Control System (e.g., Shale Shakers & Fines Removal Unit) at 10.20% CRN

Fuel-Consuming Activity	Diesel Fuel Consumed (gal/model well)				Note (All information below is detailed in EPA, 2000 unless otherwise noted.)
	Shallow Water		Deep Water		
	Development	Exploratory	Development	Exploratory	
Baseline Solids Control Equipment	748.8	1,569.6	1,137.6	2,520.0	Baseline equipment fuel usage is 6 gal-diesel/hr
TOTAL Per Model Well	748.8	1,569.6	1,137.6	2,520.0	

Energy-Consuming Activity	Energy Requirements (hp-hr/model well)				Note (All information below is detailed in EPA, 2000 unless otherwise noted.)
	Shallow Water		Deep Water		
	Development	Exploratory	Development	Exploratory	
Baseline Solids Control Equipment	8,424.0	17,658.0	12,798.0	28,350.0	Baseline equipment include: 4 x 5 hp primary shale shakers, 4 x 5 hp secondary shale shakers, and 1 x 27.5 hp fines removal unit (avg of 5 hp mud cleaner and 50 hp decanting centrifuge).
TOTAL Per Model Well	8,424.0	17,658.0	12,798.0	28,350.0	

NSPS Non-Water Quality Environmental Impacts: Baseline Current Practice

Region: Offshore Gulf of Mexico (GOM)
Technology: SBF Discharges from Baseline Solids Control System (e.g., Shale Shakers & Fines Removal Unit) at 10.20% CRN

Baseline Solids Control Air Emissions (per model well) - Rig Fuel Type for Electricity Generation (Diesel)

Model Well	Air Emissions (short tons/model well)					
	NO_x	THC	SO_2	CO	TSP	Total
Shallow Water Development	0.1300	0.0104	0.0086	0.0281	0.0093	0.1865
Shallow Water Exploratory	0.2725	0.0218	0.0181	0.0590	0.0195	0.3909
Deep Water Development	0.1975	0.0158	0.0131	0.0427	0.0141	0.2833
Deep Water Exploratory	0.4375	0.0350	0.0291	0.0947	0.0313	0.6275

Baseline Solids Control Air Emissions (per model well) - Rig Fuel Type for Electricity Generation (Natural Gas)

Model Well	Air Emissions (short tons/model well)					
	NO_x	THC	SO_2	CO	TSP	Total
Shallow Water Development	0.0121	0.0017	0.0000	0.0077	0.0000	0.0215
Shallow Water Exploratory	0.0253	0.0035	0.0000	0.0162	0.0000	0.0450
Deep Water Development	0.0183	0.0025	0.0000	0.0117	0.0000	0.0326
Deep Water Exploratory	0.0406	0.0056	0.0001	0.0259	0.0000	0.0723

Average Baseline Solids Control Air Emissions (per model well) - Weighted by Rig Diesel/Natural Gas Percentage Fuel Split (85%/15%)

Model Well	Air Emissions (short tons/model well)						
	NO_x	THC	SO_2	CO	TSP	Total	Total Per Day
Shallow Water Development	0.1123	0.0091	0.0074	0.0251	0.0079	0.1617	0.0311
Shallow Water Exploratory	0.2354	0.0191	0.0154	0.0526	0.0165	0.3390	0.0311
Deep Water Development	0.1706	0.0138	0.0112	0.0381	0.0120	0.2457	0.0311
Deep Water Exploratory	0.3780	0.0306	0.0247	0.0844	0.0266	0.5442	0.0311
Total per day	**0.0864**	**0.0070**	**0.0057**	**0.0193**	**0.0061**		

Air Emissions (OBF Baseline Model Well - Zero Discharging at 10.20% CRN)

Model Well	Air Emissions (short tons/model well)						
	NOx	THC	SO2	CO	TSP	Total	Total Per Day
Shallow Water Development	1.3055	0.5276	0.0904	0.2386	0.1033	2.2654	0.4357
Shallow Water Exploratory	2.3187	0.9267	0.1591	0.4150	0.1813	4.0009	0.3671
Deep Water Development	1.9402	0.8441	0.1340	0.3395	0.1537	3.4116	0.4318
Deep Water Exploratory	4.3481	1.8858	0.3004	0.7592	0.3444	7.6379	0.4365
Total per day	**0.9579**	**0.4011**	**0.0661**	**0.1703**	**0.0756**		

Daily Drill Rig Emissions

Model Well	Air Emissions (short tons/model well)					
	NO_x	THC	SO_2	CO	TSP	Total
Shallow Water Development	3.1570	1.6954	0.2150	0.4525	0.2475	5.7674
Shallow Water Exploratory	3.1570	1.6954	0.2150	0.4525	0.2475	5.7674
Deep Water Development	3.1570	1.6954	0.2150	0.4525	0.2475	5.7674
Deep Water Exploratory	3.1570	1.6954	0.2150	0.4525	0.2475	5.7674
Total per day	**12.6280**	**6.7816**	**0.8598**	**1.8100**	**0.9900**	

NSPS Non-Water Quality Environmental Impacts: Baseline Current Practice

Region: Offshore Gulf of Mexico (GOM)
Technology: SBF Discharges from Baseline Solids Control System (e.g., Shale Shakers & Fines Removal Unit) at 10.20% CRN

Daily Drill Rig Fuel Usage

Model Well	gallons per model well	Barrels of Oil Equivalent (BOE) per model well
Shallow Water Development	15,388.0	366.4
Shallow Water Exploratory	15,388.0	366.4
Deep Water Development	15,388.0	366.4
Deep Water Exploratory	15,388.0	366.4
TOTAL	61,552.0	1,465.5

GOM Baseline Annual Emissions/Fuel Usage

Model Well	SBF (Discharge @ 10.20%)		OBF (Zero Discharge)		WBF (Discharge @ 10.20%)		WBF (Zero Discharge)	
	Total Air Emissions (tons)	Barrels of Oil Equivalent (BOE)	Total Air Emissions (tons)	Barrels of Oil Equivalent (BOE)	Total Air Emissions (tons)	Barrels of Oil Equivalent (BOE)	Total Air Emissions (tons)	Barrels of Oil Equivalent (BOE)
Shallow Water Development	150.7599	9,615.0	64.5114	4,122.3	1,628.2074	103,842.5	0.0000	0.0
Shallow Water Exploratory	0.0000	0.0	0.0000	0.0	0.0000	0.0	0.0000	0.0
Deep Water Development	452.2798	43,822.4	0.0000	0.0	1,007.7722	64,272.9	0.0000	0.0
Deep Water Exploratory	0.0000	0.0	0.0000	0.0	0.0000	0.0	0.0000	0.0
TOTAL	**603.0**	**53,437.5**	**64.5**	**4,122.3**	**2,636.0**	**168,115.4**	**0.0**	**0.0**
	3,239.0							
	221,552.9							

Note: Summary annual fuel usage totals assume the following number of GOM SBF wells (existing sources) under this technology option: 5 SWD wells, 0 SWE wells, 15 DWD wells, and 0 DWE wells

Note: Summary annual fuel usage totals assume the following number of GOM OBF wells (existing sources) will be subject to zero discharge under this technology option: 2 SWD wells, 0 SWE wells, 0 DWD wells, and 0 DWE wells

Note: Summary annual fuel usage totals assume the following number of GOM WBF wells (existing sources) under this technology option: 27 SWD wells, 0 SWE wells, 11 DWD wells, and 0 DWE wells

Note: 1 BOE = 42 gallons of diesel

NSPS Non-Water Quality Environmental Impacts: Baseline Current Practice

Region: Offshore Gulf of Mexico (GOM)
Technology: SBF Discharges from Baseline Solids Control System (e.g., Shale Shakers & Fines Removal Unit) at 10.20% CRN

Annual Air Emissions (SBF Baseline Model Well - Discharging at 10.20% CRN)

Model Well	Air Emissions (short tons/model well)					
	NO_x	THC	SO_2	CO	TSP	Total
Shallow Water Development	82.6436	44.1259	5.6257	11.8904	6.4745	150.7599
Shallow Water Exploratory	0.0000	0.0000	0.0000	0.0000	0.0000	0.0000
Deep Water Development	376.6639	201.1121	25.6403	54.1926	29.5086	687.1174
Deep Water Exploratory	0.0000	0.0000	0.0000	0.0000	0.0000	0.0000
Total	**459.3074**	**245.2379**	**31.2660**	**66.0829**	**35.9831**	

Annual Air Emissions (OBF Baseline Model Well - Zero Discharging at 10.20% CRN)

Model Well	Air Emissions (short tons/model well)					
	NOx	THC	SO2	CO	TSP	Total
Shallow Water Development	35.4439	18.6873	2.4164	5.1833	2.7805	64.5114
Shallow Water Exploratory	0.0000	0.0000	0.0000	0.0000	0.0000	0.0000
Deep Water Development	0.0000	0.0000	0.0000	0.0000	0.0000	0.0000
Deep Water Exploratory	0.0000	0.0000	0.0000	0.0000	0.0000	0.0000
Total	**35.4439**	**18.6873**	**2.4164**	**5.1833**	**2.7805**	

Annual Air Emissions (WBF Baseline Model Well - Discharging at 10.20% CRN)

Model Well	Air Emissions (short tons/model well)					
	NO_x	THC	SO_2	CO	TSP	Total
Shallow Water Development	446.2752	238.2796	30.3789	64.2079	34.9621	814.1037
Shallow Water Exploratory	0.0000	0.0000	0.0000	0.0000	0.0000	0.0000
Deep Water Development	276.2202	147.4822	18.8029	39.7412	21.6397	503.8861
Deep Water Exploratory	0.0000	0.0000	0.0000	0.0000	0.0000	0.0000
Total	**722.4954**	**385.7618**	**49.1817**	**103.9492**	**56.6018**	

Note: Summary annual air emission totals assume the following number of GOM SBF wells (existing sources) under this technology option: 5 SWD wells, 0 SWE wells, 15 DWD wells, and 0 DWE wells

Note: Summary annual air emission totals assume the following number of GOM OBF wells (existing sources) will be subject to zero discharge under this technology option: 2 SWD wells, 0 SWE wells, 0 DWD wells, and 0 DWE wells

Note: Summary annual air emissions totals assume the following number of GOM WBF wells (existing sources) under this technology option: 27 SWD wells, 0 SWE wells, 11 DWD wells, and 0 DWE wells

Worksheet No. 21 **Page 1 of 4**

NSPS Non-Water Quality Environmental Impacts: NSPS Option 1

Region: Offshore Gulf of Mexico (GOM)

Technology: SBF Discharges from NSPS Solids Control System (e.g., Cuttings Dryer & Fines Removal Unit) at 4.03% CRN

Fuel-Consuming Activity	Diesel Fuel Consumed (gal/model well)				Note (All information below is detailed in EPA, 2000 unless otherwise noted.)
	Shallow Water		Deep Water		
	Development	Exploratory	Development	Exploratory	
Baseline Solids Control Equipment	748.8	1,569.6	1,137.6	2,520.0	Baseline equipment fuel usage is 6 gal-diesel/hr
Improved Solids Control Equipment (e.g., Cuttings Dryer)	748.8	1,569.6	1,137.6	2,520.0	Cuttings dryer equipment fuel usage is 6 gal-diesel/hr
TOTAL Per Model Well	1,497.6	3,139.2	2,275.2	5,040.0	

Energy-Consuming Activity	Energy Requirements (hp-hr/model well)				Note (All information below is detailed in EPA, 2000 unless otherwise noted.)
	Shallow Water		Deep Water		
	Development	Exploratory	Development	Exploratory	
Baseline Solids Control Equipment	8,424.0	17,658.0	12,798.0	28,350.0	Baseline equipment include: 4 x 5 hp primary shale shakers, 4 x 5 hp secondary shale shakers, and 1 x 27.5 hp fines removal unit (avg of 5 hp mud cleaner and 50 hp decanting centrifuge).
Improved Solids Control Equipment (e.g., Cuttings Dryer)	14,098.7	29,553.0	21,419.1	47,447.4	Average of MUD-10 (38.22 hp) and vertical centrifuge (187.72 hp)
TOTAL Per Model Well	22,522.7	47,211.0	34,217.1	75,797.4	

NSPS Non-Water Quality Environmental Impacts: NSPS Option 1

Region: Offshore Gulf of Mexico (GOM)
Technology: SBF Discharges from NSPS Solids Control System (e.g., Cuttings Dryer & Fines Removal Unit) at 4.03% CRN

NSPS Option 1 Solids Control Air Emissions (per model well) - Rig Fuel Type for Electricity Generation (Diesel)

Model Well	Air Emissions (short tons/model well)					
	NO_x	THC	SO_2	CO	TSP	Total
Shallow Water Development	0.3476	0.0278	0.0231	0.0752	0.0248	0.4985
Shallow Water Exploratory	0.7286	0.0583	0.0484	0.1577	0.0520	1.0450
Deep Water Development	0.5280	0.0422	0.0351	0.1143	0.0377	0.7574
Deep Water Exploratory	1.1697	0.0936	0.0778	0.2532	0.0836	1.6778

NSPS Option 1 Solids Control Air Emissions (per model well) - Rig Fuel Type for Electricity Generation (Natural Gas)

Model Well	Air Emissions (short tons/model well)					
	NO_x	THC	SO_2	CO	TSP	Total
Shallow Water Development	0.0323	0.0045	0.0000	0.0206	0.0000	0.0574
Shallow Water Exploratory	0.0677	0.0094	0.0001	0.0432	0.0000	0.1203
Deep Water Development	0.0490	0.0068	0.0001	0.0313	0.0000	0.0872
Deep Water Exploratory	0.1086	0.0150	0.0002	0.0693	0.0000	0.1932

NSPS Option 1 Solids Control Air Emissions (per model well) - Weighted by Rig Diesel/Natural Gas Percentage Fuel Split (85%/15%)

Model Well	Air Emissions (short tons/model well)						
	NO_x	THC	SO_2	CO	TSP	Total	Total Per Day
Shallow Water Development	0.3003	0.0243	0.0197	0.0670	0.0211	0.4324	0.0831
Shallow Water Exploratory	0.6294	0.0509	0.0412	0.1405	0.0442	0.9063	0.0831
Deep Water Development	0.4562	0.0369	0.0299	0.1018	0.0321	0.6569	0.0831
Deep Water Exploratory	1.0105	0.0818	0.0661	0.2256	0.0710	1.4551	0.0831

NSPS Non-Water Quality Environmental Impacts: NSPS Option 1

Region: Offshore Gulf of Mexico (GOM)
Technology: SBF Discharges from NSPS Solids Control System (e.g., Cuttings Dryer & Fines Removal Unit) at 4.03% CRN

Daily Drill Rig Emissions

Model Well	Air Emissions (short tons/model well)					
	NO_x	THC	SO_2	CO	TSP	Total
Shallow Water Development	3.1570	1.6954	0.2150	0.4525	0.2475	5.7674
Shallow Water Exploratory	3.1570	1.6954	0.2150	0.4525	0.2475	5.7674
Deep Water Development	3.1570	1.6954	0.2150	0.4525	0.2475	5.7674
Deep Water Exploratory	3.1570	1.6954	0.2150	0.4525	0.2475	5.7674

Note: Drill rig emissions include impacts from all rig daily operations and one helicopter trip to and from the rig.

Daily Drill Rig Fuel Usage

Model Well	gallons per model well	Barrels of Oil Equivalent (BOE) per model well
Shallow Water Development	15,388.0	366.4
Shallow Water Exploratory	15,388.0	366.4
Deep Water Development	15,388.0	366.4
Deep Water Exploratory	15,388.0	366.4
TOTAL	61,552.0	1,465.5

NSPS Option 1 Annual Emissions/Fuel Usage

Model Well	SBF (Discharge @ 4.03%)		OBF (Zero Discharge)		WBF (Discharge @ 10.20%)	
	Total Air Emissions (tons)	Barrels of Oil Equivalent (BOE)	Total Air Emissions (tons)	Barrels of Oil Equivalent (BOE)	Total Air Emissions (tons)	Barrels of Oil Equivalent (BOE)
Shallow Water Development	243.3811	15,526.7	32.2557	2,061.1	1,507.5994	96,150.5
Shallow Water Exploratory	0.0000	0.0	0.0000	0.0	0.0000	0.0
Deep Water Development	739.5042	47,177.3	0.0000	0.0	916.1566	58,429.9
Deep Water Exploratory	0.0000	0.0	0.0000	0.0	0.0000	0.0
TOTAL	**982.9**	**62,704.0**	**32.3**	**2,061.1**	**2,423.8**	**154,580.4**
	3,438.9					
	219,345.5					

Note: Summary annual air emission/fuel usage totals assume the following number of GOM SBF wells (existing sources) under this technology option:
8 SWD wells, 0 SWE wells, 16 DWD wells, and 0 DWE wells

Note: Summary annual air emission/fuel usage totals assume the following number of GOM OBF wells (existing sources) will be subject to zero discharge under this technology option: 1 SWD wells, 0 SWE wells, 0 DWD wells, and 0 DWE wells

Note: Summary annual air emission/fuel usage totals assume the following number of GOM WBF wells (existing sources) under this technology option:
25 SWD wells, 0 SWE wells, 10 DWD wells, and 0 DWE wells

Note: 1 BOE = 42 gallons of diesel

NSPS Non-Water Quality Environmental Impacts: NSPS Option 1

Region: Offshore Gulf of Mexico (GOM)
Technology: SBF Discharges from NSPS Solids Control System (e.g., Cuttings Dryer & Fines Removal Unit) at 4.03% CRN

Annual Air Emissions (SBF NSPS Option 1 Model Well - Discharging at 4.03% CRN)

Model Well	Air Emissions (short tons/model well)					
	NO_x	THC	SO_2	CO	TSP	Total
Shallow Water Development	133.7334	70.7231	9.0996	19.3603	10.4648	243.3811
Shallow Water Exploratory	0.0000	0.0000	0.0000	0.0000	0.0000	0.0000
Deep Water Development	203.1719	107.4447	13.8243	29.4127	15.8985	369.7521
Deep Water Exploratory	0.0000	0.0000	0.0000	0.0000	0.0000	0.0000
Total	**336.9053**	**178.1678**	**22.9239**	**48.7729**	**26.3633**	

Annual Air Emissions (OBF Baseline Model Well - Zero Discharging at 10.20% CRN)

Model Well	Air Emissions (short tons/model well)					
	NOx	THC	SO2	CO	TSP	Total
Shallow Water Development	17.7219	9.3437	1.2082	2.5916	1.3903	32.2557
Shallow Water Exploratory	0.0000	0.0000	0.0000	0.0000	0.0000	0.0000
Deep Water Development	0.0000	0.0000	0.0000	0.0000	0.0000	0.0000
Deep Water Exploratory	0.0000	0.0000	0.0000	0.0000	0.0000	0.0000
Total	**17.7219**	**9.3437**	**1.2082**	**2.5916**	**1.3903**	

Annual Air Emissions (WBF Baseline Model Well - Discharging at 10.20% CRN)

Model Well	Air Emissions (short tons/model well)					
	NO_x	THC	SO_2	CO	TSP	Total
Shallow Water Development	823.6278	441.0313	56.0734	118.2768	64.5473	1,503.5565
Shallow Water Exploratory	0.0000	0.0000	0.0000	0.0000	0.0000	0.0000
Deep Water Development	500.5123	268.0113	34.0754	71.8759	39.2249	913.6997
Deep Water Exploratory	0.0000	0.0000	0.0000	0.0000	0.0000	0.0000
Total	**1,324.1400**	**709.0426**	**90.1487**	**190.1527**	**103.7722**	

Note: Summary annual air emission totals assume the following number of GOM SBF wells (existing sources) under this technology option:
8 SWD wells, 0 SWE wells, 16 DWD wells, and 0 DWE wells

Note: Summary annual air emission totals assume the following number of GOM OBF wells (existing sources) will be subject to zero discharge under this technology option: 1 SWD wells, 0 SWE wells, 0 DWD wells, and 0 DWE wells

Note: Summary annual air emission totals assume the following number of GOM WBF wells (existing sources) under this technology option:
25 SWD wells, 0 SWE wells, 10 DWD wells, and 0 DWE wells

NSPS Non-Water Quality Environmental Impacts: NSPS Option 2

Region: Offshore Gulf of Mexico (GOM)
Technology: SBF Discharge from NSPS Solids Control System (e.g., Cuttings Dryer only at 3.82% CRN) & ZD of fines

Fuel-Consuming Activity	Diesel Fuel Consumed (gal/model well)				Note
	Shallow Water		Deep Water		(All information below is detailed in EPA, 2000 unless otherwise noted.)
	Development	Exploratory	Development	Exploratory	
Cuttings Dryer Discharge					
Baseline Solids Control Equipment	748.8	1,569.6	1,137.6	2,520.0	Baseline equipment fuel usage is 6 gal-diesel/hr
Improved Solids Control Equipment (e.g., Cuttings Dryer)	748.8	1,569.6	1,137.6	2,520.0	Cuttings dryer equipment fuel usage is 6 gal-diesel/hr
Zero Discharge of Fines					
Regular Supply Boat Transit	870.4	870.4	870.4	870.4	EPA assumes that the volume of fines waste can be managed via regular supply boats
Dedicated Supply Boat Transit	0.0	0.0	0.0	0.0	
Total Supply Boat Transit	870.4	870.4	870.4	870.4	
Barge Transit	1.7	3.3	3.3	6.7	
Supply Boat Maneuvering	25.3	25.3	25.3	25.3	
Dedicated Supply Boat Loading	0.0	0.0	0.0	0.0	EPA assumes that the volume of fines waste can be managed via regular supply boats
Regular Supply Boat Loading	45.5	50.6	50.6	60.7	
Supply Boat Auxiliary Generator (in Port Demurrage)	144.0	144.0	144.0	144.0	
Supply Boat Cranes	3.3	6.7	6.7	13.3	
Barge Cranes	1.7	3.3	3.3	6.7	
Trucks	5.0	5.0	5.0	5.0	
Subtotal	2,594.5	4,247.9	3,383.9	6,172.1	

NSPS Non-Water Quality Environmental Impacts: NSPS Option 2

Region: Offshore Gulf of Mexico (GOM)
Technology: SBF Discharge from NSPS Solids Control System (e.g., Cuttings Dryer only at 3.82% CRN) & ZD of fines

Fuel-Consuming Activity	Diesel Fuel Consumed (gal/model well)				Note (All information below is detailed in EPA, 2000 unless otherwise noted.)
	Shallow Water		Deep Water		
	Development	Exploratory	Development	Exploratory	
Zero Discharge of Fines (cont.)					
On-shore Disposal (Landfarming)					
Wheel Tractor for Grading at Landfarm	1.7	1.7	1.7	1.7	
Dozer/Loader for Spreading Waste at Landfarm	44.0	44.0	44.0	44.0	
On-shore Landfarming Subtotal:	45.7	45.7	45.7	45.7	
On-shore Disposal (Injection)					
Cuttings Transfer	0.1	0.2	0.2	0.4	Hours of operation equals the cuttings waste volume divided by cuttings injection rate (bbl/hr). The transfer equipment utilizes one (1) 100 hp vacuum pump.
Cuttings Grinding/Processing	0.1	0.2	0.2	0.4	Hours of operation equals the cuttings waste volume divided by cuttings injection rate (bbl/hr). Total power utilized by the grinding and processing equipment is 120 hp.
Cuttings Injection	0.1	0.2	0.2	0.4	Hours of operation equals the cuttings waste volume divided by cuttings injection rate (bbl/hr).
On-shore Injection Subtotal:	0.3	0.7	0.5	1.2	
On-shore Disposal Subtotal:	9.4	9.7	9.5	10.1	Weighted average using landfarming/on-shore injection percentage split (20%/80%) of offshore wastes sent on-shore
TOTAL Diesel Per Well (Gal)	2,603.9	4,257.6	3,393.4	6,182.2	

NSPS Non-Water Quality Environmental Impacts: NSPS Option 2

Region: Offshore Gulf of Mexico (GOM)

Technology: SBF Discharge from NSPS Solids Control System (e.g., Cuttings Dryer only at 3.82% CRN) & ZD of fines

Energy-Consuming Activity	Energy Requirements (hp-hr/model well)				Note (All information below is detailed in EPA, 2000 unless otherwise noted.)
	Shallow Water		Deep Water		
	Development	Exploratory	Development	Exploratory	
Baseline Solids Control Equipment	8,424.0	17,658.0	12,798.0	28,350.0	Baseline equipment include: 4 x 5 hp primary shale shakers, 4 x 5 hp secondary shale shakers, and 1 x 27.5 hp fines removal unit (avg of 5 hp mud cleaner and 50 hp decanting centrifuge).
Improved Solids Control Equipment (e.g., Cuttings Dryer)	14,098.7	29,553.0	21,419.1	47,447.4	Average of MUD-10 (38.22 hp) and vertical centrifuge (187.72 hp)
Supply Boat Auxiliary Generator (in Port Demurrage)	1,440.0	1,440.0	1,440.0	1,440.0	
Supply Boat Cranes	54.4	108.8	108.8	217.6	
Barge Cranes	27.2	54.4	54.4	108.8	
On-shore Disposal (Injection)					
Cuttings Transfer	1.9	4.0	2.9	6.4	EPA assumes that all onshore cuttings injection facility equipment use diesel (Fall 1999 Field Trip)
Cuttings Grinding/Proc.	2.3	2.3	2.3	2.3	
Cuttings Injection	23.4	23.4	23.4	23.4	
Total Power Requirements (per well) for Seven Selected Energy-Consuming Activities (hp):	24,071.8	48,843.8	35,848.8	77,595.9	These seven energy-consuming activities were selected for inclusion in this table as their air emission factors are given in terms of mass/power-time (g/bhp-hr).

NSPS Non-Water Quality Environmental Impacts: NSPS Option 2

Region: Offshore Gulf of Mexico (GOM)
Technology: SBF Discharge from NSPS Solids Control System (e.g., Cuttings Dryer only at 3.82% CRN) & ZD of fines

Shallow Water Development (SWD) Well Air Emissions

Air Emission Activity	Air Emissions (short tons/model well)					
	NO_x	THC	SO_2	CO	TSP	Total
Baseline and Cuttings Dryer Solids Control Equipment						
Diesel Fuel Source	0.3476	0.0278	0.0231	0.0752	0.0248	0.4985
Natural Gas Fuel Source	0.0323	0.0045	0.0000	0.0206	0.0000	0.0574
Solids Control Subtotal	0.3003	0.0243	0.0197	0.0670	0.0211	0.4324
Supply Boats						
Transit	0.1705	0.0731	0.0124	0.0341	0.0144	0.3044
Maneuvering	0.0053	0.0029	0.0004	0.0008	0.0004	0.0097
Loading	0.0096	0.0051	0.0006	0.0014	0.0008	0.0175
Demurrage	0.0222	0.0018	0.0015	0.0048	0.0016	0.0319
Cranes	0.0008	0.0001	0.0001	0.0002	0.0001	0.0012
Barge						
Transit	0.0003	0.0001	0.0000	0.0001	0.0000	0.0006
Cranes	0.0004	0.0000	0.0000	0.0001	0.0000	0.0006
Trucks	0.0002	0.0001	0.0000	0.0002	0.0000	0.0005
On-shore Disposal (Landfarming)						
Wheel Tractor	0.0006	0.0001	0.0000	0.0018	0.0001	0.0026
Dozer/Loader	0.0008	0.0001	0.0001	0.0002	0.0001	0.0013
On-shore Disposal (Injection)						
Cuttings Transfer	0.0000	0.0000	0.0000	0.0000	0.0000	0.0000
Cuttings Grinding/Proc.	0.0000	0.0000	0.0000	0.0000	0.0000	0.0001
Cuttings Injection	0.0004	0.0000	0.0000	0.0001	0.0000	0.0005
Onshore Diposal Subtotal	0.0006	0.0001	0.0000	0.0005	0.0000	0.0013
Total Per Well	0.5103	0.1076	0.0347	0.1090	0.0384	0.8000

Note: On-shore Injection air emissions assume that diesel engines are use for electricity generation

NSPS Non-Water Quality Environmental Impacts: NSPS Option 2

Region: Offshore Gulf of Mexico (GOM)
Technology: SBF Discharge from NSPS Solids Control System (e.g., Cuttings Dryer only at 3.82% CRN) & ZD of fines

Shallow Water Exploratory (SWE) Well Air Emissions

Air Emission Activity	Air Emissions (short tons/model well)					
	NO_x	THC	SO_2	CO	TSP	Total
Baseline and Cuttings Dryer						
Solids Control Equipment						
Diesel Fuel Source	0.7286	0.0583	0.0484	0.1577	0.0520	1.0450
Natural Gas Fuel Source	0.0677	0.0094	0.0001	0.0432	0.0000	0.1203
Solids Control Subtotal	0.6294	0.0509	0.0412	0.1405	0.0442	0.9063
Supply Boats						
Transit	0.1705	0.0731	0.0124	0.0341	0.0144	0.3044
Maneuvering	0.0053	0.0029	0.0004	0.0008	0.0004	0.0097
Loading	0.0106	0.0057	0.0007	0.0015	0.0008	0.0194
Demurrage	0.0222	0.0018	0.0015	0.0048	0.0016	0.0319
Cranes	0.0017	0.0001	0.0001	0.0004	0.0001	0.0024
Barge						
Transit	0.0007	0.0003	0.0000	0.0001	0.0001	0.0012
Cranes	0.0008	0.0001	0.0001	0.0002	0.0001	0.0012
Trucks	0.0002	0.0001	0.0000	0.0002	0.0000	0.0005
On-shore Disposal (Landfarming)						
Wheel Tractor	0.0006	0.0001	0.0000	0.0018	0.0001	0.0026
Dozer/Loader	0.0008	0.0001	0.0001	0.0002	0.0001	0.0013
On-shore Disposal (Injection)						
Cuttings Transfer	0.0001	0.0000	0.0000	0.0000	0.0000	0.0001
Cuttings Grinding/Proc.	0.0000	0.0000	0.0000	0.0000	0.0000	0.0001
Cuttings Injection	0.0004	0.0000	0.0000	0.0001	0.0000	0.0005
Onshore Diposal Subtotal	0.0007	0.0001	0.0000	0.0005	0.0001	0.0013
Total Per Well	0.8421	0.1350	0.0564	0.1830	0.0617	1.2783

Note: On-shore Injection air emissions assume that diesel engines are use for electricity generation

NSPS Non-Water Quality Environmental Impacts: NSPS Option 2

Region: Offshore Gulf of Mexico (GOM)
Technology: SBF Discharge from NSPS Solids Control System (e.g., Cuttings Dryer only at 3.82% CRN) & ZD of fines

Deep Water Development (DWD) Well Air Emissions

Air Emission Activity	Air Emissions (short tons/model well)					
	NO_x	THC	SO_2	CO	TSP	Total
Baseline and Cuttings Dryer						
Solids Control Equipment						
Diesel Fuel Source	0.5280	0.0422	0.0351	0.1143	0.0377	0.7574
Natural Gas Fuel Source	0.0490	0.0068	0.0001	0.0313	0.0000	0.0872
Solids Control Subtotal	0.4562	0.0369	0.0299	0.1018	0.0321	0.6569
Supply Boats						
Transit	0.1705	0.0731	0.0124	0.0341	0.0144	0.3044
Maneuvering	0.0053	0.0029	0.0004	0.0008	0.0004	0.0097
Loading	0.0106	0.0057	0.0007	0.0015	0.0008	0.0194
Demurrage	0.0222	0.0018	0.0015	0.0048	0.0016	0.0319
Cranes	0.0017	0.0001	0.0001	0.0004	0.0001	0.0024
Barge						
Transit	0.0007	0.0003	0.0000	0.0001	0.0001	0.0012
Cranes	0.0008	0.0001	0.0001	0.0002	0.0001	0.0012
Trucks	0.0002	0.0001	0.0000	0.0002	0.0000	0.0005
On-shore Disposal (Landfarming)						
Wheel Tractor	0.0006	0.0001	0.0000	0.0018	0.0001	0.0026
Dozer/Loader	0.0008	0.0001	0.0001	0.0002	0.0001	0.0013
On-shore Disposal (Injection)						
Cuttings Transfer	0.0000	0.0000	0.0000	0.0000	0.0000	0.0001
Cuttings Grinding/Proc.	0.0000	0.0000	0.0000	0.0000	0.0000	0.0001
Cuttings Injection	0.0004	0.0000	0.0000	0.0001	0.0000	0.0005
Onshore Diposal Subtotal	0.0006	0.0001	0.0000	0.0005	0.0001	0.0013
Total Per Well	0.6689	0.1210	0.0451	0.1443	0.0495	1.0288

Note: On-shore Injection air emissions assume that diesel engines are use for electricity generation

NSPS Non-Water Quality Environmental Impacts: NSPS Option 2

Region: Offshore Gulf of Mexico (GOM)
Technology: SBF Discharge from NSPS Solids Control System (e.g., Cuttings Dryer only at 3.82% CRN) & ZD of fines

Deep Water Exploratory (DWE) Well Air Emissions

Air Emission Activity	Air Emissions (short tons/model well)					
	NO_x	THC	SO_2	CO	TSP	Total
Baseline and Cuttings Dryer						
Solids Control Equipment						
Diesel Fuel Source	1.1697	0.0936	0.0778	0.2532	0.0836	1.6778
Natural Gas Fuel Source	0.1086	0.0150	0.0002	0.0693	0.0000	0.1932
Solids Control Subtotal	1.0105	0.0818	0.0661	0.2256	0.0710	1.4551
Supply Boats						
Transit	0.1705	0.0731	0.0124	0.0341	0.0144	0.3044
Maneuvering	0.0053	0.0029	0.0004	0.0008	0.0004	0.0097
Loading	0.0127	0.0069	0.0009	0.0018	0.0010	0.0233
Demurrage	0.0222	0.0018	0.0015	0.0048	0.0016	0.0319
Cranes	0.0034	0.0003	0.0002	0.0007	0.0002	0.0048
Barge						
Transit	0.0013	0.0006	0.0001	0.0003	0.0001	0.0023
Cranes	0.0017	0.0001	0.0001	0.0004	0.0001	0.0024
Trucks	0.0002	0.0001	0.0000	0.0002	0.0000	0.0005
On-shore Disposal (Landfarming)						
Wheel Tractor	0.0006	0.0001	0.0000	0.0018	0.0001	0.0026
Dozer/Loader	0.0008	0.0001	0.0001	0.0002	0.0001	0.0013
On-shore Disposal (Injection)						
Cuttings Transfer	0.0001	0.0000	0.0000	0.0000	0.0000	0.0001
Cuttings Grinding/Proc.	0.0000	0.0000	0.0000	0.0000	0.0000	0.0001
Cuttings Injection	0.0004	0.0000	0.0000	0.0001	0.0000	0.0005
Onshore Diposal Subtotal	0.0007	0.0001	0.0001	0.0005	0.0001	0.0013
Total Per Well	1.2286	0.1675	0.0817	0.2691	0.0889	1.8358

Note: On-shore Injection air emissions assume that diesel engines are use for electricity generation

NSPS Non-Water Quality Environmental Impacts: NSPS Option 2

Region: Offshore Gulf of Mexico (GOM)
Technology: SBF Discharge from NSPS Solids Control System (e.g., Cuttings Dryer only at 3.82% CRN) & ZD of fines

Summary Air Emissions (per model well)

Model Well	Air Emissions (short tons/model well)						
	NO_x	THC	SO_2	CO	TSP	Total	Total Per Day
Shallow Water Development	0.5103	0.1076	0.0347	0.1090	0.0384	0.8000	0.1538
Shallow Water Exploratory	0.8421	0.1350	0.0564	0.1830	0.0617	1.2783	0.1173
Deep Water Development	0.6689	0.1210	0.0451	0.1443	0.0495	1.0288	0.1302
Deep Water Exploratory	1.2286	0.1675	0.0817	0.2691	0.0889	1.8358	0.1049

Summary Fuel Usage (per model well)

Model Well		Fuel Usage Per Model Well	
		Gallons	Barrels of Oil Equivalent (BOE)
Shallow Water Development		2,603.9	62.0
Shallow Water Exploratory		4,257.6	101.4
Deep Water Development		3,393.4	80.8
Deep Water Exploratory		6,182.2	147.2

Note: 1 BOE = 42 gallons of diesel

NSPS Non-Water Quality Environmental Impacts: NSPS Option 2

Region: Offshore Gulf of Mexico (GOM)
Technology: SBF Discharge from NSPS Solids Control System (e.g., Cuttings Dryer only at 3.82% CRN) & ZD of fines

Daily Drill Rig Emissions

Model Well	Air Emissions (short tons/model well)					
	NO_x	THC	SO_2	CO	TSP	Total
Shallow Water Development	3.1570	1.6954	0.2150	0.4525	0.2475	5.7674
Shallow Water Exploratory	3.1570	1.6954	0.2150	0.4525	0.2475	5.7674
Deep Water Development	3.1570	1.6954	0.2150	0.4525	0.2475	5.7674
Deep Water Exploratory	3.1570	1.6954	0.2150	0.4525	0.2475	5.7674

Note: Drill rig emissions include impacts from all rig daily operations and one helicopter trip to and from the rig.

Daily Drill Rig Fuel Usage

Model Well	gallons per model well	Barrels of Oil Equivalent (BOE) per model well
Shallow Water Development	15,388.0	366.4
Shallow Water Exploratory	15,388.0	366.4
Deep Water Development	15,388.0	366.4
Deep Water Exploratory	15,388.0	366.4
TOTAL	61,552.0	1,465.5

NSPS Option 2 Annual Emissions/Fuel Usage

Model Well	SBF (Discharge @ 3.82%)		OBF (Zero Discharge)		WBF (Discharge @ 10.20%)	
	Total Air Emissions (tons)	Barrels of Oil Equivalent (BOE)	Total Air Emissions (tons)	Barrels of Oil Equivalent (BOE)	Total Air Emissions (tons)	Barrels of Oil Equivalent (BOE)
Shallow Water Development	246.3220	15,737.4	32.2557	2,061.1	1,507.5994	96,150.5
Shallow Water Exploratory	0.0000	0.0	0.0000	0.0	0.0000	0.0
Deep Water Development	745.4555	47,603.3	0.0000	0.0	916.1566	58,429.9
Deep Water Exploratory	0.0000	0.0	0.0000	0.0	0.0000	0.0
TOTAL	**991.8**	**63,340.7**	**32.3**	**2,061.1**	**2,423.8**	**154,580.4**
	3,447.8					
	219,982.2					

Note: Summary annual air emission/fuel usage totals assume the following number of GOM SBF wells (existing sources) under this technology option: 8 SWD wells, 0 SWE wells, 16 DWD wells, and 0 DWE wells

Note: Summary annual air emission/fuel usage totals assume the following number of GOM OBF wells (existing sources) will be subject to zero discharge under this technology option: 1 SWD wells, 0 SWE wells, 0 DWD wells, and 0 DWE wells

Note: Summary annual air emission/fuel usage totals assume the following number of GOM WBF wells (existing sources) under this technology option: 25 SWD wells, 0 SWE wells, 10 DWD wells, and 0 DWE wells

Note: 1 BOE = 42 gallons of diesel

NSPS Non-Water Quality Environmental Impacts: NSPS Option 2

Region: Offshore Gulf of Mexico (GOM)
Technology: SBF Discharge from NSPS Solids Control System (e.g., Cuttings Dryer only at 3.82% CRN) & ZD of fines

Annual Air Emissions (SBF NSPS Option 2 Model Well - Discharging at 3.82% CRN

Model Well	Air Emissions (short tons/model well)					
	NO_x	THC	SO_2	CO	TSP	Total
Shallow Water Development	135.4136	71.3892	9.2199	19.6963	10.6031	246.3220
Shallow Water Exploratory	0.0000	0.0000	0.0000	0.0000	0.0000	0.0000
Deep Water Development	409.7468	216.2345	27.8921	59.5053	32.0767	745.4555
Deep Water Exploratory	0.0000	0.0000	0.0000	0.0000	0.0000	0.0000
Total	**545.1604**	**287.6237**	**37.1120**	**79.2016**	**42.6799**	

Annual Air Emissions (OBF Baseline Model Well - Zero Discharging at 10.20%CRN)

Model Well	Air Emissions (short tons/model well)					
	NOx	THC	SO2	CO	TSP	Total
Shallow Water Development	17.7219	9.3437	1.2082	2.5916	1.3903	32.2557
Shallow Water Exploratory	0.0000	0.0000	0.0000	0.0000	0.0000	0.0000
Deep Water Development	0.0000	0.0000	0.0000	0.0000	0.0000	0.0000
Deep Water Exploratory	0.0000	0.0000	0.0000	0.0000	0.0000	0.0000
Total	**17.7219**	**9.3437**	**1.2082**	**2.5916**	**1.3903**	

Annual Air Emissions (WBF Baseline Model Well - Discharging at 10.20% CRN)

Model Well	Air Emissions (short tons/model well)					
	NO_x	THC	SO_2	CO	TSP	Total
Shallow Water Development	823.6278	441.0313	56.0734	118.2768	64.5473	1,503.5565
Shallow Water Exploratory	0.0000	0.0000	0.0000	0.0000	0.0000	0.0000
Deep Water Development	500.5123	268.0113	34.0754	71.8759	39.2249	913.6997
Deep Water Exploratory	0.0000	0.0000	0.0000	0.0000	0.0000	0.0000
Total	**1,324.1400**	**709.0426**	**90.1487**	**190.1527**	**103.7722**	

Note: Summary annual air emission totals assume the following number of GOM SBF wells (existing sources) under this technology option:
8 SWD wells, 0 SWE wells, 16 DWD wells, and 0 DWE wells

Note: Summary annual air emission totals assume the following number of GOM OBF wells (existing sources) will be subject to zero discharge under this technology option: 1 SWD wells, 0 SWE wells, 0 DWD wells, and 0 DWE wells

Note: Summary annual air emission totals assume the following number of GOM WBF wells (existing sources) under this technology option:
25 SWD wells, 0 SWE wells, 10 DWD wells, and 0 DWE wells

NSPS Non-Water Quality Environmental Impacts: GOM Zero Discharge

Region: Offshore Gulf of Mexico (GOM)
Technology: Zero Discharge via Haul and Land Disposal @ 10.20% CRN

Fuel-Consuming Activity	Diesel Fuel Consumed (gal/model well)				Note
	Shallow Water		Deep Water		(All information below is detailed in EPA, 2000 unless otherwise noted.)
	Development	Exploratory	Development	Exploratory	
Baseline Solids Control Equipment	748.8	1,569.6	1,137.6	2,520.0	Baseline equipment include: 4 x 5 hp primary shale shakers, 4 x 5 hp secondary shale shakers, and 1 x 27.5 hp fines removal unit (avg of 5 hp mud cleaner and 50 hp decanting centrifuge).
Regular Supply Boat Transit	0.0	870.4	0.0	870.4	
Dedicated Supply Boat Transit	3,131.3	3,131.3	3,131.3	6,262.6	
Total Supply Boat Transit	3,131.3	4,001.7	3,131.3	7,133.0	
Barge Transit	61.7	128.3	93.3	206.7	
Supply Boat Maneuvering	25.3	50.6	25.3	75.9	
Dedicated Supply Boat Loading	3,197.9	6,532.5	4,837.4	10,580.5	Dedicated supply boats are assumed to be moored and idling at the platform until it has reached capacity or until all SBF generated cuttings from the drilling operation are loaded.
Regular Supply Boat Loading	0.0	101.2	0.0	101.2	
Supply Boat Auxiliary Generator (in Port Demurrage)	144.0	288.0	144.0	432.0	
Supply Boat Cranes	123.3	256.6	186.6	413.2	
Barge Cranes	61.6	128.3	93.3	206.6	
Trucks	40.0	85.0	60.0	130.0	
Subtotal	7,533.9	13,141.8	9,708.8	21,799.0	

NSPS Non-Water Quality Environmental Impacts: GOM Zero Discharge

Region: Offshore Gulf of Mexico (GOM)
Technology: Zero Discharge via Haul and Land Disposal @ 10.20% CRN

Fuel-Consuming Activity	Diesel Fuel Consumed (gal/model well)				Note (All information below is detailed in EPA, 2000 unless otherwise noted.)
	Shallow Water		Deep Water		
	Development	Exploratory	Development	Exploratory	
On-shore Disposal (Landfarming)					
Wheel Tractor for Grading at Landfarm	13.4	13.4	13.4	13.4	
Dozer/Loader for Spreading Waste at Landfarm	352.0	352.0	352.0	352.0	
On-shore Landfarming Subtotal:	365.4	365.4	365.4	365.4	
On-shore Disposal (Injection)					
Cuttings Transfer	4.4	9.2	6.7	14.8	Hours of operation equals the cuttings waste volume divided by cuttings injection rate (bbl/hr). The transfer equipment utilizes one (1) 100 hp vacuum pump.
Cuttings Grinding/Processing	4.4	9.2	6.7	14.8	Hours of operation equals the cuttings waste volume divided by cuttings injection rate (bbl/hr). Total power utilized by the grinding and processing equipment is 120 hp.
Cuttings Injection	4.4	9.2	6.7	14.8	Hours of operation equals the cuttings waste volume divided by cuttings injection rate (bbl/hr).
On-shore Injection Subtotal:	13.2	27.7	20.0	44.5	
On-shore Disposal Subtotal:	83.6	95.2	89.1	108.7	Weighted average using landfarming/on-shore injection percentage split (20%/80%) of offshore wastes sent on-shore
TOTAL Diesel Per Well (Gal)	7,617.6	13,237.0	9,797.9	21,907.7	

NSPS Non-Water Quality Environmental Impacts: GOM Zero Discharge

Region: Offshore Gulf of Mexico (GOM)
Technology: Zero Discharge via Haul and Land Disposal @ 10.20% CRN

Energy-Consuming Activity	Energy Requirements (hp-hr/model well)				Note (All information below is detailed in EPA, 2000 unless otherwise noted.)
	Shallow Water		Deep Water		
	Development	Exploratory	Development	Exploratory	
Baseline Solids Control Equipment	8,424.0	17,658.0	12,798.0	28,350.0	Baseline equipment include: 4 x 5 hp primary shale shakers, 4 x 5 hp secondary shale shakers, and 1 x 27.5 hp fines removal unit (avg of 5 hp mud cleaner and 50 hp decanting centrifuge).
Supply Boat Auxiliary Generator (in Port Demurrage)	1,440.0	2,880.0	1,440.0	4,320.0	
Supply Boat Cranes	2,012.8	4,188.8	3,046.4	6,745.6	
Barge Cranes	1,006.4	2,094.4	1,523.2	3,372.8	
On-shore Disposal (Injection)					
Cuttings Transfer	73.5	153.9	111.2	247.2	EPA assumes that all onshore cuttings injection facility equipment use diesel (Fall 1999 Field Trip)
Cuttings Grinding/Proc.	88.1	184.7	133.4	296.6	
Cuttings Injection	899.9	1,885.7	1,361.7	3,027.7	
Total Power Requirements (per well) for Seven Selected Energy-Consuming Activities (hp):	13,944.7	29,045.6	20,413.9	46,359.8	These seven energy-consuming activities were selected for inclusion in this table as their air emission factors are given in terms of mass/power-time (g/bhp-hr).

NSPS Non-Water Quality Environmental Impacts: GOM Zero Discharge

Region: Offshore Gulf of Mexico (GOM)
Technology: Zero Discharge via Haul and Land Disposal @ 10.20% CRN

Shallow Water Development (SWD) Well Air Emissions

Air Emission Activity	Air Emissions (short tons/model well)					
	NO_x	THC	SO_2	CO	TSP	Total
Baseline Solids Control Equipment						
Diesel Fuel Source	0.1300	0.0104	0.0086	0.0281	0.0093	0.1865
Natural Gas Fuel Source	0.0121	0.0017	0.0000	0.0077	0.0000	0.0215
Baseline Solids Control Subtotal	0.1123	0.0091	0.0074	0.0251	0.0079	0.1617
Supply Boats						
Transit	0.6133	0.2630	0.0446	0.1226	0.0517	1.0951
Maneuvering	0.0053	0.0029	0.0004	0.0008	0.0004	0.0097
Loading	0.6709	0.3614	0.0455	0.0956	0.0528	1.2262
Demurrage	0.0222	0.0018	0.0015	0.0048	0.0016	0.0319
Cranes	0.0311	0.0025	0.0021	0.0067	0.0022	0.0446
Barge						
Transit	0.0121	0.0052	0.0009	0.0024	0.0010	0.0216
Cranes	0.0155	0.0012	0.0010	0.0034	0.0011	0.0223
Trucks	0.0020	0.0004	0.0000	0.0015	0.0000	0.0039
On-shore Disposal (Landfarming)						
Wheel Tractor	0.0051	0.0008	0.0004	0.0144	0.0005	0.0211
Dozer/Loader	0.0066	0.0008	0.0006	0.0016	0.0005	0.0101
On-shore Disposal (Injection)						
Cuttings Transfer	0.0011	0.0001	0.0001	0.0002	0.0001	0.0016
Cuttings Grinding/Proc.	0.0014	0.0001	0.0001	0.0003	0.0001	0.0020
Cuttings Injection	0.0139	0.0011	0.0009	0.0030	0.0010	0.0199
Onshore Diposal Subtotal	0.0154	0.0014	0.0011	0.0060	0.0011	0.0250
Total Per Well	1.5001	0.6488	0.1044	0.2689	0.1198	2.6420

Note: On-shore Injection air emissions assume that diesel engines are use for electricity generation

NSPS Non-Water Quality Environmental Impacts: GOM Zero Discharge

Region: Offshore Gulf of Mexico (GOM)
Technology: Zero Discharge via Haul and Land Disposal @ 10.20% CRN

Shallow Water Exploratory (SWE) Well Air Emissions

Air Emission Activity	Air Emissions (short tons/model well)					
	NO_x	THC	SO_2	CO	TSP	Total
Baseline Solids Control Equipment						
Diesel Fuel Source	0.2725	0.0218	0.0181	0.0590	0.0195	0.3909
Natural Gas Fuel Source	0.0253	0.0035	0.0000	0.0162	0.0000	0.0450
Baseline Solids Control Subtotal	0.2354	0.0191	0.0154	0.0526	0.0165	0.3390
Supply Boats						
Transit	0.7837	0.3361	0.0570	0.1567	0.0660	1.3996
Maneuvering	0.0106	0.0057	0.0007	0.0015	0.0008	0.0194
Loading	1.3917	0.7496	0.0945	0.1983	0.1095	2.5436
Demurrage	0.0444	0.0036	0.0030	0.0096	0.0032	0.0637
Cranes	0.0646	0.0052	0.0043	0.0140	0.0046	0.0927
Barge						
Transit	0.0251	0.0108	0.0018	0.0050	0.0021	0.0449
Cranes	0.0323	0.0026	0.0021	0.0070	0.0023	0.0464
Trucks	0.0042	0.0009	0.0000	0.0032	0.0000	0.0083
On-shore Disposal (Landfarming)						
Wheel Tractor	0.0051	0.0008	0.0004	0.0144	0.0005	0.0211
Dozer/Loader	0.0066	0.0008	0.0006	0.0016	0.0005	0.0101
On-shore Disposal (Injection)						
Cuttings Transfer	0.0024	0.0002	0.0002	0.0005	0.0002	0.0034
Cuttings Grinding/Proc.	0.0029	0.0002	0.0002	0.0006	0.0002	0.0041
Cuttings Injection	0.0291	0.0023	0.0019	0.0063	0.0021	0.0417
Onshore Diposal Subtotal	0.0298	0.0025	0.0020	0.0091	0.0022	0.0456
Total Per Well	2.6221	1.1361	0.1808	0.4570	0.2072	4.6032

Note: On-shore Injection air emissions assume that diesel engines are use for electricity generation

NSPS Non-Water Quality Environmental Impacts: GOM Zero Discharge

Region: Offshore Gulf of Mexico (GOM)
Technology: Zero Discharge via Haul and Land Disposal @ 10.20% CRN

Deep Water Development (DWD) Well Air Emissions

Air Emission Activity	Air Emissions (short tons/model well)					
	NO_x	THC	SO_2	CO	TSP	Total
Baseline Solids Control Equipment						
Diesel Fuel Source	0.1975	0.0158	0.0131	0.0427	0.0141	0.2833
Natural Gas Fuel Source	0.0183	0.0025	0.0000	0.0117	0.0000	0.0326
Baseline Solids Control Subtotal	0.1706	0.0138	0.0112	0.0381	0.0120	0.2457
Supply Boats						
Transit	0.6133	0.2630	0.0446	0.1226	0.0517	1.0951
Maneuvering	0.0053	0.0029	0.0004	0.0008	0.0004	0.0097
Loading	1.0149	0.5466	0.0689	0.1446	0.0798	1.8548
Demurrage	0.0222	0.0018	0.0015	0.0048	0.0016	0.0319
Cranes	0.0470	0.0038	0.0031	0.0102	0.0034	0.0674
Barge						
Transit	0.0183	0.0078	0.0013	0.0037	0.0015	0.0326
Cranes	0.0235	0.0019	0.0016	0.0051	0.0017	0.0337
Trucks	0.0030	0.0007	0.0000	0.0023	0.0000	0.0059
On-shore Disposal (Landfarming)						
Wheel Tractor	0.0051	0.0008	0.0004	0.0144	0.0005	0.0211
Dozer/Loader	0.0066	0.0008	0.0006	0.0016	0.0005	0.0101
On-shore Disposal (Injection)						
Cuttings Transfer	0.0017	0.0001	0.0001	0.0004	0.0001	0.0025
Cuttings Grinding/Proc.	0.0021	0.0002	0.0001	0.0004	0.0001	0.0030
Cuttings Injection	0.0210	0.0017	0.0014	0.0045	0.0015	0.0301
Onshore Diposal Subtotal	0.0222	0.0019	0.0015	0.0075	0.0016	0.0347
Total Per Well	1.9402	0.8441	0.1340	0.3395	0.1537	3.4116

Note: On-shore Injection air emissions assume that diesel engines are use for electricity generation

NSPS Non-Water Quality Environmental Impacts: GOM Zero Discharge

Region: Offshore Gulf of Mexico (GOM)
Technology: Zero Discharge via Haul and Land Disposal @ 10.20% CRN

Deep Water Exploratory (DWE) Well Air Emissions

Air Emission Activity	Air Emissions (short tons/model well)					
	NO_x	THC	SO_2	CO	TSP	Total
Baseline Solids Control Equipment						
Diesel Fuel Source	0.4375	0.0350	0.0291	0.0947	0.0313	0.6275
Natural Gas Fuel Source	0.0406	0.0056	0.0001	0.0259	0.0000	0.0723
Baseline Solids Control Subtotal	0.3780	0.0306	0.0247	0.0844	0.0266	0.5442
Supply Boats						
Transit	1.3970	0.5992	0.1016	0.2793	0.1177	2.4947
Maneuvering	0.0159	0.0086	0.0011	0.0023	0.0013	0.0291
Loading	2.2410	1.2070	0.1521	0.3194	0.1762	4.0958
Demurrage	0.0667	0.0053	0.0044	0.0144	0.0048	0.0956
Cranes	0.1041	0.0083	0.0069	0.0225	0.0074	0.1493
Barge						
Transit	0.0405	0.0174	0.0029	0.0081	0.0034	0.0723
Cranes	0.0520	0.0042	0.0035	0.0113	0.0037	0.0747
Trucks	0.0064	0.0014	0.0000	0.0049	0.0000	0.0128
On-shore Disposal (Landfarming)						
Wheel Tractor	0.0051	0.0008	0.0004	0.0144	0.0005	0.0211
Dozer/Loader	0.0066	0.0008	0.0006	0.0016	0.0005	0.0101
On-shore Disposal (Injection)						
Cuttings Transfer	0.0038	0.0003	0.0003	0.0008	0.0003	0.0055
Cuttings Grinding/Proc.	0.0046	0.0004	0.0003	0.0010	0.0003	0.0066
Cuttings Injection	0.0467	0.0037	0.0031	0.0101	0.0033	0.0670
Onshore Diposal Subtotal	0.0464	0.0038	0.0031	0.0127	0.0034	0.0695
Total Per Well	4.3481	1.8858	0.3004	0.7592	0.3444	7.6379

Note: On-shore Injection air emissions assume that diesel engines are use for electricity generation

NSPS Non-Water Quality Environmental Impacts: GOM Zero Discharge

Region: Offshore Gulf of Mexico (GOM)
Technology: Zero Discharge via Offshore/On-Site Cuttings Injection @ 10.20% CRN

On-site Injection Diesel Fuel Requirements

Fuel-Consuming Activity	Diesel Fuel Consumed (gal/model well)				Note (All information below is detailed in EPA, 2000 unless otherwise noted.)
	Shallow Water		Deep Water		
	Development	Exploratory	Development	Exploratory	
Baseline Solids Control Equipment	748.8	1,569.6	1,137.6	2,520.0	Baseline equipment include: 4 x 5 hp primary shale shakers, 4 x 5 hp secondary shale shakers, and 1 x 27.5 hp fines removal unit (avg of 5 hp mud cleaner and 50 hp decanting centrifuge).
Offshore Injection Disposal					
Cuttings Transfer	748.8	1,569.6	1,137.6	2,520.0	Hours of operation equals the drilling length in days (x 24 hr/day). The transfer equipment utilizes one (1) 100 hp vacuum pump.
Cuttings Grinding/Proc.	748.8	1,569.6	1,137.6	2,520.0	Hours of operation equals the drilling length in days (x 24 hr/day). Total power utilized by the grinding and processing equipment is 120 hp.
Cuttings Injection	36.7	76.8	55.5	123.4	Hours of operation equals the cuttings waste volume divided by cuttings injection rate (bbl/hr).Total power utilized by the grinding and processing equipment is 600 hp.
TOTAL Diesel Per Well (Gal)	2,283.1	4,785.6	3,468.3	7,683.4	

On-site Injection Energy Requirements

Energy-Consuming Activity	Energy Requirements (hp-hr/model well)				Note (All information below is detailed in EPA, 2000 unless otherwise noted.)
	Shallow Water		Deep Water		
	Development	Exploratory	Development	Exploratory	
Baseline Solids Control Equipment	8,424.0	17,658.0	12,798.0	28,350.0	
Offshore Injection Disposal					
Cuttings Transfer	12,480.0	26,160.0	18,960.0	42,000.0	
Cuttings Grinding/Proc.	14,976.0	31,392.0	22,752.0	50,400.0	
Cuttings Pump Injection	3,667.0	7,684.5	5,549.2	12,338.1	
Total Power Requirements (per well) for Four Activities (hp):	39,547.0	82,894.5	60,059.2	133,088.1	These four energy-consuming activities were selected for inclusion in this table as their air emission factors are given in terms of mass/power-time (g/bhp-hr).

NSPS Non-Water Quality Environmental Impacts: GOM Zero Discharge

Region: Offshore Gulf of Mexico (GOM)
Technology: Zero Discharge via Offshore/On-Site Cuttings Injection @ 10.20% CRN

On-site Injection Air Emissions (per well) - Rig Fuel Type for Electricity Generation (Diesel)

Model Well	Air Emissions (short tons/model well)					
	NO_x	THC	SO_2	CO	TSP	Total
Shallow Water Development	0.6103	0.0488	0.0406	0.1321	0.0436	0.8754
Shallow Water Exploratory	1.2792	0.1023	0.0851	0.2769	0.0914	1.8349
Deep Water Development	0.9268	0.0741	0.0616	0.2006	0.0662	1.3294
Deep Water Exploratory	2.0538	0.1643	0.1366	0.4445	0.1467	2.9459

On-site Injection Air Emissions (per well) - Rig Fuel Type for Electricity Generation (Natural Gas)

Model Well	Air Emissions (short tons/model well)					
	NO_x	THC	SO_2	CO	TSP	Total
Shallow Water Development	0.0567	0.0078	0.0001	0.0362	0.0000	0.1008
Shallow Water Exploratory	0.1188	0.0164	0.0002	0.0758	0.0000	0.2113
Deep Water Development	0.0861	0.0119	0.0001	0.0549	0.0000	0.1531
Deep Water Exploratory	0.1907	0.0264	0.0003	0.1218	0.0000	0.3392

Average On-site Injection Air Emissions (per well) - Weighted by Rig Diesel/Natural Gas Percentage Fuel Split (85%/15%) for Electricity Generation

Model Well	Air Emissions (short tons/model well)					
	NO_x	THC	SO_2	CO	TSP	Total
Shallow Water Development	0.5273	0.0427	0.0345	0.1177	0.0371	0.7592
Shallow Water Exploratory	1.1052	0.0895	0.0723	0.2467	0.0777	1.5913
Deep Water Development	0.8007	0.0648	0.0524	0.1787	0.0563	1.1530
Deep Water Exploratory	1.7744	0.1436	0.1161	0.3961	0.1247	2.5549

NSPS Non-Water Quality Environmental Impacts: GOM Zero Discharge

Region: Offshore Gulf of Mexico (GOM)
Technology: Zero Discharge (via Haul and Land Disposal & Offshore/On-Site Cuttings Injection) @ 10.20% CRN

Summary Air Emissions (per well) - Weighted by Land Disposal/On-site Injection Percentage Split

Model Well	Air Emissions (short tons/model well)						
	NO_x	THC	SO_2	CO	TSP	Total	Total Per Day
Shallow Water Development	1.3055	0.5276	0.0904	0.2386	0.1033	2.2654	0.4357
Shallow Water Exploratory	2.3187	0.9267	0.1591	0.4150	0.1813	4.0009	0.3671
Deep Water Development	1.9402	0.8441	0.1340	0.3395	0.1537	3.4116	0.4318
Deep Water Exploratory	4.3481	1.8858	0.3004	0.7592	0.3444	7.6379	0.4365

Note: Weighted summary air emissions totals assume the land disposal/on-site injection percentage splits are (80%/20%), (80%/20%), (100%/0%), and (100%/0%) for SWD, SWE, DWD, and DWE model wells respectively.

Summary Fuel Usage (per well) - Weighted by Land Disposal/On-site Injection Percentage Split

Model Well		Fuel Usage Per Model Well	
		Gallons	Barrels of Oil Equivalent (BOE)
Shallow Water Development		6,550.7	156.0
Shallow Water Exploratory		11,546.7	274.9
Deep Water Development		9,797.9	233.3
Deep Water Exploratory		21,907.7	521.6

Note: Weighted summary fuel usage totals assume the land disposal/on-site injection percentage splits are (80%/20%), (80%/20%), (100%/0%), and (100%/0%) for SWD, SWE, DWD, and DWE model wells respectively.

Note: 1 BOE = 42 gallons of diesel

NSPS Non-Water Quality Environmental Impacts: GOM Zero Discharge

Region: Offshore Gulf of Mexico (GOM)
Technology: Zero Discharge (via Haul and Land Disposal & Offshore/On-Site Cuttings Injection) @ 10.20% CRN

Daily Drill Rig Emissions

Model Well	Air Emissions (short tons/model well)					
	NO_x	THC	SO_2	CO	TSP	Total
Shallow Water Development	3.1570	1.6954	0.2150	0.4525	0.2475	5.7674
Shallow Water Exploratory	3.1570	1.6954	0.2150	0.4525	0.2475	5.7674
Deep Water Development	3.1570	1.6954	0.2150	0.4525	0.2475	5.7674
Deep Water Exploratory	3.1570	1.6954	0.2150	0.4525	0.2475	5.7674

Note: Drill rig emissions include impacts from all rig daily operations and one helicopter trip to and from the rig.

Daily Drill Rig Fuel Usage

Model Well	gallons per model well	Barrels of Oil Equivalent (BOE) per model well
Shallow Water Development	15,388.0	366.4
Shallow Water Exploratory	15,388.0	366.4
Deep Water Development	15,388.0	366.4
Deep Water Exploratory	15,388.0	366.4
TOTAL	61,552.0	1,465.5

NSPS ZD Annual Air Emissions/Fuel Usage

Model Well	SBF (ZD @ 10.20%)		OBF (Zero Discharge)		WBF (Discharge @ 10.20%)	
	Total Air Emissions (tons)	Barrels of Oil Equivalent (BOE)	Total Air Emissions (tons)	Barrels of Oil Equivalent (BOE)	Total Air Emissions (tons)	Barrels of Oil Equivalent (BOE)
Shallow Water Development	0.0000	0.0	225.7900	14,428.0	1,628.2074	103,842.5
Shallow Water Exploratory	0.0000	0.0	0.0000	0.0	0.0000	0.0
Deep Water Development	146.9212	19,180.9	391.7899	25,021.5	1,374.2349	87,644.9
Deep Water Exploratory	0.0000	0.0	0.0000	0.0	0.0000	0.0
TOTAL	**146.9**	**19,180.9**	**617.6**	**39,449.6**	**3,002.4**	**191,487.4**
	3,766.9					
	250,117.9					

Note: Summary annual air emission/fuel usage totals assume the following number of GOM SBF wells (existing sources) under this technology option: 8 SWD wells, 0 SWE wells, 16 DWD wells, and 0 DWE wells

Note: Summary annual air emission/fuel usage totals assume the following number of GOM OBF wells (existing sources) will be subject to zero discharge under this technology option: 1 SWD wells, 0 SWE wells, 0 DWD wells, and 0 DWE wells

Note: Summary annual air emission/fuel usage totals assume the following number of GOM WBF wells (existing sources) under this technology option: 25 SWD wells, 0 SWE wells, 10 DWD wells, and 0 DWE wells

Note: 1 BOE = 42 gallons of diesel

NSPS Non-Water Quality Environmental Impacts: GOM Zero Discharge

Region: Offshore Gulf of Mexico (GOM)
Technology: Zero Discharge (via Haul and Land Disposal & Offshore/On-Site Cuttings Injection) @ 10.20% CRN

Annual Air Emissions (SBF Model Well -Zero Discharge)

Model Well	Air Emissions (short tons/model well)					
	NO_x	THC	SO_2	CO	TSP	Total
Shallow Water Development	0.0000	0.0000	0.0000	0.0000	0.0000	0.0000
Shallow Water Exploratory	0.0000	0.0000	0.0000	0.0000	0.0000	0.0000
Deep Water Development	80.6416	42.7134	5.4966	11.7429	6.3268	146.9212
Deep Water Exploratory	0.0000	0.0000	0.0000	0.0000	0.0000	0.0000
Total	**80.6416**	**42.7134**	**5.4966**	**11.7429**	**6.3268**	

Annual Air Emissions (OBF Baseline Model Well - Zero Discharging at 10.20% CRN)

Model Well	Air Emissions (short tons/model well)					
	NOx	THC	SO2	CO	TSP	Total
Shallow Water Development	124.0536	65.4057	8.4573	18.1415	9.7318	225.7900
Shallow Water Exploratory	0.0000	0.0000	0.0000	0.0000	0.0000	0.0000
Deep Water Development	215.0443	113.9023	14.6576	31.3143	16.8714	391.7899
Deep Water Exploratory	0.0000	0.0000	0.0000	0.0000	0.0000	0.0000
Total	**339.0979**	**179.3081**	**23.1148**	**49.4558**	**26.6032**	

Annual Air Emissions (WBF Baseline Model Well - Discharging at 10.20% CRN)

Model Well	Air Emissions (short tons/model well)					
	NO_x	THC	SO_2	CO	TSP	Total
Shallow Water Development	889.5180	476.3138	60.5592	127.7389	69.7111	1,623.8410
Shallow Water Exploratory	0.0000	0.0000	0.0000	0.0000	0.0000	0.0000
Deep Water Development	750.7684	402.0170	51.1130	107.8138	58.8374	1,370.5496
Deep Water Exploratory	0.0000	0.0000	0.0000	0.0000	0.0000	0.0000
Total	**1,640.2864**	**878.3307**	**111.6723**	**235.5528**	**128.5485**	

Note: Summary annual air emission totals assume the following number of GOM SBF wells (existing sources) under this technology option: 8 SWD wells, 0 SWE wells, 16 DWD wells, and 0 DWE wells

Note: Summary annual air emission totals assume the following number of GOM OBF wells (existing sources) will be subject to zero discharge under this technology option: 1 SWD wells, 0 SWE wells, 0 DWD wells, and 0 DWE wells

Note: Summary annual air emission totals assume the following number of GOM WBF wells (existing sources) under this technology option: 25 SWD wells, 0 SWE wells, 10 DWD wells, and 0 DWE wells