EPA 821-R-95-028

EPA

Method 1632: Determination of Inorganic Arsenic in Water by Hydride Generation Flame Atomic Absorption

Printed on Recycled Paper

Acknowledgments

Method 1632 was prepared under the direction of William A. Telliard of the U.S. Environmental Protection Agency's (EPA's) Office of Water (OW), Engineering and Analysis Division (EAD). The method was prepared under EPA Contract 68-C3-0337 by the DynCorp Environmental Programs Division with assistance from Quality Works, Inc. and Interface, Inc. The method is based on procedures developed by Eric Crecelius of the Battelle Marine Sciences Laboratory in Sequim, Washington.

Disclaimer

This method has been reviewed and approved for publication by the Engineering and Analysis Division of the U.S. Environmental Protection Agency. Mention of trade names or commercial products does not constitute endorsement or recommendation for use.

Questions concerning this method or its application should be addressed to:

W.A. Telliard
USEPA Office of Water
Analytical Methods Staff
Mail Code 4303
401 M Street, SW
Washington, DC 20460
Phone: 202/260–7120
Fax: 202/260–7185

Introduction

This analytical method was designed to support water quality monitoring programs authorized under the Clean Water Act. Section 304(a) of the Clean Water Act requires EPA to publish water quality criteria that reflect the latest scientific knowledge about the physical fate (e.g., concentration and dispersal) of pollutants, the effects of pollutants on ecological and human health, and the effect of pollutants on biological community diversity, productivity, and stability.

Section 303 of the Clean Water Act requires states to set a water quality standard for each body of water within its boundaries. A state water quality standard consists of a designated use or uses of a waterbody or a segment of a waterbody, the water quality criteria that are necessary to protect the designated use or uses, and an antidegradation policy. These water quality standards serve two purposes: (1) they establish the water quality goals for a specific waterbody, and (2) they are the basis for establishing water quality-based treatment controls and strategies beyond the technology-based controls required by Sections 301(b) and 306 of the Clean Water Act.

In defining water quality standards, the state may use narrative criteria, numeric criteria, or both. However, the 1987 amendments to the Clean Water Act required states to adopt numeric criteria for toxic pollutants (designated in Section 307(a) of the Act) based on EPA Section 304(a) criteria or other scientific data, when the discharge or presence of those toxic pollutants could reasonably be expected to interfere with designated uses.

In some cases, these water quality criteria are as much as 280 times lower than those achievable using existing EPA methods and required to support technology-based permits. Therefore, EPA developed new sampling and analysis methods to specifically address state needs for measuring toxic metals at water quality criteria levels, when such measurements are necessary to protect designated uses in state water quality standards. The latest criteria published by EPA are those listed in the National Toxics Rule (57 *FR* 60848). This rule includes water quality criteria for 13 metals, and it is these criteria on which the new sampling and analysis methods are based. Method 1632 was specifically developed to provide reliable measurements of inorganic arsenic at EPA WQC levels using hydride generation flame atomic absorption techniques.

In developing these methods, EPA found that one of the greatest difficulties in measuring pollutants at these levels was precluding sample contamination during collection, transport, and analysis. The degree of difficulty, however, is highly dependent on the metal and site-specific conditions. This analytical method, therefore, is designed to provide the level of protection necessary to preclude contamination in nearly all situations. It is also designed to provide the procedures necessary to produce reliable results at the lowest possible water quality criteria published by EPA. In recognition of the variety of situations to which this method may be applied, and in recognition of continuing technological advances, the method is performance based. Alternative procedures may be used, so long as those procedures are demonstrated to yield reliable results.

Requests for additional copies should be directed to:

U.S. EPA NCEPI
11029 Kenwood Road
Cincinnati, OH 45242
513/489–8190

Note: This method is intended to be performance based, and the laboratory is permitted to omit any step or modify any procedure if *all* performance requirements set forth in this method are met. The laboratory is *not* allowed to omit any quality control analyses. The terms "must," "may," and "should" are included throughout this method and are intended to illustrate the importance of the procedures in producing verifiable data at water quality criteria levels. The term "must" is used to indicate that researchers in trace metals analysis have found certain procedures essential in successfully analyzing samples and avoiding contamination; however, these procedures can be modified or omitted if the laboratory can demonstrate that data quality is not affected.

Method 1632

Inorganic Arsenic in Water by Hydride Generation Flame AA

1.0 Scope and Application

1.1 This method is for determination of total inorganic arsenic (As) in filtered and unfiltered water by hydride generation and flame atomic absorption detection. The method is for use in EPA's data gathering and monitoring programs associated with the Clean Water Act. The method is based on a contractor-developed method (Reference 16.1) and on peer-reviewed, published procedures for the determination of arsenic in aqueous samples (Reference 16.2).

1.2 This method is accompanied by Method 1669: *Sampling Ambient Water for Determination of Trace Metals at EPA Water Quality Criteria Levels* (Sampling Method). The Sampling Method is necessary to ensure that contamination will not compromise trace metals determinations during the sampling process.

1.3 This method is designed for measurement of dissolved and total arsenic in the range of 10–200 ng/L. This method is not intended for determination of arsenic at concentrations normally found in treated and untreated discharges from industrial facilities. Existing regulations (40 *CFR* Parts 400–500) typically limit concentrations in industrial discharges to the part-per-billion (ppb) range, whereas ambient arsenic concentrations are normally in the low part-per-trillion (ppt) range.

1.4 The detection limits and quantitation levels in this method are usually dependent on the level of background elements rather than instrumental limitations. The method detection limit (MDL; 40 *CFR* 136, Appendix B) for total inorganic arsenic has been determined to be 2 ng/L when no background elements or interferences are present. The minimum level (ML) has been established at 10 ng/L.

1.5 The ease of contaminating water samples with the metal(s) of interest and interfering substances cannot be overemphasized. This method includes suggestions for improvements in facilities and analytical techniques that should maximize the ability of the laboratory to make reliable trace metals determinations and minimize contamination. Section 4.0 gives these suggestions. Additional suggestions for improvement of existing facilities may be found in EPA's *Guidance for Establishing Trace Metals Clean Rooms in Existing Facilities,* which is available from the National Center for Environmental Publications and Information (NCEPI) at the address listed in the introduction to this document.

1.6 Clean and ultraclean—The terms "clean" and "ultraclean" have been applied to the techniques needed to reduce or eliminate contamination in trace metals determinations. These terms are not used in this method because they lack an exact definition. However, the information provided in this method is consistent with EPA's summary guidance on clean and ultraclean techniques.

1.7 This method follows the EPA Environmental Methods Management Council's "Format for Method Documentation."

1.8 This method is "performance based." The analyst is permitted to modify the method to overcome interferences or lower the cost of measurements if all performance criteria are met. Section 9.1.2 gives the requirements for establishing method equivalency.

1.9 Any modification of this method, beyond those expressly permitted, shall be considered a major modification subject to application and approval of alternate test procedures at 40 *CFR* 136.4 and 136.5.

1.10 Each analyst who uses this method must demonstrate the ability to generate acceptable results using the procedure in Section 9.2.

1.11 This method is accompanied by a data verification and validation guidance document, *Guidance on the Documentation and Evaluation of Trace Metals Data Collected for CWA Compliance Monitoring*. Before this method is used, data users should state data quality objectives (DQOs) required for a project.

2.0 Summary of Method

2.1 A 100–2000 mL sample is collected directly into a specially cleaned, pretested, fluoropolymer, conventional or linear polyethylene, polycarbonate, or polypropylene bottle using sample handling techniques specially designed for collection of metals at trace levels (Reference 16.3).

2.2 The sample is either field or laboratory preserved by the addition of 5 mL of pretested 10% HNO_3 per liter of sample, depending on the time between sample collection and arrival at the laboratory.

2.3 An aliquot of sample is removed and placed in a specially designed reaction vessel.

2.4 Before analysis, 6 M HCl and 4% $NaBH_4$ solution are added to convert organic and inorganic arsenic to volatile arsines.

2.5 The arsines are purged from the sample onto a cooled glass trap packed with 15% OV-3 on Chromasorb® WAW-DMCS0, or equivalent.

2.6 The trapped arsines are thermally desorbed, in order of increasing boiling points, into an inert gas stream that carries them into the flame of an atomic absorption spectrophotometer for detection. The first arsine to be desorbed will be AsH_3, which represents total inorganic arsenic in the sample.

2.7 Quality is ensured through calibration and testing of the hydride generation, purging, and detection systems.

3.0 Definitions

3.1 As defined by this method, total inorganic arsenic means all $NaBH_4$-reducible inorganic arsenic compounds found in aqueous solution. This method can be extended to measure organic arsenic as well. Organic arsenic includes, but is not limited to, monomethylarsonate and dimethylarsonate. In this context, "total" arsenic refers to the forms and species of arsenic, not to the total recoverable or dissolved fraction normally determined in an unfiltered or filtered sample, respectively. In this method, the total recoverable fraction will be referred to as "total recoverable" or "unfiltered."

3.2 As defined by this method, dissolved inorganic arsenic means all $NaBH_4$-reducible inorganic arsenic compounds found in aqueous solution filtrate after passing the sample through a 0.45-µM capsule filter.

3.3 Definitions of other terms used in this method are given in the glossary at the end of the method.

4.0 Contamination and Interferences

4.1 Preventing ambient water samples from becoming contaminated during the sampling and analytical process constitutes one of the greatest difficulties encountered in trace metals determinations. Over the last two decades, marine chemists have come to recognize that much of the historical data on the concentrations of dissolved trace metals in seawater are erroneously high because the concentrations reflect contamination from sampling and analysis rather than ambient levels. Therefore, it is imperative that extreme care be taken to avoid contamination when collecting and analyzing ambient water samples for trace metals.

4.2 Samples may become contaminated by numerous routes. Potential sources of trace metals contamination during sampling include: metallic or metal-containing labware (e.g., talc gloves that contain high levels of zinc), containers, sampling equipment, reagents, and reagent water; improperly cleaned and stored equipment, labware, and reagents; and atmospheric inputs such as dirt and dust. Even human contact can be a source of trace metals contamination.

4.3 Contamination Control

4.3.1 Philosophy—The philosophy behind contamination control is to ensure that any object or substance that contacts the sample is metal free and free from any material that may contain metals.

4.3.1.1 The integrity of the results produced cannot be compromised by contamination of samples. This method and the Sampling Method give requirements and suggestions for control of sample contamination.

4.3.1.2 Substances in a sample cannot be allowed to contaminate the laboratory work area or instrumentation used for trace metals measurements. This method gives requirements and suggestions for protecting the laboratory.

4.3.1.3 Although contamination control is essential, personnel health and safety remain the highest priority. The Sampling Method and Section 5 of this method give requirements and suggestions for personnel safety.

4.3.2 Avoiding contamination—The best way to control contamination is to completely avoid exposure of the sample to contamination in the first place. Avoiding exposure means performing operations in an area known to be free from contamination. Two of the most important factors in avoiding/reducing sample contamination are (1) an awareness of potential sources of contamination and (2) strict attention to work being done. Therefore, it is imperative that the procedures described in this method be carried out by well-trained, experienced personnel.

4.3.3 Use a clean environment—The ideal environment for processing samples is a class 100 clean room (Section 1.5). If a clean room is not available, all sample preparation should be performed in a class 100 clean bench or a nonmetal glove box fed by arsenic- and particle-free air or nitrogen. Digestions should be performed in a nonmetal fume hood situated, ideally, in the clean room.

4.3.4 Minimize exposure—The apparatus that will contact samples, blanks, or standard solutions should be opened or exposed only in a clean room, clean bench, or glove box so that exposure to an uncontrolled atmosphere is minimized. When not being used, the apparatus should be covered with clean plastic wrap, stored in the clean bench or in a plastic box or glove box, or bagged in clean zip-type bags. Minimizing the time between cleaning and use will also minimize contamination.

4.3.5 Clean work surfaces—Before a given batch of samples is processed, all work surfaces in the hood, clean bench, or glove box in which the samples will be processed should be cleaned by wiping with a lint-free cloth or wipe soaked with reagent water.

4.3.6 Wear gloves—Sampling personnel must wear clean, nontalc gloves during all operations involving handling of the apparatus, samples, and blanks. Only clean gloves may touch the apparatus. If another object or substance is touched, the glove(s) must be changed before again handling the apparatus. If it is even suspected that gloves have become contaminated, work must be halted, the contaminated gloves removed, and a new pair of clean gloves put on. Wearing multiple layers of clean gloves will allow the old pair to be quickly stripped with minimal disruption to the work activity.

4.3.7 Use metal-free apparatus—All apparatus used for determination of metals at ambient water quality criteria levels must be nonmetallic, free of material that may contain metals, or both.

4.3.7.1 Construction materials—Only fluoropolymer (FEP, PTFE), conventional or linear polyethylene, polycarbonate, or polypropylene containers should be used for samples that will be analyzed for arsenic. PTFE is less desirable than FEP because the sintered material in PTFE may contain contaminants and is susceptible to serious memory effects (Reference 16.4). All materials, regardless of construction, that will directly or indirectly contact the sample must be cleaned using the procedures given in this method and must be known to be clean and metal free before proceeding.

4.3.7.2 Serialization—It is recommended that serial numbers be indelibly marked or etched on each piece of apparatus so that contamination can be traced, and logbooks should be maintained to track the sample from the container through the labware to injection into the instrument. It may be useful to dedicate separate sets of labware to different sample types; e.g., receiving waters vs. effluents. However, the apparatus used for processing blanks and standards must be mixed with the apparatus used to process samples so that contamination of all labware can be detected.

4.3.7.3 The laboratory or cleaning facility is responsible for cleaning the apparatus used by the sampling team. If there are any indications that the apparatus is not clean when received by the sampling team (e.g., ripped storage bags), an assessment of the likelihood of contamination must be made. Sampling must not proceed if it is possible that the apparatus is contaminated. If the apparatus is contaminated, it must be returned to the laboratory or cleaning facility for proper cleaning before any sampling activity resumes.

4.3.8 Avoid sources of contamination—Avoid contamination by being aware of potential sources and routes of contamination.

4.3.8.1 Contamination by carryover—Contamination may occur when a sample containing low concentrations of metals is processed immediately after a

sample containing relatively high concentrations of these metals. To reduce carryover, the sample introduction system may be rinsed between samples with dilute acid and reagent water. When an unusually concentrated sample is encountered, it is followed by analysis of a laboratory blank to check for carryover. Samples known or suspected to contain the lowest concentration of metals should be analyzed first followed by samples containing higher levels.

4.3.8.2 Contamination by samples—Significant laboratory or instrument contamination may result when untreated effluents, in-process waters, landfill leachates, and other samples containing high concentrations of inorganic substances are processed and analyzed. This method is not intended for application to these samples, and samples containing high concentrations should not be permitted into the clean room and laboratory dedicated for processing trace metals samples.

4.3.8.3 Contamination by indirect contact—Apparatus that may not directly come in contact with the samples may still be a source of contamination. For example, clean tubing placed in a dirty plastic bag may pick up contamination from the bag and subsequently transfer the contamination to the sample. Therefore, it is imperative that every piece of the Apparatus that is directly or indirectly used in the collection, processing, and analysis of ambient water samples be cleaned as specified in Section 11.

4.3.8.4 Contamination by airborne particulate matter—Less obvious substances capable of contaminating samples include airborne particles. Samples may be contaminated by airborne dust, dirt, particles, or vapors from unfiltered air supplies; nearby corroded or rusted pipes, wires, or other fixtures; or metal-containing paint. Whenever possible, sample processing and analysis should occur as far as possible from sources of airborne contamination.

4.4 Interferences

4.4.1 If the transfer line between the cold trap and the atomizer is not well heated, water vapor may condense in the line. Such condensation can interfere with the determination of dimethylarsine.

4.4.2 High concentrations of cobalt, copper, iron, mercury, or nickel can cause interferences through precipitation as reduced metals and blockage of transfer lines and fittings

5.0 Safety

5.1 The toxicity or carcinogenicity of each chemical used in this method has not been precisely determined; however, each compound should be treated as a potential health hazard. Exposure to these compounds should be reduced to the lowest possible level. It is recommended that the laboratory purchase a dilute standard solution of the As in this method. If primary solutions are prepared, they shall be prepared in a hood, and a NIOSH/MESA-approved toxic gas respirator shall be worn when high concentrations are handled.

5.2 This method does not address all safety issues associated with its use. The laboratory is responsible for maintaining a current awareness file of OSHA regulations for the safe handling of the chemicals specified in this method. A reference file of material safety data sheets (MSDSs) should also be made available to all personnel involved in these analyses. It is also suggested that the laboratory perform personal hygiene monitoring of each analyst who uses this method and that the results of this monitoring be made available to the analyst. Additional information on laboratory safety can be found in References 16.5–16.8. The references and bibliography at the end of Reference 16.8 are particularly comprehensive in dealing with the general subject of laboratory safety.

5.3 Samples suspected to contain high concentrations of As are handled using essentially the same techniques used in handling radioactive or infectious materials. Well-ventilated, controlled access laboratories are required. Assistance in evaluating the health hazards of particular laboratory conditions may be obtained from certain consulting laboratories and from State Departments of Health or Labor, many of which have an industrial health service. Each laboratory must develop a strict safety program for handling As.

5.3.1 Facility—When samples known or suspected of containing high concentrations of arsenic are handled, all operations (including removal of samples from sample containers, weighing, transferring, and mixing) should be performed in a glove box demonstrated to be leaktight or in a fume hood demonstrated to have adequate air flow. Gross losses to the laboratory ventilation system must not be allowed. Handling of the dilute solutions normally used in analytical and animal work presents no inhalation hazards except in an accident.

5.3.2 Protective equipment—Disposable plastic gloves, apron or laboratory coat, safety glasses or mask, and a glove box or fume hood adequate for radioactive work should be used. During analytical operations that may give rise to aerosols or dusts, personnel should wear respirators equipped with activated carbon filters.

5.3.3 Training—Workers must be trained in the proper method of removing contaminated gloves and clothing without contacting the exterior surfaces.

5.3.4 Personal hygiene—Hands and forearms should be washed thoroughly after each manipulation and before breaks (coffee, lunch, and shift).

5.3.5 Confinement—Isolated work areas posted with signs, segregated glassware and tools, and plastic absorbent paper on bench tops will aid in confining contamination.

5.3.6 Effluent vapors—The effluent from the AAS should pass through either a column of activated charcoal or a trap designed to remove As.

5.3.7 Waste handling—Good technique includes minimizing contaminated waste. Plastic bag liners should be used in waste cans. Janitors and other personnel must be trained in the safe handling of waste.

5.3.8 Decontamination

5.3.8.1 Decontamination of personnel—Use any mild soap with plenty of scrubbing action.

5.3.8.2 Glassware, tools, and surfaces—Satisfactory cleaning may be accomplished by washing with any detergent and water.

5.3.9 Laundry—Clothing known to be contaminated should be collected in plastic bags. Persons who convey the bags and launder the clothing should be advised of the hazard and trained in proper handling. If the launderer knows of the potential problem, the clothing may be put into a washer without contact. The washer should be run through a cycle before being used again for other clothing.

5.3.10 Wipe tests—A useful method of determining cleanliness of work surfaces and tools is to wipe the surface with a piece of filter paper. Extraction and analysis by this method can achieve a limit of detection of less than 1 ng per wipe. Less than 0.1 µg per wipe indicates acceptable cleanliness; anything higher warrants further cleaning. More than 10 µg on a wipe constitutes an acute hazard and requires prompt cleaning before further use of the equipment or work space, and indicates that unacceptable work practices have been employed.

6.0 Apparatus and Materials

Note: *Brand names, suppliers, and part numbers are for illustration purposes only and no endorsement is implied. Equivalent performance may be achieved using apparatus and materials other than those specified here. The laboratory is responsible for meeting the performance requirements of this method.*

6.1 Sampling equipment

6.1.1 Sample collection bottles-Fluoropolymer, conventional or linear polyethylene, polycarbonate, or polypropylene, 500–1000 mL

6.1.2 Cleaning—Bottles are cleaned with liquid detergent and thoroughly rinsed with reagent water. They are then heated to 50–60°C in concentrated reagent grade HNO_3 for at least 2 h. The bottles are rinsed with reagent water, then immersed in a hot (50–60°) bath of 1N trace metal grade HCl for at least 48 h. The bottles are then thoroughly rinsed with reagent water and filled with 0.1% (v/v) ultrapure HCl and double-bagged in new polyethylene zip-type bags until needed.

6.2 Equipment for bottle and glassware cleaning

6.2.1 Vats, up to 200-L capacity, constructed of high-density polyethylene (HDPE) or other nonmetallic, noncontaminating material suitable for holding concentrated HNO_3 and dilute HCl

6.2.2 Panel immersion heater, all-fluoropolymer coated, capable of maintaining a temperature of 60–75°C in a vat of the size used

6.2.3 Laboratory sink in class 100 clean area, with high-flow reagent water for rinsing

6.2.4 Clean bench, class 100, for drying rinsed bottles.

6.3 Atomic absorption spectrophotometer (AAS)—Any atomic absorption spectrophotometer may serve as a detector. A bracket is required to hold the quartz atomizer in the optical path of the instrument. Table 1 gives typical conditions for the spectrophotometer.

6.3.1 Electrodeless discharge lamp for measuring arsenic at 193.7 nm

6.3.2 Quartz cuvette burner tube (Reference 16.2), 70 mm long and 9 mm in diameter with two 6-mm o.d. side tubes, each 25 mm long. Figure 1a shows a schematic of the tube and bracket.

6.4 Equipment for reaction vessel—Figure 1b shows the schematic diagram for the vessel used for the reaction of the sample with sodium borohydride. The system consists of the following:

6.4.1 125-mL gas wash bottle (Corning # 1760-125 or equivalent) onto which an 8-mm o.d. sidearm inlet tube 2 cm long has been grafted

6.4.2 Silicone rubber stopper septum (Ace Glass #9096-32 or equivalent)

6.4.3 Four-way Teflon stopcock valve capable of switching of the helium from the purge to the analysis mode of operation

6.4.4 Flow meter/needle valve capable of controlling and measuring gas flow rate to the reaction vessel at 150 (± 30) mL/min

6.4.5 Silicone tubing—All glass-to-glass connections are made with silicone rubber sleeves.

6.5 Equipment for cryogenic trap—Figure 1c shows the schematic diagram for the trap. It consists of the following:

6.5.1 Nichrome wire (22-gauge)

6.5.2 Variacs for controlling Nichrome wire

6.5.3 A 6-mm o.d. borosilicate glass U-tube about 30 cm long with a 2-cm radius of bend (or similar dimensions to fit into a tall widemouth Dewar flask), which has been silanized and half-packed with 15% OV-3 on Chromasorb® WAW-DMCS (45–60 mesh), and the ends of which have been packed with silanized glass wool.

6.5.3.1 Conditioning the trap—The input side of the trap (the side that is not packed) is connected with silicone rubber tubing to He at a flow rate of 40 mL/min, and the trap is placed in an oven at 175°C for 2 h. At the end of this time, inject two 25-µL aliquots of GC column conditioner (Silyl-8®, Supelco, Inc., or equivalent) through the silicone tubing into the glass trap. Return the trap to the oven, with the He still flowing, for 24 h.

6.5.3.2 After conditioning, the trap is wrapped with approximately 1.8 m of 22-gauge Nichrome wire, the ends of which are affixed to crimp-on electrical contacts. The wire-wrapped column is coated with approximately 2 mm of silicon rubber caulking compound.

6.5.3.3 The trap is connected by silicone rubber tubing to the output of the reaction vessel. The output side of the trap is connected by 6-mm diameter borosilicate tubing that has been wrapped by Nichrome wire to the input of the flame atomizer.

6.5.4 Dewar flask capable of containing the trap described in Section 6.5.3.

6.6 Recorder/integrator—Any integrator with a range compatible with the AAS is acceptable.

6.7 Pipettors—All-plastic pneumatic fixed volume and variable pipettors in the range of 10 uL to 5.0 mL.

6.8 Analytical balance capable of weighing to the nearest 0.01 gram

7.0 Reagents and Standards

7.1 Reagent water—Water demonstrated to be free from As and potentially interfering substances at the MDL. Prepared by distillation, deionization, reverse osmosis, anodic/cathodic stripping voltammetry, or other technique that removes As and potential interferant(s).

7.2 Hydrochloric acid—Trace-metal purified reagent HCl.

7.3 6M hydrochloric acid—Equal volumes of trace metal grade concentrated HCl (Section 7.2) and reagent water (Section 7.1) are combined to give a solution approximately 6M in HCl.

7.4 Nitric acid—Trace-metal purified reagent HNO_3

7.5 10% nitric acid—Nitric acid (HNO_3): 10% wt, Seastar, or equivalent.

7.6 Sodium borohydride solution–4 g of >98% $NaBH_4$ (previously analyzed and shown to be free of measurable arsenic) are dissolved in 100 mL of 0.02 M NaOH solution. This solution is stable for only 8–10 h, and must be made fresh daily.

7.7 Liquid nitrogen for cooling the cryogenic trap

7.8 Helium—Grade 4.5 (standard laboratory grade) helium.

7.9 Hydrogen—Grade 4.5 (standard laboratory grade) hydrogen.

7.10 Air—Grade 4.5 (standard laboratory grade) air.

7.11 QC sample concentrate—From a source different than the one used to prepare calibration standards, prepare a QC sample concentrate containing 1.50 µg/L As in reagent water (Section 7.1) preserved with sufficient HNO_3 to bring the pH to <2.

7.12 Arsenic Standards

7.12.1 Stock standard solution (1000 mg/L)—Either procure A2LA-certified aqueous standards from a supplier and verify by comparison to a second standard from a separate source, or dissolve 1.320 g of arsenic trioxide (As_2O_3) in 100 mL of reagent water (Section 7.1) containing 4 g NaOH. Acidify the solution with 20 mL concentrated HNO_3 and dilute to 1.0 liter.

9.1.2.2.2 A listing of metal measured (As), by name and CAS Registry number

9.1.2.2.3 A narrative stating reason(s) for the modification(s)

9.1.2.2.4 Results from all quality control (QC) tests comparing the modified method to this method, including:

(a) Calibration
(b) Calibration verification
(c) Initial precision and recovery (Section 9.2)
(d) Analysis of blanks
(e) Accuracy assessment

9.1.2.2.5 Data that will allow an independent reviewer to validate each determination by tracing the instrument output (peak height, area, or other signal) to the final result. These data are to include, where possible:

(a) Sample numbers and other identifiers
(b) Preparation dates
(c) Analysis dates and times
(d) Analysis sequence/run chronology
(e) Sample volume
(f) Volume before each preparation step
(g) Volume after each preparation step
(h) Final volume before analysis
(i) Dilution data
(j) Instrument and operating conditions (make, model, revision, modifications)
(k) Sample introduction system (ultrasonic nebulizer, hydride generator, flow injection system, etc.)
(l) Operating conditions (ashing temperature, temperature program, flow rates, etc.)
(m) Detector (type, operating conditions, etc.)
(n) Printer tapes and other recordings of raw data
(o) Quantitation reports, data system outputs, and other data to link the raw data to the results reported

9.1.3 Analyses of blanks are required to demonstrate freedom from contamination. Section 9.5 describes the required types, procedures, and criteria for analysis of blanks.

9.1.4 The laboratory shall spike at least 10% of the samples with As to monitor method performance. Section 9.3 describes this test. When results of these spikes indicate

atypical method performance for samples, an alternative extraction or cleanup technique must be used to bring method performance within acceptable limits. If method performance for spikes cannot be brought within the limits given in this method, the result may not be reported for regulatory compliance purposes.

9.1.5 The laboratory shall, on an ongoing basis, demonstrate through calibration verification and through analysis of the ongoing precision and recovery aliquot that the analytical system is in control. Sections 9.6 and 10.2 describe these procedures.

9.1.6 The laboratory shall maintain records to define the quality of data that are generated. Section 9.3.4 describes the development of accuracy statements.

9.2 Initial demonstration of laboratory capability

9.2.1 Method detection limit—To establish the ability to detect As, the analyst shall determine the MDL per the procedure in 40 *CFR* 136, Appendix B using the apparatus, reagents, and standards that will be used in the practice of this method. The laboratory must produce an MDL that is no more than one-tenth the regulatory compliance level or that is less than the MDL listed in Table 1, whichever is greater.

9.2.2 Initial precision and recovery (IPR)—To establish the ability to generate acceptable precision and recovery, the analyst shall perform the following operations.

9.2.2.1 Analyze four aliquots of reagent water spiked with As at 0.015 µg/L according to the procedures in this method. Prepare these by diluting each of four 1.0-mL aliquots of the QC Sample Concentrate to 100 mL. All digestion, extraction, and concentration steps, and the containers, labware, and reagents that will be used with samples must be used in this test.

9.2.2.2 Using results of the set of four analyses, compute the average percent recovery (X) in each aliquot and the standard deviation(s) of the recovery.

9.2.2.3 Compare s and X with the corresponding limits for initial precision and recovery in Table 2. If s and X meet the acceptance criteria, system performance is acceptable and analysis of blanks and samples may begin. If, however, s exceeds the precision limit or X falls outside the range for accuracy, system performance is unacceptable for As. Correct the problem and repeat the test (Section 9.2.2.1).

9.3 Method accuracy—To assess the performance of the method on a given sample matrix, the laboratory must perform matrix spike (MS) and matrix spike duplicate (MSD) sample analyses on 10% of the samples from each site being monitored, or at least one MS sample analysis and one MSD sample analysis must be performed for each sample set (samples collected from the same site at the same time, to a maximum of 10 samples), whichever is more frequent.

9.3.1 The concentration of the MS and MSD is determined as follows:

9.3.1.1 If, as in compliance monitoring, the concentration of As in the sample is being checked against a regulatory concentration limit, the spike must be at that limit or at five times the background concentration, whichever is greater.

9.3.1.2 If the concentration is not being checked against a regulatory limit, the concentration must be at five times the background concentration or at five times the ML in Table 1, whichever is greater.

9.3.2 Assessing spike recovery

9.3.2.1 Determine the background concentration (B) of As by analyzing one sample aliquot according to the procedures specified in this method.

9.3.2.2 If necessary, prepare a matrix spiking concentrate that will produce the appropriate level (Section 9.3.1) in the sample when the concentrate is added.

9.3.2.3 Spike a second sample aliquot with the QC check sample concentrate (or, if necessary, with the matrix spiking concentrate) and analyze it to determine the concentration after spiking (A).

9.3.2.4 Calculate each percent recovery (P) as 100(A - B)/T, where T is the known true value of the spike.

9.3.3 Compare the percent recovery (P) with the corresponding QC acceptance criteria in Table 2. If P falls outside the designated range for recovery, As has failed the acceptance criteria.

9.3.3.1 If As has failed the acceptance criteria, analyze the ongoing precision and recovery standard (Section 9.6). If the OPR is within its respective limit (Table 2), the analytical system is in control and the problem can be attributed to the sample matrix.

9.3.3.2 For samples that exhibit matrix problems, further isolate As from the sample matrix using chelation, extraction, concentration, hydride generation, or other means, and repeat the accuracy test (Section 9.3.2).

9.3.3.3 If the recovery for As remains outside the acceptance criteria, the analytical result in the unspiked sample is suspect and may not be reported for regulatory compliance purposes.

9.3.4 Recovery for samples should be assessed and records maintained.

9.3.4.1 After the analysis of five samples of a given matrix type (river water, lake water, etc.) for which As passes the tests in Section 9.3.3, compute the average percent recovery (R) and the standard deviation of the percent recovery (SR). Express the accuracy assessment as a percent recovery interval from R - 2SR to R + 2SR for each matrix. For example, if R = 90% and SR = 10% for five analyses of river water, the accuracy interval is expressed as 70–110%.

9.3.4.2 Update the accuracy assessment in each matrix regularly (e.g., after each five to ten new measurements).

9.4 Precision of matrix spike duplicates

9.4.1 Calculate the relative percent difference (RPD) between the MS and MSD according to the equation below using the concentrations found in the MS and MSD. Do not use the recoveries calculated in Section 9.3.2.4 for this calculation because the RPD of recoveries is inflated when the background concentration is near the spike concentration.

$$RPD = 100\frac{(|D1-D2|)}{(D1+D2)/2}$$

Where:
D1 = concentration of the analyte in the MS sample
D1 = concentration of the analyte in the MSD sample

9.4.2 Compare the RPD with the limits in Table 2. If the criteria are not met, the analytical system is judged to be out of control. Correct the problem and reanalyze all samples in the sample set associated with the MS/MSD that failed the RPD test.

9.5 Blanks—Blanks are analyzed to demonstrate freedom from contamination.

9.5.1 Laboratory (method) blank

9.5.1.1 Prepare a method blank with each sample batch (samples of the same matrix started through the preparation process on the same 12-hour shift, to a maximum of 10 samples). Analyze the blank immediately after analysis of the OPR (Section 9.6) to demonstrate freedom from contamination.

9.5.1.2 If As or any potentially interfering substance is found in the blank at a concentration equal to or greater than the MDL (Table 1), sample analysis must be halted, the source of the contamination determined, the problem corrected, and the sample batch and fresh method blank reanalyzed.

9.5.1.3 Alternatively, if a sufficient number of blanks (three minimum) are analyzed to characterize the nature of a blank, the average concentration plus two standard deviations must be less than the regulatory compliance level.

9.5.1.4 If the result for a single blank remains above the MDL or if the result for the average concentration plus two standard deviations of three or more blanks exceeds the regulatory compliance level, results for samples associated with those blanks may not be reported for regulatory compliance purposes. Stated another way, results for all initial precision and recovery tests (Section 9.2) and all samples must be associated with an uncontaminated method blank before these results may be reported for regulatory compliance purposes.

9.5.2 Field blank

9.5.2.1 Analyze the field blank(s) shipped with each set of samples (samples collected from the same site at the same time, to a maximum of 10 samples). If the samples are filtered for the determination of dissolved As, the field blank shall be filtered as well. Analyze the blank immediately before analyzing the samples in the batch.

9.5.2.2 If As or any potentially interfering substance is found in the field blank at a concentration equal to or greater than the MDL (Table 1), or greater than one-fifth the level in the associated sample, whichever is greater, results for associated samples may be the result of contamination and may not be reported for regulatory compliance purposes.

9.5.2.3 Alternatively, if a sufficient number of field blanks (three minimum) are analyzed to characterize the nature of the field blank, the average concentration plus two standard deviations must be less than the regulatory compliance level or less than one-half the level in the associated sample, whichever is greater.

9.5.2.4 If contamination of the field blanks and associated samples is known or suspected, the laboratory should communicate this to the sampling team so that the source of contamination can be identified and corrective measures taken before the next sampling event.

9.5.3 Equipment blanks—Before any sampling equipment is used at a given site, the laboratory or cleaning facility is required to generate equipment blanks to demonstrate that the sampling equipment is free from contamination. Two types of equipment blanks are required: bottle blanks and sampler check blanks.

9.5.3.1 Bottle blanks—After undergoing appropriate cleaning procedures (Section 11.4), bottles should be subjected to conditions of use to verify the effectiveness of the cleaning procedures. A representative set of sample bottles

should be filled with reagent water acidified to pH < 2 and allowed to stand for a minimum of 24 h. Ideally, the time that the bottles are allowed to stand should be as close as possible to the actual time that sample will be in contact with the bottle. After standing, the water should be analyzed for any signs of contamination. If any bottle shows signs of contamination, the problem must be identified, the cleaning procedures corrected or cleaning solutions changed, and all affected bottles recleaned.

9.5.3.2 Sampler check blanks—Sampler check blanks are generated in the laboratory or at the equipment cleaning contractor's facility by processing reagent water through the sampling devices using the same procedures that are used in the field (see Sampling Method). Therefore, the "clean hands/dirty hands" technique used during field sampling should be followed when preparing sampler check blanks at the laboratory or cleaning facility.

9.5.3.2.1 Sampler check blanks are generated by filling a large carboy or other container with reagent water (Section 7.2) and processing the reagent water through the equipment using the same procedures that are used in the field (see Sampling Method). For example, manual grab sampler check blanks are collected by directly submerging a sample bottle into the water, filling the bottle, and capping. Subsurface sampler check blanks are collected by immersing the sampler into the water and pumping water into a sample container. "Clean hands/dirty hands" techniques must be used.

9.5.3.2.2 The sampler check blank must be analyzed using the procedures in this method. If As or any potentially interfering substance is detected in the blank, the source of contamination or interference must be identified and the problem corrected. The equipment must be demonstrated to be free from As before the equipment may be used in the field.

9.5.3.2.3 Sampler check blanks must be run on *all* equipment that will be used in the field. If, for example, samples are to be collected using both a grab sampling device and a subsurface sampling device, a sampler check blank must be run on both pieces of equipment.

9.6 Ongoing precision and recovery

9.6.1 Prepare a precision and recovery sample (laboratory-fortified method blank) identical to the initial precision and recovery aliquots (Section 9.2) with each sample batch (samples of the same matrix started through the extraction process on the same 12-

hour shift, to a maximum of 10 samples) by diluting a 1.0-mL aliquot of QC check sample concentrate to 100 mL with reagent water.

9.6.2 Analyze the OPR aliquot before analyzing the method blank and samples from the same batch.

9.6.3 Compute the percent recovery of As in the OPR aliquot using the procedure given in this method.

9.6.4 Compare the concentration to the limits for ongoing recovery in Table 2. If the acceptance criteria are met, system performance is acceptable and analysis of blanks and samples may proceed. If, however, recovery falls outside of the range given, the analytical processes are not being performed properly. Correct the problem, reprepare the sample batch, and repeat the OPR test (Section 9.6).

9.6.5 Add results that pass the specifications in Section 9.6.4 to initial and previous ongoing data for As in each matrix. Update QC charts to form a graphic representation of continued laboratory performance. Develop a statement of laboratory accuracy in each matrix type by calculating the average percent recovery (R) and the standard deviation of percent recovery (SR). Express the accuracy as a recovery interval from R - 2SR to R + 2SR. For example, if R = 95% and SR = 5%, the accuracy is 85–105%.

9.7 The specifications in this method can be met if the instrument used is calibrated properly and then maintained in a calibrated state. A given instrument will provide the most reproducible results if dedicated to the settings and conditions required for the analyses of As by this method.

9.8 Depending on specific program requirements, field duplicates may be collected to determine the precision of the sampling technique. The relative percent difference (RPD) between field duplicates should be less than 20%.

10.0 Calibration and Standardization

10.1 Calibration—Calibrate at a minimum of three points, one of which must be the ML (Table 1), and another that must be near the upper end of the linear dynamic range. Calibration is required before any samples or blanks are analyzed.

10.1.1 External standard calibration

10.1.1.1 Calculate the response factor (RF) for As in each CAL solution using the following equation and the height or area produced.

$$RF = \frac{(R_x)}{(C_x)}$$

Where:

R_x = *height or area of the signal for* A_s
C_x = *concentration of compound injected* (μg/L)

10.1.1.2 Calculate the mean RF (M), the standard deviation of the RF (SD), and the relative standard deviation (RSD) of the mean, where RSD = 100 x SD/M.

10.1.1.3 Linearity—If the RSD of the mean RF is less than 25% over the calibration range, an averaged response factor may be used. Otherwise, a calibration curve must be used over the calibration range.

Note: *The reagents used in the hydride generation process are likely to cause some absorbance in the absence of As. Using a mean RF to quantitate samples will therefore result in decreasing accuracy with decreasing concentrations of As. To avoid this, it is recommended that a calibration curve that is not forced through the origin be used in lieu of a mean RF, even if the %RSD of the Rfs is less than 25%.*

10.2 Calibration verification—Immediately after calibration, an initial calibration verification should be performed. Adjustment of the instrument is performed until verification criteria are met. Only after these criteria are met may blanks and samples be analyzed.

10.2.1 Verify the specificity of the instrument for As and adjust the wavelength or tuning until the resolving power specified in this method is met.

10.2.2 Inject the mid-point calibration standard (Section 10.1) or a dilution of the QC check sample concentrate with a concentration near the midpoint of the calibration range.

10.2.3 Compute the percent recovery of As using the mean response or calibration curve obtained in the initial calibration.

10.2.4 Compare the recovery with the corresponding limit for calibration verification in Table 2. If acceptance criteria are met, system performance is acceptable and analysis of blanks and samples may continue using the response from the initial calibration. If acceptance criteria are not met, system performance is unacceptable. Locate and correct the problem and/or prepare a new calibration check standard and repeat the test (Sections 10.2.2–10.2.4), or recalibrate the system according to this method and Section 10.1.

10.2.5 Calibration should be verified following every ten samples by analyzing the mid-point calibration standard. If the recovery does not meet the acceptance criteria specified in Table 2, analysis must be halted, the problem corrected, and the instrument recalibrated. All samples after the last acceptable calibration verification must be reanalyzed.

11.0 Procedure

11.1 Set the AA system up according to manufacturer's instructions. The settings in Tables 3 and 4 can be used as a guide. Calibrate the instrument according to Section 10.

Note: *Precision and sensitivity are affected by gas flow rates and these must be individually optimized for each system, using the figures in Table 4 as an initial guide.*

11.2 To light the flame, turn on all gases and expose the end of the quartz cuvette to a flame. At this point, a flame will be burning out the ends of the tube. Allow the tube to heat for approximately 5 min, then place a flat metal spatula over each end of the tube in sequence. An invisible air/hydrogen flame should now be burning in the center of the cuvette. To check for the flame, place a mirror near the end of the tube.

11.3 Place a known volume of aqueous sample (up to 70 mL) into the reaction vessel. If less than 70 mL of sample is used, add sufficient reagent water to result in a total volume of 70 mL. Add 5.0 mL of 6M HCl. Set the four-way valve on the reaction vessel to pass the flow of He through the sample and onto the trap and begin purging the vessel with He.

11.4 Lower the trap into a Dewar flask containing liquid nitrogen (LN_2) and top the flask off with LN_2 to a constant level.

11.5 Add 10 mL of $NaBH_4$ solution slowly (over a period of approximately 2 min) through the rubber septum with a disposable hypodermic syringe and begin timing the reaction. After 7 min, turn the stopcock on the four-way valve to bypass the reaction vessel and pass helium directly to the trap.

11.6 Quickly remove the trap from the LN_2, activate the heating coils to heat the trap and transfer line to 80°C, and begin recording output from the AA system.

11.7 To ensure that all organic reduction products have been desorbed from the trap, maintain the trap temperature at 80°C and keep He flowing through the trap for at least 3 min between samples.

12.0 Data Analysis and Calculations

12.1 Compute the concentration of As in ng/L (parts-per-trillion; ppt) using the calibration data (Section 10.1) according to the following equation:

$$C_x\ (\mu g/L) = \frac{R_x}{RF}$$

***where the terms are defined in Section* 10.1.1**

12.2 If the concentration exceeds the linear dynamic range of the instrument, dilute the sample by successive factors of 10 1u until the concentration is within the linear dynamic range.

12.3 Report results at or above the ML for As found in samples and determined in standards. Report all results for As found in blanks, regardless of level.

12.4 Report results to one significant figure at or below the MDL, two significant figures between the MDL and ML, and three significant figures at or above the ML.

12.5 Do not perform blank subtraction on the sample results.

13.0 Method Performance

Before this method was documented, an MDL study was conducted using the techniques described in the method. Additional method performance studies will be conducted in 1995, and the method will be revised as needed to reflect the results of those studies.

14.0 Pollution Prevention

14.1 Pollution prevention encompasses any technique that reduces or eliminates the quantity or toxicity of waste at the point of generation. Many opportunities for pollution prevention exist in laboratory operation. EPA has established a preferred hierarchy of environmental management techniques that places pollution prevention as the management option of first choice. Whenever feasible, laboratory personnel should use pollution prevention techniques to address their waste generation. When wastes cannot be feasibly reduced at the source, the Agency recommends recycling as the next best option. The acids used in this method should be reused as practicable by purifying by electrochemical techniques. The only other chemicals used in this method are the neat materials used in preparing standards. These standards are used in extremely small amounts and pose little threat to the environment when managed

properly. Standards should be prepared in volumes consistent with laboratory use to minimize the disposal of excess volumes of expired standards.

14.2 For information about pollution prevention that may be applied to laboratories and research institutions, consult *Less is Better: Laboratory Chemical Management for Waste Reduction*, available from the American Chemical Society's Department of Governmental Relations and Science Policy, 1155 16th Street NW, Washington DC 20036, 202/872–4477.

15.0 Waste Management

15.1 The laboratory is responsible for complying with all federal, state, and local regulations governing waste management, particularly hazardous waste identification rules and land disposal restrictions, and for protecting the air, water, and land by minimizing and controlling all releases from fume hoods and bench operations. Compliance with all sewage discharge permits and regulations is also required.

15.2 Acids and samples at pH < 2 must be neutralized before being disposed, or must be handled as hazardous waste.

15.3 For further information on waste management, consult *The Waste Management Manual for Laboratory Personnel* and *Less is Better: Laboratory Chemical Management for Waste Reduction*, both available from the American Chemical Society's Department of Government Relations and Science Policy, 1155 16th Street NW, Washington, DC 20036.

16.0 References

16.1 Crecelius, E.A.; Bloom, N.S.; Cowan, C.E.; Jenne, E.A. *Speciation of Selenium and Arsenic in Natural Waters and Sediments, Volume 2: Arsenic Speciation.* Final Report. Prepared for Electric Power Research Institute, Palo Alto, CA by Battelle, Pacific Northwest Laboratories, Richland, WA. 1986.

16.2 Andreae, M.O. "Determination of Arsenic Species in Natural Waters," *Anal. Chem.* **1977**, *49*, 820.

16.3 Method 1669, "Method for Sampling Ambient Water for Determination of Metals at EPA Ambient Criteria Levels," U.S. Environmental Protection Agency, Office of Water, Office of Science and Technology, Engineering and Analysis Division (4303), 401 M St SW, Washington, DC 20460 (1995).

16.4 Patterson, C.C.; Settle, D.M. "Accuracy in Trace Analysis"; In *National Bureau of Standards Special Publication 422*; LaFleur, P.D., Ed., U.S. Government Printing Office, Washington, DC, 1976.

16.5 "Working with Carcinogens," Department of Health, Education, and Welfare, Public Health Service, Centers for Disease Control, NIOSH, Publication 77-206, Aug. 1977, NTIS PB-277256.

16.6 "OSHA Safety and Health Standards, General Industry," OSHA 2206, 29 *CFR* 1910.

16.7 "Safety in Academic Chemistry Laboratories," ACS Committee on Chemical Safety, 1979.

16.8 "Standard Methods for the Examination of Water and Wastewater," 18th ed. and later revisions, American Public Health Association, 1015 15th Street NW, Washington DC 20005, 1-35: Section 1090 (Safety), 1992.

17.0 Glossary

The definitions and purposes below are specific to this method, but have been conformed to common usage as much as possible.

17.1 **Ambient Water**—Waters in the natural environment (e.g., rivers, lakes, streams, and other receiving waters), as opposed to effluent discharges.

17.2 **Analytical Shift**—All the 12-hour periods during which analyses are performed. The period begins with the purging of the OPR standard and ends exactly 12 hours later. All analyses both started and completed within this 12-hour period are valid.

17.3 **Calibration Standard (CAL)**—A solution prepared from a dilute mixed standard and/or stock solutions and used to calibrate the response of the instrument with respect to analyte concentration.

17.4 **Equipment Blank**—An aliquot of reagent water that is subjected in the laboratory to all aspects of sample collection and analysis, including contact with all sampling devices and apparatus. The purpose of the equipment blank is to determine if the sampling devices and apparatus for sample collection have been adequately cleaned before shipment to the field site. An acceptable equipment blank must be achieved before the sampling devices and apparatus are used for sample collection. In addition, equipment blanks should be run on random, representative sets of gloves, storage bags, and plastic wrap for each lot to determine if these materials are free from contamination before use.

17.5 **Field Blank**—An aliquot of reagent water that is placed in a sample container in the laboratory, shipped to the field, and treated as a sample in all respects, including contact with the sampling devices and exposure to sampling site conditions, storage, preservation, and all analytical procedures, which may include filtration. The purpose of the field blank is to determine if the field or sample transporting procedures and environments have contaminated the sample.

17.6 **Field Duplicates (FD1 and FD2)**—Two separate samples collected in separate sample bottles at the same time and place under identical circumstances and treated exactly the same throughout field and laboratory procedures. Analyses of FD1 and FD2 give a measure of the precision associated with sample collection, preservation, and storage, as well as with laboratory procedures.

17.7 **Initial Precision and Recovery (IPR)**—Four aliquots of the ongoing precision and recovery standard analyzed to establish the ability to generate acceptable precision and accuracy. IPRs are performed before a method is used for the first time and any time the method or instrumentation is modified.

17.8 **Intercomparison Study**—An exercise in which samples are prepared and split by a reference laboratory, then analyzed by one or more testing laboratories and the reference laboratory. The intercomparison, with a reputable laboratory as the reference laboratory, serves as the best test of the precision and accuracy of the analyses at natural environmental levels.

17.9 **Laboratory Blank**—An aliquot of reagent water that is treated exactly as a sample including exposure to all glassware, equipment, solvents, reagents, internal standards, and surrogates that are used with samples. The laboratory blank is used to determine if analytes or interferences are present in the laboratory environment, the reagents, or the apparatus.

17.10 **Laboratory Control Sample (LCS)**—See Ongoing Precision and Recovery (OPR) Standard.

17.11 **Laboratory Duplicates (LD1 and LD2)**—Two aliquots of the same sample taken in the laboratory from the same sample bottle and analyzed separately using the referenced method. Analyses of LD1 and LD2 indicate precision associated with laboratory procedures, but not with sample collection, preservation, transportation, or storage procedures.

17.12 **Laboratory Fortified Blank**—See Ongoing Precision and Recovery (OPR) Standard.

17.13 **Laboratory Fortified Sample Matrix**—See Matrix Spike (MS) and Matrix Spike Duplicate (MSD).

17.14 **Laboratory Reagent Blank**—See Laboratory Blank.

17.15 **Matrix Spike (MS) and Matrix Spike Duplicate (MSD)**—Aliquots of an environmental sample to which known quantities of the analytes are added in the laboratory. The MS and

MSD are analyzed exactly like a sample. Their purpose is to quantify the bias and precision caused by the sample matrix. The background concentrations of the analytes in the sample matrix must be determined in a separate aliquot and the measured values in the MS and MSD corrected for background concentrations.

17.16 **May**—This action, activity, or procedural step is optional.

17.17 **May Not**—This action, activity, or procedural step is prohibited.

17.18 **Method Blank**—See Laboratory Blank.

17.19 **Minimum Level (ML)**—The lowest level at which the entire analytical system gives a recognizable signal and acceptable calibration point.

17.20 **Must**—This action, activity, or procedural step is required.

17.21 **Ongoing Precision and Recovery (OPR) Standard** - A laboratory blank spiked with known quantities of analytes. The OPR is analyzed exactly like a sample. Its purpose is to assure that the results produced by the laboratory remain within the limits specified in the referenced methods for precision and accuracy.

17.22 **Preparation Blank**—See Laboratory Blank.

17.23 **Primary Dilution Standard**—A solution containing the analytes that is purchased or prepared from stock solutions and diluted as needed to prepare calibration solutions and other solutions.

17.24 **Quality Control Sample (QCS)**—A sample containing all or a subset of the analytes at known concentrations. The QCS is obtained from a source external to the laboratory or is prepared from a source of standards different from the source of calibration standards. It is used to check laboratory performance with test materials prepared external to the normal preparation process.

17.25 **Reagent Water**—Water demonstrated to be free from the metal(s) of interest and potentially interfering substances at the MDL for that metal in the referenced method.

17.26 **Should**—This action, activity, or procedural step is suggested but not required.

17.27 **Stock Solution**—A solution containing an analyte that is prepared using a reference material traceable to EPA, the National Institute of Science and Technology (NIST), or a source that will attest to the purity and authenticity of the reference material.

TABLE 1: METHOD DETECTION LIMIT (MDL) AND MINIMUM LEVEL (ML)

Method Detection Limit (MDL):	0.002 µg/L
Minimum Level (ML):	0.01000 µg/L

TABLE 2: METHOD QC CRITERIA

IPR Average Recovery (X)	59–143%
IPR Standard Deviation(s)	< 42%
Matrix Spike Recovery (P)[1]	55–146%
OPR Recovery (P)[1]	55–146%
MS/MSD RPD	< 20%
Calibration Verification	76–116%

[1] OPR recovery required only if matrix spike recovery does not meet criteria

TABLE 3: TYPICAL SPECTROPHOTOMETER SETTINGS

Parameter	Typical Setting
EDL energy	59
EDL power	8 W
Wavelength	193.7 nm
Slit width	0.7 nm

TABLE 4: TYPICAL FLOWS AND PRESSURES FOR GASES IN THE HYDRIDE GENERATION SYSTEM

Gas	Flow Rate (mL/min)	Pressure (lb/in^2)
He	150	10
H_2	350	20
Air	180	20
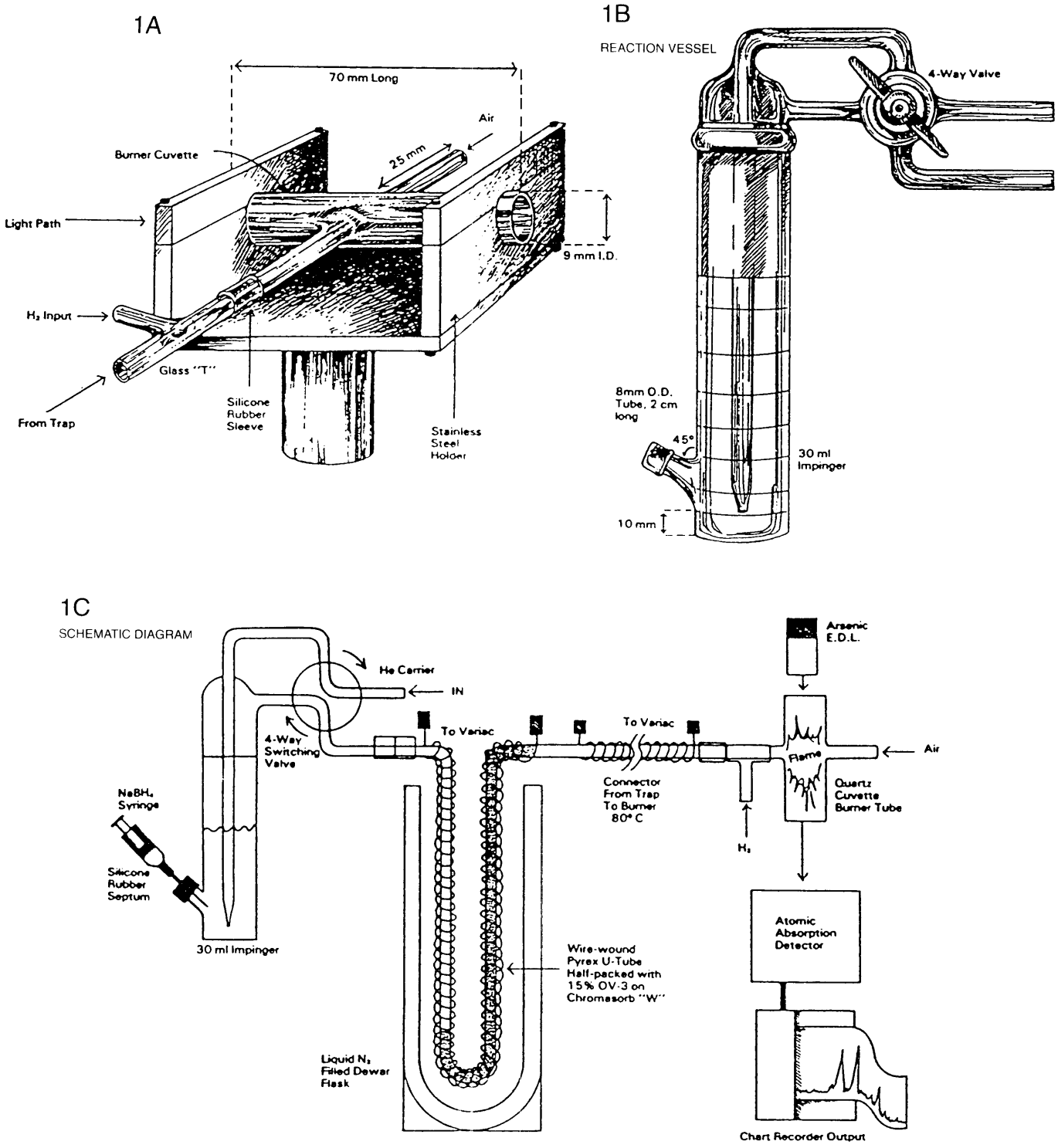
Figure 1. Arsenic Speciation Apparatus: (a) Quartz Cuvette Burner Tube, (b) Reaction Vessel, and (c) Schematic Diagram