United States
Environmental Protection
Agency

Region 4
345 Courtland Street, NE
Atlanta, GA 30365

EPA 904/9-93-001B
November 1993

Appendix to the Environmental Impact Statement

Final

Cedar Bay Cogeneration Project
Jacksonville, Florida

R5 OLS 3800

APPENDIX A

DRAFT NPDES PERMIT NO. FL0061204

U.S. Environmental Protection Agency
Region 5, Library (PL-12J)
77 West Jackson Boulevard, 12th Floor
Chicago, IL 60604-3590

PERMIT NO. FL0061204
Minor Non-POTW

UNITED STATES ENVIRONMENTAL PROTECTION AGENCY
REGION IV

AUTHORIZATION TO DISCHARGE UNDER THE
NATIONAL POLLUTANT DISCHARGE ELIMINATION SYSTEM

In compliance with the provisions of the Clean Water Act, as amended (33 U.S.C. 1251 et seq.; the "Act"),

Cedar Bay Cogeneration, Inc.
7475 Wisconsin Avenue
Bethesda, Maryland 20814

is authorized to discharge from a facility located at

Cedar Bay Cogeneration Facility
9469 Eastport Road
Duval County
Jacksonville, Florida 32218

to receiving waters named

Broward River

in accordance with effluent limitations, monitoring requirements, and other conditions set forth herein. The permit consists of this cover sheet, Part I 3 pages, Part II 16 pages, Part III 2 pages and Part IV 8 pages.

This permit shall become effective on

This permit and the authorization to discharge shall expire at midnight,

DRAFT

AUG 0 3 1993

Date Issued

W. Ray Cunningham, Director
Water Management Division

PART I

A. EFFLUENT LIMITATIONS AND MONITORING REQUIREMENTS - FINAL

1. During the period beginning on the effective date of this permit and lasting through the term of this permit, the permittee is authorized to discharge - ground runoff, roof and yard drain discharges from the Yard Area Runoff Pond Outfall 003 to the Broward River.

Such discharges shall be limited and monitored by the permittee as specified below:

PARAMETERS	DISCHARGE LIMITATIONS Daily Maximum	MONITORING REQUIREMENTS Measurement Frequency	Sample Type
Flow, MGD	Report	1/Day of Discharge	Weir measurement
Total Suspended Solids, mg/l	Report	1/Day of Discharge	Grab

2. The pH shall not be less than 6.0 standard units nor greater than 8.5 standard units and shall be monitored 1/day of discharge.

3. There shall be no discharge of floating solids or visible foam in other than trace amounts nor shall the effluent cause a visible sheen on the receiving water.

4. Monitoring requirements are not applicable during periods of no discharge.

5. Samples taken in compliance with the monitoring requirements specified above shall be taken at the following location(s): point(s) of discharge from the Yard Area Pond to the Broward River prior to mixing with any other waste stream.

A-2

PART I

B. EFFLUENT LIMITATIONS AND MONITORING REQUIREMENTS - FINAL

1. During the period beginning on the effective date of this permit and lasting through the term of this permit, the permittee is authorized to discharge from Outfall 008 - Coal, Limestone, and Ash Storage Areas Runoff Retention Basin effluent to the Broward River.

Such discharges shall be limited and monitored by the permittee as specified below:

PARAMETERS	DISCHARGE LIMITATIONS Instantaneous Maximum	MONITORING REQUIREMENTS Measurement Frequency	Sample Type
Flow, MGD	Report	1/Day of Discharge	Weir measurement
Total Suspended Solids, mg/l	50[1]	1/Day of Discharge	Grab

2. The pH shall not be less than 6.0 standard units nor greater than 8.5 standard units, and shall be monitored once per day of discharge by grab sample.

3. There shall be no discharge of floating solids or visible foam in other than trace amounts nor shall the effluent cause a visible sheen on the receiving water.

4. Samples taken in compliance with the monitoring requirements specified above shall be taken at the following location(s): point(s) of discharge from the Coal, Limestone, and Ash Retention Basin prior to mixing with any other waste stream.

[1] This limitation is only applicable to flow resulting from the 10-year, 24-hour storm event, or less.

A-3

PART I

C. SCHEDULE OF COMPLIANCE

1. The permittee shall achieve compliance with the effluent limitations specified for discharges in accordance with the following schedule:

a. Operational Level Attained.....Commencement of Discharges

b. Best Management Practices Plan (Part IV)

(1) Develop Plan.....No later than 6 months after the effective date of the permit

(2) Implement Plan.....No later than 18 months after the effective date of the permit

c. Submittal of EPA Form 2C.....No later than 2 years from the commencement of discharge

2. No later than 14 calendar days following a date identified in the above schedule of compliance, the permittee shall submit either a report of progress or, in the case of specific actions being required by identified dates, a written notice of compliance or noncompliance. In the latter case, the notice shall include the cause of noncompliance, any remedial actions taken, and the probability of meeting the next scheduled requirement.

PART II

STANDARD CONDITIONS FOR "NO DISCHARGE" NPDES PERMITS

SECTION A. GENERAL CONDITIONS

1. Duty to Comply

The permittee must comply with all conditions of this permit. Any permit noncompliance constitutes a violation of the Clean Water Act and is grounds for enforcement action; for permit termination, revocation and reissuance, or modification; or for denial of a permit renewal application.

2. Penalties for Violations of Permit Conditions

Any person who violates a permit condition is subject to a civil penalty not to exceed $25,000 per day of such violation. Any person who willfully violates permit conditions is subject to a fine of not less than $5000 nor more than $50,000 per day of violation, or by imprisonment for not more than 3 years, or both. Any person who negligently violates permit conditions is subject to a fine of not less than $2500 nor more than $25,000 per day of violation, or by imprisonment for not more than 1 year, or both.

3. Duty to Mitigate

The permittee shall take all reasonable steps to minimize or prevent any violation of this permit which has a reasonable likelihood of adversely affecting human health or the enviroment.

4. Permit Modification

After notice and opportunity for a hearing, this permit may be modified, terminated or revoked for cause including, but not limited to, the following:

a. Violation of any terms or conditions of this permit;

b. Obtaining this permit by misrepresentation or failure to disclose fully all relevant facts;

c. Information newly acquired by the Agency indicating that any condition poses a threat to human health or the environment.

If the permittee believes that any past or planned activity would be cause for modification or revocation and reissuance under 40 CFR 122.62, the permittee must report such information to the Permit Issuing Authority. The submittal of a new application may be required of the permittee. The filing of a request by the permittee for a permit modification, revocation and reissuance, or termination, or a notification of planned changes or anticipated noncompliance, does not stay any permit condition.

5. Civil and Criminal Liability

Except as provided in permit conditions on "Bypassing" Section B, Paragraph B-3 and "Upsets" Section B, Paragraph B-4, nothing in this permit shall be construed to relieve the permittee from civil or criminal penalties for noncompliance.

6. Oil and Hazardous Substance Liability

Nothing in this permit shall be construed to preclude the institution of any legal action or relieve the permittee from any responsibilities, liabilities, or penalties to which the permittee is or may be subject under Section 311 of the Act.

7. State Laws

Nothing in this permit shall be construed to preclude the institution of any legal action or relieve the permittee from any responsibilities, liabilities, or penalties established pursuant to any applicable State law or regulation under authority preserved by Section 510 of the Act.

8. Property Rights

The issuance of this permit does not convey any property rights of any sort, or any exclusive privileges, nor does it authorize any injury to private property or any invasion of personal rights, nor any infringemeent of Federal, State or local laws or regulations.

9. Onshore or Offshore Construction

This permit does not authorize or approve the construction of any onshore or offshore physical structures or facilities or the undertaking of any work in any waters of the United States (including wetlands).

10. Severability

The provisions of this permit are severable, and if any provision of this permit, or the application of any provision of this permit to any circumstance, is held invalid, the application of such provision to other circumstances, and the remainder of this permit, shall not be affected thereby.

11. Duty to Provide Information

The permittee shall furnish to the Permit Issuing Authority, within a reasonable time, any information which the Permit Issuing Authority may request to determine whether cause exists for modifying, revoking and reissuing, or terminating this permit or to determine compliance with this permit. The permittee shall also furnish to the Permit Issuing Authority upon request, copies of records required to be kept by this permit.

SECTION B. OPERATION AND MAINTENANCE OF POLLUTION CONTROLS

1. Proper Operation and Maintenance

The permittee shall at all times properly operate and maintain all facilities and systems of treatment and control (and related appurtenances) which are installed or used by the permittee to achieve compliance with the conditions of this permit. Proper operation and maintenance also includes adequate laboratory controls and appropriate quality assurance procedures. This provision requires the operation of back-up or auxiliary facilities or similar systems which are installed by a permittee only when the operation is necessary to achieve compliance with the conditions of the permit.

2. Need to Halt or Reduce not a Defense

It shall not be a defense for a permittee in an enforcement action that it would have been necessary to halt or reduce the permitted activity in order to maintain compliance with the condition of this permit.

3. Bypass of Treatment Facilities

a. Definitions

(1) "Bypass" means the intentional diversion of waste streams from any portion of a treatment facility, which is not a designed or established operating mode for the facility.

(2) "Severe property damage" means substantial physical damage to property, damage to the treatment facilities which causes them to become inoperable, or substantial and permanent loss of natural resources which can reasonably be expected to occur in the absence of a bypass. Severe property damage does not mean economic loss caused by delays in production.

b. Notice

(1) Anticipated bypass. If the permittee knows in advance of the need for a bypass, it shall submit prior notice, if possible at least ten days before the date of the bypass; including an evaluation of the anticipated quality and effect of the bypass.

(2) Unanticipated bypass. The permittee shall submit notice of an unanticipated bypass as required in Section D, Paragraph D-4 (24-hour notice).

c. Prohibition of bypass.

(1) Bypass is prohibited and the Permit Issuing Authority may take enforcement action against a permittee for bypass, unless:

(a) The bypass was unavoidable to prevent loss of life, personal injury, or severe property damage;

(b) There were no feasible alternatives to the bypass (e.g., maintenance of sufficient reserve holding capacity, the use of auxiliary treatment facilities, retention of untreated wastes, waste hauling, maintenance of a sufficient spare parts inventory, maintenance of an emergency power supply, or maintenance during normal periods of equipment downtime, etc.). This condition is not satisfied if adequate back-up equipment should have been installed in the exercise of reasonable engineering judgment to prevent a bypass which occurred during normal periods of equipment downtime or preventive maintenance; and

(c) The permittee submitted notices as required under Paragraph b. of this section.

(2) The Permit Issuing Authority may, within its authority, approve an anticipated bypass, after considering its adverse effects, if the Permit Issuing Authority determines that it will meet the three conditions listed above in Paragraph c.(1) of this section.

4. Upsets

"Upset" means an exceptional incident in which there is unintentional and temporary noncompliance with technology-based permit effluent limitations because of factors beyond the reasonable control of the permittee. An upset does not include noncompliance to the extent caused by operational error, improperly designed treatment facilities, inadequate treatment facilities, lack of preventive maintenance, or careless or improper operation. An upset constitutes an affirmative defense to an action brought for non-compliance with such technology-based permit limitation if the requirements of 40 CFR 122.41(n)(3) are met. (Note that this provision does not apply to water quality-based requirements.)

5. Removed Substances

This permit does not authorize discharge of solids, sludge, filter backwash, or other pollutants removed in the course of wastewater treatment.

SECTION C. INSPECTION AND ENTRY

The permittee shall allow the Permit Issuing Authority, or an authorized representative, upon the presentation of credentials and other documents as may be required by law, to:

a. Enter upon the permittee's premises where a regulated facility or activity is located or conducted, or where records must be kept under the conditions of this permit;

b. Have access to and copy, at reasonable times, any records that must be kept under the conditions of this permit; and

c. Inspect at reasonable time any facilities, equipment (including monitoring and control equipment), practices, or operations regulated or required under this permit; and

d. Sample or monitor at reasonable times, for the purposes of assuring permit compliance or as otherwise authorized by the Clean Water Act, any substances or parameters at any location.

SECTION D. REPORTING REQUIREMENTS

1. Change in Discharge

The permittee shall give notice to the Permit Issuing Authority as soon as possible of any planned physical alterations or additions to the permitted facility. Notice is required only when the alteration or addition could change the method of disposal.

2. Anticipated Noncompliance

The permittee shall give advance notice to the Permit Issuing Authority of any planned change in the permitted facility or activity which may result in noncompliance with permit requirements. Any maintenance of facilities, which might necessitate unavoidable interruption of operation, shall be scheduled during noncritical water quality periods.

3. Transfer of Ownership or Control

A permit may be automatically transferred to another party if:

a. The permittee notifies the Permit Issuing Authority of the proposed transfer at least 30 days in advance of the proposed transfer date;

b. The notice includes a written agreement between the existing and new permittee containing a specific date for transfer of permit responsibility, coverage, and liability between them; and

c. The Permit Issuing Authority does not notify the existing permittee of his or her intent to modify or revoke and reissue the permit. If this notice is not received, the transfer is effective on the date specified in the agreement mentioned in paragraph b.

4. Twenty-Four Hour Reporting

The permittee shall orally report any noncompliance which may endanger health or the environment within 24 hours from the time the permittee becomes aware of the circumstances. A written submission shall also be provided within 5 days of the time the permittee becomes aware of the circumstances. The written submission shall contain a description of the noncompliance and its cause, an estimate of the volume discharged and the name of the receiving stream, the period of noncompliance, including exact dates and times; and if the noncompliance has not been corrected, the anticipated time it is expected to continue, and steps taken or planned to reduce, eliminate, and prevent reoccurrence of the noncompliance. The Permit Issuing Authority may verbally waive the written report, on a case-by-case basis, when the oral report is made.

The following violations shall be included in the 24 hour report:

a. An unanticipated bypass which results in a discharge to waters of the U.S.

b. Any upset which results in a discharge to waters of the U.S.

5. Other Noncompliance

The permittee shall report in narrative form, all instances of noncompliance not previously reported under Section D, Paragraphs D-2 and D-4. The reports shall contain the information listed in Paragraph D-4.

6. Duty to Reapply

If the permittee wishes to continue an activity regulated by this permit after the expiration date of this permit, the permittee must apply for and obtain a new permit. The application should be submitted at least 180 days before the expiration date of this permit. The Permit Issuing Authority may grant permission to submit an application less than 180 days in advance but not later than the permit expiration date.

Where EPA is the Permit Issuing Authority, the terms and conditions of this permit are automatically continued in accordance with 40 CFR 122.6, only where the permittee has submitted a timely and complete application for a renewal permit and the Permit Issuing Authority is unable through no fault of the permittee to issue a new permit before the expiration date.

7. Signatory Requirements

All applications, reports, or information submitted to the Permit Issuing Authority shall be signed and certified.

a. All permit applications shall be signed as follows:

(1) For a corporation: by a responsible corporate officer. For the purpose of this Section, a responsible corporate officer means: (1) a president, secretary, treasurer or vice president of the corporation in charge of a principal business function, or any other person who performs similar policy - or decision-making functions for the corporation, or (2) the manager of one or more manufacturing production or operating facilities employing more than 250 persons or having gross annual sales or expenditures exceeding $25 million (in second quarter 1980 dollars), if authority to sign documents has been assigned or delegated to the manager in accordance with corporate procedures.

(2) For a partnership or sole proprietorship: by a general partner or the proprietor, respectively; or

(3) For a municipality, State, Federal, or other public agency: by either a principal executive officer or ranking elected official.

b. All reports required by the permit and other information requested by the Permit Issuing Authority shall be signed by a person described above or by a duly authorized representative of that person. A person is a duly authorized representative only if:

(1) The authorization is made in writing by a person described above;

(2) The authorization specifies either an individual or a position having responsibility for the overall operation of the regulated facility or activity, such as the position of plant manager, operator of a well or a well field, superintendent, position of equivalent responsibility, or an individual or position having overall responsibility for environmental matters for the company. (A duly authorized representative may thus be either a named individual or any individual occupying a named position.); and

(3) The written authorization is submitted to the Permit Issuing Authority.

c. Certification. Any person signing a document under paragraphs (a) or (b) of this section shall make the following certification:

"I certify under penalty of law that this document and all attachments were prepared under my direction or supervision in accordance with a system designed to assure that qualified personnel properly gather and evaluate the information submitted. Based on my inquiry of the person or persons who manage the system, or those persons directly responsible for gathering the information, the information submitted is, to the best of my knowledge and belief, true, accurate, and complete. I am aware that there are significant penalties for submitting false information, including the possibility of fine and imprisonment for knowing violations."

8. Availability of Reports

Except for data determined to be confidential under 40 CFR Part 2, all reports prepared in accordance with the terms of this permit shall be available for public inspection at the offices of the Permit Issuing Authority. As required by the Act, permit applications, permits and effluent data shall not be considered confidential.

9. Penalties for Falsification of Reports

The Clean Water Act provides that any person who knowingly makes any false material statement, representation, or certification in any record or other document submitted or required to be maintained under this permit, including monitoring reports or reports of compliance or noncompliance, or who knowingly falsifies, tampers with, or renders inaccurate any monitoring device or method required to be maintained under the Clean Water Act, shall, upon conviction, be punished by a fine of not more than $10,000 or by imprisonment for not more than 2 years, or by both.

SECTION E. DEFINITIONS

1. Permit Issuing Authority

The Regional Administrator of EPA Region IV or his designee, unless at some time in the future the State receives the authority to administer the NPDES program and assumes jurisdiction over the permit; at which time, the Director of the State program receiving authorization becomes the issuing authority.

2. Act

"Act" means the Clean Water Act (formerly referred to as the Federal Water Pollution Control Act) Public Law 92-500, as amended by Public Law 95-217, Public Law 95-576 and Public Law 100-4, 33 U.S.C. 1251 et seq.

3. Calendar Day

A calendar day is defined as the period from midnight of one day until midnight of the next day. However, for purposes of this permit, any consecutive 24-hour period that reasonably represents the calendar day may be used for sampling.

Part III

Other Requirements

A. Reporting of Monitoring Results

Monitoring results obtained for each calendar month shall be summarized and reported on a Discharge Monitoring Report (DMR) Form (EPA No. 3320-1). These forms shall be submitted after each calendar quarter and postmarked no later than the 28th day of the month following the completed calendar quarter. (For example, data for January-March shall be submitted by April 28.) Calendar quarters are January-March, April-June, July-September, and October-December. Signed copies of these, and all other reports required by Section D of Part II, Reporting Requirements, shall be submitted to the Permit Issuing Authority at the following address:

Environmental Protection Agency
Region IV
Enforcement Section
Water Permits and Enforcement Branch
Water Management Division
345 Courtland Street, N.E.
Atlanta, GA 30365

If no discharge occurs during the reporting period, sampling requirements of this permit do not apply. The statement "No Discharge" shall be written on the DMR form. If, during the term of this permit, the facility ceases discharge to surface waters, the Permit Issuing Authority and the State shall be notified immediately upon cessation of discharge. This notification shall be in writing.

B. Reopener Clause

This permit shall be modified, or alternatively, revoked and reissued to comply with any applicable effluent standard or limitation, or sludge disposal requirement issued or approved under Sections 301(b)(2)(c) and (D), the effluent standard or limitation, of sludge disposal requirement so issued or approved:

(1) Contains different conditions or is otherwise more stringent that any condition in the permit; or
(2) Controls any pollutant , or disposal method not in the permit.

The permit as modified or reissued under this paragraph shall contain any other requirements of the Act then applicable.

C. Polychlorinated Biphenyl Compounds

There shall be no discharge of polychlorinated biphenyl compounds, such as those commonly used for transformer fluid.

D. Erodible Material Storage

The permittee shall not store coal, soil, nor other similar erodible materials in a manner in which runoff is uncontrolled, nor conduct construction activities in a manner which produces uncontrolled runoff unless such uncontrolled runoff has been specifically approved by the Director. "Uncontrolled" shall mean without sedimentation basin or other controls approved by the Director. This permit may be modified to include limitations for the discharge from such facilities, when installed.

E. Detection Limits

If the results for a given sample analysis are such that any parameter is not detected at or above the minimum level for the test method used, a value of zero will be used for that sample, and the permittee shall report "NODI=B" on the Discharge Monitoring Report (DMR) Form (EPA No. 3320-1). For each quantitative sample value that is not detectable, the test method, as well as the minimum level for the analytical test method selected, shall be attached to and submitted with the DMR. The permittee shall then be considered to be in compliance with the appropriate effluent reporting requirement.

F. Combined Waste Streams

In accordance with 40 CFR Section 423.12(12), in the event that waste streams from various sources are combined for treatment or discharge, the quantity of each pollutant or pollutant property attributable to each controlled waste source shall not exceed the specified limitation for that waste source.

G. Unauthorized Discharges

Except as specifically permitted for Outfall 003 and 008, there shall be no point source discharge of any wastes to waters of the United States, or to any waste stream which enters such waters.

PART IV
BEST MANAGEMENT PRACTICES/POLLUTION PREVENTION CONDITIONS

A. GENERAL CONDITIONS

In accordance with Section 304(e) and 402(a)(2) of the Clean Water Act (CWA) as amended, 33 U.S.C. §§ 1251 et seq., and the Pollution Prevention Act of 1990, 42 U.S.C. §§ 13101-13109, the permittee must develop and implement a plan for utilizing practices incorporating pollution prevention measures. References to be considered in developing the plan are "Criteria and Standards for Best Management Practices Authorized Under Section 304(e) of the Act," found at 40 CFR 125, Subpart K and the Waste Minimization Opportunity Assessment Manual, EPA/625/7-88/003.

1. Definitions

   a. The term **"pollutants"** refers to conventional, non-conventional and toxic pollutants.
   b. Conventional pollutants are: biochemical oxygen demand (BOD), suspended solids, pH, fecal coliform bacteria and oil & grease.
   c. Non-conventional pollutants are those which are not defined as conventional or toxic, such as phosphorus, nitrogen or ammonia.
   d. Toxic pollutants include, but are not limited to: a) any toxic substance listed in Section 307(a)(1) of the CWA, any hazardous substance listed in Section 311 of the CWA, or chemical listed in Section 313(c) of the Superfund Amendments and Reauthorization Act of 1986; and b) any substance (that is not also a conventional or non-conventional pollutant) for which EPA has published an acute or chronic toxicity criterion.
   e. **"Pollution prevention"** and **"waste minimization"** refer to the first two categories of EPA's preferred hazardous waste management strategy: first, source reduction and then, recycling.
   f. **"Recycle/Reuse"** is defined as the the minimization of waste generation by recovering and reprocessing usable products that might otherwise become waste; or the reuse or reprocessing of usable waste products in place of the original stock, or for other purposes such as material recovery, material regeneration or energy production.
   g. **"Source reduction"** means any practice which: i) reduces the amount of any pollutant entering a waste stream or otherwise released into the environment (including fugitive emissions) prior to recycling, treatment or disposal; and ii) reduces the hazards to public health and the environment associated with the release of such pollutant. The term includes

equipment or technology modifications, process or procedure modifications, reformulation or redesign of products, substitution of raw materials, and improvements in housekeeping, maintenance, training, or inventory control. It does not include any practice which alters the physical, chemical, or biological characteristics or the volume of a pollutant through a process or activity which itself is not integral to, or previously considered necessary for, the production of a product or the providing of a service.

h. **"BMP3"** means a Best Management Plan incorporating the requirements of 40 CFR § 125, Subpart K, plus pollution prevention techniques associated with a Waste Minimization Assessment.

i. **"Waste Minimization Assessment"** means a systematic planned procedure with the objective of identifying ways to reduce or eliminate waste.

2. Best Management Practices/Pollution Prevention Plan

The permittee shall develop and implement a BMP3 plan for the facility which is the source of wastewater and storm water discharges covered by this permit. The plan shall be directed toward reducing those pollutants of concern which discharge to surface waters and shall be prepared in accordance with good engineering and good housekeeping practices. For the purposes of this permit, pollutants of concern shall be limited to toxic pollutants, as defined above, known to the discharger. The plan shall address all activities which could or do contribute these pollutants to the surface water discharge, including process, treatment, and ancillary activities.

3. Signatory Authority & Management Responsibilities

The BMP3 plan shall be signed in accordance with Item II.D.12. and shall be reviewed by the plant engineering staff and plant manager. A copy of the plan shall be retained at the facility and shall be made available to the permit issuing authority upon request.

The BMP3 plan shall contain a written statement from corporate or plant management indicating management's commitment to the goals of the BMP3 program. Such statements shall be publicized or made known to all facility employees. Management shall also provide training for the individuals responsible for implementing the BMP3 plan.

4. BMP3 Plan Requirements

a. name & description of facility, a map illustrating the location of the facility & adjacent receiving waters, and other maps, plot plans or drawings, as necessary;

b. overall objectives (both short-term and long-term) and scope of the plan, specific reduction goals for pollutants, anticipated dates of achievement of reduction, and a description of means for achieving each reduction goal;

c. a description of procedures relative to spill prevention, control & countermeasures and a description of measures employed to prevent storm water contamination;

d. a description of practices involving preventive maintenance, housekeeping, recordkeeping, inspections, and plant security;

e. the description of a waste minimization assessment performed in accordance with the conditions outlined in Section 5 below, results of the assessment, and a schedule for implementation of specific waste reduction practices;

5. Waste Minimization Assessment

A waste minimization assessment (WMA) shall be conducted for this facility to determine actions that could be taken to reduce waste loadings and chemical losses to all wastewater and/or storm water streams as described in Part IV.B of this permit. It shall address both short-term and long-term opportunities for minimizing waste generation at this facility, utilizing at a minimum, applicable criteria selected from Part IV.B: Required Components of a Waste Minimization Assessment, particularly for high volume and/or high toxicity components of wastewater and storm water streams. Initially, the WMA should focus primarily on actions that could be implemented quickly, thereby realizing tangible benefits to surface water quality. Long term goals and actions pertaining to waste reduction shall include investigation of the feasibility of eliminating toxic chemical use, instituting process changes, raw material replacements, etc.

Implementation of Results: The permittee shall implement each waste reduction practice recommended by the WMA as soon as practicable. Any waste reduction practices which are identified but will not be implemented shall be described in the required Pollution Prevention plan summary or progress/update reports, along with the factors inhibiting their adoption. Any waste reduction practices which cannot be implemented immediately shall be described in the Pollution Prevention plan.

Timeframe: The permit issuing authority does not herein establish a time limit for completion of the WMA; the study may be conducted throughout the term of this permit. However, a suggested target completion date is **six months** after the effective date of the permit, so that the WMA results and recommended waste reduction practices may be incorporated into the BMP3 plan. Continual studies toward minimizing waste are encouraged.

Practices which reduce pollutant loading in wastewater or storm water discharges with a consequent increase in solid hazardous waste generation, decrease in air quality, or adverse affect to groundwater **shall not be considered waste reduction for the purposes of this assessment**.

6. Best Management Practices & Pollution Prevention Committee Recommended:

A Best Management Practices Committee (Comittee) should be established to direct or assist in the implementation of the BMP3 plan. The Committee should be comprised of individuals within the plant organization who are responsible for developing the BMP3 plan and assisting the plant manager in its implementation, monitoring of success, and revision. The activities and responsibilities of the Committee should address all aspects of the facility's BMP3 plan. The scope of responsibilities of the Committee should be described in the plan.

7. Employee Training

Employee training programs shall inform personnel at all levels of responsibility of the components & goals of the BMP3 plan and shall describe employee responsibilities for implementing the plan. Training shall address topics such as good housekeeping, materials management, recordkeeping & reporting, spill prevention & response, as well as specific waste reduction practices to be employed. Training should also disclose how individual employees may contribute suggestions concerning the BMP3 plan or suggestions regarding Pollution Prevention. The plan shall identify periodic dates for such training.

8. Plan Development & Implementation

The BMP3 plan shall be developed and implemented 6 months after the effective date of this permit, unless any later dates are specified by the Director. Any portion of the WMA which is ongoing at the time of development or implementation shall be described in the plan. Any waste reduction practice

which is recommended for implementation over a period of time shall be identified in the plan, including a schedule for its implementation.

9. Submission of Plan Summary & Progress/Update Reports

a. Plan Summary:

Not later than 2 years after the effective date of the permit, a summary of the BMP3 plan shall be developed and maintained at the facility and made available to the permit issuing authority upon request. The summary should include the following: a brief description of the plan, its implementation process, schedules for implementing identified waste reduction practices, and a list of all waste reduction practices being employed at the facility. The results of waste minimization assessment studies already completed as well as any scheduled or ongoing WMA studies shall be discussed.

b. Progress/Update Reports:

Annually thereafter for the duration of the permit progress/update reports documenting implementation of the plan shall be maintained at the facility and made available to the permit issuing authority upon request. The reports shall discuss whether or not implementation schedules were met and revise any schedules, as necessary. The plan shall also be updated as necessary and the attainment or progress made toward specific pollutant reduction targets documented. Results of any ongoing WMA studies as well as any additional schedules for implementation of wast reduction practices shall be included.

c. A timetable for the various plan requirements follows:

Timetable for BMP3 Plan Requirements:

REQUIREMENT	TIME FROM EFFECTIVE DATE OF THIS PERMIT
Complete WMA	6 months
Develop & Implement Plan	6 months
Develop Plan Summary	2 Years

Progress/Update Reports	3 years, and then annually thereafter

The permittee shall maintain the plan and subsequent reports at the facility and shall make the plan available to the Permit Issuing Authority upon request.

10. Plan Review & Modification

If following review by the Director, or authorized representative, the BMP3 plan is determined insufficient, he/she may notify the permittee that the BMP3 plan does not meet one or more of the minimum requirements of this Part. Upon such notification from the Director, or authorized representative, the permittee shall amend the plan and shall submit to the Director a written certification that the requested changes have been made. Unless otherwise provided by the Director, the permittee shall have 30 days after such notification to make the changes necessary.

The permittee shall modify the BMP3 plan whenever there is a change in design, construction, operation, or maintenance, which has a significant effect on the potential for the discharge of pollutants to waters of the United States or if the plan proves to be ineffective in achieving the general objectives of reducing pollutants in wastewater or storm water discharges. Modifications to the plan may be reviewed by EPA in the same manner as described above.

11. SPECIFIC CONDITIONS

These conditions will be incorporated according to Best Professional Judgement (BPJ) for specific areas in which standard conditions may not address.

B. REQUIRED COMPONENTS OF A WASTE MINIMIZATION ASSESSMENT

1. Plant Water Balance

The WMA shall include an overall plant water balance, as well as internal water balances, as necessary. This information shall be used to determine any opportunities for water conservation or reuse/recycling and to determine if and where leakages might occur.

2. Material and Risk Assessment

A materials & risk assessment shall be developed and shall include the following:

a. identification of the types & quantities of materials used or manufactured (including by-products produced) at the facility;

b. identification of the location & types of materials management activities which occur at the facility;

c. an evaluation of the following aspects of materials compatibility: containment & storage practices for chemicals, container compatibility, chemical mixing procedures; potential mixing or compatibility problems; and specific prohibitions regarding mixing of chemicals;

d. technical information on human health and ecological effects of toxic or hazardous chemicals presently used or manufactured (including by-products produced) or planned for future use or production;

e. analyses of chemical use & waste generation, including overall plant material balances and as necessary, internal process balances, for all pollutants. (When actual measurements of the quantity of a chemical entering a wastewater or storm water stream are not readily available, reasonable estimates should be made based on best engineering judgment.) The analyses shall address reasons for using particular chemicals, and measures or estimates of the actual and potential chemical discharges via wastewater, wastewater sludge, storm water, air, solid waste or hazardous waste media.

3. <u>Pollutant Reduction Methods</u>

The WMA shall include, at a minimum, the following means of reducing pollutant discharges in wastewater streams or of otherwise minimizing wastes:

a. process related source reduction measures, including any or all of the following, as appropriate:

1) production process changes;
2) improved process controls;
3) reduction of off-spec materials;
4) reduction in use of toxic or hazardous materials;
5) chemical modifications and/or material purification;
6) chemical substitution employing non-toxic or less toxic alternatives; and
7) equipment upgrades or modifications or changes in equipment use.

b. housekeeping/operational changes, including waste stream segregation, inventory control, spill & leak prevention, equipment maintenance; and employee training in areas of pollution prevention, good housekeeping, and spill prevention & response;

c. in-process recycling, on-site recycling and/or off-site recycling of materials;

d. following all source reduction & recycling practices, wastewater treatment process changes, including the use of new or improved treatment methods, such that treatment by-products are less toxic to aquatic or human life; and

e. other means as agreed upon by the permit issuing authority and the permittee.

4. Storm Water Evaluation

For storm water discharges and instances where storm water enters the wastewater treatment/disposal system or is otherwise commingled with wastewater, the WMA shall evaluate the following potential sources of storm water contamination, at a minimum:

a. loading, unloading and transfer areas for dry bulk materials or liquids;

b. outdoor storage of raw materials or products;

c. outdoor manufacturing or processing activities;

d. dust or particulate generating processes;

e. on-site waste and/or sludge disposal practices.

The likelihood of storm water contact in these areas and the potential for spills from these areas shall be considered in the evaluation. The history of significant leaks or spills of toxic or hazardous pollutants shall also be considered. Recommendations for changes to current practices which would reduce the potential for storm water contamination from these areas shall be made, as necessary.

UNITED STATES ENVIRONMENTAL PROTECTION AGENCY
REGION IV
345 COURTLAND STREET, N.E.
ATLANTA, GEORGIA 30365

JUL 07 1993

DRAFT

Statement of Basis

Application for National Pollutant Discharge Elimination System Permit to Discharge to Waters of the United States

NPDES No.: FL0004117

Facility Name: Cedar Bay Cogeneration Facility

Location: 9469 Eastport Road
Duval County
Jacksonville, Florida 32218

Receiving Stream: Broward River (freshwater)

Classification: Class III Waters

Use Designation: Recreation, Propagation and Maintenance of a Healthy, Well-Balanced Population of Fish and Wildlife

Permit Writer: Karrie-Jo Shell

Facility Description:

This facility is a coal-fired, steam electric generating facility (SIC Code 4911). This cogeneration facility is designed to provide up to 380,000 pounds per hour of process steam to an adjacent paper mill, as well as 250 megawatts (net) of electricity for revenue.

Wastewaters consist of storm water runoff from the material storage area (includes coal, ash, and limestone storage and handling areas) and runoff from the yard area (includes areas around the power block and cooling tower). Wastewaters are treated by sedimentation in two onsite retention ponds.

Bases for Permit Conditions:

Outfall 003
(Ground Runoff and, Roof & Yard Drain Discharges)

Flow and Total Suspended Solids: Monitoring and reporting requirements are based on best professional judgement (BPJ), and are consistent with Section 308(a) of the Clean Water Act of 1987 (CWA).

pH: Based on Florida Administrative Code (FAC) Section 17-302.560(32) (dated 1/5/93).

Printed on Recycled Paper

Visible Sheen: Based on BPJ, 40 CFR Section 122.44(d)(1)(i), and FAC Section 17-302.510(3)(k)2.

Floating Solids and Visible Foam: Based on BPJ, 40 CFR Section 122.44(d)(1)(i), and FAC Section 17-302.500(1)(b).

Outfall 008

Flow: Monitoring and reporting requirements are based on best professional judgement (BPJ), and are consistent with Section 308(a) of the Clean Water Act of 1987 (CWA).

Total Suspended Solids: Federal new source performance standards for the steam electric power generating point source category (40 CFR Part 423.15(k), November 19, 1982, 47 FR 52290)

pH: Based on FAC Section 17-302.560(32). The limits are also consistent with the new source performance standards for coal pile runoff cited at 40 CFR Section 423.15(a).

Visible Sheen: Based on BPJ, 40 CFR Section 122.44(d)(1)(i), and FAC Section 17-302.510(3)(k)2.

Floating Solids and Visible Foam: Based on BPJ, 40 CFR Section 122.44(d)(1)(i), and FAC Section 17-302.500(1)(b).

Proposed Schedule for Permit Issuance:

Draft Permit to Applicant	July 9, 1993
Draft to State for certification	July 30, 1993
Proposed Public Notice Date	August 19, 1993
Proposed Issuance Date	September 30, 1993
Proposed Effective Date	November 1, 1993

APPENDIX B

STATE OF FLORIDA'S FINAL ORDER APPROVING MODIFICATION OF CERTIFICATION SETTLEMENT AGREEMENT AND CONDITIONS OF CERTIFICATION

BEFORE THE GOVERNOR AND CABINET
STATE OF FLORIDA
SITTING AS THE SITING BOARD

IN RE: POWER PLANT SITE CERTIFICATION OF CEDAR BAY COGENERATION PROJECT, PA-88-24	DOAH Case No. 88-5740 OGC Case No. 88-1089

FINAL ORDER APPROVING MODIFICATION OF CERTIFICATION

On June 17, 1992, the Siting Board entered an Order Instituting Modification Proceedings with respect to the power plant site certification issued February 18, 1991, to AES Cedar Bay, Inc., and Seminole Kraft Corporation for the Cedar Bay Cogeneration Project in Jacksonville. The certification modification proceedings were docketed as DOAH Case No. 88-5740. On or about April 13, 1993, all parties to the modification proceedings before DOAH executed a Settlement Stipulation dated April 12, 1993, which resolved all disputed issues of fact and law among the parties. On April 14, 1993, a Joint Agreed Motion to Relinquish Jurisdiction based upon the Settlement Stipulation was filed by the Department on behalf of all parties. On April 28, 1993, the assigned DOAH Hearing Officer, Robert T. Benton II, entered an order relinquishing jurisdiction of the proceeding to the Board for the purpose of taking final agency action in the matter.

The Siting Board, having reviewed the terms of the Settlement Stipulation and otherwise having been fully advised as to this matter, concludes that the Stipulation effects an appropriate resolution of the controversy over the site certification for the

Cedar Bay Cogeneration Project. The Board believes that this resolution is consistent with the public interest and with the intent of the Board as expressed in its Order of June 17, 1992. The revised Conditions of Certification agreed to by all parties and attached as Appendix A implement the agreed modifications and improvements to the project and assure that construction and operation will comply with the non-procedural standards of the agencies of jurisdiction.

Accordingly, the Board ORDERS:

1. The certification for the Cedar Bay Cogeneration Project, PA 88-24, issued February 18, 1991, is MODIFIED. The Conditions of Certification contained in Appendix A shall henceforth apply to govern construction and operation of the Cedar Bay Cogeneration Project in accordance with Section 403.511, Florida Statutes (Supp. 1992).

2. The certification is further MODIFIED to reflect that the name of certificate holder AES Cedar Bay, Inc. has been changed to Cedar Bay Cogeneration, Inc.

Any party to this Order has the right to seek judicial review of the Order pursuant to Section 120.68, Florida Statutes (Supp. 1992) by filing a Notice of Appeal pursuant to Rule 9.110, Florida Rules of Appellate Procedure, with the Clerk of the Department of Environmental Regulation and Office of General Counsel, 2600 Blair Stone Road, Tallahassee, Florida 32399-2400; and by filing a copy of the Notice of Appeal, accompanied with the applicable filing fees, with the appropriate District Court of Appeal. The Notice of Appeal must be filed within 30 days

from the date this Order is filed with the Clerk of the Department of Environmental Regulation.

DONE AND ORDERED this 11th day of May, 1993, in Tallahassee, Florida, pursuant to the vote of the Governor and Cabinet, sitting as the Siting Board, at the duly constituted Cabinet meeting on May 11, 1993.

BY THE GOVERNOR AND CABINET,
SITTING AS THE SITING BOARD

Lawton Chiles, Governor

CERTIFICATE OF SERVICE

I DO HEREBY CERTIFY that a true and correct copy of the foregoing document has been sent by U.S. Mail or by Hand Delivery to the following listed persons:

Gary Sams, Esq.
Hopping Boyd Green & Sams
P O Box 6526
Tallahassee FL 32314

Terry Cole, Esq.
Scott Shirley, Esq.
Oertel Hoffman Fernandez & Cole
P O Box 6507
Tallahassee FL 32314-6507

Jim Antista, General Counsel
Florida Game & Fresh Water
Fish Commission
620 S Meridian Rd
Tallahassee FL 32399-1600

Lucky Osho, Esq.
Department of Community Affairs
2740 Centerview Dr
Tallahassee FL 32399-2100

Earl M. Barker, Esq.
Slott & Barker
334 East Duval St
Jacksonville, FL 32302

Lawrence N. Curtin, Esq.
Holland & Knight
P O Drawer 810
Tallahassee FL 32302

Gregory K. Radlinski, Esq.
City of Jacksonville
600 City Hall
220 E Bay St
Jacksonville FL 32202

M.B. Adelson, IV
Assistant General Counsel
Douglas Bldg MS-35
3900 Commonwealth Blvd
Tallahassee FL 32399-3000

Rob Vandiver, General Counsel
Mike Palecki, Chief
Bureau of Electric & Gas
Florida Public Service Comms
101 E Gaines St
Tallahassee FL 32399-0850

James A. Heard, Esq.
2902 Independent Sq
Jacksonville FL 32202

Lisa B. Cooper, Esq.
Margol & Pennington
76 Laura St
Jacksonville FL 32202

Nancy B. Barnard, Esq.
St Johns River Water
Management District
P O Box 1429
Palatka FL 32178-1429

this 13th day of May, 1993.

STATE OF FLORIDA DEPARTMENT
OF ENVIRONMENTAL REGULATION

R T Donelan, Jr.

RICHARD T. DONELAN, JR.
Assistant General Counsel

Twin Towers Office Bldg
2600 Blair Stone Rd
Tallahassee FL 32399-2400
Telephone: 904/488-9730

STATE OF FLORIDA
DIVISION OF ADMINISTRATIVE HEARINGS

AES CEDAR BAY, INC., and SEMINOLE KRAFT CORPORATION, Petitioners, vs. STATE OF FLORIDA DEPARTMENT OF ENVIRONMENTAL REGULATION, Respondent, and CITY OF JACKSONVILLE, DEPARTMENT OF COMMUNITY AFFAIRS, PUBLIC SERVICE COMMISSION, ST. JOHNS RIVER WATER MANAGEMENT DISTRICT, JACKSONVILLE ELECTRIC AUTHORITY, CHARLES W. BOSTWICK, WILLIAM C. BOSTWICK, BARNETT BANKS TRUST COMPANY, N.A., IMESON INTERNATIONAL PARK, INC., and INDUSTRIAL PARK DEVELOPMENT CORPORATION, CITIZENS COMMITTEE, INC., SIERRA CLUB, FLORIDA AUDUBON SOCIETY, THE DUVAL AUDUBON SOCIETY, INC., and STAFFORD CAMPBELL, Intervenors.	DOAH CASE NO. 88-5740

SETTLEMENT STIPULATION

The parties in this and related proceedings, Cedar Bay Cogeneration, Inc. ("CBC") (formerly known as AES Cedar Bay, Inc.), Seminole Kraft Corporation ("SK"), the Florida Department of Environmental Regulation ("DER"), St. Johns River Water Management District ("SJRWMD"), City of Jacksonville, the Citizens' Committee, Inc. (including all of its members, who are listed on Attachment A

hereto), William C. Bostwick, Sierra Club, Florida Audubon Society, The Duval Audubon Society, Inc., and Stafford Campbell, as indicated below by their signatures or the signatures of their counsel or representatives (collectively "the Parties"), enter into the following settlement stipulation and agreement (Agreement), which shall be binding on themselves and their members, principals, successors and assigns. Persons signing on behalf of a group, organization, or legal entity represent that they have all necessary power and authority to execute this agreement and to bind said group, organization, or legal entity and its members.

A. Purposes

1. The intent of this Agreement is to resolve fully and finally, and with prejudice, all disputes, issues or other matters arising in the above-styled proceeding and in all related permitting proceedings or appeals at the federal, state, regional and local levels arising out of, or related to, the certification of, the petition for modification of certification of, or the permitting of, the Cedar Bay Cogeneration Project ("CBCP" or "Project") and its construction and operation in a manner binding on the parties to this Agreement. This Agreement resolves all issues which were raised or could have been raised in this proceeding or any other proceeding, including but not limited to the issue of use of natural gas in the Project or the Project's satisfaction of federal, state, regional and local environmental or other regulations. The parties will not seek administrative or judicial review, or seek revocation of, any certification or permit

for the Project which is consistent with the terms of this Agreement. This Agreement neither waives nor expands the rights available to any Party under existing law to seek enforcement or any other remedy for violation of this Agreement, the conditions of certification, or any state or federal permit for facts occurring after the date of this Agreement.

2. Each Party hereby requests, intending to be bound by its individual execution of this Agreement, that the Florida Power Plant Siting Board (Siting Board) enter a Final Order Approving Modification of Site Certification that contains the Conditions of Certification attached hereto as Attachment B and the provisions of this Agreement contained in Paragraphs 3 through 6 inclusive. All other provisions of this Agreement which are not included in the modified certification or other related permit shall be independently binding on the parties hereto. Furthermore, the parties agree that the findings implicit and explicit in this document establish that, if operated in compliance with the certification and applicable permits, the CBCP as now proposed plus the package boilers now proposed by SKC fully satisfy the Florida Electrical Power Plant Siting Act, all applicable federal, state, regional and local environmental requirements, and the Siting Board's Order Initiating Modification Proceedings, dated June 17, 1992, and are associated with, "[o]n balance," fewer "environmental impacts" than are associated with the SKC recycling operation without the CBCP as now proposed.

B. Conditions of Certification

3. A revised Condition of Certification No. XXVIII shall be included in the Conditions of Certification as contained in Attachment C hereto.

4. An additional condition of certification No. II.A.8.c. shall be included in the Conditions of Certification, as follows:

> Compliance tests shall be performed for mercury (Hg), beryllium (Be), and lead (Pb) until three consecutive tests (including, if successful, the initial compliance test) are within the annual emission limits specified in Condition II.A.3. above. Such tests shall occur, as necessary, in the first, fifth and tenth years and additional successive five year intervals following commercial operation of the Project.

5. Revised Conditions of Certification No. II.A.6 and II.A.9. to address the use of Continuous Emissions Monitors for determining compliance with emissions limits for sulfur dioxide, nitrogen oxides, carbon monoxide and opacity shall be included in the Conditions of Certification, as follows:

> 6. Compliance with the emission limits shall be determined by EPA reference method tests included in the July 1, 1992 version of 40 CFR Parts 60 and 61, Rule 17-297, F.A.C., and listed in Condition No. II.A.8 of this permit or by equivalent methods after prior written DEP approval. In addition, compliance with the emission limitations in Condition No. II.A.3 for CO, NO_x, and SO_2 and with the opacity requirements in Condition No.II.A.5 shall be determined with the Continuous Emission Monitoring Systems (CEMs) identified in Condition No. II.A.9.
>
> 9. CBCP shall install, certify, calibrate, operate, and maintain continuous emission monitoring systems for opacity, SO_2, NO_x, CO, and O_2 or CO_2, pursuant to all applicable requirements of Rule 17-296.800, F.A.C., Chapter 17-297, F.A.C., 40 CFR 60 Subpart A, 40 CFR 60 Subpart Da, 40 CFR 60 Appendix B, and 40 CFR 60 Appendix F. These CEMs shall be used to determine compliance with the emission limitations in Condition No. II.A.3 for CO, NO_x, and SO_2 and with the opacity

requirements in Condition No. II.A.5. The permittee may elect to install, certify, calibrate, operate, and maintain multiple span continuous emission monitoring systems for sulfur dioxide and nitrogen oxides providing certification tests and calibrations are performed for each span. Each of the continuous emission monitoring systems for sulfur dioxide and nitrogen oxides shall continuously record data on a span that satisfies the requirements of 40 CFR 60.47a. Any exception to the above must be specifically authorized by DEP in writing and in accordance with state and federal regulations.

6. Revised Conditions of Certification II.D. and II.E. to address Seminole Kraft Corporation's annual emissions from its new package boilers and actions to dismantle or render inoperable SK's existing power and bark boilers following surrender of the air permits for those boilers shall be included in the Conditions of Certification as follows:

D. Contemporaneous Emission Reductions

This certification and any individual air permits issued subsequent to the final order of the Board certifying the power plant site under section 403.509, F.S., shall require that the following Seminole Kraft Corporation sources be permanently shut down and made incapable of operation, and shall turn in their operation permits to the Division of Air Resources Management's Bureau of Air Regulation, within 30 days of written confirmation by DER of the successful completion of the initial compliance tests on the CBCP boilers: the No. 1 PB (power boiler), the No. 2 PB, the No. 3 PB, the No. 1 BB (bark boiler), and the No. 2 BB. RESD shall be specifically informed in writing within thirty days after each individual shut down of the above referenced equipment. Within one year of surrender of operating permits as provided above, SK shall have completed the following steps to ensure compliance with this condition:

Remove all oil guns;

Remove motors and selected conveyor parts in wood feed system for bark boilers;

Dismantle stacks;

Disconnect boiler feedwater pumps;

Sever fuel line connections; and

Remove fan motors.

These sources shall not, under any circumstances, be restarted, refurbished or re-permitted as new or existing sources, at the SK or CBCP site.

This requirement shall operate as a joint and individual requirement to assure common control for purpose of ensuring that all commitments relied on are in fact fulfilled.

E. SK Steam Boiler Emissions

1. This certification and any individual air permits issued by the Department subsequent to the final order of the Board certifying the power plant site under Section 403.509, Florida Statutes, shall incorporate the following limitations on the total tonnage of the specified criteria pollutants allowed to be emitted annually by any natural gas-fired boiler or combination of boilers constructed and operated by SK to provide up to 375,000 lbs/hr. of steam for use in its recycled paper process:

Tons	Per Year
CO	553
NO_x	310
SO_2	25, except as provided in E.2 below.

2. In the event that the ceiling for SO2 is expected to be exceeded due to unavailability of natural gas caused by factors beyond the control of SK, SK may notify the Department that it must exceed the ceiling as provided herein; and emissions of SO2 during the period of such curtailment shall not be counted against the yearly emissions ceiling of 25 tons unless administrative proceedings result in a finding that the exceedance was within Seminole Kraft's control. In no event shall the annual emissions of SO2 from the steam boilers referenced above exceed a ceiling of 41 tons per year.

3. The notice shall include a statement of reasons for the request and supporting documentation, and shall be published by SK, without supporting documents, in a newspaper of general circulation in Jacksonville as defined in section 403.5115(2), Florida Statutes. The filing and publication of the notice no later than 7 days following the date of exceedance shall preclude any finding of violation by DER until final disposition of any administrative proceedings.

C. Other Environmental Provisions

7. As an incentive to achieve lower sulfur dioxide emissions than permitted under the Conditions of Certification, CBC shall pay

annually to the City of Jacksonville, Land Acquisition Trust Fund, $400 for each ton of sulfur dioxide emitted in excess of 2208 tons per calendar year from the CBCP's three circulating fluidized bed boilers, combined, up to the total annual permitted sulfur dioxide emissions for the Project; provided, however, that any taxes, charges or fees payable under an applicable regulatory program on account of emissions above 2208 tons per year but below the maximum permitted annual emissions shall be deducted from the $400 per ton payable under this provision. The annual sulfur dioxide emissions from the CBCP's CFB boilers for purposes of this provision shall be determined based on continuous emissions monitoring data for the calendar year. The amount of any such payments due for a calendar year shall be determined by March 1st of the following year and be paid to the City of Jacksonville, Land Acquisition Trust Fund, by May 1st. Any annual emissions of sulfur dioxide above 2208 TPY but below the maximum permitted annual emissions shall not constitute a violation of the Conditions of Certification or of this Agreement.

8. As an incentive to achieve lower nitrogen oxide emissions than permitted under the Conditions of Certification, CBC shall pay annually to the City of Jacksonville, Land Acquisition Trust Fund, $200 for each ton of nitrogen oxides emitted in excess of 1948 tons per calendar year from the CBCP's three circulating fluidized bed boilers, combined, up to the total annual permitted nitrogen oxide emissions for the Project; provided, however, that any taxes, charges or fees payable under an applicable regulatory program on

account of emissions above 1948 tons per year but below the maximum permitted annual emissions shall be deducted from the $200 per ton payable under this provision. The annual nitrogen oxide emissions from the CBCP's CFB boilers for purposes of this provision shall be determined based on continuous emissions monitoring data for the calendar year. The amount of any such payments due for a calendar year shall be determined by March 1st of the following year and be paid to the City of Jacksonville, Land Acquisition Trust Fund, by May 1st. Any annual emissions of nitrogen oxides above 1948 TPY but below the maximum permitted annual emissions shall not constitute a violation of the Conditions of Certification or of this Agreement.

9. CBC agrees to donate to the City of Jacksonville the sum of $575,000 within 30 days after commencement of commercial operation. Of this sum, $350,000 shall be earmarked for construction of a new fire station east of the rail line in the vicinity of the intersection of Main St. and Busch Dr. to improve response times for emergency vehicles to reach the residential areas near the Project site. The other $225,000 shall be earmarked for the purchase of one (1) mobile air quality monitoring van, for use by the City of Jacksonville Department of Regulatory and Environmental Services to monitor ambient air for concentrations of non-criteria pollutants. The City of Jacksonville shall use its best efforts to acquire such an air quality monitoring van for a purchase price less than $225,000. If the City is successful in

acquiring such a van for less than $225,000, the remaining funds shall be applied toward the construction of the new fire station.

10. CBC agrees to provide onsite and offsite improvements to mitigate impacts across the Broward River from noise and light created by the Project. Such improvements shall be done in accordance with the landscape plan for the Project as approved by the City of Jacksonville on April 2, 1993. During the first three years of commercial operation, CBC, after consultation with the Citizens' Committee, Inc., will provide further mitigation for noise and light impacts by providing additional onsite or offsite improvements including improvements to the CBCP, which are intended to reduce such impacts; however, no such further improvements and related services,including consulting fees,shall exceed a total cost of $120,000. Any such improvements to the Project shall not occur if such mitigation would cause any adverse impacts to, including filling of, wetlands; require adverse modifications of the stormwater management system or ponds; or cause a violation of the conditions of certification, applicable law or the City of Jacksonville's landscape ordinance.

11. The Project shall be constructed in conformance with the conceptual Site Plan attached hereto as Attachment D. This site plan represents the facilities that are currently to be constructed and operated pursuant to the Site Certification, as modified pursuant to these proceedings and this Agreement, and the locations of those facilities. Any future modifications to this Site Plan shall be made in accordance with applicable law and regulations.

12. The parties agree that CBC will not be required to pursue a federal National Pollutant Discharge Elimination System (NPDES) or other permit for a surface water discharge permit for any Phase II water treatment system as referenced in the Siting Board's Order Instituting Modification Proceedings, dated June 17, 1992. No such Phase II water treatment system is proposed and any prior proposal has been withdrawn in favor of the CBCP's zero discharge system.

13. The parties hereto agree not to oppose the issuance of any NPDES permit for the Project for the discharge of storm water or runoff caused by extreme rainfall events from the yard area and storage area runoff ponds as shown on Attachment D, provided that the proposed discharge is consistent with the data previously submitted on or about April 4, 1993 to DER, SJRWMD, and the City of Jacksonville in support of the Petition for Modification of Certification. For purposes of this agreement, an extreme rainfall event is defined as 1) a 50 year/24 hour storm for runoff from the storage area; 2) a 22 year/24 hour storm for runoff from the yard area when the CBCP turbine generator is operating; or 3) a 12 year/24 hour storm for runoff from the yard area when the CBCP turbine generator is not operating.

14. The parties agree that there is no basis to require the preparation or completion of an environmental impact statement (EIS) for the Project and that the parties will not request that such an EIS be completed or prepared.

15. Any proposal to plant trees as an offset of carbon dioxide emissions from the Project, as proposed by a previous owner

of the stock of CBC, is satisfied by the improvements made pursuant to the modified conditions of certification and this Agreement.

16. Seminole Kraft stipulates that the issuance of the original certification for the CBCP consumed all creditable emissions resulting from the shutdown of Seminole Kraft's existing bark and power boilers. Any creditable emissions resulting from the shutdown of the kraft recovery boilers, lime kilns, smelt dissolving tanks and slaker No. 3 shall be determined as provided in Rule 17-212.400(a), F.A.C. and any permit issued for SK's three proposed package boilers; but SK acknowledges that no creditable emissions remain for sulfur dioxide.

17. The Project and the Seminole Kraft recycling mill are independent sources of air emissions. Accordingly, neither shall be entitled to receive further air emission credits or offsets based upon the operating performance of the other below its air emission limits established in the attached Conditions of Certification or any air permit nor shall there be enforcement taken against one of these parties for violations of legal requirements by the other of these two parties.

D. Other Provisions

18. With respect to the first public announcement of this settlement agreement, the timing and wording of the first release of this Agreement will be reserved to the City of Jacksonville, the Sierra Club, Audubon Societies, Stafford Campbell and the Citizens' Committee, after consultation on such timing and wording with representatives of CBC and Seminole Kraft. Nothing released is to

be derogatory of any party to this Agreement, nor inconsistent with the terms of this Agreement. Subsequent releases may be made by any party to this Agreement at its option, but in all instances shall be consistent with the terms of this Agreement.

19. The Parties agree to cooperate in obtaining final action by the Siting Board on the proposed modification as expeditiously as possible. The Parties agree that any presentation which they may make to the Hearing Officer and the Siting Board shall be consistent with the terms, provisions and spirit of this Agreement and with the modified conditions of certification. The parties further agree to consult with one another in advance of the meeting of the Siting Board concerning any presentation they may make to the Board.

20. The Citizens' Committee Inc., Sierra Club, Florida Audubon Society, Duval Audubon Society, and Stafford Campbell agree to return no later than April 30, 1993 to counsel for CBC and SK, respectively, all copies of all documents which are subject to any confidentiality agreement in this case.

21. Within 30 days following final action by the Siting Board approving the modifications of site certification, CBC will state in writing to the United States Environmental Protection Agency that it will operate the Project in compliance with Section II of the Conditions of Certification attached hereto and Paragraph 5 of this Agreement as though those provisions were incorporated into the existing air permit for the Project and accepts them as

federally enforceable. CBC will contemporaneously provide a copy of this letter to the other Parties to this Agreement.

22. As an element of this Agreement, CBC has provided the Certificate attached as Attachment E.

23. All Parties waive any right to appeal, to challenge or to take other judicial or administrative action to oppose, in any forum available, the issuance of a final revised air permit for the Project which contains permit conditions that are substantially equivalent to the Conditions of Certification contained in Section II of the conditions of certification in Attachment B hereto and the additional provisions of Paragraph 5 herein. The Parties reserve and do not waive the right to challenge or otherwise oppose any final revised air permit for the Project that contains conditions substantially different from those addressed by section II of the conditions of certification and Paragraph 5 of this Agreement.

24. This agreement may be executed in multiple counterparts.

WHEREFORE, the parties hereto signify their ratification of this Settlement Stipulation by affixing their signatures hereto:

Stafford Campbell

Date: 4/13/93

Citizens' Committee, Inc.

By: Barbara Broward
Barbara Broward, President
Date: 4/13/93

Cedar Bay Cogeneration, Inc.

By: Gary P. Sams, Attorney

Date: 4/12/93

City of Jacksonville

By: ED AUSTIN

Its: MAYOR
Date: April 14, 1993

Seminole Kraft Corporation

By: Scott Shirley, Attorney

Date: 4/12/95

Sierra Club, Florida Audubon Society, The Duval Audubon Society, Inc.

By: James R. Heard
James Heard, Attorney
Date: 4/13/93

Florida Department of Environmental Regulation

By: Richard T. Donelan
Richard T. Donelan
Assistant General Counsel

Date: 12 April 93

St. Johns River Water Management District

By: Nancy B. Barnard
Assistant General Counsel

Its: Assistant General Counsel
Date: 13 April 93

Charles W. Bostwick

Date: 13th April 1993

B-18

The Estate of William C. Bostwick and Barnett Banks Trust Company, N.A.

By: _____
Charles W. Bostwick

Date: 13th April 1993

SETTLEMENT STIPULATION

ATTACHMENT A

ALL MEMBERS OF CITIZENS' COMMITTEE

ATTACHMENT A

STATE OF FLORIDA
DIVISION OF ADMINISTRATIVE HEARINGS

AES CEDAR BAY, INC. and SEMINOLE KRAFT CORPORATION,

Petitioners.

vs.

DEPARTMENT OF ENVIRONMENTAL REGULATION,

Respondent,

and

CITY OF JACKSONVILLE, DEPARTMENT OF COMMUNITY AFFAIRS, PUBLIC SERVICE COMMISSION, ST. JOHNS RIVER WATER MANAGEMENT DISTRICT, JACKSONVILLE ELECTRIC AUTHORITY, CHARLES W. BOSTWICK, WILLIAM C. BOSTWICK, BARNETT BANKS TRUST COMPANY, N.A., IMESON INTERNATIONAL PARK, INC., INDUSTRIAL PARK DEVELOPMENT CORPORATION, CITIZENS COMMITTEE, INC., SIERRA CLUB, FLORIDA AUDUBON SOCIETY, THE DUVAL AUDUBON SOCIETY, INC. and STAFFORD CAMPBELL,

Intervenors.

CASE NO. 88-5740

AFFIDAVIT OF LISA BARCLAY COOPER

Before me, the undersigned authority, personally appeared Lisa Barclay Cooper, who, being first duly sworn, deposes and says:

1. I am counsel of record for intervenor The Citizens' Committee, Inc., in the above-styled action. Following is a true and complete list of the members of The Citizens' Committee, Inc.:

MARGOL & PENNINGTON, P.A. • ATTORNEYS AT LAW • SUITE 1700 AMERICAN HERITAGE TOWER • 76 SOUTH LAURA STREET • JACKSONVILLE, FLORIDA 32202 • (904) 356-7308 • FAX (904) 356-1836

B-21

1. Barbara Broward, President
2. Jack B. Lee, Vice President
3. Charles. L. Daniels, Vice President
4. William C. Val Bostwick, Jr., Secretary
5. Dorothy D. Mathias, Treasurer

FURTHER, THE AFFIANT SAYETH NOT.

LBA Cooper
LISA BARCLAY COOPER

Sworn to and subscribed before me
this 12th day of April, 1993.

Margaret A.Z. Stanley
Signature of Notary Public

Margaret A. Z. Stanley
Name of Notary (Typed, Printed or Stamped)

Commission Number (If not legible on seal):

My Commission Expires (If not legible on seal):

NOTARY PUBLIC, STATE OF FLORIDA
My commission expires Aug. 30, 1993
Bonded thru Patterson - Becht Agency

MARGOL & PENNINGTON, P.A. • ATTORNEYS AT LAW • SUITE 1700 AMERICAN HERITAGE TOWER • 75 SOUTH LAURA STREET • JACKSONVILLE, FLORIDA 32202 • (904) 355-7500 • FAX (904) 355-1605

B-22

SETTLEMENT STIPULATION

ATTACHMENT B

CONDITIONS OF CERTIFICATION
APRIL 7, 1993

(These Conditions of Certification, which have been updated, are not included here. They are available on request from Heinz Mueller, Chief, Environmental Policy Section; FAB-4; U.S. EPA Region IV; 345 Courtland Street, NE; Atlanta, GA 30365)

CB 66.5.1

State of Florida Department of Environmental Protection
CBCP/Seminole Kraft Corp.
Cedar Bay Cogeneration Project
PA 88-24A

(Revised 4/12/93)

CONDITIONS OF CERTIFICATION

TABLE OF CONTENTS

		PAGE NO.
I.	GENERAL	1
II.	AIR	1
	A. Emission Limitations for CBCP Boilers	1
	1. Fluidized Bed Coal Fired Boilers (CFB)	1
	2. Coal Fired Boiler Controls	3
	3. Flue Gas Emissions	3
	4. Ammonia (NH) Slip from Exhaust Gases	4
	5. Visible Emissions	4
	6. Compliance with permit limits	4
	7. CFB subject	4
	8. Compliance Tests	4
	9. Continuous Emission Monitoring	5
	10. Operations Monitoring	6
	11. Reporting for each CFB	6
	12. Submitting Changes for Approval	7
	13. All Records of Documentation File Minimum Years	7
	14. Permittee Subject to Provisions of Rule 17-210.700	7
	15. Permittee Subject to Provisions of Rule 17-210.650	7
	16. Permittee Subject to Provisions of Rule 17-4.160	7
	B. CBCP Material Handling and Treatment	8
	C. Requirements for the Permittees	10
	D. Contemporaneous Emission Reductions	11
	E. SK Steam Boiler Emissions	12
III.	WATER DISCHARGES	13
	A. Plant Effluents and Receiving Body of Water	13
	1. Discharge of Cooling System	13
	2. Zero Discharge Plan	13
	3. Receiving Body of Water	13
	4. Point of Discharge	13
	5. Chemical Wastes from CBCP	13
	6. SKC Shut Down Through Cooling System	13
	7. Storm Water Runoff	14
	8. Sanitary Wastes	15
	B. Water Monitoring Programs	15

IV.	GROUND WATER	17
	A. Water Well Construction Permit	17
	B. Well Criteria, Tagging and Operating Plan	17
	C. Maximum Annual Withdrawals	18
	D. Water Use Transfer	18
	E. Emergency Shortages	18
	F. Monitoring and Reporting	18
	G. Ground Water Monitoring Requirements	20
	H. Leachate	21
	I. Water Use Audit	22
	J. Water Conservation Awareness Program	22
V.	CONTROL MEASURES DURING CONSTRUCTION	23
	A. Storm Water Runoff	23
	B. Sanitary Wastes	23
	C. Environmental Control Program	23
	D. Construction Dewatering Effluent	24
VI.	SAFETY	24
VII.	SCREENING	24
VIII.	TOXIC, DELETERIOUS, OR HAZARDOUS MATERIALS	24
IX.	SOLID WASTE STORAGE AND DISPOSAL	24
X.	CHANGE IN DISCHARGE	25
XI.	NONCOMPLIANCE NOTIFICATION	26
XII.	FACILITIES OPERATION	26
XIII.	ADVERSE IMPACT	26
XIV.	RIGHT OF ENTRY	26
XV.	REVOCATION OR SUSPENSION	27
XVI.	CIVIL AND CRIMINAL LIABILITY	27
XVII.	PROPERTY RIGHTS	27
XVIII.	SEVERABILITY	27
XVIV.	DEFINITIONS	28
XX.	REVIEW OF SITE CERTIFICATION	28
XXI.	MODIFICATION OF CONDITIONS	28
XXII.	FLOOD CONTROL PROTECTION	28
XXIII.	EFFECT OF CERTIFICATION	29

XXIV.	NOISE	29
XXV.	USE OF WATER FOR COOLING PURPOSES	29
XXVI.	ENFORCEMENT	30
XXVII.	ENDANGERED AND THREATENED SPECIES	30
XXVIII.	ENVIRONMENTALLY SENSITIVE LAND ACQUISITION	30
XXIX.	TRANSFER OF CERTIFICATION	35

STATE OF FLORIDA DEPARTMENT OF ENVIRONMENTAL PROTECTION
CEDAR BAY COGENERATION, INC./SEMINOLE KRAFT CORP.
CEDAR BAY COGENERATION PROJECT
PA 88-24A

CONDITIONS OF CERTIFICATION

When a condition is intended to refer to both Cedar Bay Cogeneration, Inc. (CBC) and Seminole Kraft Corp., the term "CBC/SK" or "permittees" will be used. When a condition is intended to refer to the "Cedar Bay Cogeneration Project" the terms "Cedar Bay Cogeneration Project", "CBCP", or "Project" will be used.

Where a condition applies only to Cedar Bay Cogeneration, Inc. the term Cedar Bay Cogeneration, Inc."(CBC) or the term "permittee," where it is clear that "CBC" is the intended responsible party, will be used. Similarly, where a condition applies only to Seminole Kraft Corp., the term "Seminole Kraft Corp." or the abbreviation "SK" or the term "permittee," where it is clear that SK is the intended responsible party, will be used. The Department of Environmental Protection may be referred to as DEP or the Department. RESD represents the City of Jacksonville, Regulatory and Environmental Services Department. SJRWMD represents the St. Johns River Water Management District.

I. GENERAL

The construction and operation of CBCP shall be in accordance with all applicable provisions of at least the following regulations of the Department: Chapters 17-210 through 17-297, 17-302, 17-4, 17-256 (Opening Burning), 17-601, 17-702, 17-312, 17-532, 17-550, 17-555, 17-25, 17-610, 17-660, and 17-772, Florida Administrative Code (F.A.C.) or their successors as they are renumbered.

II. AIR

The construction and operation of CBCP shall be in accordance with all applicable provisions of Chapters 17-210 through 17-297, F.A.C. In addition to the foregoing, CBCP shall comply with the following conditions of certification as indicated.

A. Emission Limitations for CBCP Boilers

1. Fluidized Bed Coal Fired Boilers (CFB)

a. The maximum coal charging rate of each CFB shall neither exceed 104,000 lbs/hr., 39,000 tons per month (30 consecutive days), nor 390,000 tons per year (TPY). This reflects a combined total of 312,000 lbs/hr., 117,000 tons per month, and 1,170,000 TPY for all three CFBs.

b. The maximum charging rate to each of two CFBs of short fiber recycle rejects from the SK recycling process shall not exceed 210 yd^3/day wet and 69,588 yd^3/yr wet. This reflects a combined total of 420 yd^3/day wet and 139,176 yd^3/yr wet for the two CFBs that fire recycle rejects. The third CFB will not utilize recycle rejects, nor will it be equipped with handling and firing equipment for recycle rejects.

c. The maximum heat input to each CFB shall not exceed 1063 MMBtu/hr. This reflects a combined total of 3189 MMBtu/hr. for all three units.

d. The sulfur content of the coal shall not exceed 1.2% by weight on an annual basis. The sulfur content shall not exceed 1.7% by weight on a shipment (train load) basis.

e. Auxiliary fuel burners shall be fueled only with No. 2 fuel oil with a maximum sulfur content of 0.05% by weight. The fuel oil shall normally only be used for startups. During commercial operation the maximum annual oil usage shall not exceed 1,900,000 gals./year. The maximum heat input from the fuel oil shall not exceed 380 MMBtu/hr. for each of the CFBs.

f. The CFBs shall be fueled only with the fuels permitted in Conditions II.A.1a, 1b, and 1e above. Other fuels or wastes shall not be burned without prior specific written approval of the Secretary of DEP pursuant to condition XXI, Modification of Conditions.

g. The CFBs may operate continuously, i.e., 8760 hrs/yr, but shall not exceed 25.98 x 10^6 MMBtu/yr total annual heat input.

h. To the extent that it is consistent with Condition II.A.1b. and the following, CBCP shall burn all of the short fiber rejects generated by Seminole Kraft in processing recycled paper. No less than ninety (90) days prior to completion of construction, CBCP shall submit a plan to DEP for conducting a 30-day test burn within one year after initial compliance testing. That test burn shall be designed to ascertain whether the CFBs can burn the rejects as supplemental fuel without exceeding any of the limitations on emissions and fuel usage contained in Condition II.A. and without causing any operational problems which would affect the reliable operation (with customary maintenance) of the CFBs and without violating any other environmental requirements. CBCP shall notify DEP and the Regulatory and Environmental Services Department (RESD) at least thirty (30) days prior to initiation of the test burn. The results of the test burn and CBCP's analysis shall be reported to DEP and to the RESD within forty-five (45) days of completion of the test burn. DEP shall notify CBCP within thirty (30) days thereafter of its approval or disapproval of any conclusion by CBCP that the test burn demonstrated that the rejects can be burned in compliance with this Condition of Certification.

B-29

2. Coal Fired Boiler Controls

The emissions from each CFB shall be controlled using the following systems:

a. Limestone injection and fuel sulfur limitations, for control of sulfur dioxide and acid gases.

b. Baghouse, for control of particulate matter.

c. CBCP shall conduct a test to determine whether substantial additional removal of mercury can be obtained through a carbon injection system for mercury removal, as described in Exhibit 74 of the administrative record for the Lee County Resource Recovery Facility, which feeds carbon reagent into the CFB exhaust stream prior to the baghouse. Within one hundred eighty (180) days after initial compliance testing, CBCP shall conduct a test on one CFB to compare mercury emissions to the atmosphere with and without carbon injection. The test program will include the testing of carbon injection between the boiler and the fabric filter. Carbon forms to be tested may include activated carbon with or without additives and pulverized coal with or without additives. After consultation with the DEP, RESD, and EPRI, CBC shall submit a mercury control test protocol to DEP for approval by December 1, 1993. Results of the test shall be submitted to the DEP within 90 days of completion.

d. Selective Non-catalytic Reduction (SNCR) for control of NOx.

e. Good combustion characteristics, which are an inherent part of the CFB technology, for control of carbon monoxide and volatile organic compounds.

3. Flue gas emissions from each CFB shall not exceed the following:

		Emission Limitations		
Pollutant	lbs/MMBtu	lbs/hr.	TPY	TPY for 3 CFBs
CO	0.175 [1]	186 [1]	758	2273
NOx	0.17 [2]	180.7 [2]	736.1	2208
SO_2	0.24 [3]	255.1 [3]	--	--
	0.20 [4]	--	866	2598
VOC	0.015	16.0	65	195
PM	0.018	19.1	78	234
PM_{10}	0.018	19.1	78	234
H2S04 mist	4.66e-04	0.50	2.0	6.1
Fluorides	7.44e-04	0.79	3.2	9.7
Lead	6.03e-05	0.06	0.26	0.78
Mercury	2.89e-05	0.03	0.13	0.38
Beryllium	8.70e-06	0.01	0.04	0.11

[Note: TPY represents a 93% capacity factor.]

(1) Eight-hour rolling average, except for initial and annual compliance tests and the CEM certification, when 1-hour standard applies.
(2) Thirty-day rolling average.
(3) Three-hour rolling average.
(4) Twelve-Month rolling average (MRA).

4. Ammonia (NH_3) slip from exhaust gases shall not exceed 10 ppmvd when burning coal at 100% capacity and 30 ppmvd when burning oil.

5. Visible emissions (VE) shall not exceed 20% opacity (6 min. average), except for one 6 minute period per hour when VE shall not exceed 27% opacity pursuant to 40 CFR 60.42a.

6. Compliance with the emission limits shall be determined by EPA reference method tests included in the July 1, 1992 version of 40 CFR Parts 60 and 61, Rule 17-297, F.A.C., and listed in Condition No. II.A.8 of this permit or by equivalent methods after prior written DEP approval. In addition, compliance with the emission limitations in Condition No. II.A.3 for CO, NOX and SO_2 and with the opacity requirements in Condition No. II.A.5 shall be determined with the Continuous Emission Monitoring Systems (CEMs) identified in Condition No. II.A.9.

7. The CFBs are subject to 40 CFR Part 60, Subparts A and Da; except that where requirements within this certification are more restrictive, the requirements of this certification shall apply.

8. Compliance Tests for each CFB

a. Initial and subsequent compliance tests for PM/PM_{10}, SO_2, NOx, CO, VOC, lead, fluorides, ammonia, mercury, beryllium and H_2SO_4 mist shall be conducted in accordance with 40 CFR 60.8 (a), (b), (c), (d), (e), and (f).

b. Annual compliance tests shall be performed for PM, CO, SO_2 and NOx, commencing no later than 12 months from the initial test.

c. Compliance tests shall be performed for mercury (Hg), beryllium (Be), and lead (Pb) until three consecutive tests (including, if successful, the initial compliance test) are within the annual emission limits specified in Condition II.A.3. above. Such tests shall occur, as necessary, in the first, fifth and tenth years and additional successive five year intervals following commercial operation of the Project.

d. Initial and annual visible emissions compliance tests shall be determined in accordance with 40 CFR 60.11(b) and (e).

e. The compliance tests shall be conducted between 90-100% of the maximum licensed capacity and firing rate for each permitted fuel.

B-31

f. The following test methods and procedures of Rule 17-297, F.A.C., and 40 CFR Parts 60 and 61 or other DEP approved methods with prior DEP approval, in writing, shall be used for compliance testing:

(1) Method 1 for selection of sample site and sample traverses.

(2) Method 2 for determining stack gas flow rate.

(3) Method 3 or 3A for gas analysis for calculation of percent O_2 and CO_2.

(4) Method 4 for determining stack gas moisture content to convert the flow rate from actual standard cubic feet to dry standard cubic feet.

(5) Method 5 or Method 17 for particulate matter.

(6) Method 6, 6C, or 8 for SO_2.

(7) Method 7, 7A, 7B, 7C, 7D, or 7E for nitrogen oxides.

(8) Method 8 for sulfuric acid mist.

(9) Method 9 for visible emissions, in accordance with 40 CFR 60.11 and Appendix A.

(10) Method 10 for CO.

(11) Method 12 for lead.

(12) Method 13A or 13B for fluorides.

(13) Method 19 for sulphur dioxide removal efficiency pursuant to 40 CFR 60.48a.

(14) Method 18 or 25 for VOCs.

(15) Method 101A or EPA Method 29 for mercury.

(16) Method 104 for beryllium.

(17) Method 201 or 201A for PM10 emissions.

(18) Ammonia (NH_3) Method to be determined by the Department.

9. Continuous Emission Monitoring for each CFB

CBCP shall install, certify, calibrate, operate, and maintain continuous emission monitoring systems for opacity, SO_2, NO_x, CO, and O_2 or CO_2, pursuant to all applicable requirements of Rule 17-296.800, F.A.C., Chapter 17-297, F.A.C., 40 CFR 60 Subpart A, 40 CFR 60 Subpart Da, 40 CFR 60 Appendix B, and 40 CFR 60 Appendix F. These CEMS shall be used to determine compliance with the emission limitations in Condition No. II.A.3 for CO, NOX, and SO_2 and with

B-32

the opacity requirements in Condition No. II.A.5. The permittee may elect to install, certify, calibrate, operate, and maintain multiple span continuous emission monitoring systems for sulfur dioxide and nitrogen oxides providing certification tests and calibrations are performed for each span. Each of the continuous emission monitoring systems for sulfur dioxide and nitrogen oxides shall continuously record data on a span that satisfies the requirements of 40 CFR 60.47a. Any exception to the above must be specifically authorized by DEP in writing and in accordance with state and federal regulations.

a. CEMS data shall be recorded and reported in accordance with Chapter 17-297, F.A.C., and 40 CFR 60.49a and 60.7. A record shall be kept for periods of startup, shutdown and malfunction.

b. A malfunction means any sudden and unavoidable failure of air pollution control equipment or process equipment or of a process to operate in a normal or usual manner. Failures that are caused entirely or in part by poor maintenance, careless operation or any other preventable upset condition or preventable equipment breakdown shall not be considered malfunctions.

c. The procedures under 40 CFR 60.13 shall be followed for installation, evaluation and operation of all CEMS.

d. Opacity monitoring system data shall be reduced to 6-minute averages, based on 36 or more data points, and gaseous CEMS data shall be reduced to 1-hour averages, based on 4 or more data points, in accordance with 40 CFR 60.13(h).

e. For purposes of reports required under this certification, excess emissions are defined as any calculated average emission concentration, as determined pursuant to Condition No. II.A.11 herein, which exceeds the applicable emission limit in Condition No. II.A.3.

f. The permittee is subject to all applicable provisions of Rule 17-4.130, Plant Operation-Problems.

10. Operations Monitoring for each CFB

a. Devices shall be installed to continuously monitor and record steam production, and flue gas temperature at the exit of the control equipment.

b. All coal and No. 2 fuel oil usage shall be recorded on a 24-hr (daily) basis for each CFB. Recycle rejects usage on a volumetric basis shall be estimated and recorded for each 24-hour period in which rejects are burned.

11. Reporting for each CFB

a. A minimum of thirty (30) days prior written notification of compliance testing shall be given to DEP's N.E. District office and to the RESD office, in accordance with 40 CFR 60.8.

B-33

b. In accordance with Rule 17-297.570, F.A.C., the results of compliance test shall be submitted to the RESD office within 45 days after completion of the last test run.

c. The owner or operator shall submit excess emission reports to RESD, in accordance with Rule 17-210.700, F.A.C., and 40 CFR 60.7(c) and (d). The reports shall include the following:

(1) The magnitude of excess emissions computed in accordance with 40 CFR 60.13(h), any conversion factors used, and the date and time of commencement and completion of each period of excess emissions (40 CFR 60.7(c)(1)).

(2) Specific identification of each period of excess emissions that occurs during startups, shutdowns, and malfunctions of the furnace boiler system. The nature and cause of any malfunction (if known) and the corrective action taken or preventive measures adopted (40 CFR 60.7(c)(2)).

(3) The date and time identifying each period during which the continuous monitoring system was inoperative except for zero and span checks, and the nature of the system repairs or adjustments (40 CFR 60.7(c)(3)).

(4) When no excess emissions have occurred or the continuous monitoring system has not been inoperative, repaired, or adjusted, such information shall be stated in the report (40 CFR 60.7(c)(4)).

(5) The owner or operator shall maintain a file of all measurements, including continuous monitoring systems performance evaluations; monitoring systems or monitoring device calibration; checks; adjustments and maintenance performed on these systems or devices; and all other information required by this permit recorded in a permanent form suitable for inspection (40 CFR 60.7(e)).

d. Annual and quarterly reports shall be submitted to RESD as per Rule 297.500, F.A.C.

12. Any change in the method of operation, fuels utilized, equipment, or operating hours or any other changes pursuant to Rule 17-212.200, F.A.C., defining modification, shall be submitted for approval to DEP's Bureau of Air Regulation.

13. All records of documentation shall be kept on file for a minimum of 3 years pursuant to Rule 17-4.160(4), F.A.C.

14. The permittee is subject to all applicable provisions of Rule 17-210.700, F.A.C., Excess Emissions.

15. The permittee is subject to all applicable provisions of Rule 17-210.650, F.A.C., Circumvention.

16. The permittee is subject to all applicable provisions of Rule 17-4.160, F.A.C., Permit Conditions.

B-34

B. CBCP - Material Handling and Treatment

1. The material handling and treatment operations including coal and limestone unloading buildings, coal and limestone reclaim hoppers, coal crusher house, limestone dryer, fly and bed ash silos, ash pelletizer, pellet curing silo, coal and limestone day silos, conveyors, storage areas and related equipment, may be operated continuously, i.e. 8760 hrs/yr, except that the limestone crushers/dryers may be operated for a maximum of 11 hours per day (maximum of 2920 hrs/yr) at maximum capacity.

2. The material handling/usage rates for coal, limestone, fly ash, and bed ash shall not exceed the following:

Material	Handling/Usage Rate TPM	TPY
Coal	117,000	1,170,000
Limestone	27,000	320,000
Fly Ash	28,000	336,000
Bed Ash	8,000	88,000

Note: TPM is tons per month based on 30 consecutive days, TPY is tons per year.

3. The VOC emissions from the maximum No. 2 fuel oil utilization rate of 240 gals/hr., and 700,800 gals/year for the limestone dryers; and 8000 gals/hr., and 1,900,000 gals/year for the three boilers are not expected to be significant.

4. Material handling sources shall be regulated as follows:

a. The material handling and treatment area sources with either fabric filter or baghouse controls are as follows:

Coal Crusher Building
Coal Silo Conveyor
Limestone Pulverizer/Conveyor
Limestone Storage Bin
Bed Ash Hopper
Bed Ash Silo
Fly Ash Silo
Bed Ash Bin
Fly Ash Bin
Pellet Vibratory Screen
Pelletizing Ash Recycle Tank
Pelletizing Recycle Hopper
Cured Pellet Recycle Conveyor
Pellet Recycle Conveyor

The emissions from the above listed sources are subject to the particulate emission limitation requirement of 0.003 gr/dscf (applicant requested limitation which is more stringent than what is allowed by Rule 17.296.711, F.A.C.). Since these sources are RACT standard type, then a one-time verification test on each

source shall be required for PM mass emissions to demonstrate that the baghouse control systems can achieve the 0.003 gr/dscf. The performance tests shall be conducted using EPA Method 5 pursuant to Rule 17-297, F.A.C.,and 40 CFR 60, Appendix A (July, 1991 version).

b. The PM emissions from the following process, equipment, and/or facility in the material handling and treatment area sources shall be controlled using wet suppression/removal techniques as follows:

Coal Car Unloading
Ash Pellet Hydrator
Ash Pellet Curing Silo
Ash Pelletizing Pan

The above listed sources are subject to a visible emission (VE) and a particulate matter (PM) emission limitation requirement of 5% opacity and 0.01 gr/dscf (applicant requested limitation, which is more stringent than what is allowed by rule), respectively, in accordance with Rule 17-296.711, F.A.C. Initial and subsequent compliance tests shall be conducted for VE and PM using EPA 9 and 5, respectively, in accordance with Rule 17-297, F.A.C., and 40 CFR 60, Appendix A (July, 1991 version).

5. Visible Emissions (VE) shall not exceed 5% opacity from any source in the material handling and treatment area listed in Condition II. B.4., in accordance with Rule 17-296.711(2)(a), F.A.C. After the compliance tests have been performed, neither DEP nor RESD will require particulate matter mass tests in accordance with EPA Method 5 unless the VE limit of 5% opacity is exceeded for a given source, or unless DEP or RESD, based on other information, has reason to believe the particulate emission limits are being violated in accordance with Rule 17-297.620(4), F.A.C.

6. All sources subject to visible emissions and particulate matter mass emissions performance tests shall conduct them concurrently, except where inclement weather interferes.

7. The maximum emissions from each of the limestone dryers while using oil shall not exceed the following (based on AP-42 factors, Table 1, 3-1, Industrial Distillate, 10/86):

	Estimated Limitations		
Pollutant	lbs/hr.	TPY	TPY for 2 dryers
PM/PM_{10}	0.24	0.32	0.64
SO_2	0.85	1.15	2.3
CO	0.60	0.81	1.62
NOx	2.40	3.25	6.5
VOC	0.05	0.06	0.12

Visible emissions from the dryers shall not exceed 5% opacity.

8. The maximum sulfur content of No. 2 fuel oil shall not exceed 0.05% by weight. The maximum firing rate of No. 2 fuel oil for each limestone dryer shall not exceed 120 gals/hr., or

B-36

350,400 gals/year. This reflects a combined total fuel oil firing rate of 240 gals/hr., and 700,800 gals/year, for the two dryers.

9. Initial and annual PM and Visible Emission compliance tests for all the emission points in the material handling and treatment area, including but not limited to the sources specified in this permit, shall be conducted in accordance with the July 1, 1991 version of 40 CFR 60, Appendix A, using EPA Methods 5 and 9, respectively.

10. Compliance test reports shall be submitted to RESD within 45 days of test completion in accordance with Rule 17-297.570 of the F.A.C.

11. Any changes in the method of operation, raw materials processed, equipment, or operating hours or any other changes pursuant to F.A.C. Rule 17-212.200, defining modification, shall be submitted for approval to DEP's Bureau of Air Regulation (BAR).

C. Requirements For the Permittees

1. Beginning one month after certification, CBCP shall submit to RESD and DEP's BAR, a quarterly status report briefly outlining progress made on engineering design and purchase of major equipment, including copies of technical data pertaining to the selected emission control devices. These data should include, but not be limited to, guaranteed efficiency and emission rates, and major design parameters such as air/cloth ratio and flow rate. The Department may, upon review of these data, disapprove the use of any such device. Such disapproval shall be issued within 30 days of receipt of the technical data.

2. CBCP shall report any delays in construction and completion of the project which would delay commercial operation by more than 90 days to the RESD office.

3. Reasonable precautions to prevent fugitive particulate emissions during construction, such as coating of roads and construction sites used by contractors, regrassing or watering areas of disturbed soils, will be taken by CBCP. CBCP is subject to all applicable provisions of Rule 17-296.310(3), F.A.C., Unconfined Emissions of Particulate Matter.

4. Fuel shall not be burned in any CBCP unit unless the control devices are operating properly, pursuant to 40 CFR Part 60 Subpart Da.

5. The maximum sulfur content of the No. 2 fuel oil utilized in the CFBs and the two unit limestone dryers shall not exceed 0.05 percent by weight. Samples shall be taken of each fuel oil shipment received and shall be analyzed for sulfur content and heating value. Records of the analyses shall be kept a minimum of three years to be available for DEP and RESD inspection.

B-37

6. Coal fired in the CFBs shall have a sulfur content not to exceed 1.7 percent by weight on a shipment (train load) basis. Coal sulfur content shall be determined and recorded in accordance with 40 CFR 60.47a.

7. CBC shall maintain a daily log of the amounts and types of fuel used and copies of fuel analyses containing information on sulfur content and heating values.

8. CBCP shall provide stack sampling facilities as required by Rule 17-297.345 F.A.C. ?

9. Prior to commercial operation of each source, the permittee shall submit to the BAR a standardized plan or procedure that will allow that permittee to monitor emission control equipment efficiency and enable the permittee to return malfunctioning equipment to proper operation as expeditiously as possible.

10. All CBCP records of documentation shall be kept on file for a minimum of three years pursuant to Rule 17-4.160(14), F.A.C.

D. Contemporaneous Emission Reductions

This certification and any individual air permits issued subsequent to the final order of the Board certifying the power plant site under 403.509, F.S., shall require, that the following Seminole Kraft Corporation sources be permanently shut down and made incapable of operation, and shall turn in their operation permits to the Division of Air Resources Management's Bureau of Air Regulation, within 30 days of written confirmation by DEP of the successful completion of the initial compliance tests on the CBCP boilers: the No. 1 PB (power boiler), the No. 2 PB, the No. 3 PB, the No. 1 BB (bark boiler),and the No. 2 BB. RESD shall be specifically informed in writing within thirty days after each individual shut down of the above referenced equipment. Within one year of surrender of operating permits as provided above, SK shall have completed the following steps to ensure compliance with this condition:

Remove all oil guns
Remove motors and selected conveyor parts in wood feed system for bark boilers
Dismantle stacks
Disconnect boiler feedwater pumps
Sever fuel line connections
Remove fan motors

These sources shall not, under any circumstances, be restarted, refurbished or re-permitted as new or existing sources, at the SK or CBCP site.

This requirement shall operate as a joint and individual requirement to assure common control for purpose of ensuring that all commitments relied on are in fact fulfilled.

B-38

E. SK Steam Boiler Emissions

1. This certification and any individual air permits issued by the Department subsequent to the final order of the Board certifying the power plant site under Section 403.509, F.S., shall incorporate the following limitations on the total tonnage of the specified criteria pollutants allowed to be emitted annually by any natural gas-fired boiler or combination of boilers constructed and operated by SK to provide up to 375,000 lbs/hr of steam for use in its recycled paper process:

	Tons Per Year
CO	553
NO_x	310
SO_2	25, except as provided in (2) below

2. In the event that the ceiling for SO_2 is expected to be exceeded due to unavailability of natural gas caused by factors beyond the control of SK, SK may notify the Department that it must exceed the ceiling as provided herein; and emissions of SO_2 during the period of such curtailment shall not be counted against the yearly emissions ceiling of 25 tons unless administrative proceedings result in a finding that the exceedance was within Seminole Kraft's control. In no event shall the annual emissions of SO_2 from the steam boilers referenced above exceed a ceiling of 41 tons per year.

3. The notice shall include a statement or reasons for the request and supporting documentation, and shall be published by SK, without supporting documents, in a newspaper of general circulation in Jacksonville, as defined in Section 403.5115(2), F.S. The filing and publication of the notice no later than 7 days following the date of exceedance, shall preclude any finding of violation by DEP until final disposition of any administrative proceedings.

B-39

III. WATER DISCHARGES

Any discharges into any waters of the State during construction and operation of CBCP shall be in accordance with all applicable provisions of Chapters 17-301, 17-302 and 17-660, F.A.C., and 40 CFR, Part 423, Effluent Guidelines and Standards for Steam Electric Power Generating Point Source Category, except as provided herein. Also, CBCP shall comply with the following conditions of certification:

A. Plant Effluents and Receiving Body of Water

For discharges made from the CBCP power plant site the following conditions shall apply:

1. CBCP shall not discharge any cooling system, demineralizer regeneration, floor drainage or other process wastewaters from the operation of the CBCP facility into any waters of the State. CBCP shall install a closed-loop cooling water system in accordance with technical specifications set forth in the Zero Discharge System Plan submitted by CBCP to the Department.

2. Pursuant to the Zero Discharge Plan, CBCP shall make available to Seminole Kraft up to 500 gpm of reclaimed water that has been treated to a quality satisfactory for use in Seminole Kraft's cooling tower.

3. Receiving Body of Water - The receiving bodies of water for storm water discharges have been determined by the Department to be those waters of the St. John's River (during construction only) or the Broward River and any other waters affected which are considered to be waters of the State within the definition of Chapter 403, Florida Statutes (F.S.).

4. Point of Discharge (POD) - The point of discharge has been determined by the Department to be where the storm water effluent physically enters the waters of the State in the St. John's River (during construction) via Outfall OSN 001 and Broward River (during construction and operation) via Outfall OSN 003 and OSN 008.

5. Chemical Wastes from CBCP - All low volume wastes (demineralizer regeneration, floor drainage, labs drains, and similar wastes) and chemical metal cleaning wastes shall be collected and treated in the the zero discharge treatment system or disposed of off-site.

6. Seminole Kraft Corporation (SKC) shall shut down the mill's once through cooling system within 10 days after written notification by DEP of the successful completion of the initial compliance tests on the CBCP boilers conducted pursuant to Condition II.A.7. SKC shall inform the DEP Northeast District Office of the shutdown and surrender all applicable operating permits for that facility within 21 days of such notification.

B-40

7. Storm Water Runoff

a. Construction - During construction there shall be no discharges from the stormwater basins for storms less than the ten-year, twenty four-hour storm event. Any discharge from the storm water runoff collection system from a storm event less than the once in ten year, twenty-four hour storm shall meet the following limits and shall be monitored at OSNs 003 and 008 by a grab sample once per discharge, but not more often than once per week:

Effluent Characteristic	Discharge Limits Instantaneous Maximum
Flow (MGD)	Report
TSS (mg/l)	50
pH	6.0-9.0

All applicable discharge limitations, described in Part I of the NPDES permit (FL0041173) for stormwater discharges during the period of construction from this facility, shall apply under this permit and be reported to the Department as part of the Monthly Operation Report.

b. Operation

1. Yard Area Runoff - During normal plant operation, necessary measures shall be used to settle, filter, treat or absorb silt-containing or pollutant-laden storm water runoff to limit the suspended solids to 50 mg/l or less at OSN 003 during rainfall periods greater than the 22-year, 24-hour rainfall. During periods of operation when the CBCP is off-line, these necessary measures, as specified above, shall be used during rainfall periods greater than a 12-year, 24-hour storm. The discharge shall comply with all the monitoring requirements for Yard Area Runoff specified in Part I of NPDES Permit FL0041173 for this facility.

2. Storage Area Runoff - During operation there shall be no discharges from the stormwater basins for storms less than the fifty-year, twenty four-hour storm event. Any discharge from the storm water runoff collection system from a storm event less than the once in 50 year, twenty-four hour storm shall meet the limits in 7.a. above and shall be monitored at OSN 008 by a grab sample once per discharge, but not more often than once per week. The discharge shall comply with all the monitoring requirements for the Coal, Limestone, and Ash Storage Area specified in Part I of NPDES Permit FL0041173 for this facility.

c. Control measures shall consist at the minimum of filters,sediment traps, barriers, berms or vegetative planting. Exposed or disturbed soil shall be protected as soon as possible to minimize silt, and sediment-laden runoff. The pH shall be kept within the range of 6.0 to 9.0 in the discharge to the St. Johns River and 6.5 to 8.5 in the Broward River.

B-41

d. Special consideration must be given to the control of sediment laden runoff resulting from storm events during the construction phase. Best management practices erosion controls should be installed early during the construction period so as to prevent the transport of sediment into surface waters which could result in water quality violations and Departmental enforcement action. Revegetation and stabilization of disturbed areas should be accomplished as soon as possible to reduce the potential for further soil erosion. Should construction phase runoff pose a threat to the water quality of state waters, additional measures such as treatment of impounded runoff or by the use of turbidity curtains (screens) in on-site impoundments shall be immediately implemented with any releases to state waters to be controlled.

e. It is necessary that there be an entity responsible for maintenance of the system pursuant to Section 17-25.027, F.A.C.

f. Correctional action or modification of the system will be necessary should mosquito problems occur.

g. CBC shall submit to DEP with copy to RESD and the SJRWMD, erosion control plans for the entire construction project (or discrete phases of the project) detailing measures to be taken to prevent the offsite discharge of turbid waters during construction. These plans must also be provided to the construction contractor prior to the initiation of construction.

h. All swale and retention basin side slopes shall be seeded and mulched or sodded within thirty days following their completion and a substantial vegetative cover must be established within ninety days of seeding.

8. Sanitary wastes from CBCP shall be collected and routed for treatment to the SKC domestic wastewater treatment plant.

B. Water Monitoring Programs

1. Necessity and extent of continuation of monitoring programs may be modified in accordance with Condition No. XXI, Modification of Conditions.

2. Chemical Stormwater Monitoring - The parameters described in Condition III.A. shall be monitored during discharge as described in condition III A. commencing with the start of construction or operation of the CFBs and reported quarterly to the Northeast District Office.

3. Coal, Ash, and Limestone Storage Areas

a. Runoff from the coal pile, ash and lime stone storage areas shall be retained on-site during normal operations up to the 50-year, 24-hour storm event. Monitoring

B-42

of metals, such as iron, copper, zinc, mercury silver, and aluminum, shall be done once a month during any month when a discharge occurs at OSNs 003 or 008.

b. Stormwater from the storage area runoff pond shall be sampled the first time each month there is a discharge to the cooling tower pretreatment system under the operating conditions approved herein. Samples shall be taken for 12 separate months and analyses performed as specified in Condition 5 below.

4. The ground water levels shall be monitored continuously at selected wells as approved by the SJRWMD. Chemical analyses shall be made on samples from all monitored wells identified in Condition IV.F. and IV.G. below. The location, frequency and selected chemical analyses shall be as given in Condition IV.F and IV.G. The ground water monitoring program shall be implemented at least one year prior to commercial operation of the CFBs. The chemical analyses shall be in accord with the latest edition of Standard Methods for the Analysis of Water and Wastewater. The data shall be submitted within 30 days of collection/analysis to the SJRWMD.

5. The reclaimed water transferred to Seminole Kraft for cooling tower make-up water shall be monitored for the following parameters:

Flow (gallons per minute)	Continuous/Flow Meter
pH (standard units)	Weekly/Meter or Grab
Iron (mg/L)	Monthly/Grab
Total Copper (ug/L)	Monthly/Grab
Zinc (mg/L)	Monthly/Grab
Mercury (ug/L)	Monthly/Grab
Silver (ug/L)	Monthly/Grab
Aluminum (mg/L)	Monthly/Grab
Cadmium (ug/L)	Monthly/Grab
Arsenic (ug/L)	Monthly/Grab
Antimony (mg/L)	Monthly/Grab

B-43

IV. GROUND WATER

A. Water Well Construction Permit

Prior to the construction, modification, or abandonment of a production well for the SK paper mill, Seminole Kraft must obtain a Water Well Construction Permit from the SJRWMD pursuant to Chapter 40C-3, F.A.C. Construction, modification, or abandonment of a production well will require modification of the SK consumptive use permit when such construction, modification or abandonment is other than that specified and described on SK's consumptive use permit application form. The construction, modification, or abandonment of a monitor well specified in Condition IV.H. will require the prior approval of the Department. All monitor wells intended for use over thirty days must be noticed to RESD prior to construction or change of status from temporary to permanent.

B. Well Criteria, Tagging and Wellfield Operating Plan

Leaking or inoperative well casings, valves, or controls must be repaired or replaced by SK as required to eliminate the leak or make the system fully operational. Failure to make such repairs will be cause for deeming the well abandoned in accordance with Chapter 17.21.02(5), F.A.C., Chapter 373.309, Florida Statutes and Chapter 366.301 (b), and .307 (a), Jacksonville ordinance Code. Wells deemed abandoned will require plugging according to state and local regulations.

A SJRWMD-issued identification tag must be prominently displayed by SK at each SK withdrawal site by permanently affixing such tag to the pump, headgate, valve or other withdrawal facility as provided by Section 40C-2.401, Florida Administrative Code. The SK must notify the SJRWMD in the event that a replacement tag is needed.

SK must develop and implement a Wellfield Operating Program within six (6) months after construction of wells or start-up of the CBCP. This program must describe which wells are primary, secondary, and standby (reserve); the order of preference for using the wells; criteria for shutting down and restarting wells; describe CBCP and SKC responsibilities in the operation of the well field, and any other aspects of well field management operation, such as who the well field operator is and any other aspects of wellfield management operation. This program must be submitted to the SJRWMD and a copy to RESD within six (6) months of certification and receive SJRWMD approval before the wells may be used to supply water for the Cedar Bay Cogeneration plant.

B-44

C. Maximum Annual Withdrawals

CBCP's maximum annual use from the Floridan aquifer may not exceed 530.7 million gallons. Maximum daily use from the Floridan aquifer for the CBCP may not exceed 1.45 million gallons. The use of potable water from the Floridan aquifer for cooling purposes is prohibited. The use of potable water from the Floridan aquifer for control of fugitive dust emissions is prohibited when alternative water sources are available, such as treated wastewater, shallow aquifer wells or stormwater. The use of Floridan aquifer potable water for the sole purpose of waste stream dilution is prohibited.

D. Water Use Transfer

The SJRWMD must be notified, in writing, within 90 days of the transfer of this certification. All transfers are subject to the provisions of Section 40C-2.351, F.A.C., which state that all terms and conditions of the permit shall be binding of the transferee.

E. Emergency Shortages

Nothing in this certification is to be construed to limit the authority of the SJRWMD to declare a water shortage and issue orders pursuant to Section 373.175, Florida Statutes, or to formulate a plan for implementation during periods of water shortage, pursuant to Section 373.246, Florida Statutes. In the event a water shortage, is declared by the District Governing Board, the CBCP shall adhere to water shortage restrictions as specified by SJRWMD to the extent the restrictions apply to all other similar users.

F. Monitoring and Reporting

1.a. The permittee shall maintain records of total daily use by the CBCP on a monthly basis for each year ending on December 31st. These records shall be submitted to the SJRWMD on Form EN-3 by January 31st of each year.

b. Prior to beginning water usage, all points where water is delivered from the SKC water supply or wastewater system for use at CBCP must be equipped with totalizing flow meters. Such meters must maintain a 95% accuracy, be verifiable and be installed according to the manufacturer's specifications.

c. CBCP must maintain the required flow meter(s). In case of failure or breakdown of any meter or other flow measuring device, the SJRWMD must be notified in writing within 5 days of its discovery. A defective meter must be repaired or replaced within 30 days of its discovery.

B-45

d. Total withdrawals from each monitored source must be recorded continuously, totalled monthly, and reported to the SJRWMD at least every six months from the initiation of the monitoring using SJRWMD Form No. EN-50.

e. CBCP must have all flow meters checked for accuracy once every 3 years within 30 days of the anniversary date of commencement of operation of the CBCP, and recalibrated if the difference between the actual flow and the meter reading is greater than 5%. SJRWMD Form No. EN-51 must be submitted to the SJRWMD within 10 days of meter inspection and calibration.

2. Water quality samples shall be taken by SK in May and October of each year from each SK production well. The samples shall be analyzed by a DEP certified laboratory for the following parameters:

Magnesium	Sulfate
Sodium	Carbonate
Potassium	Bi-Carbonate (or alkalinity if pH is 6.9 or lower)
Chloride	Calcium

All major ion analyses shall be checked for anion/cation balance and must balance within 5 percent prior to submission. It is recommended that duplicates be taken to allow for laboratory problems or loss. The sample analyses shall be submitted to the SJRWMD by May 30 and October 30 of each year.

3. Legal uses of water existing at the time of certification application may not be significantly adversely impacted by the consumptive use for the CBCP. If unanticipated significant adverse impacts occur, the consumptive use shall be subject to modification in whole or in part to curtail or abate the adverse impacts, unless the impacts can be mitigated by CBCP.

4. Off-site land uses existing at the time of certification application may not be significantly adversely impacted as a result of the consumptive use for the CBCP. If unanticipated significant adverse impacts occur, the consumptive use shall be subject to revocation or modification in whole or in part to curtail or abate the adverse impacts, unless the impacts can be mitigated by CBCP.

5. During the seventh year following issuance of this certification order, CBCP shall submit a report to SJRWMD, DEP, and RESD demonstrating compliance with these conditions of certification, Chapter 373, Florida Statutes, and the Rules of SJRWMD and DEP, applicable to the consumptive use of water. Compliance shall be demonstrated with rules and statutory provisions in effect at that time.

B-46

SJRWMD shall evaluate the report and notify DEP in a report of any issues regarding compliance with this certification and applicable rules and statutory provisions, including whether the consumptive use of water for the CBCP complies with those provisions of Chapter 272, Florida Statutes, and DEP's and SJRWMD's rules applicable to its consumptive use and whether any conditions of certification must be amended, added or deleted in order to insure that the referenced rules and statutory provisions are complied with. SJRWMD shall respond within 30 days of receipt of CBCP's report as to whether or not it contains information sufficient to make a determination as to compliance with the referenced rules and statutory provisions. Thereafter, DEP shall notify CBCP and RESD within ninety (90) days after DEP's determination that CBCP's report is sufficient. Section 40C-1.610, F.A.C., shall apply. An opportunity for hearing pursuant to Section 120.57, Florida Statutes, shall be afforded any party. In any hearing requested pursuant to this condition of certification, the burden of demonstrating compliance shall be on CBCP. The continued consumptive use of water for the CBCP shall be dependent upon CBCP demonstrating and presenting sufficient data to establish that its consumptive use meets the referenced rules or statutory provisions. The Board hereby delegates to the Secretary the authority to enter final orders regarding this condition in the event an administrative hearing is requested.

G. Ground Water Monitoring Requirements

After consultation with the DEP, RESD, and SJRWMD, CBCP shall install a monitoring well network to monitor ground water quality horizontally and vertically through the aquifer above the Hawthorn Formation. Ground water quantity and flow directions will be determined seasonally at the site through the preparation of seasonal water table contour maps, based upon water level data obtained during the applicant's preoperational monitoring program. From these maps and the results of the detailed subsurface investigation of site stratigraphy, the water quality monitoring well network will be located. A ground water monitoring plan that meets the requirements of Section 17-522.600(3), F.A.C., shall be submitted to the Department's Northeast District Office for review. Approval or disapproval of the ground water monitoring plan shall be given within 60 days of receipt. Ground water monitoring shall be required at CBCP's pelletized ash storage area, each sedimentation pond, and each coal pile storage area, and SK's new lime mud storage area. Insofar as possible, the monitoring wells may be selected from the existing wells and piezometers used in the permittees preoperational monitoring program, provided that the wells construction will not preclude their use. Existing wells will be properly sealed in accordance with Chapter 17-532, F.A.C., whenever they are abandoned due to construction of facilities. The water samples collected from each of the monitor wells shall be collected immediately after removal by pumping of a quantity of water

B-47

equal to at least three casing volumes. The water quality analyses shall be performed monthly during the year prior to commercial operation and quarterly thereafter. No sampling or analysis is to be initiated until receipt of written approval of a site-specific quality assurance project plan (QAPP by the Department. Results shall be submitted to the RESD and the DEP NE District by the fifteenth (15th) day of the month following the month during which such analyses were performed prior to commercial operation, or by the 30th day of the month following the calendar quarter such analyses were performed after start of commercial operation. Testing for the following constituents is required around unlined ponds or storage areas:

TDS	Cadmium
Conductance	Zinc
pH	Copper
Redox	Nickel
Sulfate	Selenium
Sulfite	Chromium
Color	Arsenic
Chloride	Beryllium
Iron	Mercury
Aluminum	Lead
	Gross Alpha

Conductivity shall be monitored in wells around all lined solid waste disposal sites, coal piles, and wastewater treatment and sedimentation ponds.

H. Leachate

1. Zone of Discharge

Leachate from CBCP's coal storage piles, SK's lime mud storage area or CBCP's sedimentation ponds shall not cause or contribute to contamination of waters of the State (including both surface and ground waters) in excess of the limitations of Chapter 17-302, and 17-520, F.A.C., beyond the boundary of a zone of discharge extending to the top of the Hawthorn Formation below the waste landfill cell or pond rising to a depth of 50 feet at a horizontal distance of 200 feet from the edge of the storage pile, landfill or ponds, or rising to the boundary of the site, as appropriate.

B-48

2. Corrective Action

When the ground water monitoring system shows a potential for this facility to cause or contribute to a violation of the ground water quality standards of Chapter 17-520, F.A.C., at the boundary of the zone of discharge, the appropriate ponds or coal pile shall be bottom sealed, relocated, or the operation of the affected facility shall be altered in such a manner as to assure the Department that no violation of the ground water standards will occur beyond the boundary of the zone of discharge.

I. Water Use Audit

At the end of the second year of production withdrawals, CBCP must have conducted an audit of the amount of water used in the various operational processes, landscaping practices and domestic facilities. If the audit results indicate losses of water due to leakage, a leak detection analysis must be conducted and submitted to the SJRWMD and a leak repair program must be implemented.

J. Water Conservation Awareness Program

Prior to beginning water usage, CBCP must implement and submit to the SJRWMD an employee awareness program (including such measures as posting signs regarding water conservation and reporting leaks) concerning water conservation.

V. CONTROL MEASURES DURING CONSTRUCTION

A. Storm Water Runoff

During construction, appropriate measures shall be used to settle, filter, treat or absorb silt-containing or pollutant- laden storm water runoff to limit the total suspended solids to 50 mg/l or less and pH to 6.0 to 9.0 at OSN 003 during rainfall events that are lesser in intensity than the 10-year, 24-hour rainfall, and to prevent an increase in turbidity of more than 29 NTU above background in waters of the State.

Control measures shall consist at the minimum of sediment traps, barriers, berms or vegetative planting. Exposed or disturbed soil shall be protected as soon as possible to minimize silt- and sediment-laden runoff. The pH shall be kept within the range of 6.0 to 9.0 at OSN.003. Stormwater drainage to the Broward River shall be monitored as indicated below:

Monitoring Point	Parameters	Frequency	Sample Type
*Storm water drainage to the Broward River from the runoff treatment pond	BOD5, TOC, suspended solids, turbidity, dissolved oxygen, pH, TKN, Total phosphorus, Fecal Coliform, Total Coliform	**	**
	Oil and grease	**	**

*Monitoring shall be conducted at suitable points for allowing a comparison of the characteristics of preconstruction and construction phase drainage and receiving waters.

**The frequency and sample type shall be as outlined in a sampling program prepared by the applicant and submitted at least ninety days prior to start of construction for review and approval by the DEP Northeast District Office. The District Office will furnish copies of the sampling program to the RESD and SJRWMD and shall indicate approval or disapproval within 60 days of submittal.

B. Sanitary Wastes

Disposal of sanitary wastes from construction toilet facilities shall be in accordance with applicable regulations of the Department and the RESD.

C. Environmental Control Program

CBCP shall establish an environmental control program under the supervision of a qualified person to assure that all construction activities conform to good environmental

B-50

practices and the applicable conditions of certification. A written plan for controlling pollution during construction shall be submitted to DEP and RESD within sixty days of issuance of the Certification. The plan shall identify and describe all pollutants and waste generated during construction and the methods for control, treatment and disposal. CBCP shall notify the Department's Northeast District Office and RESD by telephone within 24 hours if possible if unexpected harmful effects or evidence of irreversible environmental damage are detected by it during construction, shall immediately report in writing to the Department, and shall within two weeks provide an analysis of the problem and a plan to eliminate or significantly reduce the harmful effects or damage and a plan to prevent reoccurrence.

D. Construction Dewatering Effluent

There shall be no discharge of construction dewatering effluent.

VI. SAFETY

The overall design, layout, and operation of the facilities shall be such as to minimize hazards to humans and the environment. Security control measures shall be utilized to prevent exposure of the public to hazardous conditions. The Federal Occupational Safety and Health Standards will be complied with during construction and operation. The Safety Standards specified under Section 440.56, F.S., by the Industrial Safety Section of the Florida Department of Commerce will also be complied with.

VII. SCREENING

The CBCP shall provide screening of the site to the extent feasible through the use of aesthetically acceptable structures, vegetated earthen walls and/or existing or planted vegetation.

VIII. TOXIC, DELETERIOUS, OR HAZARDOUS MATERIALS

The spill of any toxic, deleterious, or hazardous materials shall be reported in the manner specified by Condition XI, Noncompliance Notification.

IX. SOLID WASTE STORAGE AND DISPOSAL

CBCP shall be responsible for arranging for the proper storage, handling, disposal, or reuse of any solid waste generated by the CBCP facility. Solid waste produced by the operation of the CBCP facility shall be removed from site and disposed of in a permitted disposal facility, with the exception of bottom ash and fly ash. Bottom ash and fly ash will be pelletized, or made into aggregate form, and either

shipped back to the mine utilizing the trains to deliver the coal, or sold as an additive to concrete, or utilized by companies specializing in the marketing and utilization of combustion by-products. The bottom ash and fly ash shall not be disposed of in a landfill within Duval County. If the CBCP decides to dispose of the bottom ash or fly ash by other than returning it to the mine, they shall notify RESD and DEP. Prior to removal and disposal of spent lime mud and pond tailings, the CBCP shall determine whether those wastes are hazardous under 40 CFR 26 and 17-730, F.A.C. If wastes are determined to be hazardous, they shall be disposed of in accordance with Chapter 17-730, F.A.C., after consultation with the DEP and RESD. If not hazardous, disposal shall be to a landfill designed to ensure compliance with groundwater quality criteria as contained in Chapters 17-3, and 17-730 F.A.C. All solid wastes disposed of on site shall comply with the provisions of Chapter 17-701, F.A.C. Ground water monitoring in accordance with 17-4, and 17-520, F.A.C. shall be implemented at the lime mud disposal site.

At least ninety (90) days prior to disposal or use of any sludge generated by pretreatment of reclaimed Seminole Kraft wastewater or zero wastewater discharge system, CBCP shall report to DEP and RESD concerning the chemical characterization of any such sludge. DEP reserves the right to require additional sampling and analysis as necessary to ensure that the above-cited regulations are complied with. Prior to any such sludge disposal, CBCP shall obtain a letter of acceptance from a permitted disposal site. On or before the last day of the first year of commercial operation, and each year of commercial operation thereafter, CBCP shall report to DEP and RESD concerning the composition and quantity of sludge generated by the zero water discharge system and the method of disposal, including name and location of facilities handling, treating, storing, and/or disposing of said sludge waste.

X. CHANGE IN DISCHARGE

All discharges or emissions authorized herein to CBCP shall be consistent with the terms and conditions of this certification. The discharge of any pollutant not identified in the application or any discharge more frequent than, or at a level in excess of, that authorized herein shall constitute a violation of this certification. Any anticipated facility expansions, production increases, or process modification which will result in new, different or increased discharges or expansion in steam generating capacity will require a submission of new or supplemental application to DEP's Siting Coordination Office pursuant to Chapter 403, F.S.

B-52

XI. NONCOMPLIANCE NOTIFICATION

If, for any reason, either permittee does not comply with or will be unable to comply with any limitation specified in this certification, the permittee shall notify the DEP's Northeast District Office and RESD office by telephone as soon as possible but not later than the first DEP working day after the permittee becomes aware of said noncompliance, and shall confirm the reported situation in writing within seventy-two (72) hours supplying the following information:

A. A description and cause of noncompliance; and

B. The period of noncompliance, including exact dates and times; or, if not corrected, the anticipated time the noncompliance is expected to continue, and steps being taken to reduce, eliminate, and prevent recurrence of the noncomplying event.

XII. FACILITIES OPERATION

Each permittee shall at all times maintain in good working order and operate as efficiently as possible all of its treatment or control facilities or systems installed or used by the permittee to achieve compliance with the terms and conditions of this certification. Such systems are not to be bypassed without prior Department (Northeast District) approval and after notice to RESD except where otherwise authorized by applicable regulations.

XIII. ADVERSE IMPACT

Each permittee shall take all reasonable steps to minimize any adverse impact resulting from its noncompliance with any limitation specified in this certification, including, but not limited to, such accelerated or additional monitoring as necessary to determine the nature and impact of the noncomplying event.

XIV. RIGHT OF ENTRY

The permittees shall allow the Secretary of the Florida Department of Environmental Protection and/or authorized DEP representatives, and representatives of the RESD and SJRWMD, upon the presentation of credentials:

A. To enter upon the permittee's premises where an effluent source is located or in which records are required to be kept under the terms and conditions of this permit; and

B. To have access to and copy all records required to be kept under the conditions of this certification; and

C. To inspect and test any monitoring equipment or monitoring method required in this certification and to sample any discharge or emissional pollutants; and

B-53

D. To assess any damage to the environment or violation of ambient standards.

E. SJRWMD authorized staff, upon proper identification, will have permission to enter, inspect, and observe permitted and related CBCP facilities in order to determine compliance with the approved plans, specifications, and conditions of this certification.

F. RESD authorized staff, upon proper identification, will have permission to enter, inspect, sample any discharge, and observe permitted and related facilities in order to determine compliance with the approved plans, specifications, and conditions of this certification.

XV. REVOCATION OR SUSPENSION

This certification may be suspended, or revoked pursuant to Section 403.512, Florida Statutes, or for violations of any Condition of Certification.

XVI. CIVIL AND CRIMINAL LIABILITY

This certification does not relieve either permittee from civil or criminal responsibility or liability for noncompliance with any conditions of this certification, applicable rules or regulations of the Department, or Chapter 403, Florida Statutes, or regulations thereunder.

Subject to Section 403.511, Florida Statutes, this certification shall not preclude the institution of any legal action or relieve either permittee from any responsibilities or penalties established pursuant to any other applicable State Statutes or regulations.

XVII. PROPERTY RIGHTS

The issuance of this certification does not convey any property rights in either real or personal property, tangible or intangible, nor any exclusive privileges, nor does it authorize any injury to public or private property or any invasion of personal rights, nor any infringement of Federal, State or local laws or regulations. The permittees shall obtain title, lease or right of use to any sovereign submerged lands occupied by the plant, transmission line structures, or appurtenant facilities from the State of Florida.

XVIII. SEVERABILITY

The provisions of this certification are severable, and, if any provision of this certification or the application of any provision of this certification to any circumstances is held invalid, the application of such provision to other circumstances and the remainder of the certification shall not be affected thereby.

B-54

XVIV. DEFINITIONS

The meaning of terms used herein shall be governed by the definitions contained in Chapter 403, Florida Statutes, and any regulation adopted pursuant thereto. In the event of any dispute over the meaning of a term used in these general or special conditions which is not defined in such statutes or regulations, such dispute shall be resolved by reference to the most relevant definitions contained in any other state or federal statute or regulation or, in the alternative, by the use of the commonly accepted meaning as determined by the Department.

XX. REVIEW OF SITE CERTIFICATION

A. The certification shall be final unless revised, revoked, or suspended pursuant to law. At least every five years from the date of issuance of this certification or any National Pollutant Discharge Elimination Control Act Amendments of 1972 for the plant units, the Department shall review all monitoring data that has been submitted to it or it's agent(s) during the preceding five-year period for the purpose of determining the extent of the permittee's compliance with the conditions of this certification of the environmental impact of this facility. The Department shall submit the results of its review and recommendations to the permittees. Such review will be repeated at least every five years thereafter.

XXI. MODIFICATION OF CONDITIONS

The conditions of this certification may be modified in the following manner:

A. The Board hereby delegates to the Secretary the authority to modify, after notice and opportunity for hearing, any conditions pertaining to consumptive use of water, reclaimed water, monitoring, sampling, ground water, surface water, mixing zones, or variances to water quality standards, zones of discharge, leachate control programs, effluent limitations, air emission limitations, fuel, or solid waste disposal, right of entry, railroad spur transmission line, access road, pipelines, or designation of agents for the purpose of enforcing the conditions of this certification.

B. All other modifications shall be made in accordance with Section 403.516, Florida Statutes.

XXII. FLOOD CONTROL PROTECTION

The plant and associated facilities shall be constructed in such a manner as to comply with the Duval County flood protection requirements.

XXIII. EFFECT OF CERTIFICATION

Certification and conditions of certification are predicated upon design and performance criteria indicated in the application. Thus, conformance to those criteria, unless specifically amended, modified, or as the Department and parties are otherwise notified, is binding upon the applicants in the preparation, construction, and maintenance of the certified project. In those instances where a conflict occurs between the application's design criteria and the conditions of certification, the conditions shall prevail.

XXIV. NOISE

To mitigate the effects of noise produced by the steam blowout of steam boiler tubes, each permittee shall conduct public awareness campaigns prior to such activities to forewarn the public of the estimated time and duration of the noise. The permittees shall comply with the applicable noise limitations specified in Environmental Protection Board Rules or The City of Jacksonville Noise Ordinance.

XXV. USE OF WATER FOR COOLING PURPOSES

The CBCP shall use reclaimed wastewater from the Seminole Kraft paper mill (in addition to any wastewater generated by the CBCP that is suitable for reuse for that purpose) for cooling water supply. In the event of disruption of SKC reclaimed wastewater as the cooling water makeup source for Cedar Bay, Inc., Cedar Bay, Inc. will utilize the water retained in SKC's holding basins or other non-potable sources of water as cooling water makeup.

At least 90 days prior to beginning commercial operation, Cedar Bay Cogeneration, Inc. shall submit to the Department a report concerning the actual measured pollutant characteristics of reclaimed water to be obtained from the Seminole Kraft paper mill. Such report shall be based on approved analytical results from four monthly samples obtained directly from the Seminole Kraft waste stream to be tied in with the CBCP cooling system, and shall include the concentrations of BOD5, COD, total organic carbon, total suspended solids, ammonia, pH, oil and grease, calcium, magnesium, sodium, potassium, alkalinity as mg of $CaCO_3$, sulfate, chloride, nitrate, fluoride, silica, chlorine, phosphate (total) as P, cyanide, iron, manganese, aluminum, nickel, zinc, copper, cadmium, chromium, beryllium, arsenic, selenium, antimony, mercury, barium, silver, lead, thallium, phosphorus, and TKN. Where applicable, wastewater sampling and analyses conducted by SKC under the terms of operation permit number I016-200147 may be used to meet the terms of this condition. Any other sampling and analyses submitted under the terms of this permit shall be in accordance with a Department-approved Quality Assurance Plan. Results of all testing and sampling specified above shall be submitted to the Department within 30 days of testing.

B-56

Seminole Kraft's generation, treatment, or discharge of its wastewater is not covered by this site certification, and the permitting of Seminole Kraft's generation, treatment, or discharge of its wastewater does not require Siting Board approval.

XXVI. ENFORCEMENT

A. The Secretary may take any and all lawful actions as he or she deems appropriate to enforce any condition of this certification.

B. Any participating agency (federal, state, local) may take any and all lawful actions to enforce any condition of this certification that is based on the rules of that agency. Prior to initiating such action the agency head shall notify the Secretary of that agency's proposed action.

C. RESD may initiate any and all lawful actions to enforce the conditions of this certification that are based on the Department's rules, after obtaining the Secretary's written permission to so process on behalf of the Department.

XXVII. ENDANGERED AND THREATENED SPECIES

Prior to start of construction, CBCP shall survey the site for endangered and threatened species of animal and plant life. Plant species on the endangered or threatened list shall be transplanted to an appropriate area if practicable. Gopher Tortoises and any commensals on the rare or endangered species list shall be relocated after consultation with the Florida Game and Fresh Water Fish Commission. A relocation program, as approved by the FGFWFC, shall be followed.

XXVIII. ENVIRONMENTALLY SENSITIVE LAND ACQUISITION

a. Periodic Payments

1. As a condition of this certification, CBCP shall be required to make periodic monetary contributions for the purpose of funding a program for the acquisition and management of environmentally sensitive lands in Duval County, Florida. These payments shall be made to The Nature Conservancy, Inc., in trust for the State of Florida, to be used as provided in Section B below; and to the City of Jacksonville Environmental Land Acquisition Trust Fund, to be used as provided in Section C below.

2. The two million dollar payment made by or on behalf of the AES Corporation to The Nature Conservancy, Inc.,(TNC) on or about June 16, 1992, shall be deemed to be the first of two periodic payments, totaling 4.5 million dollars, which the CBCP is obligated to make to TNC under this condition. The second periodic payment, 2.5 million dollars, shall be transmitted within 48 hours of the date on

B-57

which the CBCP commences commercial operation. TNC shall hold all funds received from CBCP or on behalf of CBCP in trust for the State of Florida.

3. Commencing on the anniversary of the second payment required by subsection (2) above, and continuing each year for 30 years thereafter, a payment of $300,000 shall be submitted to the City of Jacksonville for each year that the CBCP remains in commercial operation. Each annual payment shall be transmitted within 48 hours of the anniversary of the date on which commercial operation commenced at CBCP, and shall be deposited in the Jacksonville Environmental Land Acquisition Trust Fund (JELATF) established by § 110.362 of the Jacksonville Ordinance Code.

4. Any failure to achieve timely transmission of a periodic payment required by this condition shall be grounds for revocation of the certification.

5. All funds attributable to the periodic payments required by this condition shall be received, held, disbursed, and expended in conformance with the applicable provisions of this Condition.

6. The express intent of this Condition is to assure that these periodic payments fund the acquisition of lands possessing substantial ecological value to the ecosystem of the St. Johns River watershed; and that lands acquired with funds provided under this condition be managed to retain or enhance the ecological values for which they were acquired. Funds made available under this Condition shall not be used for the development of urban recreational facilities which conflict with the natural resource values of a site. Prohibited facilities include ball fields or courts, playgrounds, and other developed amenities which are not dependent on ecological conditions for their existence and which are not ancillary to public access for recreational enjoyment of the available natural resources.

7. Properly managed natural resource-based recreation which does not degrade the ecological values of a site shall be encouraged through the development of appropriate management plans which shall be approved by the Department for any tract purchased under this Condition. Management of any site shall be consistent with the acquisition criteria specified in this Condition and shall be coordinated with other managers of natural lands in the region, such as the Department, the St. Johns River Water Management District, the National Park Service, the Division of Forestry, and the Florida Game and Fresh Water Fish Commission.

8. Funds made available under this Condition may be used to participate in existing public and private environmental land acquisition programs such as the Conservation and Recreational Lands Program (CARL), Save Our Rivers (SOR), Florida Communities Trust (FCT), Land

B-58

Acquisition Trust Fund (LATF), Preservation 2000, The Nature Conservancy, and other similar programs consistent with the intent behind this condition.

b. Land Acquisition Process: State of Florida

1. All land acquisition and management activities funded by the certification for the use and benefit of the State of Florida or its designee shall be undertaken in accordance with the process established by this Section.

2. The Nature Conservancy (TNC) shall serve as the agent for acquisition of any parcel of land purchased with funds made available under this condition.. The Department and TNC shall enter into an agreement which incorporates the provisions of this Condition and such other provisions not inconsistent with this Condition that the Department finds necessary to assure that this Section is properly implemented in the public interest. The agreement shall specify the duties and responsibilities of the parties with respect to the retention and disbursement of funds received to assure an accurate accounting and audit trail.

3. There shall be a six member Land Acquisition and Management Advisory Council (LAMAC) comprising two representatives appointed by each of the following governmental entities: the Department, the St. Johns River Water Management District, and the City of Jacksonville. TNC shall appoint a representative to serve as chair of the LAMAC. The LAMAC shall hold one or more public hearings for the purpose of receiving public input as to lands potentially suitable for acquisition under this Section. Following appropriate public input, the LAMAC shall report its findings to the Department.

4. After review of the LAMAC report, TNC shall identify and list as many land acquisition options as it deems practicable. A copy of the list shall be submitted to each of the entities represented on the LAMAC. In establishing this list, TNC shall consider:

a. the regional environmental importance of each parcel of property, taking into account its proximity to water bodies and other publicly-held land;

b. the extent of wildlife habitat and diversity on each parcel and the effect of its acquisition on regional efforts towards wildlife conservation; and

c. the potential of each parcel for environmental enhancement, restoration, and natural resource-based recreational uses.

The LAMAC shall review and approve the land acquisition options list before any parcels are acquired under this condition.

5. Following approval of the list, TNC shall initiate selection of parcels to be acquired. In selecting parcels for acquisition, preference shall be given to parcels located near the CBCP site, including parcels within or adjacent to the Timucuan Ecological and Historical Preserve managed by the National Park Service. Preference shall also be given to the selection of larger parcels which can be purchased using contributions from other entities to supplement funds available under this condition. After approval by the Secretary of the Department of a proposed acquisition, the parcel shall be purchased by TNC in trust for the State of Florida.

6. Title to any parcel purchased under this condition shall ultimately vest in a governmental entity following a determination by the Secretary of the Department, after consultation with the LAMAC, as to how the property can be managed most appropriately in the public interest. It is understood that title to a newly-purchased parcel may initially vest in TNC pending this determination and transfer of the title to an appropriate government entity or entities for management. The Siting Board hereby delegates to the Secretary of the Department the authority to select the governmental entity or entities most suitable to hold title and manage any property purchased under this condition. Upon notification from the Department that the selection has occurred, TNC shall forthwith execute a transfer of title to the designated entity or entities.

7. TNC shall be entitled to receive reimbursement from funds held by it under this Condition for any costs related to the performance of an acquisition under this Section. TNC may expend on an annual basis up to two per cent of the purchase price of a parcel to which it holds interim title to defray expenses associated with management of that parcel until title can be transferred as specified in subsection (6).

8. TNC is hereby authorized to explore and enter into financing arrangements which will allow the expected proceeds of the periodic payments required under this condition to be capitalized for immediate utilization in land acquisition or for appropriate installment payments in the event that it is possible to defer full payment for a parcel over a number of years. CBCP shall cooperate to the maximum extent in assisting TNC to achieve such alternate financing arrangements for the benefit of the public as may be practicable.

c. Land Acquisition Process: City of Jacksonville.

1. All land acquisition and management activities funded by Section A.3 of this Condition for the use and benefit of the City of Jacksonville or its designee shall be undertaken in accordance with the process established by this Section.

B-60

2. The Real Estate Division of the City of Jacksonville Public Works Department or another appropriate governmental entity shall serve as the agent for acquisition of any parcel of land purchased with funds made available under this Condition. The Department and the City of Jacksonville shall enter into an agreement which incorporates the provisions of this Condition and such other provisions not inconsistent with this Condition that the Department finds necessary to assure that this Section is properly implemented in the public interest. The agreement shall specify the duties and responsibilities of the parties with respect to the retention and disbursement of funds received to assure an accurate accounting and audit trail.

3. The City of Jacksonville, acting through the Jacksonville Environmental Land Selection Committee (JELSC) established by Mayoral Executive Order 85-81, as amended by Executive Order 91-147, pursuant to § 110.362 of the Jacksonville Ordinance Code, shall identify and list as many land acquisition options as it deems practicable. In establishing its list, JELSC shall consider:

a. the regional environmental importance of each parcel of property, taking into account its proximity to water bodies and other publicly-held land;

b. the extent of wildlife habitat and diversity on each parcel and the effect of its acquisition on regional efforts towards wildlife conservation; and

c. the potential of each parcel for environmental enhancement, restoration, and natural resource-based recreational uses.

d. the goals, objectives, and policies of the Conservation/Coastal Management element of the City's Comprehensive Plan, as amended.

A copy of the JELSC list, as it may be amended from time to time, shall be supplied to the Department and to the St. Johns River Water Management District. JELSC shall furnish a copy of the list upon its initial preparation and after any subsequent amendment thereto.

4. Lands to be acquired under this Section with funds made available in whole or in part under this Condition may be acquired only with the concurrence of the Jacksonville City Council and the Department. In selecting parcels for acquisition, preference shall be given to parcels located near the CBCP site, including parcels within or adjacent to the Timucuan Ecological and Historical Preserve managed by the National Park Service. Preference shall also be given to the selection of larger parcels which can be purchased using contributions from other entities to supplement funds available under this condition. After approval by the Department and the City Council of a proposed acquisition, the parcel shall be purchased by the City.

5. With the approval of the Department and the City Council, title to land acquired under this Section may be sold or transferred to a governmental entity to facilitate effective and beneficial management of the parcel. Any funds received by the City as a result of sale or transfer of property previously acquired under this Section shall be deposited in the JELATF and remain subject to the provisions of this Condition.

6. Any funds paid by CBCP to the JELATF in fulfillment of this Condition or in accordance with any other Condition of Certification may be used for the purpose of managing lands acquired under this Section.

7. The City of Jacksonville is hereby authorized to explore and enter into financing arrangements which will allow the expected proceeds of the periodic payments available under this Section to be capitalized for immediate utilization in land acquisition and management or for appropriate installment payments in the event that it is possible to defer full payment for a parcel over a number of years. CBCP shall cooperate to the maximum extent in assisting the City to achieve such alternate financing arrangements for the benefit of the public as may be practicable.

8. Sale or transfer of any parcel acquired under this Section shall be subject to a reversionary interest retained by the Board of Trustees of the Internal Improvement Trust Fund. In the event that the property ever ceases to be used and managed for environmental purposes consistent with this Condition, ownership of the property shall immediately revert to the State of Florida.

XXIX. TRANSFER OF CERTIFICATION

If the Cedar Bay Cogeneration Project is sold or legally transferred to another owner, notice of such sale or transfer shall immediately be submitted to the Florida Department of Environmental Protection and the agency parties to this certification by the previous certification holder (permittee) and the assignee. Included in the notice shall be the identification of the entity responsible for compliance with the Certification. Any assignment or transfer shall carry with it the full responsibility for the limitations and conditions of this Certification.

B-62

SETTLEMENT STIPULATION

ATTACHMENT C

CONDITION OF CERTIFICATION XXVIII

ATTACHMENT C

XXVIII Environmentally Sensitive Land Acquisistion

A. Periodic Payments

1. As a condition of this certification, CBCP shall be required to make periodic monetary contributions for the purpose of funding a program for the acquisition and management of environmentally sensitive lands in Duval County, Florida. These payments shall be made to The Nature Conservancy, Inc., in trust for the State of Florida, to be used as provided in Section B below; and to the City of Jacksonville Environmental Land Acquisition Trust Fund, to be used as provided in Section C below.

2. The two million dollar payment made by or on behalf of the AES Corporation to The Nature Conservancy, Inc.,(TNC) on or about June 16, 1992, shall be deemed to be the first of two periodic payments, totalling 4.5 million dollars, which the CBCP is obligated to make to TNC under this condition. The second periodic payment, 2.5 million dollars, shall be transmitted within 48 hours of the date on which the CBCP commences commercial operation. TNC shall hold all funds received from CBCP or on behalf of CBCP in trust for the State of Florida.

3. Commencing on the anniversary of the second payment required by subsection (2) above, and continuing each year for 30 years thereafter, a payment of $300,000 shall be submitted to the City of Jacksonville for each year that the CBCP remains in commercial operation. Each annual payment shall be transmitted within 48 hours of the anniversary of the date on which commercial operation commenced at CBCP, and shall be deposited in the Jacksonville Environmental Land Acquisition Trust Fund (JELATF) established by § 110.362 of the Jacksonville Ordinance Code.

4. Any failure to achieve timely transmission of a periodic payment required by this condition shall be grounds for revocation of the certification.

5. All funds attributable to the periodic payments required by this condition shall be received, held, disbursed, and expended in conformance with the applicable provisions of this Condition.

6. The express intent of this Condition is to assure that these periodic payments fund the acquisition of lands possessing substantial ecological value to the ecosystem of the St. Johns River watershed; and that lands acquired with funds provided under this condition be managed to retain or enhance the ecological values for which they were acquired. Funds made available under this Condition shall not be used for the development of urban recreational facilities which conflict with the natural resource values of a site. Prohibited facilities include ball fields or courts, playgrounds, and other developed amenities which are not dependent on ecological conditions for their existence and which are not ancillary to public access for

recreational enjoyment of the available natural resources.

7. Properly managed natural resource-based recreation which does not degrade the ecological values of a site shall be encouraged through the develoment of appropriate management plans which shall be approved by the Department for any tract purchased under this Condition. Management of any site shall be consistent with the acquisition criteria specified in this Condition and shall be coordinated with other managers of natural lands in the region, such as the Department, the St. Johns River Water Management District, the National Park Service, the Division of Forestry, and the Florida Game and Fresh Water Fish Commission .

8. Funds made available under this Condition may be used to participate in existing public and private environmental land acquisition programs such as the Conservation and Recreational Lands Program (CARL), Save Our Rivers (SOR), Florida Communities Trust (FCT), Land Acquisition Trust Fund (LATF), Preservation 2000, The Nature Conservancy, and other similar programs consistent with the intent behind this condition.

B. Land Acquisition Process: State of Florida

1. All land acquisition and management activities funded by the certification for the use and benefit of the State of Florida or its designee shall be undertaken in accordance with the process established by this Section.

2. The Nature Conservancy (TNC) shall serve as the agent for acquisition of any parcel of land purchased with funds made available under this condition. The Department and TNC shall enter into an agreement which incorporates the provisions of this Condition and such other provisions not inconsistent with this Condition that the Department finds necessary to assure that this Section is properly implemented in the public interest. The agreement shall specify the duties and responsibilities of the parties with respect to the retention and disbursement of funds received to assure an accurate accounting and audit trail.

3. There shall be a six member Land Acquisition and Management Advisory Council (LAMAC) comprising two representatives appointed by each of the following governmental entities: the Department, the St. Johns River Water Management District, and the City of Jacksonville. TNC shall appoint a representative to serve as chair of the LAMAC. The LAMAC shall hold one or more public hearings for the purpose of receiving public input as to lands potentially suitable for acquisition under this Section. Following appropriate public input, the LAMAC shall report its findings to the Department.

4. After review of the LAMAC report, TNC shall identify and list as many land acquisition options as it deems practicable. A copy of the list shall be submitted to each of the entities represented on the LAMAC. In establishing this list, TNC shall consider:

a. the regional environmental importance of each parcel of property, taking into account its proximity to water bodies and other publicly-held land;

b. the extent of wildlife habitat and diversity on each parcel and the effect of its acquisition on regional efforts towards wildlife conservation; and

c. the potential of each parcel for environmental enhancement, restoration, and natural resource-based recreational uses.

The LAMAC shall review and approve the land acquisition options list before any parcels are acquired under this condition.

5. Following approval of the list, TNC shall initiate selection of parcels to be acquired. In selecting parcels for acquisition, preference shall be given to parcels located near the CBCP site, including parcels within or adjacent to the Timucuan Ecological and Historical Preserve managed by the National Park Service. Preference shall also be given to the selection of larger parcels which can be purchased using contributions from other entities to supplement funds available under this condition. After approval by the Secretary of the Department of a proposed acquisition, the parcel shall be purchased by TNC in trust for the State of Florida.

6. Title to any parcel purchased under this condition shall ultimately vest in a governmental entity following a determination by the Secretary of the Department, after consultation with the LAMAC, as to how the property can be managed most appropriately in the public interest. It is understood that title to a newly-purchased parcel may initially vest in TNC pending this determination and transfer of the title to an appropriate government entity or entities for management. The Siting Board hereby delegates to the Secretary of the Department the authority to select the governmental entity or entities most suitable to hold title and manage any property purchased under this condition. Upon notification from the Department that the selection has occurred, TNC shall forthwith execute a transfer of title to the designated entity or entities.

7. TNC shall be entitled to receive reimbursement from funds held by it under this Condition for any costs related to the performance of an acquisition under this Section. TNC may expend on an annual basis up to two per cent of the purchase price of a parcel to which it holds interim title to defray expenses associated with management of that parcel until title can be transferred as specified in subsection (6).

8. TNC is hereby authorized to explore and enter into financing arrangements which will allow the expected proceeds of the periodic payments required under this condition to be capitalized for immediate utilization in land acquisition or for appropriate installment payments in the event that it is possible to defer full payment for a parcel over a number of years. CBCP shall

cooperate to the maximum extent in assisting TNC to achieve such alternate financing arrangements for the benefit of the public as may be practicable.

C. Land Acquisition Process: City of Jacksonville

1. All land acquisition and management activities funded by Section A.3 of this Condition for the use and benefit of the City of Jacksonville or its designee shall be undertaken in accordance with the process established by this Section.

2. The Real Estate Division of the City of Jacksonville Public Works Department or another appropriate governmental entity shall serve as the agent for acquisition of any parcel of land purchased with funds made available under this Condition. The Department and the City of Jacksonville shall enter into an agreement which incorporates the provisions of this Condition and such other provisions not inconsistent with this Condition that the Department finds necessary to assure that this Section is properly implemented in the public interest. The agreement shall specify the duties and responsibilities of the parties with respect to the retention and disbursement of funds received to assure an accurate accounting and audit trail.

3. The City of Jacksonville, acting through the Jacksonville Environmental Land Selection Committee (JELSC) established by Mayoral Executive Order 85-81, as amended by Executive Order 91-147, pursuant to § 110.362 of the Jacksonville Ordinance Code, shall identify and list as many land acquisition options as it deems practicable. In establishing its list, JELSC shall consider:

a. the regional environmental importance of each parcel of property, taking into account its proximity to water bodies and other publicly-held land;

b. the extent of wildlife habitat and diversity on each parcel and the effect of its acquisition on regional efforts towards wildlife conservation; and

c. the potential of each parcel for environmental enhancement, restoration, and natural resource-based recreational uses.

d. the goals, objectives, and policies of the Conservation/Coastal Management element of the City's Comprehensive Plan, as amended.

A copy of the JELSC list, as it may be amended from time to time, shall be supplied to the Department and to the St. Johns River Water Management District. JELSC shall furnish a copy of the list upon its initial preparation and after any subsequent amendment thereto.

4. Lands to be acquired under this Section with funds made available in whole or in part under this Condition may be

acquired only with the concurrence of the Jacksonville City Council and the Department. In selecting parcels for acquisition, preference shall be given to parcels located near the CBCP site, including parcels within or adjacent to the Timucuan Ecological and Historical Preserve managed by the National Park Service. Preference shall also be given to the selection of larger parcels which can be purchased using contributions from other entities to supplement funds available under this condition. After approval by the Department and the City Council of a proposed acquisition, the parcel shall be purchased by the City.

5. With the approval of the Department and the City Council, title to land acquired under this Section may be sold or transferred to a governmental entity to facilitate effective and beneficial management of the parcel. Any funds received by the City as a result of sale or transfer of property previously acquired under this Section shall be deposited in the JELATF and remain subject to the provisions of this Condition.

6. Any funds paid by CBCP to the JELATF in fulfillment of this Condition or in accordance with any other Condition of Certification may be used for the purpose of managing lands acquired under this Section.

7. The City of Jacksonville is hereby authorized to explore and enter into financing arrangements which will allow the expected proceeds of the periodic payments available under this Section to be capitalized for immediate utilization in land acquisition and management or for appropriate installment payments in the event that it is possible to defer full payment for a parcel over a number of years. CBCP shall cooperate to the maximum extent in assisting the City to achieve such alternate financing arrangements for the benefit of the public as may be practicable.

8. Sale or transfer of any parcel acquired under this Section shall be subject to a reversionary interest retained by the Board of Trustees of the Internal Improvement Trust Fund. In the event that the property ever ceases to be used and managed for environmental purposes consistent with this Condition, ownership of the property shall immediately revert to the State of Florida.

SETTLEMENT STIPULATION

ATTACHMENT D

SITE PLAN FOR CEDAR BAY COGENERATION PROJECT

ATTACHMENT D

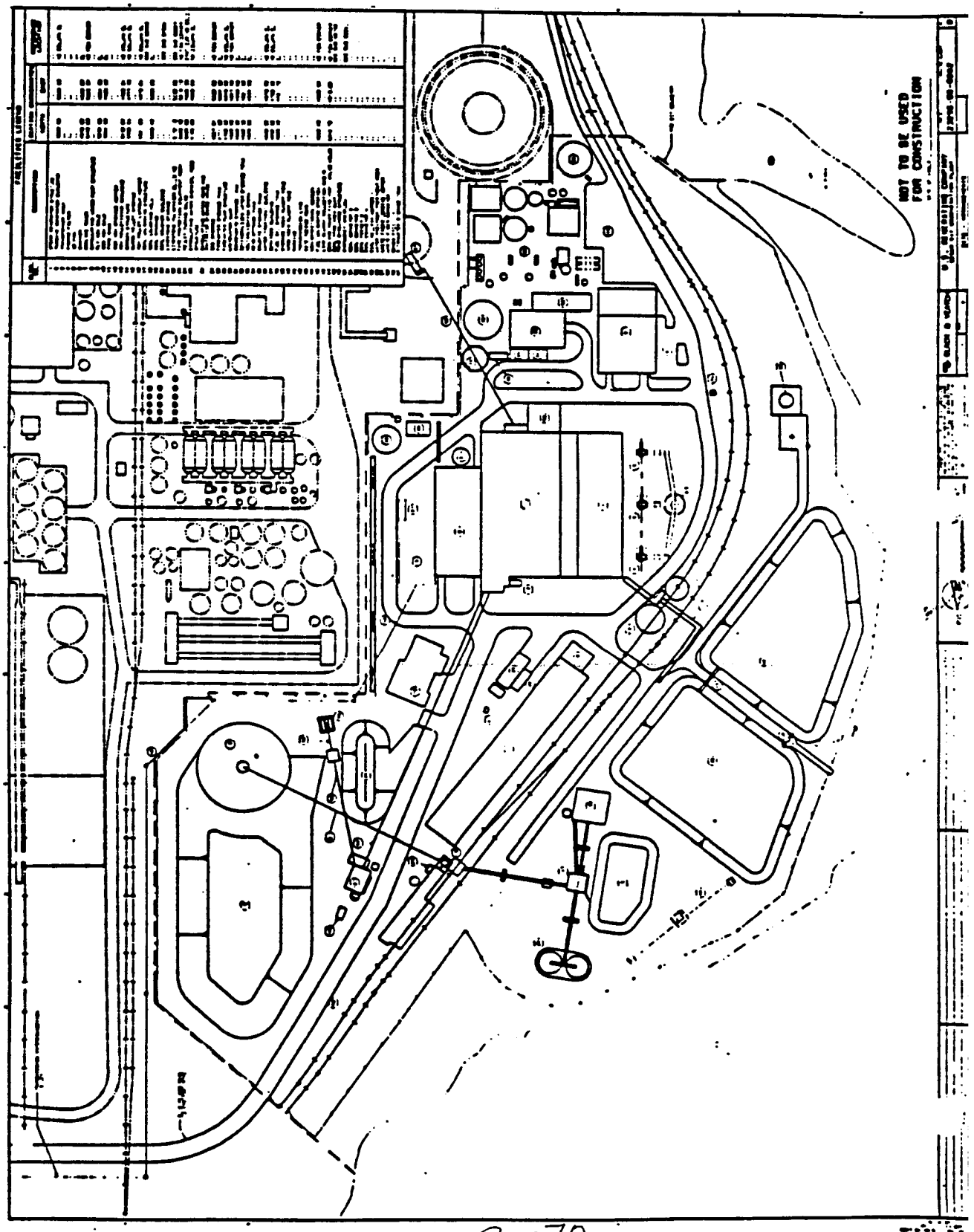

APPENDIX C

EXECUTIVE SUMMARY
ENVIRONMENTAL IMPACT STATEMENT/
STATE ANALYSIS REPORT
CEDAR BAY COGENERATION PROJECT
MAY 1990

EXECUTIVE SUMMARY

ENVIRONMENTAL IMPACT STATEMENT AND STATE ANALYSIS REPORT

Cedar Bay Cogeneration Project
AES/Cedar Bay, Incorporated
Jacksonville, Florida

(X) Draft
( ) Final

U.S. Environmental Protection Agency, Region IV
345 Courtland Street, NE
Atlanta, Georgia 30365

Florida Department of Environmental Regulation
Power Plant Siting Section
2600 Blair Stone Road
Tallahassee, Florida 32301

1. Type of Action: Administrative (X) Legislative ( )

2. Description of Action

Applied Energy Services/Cedar Bay, Inc. (AES-CB) proposes to construct and operate a new source cogeneration facility known as the Cedar Bay Cogeneration Project (CBCP). This facility will consist of three circulating fluidized bed (CFB) boilers which will produce 225 megawatts (MW) of electricity for sale to Florida Power and Light Company (FPL) and 640,000 pounds per hour of process steam for sale to the Seminole Kraft (SK) paper mill. These facilities will be located on a 35 acre site adjacent to the existing SK paper mill in northern Duval County, Florida. AES-CB has applied to the U.S. Environmental Protection Agency (USEPA) and the Florida Department of Environmental Regulation (FDER) for permits necessary to operate and construct the proposed facility.

This joint document has been prepared to satisfy both the requirements of USEPA under the National Environmental Policy Act (NEPA) and of FDER under the Florida Power Plant Siting Act. The USEPA Region IV Administrator has determined that CBCP discharges of wastewater from construction and operation will be a New Source as defined by Section 306 of the Clean Water Act. The CBCP will require a National Pollutant Discharge Elimination System (NPDES) Permit. Issuance of this Permit would be a major Federal action significantly affecting the quality of the human environment and subject to the provisions of NEPA.

Consequently, the USEPA decided that an Environmental Impact Statement (EIS) should be prepared. Because under the Power Plant Siting Act FDER is required to prepare a State Analysis Report (SAR) containing information similar to that required in an EIS, USEPA and FDER have entered into a Memorandum of Understanding agreeing to prepare a single document. This joint document, referred to as the SAR/EIS, will meet the responsibilities of both agencies.

The determination of need for a new steam electric generating facility in Florida is the responsibility of the Florida Public Service Commission (FPSC). On June 30, 1989, the FPSC granted AES-CB and SK their petition for Determination of Need in the FPSC Order No. 21491. The order stated that the CBCP was a qualifying facility pursuant to the Public Utility Regulatory Policies Act of 1978 (PURPA) regulations and that AES-CB has negotiated a contract with FPL for the sale of capacity and energy at less than the statewide avoided cost. This being the case, the FPSC determined that CBCP is the most cost-effective alternative. The discussion of the conservation criterion concluded that, since cogeneration is not necessarily a conservation method, conservation and other demand-side alternatives as envisioned by Florida Energy Efficiency and Conservation Act are not germane to qualifying facility needs determination.

It is recognized that the FPSC order satisfies their own responsibilities in evaluating the need for the CBCP. However, this does not preclude the EIS process, which requires a clear definition of need for a project in order to evaluate a No-Action alternative and the alternative means of satisfying the need. After evaluating relevant documents prepared by the FPSC and the Florida Electric Power Coordinating Group (FCG), it has been determined that for this SAR/EIS the need for the project will be based on the following: 1) need for additional base load capacity of 225 MW for increased reliability in service, 2) need for displacement of the future consumption of 2.2 million barrels of oil per year or equivalent volume of natural gas, and 3) need for 640,000 pounds per hour (pounds/hour) of process steam for use by the SK paper mill.

It is proposed that the CBCP be constructed on the site of the existing SK paper mill in northern Duval County. The site is owned by SK. The total existing paper mill site consists of 425 acres. The new cogeneration facilities will occupy approximately 35 acres at the site and is to be located west of the existing mill and east of the Broward River and the mill lime settling ponds. The area to be occupied by the cogeneration plant is currently used for storage of lime mud from the mill and construction debris. A rail yard is located to the north and west of the proposed plant site. Due to previous disturbances, there is little vegetation on site. The existing vegetation is mostly grasses, weeds, and shrubs.

The proposed plant will consist of three 75 MW CFB boilers, a single steam turbine driven electrical generator, steam pipelines to supply the SK paper mill, mechanical draft cooling tower, coal handling facilities, coal and limestone storage facilities, stormwater runoff control ponds and a 138 kilovolt (KV) transmission line to transfer the power from the plant to the JEA and FPL power network systems. An interconnection from the CBCP to the JEA electric power grid will be made by constructing the transmission line from the cogeneration plant to the JEA's Eastport substation, which is located directly southeast and adjacent to the paper mill.

Initial site preparation will require the relocation of an estimated 230,000 cubic yards of the lime mud which has been stored on the plant site. The lime mud will be placed in a lime mud storage area in the northwestern portion of the SK property. Construction of the storage area will include a geomembrane cap and seeded earth cover.

Construction of the proposed plant and its associated disposal areas will disturb or eliminate approximately 30 acres of poor quality, previously disturbed wildlife habitat. Since paper mill operations have cleared most of the area already, and thereby reduced the value of this community as a habitat for wildlife, additional destruction of these areas will certainly hasten the demise of the biota associated with these areas.

The units are planned for coal-fired operation; however, provisions are being made in the design to allow for burning of wood waste as well. Based on a study of availability of coal sources east of the Mississippi River, there are practical sources of coal adequate to meet the plant's needs over the anticipated life of the project (approximately 1,105,000 tons per year). Coal is to be delivered to the site by train using the existing CSX railroad lines. The rail spur runs northwest to southeast on the site.

The air quality control system is designed on a "worst case" basis assuming the maximum sulfur (3.3 percent) and ash (18 percent) content in the coal and a minimum heating value (10,500 BTU/pound). The emission of air pollutants from the CBCP site are limited by Chapter 17-2, FAC, and by the New Source Performance Standards as imposed by the USEPA. In order to comply with these regulations, AES-CB proposes to utilize washed coal with a fluidized limestone bed to control emission of sulfur oxides. Particulate matter will be controlled by a fabric filter. It is estimated that approximately 354,000 tons per year of fly ash and 88,000 tons per year of bed ash could be generated. This material is to be disposed of by the coal supplier at an approved disposal location outside the State of Florida or sold to the building materials industry.

When all of the units are operating at 100% of rated capacity, the plant will consume 145 tons per hour of coal and will emit 1,913 pounds per hour of nitrogen oxides. The stack height of 425 feet will assist the control equipment in reducing ambient air quality impacts by insuring dispersion and dilution of air pollutants before the pollutants reach ground level at some distance from the site. Only during rare meteorological conditions will stack emissions reach the ground close to the plant.

The primary source of water for the plant will be groundwater from the Floridan aquifer. Fresh groundwater or reclaimed water from Jacksonville sewage treatment plants will be used as makeup to the recirculating cooling water system. Cooling towers will be located at the south end of the CBCP plant area. The maximum discharge temperature of cooling tower blowdown is expected to be 95 degrees Fahrenheit.

Wastewater from the construction and operation of the CBCP will originate from a number of sources such as cooling tower blowdown, boiler blowdown, metal cleaning wastes, sanitary wastes, site runoff, construction dewatering, and low volume wastes such as demineralizer blowdown, floor drains and laboratory wastes. All of the wastewater, except excess stormwater runoff, will be disposed of, after necessary treatment or pretreatment, via existing paper mill treatment and discharge facilities. An erosion and sediment control plan has been developed to minimize construction related runoff impacts.

3. Major Plant Systems Alternatives

Alternative Sites

AES-CB stated in their Site Certification Application (SCA) that the proposed site for the CBCP was an ideal construction site because of its proximity to the steam customer, the SK paper mill, and because the industrial nature of the proposed site (an IH, heavy industrial, zone) has been extensively disturbed by previous industrial use over the last 35 years. Even though the CBCP is in compliance with local zoning ordinances, it must also be found to be consistent with the North District Plan (NDP), prepared by the planning department of the City of Jacksonville. Assuming that the project conforms to the NDP and acknowledging that an alternative site would lengthen the steam delivery line, thereby increasing heat loss and reducing plant fuel use efficiency, further evaluation of alternative sites was determined not to be necessary.

Air Pollution Control Systems

Air emissions control system alternatives were evaluated considering the state of the art of emission control technology,

environmental impacts,and economics. Major sulfur dioxide (SO_2) control alternatives included proper CFB boiler design and operation in conjunction with low sulfur coal, a pulverized coal (PC) boiler followed by a wet limestone scrubber system, and a PC boiler followed by a lime spray dryer system. Based on economics, energy, and environmental considerations, a CFB boiler system designed to meet a 90 percent removal requirement appears to represent Best Available Control Technology (BACT). Particulate control alternatives included fabric filters and electrostatic precipitators. The fabric filters were chosen because of the high particulate control rate. Alternatives to controlling nitrogen oxides (NO_x) emissions include proper boiler design and operation, selective catalytic reduction (SCR), and selective noncatalytic reduction (SNRC, or Thermal $DeNO_x$) control technologies. SNRC is the preferable alternative for NO_x control unless it can be shown clearly that it does not represent BACT.

Cooling Systems

Cooling systems alternatives included the heat dissipation system, the water source, and the discharge receiving body. The primary use of water at the CBCP will be for evaporation in the heat dissipation system. Alternatives examined for the heat dissipation system include once-through cooling, dry and wet-dry cooling towers, wet natural draft cooling towers, and mechanical draft cooling towers. Based on energy and economic considerations, rectangular mechanical draft cooling towers were chosen. Use of surface water, groundwater, recycled wastewater, and reclaimed water (municipal wastewater treatment plant effluent) were the alternatives examined for the cooling water source. The CBCP will use groundwater from the Floridan aquifer as its primary water source and draw from existing SK wells. At the time the City of Jacksonville can provide treated wastewater of sufficient quality, the CBCP will use reclaimed water in the cooling towers, with groundwater used only as a backup. AES-CB has agreed to the St. Johns River Water Management District's (SJRWMD) condition that calls for the use of reclaimed water. Cooling water discharge alternatives include discharge to the Broward River, recycling of treated cooling water, or discharge via SK's existing outfall into the St. Johns River. Discharge through the existing outfall is the chosen alternative.

Water/Wastewater Systems

Because of the high quality and low volume of water needed for potable water uses, no alternative to groundwater use is proposed for secondary water uses. The primary use of water will be for make-up to the cooling system, as described above. Cooling tower blowdown will be routed directly to the existing SK St. Johns River outfall. Surface runoff and yard drains during both construction and operation will be directed to retention ponds after which it will be routed to the existing SK treatment system or directly to the St. Johns River outfall.

One recommended alternative is addition of sand/gravel filters in the retention ponds for improved removal of silt. All other wastewater will be routed to the existing SK wastewater treatment facilities. Wastewater from construction dewatering will be treated by AES before discharge to the existing SK once-through cooling system. Excess runoff from storms exceeding the 10-year, 24-hour rainfall event may be discharged to the Broward River.

Solid Waste Systems

Alternatives were considered for disposal of high volume solid wastes, which for the CBCP include bed ash and fly ash. Alternatives to disposal of bed ash include wet sluicing to a lined ash pond, wet sluicing to dewatering bins with landfill disposal, mechanical ash removal with landfill disposal, and pelletizing with disposal by the coal supplier outside of Florida (or sold within the building industry). Alternatives to disposal of fly ash include wet sluicing to an ash pond for disposal, vacuum conveyance with landfill disposal, and pelletizing with disposal by the coal supplier. Disposal outside the State of Florida by the coal supplier (or sold within the building industry) is the chosen alternative for both types of ash.

4. Alternative Means of Satisfying the Need for the Project

Part 1502.14, Title 40 of the Code of Federal Regulations (40 CFR 1502.14) of the implementation regulations for NEPA require that all reasonable alternatives to the proposed action be considered in the EIS process. The determination of need for the CBCP is based on the need for additional electricity generating capacity and for the displacement of future oil consumption. Analyses of alternative means of satisfying the need for the project are to determine if the proposed project represents the lowest cost and most environmentally sound alternative available to provide electric power to FPL, to displace future oil and/or natural gas consumption, and to provide process steam for use by the SK paper mill. The FPSC did not consider any alternatives to fulfill these requirements during their evaluation of need for this project. Subsequently, the FCG's 1989 Generation Expansion Planning Studies document was used as the basis for alternative development for this SAR/EIS. The alternatives were selected based on their ability to meet the following objectives:

* the alternative must supply at least 225 MW of electric power;

* the alternative must displace at least 2.2 million barrels of oil consumption or natural gas equivalent; and

* need for 640,000 pounds/hour of process steam for use by the SK paper mill.

Based on these criteria, the following five alternative power systems plus the No Action Alternative were developed for evaluation in the SAR/EIS.

Alternative 1 - Purchase of Power

The purchase of power is dependent on the availability of power from an outside utility and the availability of power transmission. As documented in the FCG's 1989 Generation Planning Studies, in September 1985, a detailed study of the economic viability of additional transmission capacity into the state of Florida was completed. This study evaluated the cost-effectiveness of constructing additional transmission facilities in order to raise the transfer capability above the current 3,200 MW level. The study reaches the conclusion that it is unlikely that additional transfers from either the Southern Company or the Tennessee Valley Authority (TVA) above the existing 3,200 MW transfer capability would be economical given the current fuel price outlook. Also, a sensitivity analysis showed minimal reliability benefit from an increase in transfer capability.

Alternative 2 - Residential Solar Hot Water Heaters

Under this alternative, it is assumed that FPL would sponsor a retrofitting of solar water heaters for 50% of all new and 10% of all existing customers in its service areas. Each solar water heater unit is expected to replace the use of approximately 2,100 kilowatt-hour (KWH) of electricity per year at the end of the installation period. This replacement would save FPL approximately 2.4 million barrels of oil per year. The solar water heaters would displace oil-fired generating capacity, and would generate no air pollutants, wastewater discharges, or solid wastes. In addition, they would require no increase in groundwater consumption. The implementation of the solar water heater program would also be expected to boost employment by about 1,650 new jobs for each year of the program in the area of manufacturing and installation of these units. The use of these units, however, would require provision for backup power sufficient to meet peak demand in case weather conditions render them ineffective for an extended period of time. Other disadvantages of this alternative include the complexity of coordination and implementation efforts, the questionable reliability of the heaters, and the large amount of maintenance required.

Alternative 3 - Construction of a Combustion Turbine Power Plant with Coal Gasification

FPL or the applicant would build a combustion turbine power facility with a capacity of 225 MW at the proposed project site. The facility would be comprised of three 75 MW gas turbine generators with Heat Recovery Steam Generators (HRSG). Fuel for the facility would be generated in a fully integrated coal gasification system. Gasification is the process by which coal is converted into a combustible gaseous fuel for consumption. The coal gasification process generates a low BTU gas to be burned in the gas turbines. This is considered a "clean coal technology" in that coal is gasified, the gas generated is then scrubbed of particulates and ammonia and then the sulfur is removed. The coal gas can be a substitute fuel for natural gas. This type of power plant has the ability to meet air emissions restrictions. The installation of a combustion turbine would not be economically feasible unless the low pressure steam produced by the HRSG is utilized in some process. Disadvantages of this alternative include: it involves a highly complex refining process; the technology is just starting to come out of the demonstration stage to commercial viability; it may have problems with high CO_2 emissions; and it requires a high level of maintenance.

Alternative 4 - Construction of a Combined Cycle Coal Gasification Power Plant

FPL or the applicant would build a combined cycle coal gasification power facility with a capacity of 225 MW at the proposed project site. Gasification is the process by which coal is converted into a combustible gaseous fuel for consumption. The facility would be comprised of a gasification combined cycle plant with two 114 MW combined cycle units and a gasification unit. Each combined cycle unit would consist of two gas turbines with associated HRSGs and one steam turbine. The condenser cooling system would require a freshwater source to cool through evaporation and heat transfer. Primary plant stack emissions would be SO_2 and NO_2. The combined cycle technology has many advantages: relatively low investment requirements, phased construction, high operating efficiency and fuel flexibility (natural gas, fuel oil, or gas derived from coal), and ability to meet air emissions restrictions. Disadvantages of this alternative include: it involves a highly complex refining process; the technology is just starting to come out of the demonstration stage to commercial viability; it may have problems with high CO_2 emissions; and it requires a high level of maintenance.

Alternative 5 - Construction of a Conventional Coal-Fired Power Plant

FPL or the applicant would build a conventional coal-fired power plant with a capacity of 225 MW at the same site as the proposed project. The facility would comprise a single pulverized coal/high pressure boiler with a steam turbine generator set. Current design practices relative to NO_x would need to be incorporated in the boiler and burner designs. These units are highly efficient and are capable of burning low-cost widely available coal. However, operation of such a plant would require expensive pollution control facilities to avoid major environmental impacts on air quality.

5. Summary of the Major Environmental Impacts of the Proposed Project and the Alternatives

Proposed Project

The construction of the rail spur and new lime mud disposal area will affect some of the resident gopher tortoise (*Gopherus polyphemus*) population. It should be noted that the den of a gopher tortoise is extremely important as a retreat or hibernaculum to no less than 30 vertebrate and invertebrate species, and many of these organisms rely exclusively on the tortoise burrow for shelter. It may be necessary to relocate gopher tortoise populations as well as some of the associated species.

During plant construction, Class III water quality standards will be met in the discharge of dewatering effluent during construction of the CBCP, except for copper. With respect to copper, the effluent will be treated to achieve a quality at least as good as existing ambient water quality in the Broward River and will be better than the existing copper concentrations in the St. Johns River. Accordingly, FDER has recommended that a two year variance be granted for copper.

Runoff from unusable spoil material and lime mud which is to be stockpiled on the north end of the SK site could potentially affect surface water quality and/or groundwater quality. Details on how and where this runoff will be directed has not as yet been provided by AES-CB.

The major operation impacts of the proposed project primarily affect air resources, the water quality of the St. Johns and Broward Rivers, and groundwater resources in the area. No violation of National Ambient Air Quality Standards or Prevention of Significant Deterioration (PSD) increments is projected for the Jacksonville area or the Okeefenokee Swamp in

response to operation of the CBCP. In fact, the project as proposed will result in overall reductions in ambient air quality impacts.

Operation of CBCP will increase emissions of carbon dioxide. Carbon dioxide is one of several "greenhouse" gases which collectively function to retain heat energy, effectively warming the earth's surface.

During operation of CBCP, pollutant concentrations in the wastewater discharge to the St. Johns River are projected to comply with Class III water quality criteria, except for iron. With respect to iron, the cooling tower will concentrate iron present in well water since iron concentrations occur naturally in the Floridan aquifer. The background level of iron in the St. Johns River frequently is above the Class III standard of 0.3 milligrams per liter. The iron proposed to be discharged is essentially equivalent to concentrations which presently exist in the St. Johns River. Accordingly, a variance for iron has been recommended by FDER.

Some drawdown of the Floridan Aquifer and increased long-term potential for chloride intrusion in the Aquifer would result from groundwater withdrawals at CBCP. Due to existing drought conditions the water pressure in artesian wells has dropped significantly. Artesian and pumped wells close to the site could experience slight reductions in flow or yield. The SJRWMD has reviewed the proposed groundwater withdrawals and concluded that the withdrawals would not cause saline water intrusion or aggravate any of the existing saline water intrusions. SJRWMD also stipulated that at the time the City of Jacksonville can provide treated wastewater of sufficient quality, the CBCP will use reclaimed water in the cooling towers, with groundwater used only as a backup. AES-CB has agreed to the SJRWMD's condition that calls for the use of reclaimed water.

Alternatives

The No Action Alternative, the Purchase Power Alternative, and Alternative 2 (Residential Solar Water Heaters) appear to have little to no environmental impacts during construction and operation. This is misleading for the Purchase Power Alternative because the evaluation only addressed local impacts and not impacts at the site of purchase power generation which in turn could be as significant as those impacts created by the proposed project.

Alternative 2 appears to have a positive impact during construction because of the creation of jobs. Construction and installation would create localized noise and traffic problems at the individual residences for this alternative but thse impacts would be extremely minor in comparison to the power plant alternatives. Although not environmental considerations,

the complexity of coordination and implementation efforts and the questionable reliability of the heaters must be considered in the evaluation of this alternative.

Impacts for the power plant alternatives (Alternatives 3, 4, and 5) during construction and operation are similar to those expected for the CBCP.

6. Mitigation Measures for the Proposed Project

Several measures which would be employed to mitigate the potential impacts of the proposed project on the surrounding environment were identified during the environmental review process. The relocation of affected animals (gopher tortoises) will be done in consultation and conformance with the Game and Freshwater Fish Commission requirements. Construction- related impacts on air resources will be mitigated by employing suitable fugitive dust and burning emission controls. Impacts of construction on water resources can be mitigated by implementation of a comprehensive erosion and sediment control plan and effective treatment of wastewater discharges. Addition of sand/gravel filter systems to the retention ponds for improved removal of silt is recommended. A sedimentation pond will be provided for construction impacted runoff. A physical/chemical treatment system will be required for plant dewatering wastes. Treatment by this system is needed to reduce copper, iron, zinc, and other metals.

Operation-related impacts will be controlled to the best extent practicable. Recirculating cooling towers (with dechlorination) will be used to treat waste heat; sedimentation for stormwater runoff; reuse for boiler blowdown; neutralization and/or oil removal as pretreatment followed by further treatment in the SK industrial waste treatment system (IWTS) for low volume wastes; offsite disposal and/or physical/chemical treatment for metal cleaning wastes; and sedimentation followed by further treatment in the SK IWTS for coal, limestone, and ash storage area runoff. CBCP will use high quality treated wastewater in the cooling towers when it becomes available, in lieu of groundwater. Air emissions will be controlled with fabric filters and boiler design. Fugitive coal dust, limestone dust, fly ash, and spent limestone will be controlled with water spray dust suppression systems, enclosed conveyors, and fabric filters (filters for coal dust only at conveyor transfer points). Total suspended particulates in the cooling tower drift will be controlled by the use of drift eliminators and by limiting the cycles of concentration in the cooling system. AES has set aside money as part of the CBCP to plant trees in order to mitigate carbon dioxide "greenhouse" effects.

7. Unresolved Issues

Numerous changes to the project scope and the SK mill processes have occurred during the preparation of this EIS. The following unresolved issues need to be addressed before completion of the FEIS and issuance of the NPDES permit.

Air Quality

It is unclear at this time whether SNCR should represent BACT for the AES boilers. Therefore, it is important that all available information concerning the proposed level of BACT and the SNCR alternative be submitted by AES prior to the issuance of the FEIS. This information should include, among other things, a comparative analysis between the AES boilers and other CFB's which have been required to install SNCR. This analysis should document any differences in energy, environmental, or economic concerns, between the facilities so that a final BACT recommendation can be made.

Erosion and Sediment Control Plan

Revisions to the Erosion and Sediment Control Plan submitted by AES-CB will be necessary before it is consistent with requirements of Part III.D of the draft NPDES permit and can be considered an acceptable Plan. Specific concerns include: absence of inspection, monitoring and reporting requirements; potential runoff from the lime mud storage area; potential runoff from unusable material which is to be stockpiled on the north end of the SK site; and apparently inadequate size of the Yard Area Runoff Pond.

SK Conversion to Recycled Paperboard

SK is planning to convert their facilities to accommodate recycled paperboard, replacing wood as a raw material in their operations. SK conversion to recycled paperboard will significantly reduce the SK waste flow and will change the characteristics of the combined SK/CBCP effluent from that which has presently been provided in the SCA. Reevaluation of the waste flow is needed in the FEIS. In addition, it is unclear whether or not wood wastes will be burned at CBCP after conversion to recycled paperboard. This could affect air quality evaluations. Clarification is needed before issuance of the FEIS.

Toxicity of CBCP Waste Stream

Some agreement will have to be established between AES-CB and SK as to how resolution of future toxicity problems will be effected, should they occur, if CBCP wastes discharged into the SK system prove to be more toxic than presently anticipated and

result in the SK effluent being acutely toxic. Present evaluation indicates that additional treatment and/or dilution in the SK treatment system may render the combined waste not acutely toxic. However, the SK manufacturing process is being modified and dilution flow will decrease in the future. SK is (and will remain) subject to toxicity monitoring of the total effluent exiting its treatment system. In addition, facilities at SK (some of which may have been in operation for 10 to 20 years or more) may be approaching useful life expectancy. EPA has no assurance that SK will be in operation over the useful lifetime of the CBCP. Assurances on these points prior to FEIS issuance are desirable.

Waste Effluent Treatment Systems

Details on treatment systems proposed for dewatering wastes and metal cleaning wastes (both chemical and nonchemical) have not been provided by AES-CB and therefore cannot be evaluated to determine if adequate treatment can be provided to meet NPDES requirements. A thorough description of these treatment systems is needed prior to FEIS issuance.

Groundwater

The SJRWMD required AES-CB to use the USGS groundwater flow and transport models to perform a hydrologic investigation to determine the impacts of the proposed withdrawals on existing legal users and the impacts to the groundwater resources itself. Concerns relating to the limitations of this modeling effort include the following: 1) large grid size used may have masked significant localized effects; 2) normal faults neglected in the model could possibly, on a smaller scale, allow chloride contamination to increase in the upper water bearing zone; 3) apparently existing pumpage rates were used rather than the full permitted pumpage rates for the existing permitted uses; and 4) assumption of constant head boundary conditions could bias the piezometric head in the upper water bearing zone. It is recommended that sensitivity analyses be conducted to evaluate the effects of these concerns. Results of these analyses need to be included in the FEIS. In addition, if estimates of anticipated future applications for groundwater withdrawals are available, it is recommended that this information be included in the analysis described above.

8. USEPA's Preferred Alternative and Recommended Action

It is anticipated that AES-CB and SK will resolve the outstanding environmental issues associated with the CBCP. Based on preliminary findings, USEPA tentatively proposes to issue the NPDES Permit with conditions (See Appendix B, Draft NPDES Permit). CBCP appears to be an economically advantageous project for Jacksonville, its citizens, and FPL and it. customers. Not only does it displace oil and/or natural gas, but by providing steam to the SK paper mill, it allows for removal of old boilers, thereby producing a net decrease in emissions of air pollutants. In addition, it provides additional generating capacity for the utilities which would have to be constructed at a later time as system demand rises and older units are phased out of use. Given the advantages offered by CBCP and pending resolution of the outstanding issues, USEPA finds the proposed project, CBCP, to be the preferred alternative. The environmentally preferable components of CBCP are:

* Ambient air quality will be improved in the Jacksonville area and in the Okeefenokee Swamp area.

* Thermal water discharges as a result of the existing SK once-through cooling system will be significantly reduced. Elimination of this system will also eliminate entrainment and impingement of aquatic species into the SK cooling system.

* Existing contamination near the site will be cleaned up, or monitored for potential remedial actions, as appropriate.

* Utilizing a previously impacted industrial site makes impacts on wildlife and wildlife habitat from the project minimal.

It must be noted that based on the initial findings of this SAR/EIS, various system alternatives to the proposed project are available which appear to be environmentally sound as well as economically feasible. These are:

* SNRC is the preferable alternative for NO_x control unless it can be shown clearly that it does not represent BACT.

* At the time the City of Jacksonville can provide treated wastewater of sufficient quality, the CBCP will use reclaimed water in the cooling towers, with groundwater used only as a backup. AES-CB has agreed to the SJRWMD's condition that calls for the use of reclaimed water.

* The addition of sand/gravel filters in the retention ponds for improved removal of silt is a viable alternative.

9. FDER's Recommendations

FDER has recommended certification of the Cedar Bay Project. This recommendation is based on the following rationale:

1. Replacement of old pulp mill facilities by the CBCP will reduce existing ambient air quality impacts.

2. Relocation of old lime mud piles to a proper area could alleviate an existing situation causing a violation of groundwater quality standards and reduce an additional loading of heavy metals to the St. Johns Estuary.

3. Discharges from the SK wastewater treatment system can contribute contaminants to the St. Johns River which already contains excessive amounts of those contaminants. Proper operation of the wastewater treatment facility, use of mixing zones and approval of variances for some metals would allow certification to be granted.

If the Cedar Bay Cogeneration Project should receive State of Florida Certification, FDER recommends that the Conditions of Certification (Appendix D) be imposed to ensure that the construction and operation of the CBCP is in conformance with the applicable standards, regulations and laws of this State and that the facility have minimal adverse impact on the environment.

C-15

(blank)

APPENDIX D

PERMIT NO. PSD-FL-137 AND FINAL DETERMINATION

New L.to 6.2.22 - PSD Permit c: Owen Pauls.

Florida Department of Environmental Regulation
Twin Towers Office Bldg. • 2600 Blair Stone Road • Tallahassee, Florida 32399-2400
Lawton Chiles, Governor
Carol M. Browner, Secretary

March 28, 1991

CERTIFIED MAIL - RETURN RECEIPT REQUESTED

Mr. Jeff Swain
AES/Cedar Bay Inc.
1001 North 19th Street
Arlington, Virginia 22209

Dear Mr. Swain:

Re: AES/Cedar Bay Inc.
Cogeneration Project, PSD-FL-137

Please find enclosed the above referenced permit. You have the right to petition for an administrative hearing pursuant to Section 120.57, Florida Statutes, within 14 days of receipt of this permit or file a Notice of Appeal pursuant to Rule 9.110, Florida Rules of Appellate Procedure, within 30 days from the date this permit is filed with the Clerk of the Department. Further, you may request a public hearing. Such request must be submitted within 30 days of receipt of this permit.

If you have any questions, please call Barry Andrews at (904)488-1344 or write to me at the above address.

Sincerely,

Barry D. Andrews

for C. H. Fancy, P.E.
Chief
Bureau of Air Regulation

CHF/kt

enclosure

cc: J. Harper, EPA
A. Kutyna, NE District
K. Kurts, BESD
T. Cole, Oertel & Hoffman

D-1

(blank)

Florida Department of Environmental Regulation
Twin Towers Office Bldg. • 2600 Blair Stone Road • Tallahassee, Florida 32399-2400
Lawton Chiles, Governor
Carol M. Browner, Secretary

PERMITTEE:
AES/Cedar Bay, Inc.
1001 North 19th Street
Arlington, VA 22209

Permit Number: PSD-FL-137
County: Duval
Latitude/Longitude: 30°25'21"N 81°36'23"W
Project: Cogeneration Project

This permit is issued under the provisions of Chapter 403, Florida Statutes, and Florida Administrative Code Chapters 17-2 and 17-4. The above named permittee is hereby authorized to perform the work or operate the facility shown on the application and approved drawings, plans, and other documents attached hereto or on file with the Department and made a part hereof and specifically described as follows:

For the installation of an integrated cogeneration power plant complex at the Seminole Kraft Corporation facility located in Jacksonville, Florida. The power complex will consist of three coal/bark fired circulating fluidized bed (CFB) boilers, the respective coal handling equipment and limestone dryers, to be owned and operated by AES Cedar Bay, Inc.

The CFB boiler, rated at 3,189 MMBtu will burn fuel made up of approximately 96 percent coal and 4 percent bark. The boilers will generate steam to produce power from a turbine generator set. The cogeneration facility will generate 225 MW of electricity for sale to Florida Power & Light as well as low pressure process steam for the Seminole Kraft Corporation.

Nitrogen oxides will be controlled by the good combustion characteristics which are an inherent part of the CFB technology. Sulfur dioxide will be controlled by limiting the average annual sulfur content to 1.7% and the inherent limestone scrubbing provided by the CFB technology. Particulates will be controlled with fabric filters.

Construction shall be in accordance with the permit application and additional information submitted except as otherwise noted in the Specific Conditions.

Attachments:

1. Power plant site certification package PA 88-24 and its associated attachments, dated January 19, 1990.
2. Letter from EPA dated March 27, 1991.
3. DER's Final Determination dated March 28, 1991.

D-3

GENERAL CONDITIONS:

1. The terms, conditions, requirements, limitations, and restrictions set forth in this permit are "Permit Conditions" and are binding and enforceable pursuant to Sections 403.161, 403.727, or 403.859 through 403.861, Florida Statutes. The permittee is placed on notice that the Department will review this permit periodically and may initiate enforcement action for any violation of these conditions.

2. This permit is valid only for the specific processes and operations applied for and indicated in the approved drawings or exhibits. Any unauthorized deviation from the approved drawings, exhibits, specifications, or conditions of this permit may constitute grounds for revocation and enforcement action by the Department.

3. As provided in Subsections 403.087(6) and 403.722(5), Florida Statutes, the issuance of this permit does not convey any vested rights or any exclusive privileges. Neither does it authorize any injury to public or private property or any invasion of personal rights, nor any infringement of federal, state or local laws or regulations. This permit is not a waiver of or approval of any other Department permit that may be required for other aspects of the total project which are not addressed in the permit.

4. This permit conveys no title to land or water, does not constitute State recognition or acknowledgement of title, and does not constitute authority for the use of submerged lands unless herein provided and the necessary title or leasehold interests have been obtained from the State. Only the Trustees of the Internal Improvement Trust Fund may express State opinion as to title.

5. This permit does not relieve the permittee from liability for harm or injury to human health or welfare, animal, or plant life, or property caused by the construction or operation of this permitted source, or from penalties therefore; nor does it allow the permittee to cause pollution in contravention of Florida Statutes and Department rules, unless specifically authorized by an order from the Department.

6. The permittee shall properly operate and maintain the facility and systems of treatment and control (and related appurtenances) that are installed or used by the permittee to achieve compliance with the conditions of this permit, as required by Department rules. This provision includes the operation of backup or auxiliary facilities or similar systems when necessary to achieve compliance with the conditions of the permit and when required by Department rules.

PERMITTEE:
AES/Cedar Bay Inc.

Permit No. AC PSD-FL-137
County: Duval

GENERAL CONDITIONS:

7. The permittee, by accepting this permit, specifically agrees to allow authorized Department personnel, upon presentation of credentials or other documents as may be required by law and at a reasonable time, access to the premises, where the permitted activity is located or conducted to:

a. Have access to and copy any records that must be kept under the conditions of the permit;

b. Inspect the facility, equipment, practices, or operations regulated or required under this permit; and

c. Sample or monitor any substances or parameters at any location reasonably necessary to assure compliance with this permit or Department rules.

Reasonable time may depend on the nature of the concern being investigated.

8. If, for any reason, the permittee does not comply with or will be unable to comply with any condition or limitation specified in this permit, the permittee shall immediately provide the Department with the following information:

a. a description of and cause of non-compliance; and

b. the period of noncompliance, including dates and times; or, if not corrected, the anticipated time the non-compliance is expected to continue, and steps being taken to reduce, eliminate, and prevent recurrence of the non-compliance.

The permittee shall be responsible for any and all damages which may result and may be subject to enforcement action by the Department for penalties or for revocation of this permit.

9. In accepting this permit, the permittee understands and agrees that all records, notes, monitoring data and other information relating to the construction or operation of this permitted source which are submitted to the Department may be used by the Department as evidence in any enforcement case involving the permitted source arising under the Florida Statutes or Department rules, except where such use is proscribed by Sections 403.73 and 403.111, Florida Statutes. Such evidence shall only be used to the extent it is consistent with the Florida Rules of Civil Procedure and appropriate evidentiary rules.

10. The permittee agrees to comply with changes in Department rules and Florida Statutes after a reasonable time for compliance,

D-5

PERMITTEE:
AES/Cedar Bay Inc.

Permit No. AC PSD-FL-137
County: Duval

GENERAL CONDITIONS:

provided, however, the permittee does not waive any other rights granted by Florida Statutes or Department rules.

11. This permit is transferable only upon Department approval in accordance with Florida Administrative Code Rules 17-4.120 and 17-30.300, F.A.C., as applicable. The permittee shall be liable for any non-compliance of the permitted activity until the transfer is approved by the Department.

12. This permit or a copy thereof shall be kept at the work site of the permitted activity.

13. This permit also constitutes:

(x) Determination of Best Available Control Technology (BACT)
(x) Determination of Prevention of Significant Deterioration (PSD)
(x) Compliance with New Source Performance Standards

14. The permittee shall comply with the following:

a. Upon request, the permittee shall furnish all records and plans required under Department rules. During enforcement actions, the retention period for all records will be extended automatically unless otherwise stipulated by the Department.

b. The permittee shall hold at the facility or other location designated by this permit records of all monitoring information (including all calibration and maintenance records and all original strip chart recordings for continuous monitoring instrumentation) required by the permit, copies of all reports required by this permit, and records of all data used to complete the application for this permit. These materials shall be retained at least three years from the date of the sample, measurement, report, or application unless otherwise specified by Department rule.

c. Records of monitoring information shall include:

- the date, exact place, and time of sampling or measurements;
- the person responsible for performing the sampling or measurements;
- the dates analyses were performed;
- the person responsible for performing the analyses;
- the analytical techniques or methods used; and
- the results of such analyses.

D-6

PERMITTEE:
AES/Cedar Bay Inc.

Permit No. AC PSD-FL-137
County: Duval

General Conditions:

15. When requested by the Department, the permittee shall within a reasonable time furnish any information required by law which is needed to determine compliance with the permit. If the permittee becomes aware that relevant facts were not submitted or were incorrect in the permit application or in any report to the Department, such facts or information shall be corrected promptly.

SPECIFIC CONDITIONS:

1. The construction and operation of AESCB shall be in accordance with all applicable provisions of Chapters 17-2, F.A.C.. In addition to the foregoing, AESCB shall comply with the following conditions of certification as indicated.

A. Emission Limitations for AES Boilers

1. Fluidized Bed Coal Fired Boilers (CFB)

a. The maximum coal charging rate of each CFB shall neither exceed 104,000 lbs/hr, 39,000 tons per month (30 consecutive days), nor 390,000 tons per year (TPY). This reflects a combined total of 312,000 lbs/hr, 117,000 tons per month, and 1,170,000 TPY for all three CFBs.

b. The maximum wood waste (primarily bark) charging rate to the No. 1 and No. 2 CFBs each shall neither exceed 15,653 lbs/hr, nor 63,760 TPY. This reflects a combined total of 31,306 lbs/hr, and 127,521 TPY for the No. 1 and No. 2 CFBs. The No. 3 CFB will not utilize woodwaste, nor will it be equipped with wood waste handling and firing equipment.

c. The maximum heat input to each CFB shall not exceed 1063 MMBtu/hr. This reflects a combined total of 3189 MMBtu/hr for all three units.

d. The sulfur content of the coal shall not exceed 1.7% by weight on an annual basis. The sulfur content shall not exceed 3.3% by weight on a shipment (train load) basis.

e. Auxiliary fuel burners shall be fueled only with natural gas or No. 2 fuel oil with a maximum sulfur content of 0.3% by weight. The fuel oil or natural gas shall be used only for startups. The maximum annual oil usage shall not exceed 160,000 gals/year, nor shall the maximum annual natural gas usage exceed 22.4 MMCF per year. The maximum heat input from the fuel oil or gas shall not exceed 1120 MMBtu/hr for the CFBs.

f. The CFBs shall be fueled only with the fuels permitted in Conditions 1a, 1b, and 1e above. Other fuels or wastes shall not be burned without prior specific written approval of the Secretary of DER pursuant to condition XXI, Modification of Conditions.

g. The CFBs may operate continuously, i.e, 8760 hrs/yr.

2. Coal Fired Boiler Controls

The emissions from each CFB shall be controlled using the following systems:

a. Limestone injection, for control of sulfur dioxide.
b. Baghouse, for control of particulate.

3. Flue gas emissions from each CFB shall not exceed the following:

		Emission Limitations		
Pollutant	lbs/MMBtu	lbs/hr	TPY	TPY for 3 CFBs
CO	0.19	202	823	2468
NOx	0.29	308.3	1256	3767
SO_2	0.60 (3-hr avg.)	637.8	--	--
	0.31 (12 MRA)	329.5	1338	4015
VOC	0.015	16.0	65	195
PM	0.020	21.3	87	260
PM_{10}	0.020	21.3	86	257
H_2SO_4 mist	0.024	25.5	103	308
Fluorides	0.086	91.4	374	1122
Lead	0.007	7.4	30	91
Mercury	0.00026	0.276	1.13	3.4
Beryllium	0.00011	0.117	0.5	1.5

Note: TPY represents a 93% capacity factor. MRA refers to a twelve month rolling average.

4. Visible emissions (VE) shall not exceed 20% opacity (6 min. average), except for one 6 minute period per hour when VE shall not exceed 27% opacity.

5. Compliance with the emission limits shall be determined by EPA reference method tests included in the July 1, 1988 version of 40 CFR Parts 60 and 61 and listed in Condition No. 7 of this permit or by equivalent methods after prior DER approval.

D-8

PERMITTEE:
AES/Cedar Bay Inc.

Permit No. AC PSD-FL-137
County: Duval

6. The CFBs are subject to 40 CFR Part 60, Subpart Da; except that where requirements within this certification are more restrictive, the requirements of this certification shall apply.

7. Compliance Tests for each CFB

a. Initial compliance tests for PM/PM_{10}, SO_2, NOx, CO, VOC, lead, fluorides, mercury, beryllium and H_2SO_4 mist shall be conducted in accordance with 40 CFR 60.8 (a), (b), (d), (e), and (f).

b. Annual compliance tests shall be performed for PM, SO_2 and NOx, commencing no later than 12 months from the initial test.

c. Initial and annual visible emissions compliance tests shall be determined in accordance with 40 CFR 60.11(b) and (e).

d. The compliance tests shall be conducted between 90-100% of the maximum liscensed capacity and firing rate of each permitted fuel.

e. The following test methods and procedures of 40 CFR Parts 60 and 61 or other DER approved methods with prior DER approval shall be used for compliance testing:

(1) Method 1 for selection of sample site and sample traverses.
(2) Method 2 for determining stack gas flow rate.
(3) Method 3 or 3A for gas analysis for calculation of percent O_2 and CO_2.
(4) Method 4 for determining stack gas moisture content to convert the flow rate from actual standard cubic feet to dry standard cubic feet.
(5) Method 5 or Method 17 for particulate matter.
(6) Method 6, 6C, or 8 for SO_2.
(7) Method 7, 7A, 7B, 7C, 7D, or 7E for nitrogen oxides.
(8) Method 8 for sulfuric acid mist.
(9) Method 9 for visible emissions, in accordance with 40 CFR 60.11.
(10) Method 10 for CO.
(11) Method 12 for lead.
(12) Method 13B for fluorides.
(13) Method 25A for VOCs.
(14) Method 101A for mercury.
(15) Method 104 for beryllium.

D-9

PERMITTEE:
AES/Cedar Bay Inc.

Permit No. AC PSD-FL-137
County: Duval

8. Continuous Emission Monitoring for each CFB AESCB shall use Continuous Emission Monitors (CEMS) to determine compliance. CEMS for opacity, SO_2, NOx, CO, and O_2 or CO_2, shall be installed, calibrated, maintained and operated for each unit, in accordance with 40 CFR 60.47a and 40 CFR 60 Appendix F.

a. Each continuous emission monitoring system (CEMS) shall meet performance specifications of 40 CFR 60, Appendix B.

b. CEMS data shall be recorded and reported in accordance with Chapter 17-2, F.A.C., and 40 CFR 60. A record shall be kept for periods of startup, shutdown and malfunction.

c. A malfunction means any sudden and unavoidable failure of air pollution control equipment or process equipment to operate in a normal or usual manner. Failures that are caused entirely or in part by poor maintenance, careless operation or any other preventable upset condition or preventable equipment breakdown shall not be considered malfunctions.

d. The procedures under 40 CFR 60.13 shall be followed for installation, evaluation and operation of all CEMS.

e. Opacity monitoring system data shall be reduced to 6-minute averages, based on 36 or more data points, and gaseous CEMS data shall be reduced to 1-hour averages, based on 4 or more data points, in accordance with 40 CFR 60.13(h).

f. For purposes of reports required under this certification, excess emissions are defined as any calculated average emission concentration, as determined pursuant to Condition No. 10 herein, which exceeds the applicable emission limit in Condition No. 3.

9. Operations Monitoring for each CFB

a. Devices shall be installed to continuously monitor and record steam production, and flue gas temperature at the exit of the control equipment.

b. The furnace heat load shall be maintained between 70% and 100% of the design rated capacity during normal operations.

c. The coal, bark, natural gas and No. 2 fuel oil usage shall be recorded on a 24-hr (daily) basis for each CFB.

D-10

PERMITTEE:
AES/Cedar Bay Inc.

Permit No. AC PSD-FL-137
County: Duval

10. Reporting for each CFB

a. A minimum of thirty (30) days prior notification of compliance test shall be given to DER's N.E. District office and to the BESD (Bio-Environmental Services Division) office, in accordance with 40 CFR 60.

b. The results of compliance test shall be submitted to the BESD office within 45 days after completion of the test.

c. The owner or operator shall submit excess emission reports to BESD, in accordance with 40 CFR 60. The report shall include the following:

(1) The magnitude of excess emissions computed in accordance with 40 CFR 60.13(h), any conversion factors used, and the date and time of commencement and completion of each period of excess emissions (60.7(c)(1)).

(2) Specific identification of each period of excess emissions that occurs during startups, shutdowns, and malfunctions of the furnace boiler system. The nature and cause of any malfunction (if known) and the corrective action taken or preventive measured adopted (60.7(c)(2)).

(3) The date and time identifying each period during which the continuous monitoring system was inoperative except for zero and span checks, and the nature of the system repairs or adjustments (60.7(c)(3)).

(4) When no excess emissions have occured or the continuous monitoring system has not been inoperative, repaired, or adjusted, such information shall be stated in the report (60.7(c)(4)).

(5) The owner or operator shall maintain a file of all measurements, including continuous monitoring systems performance evaluations; monitoring systems or monitoring device calibration; checks; adjustments and maintenance performed on these systems or devices; and all other information required by this permit recorded in a permanent form suitable for inspection (60.7(d)).

d. Annual and quarterly reports shall be submitted to BESD as per F.A.C. Rule 17-2.700(7).

11. Any change in the method of operation, fuels utilized, equipment, or operating hours or any other changes pursuant to F.A.C. Rule 17-2.100, defining modification, shall be submitted for approval to DER's Bureau of Air Regulation.

D-11

PERMITTEE:
AES/Cedar Bay Inc.

Permit No. AC PSD-FL-137
County: Duval

B. AES - Material Handling and Treatment

1. The material handling and treatment operations may be continuous, i.e. 8760 hrs/yr.

2. The material handling/usage rates shall not exceed the following:

Material	Handling/Usage Rate TPM	TPY
Coal	117,000	1,170,000
Limestone	27,000	320,000
Fly Ash	28,000	336,000
Bed Ash	8,000	88,000

Note: TPM is tons per month based on 30 consecutive days, TPY is tons per year.

3. The VOC emissions from the maximum No. 2 fuel oil utilization rate of 240 gals/hr, 2,100,000 gals/year for the limestone dryers; and 8000 gals/hr, 160,000 gals/year for the three boilers are not expected to be significant.

4. The maximum emissions from the material handling and treatment area, where baghouses are used as controls for specific sources, shall not exceed those listed below (based on AP-42 factors):

Source	Particulate Emissions lbs/hr	TPY
Coal Rail Unloading	neg	neg
Coal Belt Feeder	neg	neg
Coal Crusher	0.41	1.78
Coal Belt Transfer	neg	neg
Coal Silo	neg	neg
Limestone Crusher	0.06	0.28
Limestone Hopper	0.01	0.03
Fly Ash Bin	0.02	0.10
Bed Ash Hopper	0.06	0.25
Ash Silo	0.06	0.25
Common Feed Hopper	0.03	0.13
Ash Unloader	0.01	0.06

The emissions from the above listed sources and the limestone dryers are subject to the particulate emission limitation requirement of 0.03 gr/dscf. However, neither DER nor BESD will require particulate tests in accordance with EPA Method 5 unless the

D-12

PERMITTEE:
AES/Cedar Bay Inc.

Permit No. AC PSD-FL-137
County: Duval

VE limit of 5% opacity is exceeded for a given source, or unless DER or BESD, based on other information, has reason to believe the particulate emission limits are being violated.

5. Visible Emissions (VE) shall not exceed 5% opacity from any source in the material handling and treatment area, in accordance with F.A.C. Chapter 17-2.

6. The maximum emissions from each of the limestone dryers while using oil shall not exceed the following (based on AP-42 factors, Table 1, 3-1, Industrial Distillate, 10/86):

	Estimated Limitations		
Pollutant	lbs/hr	TPY	TPY for 2 dryers
PM/PM_{10}	0.25	1.1	2.2
SO_2	5.00	21.9	43.8
CO	0.60	2.6	5.2
NOx	2.40	10.5	21.0
VOC	0.05	0.2	0.4

Visible emissions from the dryers shall not exceed 5% opacity. If natural gas is used, emissions limits shall be determined by factors contained in AP-42 Table 1. 4-1, Industrial 10/86.

7. The maximum No. 2 fuel oil firing rate for each limestone dryer shall not exceed 120 gals/hr, or 1,050,000 gals/year. This reflects a combined total fuel oil firing rate of 240 gals/hr, and 2,100,000 gals/year, for the two dryers.
The maximimum natural gas firing rate for each limestone dryer shall not exceed 16,800 CF per hour, or 147 MMCF per year

8. Initial and annual Visible Emission compliance tests for all the emission points in the material handling and treatment area, including but not limited to the sources specified in this permit, shall be conducted in accordance with the July 1, 1988 version of 40 CFR 60, using EPA Method 9.

9. Compliance test reports shall be submitted to BESD within 45 days of test completion in accordance with Chapter 17-2.700(7) of the F.A.C.

10. Any changes in the method of operation, raw materials processed, equipment, or operating hours or any other changes pursuant to F.A.C. Rule 17-2.100, defining modification, shall be submitted for approval to DER's Bureau of Air Regulation (BAR).

D-13

PERMITTEE:
AES/Cedar Bay Inc.

Permit No. AC PSD-FL-137
County: Duval

C. Requirements For the Permittees

1. Beginning one month after certification, AESCB shall submit to BESD and DER's BAR, a quarterly status report briefly outlining progress made on engineering design and purchase of major equipment, including copies of technical data pertaining to the selected emission control devices. These data should include, but not be limited to, guaranteed efficiency and emission rates, and major design parameters such as air/cloth ratio and flow rate. The Department may, upon review of these data, disapprove the use of any such device. Such disapproval shall be issued within 30 days of receipt of the technical data.

2. The permittees shall report any delays in construction and completion of the project which would delay commercial operation by more than 90 days to the BESD office.

3. Reasonable precautions to prevent fugitive particulate emissions during construction, such as coating of roads and construction sites used by contractors, regrassing or watering areas of disturbed soils, will be taken by the permittees.

4. Fuel shall not be burned in any unit unless the control devices are operating properly, pursuant to 40 CFR Part 60 Subpart Da.

5. The maximum sulfur content of the No. 2 fuel oil utilized in the CFBs and the two unit limestone dryers shall not exceed 0.3 percent by weight. Samples shall be taken of each fuel oil shipment received and shall be analyzed for sulfur content and heating value. Records of the analyses shall be kept a minimum of two years to be available for DER and BESD inspection.

6. Coal fired in the CFBs shall have a sulfur content not to exceed 3.3 percent by weight. Coal sulfur content shall be determined and recorded in accordance with 40 CFR 60.47a.

7. AESCB shall maintain a daily log of the amounts and types of fuel used and copies of fuel analyses containing information on sulfur content and heating values.

8. The permittees shall provide stack sampling facilities as required by Rule 17-2.700(4) FAC.

9. Prior to commercial operation of each source, the permittees shall each submit to the BAR a standardized plan or procedure that will allow that permittee to monitor emission control equipment efficiency and enable the permittee to return malfunctioning equipment to proper operation as expeditiously as possible.

D-14

PERMITTEE:
AES/Cedar Bay Inc.

Permit No. AC PSD-FL-137
County: Duval

D. Contemporaneous Emission Reductions

This certification and any individual air permits issued subsequent to the final order of the Board certifying the power plant site under 403.509, F.S., shall require, that the following Seminole Kraft Corporation sources be permanently shut down and made incapable of operation, and shall turn in their operation permits to the Division of Air Resources Management's Bureau of Air Regulation, upon completion of the initial compliance tests on the AESCB boilers: the No. 1 PB (power boiler), the No. 2 PB, the No. 3 PB, the No. 1 BB (bark boiler), and the No. 2 BB. BESD shall be specifically informed in writing within thirty days after each individual shut down of the above referenced equipment. This requirement shall operate as a joint and individual requirement to assure common control for purpose of ensuring that all commitments relied on are in fact fulfilled.

Issued this 28th day
of March, 1991

STATE OF FLORIDA DEPARTMENT
OF ENVIRONMENTAL REGULATION

Carol M. Browner

Carol M. Browner, Secretary

D-15

Attachment 1

Available Upon Request

Attachment 2

UNITED STATES ENVIRONMENTAL PROTECTION AGENCY
REGION IV
345 COURTLAND STREET, N.E.
ATLANTA, GEORGIA 30365

4APT-AEB MAR 27 1991

Mr. Clair H. Fancy, P.E., Chief
Bureau of Air Regulation
Florida Department of Environmental
Regulation
Twin Towers Office Building
2600 Blair Stone Road
Tallahassee, Florida 32399-2400

RE: Preliminary Determination for AES/Cedar Bay (PSD-FL-137)

Dear Mr. Fancy:

This is to acknowledge receipt of your preliminary determination and draft Prevention of Significant Deterioration (PSD) permit for the above referenced facility dated March 11, 1991. We have reviewed the package as requested and have the following comments.

Public Notice

The public notice submitted in the package was specifically for the Site Certification Process. The notice is dated February 5, 1990, with the Site Certification Hearing scheduled for February 5, 1990. This does not fulfil the 30 day notice and comment period requirement of Florida's PSD regulation which was approved pursuant to 40 CFR §51.162. Item 8 of the public notice requires that persons "wishing to intervene in these proceedings must be represented by an attorney or other person who can be determined to be qualified..." which is not consistent with the PSD regulation. Other notable items in the public notice are as follows:

1. The notice states that DER has been granted a delegation by EPA to carry out the PSD review process. As you know, Florida is a SIP approved state rather than a delegated state.

2. The increment consumption given in the notice of 0% for all pollutants and averaging times is misleading since it was based on the erroneous emissions netting between Seminole Kraft and AES/Cedar Bay. As detailed to you in our letter of November 14, 1989, and as acknowledged on page 33 of your preliminary determination, netting of emissions between Seminole Kraft and AESCB is not applicable. Thus, the increment consumption reported in the public notice is not correct.

D-18

Printed on Recycled Paper

BACT Analysis

The determination of BACT made by DER included combustion controls to limit NO_x emissions and a SO_2 removal efficiency of 90% resulting in emission limits of 0.29 lb NO_x/MMBTU and 0.31 lb SO_2/MMBTU. These limits are higher than what is currently being permitted even for pulverized coal boilers. We believe that NO_x add-on controls are technically feasible for this project and that SO_2 emissions could be reduced through the use of lower sulfur coal and through increasing the removal efficiency. However, due to the circumstances involved in this project, we will defer to the decision of DER for this project.

If you have any questions on these comments, please contact Mr. Gregg Worley of my staff at (404) 347-2904.

Sincerely yours,

Winston A. Smith, Director
Air, Pesticides, and Toxics
Management Division

Final Determination

AES/Cedar Bay Inc.
Cogeneration Project
Duval County, Florida

Permit No: PSD-FL-137

Florida Department of Environmental Regulation
Division of Air Resources Management
Bureau of Air Regulation

March 28,.1991

D-20

Final Determination

AES/Cedar Bay, Inc.'s PSD permit application (part of the Power Plant Siting application), has been reviewed by the Division of Air Resources Management. Comments received from EPA Region IV dated March 27, 1991 (see attachment 2) are addressed below.

Public Notice

The EPA questioned why the notice was published on the same date that the Site Certification Hearing was scheduled to begin, thereby not providing a 30 day notice and comment period.

Notice was published originally on December 8, 1989, for a January 8, 1990 hearing. A copy of the proposed Notice was sent to Region IV on December 1, 1989 for review. No comments were received regarding the increment consumptions reflected in the Notice sent to EPA. The hearing was then postponed from January 8, 1990 to February 5, 1990. The hearing then had to be continued on February 20, 1990 for which the Notice was published on February 12, 1990. In addition, public access hearings were held on February 7, 1990 and February 21, 1990 for nonparty members of the public. The public always has the right to speak. Only if they intervene as a formal party do they need an attorney as required by Florida law.

BACT Analysis

The Department agrees with EPA that add-on NOx controls are technically feasible for the AES/Cedar Bay project. The decision to establish the NOx limitation at 0.29 lb/MMBtu was based on the overall benefits that would be obtained from the construction of the cogeneration facility (the additional cost of SNCR would cause the project to become financially unfeasible). The circulating fluidized bed (CFB) boilers will replace older boilers which have higher emissions per heat input. In addition, the 0.29 lb/MMBtu limitation was judged to be the most stringent limitation placed on a coal fired boiler which does not have add-on NOx controls.

For sulfur dioxide, the Department evaluated the cost of switching to a lower sulfur coal and determined that such a cost was prohibitive. It should be noted that the decision to limit the average annual sulfur content to 1.7 percent is well below the initial proposal of 3.3 percent by the applicant. With regard to the control efficiency, the Department believes that 90 percent efficiency is reasonable for the CFB design.

(blank)

APPENDIX E

FLORIDA PUBLIC SERVICE COMMISSION ORDER GRANTING DETERMINATION OF NEED AND ORDER APPROVING SECOND AMENDED COGENERATION AGREEMENT

BEFORE THE FLORIDA PUBLIC SERVICE COMMISSION

RECEIVED JUL 5 1989

In re: Petition of AES Cedar Bay, Inc. and Seminole Kraft Corporation for determination of need for the Cedar Bay Cogeneration Project.	)	DOCKET NO. 881472-EQ ORDER NO. 21491 ISSUED: 6-30-89

The following Commissioners participated in the disposition of this matter:

MICHAEL McK. WILSON, Chairman
THOMAS M. BEARD
BETTY EASLEY
GERALD L. GUNTER
JOHN T. HERNDON

ORDER GRANTING DETERMINATION OF NEED

BY THE COMMISSION:

On November 10, 1988, AES Cedar Bay, Inc. (AES) and Seminole Kraft Corporation (Seminole Kraft) filed a need determination application with the Department of Environmental Regulation (DER) and a petition for determination of need with this Commission pursuant to the provisions of the Florida Electrical Power Plant Siting Act (Siting Act), Sections 403.501-.517, Florida Statutes.

In its petition, AES has requested that it be allowed to build a 225 MW circulating fluidized bed coal qualifying facility (QF) located at an existing industrial site adjacent to and on the property of the Seminole Kraft paper mill in Jacksonville, Florida. All of the electricity produced by this QF will be sold to Florida Power and Light Company (FPL) under the terms of a negotiated agreement. On December 13, 1988, this agreement was submitted to the Commission for approval in Docket No. 881570-EQ.

On January 4, 1989, the Staff filed a motion to implead FPL as an indispensable party in this docket. This motion was denied by the prehearing officer on January 30, 1989, in Order No. 20671. The direct testimony of Gerald J. Gorman, Kerry G. Varkonda, Lawrence A. Stanley, and Dennis W. Bakke was filed on March 13, 1989. The direct testimony of Jeffrey V. Swain and Myron R. Rollins was filed on March 14, 1989 and March 15, 1989, respectively. The direct testimony of Juan E. Enjamio and Joseph C. Collier was filed on March 17, 1989 and March 20, 1989, respectively. All of these witnesses submitted testimony on behalf of AES and Seminole Kraft.

This docket was heard in conjunction with Docket No. 881570-EQ, Florida Power and Light's petition for approval of its cogeneration agreement with AES, on April 24 and 25, 1989 before the full Commission and was subsequently voted on at the agenda conference of June 6, 1989.

In evaluating a petition for determination of need, we are bound by the statutory requirements of Sections 403.507(1)(b) and Section 403.519, Florida Statutes, as well as our rules implementing those sections, Rules 25-22.080-.081, Florida Administrative Code. Section 403.519 was passed in 1980 as part of the Florida Energy Efficiency and Conservation Act

E-1

DOCUMENT NUMBER-DATE
06508 JUN 30 1989
FPSC-RECORDS/REPORTING

(FEECA), Sections 366.80-.85, Florida Statutes, and was intended to remedy several problems which had arisen in the implementation of the Siting Act subsequent to its initial passage in 1973.

First, the section was intended to allow need determinations to be initiated at the Commission prior to the filing of a formal application with DER. Second, it codified court rulings that the "sole forum" for the determination of need was the Commission. Third, it lists specific items which "shall" be considered by the Commission in deciding the question of power plant need: "need for electric system reliability and integrity", "need for adequate electricity at a reasonable cost", "whether the proposed plant is the most cost-effective alternative available", "conservation measures . . . which might mitigate the need for the proposed plant" and "other matters within its jurisdiction which it deems relevant."

This language was intended to "flesh-out" the general language of Section 403.507(1)(b) which states, in part:

> The Public Service Commission shall prepare a report as to the present and future need for the electrical generating capacity to be supplied by the proposed electrical power plant. The report may include the comments of the commission with respect to any matters within its jurisdiction.

Reliability and integrity

The load flow studies performed by FPL for this project indicate that the 225 MW of generation produced by AES when interconnected at Jacksonville Electric Authority's Eastport substation in 1993 can be integrated into the statewide transmission system. The line losses associated with the transmission of this power to FPL's load centers in south Florida will be approximately 14.5 MW or 6.4% of the output of the project at summer peak. This compares with line losses of approximately 47.2 MW or 7.6% of the total output of one of the St. John River Power Park units. In addition, the negotiated agreement between FPL and AES provides a remedy should AES's generation at its site in northeast Florida negatively impact southward transmission flows, or FPL's purchase of less expensive electricity. Based on these facts, we find that FPL's ratepayers are adequately protected from any potential adverse effects on system integrity and reliability resulting from purchases from AES.

Adequate electricity at a reasonable cost

Over the term of the negotiated agreement between FPL and AES, the net present value of the stream of revenues associated with the agreement is less than that of the standard offer contract based on the statewide avoided unit, a 1995 coal unit, and less than the net present value of the stream of revenues associated with the units identified in FPL's generation expansion plan as its own avoided units, 1994 combined cycle units.

AES has negotiated a long-term contract for coal supply, coal transportation and coal waste disposal with Costain. Additionally, bark from the kraft mill will be available to supply a supplemental source of fuel approximately 5% of the time. Further, there are plentiful United States and international reserves of limestone which are acceptable for sulfur dioxide capture. AES intends to enter into a long-term contract for its purchase and has no reason to believe that such contract will not be easily obtained at a reasonable price. Thus we find that this project will provide adequate electricity to FPL and peninsular Florida at a reasonable cost.

Cost-effective alternative

The circulating fluidized bed boilers are the first to be constructed in Florida for the production of electricity. This project is a QF pursuant to our rules and AES has negotiated a contract at less than statewide avoided cost for the sale of firm capacity and energy to FPL which falls within the current subscription limit of 500 MW. That being the case, this Commission has already found the proposed QF to be the most cost-effective alternative available.

Conservation

In previous QF need determination cases, we have concluded that "cogeneration is a conservation measure." In re: Petition of Hillsborough County for determination of need for a solid waste-fired cogeneration power plant, 83 F.P.S.C. 10:104, 105 (1983); In re: Petition of Pinellas County for determination of need for a solid waste-fired cogeneration power plant, 83 F.P.S.C. 10:106, 107 (1983); In re: Petition by Broward County for determination of need for a solid waste-fired electrical power plant, 85 F.P.S.C. 5:67, 68 (1985); In re: Petition by Broward County for determination of need for a solid waste-fired electrical power plant, 86 F.P.S.C. 2:287, 288 (1986). We have rethought this position. Traditionally, conservation in the electric industry has been thought of in two ways: an increase in fuel efficiency and a reduction in demand. The first, increased fuel efficiency, is a net reduction in the amount of fuel used to provide the same amount of electricity. The second, a reduction in electric demand, often peak-hour demand, results in the deferral of additional plant construction. The legislative intent of FEECA, 366.80-.85, Florida Statutes, to reduce "the growth rates of electric consumption and weather-sensitive peak demand"; to increase "the overall efficiency and cost-effectiveness of electricity and natural gas production and use"; and to conserve "expensive resources, particularly petroleum fuels" reflects this understanding of conservation. Section 366.81, Florida Statutes.

However, as the testimony by Witness Bakke indicates, there is a recognition in the industry that cogeneration does not "conserve" fuel in the traditional sense, it merely utilizes fuel to "deliver a service at the least cost." In some instances the fuel efficiency of a cogeneration unit will be the factor that makes a cogeneration project a cost-effective means of producing power, but that is not necessarily the case. The price of the electricity produced by

a cogeneration unit could be lower than of comparable noncogeneration units simply because the sales price of the steam produced by the QF and sold to the steam host is high and produces a great deal of profit. That being the case, conservation and other demand-side alternatives as envisioned by FEECA, are not germaine to qualifying facility need determinations.

Associated facilities

Approximately 1/2 mile of 138 kV transmission line will be required to tie the proposed project into the electric grid at the Jacksonville Electric Authority Eastport substation.

Other jurisdictional matters

At hearing and in its brief, AES argued that the Commission should properly consider the following facts in reaching its decision in this need determination: displacement of oil currently used by the paper mill; significant reduction in the emission of pollutants (SO2, NOx, particulates, TRS) associated with the production of paper products at the paper mill; minimal land use impacts; creation and retention of jobs in the Jacksonville area; introduction into Florida of a "clean coal" technology without direct risk to ratepayers; and reduction of the thermal impact on the St. Johns River. Conversely, the Citizens Group stated at the hearing that the environmental impacts of the project were not all beneficial and questioned the size and type of plant which AES proposes to construct. To the extent that these matters are not discussed above, we find that they are outside the jurisdiction of this Commission as set forth in Sections 403.501-.517 and 403.519, Florida Statutes, and not properly considered in this proceeding.

Stipulation

We approve the following stipulation entered into by the parties to this docket:

1. That the 42 MW of electricity produced by the Seminole Kraft recovery boilers and used internally in the paper mill will replace existing capacity and represents no net change in generating capacity;

2. That the original equipment was installed prior to October 1, 1973; and that

3. These facts establish a prima facie need for this segment of the proposed AES Cedar Bay project.

Therefore, it is

ORDERED by the Florida Public Service Commission that the Petition of AES Cedar Bay, Inc. and Seminole Kraft Corporation for Determination of Need for the Cedar Bay Cogeneration Project is hereby granted. It is further

ORDERED that this order constitutes the final report required by Section 403.507(1)(b), Florida Statutes, the report concluding that a need exists, within the meaning of Section 403.519, Florida Statutes, for the construction of the 225 MW generating facility proposed by AES Cedar Bay, Inc. and the 42 MW recovery boiler by Seminole Kraft Corporation. It is further

ORDERED that a copy of this order be furnished to the Department of Environmental Regulation, as required by Section 403.507(1)(b), Florida Statutes.

By ORDER of the Florida Public Service Commission this 30th day of JUNE, 1989.

STEVE TRIBBLE, Director
Division of Records and Reporting

(S E A L)

by: Kay Flynn
Chief, Bureau of Records

SBr

(blank)

BEFORE THE FLORIDA PUBLIC SERVICE COMMISSION

In re: Petition for approval of amended cogeneration agreement between Florida Power & Light Company and AES Cedar Bay, Inc.	DOCKET NO. 900686-EQ ORDER NO. 23651 ISSUED: 10-23-90

The following Commissioners participated in the disposition of this matter:

THOMAS M. BEARD
BETTY EASLEY
GERALD L. GUNTER
FRANK S. MESSERSMITH

NOTICE OF PROPOSED AGENCY ACTION

ORDER APROVING SECOND AMENDED COGENERATION AGREEMENT BETWEEN FLORIDA POWER & LIGHT COMPANY AND AES CEDAR BAY, INC.

BY THE COMMISSION:

NOTICE is hereby given by the Florida Power Service Commission that the action discussed herein is preliminary in nature and will become final unless a person whose interests are adversely affected files a petition for a formal proceeding, pursuant to Rule 25-22.029, Florida Administrative Code.

CASE BACKGROUND

In accordance with Commission rules, AES Cedar Bay, Inc. (AES) and Florida Power & Light Company (FPL) negotiated a contract for the purchase of cogenerated firm energy and capacity dated May 6, 1988. Pursuant to Order No. 21468, issued June 28, 1989, the Commission approved this agreement as amended on November 9, 1988.

On August 10, 1990, Florida Power & Light Company (FPL) filed a petition for approval of Amendment No. 2 to the Agreement for the Purchase of Firm Capacity and Energy between AES Cedar Bay, Inc. and Florida Power & Light Company. FPL contends that this second revision is necessary in order to allow FPL to economically dispatch the AES Cedar Bay facility. In its petition, FPL requests that the Commission make the findings that: (1) the Amended Agreement is reasonable, prudent and in the best interest of FPL's ratepayers; (2) the Amended Agreement contains adequate security

E-7

DOCUMENT NUMBER-DATE
05423 OCT 23 90

based on AES Cedar Bay's financial stability; (3) no costs in excess of full avoided costs are likely to be incurred by FPL over the initial term of the Amended Agreement; (4) all payments for energy and capacity made by FPL pursuant to the Amended Agreement may be recovered from FPL's customers; (5) FPL shall not be required to resell the energy and capacity purchased pursuant to the Amended Agreement to another electric utility as long as their retention is the best interest of FPL's ratepayers; and, (6) the Amended Agreement is consistent with the "determination of need" granted by the Commission by Order No. 21491 issued on June 30, 1989.

The Commission's current rules on the approval of negotiated contracts require the comparison of the contract to the applicable standard offer contract. The standard offer contract that was in effect at the time this contract was entered into was based on a 1995 500 MW coal unit. This comparison was provided by AES and the Amended Agreement is shown to be below the cumulative net present value of the standard offer contract. As part of its petition, FPL provided a comparison of the Original and the Amended Agreement to show that the Amended Agreement is projected to be slightly below the Original Agreement on a cumulative present worth basis. The figures provided by AES and FPL coincide and are shown on Attachment A. We find that the amendments to the agreement are virtually revenue neutral and are less than the value of applicable standard offer contract.

The Original Amendment stated that the initial committed capacity of the facility will be "at least 180 MW and not greater than 250 MW." This agreement was considered in concert with the need determination proceeding for this project. The Amended Agreement contains identical language. At the time of the need determination proceeding, it was anticipated that the steam requirements of Seminole Kraft would limit the electrical output of the AES facility to approximately 225 MW. Since the language in the Amended Agreement allows for a range of committed capacity, just like the original agreement, we find that the Amended Agreement is consistent with the determination of need granted by this Commission pursuant to Order No. 21491.

In Docket No. 891570-EQ (the original contract petition) we issued Order No. [illegible] approving the contract and finding it

appropriate for cost recovery in accordance with Rule 25-17.083(2), Florida Administrative Code. That rule defines three criteria to be considered in making a determination of prudency for cost recovery purposes. These criteria may be summarized as:

(a) The purchase can reasonably be expected to result in the economic deferral or avoidance of capacity construction from a statewide perspective;

(b) The cumulative present worth of the payments for firm energy and capacity are no greater than the cumulative present value of the deferral of the statewide avoided unit; and

(c) The agreement contains adequate security provisions to protect ratepayers in the event AES Cedar Bay fails to perform pursuant to the terms of the agreement.

As previously stated, this Second Amended Agreement provides for payments for energy and capacity which have cumulative net present value of less than the applicable standard offer contract. The Second Amended Agreement appears to contain greater security provisions for FPL's ratepayers than the original agreement. The record is devoid of evidence suggesting any basis for altering our previous finding that "the purchase...can reasonably be expected to result in the economic deferral or avoidance of additional capacity construction by Florida utilities from a statewide perspective." We therefore find that this amended agreement meets the criteria of Rule 25-17.083(2) and that payments for energy and capacity made by FPL pursuant to the Amended Agreement may be recovered from FPL's customers.

Since the agreement (1) contains adequate security for FPL's ratepayers; (2) has a cumulative net present value of less than the applicable standard offer contract, (3) is consistent with the

determination of need granted by the Commission in Order No. 21491, we find that the Amended Agreement is reasonable, prudent and in the best interest of FPL's ratepayers.

A finding that FPL should not be required to resell the capacity and energy is not necessary or appropriate to make a determination concerning the merits of this contract amendment. As stated in Order No. 22424 "the question of whether FPL is required to resell, and if so, at what price, is best addressed by this body when such a transaction takes place or a substantially affected person alleges that such a transaction should have taken place."

Based on the foregoing, it is

ORDERED by the Florida Public Service Commission that the petition filed by Florida Power & Light Company for the approval of the Amended Cogeneration Agreement with AES Cedar Bay, Inc. should be and is hereby granted. It is further

ORDERED that this Order shall become final unless an appropriate petition for formal proceeding is received by the Division of Records and Reporting, 101 East Gaines Street, Tallahassee, Florida 32399-0870, by the close of business on the date indicated in the Notice of Further Proceedings or Judicial Review.

By ORDER of the Florida Public Service Commission, this 23rd day of OCTOBER, 1990.

STEVE TRIBBLE, Director
Division of Records and Reporting

(S E A L)

RVE

NOTICE OF FURTHER PROCEEDINGS OR JUDICIAL REVIEW

The Florida Public Service Commission is required by Section 120.59(4), Florida Statutes, to notify parties of any administrative hearing or judicial review of Commission orders that is available under Sections 120.57 or 120.68, Florida Statutes, as well as the procedures and time limits that apply. This notice should not be construed to mean all requests for an administrative hearing or judicial review will be granted or result in the relief sought.

The action proposed herein is preliminary in nature and will not become effective or final, except as provided by Rule 25-22.029, Florida Administrative Code. Any person whose substantial interests are affected by the action proposed by this order may file a petition for a formal proceeding, as provided by Rule 25-22.029(4), Florida Administrative Code, in the form provided by Rule 25-22.036(7)(a) and (f), Florida Administrative Code. This petition must be received by the Director, Division of Records and Reporting at his office at 101 East Gaines Street, Tallahassee, Florida 32399-0870, by the close of business on November 13, 1990.

In the absence of such a petition, this order shall become effective on the day subsequent to the above date as provided by Rule 25-22.029(6), Florida Administrative Code, and as reflected in a subsequent order.

Any objection or protest filed in this docket before the issuance date of this order is considered abandoned unless it satisfies the foregoing conditions and is renewed within the specified protest period.

If this order becomes final and effective on the date described above, any party adversely affected may request judicial review by the Florida Supreme Court in the case of an electric, gas or telephone utility or by the First District Court of Appeal in the case of a water or sewer utility by filing a notice of appeal with the Director, Division of Records and Reporting and filing a copy of the notice of appeal and the filing fee with the appropriate court. This filing must be completed within thirty (30) days of the effective date of this order, pursuant to Rule

9.110, Florida Rules of Appellate Procedure. The notice of appeal must be in the form specified in Rule 9.900(a), Florida Rules of Appellate Procedure.

ATTACHMENT A

SUMMARY OF PAYMENTS PURSUANT TO
FPL/AES AMENDED CONTRACT ($ 000)

YEAR	1995 STANDARD OFFER CONTRACT	ORIGINAL AGREEMENT	AMENDED AGREEMENT
1990	$0	$0	$0
1991	$0	$0	$0
1992	$0	$0	$0
1993	$75,936	$65,831	$65,720
1994	$81,947	$68,701	$68,584
1995	$74,213	$71,776	$71,652
1996	$78,770	$75,038	$74,906
1997	$83,655	$78,353	$78,214
1998	$88,757	$81,873	$81,726
1999	$94,228	$85,465	$85,310
2000	$100,054	$89,511	$89,347
2001	$106,180	$93,094	$92,922
2002	$112,715	$96,498	$96,320
2003	$119,921	$101,044	$100,854
2004	$127,316	$105,660	$105,460
2005	$135,081	$110,500	$110,288
2006	$143,376	$115,696	$115,471
2007	$152,201	$121,249	$121,009
2008	$161,588	$126,890	$126,637
2009	$171,513	$132,888	$132,620
2010	$182,106	$139,395	$139,109
2011	$193,235	$146,124	$145,820
2012	$205,183	$153,094	$152,772
2013	$217,788	$143,357	$143,015
2014	$231,168	$150,720	$150,355
2015	$245,370	$159,642	$159,249
2016	$260,445	$167,468	$167,051
2017	$276,447	$176,586	$176,140
NPV (1990)	$805,811	$670,926	$669,648

(blank)

APPENDIX F

FEDERAL AVIATION ADMINISTRATION RESPONSE TO FAA FORM 7460-1

U.S. Department of Transportation
Federal Aviation Administration

Southern Region

P. O. Box 20636
Atlanta, Georgia 30320

OCT 25 1991

Mr. Kerry VorKonda
Plant Manager
AES Cedar Bay, Inc,
9469 Eastport Road
Jacksonville, FL 32218

Dear Mr. VorKonda:

We have completed a feasibility study which determined that an instrument approach procedure (IAP) to the Jacksonville International Airport is feasible. The IAP will be based on your proposed non-federal nondirectional radio beacon (NDB) as submitted on FAA Form 7460-1, dated August 9, 1991, and the latest revised 7460-1, dated October 22, 1991. A copy of the response to the executed 7460-1 is enclosed.

You are authorized to proceed with the establishment of the facility. Advisory Circular (AC) 150/5300-13 should be used as a reference for siting and installation of the NDB. The installation of this facility may change your obligations regarding approach clearance, runway marking, and other airport design standards. Also, revision of the airport layout plan may be necessary. For further information, contact the Orlando, Florida, Airports District Office at (407) 648-6582.

Your maintenance technician must pass a concept and performance examination to comply with the requirements of Federal Aviation Regulation (FAR), Part 171. Also, a pre-commissioning ground inspection of the facility will be necessary which will require the participation of your technician. The Manager, Airway Facilities Sector (AFS), Jacksonville, Florida, is responsible for administering the written Concepts Examination, the Performance Examination, and the ground inspection. Please contact Mr. Vince Preston, or his representative, at (904) 741-0292, to make arrangements for the examinations and inspection.

Pending favorable examination results by your technician and confirmation by AFS personnel that the facility meet operational requirements, a commissioning flight inspection will be requested by the FAA. It will take approximately 12 weeks following a successful flight inspection before the IAP can be published and the facility commissioned for instrument flight rules use.

Should you have questions, please call Mr. Willis Weatherly, Non-Federal Facilities Coordinator, at (404) 763-7851.

Sincerely,

Original signed by
Gene D. Tolar
for R. S. Insand
Manager, Resource and Planning Branch

Enclosure

cc:
Mr. Pete Norgeot
11401 Lamar Location P6B4
Overland Park, KS 66211

F-1

DO NOT REMOVE CARBONS

U.S. Department of Transportation
Federal Aviation Administration

NOTICE OF PROPOSED CONSTRUCTION OR ALTERATION

Form Approved OMB No. 2120-0001

Aeronautical Study Number: 91-ASO-1842-OE

1. Nature of Proposal

A. Type: XX New Construction ☐ Alteration

B. Class: XX Permanent ☐ Temporary (Duration _____ months)

C. Work Schedule Dates: Beginning January 1990 End ~~Before stack exceeds 200ft.~~

2A. Name and address of individual, company, corporation, etc. proposing the construction or alteration. (Number, Street, City, State and Zip Code)

(904) ~~751-3882~~ (Area Code Telephone Number)

AES Cedar Bay, Inc.
Kerry Varkonda, Plant Manager
9469 Eastport Road
Jacksonville, FL. 32218

2B. Name, address and telephone number of proponent's representative if different than 2 above.

N/a

2. Complete Description of Structure

A. Include effective radiated power and assigned frequency of all existing, proposed or modified AM, FM, or TV broadcast stations utilizing this structure.

B. Include size and configuration of power transmission lines and their supporting towers in the vicinity of FAA facilities and public airports.

C. Include information showing site orientation, dimensions, and construction materials of the proposed structure.

Twintee Antenna for Nondirectional Beacon

(If more space is required, continue on a separate sheet.)

4. Location of Structure

A. Coordinates (To nearest second)
Latitude: 30° 25' 27"
Longitude: 81° 36' 35"

B. Nearest City or Town, and State: Jacksonville, FL
Within City Limits

C. Name of nearest airport, heliport, flight park, or seaplane base: Jacksonville International
(1) Distance from structure to nearest point of nearest runway: 5Nm
(2) Direction from structure to airport: 314°

5. Height and Elevation (Complete to the nearest foot)

A. Elevation of site above mean sea level	15
B. Height of Structure including all appurtenances and lighting (if any) above ground, or water if so situated	60
C. Overall height above mean sea level (A + B)	75

D. Description of location of site with respect to highways, streets, airports, prominent terrain features, existing structures, etc. Attach a U.S. Geological Survey quadrangle map or equivalent showing the relationship of construction site to nearest airport(s). (If more space is required, continue on a separate sheet of paper and attach to this notice.)

See Prior Submittals re: Aeronautical Study # 88-ASO-1414-OE
91-ASO-1414-OE

Notice is required by Part 77 of the Federal Aviation Regulations (14 C.F.R. Part 77) pursuant to Section 1101 of the Federal Aviation Act of 1958, as amended (49 U.S.C. 1101). Persons who knowingly and willingly violate the Notice requirements of Part 77 are subject to a fine (criminal penalty) of not more than $500 for the first offense and not more than $2,000 for subsequent offenses, pursuant to Section 902(a) of the Federal Aviation Act of 1958, as amended (49 U.S.C. 1472 (a)).

I HEREBY CERTIFY that all of the above statements made by me are true, complete, and correct to the best of my knowledge. In addition, I agree to obstruction mark and/or light the structure in accordance with established marking & lighting standards if necessary.

Date	Typed Name/Title of Person Filing Notice	Signature
10/22/91	Kerry Varkonda, Plant Manager	Kerry Varkonda

FOR FAA USE ONLY (Attach FAA will either return this form or issue a separate acknowledgement.)

The Proposal:

☐ Does not require a notice to FAA.
☐ Is not identified as an obstruction under any standard of FAR, Part 77, Subpart C, and would not be a hazard to air navigation.
☐ Is identified as an obstruction under the standards of FAR, Part 77, Subpart C, but would not be a hazard to air navigation.
☐ Should be obstruction ☐ marked, ☐ lighted per FAA Advisory Circular 70/7460-1, Chapter(s) _____
☐ Obstruction marking and lighting are not necessary.

Supplemental Notice of Construction FAA Form 7460-2 is required any time the project is abandoned, or at least 48 hours before the start of construction, or within five days after the construction reaches its greatest height.

This determination expires on April 24, 1992

If extended, revised or terminated by the issuing office.
If the construction is subject to the licensing authority of the Federal Communications Commission and a notice of construction or alteration has not been filed with the FCC on or before the above expiration date, this determination expires on the date prescribed by the FCC for completion of construction, or on the date the FCC decides.
NOTE: Request for extension of the effective period of this determination must be submitted at least 15 days prior to the expiration date.
If the structure is subject to the licensing authority of the FCC, a copy of this form will be sent to the FCC.

Remarks: Corrects height and elevation on previously issued Aeronautical Study Number 91-ASO-1639-OE.

Signature: [illegible] Date: [illegible]

FAA Form 7460-1 (4-83) SUPERSEDES PREVIOUS EDITION

DO NOT REMOVE CARBONS

F-2

APPENDIX G

FLORIDA DEPARTMENT OF ENVIRONMENTAL REGULATION REVIEW OF THE PROPOSED MODIFICATION OF CERTIFIED ELECTRIC POWER PLANT SITE

Florida Department of Environmental Regulation

Twin Towers Office Bldg. • 2600 Blair Stone Road • Tallahassee, Florida 32399-2400

Lawton Chiles, Governor

Virginia B. Wetherell, Secretary

March 25, 1993

Mr. Robert T. Benton, II
Division of Administrative Hearings
The Desoto building
1230 Apalachee Parkway
Tallahassee, Florida 32399-1550

Re: Cedar Bay Cogeneration Project, PA 88-24A
DOAH Case No. 88-5740 EPP

Dear Mr. Benton:

Enclosed, please find a copy of the Department of Environmental Regulation's **Review of the Proposed Modification of Certified Electric Power Plant Site** for the Cedar Bay Cogeneration Project.

Sincerely,

Hamilton S. Oven

Hamilton S. Oven, P.E.
Administrator, Siting
Coordination Office

cc: All Parties

G-1

Recycled Paper
Printed with Soy Based Inks

(blank)

G-2

STATE OF FLORIDA DEPARTMENT OF ENVIRONMENTAL REGULATION

REVIEW OF PROPOSED MODIFICATION OF

CERTIFIED ELECTRIC POWER PLANT SITE

FOR

CEDAR BAY COGENERATION PROJECT

CASE NO. PA 88-24A

Siting Coordination Office

Office of the Secretary

Tallahassee, Florida

MARCH 25, 1993

G-3

(blank)

CERTIFICATE OF SERVICE

I DO HEREBY CERTIFY that a true and correct copy of the foregoing document has been sent by U.S. Mail or by Hand Delivery to the following listed persons:

Terry Cole, Esq.
Scott Shirley, Esq.
Oertel Hoffman Fernandez & Cole
P O Box 6507
Tallahassee FL 32314-6507

Lucky T. Osho, Esq.
Department of Community Affairs
2740 Centerview Dr
Tallahassee FL 32399-2100

Jim Antista, General Counsel
Florida Game & Fresh Water
Fish Commission
620 S Meridian Rd
Tallahassee FL 32399-1600

William C. Bostwick, Esq.
2034 University Blvd W
Jacksonville FL 32217-2016

Nikki Clark, Esq.
The Capitol, Rm 210
Tallahassee FL 32399-0001

Lawrence N. Curtin, Esq.
Holland & Knight
P O Drawer 810
Tallahassee FL 32302

Gregory K. Radlinski, Esq.
City of Jacksonville
600 City Hall
220 E Bay St
Jacksonville FL 32202

M.B. Adelson, IV, Esq.
Assistant General Counsel
Douglas Bldg MS-35
3900 Commonwealth Blvd
Tallahassee FL 32399-3000

Rob Vandiver, General Counsel
Mike Palecki, Chief
Bureau of Electric & Gas
Florida Public Service Comms
101 E Gaines St
Tallahassee FL 32399-0850

James A. Heard, Esq.
4741 Atlantic Blvd
Suite C
Jacksonville FL 32207

Rufus Pennington, Esq.
Margol & Pennington
76 Laura St, Suite 1702
Jacksonville FL 32202

Raymond Ehrlich, Esq.
Holland & Knight
2000 Independent Sq
Jacksonville FL 32202

Certificate of Service (continued)

Wayne E. Flowers, Esq.
General Counsel
St Johns River Water
Management District
P O Box 1429
Palatka FL 32178-1429

Gary P. Sams, Esq.
Julie B. Rome, Esq.
Hopping, Boyd, Green & Sams
P.O. Box 6526
Tallahassee FL 32314

this 25th day of March, 1993.

STATE OF FLORIDA DEPARTMENT
OF ENVIRONMENTAL REGULATION

RICHARD T. DONELAN, JR.
Assistant General Counsel

Twin Towers Office Bldg
2600 Blair Stone Rd
Tallahassee FL 32399-2400
Telephone: 904/488-9730

CEDAR BAY COGENERATION PROJECT MODIFICATION ANALYSIS

INTRODUCTION

This document is the official report and recommendation of the Department of Environmental Regulation to the Siting Board concerning proposed modifications to the conditions of site certification for the AES Cedar Bay Cogeneration Project, issued February 18, 1991, to AES Cedar Bay, Inc. (AES) and Seminole Kraft Company (SKC). By order of the Board dated June 16, 1992, a proceeding concerning modification of the certification was instituted in lieu of a proceeding to revoke the certification for the reasons stated in the Order.

The basis of the modification proceeding is a set of proposed changes to the original conditions of certification tendered by AES and SKC to the Siting Board. These changes were tentatively accepted by the Siting Board, subject to technical review and verification by the Department and other agencies having jurisdiction over the project in accordance with the procedures of the Florida Electrical Power Plant Siting Act (PPSA), §403.501 **et seq.**, Florida Statutes. Pursuant to the procedures of Section 403.508(3), Florida Statutes, the Department has evaluated the proposed modifications to the conditions of certification contained in the AES-SKC Petition for Modification dated July 7, 1992, as further refined at the suggestion of the current project manager for the Cedar Bay Cogeneration Project (CBCP), the U. S. Generating Company (USG); on March 18, 1993, an amended Petition for Modification was filed which requests formal recognition of the fact that the AES Corporation is no longer associated with the control of the CBCP, and that the name of the corporate entity which holds the certification has been changed.

Based on its review and evaluation, the Department is able to conclude that the proposed modifications sought by the holders of the site certification for the CBCP are both technically feasible and consistent with the non-procedural standards of the agencies of jurisdiction. More importantly, the Department is also able to conclude that, if the existing site certification for the CBCP is amended to incorporate the modified conditions of certification which are appended to this Report, there will be beneficial reductions in the adverse environmental impacts of the CBCP compared either to the impacts of the facility as originally certified or to the impacts expected from the continued operation of the SKC paper mill without the certified power plant. Consequently, the Department is prepared to recommend that the Siting Board impose the modified conditions of certification and allow the certificate holders to complete construction and undertake operation of the facility in accordance with the modified site certification.

In the interim since the institution of the modification proceeding, AES Cedar Bay, Inc.,the Delaware corporation which exercises primary responsibility for the construction and operation of the certified power plant has undergone a change in ownership and of name: as of December 1992, officials of the AES companies no longer exercise control of the corporation and, as of March 1993, the name of the corporation has been changed to Cedar Bay Cogeneration, Inc. The Department recommends, and the Department's recommended conditions of certification have been revised to so reflect, that the conditions of certification be modified to show the correct corporate name of the certificate holder. Such a modification will also evince official recognition that the CBCP is now under the supervision of controlling interests different from those responsible for actions which were deemed to have undermined public confidence in the site certification process.

The Department's technical evaluation of the proposed modifications is set forth below. Issues related to water and air emissions are discussed separately. Attached is a compilation containing modified conditions of certification which the Department believes are legally sufficient to implement the terms of the proposal made by the certificate holders to the Siting Board while safeguarding the public interests protected by the Power Plant Siting Act.

I. WATER ISSUES

A. The Questions of Cooling Water and Waste Water Discharge

During the original certification proceedings, the Siting Board determined that the consumptive use of potable ground water for cooling was not in the public interest and prohibited the use of water water withdrawn from the Floridan Aquifer for cooling purposes. See Condition IV C. The Board directed AES to explore the use of treated waste water or water from the St. Johns River to cool the steam condensers. After evaluating several options, in August of 1991, AES first proposed to use treated wastewater from the converted SK recycled fiber paper mill. The questions of what method of cooling the CBCP's steam turbines, and what, if any, waste water discharges were to be allowed from the CBCP were not resolved prior to the Siting Board's action to initiate the modification proceeding. Consequently, in its settlement offer, AES proposed to implement a wastewater treatment and reuse system that would require no discharge of industrial wastewater from the CBCP, while utilizing treated waste water originating from SK's process to provide cooling water for use by the CBCP and SK.

The conceptual approach to cooling water supply and wastewater treatment proposed by AES has been refined and

clarified. As currently evaluated, the CBCP water system includes a cooling tower makeup treatment system designed to treat 5500 gpm supplied from three sources: from the Seminole Kraft wastewater system, from the CBCP stormwater runoff control ponds, and from various internal, low volume waste streams (e.g. floor drains) generated by the CBCP. A conventional lime-soda water treatment system will be utilized including ferric chloride as a coagulant in conjunction with a reverse osmosis and brine concentation/crystalization system. By evaporation and solids removal, the treatment system will eliminate up to 40% of Seminole Kraft's existing wastewater discharge volume. In addition, CBCP will provide Seminole Kraft with up to 500 gpm of treated water for use in its cooling tower.

This system has several environmental benefits. It eliminates all industrial wastewater discharges from CBCP. There is no longer a need for any variance to water quality standards in order to allow operation of the facility. The elimination of up to 40% of the SK wastewater discharge because of waste water reuse will eliminate up to 40% of SK's permitted wasteload to the St. Johns River. The CBCP water treatment system will eliminate almost all potential for discharge of stormwater from their site. Stormwater will discharge only as a result of extreme rainfall events, only when the pumps from the stormwater ponds to the treatment system or emergency water storage tanks are unable to remove or retain all the excess stormwater prior to overflow. The stormwater control system is designed to prevent discharge of stormwater from the coal pile/materials storage area from rainfall events up to 50-year, 24-hour storms.

CBCP's furnishing SK with up to 500 gpm of its own treated waste water for reuse in the cooling tower reduces SK's need to use potable water, thereby further conserving this vital resource in accordance with the intent of the Siting Board's original certification decision.

In the future, if SK improves the efficiency of their recycled paper process, it may further reduce the volume of its wastewater available for use by CBCP. By the use of conservative design techniques to account for a potentially lower future volume with higher concentrations of chemical constituents, the proposed system has been configured so that it is capable of proper function even if SK reduces the volume of its wastewater. In this eventuality, the CBCP treatment system will eliminate a larger percentage of the SK discharge than currently contemplated.

The proposed CBCP cooling tower pretreatment/wastewater treatment system will produce sludges that will have to be dewatered and sent to a solid waste landfill for disposal. The CBCP water treatment system will be built to the south of the boilers on a cleared portion of the certified site.

The construction methods at the CBCP site were altered to eliminate the need to discharge water produced by dewatering of excavations. Therefore, existing conditions of certification (Condition III 12) concerning construction dewatering are superfluous and should be eliminated or modified to reflect the avoidance of dewatering discharges.

B. Conditions of Certification for Zero Discharge System

The proposed zero discharge/wastewater treatment system will eliminate a number of the discharges previously allowed by the existing conditions of certification. The elimination of the discharges reduces the adverse environmental impacts of the CBCP. The following discharge streams and their authorizing conditions should be deleted or modified:

III.A. Plant Effluents and Receiving Body of Water

2. POD - Change to Broward River only
3. Thermal Mixing Zones - Delete. No discharge.
4. Chemical Wastes - Modify. No discharge.
5. pH - Modify. Storm water only.
7. Cooling Tower Blowdown - Modify. No discharge for CBCP. Keep 7.d. re SK shut down.
8. Combined Low Volume Wastes - Modify. No discharge.
9. Metal Cleaning Wastes - Modify. No discharge.
11. Boiler Blowdown - Modify. No discharge.
12. Construction Dewatering - Modify. No discharge.
13. Mixing Zones - Delete dewatering. No discharge Modify for stormwater if needed.
14. Variances - Delete. Not needed.

The zero discharge system was presented as Phase I of a proposal for consideration of the CBCP's treating all of SK's waste water. Phase II of the proposal was made contingent upon the CBCP's obtaining from the U. S. Environmental Protection Agency an NPDES permit and a conclusion by the Department that CBCP's treatment and discharge of all of Seminole Kraft's and CBCP's wastewater would result in a net environmental benefit compared to the zero discharge system.

The Department's technical evaluation indicates that implementation of the Phase II option is not likely to result in any net environmental benefit, especially when compared to the demonstrable benefits of the zero discharge system. Evidence has been presented which discloses that the expected Phase II discharges to the St. Johns or Broward Rivers could forseeably violate water quality standards for certain metals. Discharges that violate standards are not allowable unless a variance can be granted in the public interest. The requirements for granting a variance contained in Section 403.201, F.S., can not be met since the proposed zero discharge system is practical and affordable for the CBCP. The Department does not recommend that the CBCP be required to pursue a discharge option that could result in

violations of water quality standards. The zero discharge system offers concrete environmental benefits which would not be available under the Phase II option.

II. AIR ISSUES

A. Introduction: The Question of Steam for Seminole Kraft

By deciding to make fundamental changes in the paper making process at the SK paper mill, the steam host for the CBCP, Seminole Kraft Corporation created substantial uncertainty as to the basic assumptions on which the CBCP was originally certified. During the course of the certification proceedings, SK decided to convert its mill from a Kraft pulping process, by which raw wood pulp is converted to paper by chemical treatment, to a process which makes paper from recycled cardboard boxes without the need for the kraft process. This change eliminated the need for the new chemical recovery boiler, integral to the kraft system but unnecessary for the recycled paper process, for which SK had received a construction permit in 1990 from the Department.

SK's decision to forgo the new recovery boiler eliminated its expected emissions of air pollutants and eliminated its potential demand for the use of ground water as part of chemical solutions and for cooling. However, the elimination of the new recovery boiler system, coupled with the mandated retirement of the existing SK chemical recovery boilers as a result of regulatory enforcement action, caused a substantial reduction in SK's ability to self-generate steam compared to its previous capability. In addition, five antiquated SK power boilers--three oil-fired and two bark-fired--were to be shut down to provide emission offsets necessary to allow the permitting of the proposed CBCP.

The question of what, if anything, SK intended to do regarding its self-generated steam deficit was not forthrightly addressed by the applicants during the proceedings which led to the issuance of the CBCP certification. The site certification application (SCA) stated that the CBCP would generate 225 MW of elecricity for Florida Power and Light (FPL) and supply 640,000 lb/hr of process steam for SK. SCA, p. ii. In addition, the SCA proposed the shut down of the old chemical recovery boilers and all five power boilers operated by SK to supply steam for use at the mill. Based on the record of the certification proceedings for CBCP, there was no basis for a conclusion that all SK's steam needs would not be supplied by the CBCP. Retirement of the existing power boilers at SKC, substantial air pollution sources, was expected to contribute to improvement of ambient air quality, even with the addition of the emissions of the coal-fired CBCP.

The manner in which the applicants for certification attempted to resolve the steam deficit in SK's favor was a substantial or motivating cause of the certification crisis of spring 1992. The modifications as to air emissions proposed by the certificated parties to resolve the crisis are primarily aimed at securing the fundamental assumption on which approval of the cogeneration facility rested: that the level of air emissions permitted for the CBCP would support a volume of steam sufficient both for commercial electric power generation and for commercial use by the papermill in its recycling process.

The first expedient adopted by SK to address its steam deficit was to seek Department permits allowing continued operation of its five old boilers, notwithstanding the fact that the boilers in question were required to be shut down under Condition II D of the site certification. During the investigation which culminated in the Board's order of June 16, 1992, it was disclosed that AES and SKC had entered into a contractual agreement relating to continued operation of the boilers in question after the CBCP began commercial operation. The circumstances of this disclosure had a substantial bearing on the Siting Board's May 5, 1992, vote in favor of revoking the CBCP certification.

In the Department's opinion, continued operation of the old boilers is unacceptable for two reasons. First, continued operation of the old boilers following start-up of the CBCP power plant would negate a large portion of the air quality improvements produced by the CBCP and would be directly contrary to the intent of the site certification. Second, due to the age, inefficiency, and low stack heights, the old boilers are predicted to continue contributing to violations of ambient air quality criteria. If the CBCP is not allowed to enter commercial operation because of revocation of the certification or any other reason that would relieve SK from the obligations of Condition II D, the result would be unfortunate from an environmental impact standpoint: the old boilers could continue in operation, at least until expiration of existing permits, with high emission rates, leading to possible violations of ambient air quality standards.

The option now proposed to allow SK to achieve a self-generated steam capacity deemed necessary by SK was included in the AES-SKC settlement proposal: that SK be allowed to construct three new steam boilers, fired by natural gas, each capable of producing 125,000 pounds per hour of steam. In turn, allowable emissions from the CBCP facility would be reduced compared to the originally permitted levels to match the emissions expected from the new gas-fired boilers. This plan is intended to ensure that the simultaneous operation of the new steam boilers and the CBCP will have no greater air quality impact than the the CBCP

alone was allowed under the original conditions of certification. In addition, as proposed, the plan places an enforceable ceiling on emissions from SK's forseeable future steam generation needs: a matter not addressed by the original certification.

Seminole Kraft filed applications with the Department for permits allowing them to construct the three new package boilers on November 24, 1992. The Department's review of that application should be complete prior to initiation of the April hearings on the CBCP. The Environmental Protection Agency indicated on January 15, 1993, that they had no adverse comments on the SK application.

In order to determine whether the proposed modifications actually accomplish their stated purpose, the Department has reviewed extensive technical information supplied by the certificate holders, including engineering data and computer modeling of expected air impacts from the CBCP and the new gas-fired SK boilers. In particular, the newly-performed computer modeling provides an unprecedented level of detail and scope as expected ambient and regional air impacts; the air emissions modeling previously submitted by AES in connection with the SCA do not form the basis for any technical conclusion in this report.

The Department's overall evaluation of the expected impacts of the combined emissions of air pollutants from CBCP and SK as now proposed substantiates that the improvements in ambient air quality impacts which were projected before the CBCP was certified will be attained even if SK is allowed to construct new gas-fired power boilers. Because of reductions in expected actual emissions due to implementation of new nitrogen oxide (NOX) control technology and use of lower sulfur coal at the CBPC and full-time gas usage at the new SK Boilers, actual reductions in emissions levels, compared to the originally certified project, are likely to exceed those modeled. The basis for the Department's technical conclusions is set forth below.

B. Ambient Air Quality Analysis

The Department analyzed the potential impacts of the revised CBCP/SK complex on air quality utilizing data made available through EPA-approved atmospheric dispersion modelling techniques. Use of such mathematical dispersion models allows the Department, via different computer-generated cases, to establish comparative differences in potential ambient air quality impacts caused by different plant configurations and levels of pollutant emissions. Each case has been assessed on the basis of the "worst-case scenario," that is, by assuming emissions of the maximum permitted levels of pollutants for the plant configuration under review. Further, the expected impact of each case on

overall area emissions is also judged against the backdrop of existing regional emissions based upon the maximum allowable emissions for each existing source identified in the regional inventory of individual pollutant-emitting facilities. All analyses also assume identical "worst-case" meteorological conditions. Five cases were considered.

The first two cases considered were alternative assessments of the impacts of SK's existing "old boilers." These are the three oil-fired and two bark-fired power oilers. Although these boilers are required to be shut down under the exsting certification, they are currently in operation; SK holds Department permits allowing these boilers to operate until the CBCP commences compliance testing. If the CBCP facility does not commence operation, these boilers will remain part of the status quo of permitted sources and would continue to impact air quality as allowed by existing permits. Alternative modelling analyses for these sources assumed different total annualized steam production rates for the aggregate of the five boilers: the first case assumed a rate of 640,000 lb/hr, and the second a rate of 745,000 lb/hr.

The third case examined was that of the CBCP operating under the existing conditions of certification. This analysis carried the assumption that the five SK "old boilers," having been shut down as required, were no longer in operation.

The fourth case considered was that of the CBCP, as proposed to be modified, including the operation of the new SK gas boilers. The base assumption was that the CBCP was generating electricity and supplying steam at a rate of 380,000 lb/hr to SK, with the three new SK boilers burning distillate oil or natural gas and producing 260,000 lb/hr of steam. The fifth case assumed a similar scenario, except that the three new SK boilers were assumed to be operating at a steam rate of 375,000 lb/hr. In each of these cases the "old boilers" were assumed to be inoperative.

Three comparative assessments were made:

Assessment A: Case 5 vs. Case 3

Assessment B: Case 4 vs. Case 1

Assessment C: Case 5 vs. Case 2

C. Assessment Methodology

The air quality impacts were modeled for five pollutants for which there are ambient air quality standards - sulfur dioxide/SO_2, particulate matter/PM-10, nitrogen dioxide/NO_2, carbon monoxide/CO and Lead/Pb and an aggregation of trace pollutants. Ground level concentrations were predicted for

1008 locations on a polar grid extending out ot 25 kilometers from the site. A total of 720 receptor locations were located within 3 miles of the of the two facilities.

For each Assessment (A, B, and C), three comparisons were made.

First, the maximum predicted concentrations for each pollutant were modeled. These concentrations were modeled at all receptors and for each applicable averaging periods. Concentrations at each receptor were compared between cases.

Second, the maximum predicted concentration for each applicable averaging period was identified at each receptor. Any increase or decrease in impact was noted.

Third, for each case associated with the modifications proposed for the CBCP, the total number of receptors where air quality would be improved was determined.

For Assessment B, the analysis set above was performed with the impacts of Case 1 subtracted from the impacts of Case 4. For Assessment C, the same analysis is performed with the impacts of Case 2 subtracted from the impacts of Case 5.

D. Findings

1. Case Comparison.

Assessment A (Case 5 vs. Case 3)

The maximum predicted impacts of Case 5 (revised CBCP plus new SK gas boilers at maximum steam rate) are lower than those of Case 3 (CBCP as certified). For SO2, the average net regional SO2 air quality effect of Case 5 indicates a small net improvement with Case 5 over Case 3. For all other substances except CO and annual average PM10, the average net regional air quality effect of Case 5, although not significant, is also positive.

For CO, the average net air quality effects are negative, with a minority of receptors showing improvement. However, it is important to note that the maximum CO impacts for both cases are much less than Florida's and EPA's Significant Impact Levels (SILs) for 1 hour CO and 8-hour CO concentrations.

For annual average PM10 concentrations, although the maximum concentrations are lower, the net air quality effect on a regional basis is negative. The average net effects are much less than the annual PM10 Significant Impact Level. Thus, the net effect is insignificant.

Table 2-14 (see Appendix B) displays the findings for Assessment A for SK's package boilers firing natural gas at maximum steam rate. Results are shown for CO and NO2 only, since these are the only emissions that increase in Case 5, due to the package boilers firing natural gas. On balance, the air quality impacts of the CBCP in terms of maximum impacts, as proposed to be modified, and the addition of any boilers on the SK site at the proposed capacity of 375,000 pounds per hour of steam, will be less than the air quality impacts of the CBCP as now certified, although net regional differences are small.

Assessment B (Case 4 vs. Case 1)

Tables 2-15 and 2-16 indicate that the regional net air quality effect of Case 4 (CBCP as modified plus new SK boilers at average steam rate) is positive, although not significant for all pollutants and averaging periods. This indicates that a small average net benefit to air quality over the entire model receptor grid can be expected. On balance, the air quality impacts of the CBCP, as proposed to be modified, and the addition of the three proposed boilers on SK's site necessary to provide 640,000 lb. of steam per hour for SK's use will be less than the air quality impacts of SK's future recycling operation using SK's existing boilers without the CBCP.

Assessment C (Case 5 vs. Case 2)

Tables 2-17 and 2-18 indicate that the net air quality effect of Case 5 is positive for each emission and averaging period, although not significant for some pollutants. This indicates an average net benefit to the air quality.

On balance, the air quality impacts of the CBCP, as proposed to be modified, with the addition of the new gas-fired steam boilers on the SK site at their maximum allowable emission rates, will be less than the air quality impacts of the maximum allowable emissions of SK's recycling operation with the "old boilers" as presently permitted.

2. Ambient Air Quality Standards (AAQS) Analysis

The results of the modeling for the CBCP alone, as proposed to be modified, are presented in Tables 3-24 through 3-28 for the pollutants CO, NO2, PM10, Pb, and SO2. Each table lists the maximum predicted impact of the CBCP for each applicable AAQS. The significant impact level (SIL) is also listed for the applicable pollutant. The predicted impacts for CO are below the SILs. Therefore, CO was eliminated from further consideration, since the CBCP can neither cause nor contribute to an AAQS violation for CO. Lead concentrations were also found to be insignificant.

The remaining pollutants (PM10, NO2 and SO2), were modeled for the CBCP, SK's package boilers and all the other existing and permitted sources for each pollutant in the area. Monitored background concentrations for each pollutant were added to the model's predicted concentrations to obtain the total predicted concentration. This concentration was compared to the respective AAQS. Based on this analysis, it can be concluded that the CBCP, as proposed to be modified, would neither cause nor contribute to a violation of the respective PM10, NO2, or SO2 Ambient Air Quality Standards.

The CBCP also emits volatile organic compounds (VOC), which can be precursors to ozone formation. There are no acceptable modeling techniques for assessing an individual source's impact on ozone levels due to uncertainties concerning the photochemical processes for ozone formation. Accordingly, no single source modeling is required by either EPA or DER. Under any circumstances, however, no significant impact on ozone concentrations from the CBCP is expected since the VOC emissions of the CBCP will be more than offset by shutdown of the SK "old boilers," which are current VOC sources of significance.

3. Increment Consumption Analysis

The results of the maximum predicted SO2 Class I and Class II Prevention of Significant Deterioration (PSD) increments consumed by the CBCP itself were evaluated. The maximum SO2 impacts of the CBCP by itself exceed neither the Class I nor Class II allowable increments.

An analysis was performed to identify the maximum total Class II increment consumption by all PSD increment consuming and expanding sources (including SK's package boilers as increment consuming sources) to which the CBCP would contribute more than the Class II SILs. None of the total concentrations exceeds the Class II PSD increments, where the CBCP has a significant impact. Thus, it can be concluded that the CBCP, as proposed to be modified, would neither cause nor contribute to a violation of the PSD Class II SO2 increments.

For the Class I area, the total SO2 increment consumption due to all increment consuming and expanding sources was identified for each averaging period, modeled year and Class I area (Wolf Island Wilderness Area and Okefenokee Wilderness Area). Based on these results, it can be concluded that the CBCP, as proposed to be modified, would neither cause nor contribute to a violation of the Class I SO2 increments.

A similar analysis was performed for Total Suspended Particulates/PM10/(TSP). None of the total concentrations exceed the Class I or Class II PSD TSP increments. Thus, it can be concluded that the CBCP, as proposed to be modified, would neither cause nor contribute to a violation of the PSD Class I or Class II TSP increments.

A similar analysis was performed for NO2. None of the total concentrations exceed the Class I or Class II PSD NO2 increments. Thus, it can be concluded that the CBCP, as proposed to be modified, would neither cause nor contribute to a violation of the PSD Class I or Class II NO2 increments.

4. Air Toxics Analysis

The air toxics emissions from the CBCP, by itself, as proposed to be modified, were modeled to determine the maximum impact of each pollutant for each averaging period for which a draft No Threat Level (NTL) has been proposed. The results were evaluated. In each case the impacts are below the draft NTLs.

The Department has been working with EPA and their consultant to have a risk assessment made for emissions from the CBCP. The results of that study are not yet available. Preliminary indications are that due to the shut down of pulp mill sources, the CBCP will have a negligible impact on human health. By replacing SK's bark and power boilers, the CBCP and SK package boilers may provide a slight net health benefit since the cancer risks of the CBCP plus package boilers are less than the risks posed by the existing SK facility.

A preliminary ecological risk assessment indicates that the revised CBCP and SK package boilers will not pose a potential risk to aquatic or terrestrial environments. Due to the elimination of heavy oil containing vanadium from the old SK power boilers, the revised facility will likely present less of an ecological risk than the old pulp mill.

5. Supplemental Analyses

A. Impact of Secondary Emissions -

No significant adverse air quality impacts are expected from secondary emissions associated with any residential, commercial, or industrial growth directly related to the construction or operation of the CBCP.

B. Impacts of the CBCP on Soils and Vegetation -

Comparisons were made of the combined impacts of the CBCP and SK's package boilers with those of SK's existing power and bark boilers in future recycle operation. Those comparisons clearly showed that there would be a net regional improvement

in maximum concentrations of SO2, NO2 and CO. Since SK's power and bark boilers are to be retired when the CBCP begins operation, and since the conversion to recycles paper eliminates the chemical recovery boilers, smelt dissolving tanks and lime kilns, it can be concluded that the impacts (if any) of these substances on vegetation will be decreased.

C. Visibility Assessment -

The emissions from the proposed facility were shown to have an insignificant impact on visibility at both the Okefenokee and Wolf Island Class I areas. The potential for a visible plume from the CBCP is expected to be localized (within 5 km) and occur only under light wind, neutral dispersion conditions which occur primarily during early daylight hours.

D. CBCP Cooling Tower Impact Analysis -

The potential for fogging or icing conditions on nearby routes to be caused by the CBCP's cooling towers and salt deposition rates due to cooling tower operations was evaluated. The applicant used the SACTI (Season and Annual Cooling Tower Impacts) model to make this evaluation. The analysis indicates that, based on the low probabilities predicted by the SACTI model, the visibility reduction due to the CBCP's cooling tower is not expected to pose a threat to local transportation routes. The effects of salt deposition on local vegetation is not expected to be significant.

E. Screening Modeling Analysis for Low Load CFB Operation

A screening modeling analysis was conducted to compare four operating scenarios for the CBCP's CFBs. The purpose of this analysis is to evaluate the potential for CBCP operation at low load conditions to cause higher total ambient impacts than operation at maximum load. The load conditions modeled were 100%, 67%, 40%, and 17% of full load.

The results of the ISC modeling analysis for each meteorological condition and load case demonstrate that the maximum normalized concentrations predicted for each meteorological condition are generally (in 25 of 33 meteorological conditions analyzed or 76%) associated with the 100% load case.

Since the modeling analysis shows that the low-load operation of the CBCP's CFBs would not increase the impact of the CFBs within 0.8 km, well beyond the location of the CBCP's peak effect on ambient air quality, it is clear that the low-load operation would not affect the estimation of that peak effect. Therefore, lower loads do not warrant additional analysis as they have no bearing on modeling results for critical parameters. This analysis supports the request for

deletion of the furnace load operating limitation in Condition II.A.8.9.b.

The results of the assessments show that the proposed modifications to CBCP plus the new boilers at SK result in less adverse air quality impacts than SK originally, and less adverse impacts than CBCP originally. When evaluating the air quality impacts of the proposed SK boilers, the sulfur content of the oil to be used was assumed to be 0.5% as a maximum and 0.3% on an annual average. A current BACT analysis of oil to be used by SK in the steam boilers or by USG in the CBCP facility would result in a requirement to use distillate oil with a 0.05% sulfur content. The modeling analysis for SO_2 in Cases 4 and 5 is therefore conservative. Future ambient SO_2 levels will be significantly less than predicted.

The modeling analysis supports the requested modifications relating to deletion of conditions prescribing load operational ranges and more frequent use of oil during the first year of operation of the CBCP.

Conclusion and Recommendation

The proposed modifications of the CBCP will reduce the air and water quality impacts of the previously certified facility. The modifications relating to use of treated wastewater from Seminole Kraft satisfies the findings of the Siting Board that a source of cooling water be secured that would eliminate the use of potable water from the Floridan Aquifer. The implementation of the zero-discharge system would eliminate the discharge of industrial wastewater from CBCP and will reduce SK discharges. This benefits the environment by reducing or eliminating the pollutants in those waste streams from the environment. Zero-discharge minimizes the adverse impacts of water discharges to the maximum extent possible.

Accordingly the Department recommends that the revised Cedar Bay Cogeneration Project with its associated facilities be approved subject to the modified Conditions of Certification set forth in Appendix A.

Virginia B. Wetherell

VIRGINIA B. WETHERELL
Secretary

APPENDIX A

CONDITIONS OF CERTIFICATION

(The Conditions of Certification included in this "Appendix A" were dated 3/24/93; the Conditions were updated subsequent to this. Therefore, the 3/24/93 Conditions are not included here; they are available on request from Heinz Mueller, Chief Environmental Policy Section; FAB-4; U.S. EPA Region IV; 345 Courtland Street, NE; Atlanta, Georgia 30365.)

See Appendix B

(blank)

APPENDIX H

STORMWATER

UNITED STATES ENVIRONMENTAL PROTECTION AGENCY

REGION IV

345 COURTLAND STREET, N.E.
ATLANTA, GEORGIA 30365

JUL 22 1992

CERTIFIED MAIL
RETURN RECEIPT REQUESTED

REF: 4WM-WPEB

Mr. Paul Stinson
Project Manager
AES/Cedar Bay, Inc.
9469 Eastport Road
P.O. Box 26329
Jacksonville, Florida 32218-0329

RE: Final Issuance of NPDES Permit No. FL0041173
Cedar Bay Cogeneration Project

Dear Mr. Stinson:

Enclosed is the National Pollutant Discharge Elimination System (NPDES) permit for the above-referenced facility. This action constitutes the Environmental Protection Agency's final permit decision in accordance with Title 40, Code of Federal Regulations (C.F.R.) Section 124.15(a). The permit will become effective as specified, provided that no timely request for an evidentiary hearing is received by the Agency.

Any interested person may contest this decision by submitting a timely request for an evidentiary hearing (hearing) pursuant to the procedures at 40 C.F.R. § 124.74. If a request for a hearing is received by the Agency, following review, a determination will be made and the requester advised of the Agency's decision on the request. Until that time, please be advised that any request will render the permit ineffective pursuant to 40 C.F.R. § 124.15(b). For a new source, a new discharger, a recommencing discharger, or a facility for which an untimely permit renewal application was submitted, a hearing request renders the facility without an NPDES permit and the facility may not discharge (unless relief is granted by the Presiding Officer under 40 C.F.R. § 124.60(a)).

If the evidentiary hearing request is granted, in whole or part, to an existing source, the effect of the contested provision(s), and any other conditions not severable from those conditions, will be stayed and not subject to judicial review pending final Agency action. In this case, all provisions of the prior permit, as well as, all uncontested provisions of the reissued permit shall continue fully enforceable and effective pending final Agency action on the permit appeal. See 40 C.F.R. § 124.60.

H-1

Printed on Recycled Paper

To request an evidentiary hearing under 40 C.F.R. § 124.74, you must submit an original and two copies of the request to the Regional Hearing Clerk at the letterhead address within thirty (30) days from service of this notice. A copy of the procedures and requirements for evidentiary hearing requests and appeals to the Administrator is enclosed.

For purposes of judicial review under the Clean Water Act, 33 U.S.C. § 1251 et seq., final Agency action on a permit does not occur unless and until a party has exhausted its administrative remedies as required by 40 C.F.R. Part 124.

Further information on procedures pertaining to the filing of an evidentiary hearing request or other legal matters may be obtained by contacting Kevin B. Smith, Assistant Regional Counsel at (404) 347-3777.

Sincerely yours,

R J McGhee for

W. Ray Cunningham, Director
Water Management Division

Enclosures (4): Evidentiary Hearing Procedures
Final NPDES Permit
Amendment to Fact Sheet
Discharge Monitoring Report Form and Instructions

cc: Florida DER (with all enclosures, except Evid. Hearing Procedures)

Subpart E—Evidentiary Hearings for EPA-Issued NPDES Permits and EPA-Terminated RCRA Permits

§ 124.71 Applicability.

(a) The regulations in this subpart govern all formal hearings conducted by EPA under CWA sections 402 and 405(f), except those conducted under Subpart F. They also govern all evidentiary hearings conducted under RCRA section 3008 in connection with the termination of a RCRA permit. This includes termination of interim status for failure to furnish information needed to make a final decision. A formal hearing is available to challenge any NPDES permit issued under § 124.15 except for a general permit. Persons affected by a general permit may not challenge the conditions of a general permit as of right in further agency proceedings. They may instead either challenge the general permit in court, or apply for an individual NPDES permit under § 122.21 as authorized in § 122.28 and then request a formal hearing on the issuance or denial of an individual permit. (The Regional Administrator also has the discretion to use the procedures of Subpart F for general permits. See § 124.111).

(b) In certain cases, evidentiary hearings under this subpart may also be held on the conditions of UIC permits, or of RCRA permits which are being issued, modified, or revoked and reissued, rather than terminated or suspended. This will occur when the conditions of the UIC or RCRA permit in question are closely linked with the conditions of an NPDES permit as to

which an evidentiary hearing has been granted. See § 124.74(b)(2). Any interested person may challenge the Regional Administrator's initial new source determination by requesting an evidentiary hearing under this part. See § 122.29.

(c) PSD permits may never be subject to an evidentiary hearing under this subpart. Section 124.74(b)(2)(iv) provides only for consolidation of PSD permits with other permits subject to a panel hearing under Subpart F.

[48 FR 14264, Apr. 1, 1983, as amended at 54 FR 18786, May 2, 1989]

§ 124.72 Definitions.

For the purpose of this subpart, the following definitions are applicable:

"Hearing Clerk" means The Hearing Clerk, U.S. Environmental Protection Agency, 401 M Street, SW., Washington, DC, 20460.

"Judicial Officer" means a permanent or temporary employee of the Agency appointed as a Judicial Officer by the Administrator under these regulations and subject to the following conditions:

(a) A Judicial Officer shall be a licensed attorney. A Judicial Officer shall not be employed in the Office of Enforcement or the Office of Water and Waste Management, and shall not participate in the consideration or decision of any case in which he or she performed investigative or prosecutorial functions, or which is factually related to such a case.

(b) The Administrator may delegate any authority to act in an appeal of a given case under this subpart to a Judicial Officer who, in addition, may perform other duties for EPA, provided that the delegation shall not preclude a Judicial Officer from referring any motion or case to the Administrator when the Judicial Officer decides such action would be appropriate. The Administrator, in deciding a case, may consult with and assign the drafting of preliminary findings of fact and conclusions and/or a preliminary decision to any Judicial Officer.

"Party" means the EPA trial staff under § 124.78 and any person whose request for a hearing under § 124.74 or whose request to be admitted as a party or to intervene under § 124.79 or § 124.117 has been granted.

"Presiding Officer" for the purposes of this subpart means an Administrative Law Judge appointed under 5 U.S.C. 3105 and designated to preside at the hearing. Under Subpart F other persons may also serve as hearing officers. See § 124.119.

"Regional Hearing Clerk" means an employee of the Agency designated by a Regional Administrator to establish a repository for all books, records, documents, and other materials relating to hearings under this subpart.

§ 124.73 Filing and submission of documents.

(a) All submissions authorized or required to be filed with the Agency under this subpart shall be filed with the Regional Hearing Clerk, unless otherwise provided by regulation. Submissions shall be considered filed on the date on which they are mailed or delivered in person to the Regional Hearing Clerk.

(b) All submissions shall be signed by the person making the submission, or by an attorney or other authorized agent or representative.

(c)(1) All data and information referred to or in any way relied upon in any submission shall be included in full and may not be incorporated by reference, unless previously submitted as part of the administrative record in the same proceeding. This requirement does not apply to State or Federal statutes and regulations, judicial decisions published in a national reporter system, officially issued EPA documents of general applicability, and any other generally available reference material which may be incorporated by reference. Any party incorporating materials by reference shall provide copies upon request by the Regional Administrator or the Presiding Officer.

(2) If any part of the material submitted is in a foreign language, it shall be accompanied by an English translation verified under oath to be complete and accurate, together with the name, address, and a brief statement of the qualifications of the person making the translation. Translations

of literature or other material in a foreign language shall be accompanied by copies of the original publication.

(3) Where relevant data or information is contained in a document also containing irrelevant matter, either the irrelevant matter shall be deleted or the relevant portions shall be indicated.

(4) Failure to comply with the requirements of this section or any other requirement in this subpart may result in the noncomplying portions of the submission being excluded from consideration. If the Regional Administrator or the Presiding Officer, on motion by any party or *sua sponte*, determines that a submission fails to meet any requirement of this Subpart, the Regional Administrator or Presiding Officer shall direct the Regional Hearing Clerk to return the submission, together with a reference to the applicable regulations. A party whose materials have been rejected has 14 days to correct the errors and resubmit, unless the Regional Administrator or the Presiding Officer finds good cause to allow a longer time.

(d) The filing of a submission shall not mean or imply that it in fact meets all applicable requirements or that it contains reasonable grounds for the action requested or that the action requested is in accordance with law.

(e) The original of all statements and documents containing factual material, data, or other information shall be signed in ink and shall state the name, address, and the representative capacity of the person making the submission.

§ 124.74 Requests for evidentiary hearing.

(a) Within 30 days following the service of notice of the Regional Administrator's final permit decision under § 124.15, any interested person may submit a request to the Regional Administrator under paragraph (b) of this section for an evidentiary hearing to reconsider or contest that decision. If such a request is submitted by a person other than the permittee, the person shall simultaneously serve a copy of the request on the permittee.

(b)(1) In accordance with § 124.76, such requests shall state each legal or factual question alleged to be at issue, and their relevance to the permit decision, together with a designation of the specific factual areas to be adjudicated and the hearing time estimated to be necessary for adjudication. Information supporting the request or other written documents relied upon to support the request shall be submitted as required by § 124.73 unless they are already part of the administrative record required by § 124.18.

NOTE: This paragraph allows the submission of requests for evidentiary hearings even though both legal and factual issues may be raised, or only legal issues may be raised. In the latter case, because no factual issues were raised, the Regional Administrator would be required to deny the request. However, on review of the denial the Administrator is authorized by § 124.91(a)(1) to review policy or legal conclusions of the Regional Administrator. EPA is requiring an appeal to the Administrator even of purely legal issues involved in a permit decision to ensure that the Administrator will have an opportunity to review any permit before it will be final and subject to judicial review.

(2) Persons requesting an evidentiary hearing on an NPDES permit under this section may also request an evidentiary hearing on a RCRA or UIC permit. PSD permits may never be made part of an evidentiary hearing under Subpart E. This request is subject to all the requirements of paragraph (b)(1) of this section and in addition will be granted only if:

(i) Processing of the RCRA or UIC permit at issue was consolidated with the processing of the NPDES permit as provided in § 124.4;

(ii) The standards for granting a hearing on the NPDES permit are met;

(iii) The resolution of the NPDES permit issues is likely to make necessary or appropriate modification of the RCRA or UIC permit; and

(iv) If a PSD permit is involved, a permittee who is eligible for an evidentiary hearing under Subpart E on his or her NPDES permit requests that the formal hearing be conducted under the procedures of Subpart F and the Regional Administrator finds that consolidation is unlikly to delay final permit issuance beyond the PSD one-year statutory deadline.

(c) These requests shall also contain:

(1) The name, mailing address, and telephone number of the person making such request;

(2) A clear and concise factual statement of the nature and scope of the interest of the requester;

(3) The names and addresses of all persons whom the requester represents; and

(4) A statement by the requester that, upon motion of any party granted by the Presiding Officer, or upon order of the Presiding Officer *sua sponte* without cost or expense to any other party, the requester shall make available to appear and testify, the following:

(i) The requester;

(ii) All persons represented by the requester; and

(iii) All officers, directors, employees, consultants, and agents of the requester and the persons represented by the requester.

(5) Specific references to the contested permit conditions, as well as suggested revised or alternative permit conditions (including permit denials) which, in the judgment of the requester, would be required to implement the purposes and policies of the CWA.

(6) In the case of challenges to the application of control or treatment technologies identified in the statement of basis or fact sheet, identification of the basis for the objection, and the alternative technologies or combination of technologies which the requester believes are necessary to meet the requirements of the CWA.

(7) Identification of the permit obligations that are contested or are inseverable from contested conditions and should be stayed if the request is granted by reference to the particular contested conditions warranting the stay.

(8) Hearing requests also may ask that a formal hearing be held under the procedures set forth in Subpart F. An applicant may make such a request even if the proceeding does not constitute "initial licensing" as defined in § 124.111.

(d) If the Regional Administrator grants an evidentiary hearing request, in whole or in part, the Regional Administrator shall identify the permit conditions which have been contested by the requester and for which the evidentiary hearing has been granted. Permit conditions which are not contested or for which the Regional Administrator has denied the hearing request shall not be affected by, or considered at, the evidentiary hearing. The Regional Administrator shall specify these conditions in writing in accordance with § 124.60(c).

(e) The Regional Administrator must grant or deny all requests for an evidentiary hearing on a particular permit. All requests that are granted for a particular permit shall be combined in a single evidentiary hearing.

(f) The Regional Administrator (upon notice to all persons who have already submitted hearing requests) may extend the time allowed for submitting hearing requests under this section for good cause.

§ 124.75 Decision on request for a hearing.

(a)(1) Within 30 days following the expiration of the time allowed by § 124.74 for submitting an evidentiary hearing request, the Regional Administrator shall decide the extent to which, if at all, the request shall be granted, provided that the request conforms to the requirements of § 124.74, and sets forth material issues of fact relevant to the issuance of the permit.

(2) When an NPDES permit for which a hearing request has been granted constitutes "initial licensing" under § 124.111, the Regional Administrator may elect to hold a formal hearing under the procedures of Subpart F rather than under the procedures of this subpart even if no person has requested that Subpart F be applied. If the Regional Administrator makes such a decision, he or she shall issue a notice of hearing under § 124.116. All subsequent proceedings shall then be governed by §§ 124.117 through 124.121, except that any reference to a draft permit shall mean the final permit.

(3) Whenever the Regional Administrator grants a request made under § 124.74(c)(8) for a formal hearing under Subpart F on an NPDES permit that does not constitute an initial li

cense under § 124.111, the Regional Administrator shall issue a notice of hearing under § 124.116 including a statement, that the permit will be processed under the procedures of Subpart F unless a written objection is received within 30 days. If no valid objection is received, the application shall be processed in accordance with §§ 124.117 through 124.121, except that any reference to a draft permit shall mean the final permit. If a valid objection is received, this subpart shall be applied instead.

(b) If a request for a hearing is denied in whole or in part, the Regional Administrator shall briefly state the reasons. That denial is subject to review by the Administrator under § 124.91.

§ 124.76 Obligation to submit evidence and raise issues before a final permit is issued.

In any case where the Regional Administrator elected to apply the requirements of § 124.14(a), no evidence shall be submitted by any party to a hearing under this Subpart that was not submitted to the administrative record required by § 124.18 as part of the preparation of and comment on a draft permit, unless good cause is shown for the failure to submit it. No issues shall be raised by any party that were not submitted to the administrative record required by § 124.18 as part of the preparation of and comment on a draft permit unless good cause is shown for the failure to submit them. Good cause includes the case where the party seeking to raise the new issues or introduce new information shows that it could not reasonably have ascertained the issues or made the information available within the time required by § 124.18; or that it could not have reasonably anticipated the relevance or materiality of the information sought to be introduced. Good cause exists for the introduction of data available on operation authorized under § 124.60(a)(2).

(49 FR 38051, Sept. 26, 1984)

§ 124.77 Notice of hearing.

Public notice of the grant of an evidentiary hearing regarding a permit shall be given as provided in § 124.57(b) and by mailing a copy to all persons who commented on the draft permit, testified at the public hearing, or submitted a request for a hearing. Before the issuance of the notice, the Regional Administrator shall designate the Agency trial staff and the members of the decisional body (as defined in § 124.78).

§ 124.78 Ex parte communications.

(a) For purposes of this section, the following definitions shall apply:

(1) "Agency trial staff" means those Agency employees, whether temporary or permanent, who have been designated by the Agency under § 124.77 or § 124.116 as available to investigate, litigate, and present the evidence, arguments, and position of the Agency in the evidentiary hearing or nonadversary panel hearing. Any EPA employee, consultant, or contractor who is called as a witness by EPA trial staff, or who assisted in the formulation of the draft permit which is the subject of the hearing, shall be designated as a member of the Agency trial staff;

(2) "Decisional body" means any Agency employee who is or may reasonably be expected to be involved in the decisional process of the proceeding including the Administrator, Judicial Officer, Presiding Officer, the Regional Administrator (if he or she does not designate himself or herself as a member of the Agency trial staff), and any of their staff participating in the decisional process. In the case of a nonadversary panel hearing, the decisional body shall also include the panel members, whether or not permanently employed by the Agency;

(3) "*Ex parte* communication" means any communication, written or oral, relating to the merits of the proceeding between the decisional body and an interested person outside the Agency or the Agency trial staff which was not originally filed or stated in the administrative record or in the hearing. *Ex parte* communications do not include:

(i) Communications between Agency employees other than between the Agency trial staff and the members of the decisional body;

(ii) Discussions between the decisional body and either:

(A) Interested persons outside the Agency, or

(B) The Agency trial staff, if all parties have received prior written notice of the proposed communications and have been given the opportunity to be present and participate therein.

(4) "Interested person outside the Agency" includes the permit applicant, any person who filed written comments in the proceeding, any person who requested the hearing, any person who requested to participate or intervene in the hearing, any participant in the hearing and any other interested person not employed by the Agency at the time of the communications, and any attorney of record for those persons.

(b)(1) No interested person outside the Agency or member of the Agency trial staff shall make or knowingly cause to be made to any members of the decisional body, an *ex parte* communication on the merits of the proceedings.

(2) No member of the decisional body shall make or knowingly cause to be made to any interested person outside the Agency or member of the Agency trial staff, an *ex parte* communication on the merits of the proceedings.

(3) A member of the decisional body who receives or who makes or who knowingly causes to be made a communication prohibited by this subsection shall file with the Regional Hearing Clerk all written communications or memoranda stating the substance of all oral communications together with all written responses and memoranda stating the substance of all oral responses.

(c) Whenever any member of the decisionmaking body receives an *ex parte* communication knowingly made or knowingly caused to be made by a party or representative of a party in violation of this section, the person presiding at the stage of the hearing then in progress may, to the extent consistent with justice and the policy of the CWA, require the party to show cause why its claim or interest in the proceedings should not be dismissed, denied, disregarded, or otherwise adversely affected on account of such violation.

(d) The prohibitions of this section begin to apply upon issuance of the notice of the grant of a hearing under § 124.77 or § 124.116. This prohibition terminates at the date of final agency action.

(48 FR 14264, Apr. 1, 1983, as amended at 49 FR 38052, Sept. 26, 1984)

§ 124.79 Additional parties and issues.

(a) Any person may submit a request to be admitted as a party within 15 days after the date of mailing, publication, or posting of notice of the grant of an evidentiary hearing, whichever occurs last. The Presiding Officer shall grant requests that meet the requirements of §§ 124.74 and 124.76.

(b) After the expiration of the time prescribed in paragraph (a) of this section any person may file a motion for leave to intervene as a party. This motion must meet the requirements of §§ 124.74 and 124.76 and set forth the grounds for the proposed intervention. No factual or legal issues, besides those raised by timely hearing requests, may be proposed except for good cause. A motion for leave to intervene must also contain a verified statement showing good cause for the failure to file a timely request to be admitted as a party. The Presiding Officer shall grant the motion only upon an express finding on the record that:

(1) Extraordinary circumstances justify granting the motion;

(2) The intervener has consented to be bound by:

(i) Prior written agreements and stipulations by and between the existing parties; and

(ii) All orders previously entered in the proceedings; and

(3) Intervention will not cause undue delay or prejudice the rights of the existing parties.

§ 124.80 Filing and service.

(a) An original and one (1) copy of all written submissions relating to an evidentiary hearing filed after the notice is published shall be filed with the Regional Hearing Clerk.

(b) The party filing any submission shall also serve a copy of each submis-

sion upon the Presiding Officer and each party of record. Service shall be by mail or personal delivery.

(c) Every submission shall be accompanied by an acknowledgment of service by the person served or a certificate of service citing the date, place, time, and manner of service and the names of the persons served.

(d) The Regional Hearing Clerk shall maintain and furnish a list containing the name, service address, and telephone number of all parties and their attorneys or duly authorized representatives to any person upon request.

§ 124.81 Assignment of Administrative Law Judge.

No later than the date of mailing, publication, or posting of the notice of a grant of an evidentiary hearing, whichever occurs last, the Regional Administrator shall refer the proceeding to the Chief Administrative Law Judge who shall assign an Administrative Law Judge to serve as Presiding Officer for the hearing.

§ 124.82 Consolidation and severance.

(a) The Administrator, Regional Administrator, or Presiding Officer has the discretion to consolidate, in whole or in part, two or more proceedings to be held under this subpart, whenever it appears that a joint hearing on any or all of the matters in issue would expedite or simplify consideration of the issues and that no party would be prejudiced thereby. Consolidation shall not affect the right of any party to raise issues that might have been raised had there been no consolidation.

(b) If the Presiding Officer determines consolidation is not conducive to an expeditious, full, and fair hearing, any party or issues may be severed and heard in a separate proceeding.

§ 124.83 Prehearing conferences.

(a) The Presiding Officer, *sua sponte*, or at the request of any party, may direct the parties or their attorneys or duly authorized representatives to appear at a specified time and place for one or more conferences before or during a hearing, or to submit written proposals or correspond for the purpose of considering any of the matters set forth in paragraph (c) of this section.

(b) The Presiding Officer shall allow a reasonable period before the hearing begins for the orderly completion of all prehearing procedures and for the submission and disposition of all prehearing motions. Where the circumstances warrant, the Presiding Officer may call a prehearing conference to inquire into the use of available procedures contemplated by the parties and the time required for their completion, to establish a schedule for their completion, and to set a tentative date for beginning the hearing.

(c) In conferences held, or in suggestions submitted, under paragraph (a) of this section, the following matter may be considered:

(1) Simplification, clarification, amplification, or limitation of the issues.

(2) Admission of facts and of the genuineness of documents, and stipulations of facts.

(3) Objections to the introduction into evidence at the hearing of any written testimony, documents, papers, exhibits, or other submissions proposed by a party, except that the administrative record required by § 124.19 shall be received in evidence subject to the provisions of § 124.85(d)(2). At any time before the end of the hearing any party may make, and the Presiding Officer shall consider and rule upon, motions to strike testimony or other evidence other than the administrative record on the grounds of relevance, competency, or materiality.

(4) Matters subject to official notice may be taken.

(5) Scheduling as many of the following as are deemed necessary and proper by the Presiding Officer:

(i) Submission of narrative statements of position on each factual issue in controversy;

(ii) Submission of written testimony and documentary evidence (e.g., affidavits, data, studies, reports, and any other type of written material) in support of those statements; or

(iii) Requests by any party for the production of additional documentation, data, or other information relevant and material to the facts in issue.

(6) Grouping participants with substantially similar interests to eliminate redundant evidence, motions, and objections.

(7) Such other matters that may expedite the hearing or aid in the disposition of the matter.

(d) At a prehearing conference or at some other reasonable time set by the Presiding Officer, each party shall make available to all other parties the names of the expert and other witnesses it expects to call. At its discretion or at the request of the Presiding Officer, a party may include a brief narrative summary of any witness's anticipated testimony. Copies of any written testimony, documents, papers, exhibits, or materials which a party expects to introduce into evidence, and the administrative record required by § 124.18 shall be marked for identification as ordered by the Presiding Officer. Witnesses, proposed written testimony, and other evidence may be added or amended upon order of the Presiding Officer for good cause shown. Agency employees and consultants shall be made available as witnesses by the Agency to the same extent that production of such witnesses is required of other parties under § 124.74(c)(4). (See also § 124.85(b)(16).)

(e) The Presiding Officer shall prepare a written prehearing order reciting the actions taken at each prehearing conference and setting forth the schedule for the hearing, unless a transcript has been taken and accurately reflects these matters. The order shall include a written statement of the areas of factual agreement and disagreement and of the methods and procedures to be used in developing the evidence and the respective duties of the parties in connection therewith. This order shall control the subsequent course of the hearing unless modified by the Presiding Officer for good cause shown.

§ 124.84 Summary determination.

(a) Any party to an evidentiary hearing may move with or without supporting affidavits and briefs for a summary determination in its favor upon any of the issues being adjudicated on the basis that there is no genuine issue of material fact for determination. This motion shall be filed at least 45 days before the date set for the hearing, except that upon good cause shown the motion may be filed at any time before the close of the hearing.

(b) Any other party may, within 30 days after service of the motion, file and serve a response to it or a countermotion for summary determination. When a motion for summary determination is made and supported, a party opposing the motion may not rest upon mere allegations or denials but must show, by affidavit or by other materials subject to consideration by the Presiding Officer, that there is a genuine issue of material fact for determination at the hearing.

(c) Affidavits shall be made on personal knowledge, shall set forth facts that would be admissible in evidence, and shall show affirmatively that the affiant is competent to testify to the matters stated therein.

(d) The Presiding Officer may set the matter for oral argument and call for the submission of proposed findings, conclusions, briefs, or memoranda of law. The Presiding Officer shall rule on the motion not more than 30 days after the date responses to the motion are filed under paragraph (b) of this section.

(e) If all factual issues are decided by summary determination, no hearing will be held and the Presiding Officer shall prepare an initial decision under § 124.89. If summary determination is denied or if partial summary determination is granted, the Presiding Officer shall issue a memorandum opinion and order, interlocutory in character, and the hearing will proceed on the remaining issues. Appeals from interlocutory rulings are governed by § 124.90.

(f) Should it appear from the affidavits of a party opposing a motion for summary determination that he or she cannot for reasons stated present, by affidavit or otherwise, facts essential to justify his or her opposition, the Presiding Officer may deny the motion or order a continuance to allow additional affidavits or other information to be obtained or may make such other order as is just and proper.

§ 124.85 Hearing procedure.

(a)(1) The permit applicant always bears the burden of persuading the Agency that a permit authorizing pollutants to be discharged should be issued and not denied. This burden does not shift.

NOTE: In many cases the documents contained in the administrative record, in particular the fact sheet or statement of basis and the response to comments, should adequately discharge this burden.

(2) The Agency has the burden of going forward to present an affirmative case in support of any challenged condition of a final permit.

(3) Any hearing participant who, by raising material issues of fact, contends:

(i) That particular conditions or requirements in the permit are improper or invalid, and who desires either:

(A) The inclusion of new or different conditions or requirements; or

(B) The deletion of those conditions or requirements; or

(ii) That the denial or issuance of a permit is otherwise improper or invalid, shall have the burden of going forward to present an affirmative case at the conclusion of the Agency case on the challenged requirement.

(b) The Presiding Officer shall conduct a fair and impartial hearing, take action to avoid unnecessary delay in the disposition of the proceedings, and maintain order. For these purposes, the Presiding Officer may:

(1) Arrange and issue notice of the date, time, and place of hearings and conferences;

(2) Establish the methods and procedures to be used in the development of the evidence;

(3) Prepare, after considering the views of the participants, written statements of areas of factual disagreement among the participants;

(4) Hold conferences to settle, simplify, determine, or strike any of the issues in a hearing, or to consider other matters that may facilitate the expeditious disposition of the hearing;

(5) Administer oaths and affirmations;

(6) Regulate the course of the hearing and govern the conduct of participants;

(7) Examine witnesses;

(8) Identify and refer issues for interlocutory decision under § 124.90;

(9) Rule on, admit, exclude, or limit evidence;

(10) Establish the time for filing motions, testimony, and other written evidence, briefs, findings, and other submissions;

(11) Rule on motions and other procedural matters pending before him, including but not limited to motions for summary determination in accordance with § 124.84;

(12) Order that the hearing be conducted in stages whenever the number of parties is large or the issues are numerous and complex;

(13) Take any action not inconsistent with the provisions of this subpart for the maintenance of order at the hearing and for the expeditious, fair, and impartial conduct of the proceeding;

(14) Provide for the testimony of opposing witnesses to be heard simultaneously or for such witnesses to meet outside the hearing to resolve or isolate issues or conflicts;

(15) Order that trade secrets be treated as confidential business information in accordance with §§ 122.7 (NPDES) and 270.12 (RCRA) and 40 CFR Part 2; and

(16) Allow such cross-examination as may be required for a full and true disclosure of the facts. No cross-examination shall be allowed on questions of policy except to the extent required to disclose the factual basis for permit requirements, or on questions of law, or regarding matters (such as the validity of effluent limitations guidelines) that are not subject to challenge in an evidentiary hearing. No Agency witnesses shall be required to testify or be made available for cross-examination on such matters. In deciding whether or not to allow cross-examination, the Presiding Officer shall consider the likelihood of clarifying or resolving a disputed issue of material fact compared to other available methods. The party seeking cross-examination has the burden of demonstrating that this standard has been met.

(c) All direct and rebuttal evidence at an evidentiary hearing shall be submitted in written form, unless, upon motion and good cause shown, the

Presiding Officer determines that oral presentation of the evidence on any particular fact will materially assist in the efficient identification and clarification of the issues. Written testimony shall be prepared in narrative form.

(d)(1) The Presiding Officer shall admit all relevant, competent, and material evidence, except evidence that is unduly repetitious. Evidence may be received at any hearing even though inadmissible under the rules of evidence applicable to judicial proceedings. The weight to be given evidence shall be determined by its reliability and probative value.

(2) The administrative record required by § 124.18 shall be admitted and received in evidence. Upon motion by any party the Presiding Officer may direct that a witness be provided to sponsor a portion or portions of the administrative record. The Presiding Officer, upon finding that the standards in § 124.85(b)(3) have been met, shall direct the appropriate party to produce the witness for cross-examination. If a sponsoring witness cannot be provided, the Presiding Officer may reduce the weight accorded the appropriate portion of the record.

NOTE: Receiving the administrative record into evidence automatically serves several purposes: (1) It documents the prior course of the proceedings; (2) it provides a record of the views of affected persons for consideration by the agency decisionmaker; and (3) it provides factual material for use by the decisionmaker.

(3) Whenever any evidence or testimony is excluded by the Presiding Officer as inadmissible, all such evidence or testimony existing in written form shall remain a part of the record as an offer of proof. The party seeking the admission of oral testimony may make an offer of proof, by means of a brief statement on the record describing the testimony excluded.

(4) When two or more parties have substantially similar interests and positions, the Presiding Officer may limit the number of attorneys or other party representatives who will be permitted to cross-examine and to make and argue motions and objections on behalf of those parties. Attorneys may, however, engage in cross-examination relevant to matters not adequately covered by previous cross-examination.

(5) Rulings of the Presiding Officer on the admissibility of evidence or testimony, the propriety of cross-examination, and other procedural matters shall appear in the record and shall control further proceedings, unless reversed as a result of an interlocutory appeal taken under § 124.90.

(6) All objections shall be made promptly or be deemed waived. Parties shall be presumed to have taken exception to an adverse ruling. No objection shall be deemed waived by further participation in the hearing.

(e) *Admission of evidence on environmental impacts.* If a hearing is granted under this subpart for a new source subject to NEPA, the Presiding Officer may admit evidence relevant to any environmental impacts of the permitted facility if the evidence would be relevant to the Agency's obligation under § 122.29(c)(3). If the source holds a final EPA-issued RCRA, PSD, or UIC permit, or an ocean dumping permit under the Marine Protection, Research, and Sanctuaries Act (MPRSA), no such evidence shall be admitted nor shall cross-examination be allowed relating to:

(1) Effects on air quality, (2) effects attributable to underground injection or hazardous waste management practices, or (3) effects of ocean dumping subject to the MPRSA, which were considered or could have been considered in the PSD, RCRA, UIC, or MPRSA permit issuance proceedings. However, the presiding officer may admit without cross-examination or any supporting witness relevant portions of the record of PSD, RCRA, UIC, or MPRSA permit issuance proceedings.

[48 FR 14264, Apr. 1, 1983, as amended at 49 FR 38052, Sept. 26, 1984]

§ 124.86 Motions.

(a) Any party may file a motion (including a motion to dismiss a particular claim on a contested issue) with the Presiding Officer on any matter relating to the proceeding. All motions shall be in writing and served as provided in § 124.80 except those made on

the record during an oral hearing before the Presiding Officer.

(b) Within 10 days after service of any written motion, any part to the proceeding may file a response to the motion. The time for response may be shortened to 3 days or extended for an additional 10 days by the Presiding Officer for good cause shown.

(c) Notwithstanding § 122.4, any party may file with the Presiding Officer a motion seeking to apply to the permit any regulatory or statutory provision issued or made available after the issuance of the permit under § 124.15. The Presiding Officer shall grant any motion to apply a new statutory provision unless he or she finds it contrary to legislative intent. The Presiding Officer may grant a motion to apply a new regulatory requirement when appropriate to carry out the purpose of CWA, and when no party would be unduly prejudiced thereby.

I-8

§ 124.87 Record of hearings.

(a) All orders issued by the Presiding Officer, transcripts of oral hearings or arguments, written statements of position, written direct and rebuttal testimony, and any other data, studies, reports, documentation, information and other written material of any kind submitted in the proceeding shall be a part of the hearing record and shall be available to the public except as provided in §§ 122.7 (NPDES) and 270.12 (RCRA), in the Office of the Regional Hearing Clerk, as soon as it is received in that office.

(b) Evidentiary hearings shall be either stenographically reported verbatim or tape recorded, and thereupon transcribed. After the hearing, the reporter shall certify and file with the Regional Hearing Clerk:

(1) The original of the transcript, and

(2) The exhibits received or offered into evidence at the hearing.

(c) The Regional Hearing Clerk shall promptly notify each of the parties of the filing of the certified transcript of proceedings. Any party who desires a copy of the transcript of the hearing may obtain a copy of the hearing transcript from the Regional Hearing Clerk upon payment of costs.

(d) The Presiding Officer shall allow witnesses, parties, and their counsel an opportunity to submit such written proposed corrections of the transcript of any oral testimony taken at the hearing, pointing out errors that may have been made in transcribing the testimony, as are required to make the transcript conform to the testimony. Except in unusual cases, no more than 30 days shall be allowed for submitting such corrections from the day a complete transcript of the hearing becomes available.

§ 124.88 Proposed findings of fact and conclusions; brief.

Within 45 days after the certified transcript is filed, any party may file with the Regional Hearing Clerk proposed findings of fact and conclusions of law and a brief in support thereof. Briefs shall contain appropriate references to the record. A copy of these findings, conclusions, and brief shall be served upon all the other parties and the Presiding Officer. The Presiding Officer, for good cause shown, may extend the time for filing the proposed findings and conclusions and/or the brief. The Presiding Officer may allow reply briefs.

§ 124.89 Decisions.

(a) The Presiding Officer shall review and evaluate the record, including the proposed findings and conclusions, any briefs filed by the parties, and any interlocutory decisions under § 124.90 and shall issue and file his initial decision with the Regional Hearing Clerk. The Regional Hearing Clerk shall immediately serve copies of the initial decision upon all parties (or their counsel of record) and the Administrator.

(b) The initial decision of the Presiding Officer shall automatically become the final decision 30 days after its service unless within that time:

(1) A party files a petition for review by the Administrator pursuant to § 124.91; or

(2) The Administrator *sua sponte* files a notice that he or she will review the decision pursuant to § 124.91.

§ 124.90 Interlocutory appeal.

(a) Except as provided in this section, appeals to the Administrator may be taken only under § 124.91. Appeals from orders or rulings may be taken under this section only if the Presiding Officer, upon motion of a party, certifies those orders or rulings to the Administrator for appeal on the record. Requests to the Presiding Officer for certification must be filed in writing within 10 days of service of notice of the order, ruling, or decision and shall state briefly the grounds relied on.

(b) The Presiding Officer may certify an order or ruling for appeal to the Administrator if:

(1) The order or ruling involves an important question on which there is substantial ground for difference of opinion, and

(2) *Either:* (i) An immediate appeal of the order or ruling will materially advance the ultimate completion of the proceeding; or

(ii) A review after the final order is issued will be inadequate or ineffective.

(c) If the Administrator decides that certification was improperly granted, he or she shall decline to hear the appeal. The Administrator shall accept or decline all interlocutory appeals within 30 days of their submission; if the Administrator takes no action within that time, the appeal shall be automatically dismissed. When the Presiding Officer declines to certify an order or ruling to the Administrator for an interlocutory appeal, it may be reviewed by the Administrator only upon appeal from the initial decision of the Presiding Officer, except when the Administrator determines, upon motion of a party and in exceptional circumstances, that to delay review would not be in the public interest. Such motion shall be made within 5 days after receipt of notification that the Presiding Officer has refused to certify an order or ruling for interlocutory appeal to the Administrator. Ordinarily, the interlocutory appeal will be decided on the basis of the submissions made to the Presiding Officer. The Administrator may, however, allow briefs and oral argument.

(d) In exceptional circumstances, the Presiding Officer may stay the proceeding pending a decision by the Administrator upon an order or ruling certified by the Presiding Officer for an interlocutory appeal, or upon the denial of such certification by the Presiding Officer.

(e) The failure to request an interlocutory appeal shall not prevent taking exception to an order or ruling in an appeal under § 124.91.

§ 124.91 Appeal to the Administrator.

(a)(1) Within 30 days after service of an initial decision, or a denial in whole or in part of a request for an evidentiary hearing, any party or requester, as the case may be, may appeal any matter set forth in the initial decision or denial, or any adverse order or ruling to which the party objected during the hearing, by filing with the Administrator notice of appeal and petition for review. The petition shall include a statement of the supporting reasons and, when appropriate, a showing that the initial decision contains:

(i) A finding of fact or conclusion of law which is clearly erroneous, or

(ii) An exercise of discretion or policy which is important and which the Administrator should review.

(2) Within 15 days after service of a petition for review under paragraph (c)(1) of this section, any other party to the proceeding may file a responsive petition.

(3) Policy decisions made or legal conclusions drawn in the course of denying a request for an evidentiary hearing may be reviewed and changed by the Administrator in an appeal under this section.

(b) Within 30 days of an initial decision or denial or a request for an evidentiary hearing the Administrator may, *sua sponte*, review such decision. Within 7 days after the Administrator has decided under this section to review an initial decision or the denial of a request for an evidentiary hearing, notice of that decision shall be served by mail upon all affected parties and the Regional Administrator.

(c)(1) Within a reasonable time following the filing of the petition for

review, the Administrator shall issue an order either granting or denying the petition for review. When the Administrator grants a petition for review or determines under paragraph (b) of this section to review a decision, the Administrator may notify the parties that only certain issues shall be briefed.

(2) Upon granting a petition for review, the Regional Hearing Clerk shall promptly forward a copy of the record to the Judicial Officer and shall retain a complete duplicate copy of the record in the Regional Office.

(d) Notwithstanding the grant of a petition for review or a determination under paragraph (b) of this section to review a decision, the Administrator may summarily affirm without opinion and initial decision or the denial of a request for an evidentiary hearing.

(e) A petition to the Administrator under paragraph (a) of this section for review of any initial decision or the denial of an evidentiary hearing is, under 5 U.S.C. 704, a prerequisite to the seeking of judicial review of the final decision of the Agency.

(f) If a party timely files a petition for review or if the Administrator *sua sponte* orders review, then, for purposes of judicial review, final Agency action on an issue occurs as follows:

(1) If the Administrator denies review or summarily affirms without opinion as provided in § 124.91(d), then the initial decision or denial becomes the final Agency action and occurs upon the service of notice of the Administrator's action.

(2) If the Administrator issues a decision without remanding the proceeding then the final permit, redrafted as required by the Administrator's original decision, shall be reissued and served upon all parties to the appeal.

(3) If the Administrator issues a decision remanding the proceeding, then final Agency action occurs upon completion of the remanded proceeding, including any appeals to the Administrator from the results of the remanded proceeding.

(g) The petitioner may file a brief in support of the petition within 21 days after the Administrator has granted a petition for review. Any other party may file a responsive brief within 21 days of service of the petitioner's brief. The petitioner then may file a reply brief within 14 days of service of the responsive brief. Any person may file an *amicus brief* for the consideration of the Administrator within the same time periods that govern reply briefs. If the Administrator determines, *sua sponte*, to review an initial Regional Administrator's decision or the denial of a request for an evidentiary hearing, the Administrator shall notify the parties of the schedule for filing briefs.

(h) Review by the Administrator of an initial decision or the denial of an evidentiary hearing shall be limited to the issues specified under paragraph (a) of this section, except that after notice to all parties, the Administrator may raise and decide other matters which he or she considers material on the basis of the record.

(blank)

PERMIT NO. FL0041173
Minor Non-POTW

UNITED STATES ENVIRONMENTAL PROTECTION AGENCY
REGION IV

AUTHORIZATION TO DISCHARGE UNDER THE
NATIONAL POLLUTANT DISCHARGE ELIMINATION SYSTEM

In compliance with the provisions of the Clean Water Act, as amended (33 U.S.C. 1251 et seq.; the "Act"),

AES Cedar Bay, Inc.
1001 North 19th Street
Suite 2000
Arlington, VA 22209

is authorized to discharge from a facility located at

Cedar Bay Cogeneration Project
9469 Eastport Road
Duval County
Jacksonville, Florida 32218

to receiving waters named

St. Johns and Broward Rivers

in accordance with effluent limitations, monitoring requirements, and other conditions set forth herein. The permit consists of this cover sheet, Part I 6 pages, Part II 16 pages, Part III 3 pages and Attachment A.

This permit shall become effective on October 1, 1992.

This permit and the authorization to discharge shall expire at midnight, July 31, 1997.

July 22, 1992
Date Issued

R. J. McGhee for
W. Ray Cunningham, Director
Water Management Division

PART I

A. EFFLUENT LIMITATIONS AND MONITORING REQUIREMENTS - FINAL

1. During the period beginning on the effective date of this permit and lasting through the term of this permit, the permittee is authorized to discharge Main Plant effluent from Outfall 001 1/ (includes Outfalls 003 and 008) to the St. Johns River via the Seminole Kraft Corporation discharge system (NPDES Permit No. FL0000400).

2. The pH shall not be less than 6.5 standard units nor greater than 8.5 standard units. 2/

3. There shall be no discharge of floating solids or visible foam in other than trace amounts, not shall there be a visible sheen on the receiving waterbody.

1/ Serial number assigned for identification and monitoring purposes; the discharge is intermittent.

2/ Compliance with limitations and other permit conditions applicable to tributary outfalls shall be deemed in compliance with this requirement and no additional monitoring is required.

H-12

PART I

B. EFFLUENT LIMITATIONS AND MONITORING REQUIREMENTS - FINAL

1. During the period beginning on the effective date of this permit and lasting through the term of this permit, the permittee is authorized to discharge runoff and roof and yard drain discharges during construction from the Yard Area Runoff Pond Outfall 003 1/ to Outfall 001 and to the Broward River during storms in excess of the 10-year, 24-hour rainfall event.

Such discharges shall be limited and monitored by the permittee as specified below:

PARAMETERS	DISCHARGE LIMITATIONS Instantaneous Maximum	MONITORING REQUIREMENTS Measurement Frequency	Sample Type
Flow, MGD	Report	1/Week	Pump Logs
Total Suspended Solids, mg/l	50 2/	1/Week	Grab
Total Recoverable Copper, mg/l 3/	Report	1/2 Weeks	Grab
Total Recoverable Zinc, mg/l 3/	Report	1/2 Weeks	Grab
Total Recoverable Mercury, mg/l 3/	Report	1/2 Weeks	Grab
Total Recoverable Arsenic, mg/l 3/	Report	1/2 Weeks	Grab
Total Recoverable Antimony, mg/l 3/	Report	1/2 Weeks	Grab
Total Recoverable Beryllium, mg/l 3/	Report	1/2 Weeks	Grab
Total Recoverable Cadmium, mg/l 3/	Report	1/2 Weeks	Grab
Total Recoverable Lead, mg/l 3/	Report	1/2 Weeks	Grab
Total Recoverable Nickel, mg/l 3/	Report	1/2 Weeks	Grab
Phenol, mg/l 3/	Report	1/2 Weeks	Grab
Naphthalene, mg/l 3/	Report	1/2 Weeks	Grab
Toluene, mg/l 3/	Report	1/2 Weeks	Grab
Additional Monitoring	See item 7, page I-3.	1/day of discharge	Grab

2. The pH shall not be less than 6.5 standard units nor greater than 8.5 standard units during periods of discharge to either the St. Johns or Broward Rivers and shall be monitored 1/week on a grab sample for discharges to Outfall 001 and 1/day for discharges to the Broward River.

3. There shall be no discharge of floating solids or visible foam in other than trace amounts nor shall the effluent cause a visible sheen on the receiving water.

4. Limitations and monitoring requirements are not applicable during periods of no discharge.

5. At all times, the pond volume shall be adequate to contain the total volume of water equal to the 10-year, 24-hr storm event plus accumulated silt. Not later than December 31st of each year, the permittee shall provide measurements to assure that this condition is met.

CONTINUED

H-13

PART I

B. EFFLUENT LIMITATIONS AND MONITORING REQUIREMENTS - FINAL (Continued)

6. Samples taken in compliance with the monitoring requirements specified above shall be taken at the following location(s): point(s) of discharge from the Yard Area Pond to Outfall 001 and to the Broward River prior to mixing with any other waste stream.

7. Storm water runoff in excess of the 10-year, 24-hr rainfall event may be discharged to the Broward River. However, during periods of such a discharge, the permittee shall monitor for the following pollutants once per day of discharge by grab sample:

Total Suspended Solids
Total Recoverable Copper
Total Recoverable Arsenic
Total Recoverable Beryllium
Total Recoverable Chromium
Total Recoverable Nickel
Naphthalene
Biochemical Oxygen Demand (5-day)
Dissolved Oxygen
Phosphorus
Total Recoverable Mercury
Total Recoverable Zinc
Total Recoverable Antimony
Total Recoverable Cadmium
Total Recoverable Lead
Phenol
Toluene
Total Organic Carbon
Total Kjeldahl Nitrogen
Oil and Grease

Unit of measure shall be mg/l and the results shall be attached to and submitted with the Discharge Monitoring Report form (DMR). See part III.F for additional permit conditions.

1/ Internal serial number assigned for identification and monitoring purposes; the discharge is intermittent.

2/ Applicable to any flow up to the flow resulting from a 10-year, 24-hr storm event.

3/ Monitoring for this parameter is only required when a discharge occurs. See part III.F for additional permit language.

NOTE: These limitations are applicable during construction of the plant. Except as provided for overflow from Outfalls 003 and 008, no other point source of contaminated runoff to waters of the United States is authorized.

PART I

C. EFFLUENT LIMITATIONS AND MONITORING REQUIREMENTS - FINAL

1. During the period beginning on the effective date of this permit and lasting through the term of this permit, the permittee is authorized to discharge from Outfall 008 1/ - Coal, Limestone, and Ash Storage Areas Runoff Retention Basin effluent to Outfall 001, and to the Broward River during storms in excess of the 10-year, 24-hour rainfall event.

Such discharges shall be limited and monitored by the permittee as specified below:

PARAMETERS	DISCHARGE LIMITATIONS Instantaneous Maximum	MONITORING REQUIREMENTS Measurement Frequency	Sample Type
Flow, MGD	Report	1/Week	Pump Logs
Total Suspended Solids, mg/l	50 2/	1/Week	Grab
Total Recoverable Copper, 3/ mg/l	Report	1/2 Weeks	Grab
Total Recoverable Zinc, mg/l 3/	Report	1/2 Weeks	Grab
Total Recoverable Mercury, mg/l 3/	Report	1/2 Weeks	Grab
Total Recoverable Arsenic, mg/l 3/	Report	1/2 Weeks	Grab
Total Recoverable Antimony, mg/l 3/	Report	1/2 Weeks	Grab
Total Recoverable Beryllium, mg/l 3/	Report	1/2 Weeks	Grab
Total Recoverable Cadmium, mg/l 3/	Report	1/2 Weeks	Grab
Total Recoverable Lead, mg/l 3/	Report	1/2 Weeks	Grab
Total Recoverable Nickel, mg/l 3/	Report	1/2 Weeks	Grab
Phenol, mg/l 3/	Report	1/2 Weeks	Grab
Naphthalene, mg/l 3/	Report	1/2 Weeks	Grab
Toluene, mg/l 3/	Report	1/2 Weeks	Grab
Additional Monitoring	See item 6, page I-5.	1/day of discharge	Grab

2. The pH shall not be less than 6.5 standard units nor greater than 8.5 standard units

3. There shall be no discharge of floating solids or visible foam in other than trace amounts nor shall the effluent cause a visible sheen on the receiving water.

CONTINUED

C. EFFLUENT LIMITATIONS AND MONITORING REQUIREMENTS - FINAL (continued)

4. Monitoring requirements are not applicable during periods of no discharge.

5. Samples taken in compliance with the monitoring requirements specified above shall be taken at the following location(s): point(s) of discharge from the Coal, Limestone, and Ash Retention Basin prior to mixing with any other waste stream, except that during periods of no discharge.

6. Storm water runoff in excess of the 10-year, 24-hr rainfall event may be discharged to the Broward River. However, during periods of such discharge, the permittee shall monitor for the following pollutants once per day of discharge by grab sample:

Total Suspended Solids
Total Recoverable Copper
Total Recoverable Arsenic
Total Recoverable Beryllium
Total Recoverable Chromium
Total Recoverable Nickel
Naphthalene
Biochemical Oxygen Demand (5-day)
Dissolved Oxygen
Phosphorus
Total Recoverable Mercury
Total Recoverable Zinc
Total Recoverable Antimony
Total Recoverable Cadmium
Total Recoverable Lead
Phenol
Toluene
Total Organic Carbon
Total Kjeldahl Nitrogen
Oil and Grease

Unit of measure shall be mg/l and the results shall be and attached to and submitted with the Discharge Monitoring Report form (DMR).

1/ Internal serial number assigned for identification and monitoring purposes; the discharge is intermittent.

2/ Monitoring for this parameter is only required when a discharge occurs. Applicable to any flow up to the flow resulting from a 10-year, 24-hr storm event.

3/ Monitoring for this parameter is only required when a discharge occurs. See Part III.F for additional permit conditions.

NOTE: These limitations are applicable during construction of the plant. Except as provided for overflow from Outfalls 003 and 008, no other point source of contaminated runoff to waters of the United States is authorized.

PART I

D. SCHEDULE OF COMPLIANCE

1. The permittee shall achieve compliance with the effluent limitations specified for discharges in accordance with the following schedule:

   a. Attainment of effluent limitations.....Start of Discharge

   b. Erosion and sediment control plan (Part III.C)
      (1) Implement.....Effective date of permit
      (2) Reports.....Semiannually, starting six months after the effective date of the permit

   c. Retention Pond Volume Reports.....Annually by December 28th

2. No later than 14 calendar days following a date identified in the above schedule of compliance, the permittee shall submit either a report of progress or, in the case of specific actions being required by identified dates, a written notice of compliance or noncompliance. In the latter case, the notice shall include the cause of noncompliance, any remedial actions taken, and the probability of meeting the next scheduled requirement.

(blank)

Part II

STANDARD CONDITIONS FOR NPDES PERMITS

SECTION A. GENERAL CONDITIONS

1. Duty to Comply

The permittee must comply with all conditions of this permit. Any permit noncompliance constitutes a violation of the Clean Water Act and is grounds for enforcement action; for permit termination, revocation and reissuance, or modification; or for denial of a permit renewal application.

2. Penalties for Violations of Permit Conditions

Any person who violates a permit condition is subject to a civil penalty not to exceed $25,000 per day for each violation. Any person who negligently violates any permit condition is subject to criminal penalties of $2,500 to $25,000 per day of violation, or imprisonment for not more than 1 year, or both. Any person who knowingly violates permit conditions is subject to criminal penalties of $5,000 to $50,000 per day of violation, or imprisonment for not more than 3 years, or both. Also, any person who violates a permit condition may be assessed an administrative penalty not to exceed $10,000 per violation with the maximum amount not to exceed $125,000. [Ref: 40 CFR 122.41(a)]

3. Duty to Mitigate

The permittee shall take all reasonable steps to minimize or prevent any discharge in violation of this permit which has a reasonable likelihood of adversely affecting human health or the environment.

4. Permit Modification

After notice and opportunity for a hearing, this permit may be modified, terminated, or revoked for cause including, but not limited to, the following:

a. Violation of any terms or conditions of this permit;

b. Obtaining this permit by misrepresentation or failure to disclose fully all relevant facts;

c. A change in any conditions that requires either temporary interruption or elimination of the permitted discharge; or

d. Information newly acquired by the Agency indicating the discharge poses a threat to human health or the environment.

If the permittee believes that any past or planned activity would
cause for modification or revocation and reissuance under 40 CFR 122.6
the permittee must report such information to the Permit Issuin
Authority. The submittal of a new application may be required of th
permittee. The filing of a request by the permittee for a permi
modification, revocation and reissuance, or termination, or
notification of planned changes or anticipated noncompliance, does no
stay any permit condition.

5. Toxic Pollutants

Notwithstanding Paragraph A-4, above, if a toxic effluent standard o
prohibition (including any schedule of compliance specified in suc
effluent standard or prohibition) is established under Section 307(a
of the Act for a toxic pollutant which is present in the discharge an
such standard or prohibition is more stringent than any limitation o
such pollutant in this permit, this permit shall be modified or revoke
and reissued to conform to the toxic effluent standard or prohibitio
and the permittee so notified.

6. Civil and Criminal Liability

Except as provided in permit conditions on "Bypassing" Section B
Paragraph B-3, and "Upsets" Section b, Paragraph B-4, nothing in thi
permit shall be construed to relieve the permittee from civil
criminal penalties for noncompliance.

7. Oil and Hazardous Substance Liability

Nothing in this permit shall be construed to preclude the institutio
of any legal action or relieve the permittee from any responsibilities
liabilities, or penalties to which the permittee is or may be subjec
under Section 311 or the Act.

8. State Laws

Nothing in this permit shall be construed to preclude the institutio
of any legal action or relieve the permittee from any responsibilities
liabilities, or penalties established pursuant to any applicable Stat
law or regulation under authority preserved by Section 510 of the Act

9. Property Rights

The issuance of this permit does not convey any property rights of an
sort, or any exclusive privileges, nor does it authorize any injury t
private property or any invasion of personal rights, nor an
infringement of Federal, State, or local laws or regulations.

10. Onshore or Offshore Construction

This permit does not authorize or approve the construction
onshore or offshore physical structures or facilities or the un
of any work in any waters of the United States.

H-20

11. Severability

The provisions of this permit are severable, and if any provision of this permit, or the application of any provision of this permit to any circumstance, is held invalid, the application of such provision to other circumstances, and the remainder of this permit, shall not be affected thereby.

12. Duty to Provide Information

The permittee shall furnish to the Permit Issuing Authority, within a reasonable time, any information which the Permit Issuing Authority may request to determine whether cause exists for modifying, revoking and reissuing, or terminating this permit or to determine compliance with this permit. The permittee shall also furnish to the Permit Issuing Authority upon request, copies of records required to be kept by this permit.

SECTION B. OPERATION AND MAINTENANCE OF POLLUTION CONTROLS

1. Proper Operation and Maintenance

The permittee shall at all times properly operate and maintain all facilities and systems of treatment and control (and related appurtenances) which are installed or used by the permittee to achieve compliance with the conditions of this permit. Proper operation and maintenance also includes adequate laboratory controls and appropriate quality assurance procedures. This provision requires the operation of back-up or auxiliary facilities or similar systems which are installed by a permittee only when the operation is necessary to achieve compliance with the conditions of the permit.

2. Need to Halt or Reduce not a Defense

It shall not be a defense for a permittee in an enforcement action that it would have been necessary to halt or reduce the permitted activity in order to maintain compliance with the condition of this permit.

3. Bypass of Treatment Facilities

a. Definitions

(1) "Bypass means the intentional diversion of waste streams from any portion of a treatment facility, which is not a designed or established operating mode for the facility.

(2) "Severe property damage" means substantial physical damage to property, damage to the treatment facilities which causes them to become inoperable, or substantial and permanent loss of natural resources which can reasonably be expected to occur in the absence of a bypass. Severe property damage does not mean economic loss caused by delays in production.

b. Bypass not exceeding limitations.

The permittee may allow any bypass to occur which does not cause effluent limitations to be exceeded, but only if it also is for essential maintenance to assure efficient operation. These bypasses are not subject to the provisions of Paragraphs c. and d. of this section.

c. Notice

(1) Anticipated bypass. If the permittee knows in advance of the need for a bypass, it shall submit prior notice, if possible at least ten days before the date of the bypass; including an evaluation of the anticipated quality and effect of the bypass.

(2) Unanticipated bypass. The permittee shall submit notice of an unanticipated bypass as required in Section D, Paragraph D-8 (24-hour notice).

d. Prohibition of bypass

(1) Bypass is prohibited and the Permit Issuing Authority may take enforcement action against a permittee for bypass, unless:

(a) Bypass was unavoidable to prevent loss of life, personal injury, or severe property damage;

(b) There were no feasible alternatives to the bypass, such as the use of auxiliary treatment facilities, retention of untreated wastes, or maintenance during normal periods of equipment downtime. This condition is not satisfied if adequate backup equipment should have been installed in the exercise of reasonable engineering judgement to prevent a bypass which occurred during normal periods of equipment downtime or preventive maintenance; and

(c) The permittee submitted notices as required under Paragraph c. of this section.

(2) The permit Issuing Authority may approve an anticipated bypass, after considering its adverse effects, if the Permit Issuing Authority determines that it will meet the three conditions listed above in Paragraph d.(1) of this section.

4. Upsets

"Upset" means an exceptional incident in which there is unintentional and temporary noncompliance with technology based permit effluent limitations because of factors beyond the reasonable control of the permittee. An upset does not include noncompliance to the extent caused by operational error, improperly designed treatment facilities, lack of preventive maintenance, or careless or improper operation. An upset constitutes an affirmative defense to an action brought for non-compliance with such technology based permit limitation if the requirements of 40 CFR 122.41(n)(3) are met.

5. Removed Substances

This permit does not authorize discharge of solids, sludge, filter backwash, or other pollutants removed in the course of treatment of control of wastewaters of the United States unless specifically limited in Part 1.

SECTION C. MONITORING AND RECORDS

1. Representative Sampling

Samples and measurements taken as required herein shall be representative of the volume and nature of the monitored discharge. All samples shall be taken at the monitoring points specified in this permit and, unless otherwise specified, before the effluent joins or is diluted by any other wastestream, body of water, or substance. Monitoring points shall not be changed without notification to and the approval of the Permit Issuing Authority.

2. Flow Measurements

Appropriate flow measurements devices and methods consistent with accepted scientific practices shall be selected and used to insure the accuracy and reliability of measurements of the volume of monitored discharges. The devices shall be installed, calibrated and maintained to insure that the accuracy of the measurements are consistent with the accepted capability of that type of device. Devices selected shall be capable of measuring flows with a maximum deviation of less than ±10% from the true discharge rates throughout the range of expected discharge volumes. Once-through condenser cooling water flow which is monitored by pump logs, or pump hour meters as specified in Part I of this permit and based on the manufacture's pump curves shall not be subject to this requirement. Guidance in selection, installation, calibration, and operation of acceptable flow measurement devices can be obtained from the following references:

(1) "A Guide of Methods and Standards for the Measurement of Wat Flow", U.S. Department of Commerce, National Bureau of Standard NBS Special Publication 421, May 1975, 97 pp. (Available from t U.S. Government Printing Office, Washington, D.C. 20402. Order SD catalog No. C13.10:421.)

(2) "Water Measurement Manual", U.S. Department of Interior, Bureau Reclamation, Second Edition, Revised Reprint, 1974, 327 p (Available from the U.S. Government Printing Office, Washingto D.C. 20402. Order by catalog No. 127.19/2:W29/2, Stock No. S 24003-0027.)

(3) "Flow Measurement in Open Channels and Closed Conduits", U. Department of Commerce, National Bureau of Standards, NBS Speci Publication 484, October 1977, 982 pp. (Available in paper copy microfiche from National Technical Information Service (NTIS Springfield, VA 22151. Order by NTIS No. PB-273 535/5ST.)

(4) "NPDES Compliance Flow Measurement Manual", U.S. Environment Protection Agency, Office of Water Enforcement, Publication MC 77, September 1981, 135 pp. (Available from the General Servi Administration (8BRC), Centralized Mailing Lists Services, Buildi 41, Denver Federal Center, Denver, CO. 80255.)

3. Monitoring Procedures

Monitoring must be conducted according to test procedures approved und 40 CFR Part 136, unless other test procedures have been specified this permit.

4. Penalties for Tampering

The Clean Water Act provides that any person who falsifies, tampe with, or knowingly renders inaccurate, any monitoring device or meth required to be maintained under this permit shall, upon conviction, punished by a fine of not more than $10,000 per violation, imprisonment for not more than 2 years, or both.

5. Retention of Records

The permittee shall retain records of all monitoring informa including all calibration and maintenance records and all original str chart recordings for continuous monitoring instrumentation, copies all reports required by this permit, and records of all data used complete the application for this permit, for a period of at least years from the date of the sample, measurement, report, or applica This period may be extended by the Permit Issuing Authority at any

6. Record Contents

Records of monitoring information shall include:

a. The date, exact place, and time of sampling or measurements;

b. The individual(s) who performed the sampling of measurements;

c. The date(s) analyses were performed;

d. The individual(s) who performed the analyses;

e. The analytical techniques or methods used; and

f. The results of such analysis.

7. Inspection and Entry

The permittee shall allow the permit Issuing Authority, or a authorized representative, upon the presentation of credentials and other documents as may be required by law, to;

a. Enter upon the permittee's premises where a regulated facility or activity is located or conducted, or where records must be kept under the conditions of this permit;

b. Have access to and copy, at reasonable times, any records that must be kept under the conditions of this permit.

c. Inspect at reasonable time any facilities, equipment (including monitoring and control equipment), practices, or operations regulated or required under this permit; and

d. Sample or monitor at reasonable times, for the purposes of assuring permit compliance or as otherwise authorized by the Clean Water Act, any substances or parameters at any location.

SECTION D. REPORTING REQUIREMENTS

1. Change in Discharge

The permittee shall give notice to the Permit Issuing Authority as soon as possible of any planned physical alterations or additions to the permitted Facility. Notice is required only when:

a. The alteration or addition to a permitted facility may meet one of the criteria for determining whether a facility is a new source; or

b. The alteration or addition could significantly change the natur or increase the quantity of pollutants discharged. Thi notification applies to pollutants which are subject neither t effluent limitations in the permit, nor to notificatic requirements under Section D, Paragraph D-10(a).

2. Anticipated Noncompliance

The permittee shall give advance notice to the Permit Issuing Authorit of any planned change in the permitted facility or activity which ma result in noncompliance with permit requirements. Any maintenance c facilities, which might necessitate unavoidable interruption c operation and degradation of effluent quality, shall be scheduled durir noncritical water quality periods and carried out in a manner approve by the Permit Issuing Authority.

3. Transfer of Ownership or Control

A permit may be automatically transferred to another if:

a. The permittee notifies the Permit Issuing Authority of th proposed transfer at least 30 days in advance of the propose transfer date;

b. The notice includes a written agreement between the existing new permittees containing a specific date for transfer of permi responsibility, coverage, and liability between them; and

c. The Permit Issuing Authority does not notify the existin permittee of his or her intent to modify or revoke and reissu the permit. If this notice is not received, the transfer effective on the date specified in the agreement mentioned i paragraph b.

4. Monitoring Reports

See Part III of this permit.

5. Additional Monitoring by the Permittee

If the permittee monitors any pollutant more frequently than require by this permit, using test procedures approved under 40 CFR 136 or a specified in this permit, the results of this monitoring shall b included in the calculation and reporting of the data submitted in th Discharge Monitoring Report (DMR). Such increased frequency shall als be indicated.

6. Averaging of Measurements

Calculations for limitations which require averaging of measure shall utilize an arithmetic mean unless otherwise specified by Permit Issuing Authority in the permit.

H-26

7. Compliance Schedules

Reports of compliance or noncompliance with, or any progress reports on, interim and final requirements contained in any compliance schedule of this permit shall be submitted no later than 14 days following each schedule date. Any reports of noncompliance shall include the cause of noncompliance, any remedial actions taken, and the probability of meeting the next scheduled requirement.

8. Twenty-Four Hour Reporting

The permittee shall orally report any noncompliance which may endanger health or the environment, within 24 hours from the time the permittee becomes aware of the circumstances. A written submission shall also be provided within 5 days of the time the permittee becomes aware of the circumstances. The written submission shall contain a description of the noncompliance and its cause, the period of noncompliance, including the exact dates and times; and if the noncompliance has not been corrected, the anticipated time it is expected to continue, and steps taken or planned to reduce, eliminate and prevent reoccurrence of the noncompliance. The Permit Issuing Authority may verbally waive the written report, on a case-by-case basis, when the oral report is made.

The following violations shall be included in the 24 hour report when they might endanger health or the environment:

a. An unanticipated bypass which exceeds any effluent limitation in the permit.

b. Any upset which exceeds any effluent limitation in the permit.

9. Other Noncompliance

The permittee shall report in narrative form, all instances of noncompliance not previously reported under Section D, Paragraphs D-2, D-4, D-7, and D-8 at the time monitoring reports are submitted. The reports shall contain the information listed in Paragraph D-8.

10. Changes in Discharges of Toxic Substances

The permittee shall notify the Permit Issuing Authority as soon as it knows or has reason to believe:

a. That any activity has occurred or will occur which would result in the discharge, on a routine or frequent basis, of any toxic substance(s) (listed at 40 CFR 122, Appendix D, Table II and III) which is not limited in the permit, if that discharge will exceed the highest of the following "notification levels":

(1) One hundred micrograms per liter (100 ug/l);

"I certify under penalty of law that this document and all attachments were prepared under my direction or supervision in accordance with a system designed to assure that qualified personnel properly gather and evaluate the information submitted. Based on my inquiry of the person or persons who manage the system, or those persons directly responsible for gathering the information, the information submitted is, to the best of my knowledge and belief, true, accurate, and complete. I am aware that there are significant penalties for submitting false information, including the possibility of fine and imprisonment for knowing violations."

13. Availability of Reports

Except for data determined to be confidential under 40 CFR Part 2, all reports prepared in accordance with the terms of this permit shall be available for public inspection at the offices of the Permit Issuing Authority. As required by the Act, permit applications, permits and effluent data shall not be considered confidential.

14. Penalties for Falsification of Reports

The Clean Water Act provides that any person who knowingly makes false material statement, representation, or certification in any record or other document submitted or required to be maintained under this permit, including monitoring reports or reports of compliance or noncompliance, or who knowingly falsifies, tampers with, or renders inaccurate any monitoring device or method required to be maintained under the Clean Water Act, shall, upon conviction, be punished by a fine of not more than $10,000 or by imprisonment for not more than 2 years, or both.

SECTION E. DEFINITIONS

1. Permit Issuing Authority

The Regional Administrator of EPA Region IV or his designee, unless at some time in the future the State receives authority to administer the NPDES program and assumes jurisdiction over the permit; at which time, the Director of the State program receiving the authorization becomes the issuing authority.

2. Act

"Act" means the Clean Water Act (formerly referred to as the [illegible] Water Pollution Control Act) Public Law 92-500, as amended by [illegible] Laws 95-217, 95-576, 96-483, 97-117, and 100-4, 33 U.S.C. 125[illegible]

(1) For a corporation: by a responsible corporate officer. Fo the purpose of this Section, a responsible corporate office means: (1) a president, secretary, treasurer, or vice president of the corporation in charge of a principa business function, or any other person who performs simila policy or decision-making functions for the corporation, o (2) the manager of one or more manufacturing productio facilities employing more than 250 persons or having gros annual sales or expenditures exceeding 25 million (in second quarter 1980 dollars), if authority to sign documents has been assigned or delegated to the manager in accordance with corporate procedures.

(2) For a partnership or sole proprietorship: by a general partner or the proprietor, respectively; or

(3) For a municipality, State, Federal, or other public agencies by either a principal executive officer or ranking elected official.

b. All reports required by the permit and other information requested by the Permit Issuing Authority shall be signed by a person described above or by a duly authorized representative only if:

(1) The authorization is made in writing by person described above;

(2) The authorization specifies either an individual or a position having responsibility for the overall operation of the regulated facility or activity, such as the position of plant manager, operator of a well or a well field, superintendent, position of equivalent responsibility, or an individual or position having overall responsibility for environmental matters for the company. (A duly authorized representative may this be either a named individual or any individual occupying a named position.); and

(3) The written authorization is submitted to the Permit Issuing Authority.

c. Certification. Any person signing a document under paragraphs (a) or (b) of this section shall make the following certification:

(2) Two hundred micrograms per liter (200 ug/l) for acrolein a
acrylonitrile; five hundred micrograms per liter (500 ug) f
2,4-dinitrophenol and for 2-methyl-4,6-dinitrophenol; a
one milligram per liter (1 mg/l) for antimony; or

(3) Five (5) times the maximum concentration value reported f
that pollutant(s) in the application.

b. That any activity has occurred or will occur which would resu
in any discharge, on a non-routine or infrequent basis, of
toxic pollutant (listed at 40 CFR 122, Appendix D. Table II a
III) which is not limited in the permit, if that discharge wi
exceed the highest of the following "notification levels":

(1) Five hundred Micrograms per liter (500 ug/l);

(2) One milligram per liter (1 mg/l) for antimony; or

(3) Ten (10) times the maximum concentration value reported f
that pollutant(s) in the permit application.

11. Duty to Reapply

If the permittee wishes to continue an activity regulated by this pe.
after the expiration date of this permit, the permittee must apply f
and obtain a new permit. The application should be submitted at lea
180 days before the expiration date of this permit. The Permit Issui
Authority may grant permission to submit an application less than 1
days in advance but not later than the permit expiration date.

Where EPA is the Permit Issuing Authority, the terms and conditions
this permit are automatically continued in accordance with 40 CFR 122.
only where the permittee has submitted a timely and complete applicati
for a renewal permit and the Permit Issuing Authority is unable throu
no fault of the permittee to issue a new permit before expiration dat

12. Signatory Requirements

All applications, reports, or information submitted to the Perm
Issuing Authority shall be signed and certified.

a. All permit applications shall be signed as follows:

3. Mass/Day Measurements

a. The "average monthly discharges" is defined and the total mass of all daily discharges sampled and/or measured during a calendar month on which daily discharges are sampled and measured, divided by the number of daily discharges sampled and/or measured during such month. It is therefore, and arithmetic mean found by adding the weights of the pollutant found each day of the month and then dividing this sum by the number of days the tests were reported. The limitation is identified as "Daily Average" or "Monthly Average" in Part I of the permit and the average monthly discharge value is reported in the "Average" column under "Quantity" on the Discharge Monitoring Report (DMR).

b. The "average weekly discharge" is defined as the total mass of all daily discharges sampled and/or measured during the calendar week on which daily discharges are sampled and measured, divided by the number of daily discharges sampled and/or measured during such week. It is, therefore, an arithmetic mean found by adding the weights of pollutants found each day of the week and then dividing this sum by the number of days the tests were reported. This limitation is identified as "Weekly Average" in Part I of the permit. Enter the highest weekly average of sample measurements obtained during the reporting period in the "Maximum" column under "Quantity" on the DMR.

c. The "maximum daily discharge" is the total mass (weight) of a pollutant discharged during a calendar day. If only one sample is taken during any calendar day the weight of pollutant calculated from it is the "maximum daily discharge". This limitation is identified as "Daily Maximum", in Part I of the permit and the highest such value recorded during the reporting period is reported in the "Maximum" column under "Quantity" on the DMR.

d. The "average annual discharge" is a rolling average equal to the arithmetic mean of the mass measured in all discharges sampled and/or measured during consecutive reporting periods which comprise one year. For parameters that are measured at least once per month, the annual average shall be computed at the end of each month and is equal to the arithmetic mean of the monthly average of the month being reported and the monthly average of each of the previous eleven months. This limitation is defined as "Annual Average" in Part I of the permit and the average annual discharge value is reported in the "Average" column under "Quantity" on the DMR.

4. Concentration Measurements

a. The "average monthly concentration", other than for fec coliform bacteria, is the sum of the concentrations of all dai discharges sampled and/or measured during a calendar montr which daily discharges are sampled and measured, divided by t number of daily discharges sampled and/or measured during su month (arithmetic mean of the daily concentration values). T daily concentration value is equal to the concentration of composite sample or in the case of grab samples is the arithmet mean (weighted by flow value) of all the samples collected duri that calendar day. This limitation is identified as "Month Average" or "Daily Average" under "Other Limits" in Part I of t permit and the average monthly concentration value is reporte under the "Average" column under "Quality" of the DMR.

b. The "average weekly concentration", other than for fecal colifor bacteria, is the sum of the concentrations of all dai discharges sampled and/or measured during a calendar week c which daily discharges are sampled and measured divided by th number of daily discharges sampled and/or measured during suc week (arithmetic mean of the daily concentration values). Th daily concentration value is equal to the concentration o composite sample or in the case of grab samples is the arithme mean (weighted by flow value) of all the samples collected dur that calendar day. This limitation is identified as "Wee Average" under "Other Limits" in Part I of the permit. Enter t highest weekly average of sample measurements obtained during th reporting period in the "Maximum" column under "Quality" on th DMR.

c. The "maximum daily concentration" is the concentration of a pollutant discharged during a calendar day. It is identified as "Daily Maximum" under "Other Units" in Part I of the permit and the highest such value recorded during the reporting period is reported under the "Maximum" column under "Quality" on the DMR.

d. The "average annual concentration", other than fecal coliform bacteria, is the rolling average equal to the arithmetic mean of the effluent or influent samples collected during consecutive reporting periods which comprise one year. For parameters that are measured at least once per month, the annual average shall be computed at the end of each month and is equal to the arithmetic mean of the monthly average of the month being reported and the monthly average of each of the previous eleven months. This limitation is identified as "Annual Average" under "Other Limits" in Part I of the permit and the average annu concentration value is reported under the "Average" column under "Quality" on the DMR.

5. Other Measurements

a. The effluent flow expressed as million gallons per day (MGD) is the 24 hour average flow averaged monthly. It is the arithmetic mean of the total daily flows recorded during the calendar month. Where monitoring requirements for flow are specified in Part I of the permit the flow rate values are reported in the "Average" column under "Quantity" on the DMR.

b. An "instantaneous flow measurement" is a measure of flow taken at the time of sampling, when both the sample and flow will be representative of the total discharge.

c. Where monitoring requirements for pH, dissolved oxygen or fecal coliform bacteria are specified in Part I of the permit, the values are generally reported in the "Quality or Concentration" column on the DMR.

d. The "average annual discharge" for fecal coliform bacteria shall be calculated in the same manner as that for mass limitations (see item II.E.3.d.).

6. Types of Samples

a. Composite Samples: A "composite sample" is a combination of not less than 8 influent or effluent portions, of at least 100 ml, collected over the full time period specified in Part I.A. The composite sample must be flow proportioned by either time interval between each aliquot or by volume as it relates to effluent flow at the time of sampling or total flow since collection of the previous aliquot. Aliquots may be collected manually or automatically.

b. Grab Samples: A "grab sample" is a single influent or effluent portion which is not a composite sample. The sample(s) shall be collected at the period(s) most representative of the total discharge.

7. Calculation of Means

a. Arithmetic Mean: The "arithmetic mean" of any set of values is the summation of the individual values divided by the number of individual values.

b. Geometric Mean: The "geometric mean" of any set of values is the Nth root of the product of the individual values where N is equal to the number of individual values. The geometric mean is equivalent to the antilog of the arithmetic mean of the logarithms of the individual values. For purposes of calculating the geometric mean, values of zero (0) shall be considered to be one (1).

c. Weighted by Flow Value: "Weighted by flow value" means th summation of each concentration times its respective flow divide by the summation of the respective flows.

8. Calendar Day

A "calendar day" is defined as the period from midnight of one day unti midnight of the next day. However, for purposes of this permit, ar consecutive 24-hour period that reasonably represents the calendar da may be used for sampling.

9. Hazardous Substance

A "hazardous substance" means any substance designated under 40 CFR Par 116 pursuant to Section 311 of the Clean Water Act.

10. Toxic Pollutants

A "toxic pollutant" is any pollutant listed as toxic under Secti 307(a)(1) of the Clean Water Act.

Part III

Other Requirements

A. Reporting of Monitoring Results

Monitoring results obtained for each calendar month shall be summarized and reported on a Discharge Monitoring Report (DMR) Form (EPA No. 3320-1). These forms shall be submitted after each calendar quarter and postmarked no later than the 28th day of the month following the completed calendar quarter. (For example, data for January-March shall be submitted by April 28.) Calendar quarters are January-March, April-June, July-September, and October-December. Signed copies of these, and all other reports required by Section D of Part II, Reporting Requirements, shall be submitted to the Permit Issuing Authority at the following address:

Environmental Protection Agency
Region IV
Enforcement Section
Water Permits and Enforcement Branch
Water Management Division
345 Courtland Street, N.E.
Atlanta, GA 30365

If no discharge occurs during the reporting period, sampling requirements of this permit do not apply. The statement "No Discharge" shall be written on the DMR form. If, during the term of this permit, the facility ceases discharge to surface waters, the Permit Issuing Authority and the State shall be notified immediately upon cessation of discharge. This notification shall be in writing.

B. Additional Definitions

"Report" means that monitoring and reporting is required, but that no limitations are applicable.

C. Erosion and Sediment Control

On the effective date of this permit, the permittee shall implement the Erosion and Sediment Control Plan dated July 31, 1991. Reports shall be submitted semiannually following the effective date of this permit, and shall state the effectiveness of the controls in minimizing water pollution. The first report shall be submitted with the DMR following the sixth full month after the effective date of this permit.

The plan including: (1) topographical map(s), (2) pollution control facilities planned, (3) all point and non-point source runoff sources to waters of the United States which could possibly be contaminated due to construction activities, (4) monitoring requirements for contaminated runoff sources and, (5) implementation schedule of areas of active construction and installation of control facilities and

procedures shall be a part of this permit. Control facilities to be used should include, but not necessarily be limited to, ponds, swales, dikes, silt curtains, riprap barriers and use of minimal slopes. Stabilization and revegetation (seeding sodding) of disturbed areas should be accomplished as soon as practicable after final grade is achieved. Should construction phase runoff pose a threat to water quality, additional measures shall be expeditiously implemented.

A responsible representative of Cedar Bay Cogeneration Project (CBCP) shall be designated to supervise this program, with necessary authority to expeditiously implement corrective action should problems be encountered. To assure that the plan and all control facilities are in proper operation, this representative shall tour the site not less than once per week and during any significant rainfall event. A permanent log of dates of observations, dates of entries, dates of actions, corrective actions required, actions taken, and implementation of corrective actions shall be maintained on site.

D. Erodible Material Storage

The permittee shall not store coal, soil, nor other similar erodible materials in a manner in which runoff is uncontrolled, nor conduct construction activities in a manner which produces uncontrolled runoff unless such uncontrolled runoff has been specifically approved by the Director. "Uncontrolled" shall mean without sedimentation basin or other controls approved by the Director. This permit may be modified to include limitations for the discharge from such facilities, when installed.

E. Detection Limits

If the concentration of a parameter is not detected using the applicable test method, the permittee shall report on the discharge monitoring report form, the analytical results as being measured at less than the minimum level for the test method selected; the test method shall also be reported.

F. Total Recoverable Metals and Phenolic Compounds Monitoring

1. For Outfalls 003 and/or 008, the following parameter shall be monitored during discharge to Outfall 001 thence the St. Johns River:

   Total Recoverable Copper, Total Recoverable Zinc, Total Recoverable Mercury, Total Recoverable Arsenic, Total Recoverable Antimony, Total Recoverable Beryllium, Total Recoverable Cadmium, Total Recoverable Lead, Total Recoverable Nickel, Phenol, Naphthalene, and Toluene

2. For Outfalls 003 and/or 008, the following parameters shall be monitored during emergency overflow discharge to the Broward River:

   Total Recoverable Copper, Total Recoverable Zinc, Total Recoverable Mercury, Total Recoverable Arsenic, Total Recoverable Antimony, Total Recoverable Beryllium, Total Recoverable Cadmium, Total Recoverable Lead, Total Recoverable Nickel, Phenol, Naphthalene, Toluene, Biochemical Oxygen Demand (5-Day), Total Organic Carbon, Dissolved Oxygen, Total Kjeldahl Nitrogen, Phosphorus, and Oil & Grease

The monitoring period shall be defined as a six month period, beginning on the first day of discharge, or the time required to obtain monitoring data from six discharge events, which ever occurs first. Based on results, the permittee may request that the monitoring frequency for any of the above pollutants be reduced or deleted. EPA may modify the permit to include an effluent limitation or any other appropriate permit conditions, if at any time during the monitoring period the sample data indicate that the effluent is contributing to a Class III water quality standard violation.

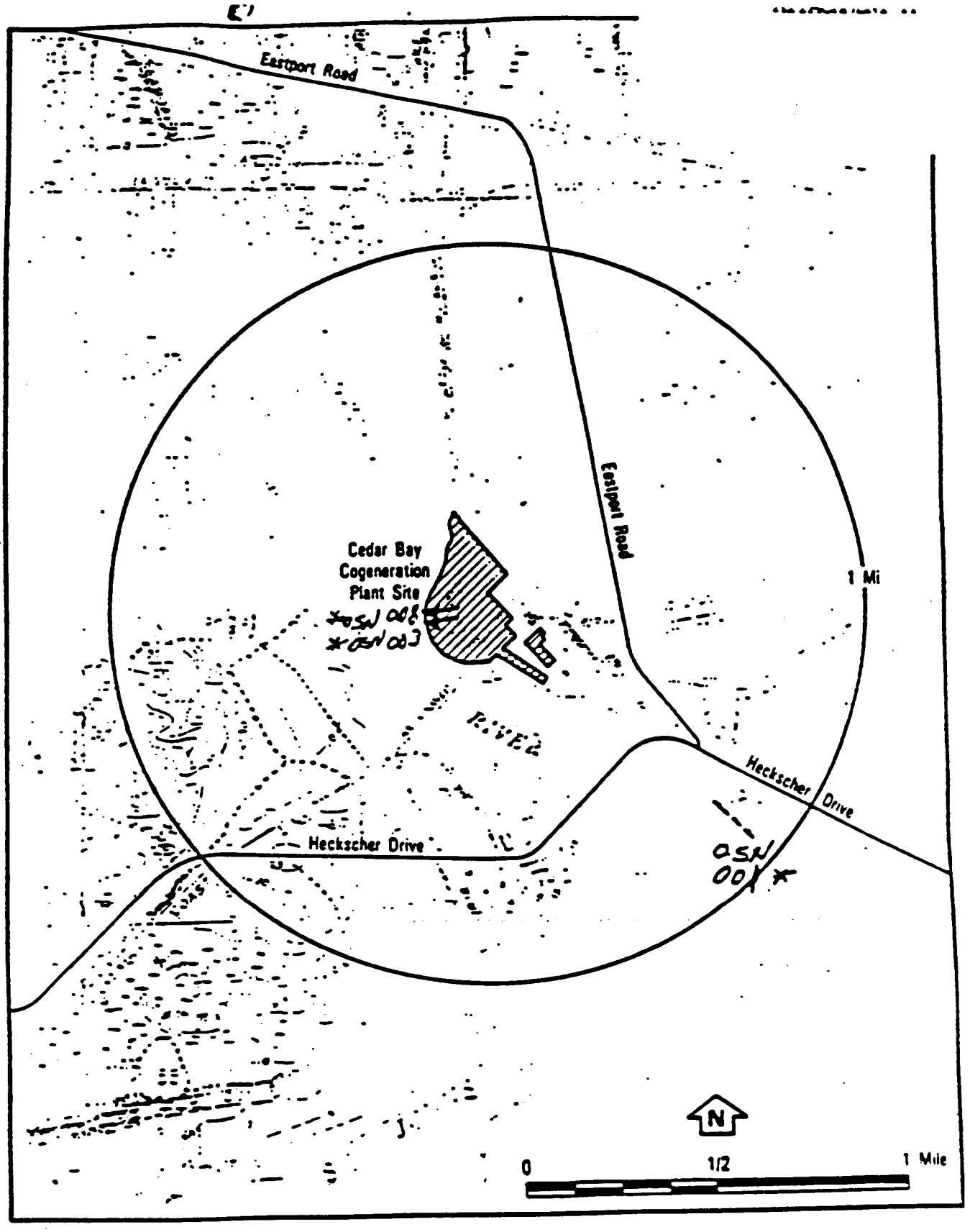

*OSN = OUTFALL SERIAL NUMBER

SITE LOCATION — 1-MILE RADIUS
(JACKSONVILLE, FLORIDA)

Figure 2-9

Florida Department of Environmental Regulation
Twin Towers Office Bldg. ● 2600 Blair Stone Road ● Tallahassee, Florida 32399-2400
Lawton Chiles, Governor
Carol M. Browner, Secretary

July 22, 1992

Mr. James H. Scarbrough, Chief
Water Permits and Enforcement Branch
United States Environmental
Protection Agency
345 Courtland Street, Northeast
Atlanta, Georgia 30308

Re: Waiver of State Certification
AES Cedar Bay, Incorporated/ Cedar Bay
Cogeneration Project
FL0041173

Dear Mr. Scarbrough:

On September 17, 1991, the EPA requested state certification of the draft NPDES permit for the AES Cedar Bay cogeneration facility discharges during construction located in Duval County, Florida (FL0041173). This letter provides official notification that the state reaffirms its waiver of certification for this permit. All effluent limits in the NPDES permit are at least as stringent as those specified in the state's permit for this facility.

Although the Department issued a letter dated November 13, 1991, waiving certification, several changes have been made since that time to the draft NPDES permit. Upon subsequent review of these changes, the Department finds the modifications resulted in a more stringent set of monitoring requirements, thus sustaining the basis for the original waiver letter.

If you have any questions regarding this facility, please contact Jan Mandrup-Poulsen at 904/488-4520.

Sincerely,

Robert E. Heilman

Robert E. Heilman, P.E., Chief
Bureau of Water Facilities
Planning and Regulation

REH/jmp

H-39

cc: Jerry Owen

UNITED STATES ENVIRONMENTAL PROTECTION AGENCY
REGION IV
345 COURTLAND STREET, N.E.
ATLANTA, GEORGIA 30365

FACT SHEET AMENDMENT
BASED ON COMMENTS RECEIVED DURING FEBRUARY 6, 1992 - MARCH 18, 1992

NPDES PERMIT NUMBER: FL0041173 DATE: [illegible] 22 1992

NAME OF APPLICANT: AES/Cedar Bay, Inc.

This amendment to the March 11, 1992 Fact Sheet addresses the comments received during the public notice period from February 6, 1992 to March 18, 1992. The permit has been revised as follows:

1. <u>Changes to the Permit from Draft Permit to Final Permit Stage</u>

a. <u>Page I-1.</u> Monitoring requirements for the following pollutants were added. These requirements are applicable during periods of discharge from Outfall 003 to Outfall 001:

Total Recoverable Copper, Total Recoverable Zinc, Total Recoverable Mercury, Total Recoverable Arsenic, Total Recoverable Antimony, Total Recoverable Beryllium, Total Recoverable Cadmium, Total Recoverable Lead, Total Recoverable Nickel, Phenol, Naphthalene, Toluene

b. <u>Page I-2.</u> Item 7 was added. The language pertains to additional monitoring requirement during emergency overflow discharge periods from Outfall 003 to the Broward River. Item 7 states:

"Storm water runoff in excess of the 10-year, 24-hr rainfall event may be discharged to the Broward River. However, during periods of such a discharge, the permittee shall monitor for the following pollutants once per day of discharge by grab sample:

Total Suspended Solids
Total Recoverable Copper
Total Recoverable Arsenic
Total Recoverable Beryllium
Total Recoverable Chromium
Total Recoverable Nickel
Naphthalene
Biochemical Oxygen Demand
Dissolved Oxygen
Phosphorus
Total Recoverable Mercury
Total Recoverable Zinc
Total Recoverable Antimony
Total Recoverable Cadmium
Total Recoverable Lead
Phenol
Toluene
Total Organic Carbon
Total Kjeldahl Nitrogen
Oil and Grease

Printed on Recycled Paper

Unit of measure shall be mg/l and the results shall be attached to and submitted with the Discharge Monitoring Report form (DMR). See Part III.F for additional permit conditions.

Footnote 3/, which is referenced on page I-1, was added. It refers to the monitoring requirements for the metals and phenolic compounds on page I-1. It states:

"Monitoring for this parameter is only required when a discharge occurs."

c. Page I-3. Monitoring requirements for Outfall 008 were added for the same pollutants listed in 1.a. of this amended fact sheet.

d. Page I-4. The same language mentioned in 1.b. of this amended fact sheet was added.

e. Page III-2. Item E. was added. It states:

"If the concentration of a parameter is not detected using the applicable test method, the permittee shall report on the discharge monitoring report form, the analytical results as being measured at less than the minimum level for the test method selected; the test method shall also be reported."

f. Page III-3. Item F was added. It states:

"1. For Outfalls 003 and/or 008, the following parameters shall be monitored during discharge to Outfall 001 thence the St. Johns River:

Total Recoverable Copper, Total Recoverable Zinc, Total Recoverable Mercury, Total Recoverable Arsenic, Total Recoverable Antimony, Total Recoverable Beryllium, Total Recoverable Cadmium, Total Recoverable Lead, Total Recoverable Nickel, Phenol, Naphthalene, and Toluene

2. For Outfalls 003 and/or 008, the following parameters shall be monitored during emergency overflow discharge to the Broward River:

Total Recoverable Copper, Total Recoverable Zinc, Total Recoverable Mercury, Total Recoverable Arsenic, Total Recoverable Antimony, Total Recoverable Beryllium, Total Recoverable Cadmium, Total Recoverable Lead, Total Recoverable Nickel, Phenol, Naphthalene, Toluene, Biochemical Oxygen Demand (5-Day), Total Organic Carbon, Dissolved Oxygen, Total Kjeldahl Nitrogen, Phosphorus, and Oil & Grease

The monitoring period shall be defined as a six month period, beginning on the first day of discharge, or the time required to obtain monitoring data from six discharge events, which ever occurs first. Based on results, the permittee may request that the monitoring frequency for any of the above pollutants be reduced or deleted. EPA will reopen the permit to include an effluent limitation, or any other appropriate permit conditions, if at any time during the monitoring period the sample data indicate that the effluent is contributing to a Class III water quality standard violation."

The inclusion of the aforementioned monitoring requirements are incorporated based on the best professional judgement of the permit writer and on Section 308(a) of the Clean Water Act. Selection of parameters is based on information submitted by the City of Jacksonville, Department of Regulatory and Environmental Services.

2. Public Comments

See attachment for EPA's responses to oral comments made during the public hearing held on March 11, 1992, as well as written comments received during the comment period.

3. State Certification

On September 17, 1991, EPA requested the Florida Department of Environmental Regulation (FDER) provide Section 401 certification on the terms and provisions of the draft permit. FDER waived certification by letter dated November 13, 1991. Since several changes were made to the draft permit since the November 13, 1991 waiver, FDER reaffirmed its waiver of certification by letter dated July 22, 1992.

DISCHARGE MONITORING REPORT
GENERAL INSTRUCTIONS FOR COMPLETION

1. Monitoring Period - Fill in the monitoring period as provided for on the DMR. The monitoring period begins on the first day of the month and ends on the last.

2. Completion of Reported Values - For each parameter limited or monitored, the computed values must be entered.

3. Quantity or Loading (lbs/day or kg/day) - The "average monthly discharge" is the total of the daily loads (in pounds) as derived from each day's calculated measurement divided by the number of days during the month the measurements were made. In completing calculations for these averages, quantities or loadings are to be reported in lbs/day or kg/day using the following equations:

   Quantity (lbs/day) = Flow (MGD) x concentration (mg/l) x 8.34
   Quantity (kg/day) = Flow (MGD) x concentration (mg/l) x 3.79

4. Frequency of Analysis - Enter frequency of analysis which is the actual frequency of sampling and analysis used during the monitoring period; the minimum is as specified in the permit and on the DMR.

   All monitoring frequency requirements of the permit are minimum requirements. The results of any additional monitoring of parameters at the location(s) designated in the permit, using the approved analytical methods, must be included on the DMR. Such increased frequency should also be indicated on the DMR.

5. Sample Type - Enter the sample type as Sample Measurement (actual sample type used during the monitoring period.

6. No. Ex. (Number of Exceptions) - Enter the number of sample measurements as calculated values for the monitoring period that exceed (maximum and/or minimum, 7-day average, etc.) the permit requirements for each parameter. The number should be the total of all exceptions during the reporting period, including quantity and quality limits. If none occurred, then enter "0".

7. If no discharge occurs during the month, a report must still be submitted. Simply enter "No Discharge" across the face of the DMR for that reporting month.

8. When violations of permit conditions are reported, attach a brief explanation describing the cause of the violation and any corrective actions taken. Reference each violation by date.

9. Complete the bottom of the DMR with the name and title of the principal executive officers, the date, and the telephone number, along with the signature of the principal officer or authorized agent. Each sheet must be signed.

10. Mail a copy to the appropriate EPA office and keep one copy on file at the permittee's lab or office.

44-44

(blank)

Facility N. (Location if different)

NAME Paul Stinson

ADDRESS AES/Cedar Bay, Inc.
9469 Eastport Road
Jacksonville, FL

FACILITY AES/Cedar Bay Cogeneration Projec

LOCATION Jacksonville, FL

DISCHAR (2-1) NITORING REPORT (DMR) (17-19)

FL004[illegible]/3 — PERMIT NUMBER

003 1 — DISCHARGE NUMBER

FINAL

MONITORING PERIOD

FROM YEAR (20-21)	MO (22-23)	DAY (24-25)	TO YEAR (26-27)	MO (28-29)	DAY (30-31)

MINOR

NOTE: Read instructions before completing this form.

PARAMETER (32-37)		(3 Card Only) (46-53) QUANTITY OR LOADING (54-61) AVERAGE	MAXIMUM	UNITS	(4 Card Only) (38-45) QUALITY OR CONCENTRATION (46-53) MINIMUM	AVERAGE	(54-61) MAXIMUM	UNITS	NO. EX (62-63)	FREQUENCY OF ANALYSIS (64-68)	SAMPLE TYPE (69-70)
FLOW, IN CONDUIT OR THRU TREATMENT PLANT 50050 1 0 EFFLUENT GROSS VALUE	SAMPLE MEASUREMENT	********		MGD	********	********	********	****			
	PERMIT REQUIREMENT	********	REPORT INST MX		********	********	********	****		WEEKLY	PMPLOG
SOLIDS, TOTAL SUSPENDED 00530 1 0 EFFLUENT GROSS VALUE	SAMPLE MEASUREMENT	********	********	****	********	********		MG/L			
	PERMIT REQUIREMENT	********	********	****	********	********	50 INST MX			WEEKLY	GRAB
PH 00400 1 0 EFFLUENT GROSS VALUE	SAMPLE MEASUREMENT	********	********	****		********		SU			
	PERMIT REQUIREMENT	********	********	****	6.5 MINIMUM	********	8.5 MAXIMUM			WEEKLY	GRAB
Total Recoverable Copper 01119 1 0 EFFLUENT GROSS VALUE	SAMPLE MEASUREMENT	********	********	****	********	********		MG/L			
	PERMIT REQUIREMENT	********	********	****	********	********	REPORT INST MX			ONCE/ 2WEEKS	GRAB
MERCURY TOTAL RECOVERABLE 71901 1 0 EFFLUENT GROSS VALUE	SAMPLE MEASUREMENT	********	********	****	********	********		MG/L			
	PERMIT REQUIREMENT	********	********	****	********	********	REPORT INST MX			ONCE/ 2WEEKS	GRAB
ARSENIC, TOTAL RECOVERABLE 00978 1 0 EFFLUENT GROSS VALUE	SAMPLE MEASUREMENT	********	********	****	********	********		MG/L			
	PERMIT REQUIREMENT	********	********	****	********	********	REPORT INST MX			ONCE/ 2WEEKS	GRAB
ANTIMONY, TOTAL RECOVERABLE 01260 1 0 EFFLUENT GROSS VALUE	SAMPLE MEASUREMENT	********	********	****	********	********		MG/L			
	PERMIT REQUIREMENT	********	********	****	********	********	REPORT INST MX			ONCE/ 2WEEKS	GRAB

NAME/TITLE PRINCIPAL EXECUTIVE OFFICER

TYPED OR PRINTED

I CERTIFY UNDER PENALTY OF LAW THAT I HAVE PERSONALLY EXAMINED AND AM FAMILIAR WITH THE INFORMATION SUBMITTED HEREIN; AND BASED ON MY INQUIRY OF THOSE INDIVIDUALS IMMEDIATELY RESPONSIBLE FOR OBTAINING THE INFORMATION, I BELIEVE THE SUBMITTED INFORMATION IS TRUE, ACCURATE AND COMPLETE. I AM AWARE THAT THERE ARE SIGNIFICANT PENALTIES FOR SUBMITTING FALSE INFORMATION, INCLUDING THE POSSIBILITY OF FINE AND IMPRISONMENT. SEE 18 U.S.C. § 1001 AND 33 U.S.C. § 1319. (Penalties under these statutes may include fines up to $10,000 and/or maximum imprisonment of between 6 months and 5 years.)

SIGNATURE OF PRINCIPAL EXECUTIVE OFFICER OR AUTHORIZED AGENT

TELEPHONE: AREA CODE, NUMBER

DATE: YEAR, MO, DAY

COMMENT AND EXPLANATION OF ANY VIOLATIONS (Reference all attachments here)

This outfall has an intermittent discharge to Outfall 001.

54-A

☆ U.S. GOVERNMENT PRINTING OFFICE 1989-241-124/07211

NAME aul Stinson
ADDRESS AES/Cedar Bay, Inc.
9469 Eastport Road
Jacksonville, FL
FACILITY AES/Cedar Bay Cogeneration Projec
LOCATION Jacksonville, FL

DISCHARGE MONITORING REPORT (DMR)

PERMIT NUMBER (2-16)	DISCHARGE NUMBER (17-19)
FL0041 J	003 1

FINAL

MONITORING PERIOD

FROM YEAR (20-21)	MO (22-23)	DAY (24-25)	TO YEAR (26-27)	MO (28-29)	DAY (30-31)

MINOR

NOTE: Read instructions before completing this form.

PARAMETER (32-37)		QUANTITY OR LOADING (3 Card Only) (46-53) AVERAGE	(54-61) MAXIMUM	UNITS	QUALITY OR CONCENTRATION (4 Card Only) (38-45) MINIMUM	(46-53) AVERAGE	(54-61) MAXIMUM	UNITS	NO. EX (62-63)	FREQUENCY OF ANALYSIS (64-68)	SAMPLE TYPE (69-70)
BERYLLIUM, TOTAL RECOVERABLE (AS BE) 00998 1 0 EFFLUENT GROSS VALUE	SAMPLE MEASUREMENT	********	********	****	********	********		MG/L			
	PERMIT REQUIREMENT	********	********	****	********	********	REPORT INST MX			ONCE/ 2WEEKS	GRAB
CADMIUM TOTAL RECOVERABLE 01113 1 0 EFFLUENT GROSS VALUE	SAMPLE MEASUREMENT	********	********	****	********	********		MG/L			
	PERMIT REQUIREMENT	********	********	****	********	********	REPORT INST MX			ONCE/ 2WEEKS	GRAB
LEAD TOTAL RECOVERABLE 01114 1 0 EFFLUENT GROSS VALUE	SAMPLE MEASUREMENT	********	********	****	********	********		MG/L			
	PERMIT REQUIREMENT	********	********	****	********	********	REPORT INST MX			ONCE/ 2WEEKS	GRAB
NICKEL, TOTAL (AS NI) 01067 1 0 EFFLUENT GROSS VALUE	SAMPLE MEASUREMENT	********	********	****	********	********		MG/L			
	PERMIT REQUIREMENT	********	********	****	********	********	REPORT INST MX			ONCE/ 2WEEKS	GRAB
ZINC TOTAL RECOVERABLE 01094 1 0 EFFLUENT GROSS VALUE	SAMPLE MEASUREMENT	********	********	****	********	********		MG/L			
	PERMIT REQUIREMENT	********	********	****	********	********	REPORT INST MX			ONCE/ 2WEEKS	GRAB
NAPHTHALENE 34696 1 0 EFFLUENT GROSS VALUE	SAMPLE MEASUREMENT	********	********	****	********	********		MG/L			
	PERMIT REQUIREMENT	********	********	****	********	********	REPORT INST MX			ONCE/ 2WEEKS	GRAB
TOLUENE 34010 1 0 EFFLUENT GROSS VALUE	SAMPLE MEASUREMENT	********	********	****	********	********		MG/L			
	PERMIT REQUIREMENT	********	********	****	********	********	REPORT INST MX			ONCE/ 2WEEKS	GRAB

NAME/TITLE PRINCIPAL EXECUTIVE OFFICER

TYPED OR PRINTED

I CERTIFY UNDER PENALTY OF LAW THAT I HAVE PERSONALLY EXAMINED AND AM FAMILIAR WITH THE INFORMATION SUBMITTED HEREIN, AND BASED ON MY INQUIRY OF THOSE INDIVIDUALS IMMEDIATELY RESPONSIBLE FOR OBTAINING THE INFORMATION, I BELIEVE THE SUBMITTED INFORMATION IS TRUE, ACCURATE AND COMPLETE. I AM AWARE THAT THERE ARE SIGNIFICANT PENALTIES FOR SUBMITTING FALSE INFORMATION, INCLUDING THE POSSIBILITY OF FINE AND IMPRISONMENT SEE 18 U.S.C. § 1001 AND 33 U.S.C. § 1319 (Penalties under these sections may include fines up to $10,000 and or maximum imprisonment of between 6 months and 5 years.)

SIGNATURE OF PRINCIPAL EXECUTIVE OFFICER OR AUTHORIZED AGENT

TELEPHONE: AREA CODE, NUMBER

DATE: YEAR, MO, DAY

COMMENT AND EXPLANATION OF ANY VIOLATIONS (Reference all attachments here)

This outfall has an intermittent discharge to Outfall 001.

97-H

EPA Form 3320-1 (Rev. 9-88) Previous editions may be used. (REPLACES EPA FORM 1-40 WHICH MAY NOT BE USED.)

☆ U.S. GOVERNMENT PRINTING OFFICE 1988-241-124/07211

Form Location (if different)

NAME Paul Stinson

ADDR AES/Cedar Bay, Inc.
9469 Eastport Road
Jacksonville, FL

FACILITY AES/Cedar Bay Cogeneration Projec

LOCATION Jacksonville, FL

DISCHARGE MONITORING REPORT (DMR) (17-19)

FINAL

PERMIT NUMBER	DISCHARGE NUMBER
FL00..173	003 1

MONITORING PERIOD

FROM YEAR (20-21)	MO (22-23)	DAY (24-25)	TO YEAR (26-27)	MO (28-29)	DAY (30-31)

MINOR

NOTE: Read instructions before completing this form.

PARAMETER (32-37)		(3 Card Only) QUANTITY OR LOADING (46-53) AVERAGE	(54-61) MAXIMUM	UNITS	(4 Card Only) QUALITY OR CONCENTRATION (38-45) MINIMUM	(46-53) AVERAGE	(54-61) MAXIMUM	UNITS	NO. EX (62-63)	FREQUENCY OF ANALYSIS (64-68)	SAMPLE TYPE (69-70)
PHENOLS	SAMPLE MEASUREMENT	********	********	****	********	********		MG/L			
6000 1 0 EFFLUENT GROSS VALUE	PERMIT REQUIREMENT	********	********	****	********	********	REPORT INST MX			ONCE/ 2WEEKS	GRAB
	SAMPLE MEASUREMENT										
	PERMIT REQUIREMENT										
	SAMPLE MEASUREMENT										
	PERMIT REQUIREMENT										
	SAMPLE MEASUREMENT										
	PERMIT REQUIREMENT										
	SAMPLE MEASUREMENT										
	PERMIT REQUIREMENT										
	SAMPLE MEASUREMENT										
	PERMIT REQUIREMENT										
	SAMPLE MEASUREMENT										
	PERMIT REQUIREMENT										

NAME/TITLE PRINCIPAL EXECUTIVE OFFICER

TYPED OR PRINTED

I CERTIFY UNDER PENALTY OF LAW THAT I HAVE PERSONALLY EXAMINED AND AM FAMILIAR WITH THE INFORMATION SUBMITTED HEREIN, AND BASED ON MY INQUIRY OF THOSE INDIVIDUALS IMMEDIATELY RESPONSIBLE FOR OBTAINING THE INFORMATION I BELIEVE THE SUBMITTED INFORMATION IS TRUE, ACCURATE AND COMPLETE. I AM AWARE THAT THERE ARE SIGNIFICANT PENALTIES FOR SUBMITTING FALSE INFORMATION, INCLUDING THE POSSIBILITY OF FINE AND IMPRISONMENT. SEE 18 U.S.C. § 1001 AND 33 U.S.C. § 1319. *(Penalties under these statutes may include fines up to $10,000 and or maximum imprisonment of between 6 months and 5 years.)*

SIGNATURE OF PRINCIPAL EXECUTIVE OFFICER OR AUTHORIZED AGENT

TELEPHONE AREA CODE	NUMBER	DATE YEAR	MO	DAY

COMMENT AND EXPLANATION OF ANY VIOLATIONS *(Reference all attachments here)*

This outfall has an intermittent discharge to Outfall 001.

H-4

☆ U.S. GOVERNMENT PRINTING OFFICE 1989-241-124/07211

NAME Paul Stinson
ADDRESS AES/Cedar Bay, Inc.
9469 Eastport Road
Jacksonville, FL 32218
FACILITY AES/Cedar Bay Cogeneration Projec
LOCATION Jacksonville, FL

(2) PERMIT NUMBER: FL004_ _3
(17-19) DISCHARGE NUMBER: 003 2

FINAL

MONITORING PERIOD
FROM YEAR (20-21) MO (22-23) DAY (24-25) TO YEAR (26-27) MO (28-29) DAY (30-31)

MINOR

NOTE: Read instructions before completing this form.

PARAMETER (32-37)		(3 Card Only) (46-53) QUANTITY OR LOADING (54-61) AVERAGE	MAXIMUM	UNITS	(4 Card Only) (38-45) QUALITY OR CONCENTRATION (46-53) MINIMUM	AVERAGE	(54-61) MAXIMUM	UNITS	NO. EX (62-63)	FREQUENCY OF ANALYSIS (64-68)	SAMPLE TYPE (69-70)
SOLIDS, TOTAL SUSPENDED	SAMPLE MEASUREMENT	********	********	****	********	********		MG/L			
00530 1 0 EFFLUENT GROSS VALUE	PERMIT REQUIREMENT	********	********	****	********	********	REPORT INST MX			ONCE/ DSCHDY	GRAB
COPPER TOTAL RECOVERABLE	SAMPLE MEASUREMENT	********	********	****	********	********		MG/L			
01119 1 0 EFFLUENT GROSS VALUE	PERMIT REQUIREMENT	********	********	****	********	********	REPORT INST MX			ONCE/ DSCHDY	GRAB
MERCURY TOTAL RECOVERABLE	SAMPLE MEASUREMENT	********	********	****	********	********		MG/L			
71901 1 0 EFFLUENT GROSS VALUE	PERMIT REQUIREMENT	********	********	****	********	********	REPORT INST MX			ONCE/ DSCHDY	GRAB
ARSENIC, TOTAL RECOVERABLE	SAMPLE MEASUREMENT	********	********	****	********	********		MG/L			
00978 1 0 EFFLUENT GROSS VALUE	PERMIT REQUIREMENT	********	********	****	********	********	REPORT INST MX			ONCE/ DSCHDY	GRAB
ANTIMONY, TOTAL RECOVERABLE	SAMPLE MEASUREMENT	********	********	****	********	********		MG/L			
01268 1 0 EFFLUENT GROSS VALUE	PERMIT REQUIREMENT	********	********	****	********	********	REPORT INST MX			ONCE/ DSCHDY	GRAB
BERYLLIUM, TOTAL RECOVERABLE (AS BE)	SAMPLE MEASUREMENT	********	********	****	********	********		MG/L			
00998 1 0 EFFLUENT GROSS VALUE	PERMIT REQUIREMENT	********	********	****	********	********	REPORT INST MX			ONCE/ DSCHDY	GRAB
CADMIUM TOTAL RECOVERABLE	SAMPLE MEASUREMENT	********	********	****	********	********		MG/L			
01113 1 0 EFFLUENT GROSS VALUE	PERMIT REQUIREMENT	********	********	****	********	********	REPORT INST MX			ONCE/ DSCHDY	GRAB

NAME/TITLE PRINCIPAL EXECUTIVE OFFICER

TYPED OR PRINTED

I CERTIFY UNDER PENALTY OF LAW THAT I HAVE PERSONALLY EXAMINED AND AM FAMILIAR WITH THE INFORMATION SUBMITTED HEREIN, AND BASED ON MY INQUIRY OF THOSE INDIVIDUALS IMMEDIATELY RESPONSIBLE FOR OBTAINING THE INFORMATION I BELIEVE THE SUBMITTED INFORMATION IS TRUE, ACCURATE AND COMPLETE. I AM AWARE THAT THERE ARE SIGNIFICANT PENALTIES FOR SUBMITTING FALSE INFORMATION, INCLUDING THE POSSIBILITY OF FINE AND IMPRISONMENT. SEE 18 U.S.C. § 1001 AND 33 U.S.C. § 1319 *(Penalties under these statutes may include fines up to $10,000 and or maximum imprisonment of between 6 months and 5 years.)*

SIGNATURE OF PRINCIPAL EXECUTIVE OFFICER OR AUTHORIZED AGENT

TELEPHONE: AREA CODE, NUMBER

DATE: YEAR, MO, DAY

COMMENT AND EXPLANATION OF ANY VIOLATIONS *(Reference all attachments here)*

This outfall has an intermittent discharge to the Broward River during storms in excess of the 10Y24H event

87-H

☆ U.S. GOVERNMENT PRINTING OFFICE 1988-241-124/07211

Facility Name (if different)

NAME Jul Stinson

ADDRESS AES/Cedar Bay, Inc.
9469 Eastport Road
Jacksonville, FL 32218

FACILITY AES/Cedar Bay Cogeneration Projec

LOCATION Jacksonville, FL

DISCHARGE MONITORING REPORT (DMR)

PERMIT NUMBER (2-16): FL00411 3

DISCHARGE NUMBER (17-19): 003 2

FINAL

MONITORING PERIOD

FROM YEAR	MO	DAY	TO YEAR	MO	DAY
(20-21)	(22-23)	(24-25)	(26-27)	(28-29)	(30-31)

MINOR

NOTE: Read instructions before completing this form.

PARAMETER (32-37)		QUANTITY OR LOADING (46-53) AVERAGE	QUANTITY OR LOADING (54-61) MAXIMUM	UNITS	QUALITY OR CONCENTRATION (46-53) MINIMUM	QUALITY OR CONCENTRATION (46-53) AVERAGE	QUALITY OR CONCENTRATION (54-61) MAXIMUM	UNITS	NO. EX (62-63)	FREQUENCY OF ANALYSIS (64-68)	SAMPLE TYPE (69-70)
LEAD TOTAL RECOVERABLE	SAMPLE MEASUREMENT	********	********	****	********	********		MG/L			
01114 1 0 EFFLUENT GROSS VALUE	PERMIT REQUIREMENT	********	********	****	********	********	REPORT INST MX			ONCE/ DSCHDY	GRAB
NICKEL TOTAL RECOVERABLE	SAMPLE MEASUREMENT	********	********	****	********	********		MG/L			
01074 1 0 EFFLUENT GROSS VALUE	PERMIT REQUIREMENT	********	********	****	********	********	REPORT INST MX			ONCE/ DSCHDY	GRAB
ZINC TOTAL RECOVERABLE	SAMPLE MEASUREMENT	********	********	****	********	********		MG/L			
01094 1 0 EFFLUENT GROSS VALUE	PERMIT REQUIREMENT	********	********	****	********	********	REPORT INST MX			ONCE/ DSCHDY	GRAB
CHROMIUM TOTAL RECOVERABLE	SAMPLE MEASUREMENT	********	********	****	********	********		MG/L			
01118 1 0 EFFLUENT GROSS VALUE	PERMIT REQUIREMENT	********	********	****	********	********	REPORT INST MX			ONCE/ DSCHDY	GRAB
TOLUENE	SAMPLE MEASUREMENT	********	********	****	********	********		MG/L			
34010 1 0 EFFLUENT GROSS VALUE	PERMIT REQUIREMENT	********	********	****	********	********	REPORT INST MX			ONCE/ DSCHDY	GRAB
NAPHTHALENE	SAMPLE MEASUREMENT	********	********	****	********	********		MG/L			
34696 1 0 EFFLUENT GROSS VALUE	PERMIT REQUIREMENT	********	********	****	********	********	REPORT INST MX			ONCE/ DSCHDY	GRAB
PHENOLS	SAMPLE MEASUREMENT	********	********	****	********	********		MG/L			
46000 1 0 EFFLUENT GROSS VALUE	PERMIT REQUIREMENT	********	********	****	********	********	REPORT INST MX			ONCE/ DSCHDY	GRAB

NAME/TITLE PRINCIPAL EXECUTIVE OFFICER

TYPED OR PRINTED

I CERTIFY UNDER PENALTY OF LAW THAT I HAVE PERSONALLY EXAMINED AND AM FAMILIAR WITH THE INFORMATION SUBMITTED HEREIN; AND BASED ON MY INQUIRY OF THOSE INDIVIDUALS IMMEDIATELY RESPONSIBLE FOR OBTAINING THE INFORMATION I BELIEVE THE SUBMITTED INFORMATION IS TRUE, ACCURATE AND COMPLETE. I AM AWARE THAT THERE ARE SIGNIFICANT PENALTIES FOR SUBMITTING FALSE INFORMATION, INCLUDING THE POSSIBILITY OF FINE AND IMPRISONMENT. SEE 18 U.S.C. § 1001 AND 33 U.S.C. § 1319. *(Penalties under these statutes may include fines up to $10,000 and or maximum imprisonment of between 6 months and 5 years.)*

SIGNATURE OF PRINCIPAL EXECUTIVE OFFICER OR AUTHORIZED AGENT

TELEPHONE: AREA CODE, NUMBER

DATE: YEAR, MO, DAY

COMMENT AND EXPLANATION OF ANY VIOLATIONS *(Reference all attachments here)*

This outfall has an intermittent discharge to the Broward River during storms in excess of the 10Y24H event

H-49

☆ U.S. GOVERNMENT PRINTING OFFICE 1989-241-124/07211

PERMIT Facility NAME/ADDRESS (Include name if different)

NAME: Paul Stinson
ADDRESS: AES/Cedar Bay, Inc.
9469 Eastport Road
Jacksonville, FL 32218
FACILITY: AES/Cedar Bay Cogeneration Projec
LOCATION: Jacksonville, FL

NATIONAL POLLUTANT DISCHARGE ELIMINATION SYSTEM (NPDES) MONITORING REPORT (DMR)

PERMIT NUMBER: FL0041173
DISCHARGE NUMBER: 003 2 (17-19)

FINAL

MONITORING PERIOD

FROM YEAR	MO	DAY	TO YEAR	MO	DAY
(20-21)	(22-23)	(24-25)	(26-27)	(28-29)	(30-31)

MINOR

NOTE: Read instructions before completing this form.

PARAMETER (32-37)		(3 Card Only) (46-53) QUANTITY OR LOADING (54-61) AVERAGE	MAXIMUM	UNITS	(4 Card Only) (38-45) QUALITY OR CONCENTRATION (46-53) MINIMUM	AVERAGE	(54-61) MAXIMUM	UNITS	NO. EX (62-63)	FREQUENCY OF ANALYSIS (64-68)	SAMPLE TYPE (69-70)
BOD, 5-DAY (20 DEG. C) 00310 1 0 EFFLUENT GROSS VALUE	SAMPLE MEASUREMENT	********	********	****	********	********		MG/L			
	PERMIT REQUIREMENT	********	********	****	********	********	REPORT INST MX			ONCE/ DSCHDY	GRAB
CARBON, TOT ORGANIC (TOC) 00680 1 0 EFFLUENT GROSS VALUE	SAMPLE MEASUREMENT	********	********	****	********	********		MG/L			
	PERMIT REQUIREMENT	********	********	****	********	********	REPORT INST MX			ONCE/ DSCHDY	GRAB
OXYGEN, DISSOLVED (DO) 00300 1 0 EFFLUENT GROSS VALUE	SAMPLE MEASUREMENT	********	********	****	********	********		MG/L			
	PERMIT REQUIREMENT	********	********	****	********	********	REPORT INST MX			ONCE/ DSCHDY	GRAB
NITROGEN, KJELDAHL TOTAL (AS N) 00625 1 0 EFFLUENT GROSS VALUE	SAMPLE MEASUREMENT	********	********	****	********	********		MG/L			
	PERMIT REQUIREMENT	********	********	****	********	********	REPORT INST MX			ONCE/ DSCHDY	GRAB
PHOSPHORUS, TOTAL (AS P) 00665 1 0 EFFLUENT GROSS VALUE	SAMPLE MEASUREMENT	********	********	****	********	********		MG/L			
	PERMIT REQUIREMENT	********	********	****	********	********	REPORT INST MX			ONCE/ DSCHDY	GRAB
OIL AND GREASE FREON EXT-GRAY METH 00556 1 0 EFFLUENT GROSS VALUE	SAMPLE MEASUREMENT	********	********	****	********	********		MG/L			
	PERMIT REQUIREMENT	********	********	****	********	********	REPORT INST MX			ONCE/ DSCHDY	GRAB
	SAMPLE MEASUREMENT										
	PERMIT REQUIREMENT										

NAME/TITLE PRINCIPAL EXECUTIVE OFFICER

TYPED OR PRINTED

I CERTIFY UNDER PENALTY OF LAW THAT I HAVE PERSONALLY EXAMINED AND AM FAMILIAR WITH THE INFORMATION SUBMITTED HEREIN, AND BASED ON MY INQUIRY OF THOSE INDIVIDUALS IMMEDIATELY RESPONSIBLE FOR OBTAINING THE INFORMATION, I BELIEVE THE SUBMITTED INFORMATION IS TRUE, ACCURATE AND COMPLETE. I AM AWARE THAT THERE ARE SIGNIFICANT PENALTIES FOR SUBMITTING FALSE INFORMATION, INCLUDING THE POSSIBILITY OF FINE AND IMPRISONMENT. SEE 18 U.S.C. § 1001 AND 33 U.S.C. § 1319 (Penalties under these statutes may include fines up to $10,000 and or maximum imprisonment of between 6 months and 5 years.)

SIGNATURE OF PRINCIPAL EXECUTIVE OFFICER OR AUTHORIZED AGENT

TELEPHONE: AREA CODE, NUMBER

DATE: YEAR, MO, DAY

COMMENT AND EXPLANATION OF ANY VIOLATIONS (Reference all attachments here)

This outfall has an intermittent discharge to the Broward River during storms in excess of the 10Y24H event

H-50

☆ U.S. GOVERNMENT PRINTING OFFICE 1988-241-124/07211

NAME aul Stinson
ADDRESS AES/Cedar Bay, Inc.
9469 Eastport Road
Jacksonville, FL
FACILITY AES/Cedar Bay Cogeneration Projec
LOCATION Jacksonville, FL

DISCHARGE MONITORING REPORT (DMR)

PERMIT NUMBER (2-16): FL0041. J

DISCHARGE NUMBER (17-19): 008 1

FINAL

MONITORING PERIOD

FROM YEAR (20-21)	MO (22-23)	DAY (24-25)	TO YEAR (26-27)	MO (28-29)	DAY (30-31)

MINOR

NOTE: Read Instructions before completing this form.

PARAMETER (32-37)		QUANTITY OR LOADING (3 Card Only) (46-53) AVERAGE	(54-61) MAXIMUM	UNITS	QUALITY OR CONCENTRATION (4 Card Only) (38-45) MINIMUM	(46-53) AVERAGE	(54-61) MAXIMUM	UNITS	NO. EX (62-63)	FREQUENCY OF ANALYSIS (64-68)	SAMPLE TYPE (69-70)
FLOW, IN CONDUIT OR THRU TREATMENT PLANT	SAMPLE MEASUREMENT	********		MGD	********	********	********	****			
50050 1 0 EFFLUENT GROSS VALUE	PERMIT REQUIREMENT	********	REPORT INST MX		********	********	********	****		WEEKLY	PMPLOC
SOLIDS, TOTAL SUSPENDED	SAMPLE MEASUREMENT	********	********	****	********	********		MG/L			
00530 1 0 EFFLUENT GROSS VALUE	PERMIT REQUIREMENT	********	********	****	********	********	50 INST MX			WEEKLY	GRAB
PH	SAMPLE MEASUREMENT	********	********	****		********		SU			
00400 1 0 EFFLUENT GROSS VALUE	PERMIT REQUIREMENT	********	********	****	6.5 MINIMUM	********	8.5 MAXIMUM			WEEKLY	GRAB
Total Recoverable Copper	SAMPLE MEASUREMENT	********	********	****	********	********		MG/L			
01119 1 0 EFFLUENT GROSS VALUE	PERMIT REQUIREMENT	********	********	****	********	********	REPORT INST MX			ONCE/ 2WEEKS	GRAB
MERCURY TOTAL RECOVERABLE	SAMPLE MEASUREMENT	********	********	****	********	********		MG/L			
71901 1 0 EFFLUENT GROSS VALUE	PERMIT REQUIREMENT	********	********	****	********	********	REPORT INST MX			ONCE/ 2WEEKS	GRAB
ARSENIC, TOTAL RECOVERABLE	SAMPLE MEASUREMENT	********	********	****	********	********		MG/L			
00978 1 0 EFFLUENT GROSS VALUE	PERMIT REQUIREMENT	********	********	****	********	********	REPORT INST MX			ONCE/ 2WEEKS	GRAB
ANTIMONY, TOTAL RECOVERABLE	SAMPLE MEASUREMENT	********	********	****	********	********		MG/L			
01268 1 0 EFFLUENT GROSS VALUE	PERMIT REQUIREMENT	********	********	****	********	********	REPORT INST MX			ONCE/ 2WEEKS	GRAB

NAME/TITLE PRINCIPAL EXECUTIVE OFFICER

TYPED OR PRINTED

I CERTIFY UNDER PENALTY OF LAW THAT I HAVE PERSONALLY EXAMINED AND AM FAMILIAR WITH THE INFORMATION SUBMITTED HEREIN; AND BASED ON MY INQUIRY OF THOSE INDIVIDUALS IMMEDIATELY RESPONSIBLE FOR OBTAINING THE INFORMATION I BELIEVE THE SUBMITTED INFORMATION IS TRUE, ACCURATE AND COMPLETE. I AM AWARE THAT THERE ARE SIGNIFICANT PENALTIES FOR SUBMITTING FALSE INFORMATION, INCLUDING THE POSSIBILITY OF FINE AND IMPRISONMENT. SEE 18 U.S.C. § 1001 AND 33 U.S.C. § 1319 (Penalties under these statutes may include fines up to $10,000 and or maximum imprisonment of between 6 months and 5 years.)

SIGNATURE OF PRINCIPAL EXECUTIVE OFFICER OR AUTHORIZED AGENT

TELEPHONE: AREA CODE, NUMBER

DATE: YEAR, MO, DAY

COMMENT AND EXPLANATION OF ANY VIOLATIONS (Reference all attachments here)

This outfall has an intermittent discharge to Outfall 001.

☆ U.S. GOVERNMENT PRINTING OFFICE 1989-241-124/07211

NAME Paul Stinson
ADDR. AES/Cedar Bay, Inc.
9469 Eastport Road
Jacksonville, FL
FACILITY AES/Cedar Bay Cogeneration Projec
LOCATION Jacksonville, FL

DISCHARGE MONITORING REPORT (DMR)

FINAL

PERMIT NUMBER (2-)	DISCHARGE NUMBER (17-19)
FL00 ,3	008 1

MONITORING PERIOD	YEAR	MO	DAY	TO	YEAR	MO	DAY
FROM							
	(20-21)	(22-23)	(24-25)		(26-27)	(28-29)	(30-31)

MINOR

NOTE: Read instructions before completing this form.

PARAMETER (32-37)		(3 Card Only) (46-53) QUANTITY OR LOADING (54-61) AVERAGE	MAXIMUM	UNITS	(4 Card Only) (38-45) QUALITY OR CONCENTRATION (46-53) MINIMUM	AVERAGE	(54-61) MAXIMUM	UNITS	NO. EX (62-63)	FREQUENCY OF ANALYSIS (64-68)	SAMPLE TYPE (69-70)
BERYLLIUM, TOTAL RECOVERABLE (AS BE) 00998 1 0 EFFLUENT GROSS VALUE	SAMPLE MEASUREMENT	********	********	****	********	********		MG/L			
	PERMIT REQUIREMENT	********	********	****	********	********	REPORT INST MX			ONCE/ 2WEEKS	GRAB
CADMIUM TOTAL RECOVERABLE 01113 1 0 EFFLUENT GROSS VALUE	SAMPLE MEASUREMENT	********	********	****	********	********		MG/L			
	PERMIT REQUIREMENT	********	********	****	********	********	REPORT INST MX			ONCE/ 2WEEKS	GRAB
LEAD TOTAL RECOVERABLE 01114 1 0 EFFLUENT GROSS VALUE	SAMPLE MEASUREMENT	********	********	****	********	********		MG/L			
	PERMIT REQUIREMENT	********	********	****	********	********	REPORT INST MX			ONCE/ 2WEEKS	GRAB
NICKEL, TOTAL (AS NI) 01067 1 0 EFFLUENT GROSS VALUE	SAMPLE MEASUREMENT	********	********	****	********	********		MG/L			
	PERMIT REQUIREMENT	********	********	****	********	********	REPORT INST MX			ONCE/ 2WEEKS	GRAB
ZINC TOTAL RECOVERABLE 01094 1 0 EFFLUENT GROSS VALUE	SAMPLE MEASUREMENT	********	********	****	********	********		MG/L			
	PERMIT REQUIREMENT	********	********	****	********	********	REPORT INST MX			ONCE/ 2WEEKS	GRAB
NAPHTHALENE 34696 1 0 EFFLUENT GROSS VALUE	SAMPLE MEASUREMENT	********	********	****	********	********		MG/L			
	PERMIT REQUIREMENT	********	********	****	********	********	REPORT INST MX			ONCE/ 2WEEKS	GRAB
TOLUENE 34010 1 0 EFFLUENT GROSS VALUE	SAMPLE MEASUREMENT	********	********	****	********	********		MG/L			
	PERMIT REQUIREMENT	********	********	****	********	********	REPORT INST MX			ONCE/ 2WEEKS	GRAB

NAME/TITLE PRINCIPAL EXECUTIVE OFFICER	I CERTIFY UNDER PENALTY OF LAW THAT I HAVE PERSONALLY EXAMINED AND AM FAMILIAR WITH THE INFORMATION SUBMITTED HEREIN, AND BASED ON MY INQUIRY OF THOSE INDIVIDUALS IMMEDIATELY RESPONSIBLE FOR OBTAINING THE INFORMATION I BELIEVE THE SUBMITTED INFORMATION IS TRUE, ACCURATE AND COMPLETE. I AM AWARE THAT THERE ARE SIGNIFICANT PENALTIES FOR SUBMITTING FALSE INFORMATION, INCLUDING THE POSSIBILITY OF FINE AND IMPRISONMENT SEE 18 U.S.C. § 1001 AND 33 U.S.C. § 1319 (Penalties under these statutes may include fines up to $10,000 and a maximum imprisonment of between 6 months and 5 years)		TELEPHONE	DATE
TYPED OR PRINTED	SIGNATURE OF PRINCIPAL EXECUTIVE OFFICER OR AUTHORIZED AGENT	AREA CODE / NUMBER	YEAR / MO / DAY

COMMENT AND EXPLANATION OF ANY VIOLATIONS (Reference all attachments here)

This outfall has an intermittent discharge to Outfall 001.

H-52

☆ U.S. GOVERNMENT PRINTING OFFICE 1989-241-124/07211

NAME Paul Stinson
ADDRESS AES/Cedar Bay, Inc.
9469 Eastport Road
Jacksonville, FL
FACILITY AES/Cedar Bay Cogeneration Projec
LOCATION Jacksonville, FL

DISCHARGE MONITORING REPORT (DMR)

PERMIT NUMBER (2-11): FL0041 /3

DISCHARGE NUMBER (17-19): 008 1

FINAL

MONITORING PERIOD

FROM YEAR (20-21)	MO (22-23)	DAY (24-25)	TO YEAR (26-27)	MO (28-29)	DAY (30-31)

MINOR

NOTE: Read instructions before completing this form.

PARAMETER (32-37)		QUANTITY OR LOADING (3 Card Only) (46-53) AVERAGE	(54-61) MAXIMUM	UNITS	QUALITY OR CONCENTRATION (4 Card Only) (38-45) MINIMUM	(46-53) AVERAGE	(54-61) MAXIMUM	UNITS	NO. EX (62-63)	FREQUENCY OF ANALYSIS (64-68)	SAMPLE TYPE (69-70)
PHENOLS	SAMPLE MEASUREMENT	********	********	****	********	********		MG/L			
46000 1 0 EFFLUENT GROSS VALUE	PERMIT REQUIREMENT	********	********	****	********	********	REPORT INST MX			ONCE/ 2WEEKS	GRAB
	SAMPLE MEASUREMENT										
	PERMIT REQUIREMENT										
	SAMPLE MEASUREMENT										
	PERMIT REQUIREMENT										
	SAMPLE MEASUREMENT										
	PERMIT REQUIREMENT										
	SAMPLE MEASUREMENT										
	PERMIT REQUIREMENT										
	SAMPLE MEASUREMENT										
	PERMIT REQUIREMENT										
	SAMPLE MEASUREMENT										
	PERMIT REQUIREMENT										

NAME/TITLE PRINCIPAL EXECUTIVE OFFICER

TYPED OR PRINTED

I CERTIFY UNDER PENALTY OF LAW THAT I HAVE PERSONALLY EXAMINED AND AM FAMILIAR WITH THE INFORMATION SUBMITTED HEREIN, AND BASED ON MY INQUIRY OF THOSE INDIVIDUALS IMMEDIATELY RESPONSIBLE FOR OBTAINING THE INFORMATION I BELIEVE THE SUBMITTED INFORMATION IS TRUE, ACCURATE AND COMPLETE. I AM AWARE THAT THERE ARE SIGNIFICANT PENALTIES FOR SUBMITTING FALSE INFORMATION, INCLUDING THE POSSIBILITY OF FINE AND IMPRISONMENT. SEE 18 U.S.C. § 1001 AND 33 U.S.C. § 1319 *(Penalties under these statutes may include fines up to $10,000 and or maximum imprisonment of between 6 months and 5 years.)*

SIGNATURE OF PRINCIPAL EXECUTIVE OFFICER OR AUTHORIZED AGENT

TELEPHONE: AREA CODE | NUMBER

DATE: YEAR | MO | DAY

COMMENT AND EXPLANATION OF ANY VIOLATIONS *(Reference all attachments here)*

This outfall has an intermittent discharge to Outfall 001.

EPA Form 3320-1 (Rev. 9-88) *Previous editions may be used.* (REPLACES EPA FORM T-40 WHICH MAY NOT BE USED.)

☆ U.S. GOVERNMENT PRINTING OFFICE 1988-241-124/07211

H-5M

PERMITTEE NAME (Facility Name): Paul Stinson
ADDRESS (Include if different): AES/Cedar Bay, Inc.
9469 Eastport Road
Jacksonville, FL 32218
FACILITY: AES/Cedar Bay Cogeneration Projec
LOCATION: Jacksonville, FL

NATIONAL POLLUTANT DISCHARGE ELIMINATION SYSTEM (NPDES) DISCHARGE MONITORING REPORT (DMR)

PERMIT NUMBER (2-16): FL0041173
DISCHARGE NUMBER (17-19): 008 2

FINAL

MONITORING PERIOD

FROM YEAR (20-21)	MO (22-23)	DAY (24-25)	TO YEAR (26-27)	MO (28-29)	DAY (30-31)

MINOR

NOTE: Read instructions before completing this form.

PARAMETER (32-37)		(3 Card Only) QUANTITY OR LOADING (46-53) AVERAGE	(54-61) MAXIMUM	UNITS	(4 Card Only) QUALITY OR CONCENTRATION (38-45) MINIMUM	(46-53) AVERAGE	(54-61) MAXIMUM	UNITS	NO. EX (62-63)	FREQUENCY OF ANALYSIS (64-68)	SAMPLE TYPE (69-70)
SOLIDS, TOTAL SUSPENDED 00530 1 0 EFFLUENT GROSS VALUE	SAMPLE MEASUREMENT	********	********	****	********	********		MG/L			
	PERMIT REQUIREMENT	********	********	****	********	********	REPORT INST MX			ONCE/ DSCHDY	GRAB
COPPER TOTAL RECOVERABLE 01119 1 0 EFFLUENT GROSS VALUE	SAMPLE MEASUREMENT	********	********	****	********	********		MG/L			
	PERMIT REQUIREMENT	********	********	****	********	********	REPORT INST MX			ONCE/ DSCHDY	GRAB
MERCURY TOTAL RECOVERABLE 71901 1 0 EFFLUENT GROSS VALUE	SAMPLE MEASUREMENT	********	********	****	********	********		MG/L			
	PERMIT REQUIREMENT	********	********	****	********	********	REPORT INST MX			ONCE/ DSCHDY	GRAB
ARSENIC, TOTAL RECOVERABLE 00978 1 0 EFFLUENT GROSS VALUE	SAMPLE MEASUREMENT	********	********	****	********	********		MG/L			
	PERMIT REQUIREMENT	********	********	****	********	********	REPORT INST MX			ONCE/ DSCHDY	GRAB
ANTIMONY, TOTAL RECOVERABLE 01268 1 0 EFFLUENT GROSS VALUE	SAMPLE MEASUREMENT	********	********	****	********	********		MG/L			
	PERMIT REQUIREMENT	********	********	****	********	********	REPORT INST MX			ONCE/ DSCHDY	GRAB
BERYLLIUM, TOTAL RECOVERABLE (AS BE) 00990 1 0 EFFLUENT GROSS VALUE	SAMPLE MEASUREMENT	********	********	****	********	********		MG/L			
	PERMIT REQUIREMENT	********	********	****	********	********	REPORT INST MX			ONCE/ DSCHDY	GRAB
CADMIUM TOTAL RECOVERABLE 01113 1 0 EFFLUENT GROSS VALUE	SAMPLE MEASUREMENT	********	********	****	********	********		MG/L			
	PERMIT REQUIREMENT	********	********	****	********	********	REPORT INST MX			ONCE/ DSCHDY	GRAB

NAME/TITLE PRINCIPAL EXECUTIVE OFFICER

TYPED OR PRINTED

I CERTIFY UNDER PENALTY OF LAW THAT I HAVE PERSONALLY EXAMINED AND AM FAMILIAR WITH THE INFORMATION SUBMITTED HEREIN, AND BASED ON MY INQUIRY OF THOSE INDIVIDUALS IMMEDIATELY RESPONSIBLE FOR OBTAINING THE INFORMATION I BELIEVE THE SUBMITTED INFORMATION IS TRUE, ACCURATE AND COMPLETE. I AM AWARE THAT THERE ARE SIGNIFICANT PENALTIES FOR SUBMITTING FALSE INFORMATION, INCLUDING THE POSSIBILITY OF FINE AND IMPRISONMENT. SEE 18 U.S.C. § 1001 AND 33 U.S.C. § 1319. (Penalties under these statutes may include fines up to $10,000 and or maximum imprisonment of between 6 months and 5 years.)

SIGNATURE OF PRINCIPAL EXECUTIVE OFFICER OR AUTHORIZED AGENT

TELEPHONE: AREA CODE / NUMBER

DATE: YEAR / MO / DAY

COMMENT AND EXPLANATION OF ANY VIOLATIONS (Reference all attachments here)

This outfall has an intermittent discharge during storms in excess of the 10Y24 rainfall event.

H5-H

☆ U.S. GOVERNMENT PRINTING OFFICE 1988-241-124/07211

Facility Name (If different)
NAME Ul Stinson
ADDRESS AES/Cedar Bay, Inc.
9469 Eastport Road
Jacksonville, FL 32218
FACILITY AES/Cedar Bay Cogeneration Projec
LOCATION Jacksonville, FL

DISCHARGE (2-16) FL0041 PERMIT NUMBER
TOPING DISCHARGE NUMBER 008 2

FINAL

MONITORING PERIOD

FROM YEAR	MO	DAY	TO YEAR	MO	DAY
(20-21)	(22-23)	(24-25)	(26-27)	(28-29)	(30-31)

MINOR

NOTE: Read instructions before completing this form.

PARAMETER (32-37)		(3 Card Only) (46-53) QUANTITY OR LOADING (54-61) AVERAGE	MAXIMUM	UNITS	(4 Card Only) (38-45) QUALITY OR CONCENTRATION (46-53) MINIMUM	(54-61) AVERAGE	MAXIMUM	UNITS	NO. EX (62-63)	FREQUENCY OF ANALYSIS (64-68)	SAMPLE TYPE (69-70)
LEAD TOTAL RECOVERABLE 01114 1 0 EFFLUENT GROSS VALUE	SAMPLE MEASUREMENT	********	********	****	********	********		MG/L			
	PERMIT REQUIREMENT	********	********	****	********	********	REPORT INST MX			ONCE/ DSCHDY	GRAB
NICKEL TOTAL RECOVERABLE 01074 1 0 EFFLUENT GROSS VALUE	SAMPLE MEASUREMENT	********	********	****	********	********		MG/L			
	PERMIT REQUIREMENT	********	********	****	********	********	REPORT INST MX			ONCE/ DSCHDY	GRAB
ZINC TOTAL RECOVERABLE 01094 1 0 EFFLUENT GROSS VALUE	SAMPLE MEASUREMENT	********	********	****	********	********		MG/L			
	PERMIT REQUIREMENT	********	********	****	********	********	REPORT INST MX			ONCE/ DSCHDY	GRAB
CHROMIUM TOTAL RECOVERABLE 01118 1 0 EFFLUENT GROSS VALUE	SAMPLE MEASUREMENT	********	********	****	********	********		MG/L			
	PERMIT REQUIREMENT	********	********	****	********	********	REPORT INST MX			ONCE/ DSCHDY	GRAB
TOLUENE 34010 1 0 EFFLUENT GROSS VALUE	SAMPLE MEASUREMENT	********	********	****	********	********		MG/L			
	PERMIT REQUIREMENT	********	********	****	********	********	REPORT INST MX			ONCE/ DSCHDY	GRAB
NAPHTHALENE 34696 1 0 EFFLUENT GROSS VALUE	SAMPLE MEASUREMENT	********	********	****	********	********		MG/L			
	PERMIT REQUIREMENT	********	********	****	********	********	REPORT INST MX			ONCE/ DSCHDY	GRAB
PHENOLS 46000 1 0 EFFLUENT GROSS VALUE	SAMPLE MEASUREMENT	********	********	****	********	********		MG/L			
	PERMIT REQUIREMENT	********	********	****	********	********	REPORT INST MX			ONCE/ DSCHDY	GRAB

NAME/TITLE PRINCIPAL EXECUTIVE OFFICER

TYPED OR PRINTED

I CERTIFY UNDER PENALTY OF LAW THAT I HAVE PERSONALLY EXAMINED AND AM FAMILIAR WITH THE INFORMATION SUBMITTED HEREIN; AND BASED ON MY INQUIRY OF THOSE INDIVIDUALS IMMEDIATELY RESPONSIBLE FOR OBTAINING THE INFORMATION, I BELIEVE THE SUBMITTED INFORMATION IS TRUE, ACCURATE AND COMPLETE. I AM AWARE THAT THERE ARE SIGNIFICANT PENALTIES FOR SUBMITTING FALSE INFORMATION, INCLUDING THE POSSIBILITY OF FINE AND IMPRISONMENT. SEE 18 U.S.C. § 1001 AND 33 U.S.C. § 1319 (Penalties under these statutes may include fines up to $10,000 and or maximum imprisonment of between 6 months and 5 years.)

SIGNATURE OF PRINCIPAL EXECUTIVE OFFICER OR AUTHORIZED AGENT

TELEPHONE: AREA CODE, NUMBER

DATE: YEAR, MO, DAY

COMMENT AND EXPLANATION OF ANY VIOLATIONS (Reference all attachments here)

This outfall has an intermittent discharge during storms in excess of the 10Y24 rainfall event.

H-55

☆ U.S. GOVERNMENT PRINTING OFFICE 1989-241-124/07211

PERMITTEE NAME/ADDRESS (Include Facility Name/Location if different)
NAME Paul Stinson
ADDRESS AES/Cedar Bay, Inc.

NATIONAL POLLUTANT DISCHARGE ELIMINATION SYSTEM (NPDES) DISCHARGE MONITORING REPORT (DMR) (2-16)
FL0041173 (17-19) 008 2

FINAL

Facility No. (Mine if different)

NAME Paul Stinson

ADDRE. AES/Cedar Bay, Inc.
9469 Eastport Road
Jacksonville, FL 32218

FACILITY AES/Cedar Bay Cogeneration Projec

LOCATION Jacksonville, FL

DISCHARGE MONITORING REPORT (DMR) (2-16)

FINAL

PERMIT NUMBER (17-19)	DISCHARGE NUMBER
FL004. 3	008 2

MONITORING PERIOD

FROM YEAR (20-21)	MO (22-23)	DAY (24-25)	TO YEAR (26-27)	MO (28-29)	DAY (30-31)

MINOR

NOTE: Read instructions before completing this form.

PARAMETER (32-37)		QUANTITY OR LOADING (3 Card Only) (46-53) AVERAGE	(54-61) MAXIMUM	UNITS	QUALITY OR CONCENTRATION (4 Card Only) (38-45) MINIMUM	(46-53) AVERAGE	(54-61) MAXIMUM	UNITS	NO. EX (62-63)	FREQUENCY OF ANALYSIS (64-68)	SAMPLE TYPE (69-70)
BOD, 5-DAY (20 DEG. C) 00310 1 0 EFFLUENT GROSS VALUE	SAMPLE MEASUREMENT	********	********	****	********	********		MG/L			
	PERMIT REQUIREMENT	********	********	****	********	********	REPORT INST MX			ONCE/ DSCHDY	GRAB
CARBON, TOT ORGANIC (TOC) 00680 1 0 EFFLUENT GROSS VALUE	SAMPLE MEASUREMENT	********	********	****	********	********		MG/L			
	PERMIT REQUIREMENT	********	********	****	********	********	REPORT INST MX			ONCE/ DSCHDY	GRAB
OXYGEN, DISSOLVED (DO) 00300 1 0 EFFLUENT GROSS VALUE	SAMPLE MEASUREMENT	********	********	****	********	********		MG/L			
	PERMIT REQUIREMENT	********	********	****	********	********	REPORT INST MX			ONCE/ DSCHDY	GRAB
NITROGEN, KJELDAHL TOTAL (AS N) 00625 1 0 EFFLUENT GROSS VALUE	SAMPLE MEASUREMENT	********	********	****	********	********		MG/L			
	PERMIT REQUIREMENT	********	********	****	********	********	REPORT INST MX			ONCE/ DSCHDY	GRAB
PHOSPHORUS, TOTAL (AS P) 00665 1 0 EFFLUENT GROSS VALUE	SAMPLE MEASUREMENT	********	********	****	********	********		MG/L			
	PERMIT REQUIREMENT	********	********	****	********	********	REPORT INST MX			ONCE/ DSCHDY	GRAB
OIL AND GREASE FREON EXT-GRAY METH 00556 1 0 EFFLUENT GROSS VALUE	SAMPLE MEASUREMENT	********	********	****	********	********		MG/L			
	PERMIT REQUIREMENT	********	********	****	********	********	REPORT INST MX			ONCE/ DSCHDY	GRAB
	SAMPLE MEASUREMENT										
	PERMIT REQUIREMENT										

NAME/TITLE PRINCIPAL EXECUTIVE OFFICER

TYPED OR PRINTED

I CERTIFY UNDER PENALTY OF LAW THAT I HAVE PERSONALLY EXAMINED AND AM FAMILIAR WITH THE INFORMATION SUBMITTED HEREIN, AND BASED ON MY INQUIRY OF THOSE INDIVIDUALS IMMEDIATELY RESPONSIBLE FOR OBTAINING THE INFORMATION I BELIEVE THE SUBMITTED INFORMATION IS TRUE, ACCURATE AND COMPLETE. I AM AWARE THAT THERE ARE SIGNIFICANT PENALTIES FOR SUBMITTING FALSE INFORMATION, INCLUDING THE POSSIBILITY OF FINE AND IMPRISONMENT. SEE 18 U.S.C. § 1001 AND 33 U.S.C. § 1319 (Penalties under these statutes may include fines up to $10,000 and/or maximum imprisonment of between 6 months and 5 years.)

SIGNATURE OF PRINCIPAL EXECUTIVE OFFICER OR AUTHORIZED AGENT

TELEPHONE: AREA CODE | NUMBER

DATE: YEAR | MO | DAY

COMMENT AND EXPLANATION OF ANY VIOLATIONS (Reference all attachments here)

This outfall has an intermittent discharge during storms in excess of the 10Y24 rainfall event.

09-H-60

☆ U.S. GOVERNMENT PRINTING OFFICE 1988-241-124/07211

UNITED STATES ENVIRONMENTAL PROTECTION AGENCY

REGION IV

345 COURTLAND STREET, N.E.
ATLANTA, GEORGIA 30365

RESPONSE TO COMMENTS
AES/CEDAR BAY COGENERATION PROJECT
NPDES Permit No. FL0041173
FEBRUARY 6 - MARCH 18, 1992

A. Mr. Stafford Campbell, The Greater Arlington Civic Council, Environmental Concerns Committee, P.O. Box 20214, Jacksonville, FL 32225, March 6, 1992.

Comment 1: EPA should not issue a separate, construction-related, storm water discharge permit at this time because the Environmental Impact Statement (EIS) is not yet completed.

EPA Response: The issuance of an National Pollutant Discharge Elimination System (NPDES) permit for storm water discharges during construction is not related to the National Environmental Policy Act (NEPA) process, nor is it contingent on the Florida Department of Environmental Regulation's (FDER) Conditions of Certification.

Comment 2.: AES commenced construction under a different, inconsistent scheme than the construction scheme contained in the Conditions of Certification of February 14, 1991.

EPA Response: The construction scheme was changed from that of the Conditions of Certification of February 14, 1991, because AES decided not to dewater (Dewatering means to pump water lower than the groundwater table in the construction area in order to allow construction activities to be conducted in a dry area). Since there is no dewatering operation being employed, there is no migration of pollutants.

Comment 3.: AES applied for a modification of the Conditions of Certification after construction had begun.

EPA Response: Comment noted. This comment is not directly related to the conditions in the draft NPDES permit for storm water discharges during construction. Direct contact with FDER is recommended.

Comment 4.: Construction continues without modifications completed to the Conditions of Certification.

EPA Response: See response A.3.

Printed on Recycled Paper

Comment 5.: Construction continues even though the Mayor of Jacksonville has requested suspension of AES/Cedar Bay's site certification.

EPA Response: See response A.1.

Comment 6.: The issuance of an NPDES permit for storm water discharges during construction, while there remains unresolved issues, may add to the instability of this situation.

EPA Response: EPA has investigated the possible impacts to the receiving stream due to the facilty's discharges and have addressed any water quality concerns in the final permit.

B. Mr. Lee Marchman, Department of Regulatory and Environmental Services, City of Jacksonville, 421 West Church, Suite 412, Jacksonville, FL 32202-4111, March 11, 1992.

Comment: Slides of the AES site are submitted for EPA review.

EPA Response: EPA has reviewed the slides and has addressed the concerns regarding the potential of contamination of the storm water discharge due to metals and phenolic compounds by including monitoring of these pollutants in the final permit. If this monitoring data indicates that water quality standards are being violated, the permit will be reopened to include limits for pollutants of concern.

C. Mr. William Cowan Val Bostwick, Jr., 1550 Hendricks Avenue, Suite 2, Jacksonville, FL 32207, March 17, 1992.

Comment 1.: The NPDES permit should not be bifurcated into a storm water discharge permit and an operating discharge permit.

EPA Response: The issuance of an operating (process water) permit is related to the NEPA process, while the issuance of a storm water permit for construction is not. Therefore, the permit was bifurcated. (It should be emphasized that these permits cover two different types of discharges. The storm water permit will be automatically become invalid upon commencement of operations.)

Comment 2.: Issuance of a storm water permit for discharges during construction is a major Federal action which will significantly affect the health and welfare of the citizens, wildlife, and the environment.

EPA Response: EPA feels the conditions in the storm water permit will protect the health and welfare of the citizens, as well as the biological community within the vicinity of the point source

discharges. The final permit contains site specific permit conditions to insure that the effluent does not have an adverse impact on the receiving waterbodies.

It should be noted that on November 13, 1991, FDER waived certification of the proposed NPDES permit under Section 401 of the Clean Water Act. The effluent limitations in the final permit are at least as stringent as those specified in the State's permit for this facility. The waiver was based on two changes that EPA has incorporated into the permit. The final permit contains additional monitoring requirements for metals and phenolic compounds, which were not contained in the draft permit, thus making it more stringent. Since several changes were made to the draft permit since the November 13, 1991 waiver, FDER reaffirmed its waiver of certification by letter dated July 22, 1992.

Comment 3.: If EPA elects to issue the construction storm water discharge permit without the benefit of an EIS, then EPA should tighten the discharge limits in the draft permit, require additional monitoring, and regulate the emergency discharge to the Broward and St. Johns Rivers.

EPA Response: Comment noted. The final permit contains monitoring requirements that were not included in the draft permit. In short, in addition to the parameters in the draft permit, the final permit requires the permittee to monitor Outfalls 003 and 008 for 12 more pollutants --- nine metals and three phenolic compounds. Also, during emergency discharge periods to the Broward River, the final permit requires that an additional 20 parameters be monitored.

Comment 4.: The site is highly contaminated with petroleum-based products. The intensity of construction activities at the site has significantly disturbed these contaminants and could, in turn, contaminate the Broward and St. Johns Rivers.

EPA Response: According to AES, the petroleum-based, contaminated soil sites were located off their property. The only contaminated soil on site was lime mud, which had previously been deposited bv the Seminole Kraft Corporation. Presently, there is contaminated groundwater on the AES site.

Concerning the lime mud, representatives from AES have stated that all the contaminated mud lime on site was removed and replaced with tons of sand. (The lime mud was moved to an alternative storage area and a zero discharge evaporation/percolation pond was constructed for this area.) Any storm water discharged from the retention ponds should not be contaminated by residual lime mud.

A representative at AES has stated that construction activities have not impacted the contaminated groundwater. The contaminated groundwater issues have been addressed in the Conditions of State Certification and in the final NPDES permit. The Conditions of State Certification requires that a groundwater monitoring program be conducted and, as stated in EPA's response to comment A.3, the

final NPDES permit requires additional monitoring to detect certain metals and phenolic compounds that may possibly be present in the discharges from the retention ponds on site. Additionally, the NPDES permit contains a provision for AES to develop and implement an Erosion and Sedimentation Control Plan. The plan requires several conditions to ensure that contaminated (and non-contaminated) soil will not cause degradation of surface waters during rainfall events. Site grading and drainage were designed and completed in accordance with all applicable Federal, State, and local regulations.

Comment 5.: Issuance of an NPDES permit for storm water discharges during construction could be misconstrued by AES, leading the company to believe that EPA will eventually approve the AES/Cedar Bay Project.

EPA Response: AES is fully aware that the issuance of a NPDES permit for storm water discharges during construction does not assure EPA approval of the project.

Comment 6.: Issuance should be held up until; (1) the EIS is complete, (2) all modification to the Conditions of Certification are finalized, (3) the Governor and Cabinet decide whether to suspend or revoke the Conditions of Certification.

EPA Response: Comment noted. See response to comment A.1.

D. Mr. Greg Radlinski, City of Jacksonville, Office of General Counsel, 600 City Hall, 220 East Bay Street, Jacksonville, FL, March 11, 1992.

Comment 1.: The City of Jacksonville disagrees with EPA's decision to issue separate NPDES permits for construction storm water runoff and process water discharges.

EPA Response: Comment noted. See response to comment C.1.

Comment 2.: The Council disagrees with EPA's conclusion that the construction storm water discharge is not a major Federal action, significantly affecting the quality of the human environment, and therefore, outside the EIS process.

EPA Response: Comment noted. See response to comment C.2.

Comment 3.: EPA should reconsider the issuance of a storm water permit without an EIS.

EPA Response: The discharge resulting from the construction activity does not require that an EIS be performed (i.e. the issuance of the storm water permit is not related to the NEPA process).

Comment 4.: If a storm water permit is issued without completion of an EIS, the City requests EPA tighten the proposed discharge limits, require additional monitoring, and regulate the emergency discharge to the Broward River.

EPA Response: Comment noted. See response to comment C.3.

Comment 5.: The soil and groundwater at the site are contaminated and storm water from the site would contaminate the Broward and St. Johns Rivers.

EPA Response: See response to comments C.3 and C.4.

Comment 6.: The Jacksonville City Council has frequently expressed its opposition to the AES/Cedar Bay Project.

EPA Response: See response to comment A.1.

E. Mr. Grady Marchman, Water Quality Division, Jacksonville Regulatory and Environmental Services Department, March 11, 1992.

Comment 1.: The AES/Cedar Bay Project is being constructed on a contaminated site and the pollutants on the site can reasonably be expected to be contained in the construction related runoff. The monitoring proposed in the draft NPDES permit is inadequate to detect the known contaminants.

EPA Response: Comment noted. See responses to comments C.3 and C.4.

Comment 2.: EPA should require all volumes of storm water transferred to the St. Johns River outfall be reported, since AES can readily report by means of their pump logs.

EPA Response: The permit requires monitoring of storm water flow rate at Outfalls 003 and 008, which are combined prior to discharge from Outfall 001, which discharges to the St. Johns River.

Comment 3.: In addition to the once per week monitoring requirements for flow and total suspended solids at Outfall 001, the following pollutants should be sampled upon any discharge of storm water from Outfalls 003 and 008 to Outfall 001:

Full Time Flow (by pump logs), Copper, Zinc, Mercury, Arsenic, Antimony, Beryllium, Cadmium, Lead, Nickel, Phenol, Naphthalene, and Toluene

EPA Response: Monitoring requirements for these pollutants have been included into the final permit.

Comment 4.: The following pollutants should be monitored at Outfall 001:

Zinc, Mercury, Arsenic, Antimony, Beryllium, Cadmium, Lead, Nickel, Phenol, Naphthalene, and Toluene

EPA Response: Through an agreement between Seminole Kraft and AES/Cedar Bay, effluent from the two retention ponds on site (Outfalls 003 & 008) will be allowed to be discharged from Outfall 001. The effluent quality from Outfall 001 is presently permitted (NPDES permit no. FL0000400) and is being monitored by Seminole Kraft Corporation, the owner of the pipe at this discharge point.

Comment 5.: There is an emergency discharge from the storm water ponds directly to the Broward River. This point has not been given a point source designation number, even though this is a channalized conveyance of storm water runoff that discharges from lands used for industrial activities. The City proposes monitoring requirements for the following list of pollutants:

Biochemical Oxygen Demand, Total Organic Carbon, Turbidity, Dissolved Oxygen, Total Kjeldahl Nitrogen, Phosphorus, Oil & Grease, Copper, Arsenic, Zinc, Mercury, Antimony, Beryllium, Cadmium, Chromium, Lead, Nickel, Phenol, Naphthalene, and Toluene

EPA Response: Comment noted. See response to comment E.3.

F. Mr. Steve Wolf, AES/Cedar Bay, March 11, 1992.

Comment 1.: The storm water discharge permit was addressed in the overall power plant siting process. AES feels that the permit and the monitoring, as certified, were appropriate and typical for storm water discharges.

EPA Response: Comment noted.

Comment 2.: Any particular monitoring of the surface water discharges, in efforts to detect a possible migration of contaminated groundwater contained in the site certification, should be addressed in the groundwater monitoring program, not in the storm water discharge permit.

EPA Response: EPA disagrees. Additional monitoring is being required in order to generate site specific data to determine if surface water quality is being impacted by groundwater intrusion into the ponds.

Comment 3.: It is hydraulically impossible for any groundwater to get to the retention ponds. The ponds are two feet higher than the groundwater table in the area.

EPA Response: Comment noted.

Comment 4.: AES has removed all the lime mud in accordance with the site certification and erosion and sediment control plans. AES has also completed construction of a storm water containment system in accordance with the site certification.

EPA Response: Comment noted.

G. Mr. Stafford Campbell, Environmental Committee of the Greater Arlington Civic Council, March 11, 1992.

Comment 1.: Issuance of a NPDES permit, even for storm water during construction, would be premature and ill-advised because it only compounds the problems already raised in AES's permitting history and subsequent performance.

EPA Response: Comment noted. See response to comment A.6.

Comment 2.: Until the EIS is completed, including the toxic risk assessment for both air and water, no permits should be issued.

EPA Response: Comment noted. Issuance of a NPDES permit for storm water discharges during construction is not related to the NEPA process.

Comment 3.: Before considering another environmental permit under the NEPA process, EPA should go back and review the earlier Prevention of Significant Deterioration (PSD) determinations. The Council has reservations about its propriety.

EPA Response: See response to comment A.3.

Comment 4.: Until modifications to the State's conditions of certification are applied for, found sufficient, and after opportunity for public review accepted, it seems unconscionable for AES to go on building under the presumption that all the charges they want, and are asking for are certain to be approved.

EPA Response: See response to comment A.3.

Comment 5.: Any permit that might be used as a justification to continue construction would be a mistake.

EPA Response: Issuance of the NPDES permit for storm water discharges during construction does not assure EPA approval of the project.

Comment 6.: Until the State's special council concludes its review of the State and City's claim of misrepresentation during the site certification proceding, and until the Governor and Cabinet decide the question of suspension or revocation, no permit that might be construed as contradictory regulatory agency approval should be issued at this time.

EPA Response: Comment noted. See response to comments A.3 and C.5.

H. Ms. Barbara Broward, Citizens Committee, Inc.

Comment 1.: AES continues to build despite the fact that the modifications to the State's Conditions of Certification have not been finalized.

EPA Response: Comment noted. See response to comment A.1.

Comment 2.: Contamination in the soil at the site tend to shift into the digging areas. This leaves holes and vacancies in the earth and possibly allowing these contaminants to get into the water or by heavy rains. Allowing discharge of any harmful contaminants into our river would be adding to an already existing problem.

EPA Response: Comment noted. See response to comment C.4.

Comment 3.: The permitting process should be halted until unresolved issues are adequately addressed.

EPA Response: See response to comment A.6.

I. Dot Mathias, Northside Civic Association, March 11, 1992.

Comment 1.: EPA should deny storm water permit.

EPA Response: We have no basis to deny a permit for storm water runoff during construction. Our permit should ensure that Class III water quality standards are met.

Comment 2.: AES is being allowed to build over a contaminated site.

EPA Response: Comment noted. See responses to comments C.3 and C.4.

Comment 3.: AES has covered the contaminated soil with tons of sand.
EPA Response: Comment noted. See response to comment C.4.

J. Andy Johnson, March 11, 1992.

Comment 1.: There are, and have been, storm water discharges from the retention ponds.

EPA Response: No documentation was submitted to substantiate this claim. EPA conducted a site investigation and found no evidence that suggested a discharge from either pond had occurred.

Comment 2.: The claim by AES that groundwater could not get into the storm water retention ponds is untrue. EPA should investigate.

EPA Response: EPA has investigated the possibility of storm water contamination by groundwater and feels that AES has taken adequate measures to prevent groundwater from migrating into the retention ponds by constructing the ponds on ground that is above the water table. Additionally, the water in the aquifer should not migrate into the ponds because the aquifer at the site is not under hydrostatic pressure. For assurance, the final permit requires additional monitoring; see response to comment C.3.

K. Richard Stockstill, Ft. George Island, March 11, 1992.

Comment 1.: If a storm water discharge permit is issued, there is enough material involving the AES project for a class action suit to be filed.

EPA Response: Comment noted.

Comment 2.: EPA should investigate the alleged contamination at the AES site by reviewing the testimony of the Florida hearing officer, which was given in February of 1990.

EPA Response: Comment noted.

L. Mr. Owen Williams, AES/Cedar Bay, Inc., March 11, 1992.

Comment: AES has removed all the lime mud from the site. Contaminated groundwater cannot get into the storm water retention ponds.

EPA Response: Comment noted.

M. Dr. Robert Haines, 3342 Environment Road, Green Cove Springs, FL, March 11, 1992.

Comment 1.: There will be prima facie evidence in the future that, unless the water risk assessment is done, there will be negligence on the part of the agency for not incorporating that in the risk assessment.

EPA Response: Comment noted.

Comment 2.: The potential of rivers becoming contaminated by heavy metals should be addressed.

EPA Response: Comment noted. See response to comment C.3.

N. Ms. Leslie Billingham, 36444 Hendricks St., March 11, 1992.

Comment: There exists on-site contamination that has not been cleaned-up and it could affect the quality of the storm water runoff.

EPA Response: Comment noted. See response to comment C.4.

O. Mr. Harry Reagan, Councilman, Office of the City Council, 220 E. Bay Street, Jacksonville, Florida 32202, March 16, 1992.

Comment 1.: The Jacksonville City Council has repeatedly expressed its opposition to this co-generation project. However, AES has been building its plant without having received all appropriate permits, including the construction storm water discharge permit.

EPA Response: EPA has no authority to prohibit construction of a facility and no point source discharge from the AES site has occurred.

Comment 2.: The Governor directed the Attorney General to appoint a special investigator to investigate AES. The City called for reopening the site certification, with the possibility of suspending certification of the project.

EPA Response: Comment noted. EPA is aware of the May 5, 1992, meeting in which FDER was directed to undertake proceedings for revocation or suspension of AES's site certification. Subsequently, FDER and AES entered into discussions concerning the allegations. As a result of these discussions, FDER issued a Siting Board Order initiating modification of the site certification. In accordance with this order, on July 7, 1991, AES filed a petition modification of certification.

Comment 3: On June 25, 1991, the City Council voted to oppose issuance of an NPDES permit to AES.

EPA Response: Comment noted.

P. C. Rufus Pennington, III, Margol and Pennington, P.A., Attorneys at Law, Suite 1702 American Heritage Tower, 76 South Laura Street, Jacksonville, FL 32202, March 15, 1992. (Member of the Citizen Committee).

Comment: The Citizens Committee incorporates by reference all the written and oral comments submitted by the legal and technical representatives of the City of Jacksonville at the March 11, 1992, hearing, as well as all of the other comments received at the hearing.

EPA Response: Comment noted.

Q. Robert G. Haines, Ph.D., President, Environmental Consulting Services, Co., P.O. Box 733, Orange Park, FL 32067-0733, March 16, 1992.

Comment 1: Pollutants are not adequately defined by the applicant.

EPA Response: The NPDES permit application form for new sources and new dischargers requires estimated discharge values for all pollutants the applicant believes will be present, or that are limited by effluent guidelines for the applicable point source category. AES's NPDES permit application, along with information contained in their application for site certification, was reviewed by EPA. The estimated values of pollutants believed to be present in the discharge were reported in the application. The values were considered to be reasonable.

Comment 2: No risk assessment has been done for pollutants in water.

EPA Response: Based on the present information pertaining to possible storm water discharges from the AES site, EPA feels a risk assessment is unnecessary.

Comment 3: City of Jacksonville engineers have developed a list of primarily heavy metals which, if allowed to contaminate the Broward and St. Johns Rivers over the next 30 years, will ultimately cause a devastating effect on the ecosystem.

EPA Response: Comment noted. See response to comment C.3.

Comment 4.: The AES plant could have been built in a much less densely populated area, particularly where the ecological effect on the waterways would have considerable less impact to the oft-used Broward River and St. Johns River.

EPA Response: Comment noted. This concern was not directly related to the proposed NPDES permit for storm water discharges during construction.

Comment 5.: AES had coal contracts, prior to making any application for a power plant. Substantive evidence shows clearly AES could have an abundance of natural gas. Would not the pollutant discharge of heavy metals be less than what is being projected if gas were used in place of coal?

EPA Response: See response to comment Q.4.

Comment 6.: How can the Agency possibly determine a rational EIS without doing an effluent discharge risk assessment?

EPA Response: See response to comments D.3.

Comment 7.: New evidence of adverse effects to mammalian tissues from ceratin heavy metals was presented at the recent Toxicology meetings.

EPA Response: Comment noted.

Comment 8.: The Agency, by allowing the NPDES permits, is establishing a posture of direct co-liability for pollution damages from heavy metals which will be in the daily effluent, according to the City of Jacksonville's evaluation of the proposed discharge into the Broward and St. Johns Rivers. Recent legal precedence of Government liability in tort in Jacksonville clearly has been set and would be used as judicial notice in any future civil action against AES and EPA. Causation would be easy to prove, since discharge of heavy metals would be simple to monitor. None would have any growth enhancement or therapeutic value, and it could not be argued that these elements would not be adverse on an accumulative bases to the river ecosystem. At least the Agency is herewith duly warned that issuing an NPDES permit without a supporting risk assessment is scientifically invalid. The Agency must bear in mind that the reason why FDER, and now the Attorney General's Office is reviewing the State Certification many months after the fact, is that false and misleading information appears to have been provided by the applicant. A granting of any permit before a proper risk evaluation could easily be construed as gross negligence on the part of the Agency.

EPA Response: The final permit has language that allows EPA to modify it in order to include an effluent limitation, or other permit conditions, if monitoring data indicates a water quality concern.

(blank)

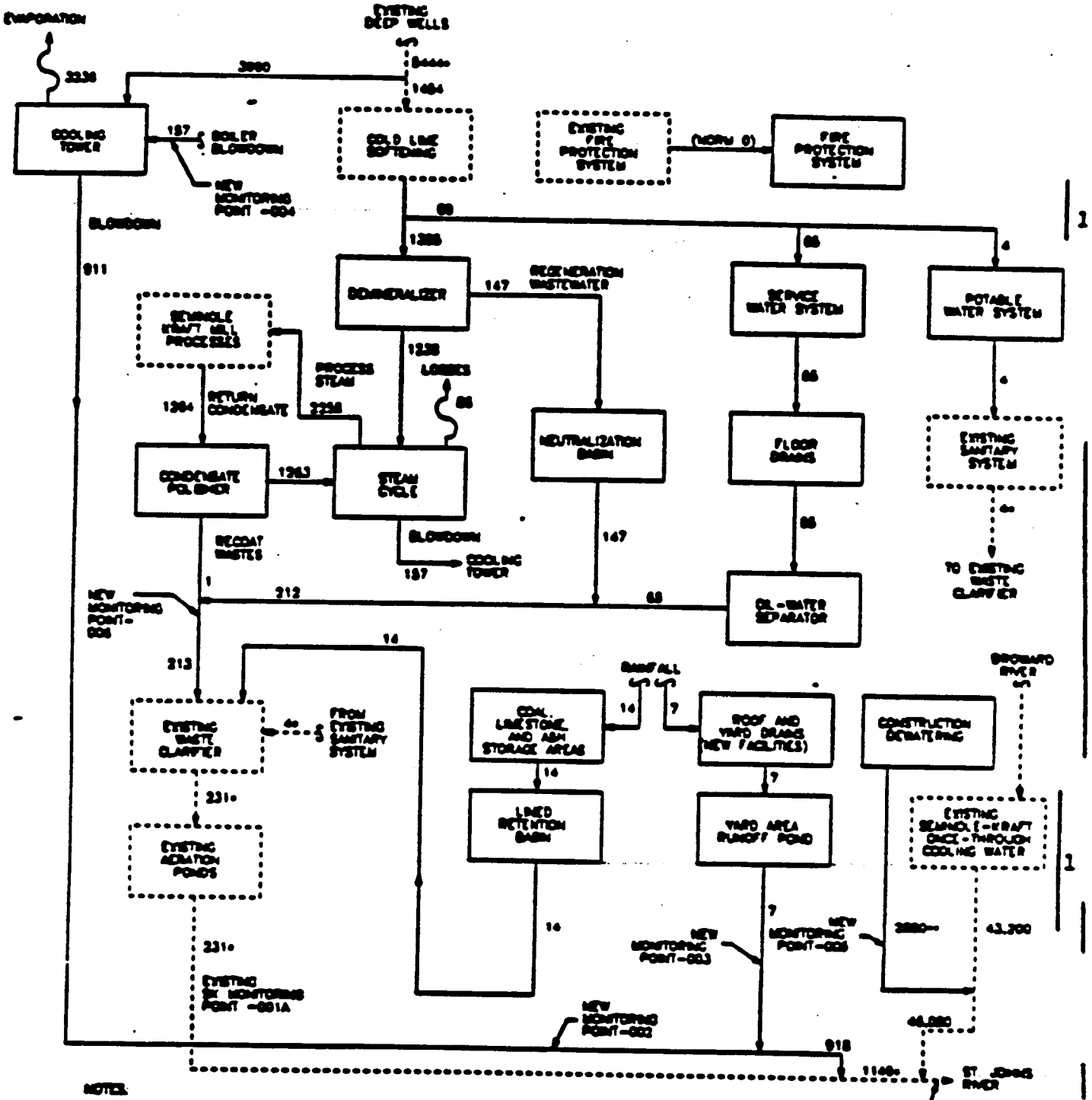

NOTES:

1. FLOWS ARE ESTIMATED ANNUAL AVERAGES EXPRESSED IN 1000 GALLONS PER DAY FOR 100 PERCENT LOAD.
2. SOLID LINES REPRESENT NEW EQUIPMENT OR PIPELINES.
3. DASHED LINES REPRESENT EXISTING EQUIPMENT OR PIPELINES.
- AMOUNT OF FLOW ATTRIBUTABLE TO CEDAR BAY COGENERATION PROJECT
= CONSTRUCTION DEWATERING. FLOW WILL OCCUR ONLY DURING CONSTRUCTION.

WATER MASS BALANCE

Amendment 1
021089
Amendment 2
070789
Amendment 5

H-75

Please type or print in the unshaded areas only

EPA ID Number (copy from Item I of Form 1)

Form Approved
OMB No. 2040-0086
Approval expires 7-31-88

Form 2D

EPA New Sources and New Dischargers Application for Permit to Discharge Process Wastewater

I. Outfall Location

For each outfall, list the latitude and longitude, and the name of the receiving water

Outfall Number (list)	Latitude Deg	Latitude Min	Latitude Sec	Longitude Deg	Longitude Min	Longitude Sec	Receiving Water (name)
001	30	24	55	81	35	45	Existing outfall in the St. Johns River
002							Monitoring point for cooling tower blowdown
003							Monitoring point for runoff retention basin
004							Monitoring point for boiler blowdown
005							Monitoring point for construction dewatering
006							Monitoring point for low volume wastes

II. Discharge Date (When do you expect to begin discharging?)

III. Flows, Sources of Pollution, and Treatment Technologies

A. For each outfall, provide a description of (1) All operations contributing wastewater to the effluent, including process wastewater, sanitary wastewater, cooling water, and stormwater runoff; (2) The average flow contributed by each operation; and (3) The treatment received by the wastewater. Continue on additional sheets if necessary.

Monitoring Point	1. Operations Contributing Flow (list)	2. Average Flow (include units)	3. Treatment (Description or List Codes from Table 2D-1)
002	Cooling tower blowdown	911,000 gpd	2-E
003	Site runoff retention basin	7,000 gpd	1-U
004	Boiler blowdown	157,000 gpd	4-C
005	Construction dewatering	2,880,000 gpd	
006	Low Volume wastes	213,000 gpd	2-K/Oil water seperation
		H-76	

CONTINUED FROM THE FRONT	EPA ID Number (copy from Item 1 of Form 1)	Outfall Number Monitoring Point 005

V Effluent Characteristics

A. and B. These items require you to report estimated amounts *(both concentration and mass)* of the pollutants to be discharged from each of your outfalls. Each part of this item addresses a different set of pollutants and should be completed in accordance with the specific instructions for that part. Data for each outfall should be on a separate page. Attach additional sheets of paper if necessary.

General Instructions *(See table 2D-2 for Pollutants)*

Each part of this item requests you to provide an estimated daily maximum and average for certain pollutants and the source of information. Data for all pollutants in Group A, for all outfalls, must be submitted unless waived by the permitting authority. For all outfalls, data for pollutants in Group B should be reported only for pollutants which you believe will be present or are limited directly by an effluent limitations guideline or NSPS or indirectly through limitations on an indicator pollutant.

1. Pollutant	2. Maximum Daily Value (include units)	3. Average Daily Value (include units)	4. Source (see instructions)
BOD5	27 mg/l 295 kg	14 mg/l 90 kg	4
COD	143 mg/l 1,560 kg	73 mg/l 464 kg	4
TOC	5 mg/l 55 kg	3 mg/l 19 kg	4
TSS	69 mg/l 753 kg	40 mg/l 254 kg	4
Ammonia	0.68 mg/l 7.4 kg	0.34 mg/l 2.2 kg	4
Temperature (Winter)	90 F	60 F	4
Temperature (Summer)	90 F	80 F	4
	12.0	8.0	4
Flow	2,880,000 gpd	1,680,000 gpd	4
Nitrate (as N)	1.8 mg/l 20 kg	0.93 mg/l 6 kg	4
Phosphorous (as P)	0.7 mg/l 7.6 kg	0.5 mg/l 5.4 kg	4
Sulfate	150 mg/l 1,636 kg	100 mg/l 635 kg	4
Iron	2.0 mg/l 21.8 kg	1.8 mg/l 19.6 kg	4
Magnesium	165 mg/l 1,800 kg	110 mg/l 700 kg	4
Aluminum	5.7 mg/l 62.1 kg	5.1 mg/l 32.4 kg	4
Chromium	<0.16 mg/l <1.74 kg	<0.13 mg/l <0.83 kg	4
Copper	<1.74 mg/l <18.9 kg	<0.94 mg/l <5.97 kg	4
Lead	<1.21 mg/l <13.2 kg	<1.0 mg/l <6.36 kg	4
Mercury	<0.0022mg/l <0.025 kg	<0.0018mg/l <0.01 kg	4
Nickel	<0.144 mg/l <1.57 kg	<0.119 mg/l <0.76 kg	4
Selenium	<0.017 mg/l <0.18 kg	<0.011 mg/l <0.07 kg	4
Zinc	<6.4 mg/l <69.7 kg	<4.4 mg/l <28.0 kg	4
Cadmium	<0.010 mg/l <0.11 kg	<0.009 mg/l <0.06 kg	4

H-77

PART IV - INDUSTRIAL WASTEWATER CHARACTERISTICS

Information furnished in this section for construction permit shall be based on reasonable prediction and good professional judgment. However, actual data shall be submitted when applying for an operation permit. Note: If there is more than one discharge point, submit the following data for each point.

A. Flow (MGD):

2.88	2.88	2.88
Average	Maximum	Design

B. Water Quality Characteristics of Effluent

PARAMETER	CONCENTRATION (note units)		
	Minimum	Maximum	30-day Average
Organic:			
volatile or purgeable			
base/neutral extractable			
acid extractables			
total organic carbon (TOC)			
biological oxygen demand (BOD)		5 mg/l	3 mg/l
Inorganic		27 mg/l	14 mg/l
heavy metals		See 10.1.1 NPDES Application	
major ions	See 10.1.1	NPDES Application	
Physical			
pH	6.0	12.0	8.0
specific conductivity			
temperature	60 F	90 F	80 F Summer 60 F Winter
suspended solids		69 mg/l	40 mg/l

CEDAR BAY COGENERATION PROJECT

SITE STORMWATER MANAGEMENT PLAN DESCRIPTION

BECHTEL CORPORATION

GAITHERSBURG, MD

MARCH, 1993

H-79

(blank)

H-80

TABLE OF CONTENTS

		Page No.
I.	INTRODUCTION	1
II.	SITE DESCRIPTION	2
III.	BASIC DATA	3
IV.	RUNOFF ANALYSIS	5
V.	STORMWATER MANAGEMENT RUNOFF ANALYSIS RESULTS	6
VI.	SURFACE WATER HYDROLOGY	8
VII.	EXTREME RAINFALL FOR THE AREA	9
VIII.	CONTAINMENT OF STORAGE AREA RUNOFF	10
IX.	ASSESSMENT OF EXTREME PRECIPITATION EVENTS	11
X.	CONCLUSIONS	12
XI.	REFERENCES	13

LIST OF TABLES

TABLE-1 STORAGE AREA RUNOFF POND (SARP) STAGE-STORAGE

TABLE-2 YARD AREA RUNOFF POND (YARP) STAGE-STORAGE

TABLE-3 SUMMARY OF RUNOFF ANALYSIS AND STORAGE AREA RUNOFF POND (SARP) WATER LEVEL DURING PLANT OPERATION

TABLE-4 SUMMARY OF RUNOFF ANALYSIS AND YARD AREA RUNOFF POND (YARP) WATER LEVEL DURING PLANT OPERATION

TABLE-5 SUMMARY OF RUNOFF ANALYSIS AND SARP WATER LEVEL DURING PLANT SHUTDOWN

TABLE-6 SUMMARY OF RUNOFF ANALYSIS AND YARP WATER LEVEL DURING PLANT SHUTDOWN

TABLE-7 SUMMARY OF St. JOHNS RIVER FLOW AT JACKSONVILLE, FLORIDA, DAILY FLOW VOLUME

TABLE-8 FLOW STATISTICS FOR St. JOHNS RIVER AT JACKSONVILLE, FLORIDA

TABLE-9 PRECIPITATION AT JACKSONVILLE, FLORIDA

LIST OF FIGURES

FIGURE-1 CEDAR BAY PROJECT LOCATION AND VICINITY MAP

FIGURE-2 SITE PLAN

CEDAR BAY COGENERATION PROJECT

SITE STORMWATER MANAGEMENT PLAN DESCRIPTION

I. INTRODUCTION

This document provides a description of the stormwater management plan for Cedar Bay Cogeneration facility site. The overall goal of the plan is to capture and retain site stormwater runoff for use as cooling tower makeup water. The information provided includes a description of the plan modifications that have been made from earlier submittals. These modifications further enhance the facility's ability to maximize water reuse and minimize potential for discharge during extreme rainfall events.

The primary differences between the proposed plan and information provided in previous submittals is the addition of an emergency water storage tank and an increase in pumping capacity from the site storage area runoff pond (SARP).

Stormwater will be pumped at an increased capacity from the SARP either directly to the zero discharge facility for treatment prior to reuse in the plant or to the emergency water storage tank.

II. SITE DESCRIPTION

The Cedar Bay plant is located on leased land adjacent to the existing Seminole Kraft (SK) recycle mill. The SK mill site is situated along the Broward River, approximately 3/4 mile upstream of its junction with the St. Johns River. The portion of the existing SK site being leased for development of the Cedar Bay Cogeneration Facility was used by SK as a storage area for lime mud and waste byproducts prior to conversion to recycling operations; it also contained a rail yard and lime settling ponds (see Figure 1).

Initial site preparation for the Cedar Bay project involved the relocation of accumulated lime mud to a storage area in the northwestern portion of SK property. Clean granular fill was placed and compacted on the cogeneration facility site subsequent to removal of the lime mud.

The site layout plan for the cogeneration plant is shown on Figure 2. The plant will burn coal in a fluidized bed boiler, and use a cooling tower for heat rejection. Coal will be delivered to the site by rail, and stored in the Coal Storage Area. Ash will be stored in silos, or pelletized and temporarily stockpiled on-site. Pelletized ash will be conveyed back to the coal mine, by rail, for ultimate disposal.

The plant has been designed as a zero discharge facility; plant wastewater (including cooling tower blowdown, coal, limestone and ash pellet storage area stormwater runoff, yard area stormwater runoff, and low volume plant wastes such as boiler blowdown, floor drains, and demineralizer regeneration wastes) will be treated and reused in the cooling tower.

Existing site runoff is directed toward the Broward River. The stormwater management plan makes use of the existing drainage pattern. As shown on Figure 2, a stormwater collection network will direct runoff from the facility area to one of two stormwater management ponds. Stormwater runoff from coal, limestone and ash pellet areas will be conveyed to the lined storage area runoff pond (SARP). Runoff from the power block will be collected in the yard area runoff pond (YARP). Water collected in both ponds will be used for plant cooling.

III. BASIC DATA

- The storm water runoff from the Cedar Bay Cogeneration Project Facility (Figure 2) is conveyed to two on-site runoff ponds. Water from these ponds is pumped to an on-site zero discharge plant and reused in the plant. The SARP is a lined pond.

- An emergency water storage tank with one million gallons (3.07 acre-ft) capacity is provided to store water pumped from SARP during plant shutdown.

- The pump at the YARP is rated at 500 gpm and its operation is based on pond water level. Pumping starts when the pond water level reaches an Elev. of 9 ft National Geodetic Vertical Datum (NGVD) and trips when the water level drops to an Elev. of 8 ft NGVD.

- The existing pump at the SARP is rated at 500 gpm and its operation is based on the pond water level. Pumping starts when pond water level reaches Elev. 9 ft NGVD and trips when water level drops to Elev. 8 ft NGVD. In order to eliminate the overflow from this pond to the river, a sensitivity study was conducted with pumping capacities of 700 gpm, 1,000 gpm and 1,200 gpm. Based on this assessment, the pumping capacity from the SARP will be increased to 1,200 gpm.

- The crest of the spillways for both ponds are at Elev. 12 ft. NGVD. The SARP and YARP volumes to spillway crest are 7.15 acre-ft and 7.57 acre-ft respectively. With bottom storage between El. 7 ft and El. 8 ft NGVD reserved for siltation, the net runoff volume which can be stored in the SARP is 5.86 acre-ft and YARP is 6.40 acre-ft. The pond stage-storage details are shown on Table-1 and Table-2. The combined net storage volume of the SARP and emergency water storage tank is 8.93 acre-ft.

- The overflow from the pond's spillway to the river is conveyed via a combined discharge chute.

- Contributory drainage areas to these ponds including pond areas are:

  - Storage Area Runoff Pond (SARP) 10.9 acres

  - Yard Area Runoff Pond (YARP) 12.6 acres

  YARP contributory area includes an area of 0.8 acres occupied by zero discharge wastewater treatment facility and excludes an area of 0.5 acres occupied by cooling tower. The runoff from the cooling tower is conveyed to cooling tower basin and does not contribute to runoff conveyed to YARP.

- SARP contributory drainage area includes a 2.4 acre coal storage area, a 0.37 acre limestone storage area, and a 0.36 acre pelletized ash storage area.

- The 24-hour duration rainfall frequencies considered for this assessment are 10-, 25- and 50- Year events.

- The rainfall data as per SJRWMD District Technical Publication SJ 88-3 (Ref. 1) are:

10-year, 24-hour	7.46 inches
25-year, 24-hour	9.34 inches
50-year, 24-hour	10.8 inches

- The weighted Soil Conservation Service (SCS) runoff curve number (CN) used for runoff analysis is 85.

- The Broward River near the site is classified as Class III marine water.

IV. RUNOFF ANALYSIS

The runoff analysis was performed based on SCS methodology, using a runoff curve number, time of concentration, and total rainfall. The runoff analysis and routing of the flow through the yard area and the storage area runoff ponds was performed using the U.S. Army Corps of Engineers HEC-1 Flood Hydrograph Package (Reference 2). The analysis incorporates pumping from the coal pile area sump to SARP.

The analysis was performed for the 10-, 25- and 50-year, 24-hour storm events. Peak water levels within the runoff ponds are determined from the HEC-1 program routing model with pumping from each runoff pond to the plant zero discharge facility. Based on the analysis, a runoff depth for each subarea was calculated and a total runoff volume to the pond was determined. This volume is compared to the total runoff pond volume along with the emergency water storage tank volume to determine if overflow from the runoff pond will occur in the event of a plant shutdown. The results of the analysis are shown in Tables 3 through 6.

V. STORMWATER MANAGEMENT RUNOFF ANALYSIS RESULTS

Plant Operation Condition

- Stormwater runoff from the SARP and YARP will be pumped to the onsite zero discharge facility and reused in the plant.

  Table-3 summarizes stormwater runoff, maximum pond water level and peak overflow rate for the SARP with various assumed pumping rates and storm frequencies. Based on this analysis, a pump at the SARP, with a capacity of 1200 gpm, will eliminate any overflow to the river for the 10 year, 25 year and 50 year, 24 hour storm event.

  Table-4 summarizes the requests of the analysis for the YARP. As indicated, there is no overflow from the YARP during the 10 year storm. During the 25 year and 50 year, 24 hour storms, the peak overflow rates are 0.3 cfs and 3cfs, respectively. The corresponding overflow volumes for the 25 and 50 year, 24 hour storms are 9105 cubic ft and 67,975 cubic ft, respectively. This overflow lasts for 5 hours during a 25 year event and 13 hours during a 50 year event.

Plant (Turbine Generator) Shutdown Condition

When the turbine generator is not in operation, stormwater cannot be utilized in the plant for cooling purposes.

Under this condition, the following observations can be made:

- No overflow will occur from either runoff pond during the 10-year, 24-hour storm event.

- During larger storm events, the water from the SARP will be pumped to the emergency water storage tank, stored and reused in the plant. This will result in no overflow from SARP to the Broward River for extreme rainfall events up to 50-year 24-hour storms. The volume pumped (Table-5) is less than the capacity of the emergency water storage tank.

H-88

- The SARP can store runoff generated by up to 8 inches of rainfall without any overflow during plant shutdown condition. Thus, with the use of the emergency water storage tank, the combined capacity of SARP and tank is equivalent to about 9.83 inches of runoff generated by 11.5 inches of rainfall. This rainfall corresponds to a 24-hour storm frequency of about 70 years. The summary of stormwater runoff and minimum runoff volume to be stored in the emergency water storage tank, during the operation of SARP pump with pond water level at spillway crest, is shown on Table-5.

- During a 25-year, 24-hour event, there will be an overflow of 64,900 cubic feet of water from the YARP to the Broward River. The peak overflow rate and overflow volume to the river from YARP is shown on Table-6.

- The YARP can store runoff generated by up to 8 inches of rainfall without any overflow during plant shutdown condition. This event has an approximate frequency of 13 years. Thus this event would occur approximately 2 times in the life of the plant.

VI. SURFACE WATER HYDROLOGY

The Cedar Bay project site (Figure 1) is located within the estuarine portion of the St. Johns River Basin, about 13 miles upstream of the mouth of the river. The surface waters in this vicinity have been classified as Class III, predominantly marine waters, in Chapter 17-3 of the Florida Administrative Code (FAC). Waters of this type are intended for fish and wildlife propagation and management. Water test data show the presence of salt water in the St. Johns River adjacent to the proposed site.

The plant site located on the Broward River (Figure-1), is less than one mile upstream of its junction with the St. Johns River. The Broward River in this reach is tidal and affected by flows and stages of the St. Johns River.

The nearest stream flow gaging station on the St. Johns River, approximately 25 miles upstream of the mouth of the river, and about 12 miles upstream of the site area, is maintained by the USGS. There are no other published records of stage and/or flow in the site vicinity. The stream flow data for the St. Johns River at Jacksonville, Florida (Station 02-2465) over the period 1954-1970, shows that the flow at this location is affected by tides. Variation in the ocean level increases or decreases stream flow for the St. John's River, by causing changes in basin storage. The published flood and ebb tide volumes in USGS Water Supply Papers (Ref. 3) at this station are summarized in Table-7.

The flow statistics for the St. Johns River at Jacksonville, based on the records computed for the March 1, 1954 to September 30, 1966 (Ref. 4) are shown on Table-8. Based on above data the minimum daily downstream flow volume for St Johns River is 540×10^6 cubic feet (Table-7). The average net flow in the river is 5,883 cfs. Maximum daily net flow in the river is 87,000 cfs (Table-8).

VII. EXTREME RAINFALL FOR THE AREA

The rainfall analysis for Northeast-Florida was performed by the St. Johns River Water Management District (Ref. 1, 5 & 6). These studies include an analysis of historic data and development of rainfall frequency curves. Based on the historic data for the Jacksonville Airport for the period of 1867-1984 (98 years), the monthly average, minimum and maximum precipitation (Ref. 6, Technical Publication SJ 86-4) is shown on Table-9. The mean monthly precipitation for the wettest month of September is 7.29 inches. The corresponding maximum monthly precipitation of 15.80 inches occurred in year 1947 in the month of September. The mean annual precipitation is 51.73 inches, with an observed minimum annual of 32.56 inches and maximum annual of 82.27 inches. The design basis rainfall values derived by SJWMD reflect these extreme rainfall events.

VIII. CONTAINMENT OF STORAGE AREA RUNOFF

The storage area runoff volumes for the 10-, 25- and 50-year 24-hour storm events which need to be contained are as follows:

FREQUENCY, YEARS	RUNOFF VOLUME, acre-ft
10-YEAR	5.17
25-YEAR	6.82
50-YEAR	8.08

With a total combined storage volume 8.93 acre-ft for the storage area runoff pond, along with the volume of the emergency water storage tank, no overflow from the SARP will occur up to the 50-year 24-hour storm event.

IX. ASSESSMENT OF EXTREME PRECIPITATION EVENTS

- The major on-site areas affecting runoff water quality are the coal storage area, limestone storage area and cured-ash-pellet storage area. The coal storage area runoff and the limestone storage area runoff are pumped to the lined SARP. The cured-ash-pellet storage area runoff flows directly to the SARP. All runoff collected is reused in the plant, or stored in the emergency water storage tank and then reused.

- The suspended solids conveyed by runoff will settle in runoff ponds.

- No overflow to the river from either pond will occur during the 10-year 24-hour storm event, with the plant in operation or shutdown.

- With a pumping capacity of 1,200 gpm along with the use of the emergency water storage tank, no overflow from the SARP to the river will occur during 25-year and 50-year 24-hour storms. This is true both for operational and shutdown conditions.

- For extreme events higher than 10-year 24-hour frequency, minor overflow from the YARP will occur. However, the overflow volume (Tables 4 and 6) is insignificant as compared to the river flow and tidal volume during these conditions. Thus, any runoff overflow from the YARP during extreme events and during plant shutdown conditions will have insignificant impact on the Broward or St. Johns Rivers.

- The peak discharge rate from the YARP to the river during plant shutdown (2 cfs during a 25-year and 4 cfs during a 50-year storm, Table-6) is insignificant compared to the St. Johns River flood flow of 87,000 cfs. With the plant in operation the peak overflow during a 50-year 24-hour storm is 3 cfs and only about 0.3 cfs during a 25-year 24-hour storm (Table-4).

X. CONCLUSIONS

The following conclusions can be drawn from the above discussed information.

- The pumping capacity from the SARP will be increased to 1,200 gpm from an existing capacity of 500 gpm.

- An emergency water storage tank with a capacity of 1 million gallons will be used to store additional water from the SARP when the plant is not operating.

- During plant operation all water from SARP will be pumped to the zero discharge facility.

- When the plant (turbine generator) is not in operation, water from the SARP will be pumped to the emergency water storage tank.

- The SARP and the emergency storage water tank can hold runoff generated by up to 11.5 inches of rainfall from a 24-hour storm, which is more than the quantity generated by a 50-year storm.

- During normal operation, the yard area runoff is stored in the YARP and used in the plant. The runoff does not overflow to the river during a 10-year storm.. Even for a 25-year and 50-year, 24-hour storms, the overflow volume from the YARP is very small. The overflow lasts for 5 hours during 25-year storm and for about 13 hours during 50-year storm.

- During extreme events when the plant is shutdown, the effect of overflow from the YARP on the St. Johns River will be insignificant due to the small volume of the overflow and the large flow in the river.

- The YARP can hold runoff generated by up to 8 inches of rainfall storm without any overflow during plant shutdown condition. Eight inches of precipitation in a 24-hour period occurs approximately once in 13 years.

H-94

XI. REFERENCES

1. St. Johns River Water Management District (SJRWMD), Technical Publication SJ 88-3, "Rainfall Analysis for Northeast Florida, Part VI: 24-Hour to 96-Hour Maximum Rainfall for Return Periods 10 Years, 25 Years, and 100 Years", May 1988.

2. U. S. Army Corps of Engineers, "HEC-1, Flood Hydrograph Package, Computer Program", September, 1990.

3. USGS Water Supply Papers "Compilation of Records of Surface Waters of the United States, Part 2-B, South Atlantic Slope and Eastern Gulf of Mexico Basins, Ogeechee River to Pearl River".

4. Anderson, W. and Goolsby, D.A., "Flow and Chemical Characteristics of The St. Johns River at Jacksonville, Florida", Florida Department of Natural Resources, Information Circular No. 82, Tallahassee, 1973.

5. St. Johns River Water Management District (SJRWMD), Technical Publication SJ 86-3, "Rainfall Analysis for Northeast Florida, Part I: 24-Hour to 10-Day Maximum Rainfall Data", June 1986.

6. St. Johns River Water Management District (SJRWMD), Technical Publication SJ 86-4, "Rainfall Analysis for Northeast Florida, Part II: Summary of Monthly and Annual Rainfall Data", July 1986.

TABLE-1 STORAGE AREA RUNOFF POND (SARP) STAGE-STORAGE*

ELEVATION, ft	AREA, acres	TOTAL VOLUME, acre-ft	NET VOLUME** ABOVE SILTATION ALLOWANCE, acre-ft
7.0	1.26	0	
8.0	1.32	1.29	0
9.0	1.40	2.66	1.37
10.0	1.46	4.08	2.79
11.0	1.53	5.58	4.29
12.0	1.60	7.15	5.86
13.0	1.70	8.80	7.51

* These volumes do not include one million gallons (3.07 acre-ft) volume of the emergency water storage tank.

** Siltation allowance from El. 7 ft to El. 8 ft.

TABLE-2 YARD AREA RUNOFF POND (YARP) STAGE-STORAGE

ELEVATION, ft	AREA, acres	TOTAL VOLUME, acre-ft	NET VOLUME* ABOVE SILTATION ALLOWANCE, acre-ft
7.0	1.10	0	
8.0	1.25	1.17	0
9.0	1.41	2.49	1.32
10.0	1.59	3.99	2.82
11.0	1.79	5.67	4.50
12.0	1.99	7.57	6.40
13.0	2.19	9.65	8.48

* Siltation allowance from El. 7 ft to El. 8 ft.

TABLE 3. SUMMARY OF RUNOFF ANALYSIS AND STORAGE AREA RUNOFF POND (SARP) WATER LEVEL DURING PLANT OPERATION

CASE A: PLANT OPERATION WITH PUMPING FROM SARP

Storm Frequency, Years	24-hour Rainfall, inches	Runoff, inches	Pond Water Level Data	
			Max. Water Level Elev. , ft NGVD	Peak Outflow, cfs
A. STORAGE AREA RUNOFF POND (SARP)				
A1. PUMPING at 500 gpm FROM POND				
10	7.46	5.69	10.84	0
25	9.34	7.51	11.82	0
50	10.8	8.9	12.2	2
A2. PUMPING at 700 gpm FROM POND				
10	7.46	5.69	10.67	0
25	9.34	7.51	11.58	0
50	10.8	8.9	12.15	1
A3. PUMPING at 1,000 gpm FROM POND				
10	7.46	5.69	10.52	0
25	9.34	7.51	11.37	0
50	10.8	8.9	12.05	0.2
A4. PUMPING at 1,200 gpm FROM POND				
10	7.46	5.69	10.43	0
25	9.34	7.51	11.27	0
50	10.8	8.9	11.94	0

TABLE 4. SUMMARY OF RUNOFF ANALYSIS AND YARD AREA RUNOFF POND (YARP) WATER LEVEL DURING PLANT OPERATION

CASE B: PLANT OPERATION WITH PUMPING FROM YARP

Storm Frequency, Years	24-hour Rainfall, inches	Runoff, inches	Pond Water Level Data		Estimated Overflow Volume, cubic feet (GALLONS)
			Max. Water Level Elev. , ft NGVD	Peak Outflow, cfs	
YARD AREA RUNOFF POND (YARP) PUMPING AT 500 gpm					
10	7.46	5.69	11.15	0	0
25	9.34	7.51	12.06	0.3	9,105 (68,100)
50	10.8	8.9	12.28	3	67,975 (508,460)

TABLE 5. SUMMARY OF RUNOFF ANALYSIS AND SARP WATER LEVEL DURING PLANT SHUTDOWN

CASE C: PLANT SHUTDOWN WITH PUMPING FROM STORAGE AREA RUNOFF POND (SARP) TO EMERGENCY WATER STORAGE TANK*

Storm Frequency, Years	24-hour Rainfall, inches	Runoff, inches	Pond Water Level Data		Minimum Volume Pumped to Emergency Storage water Tank cubic feet (GALLONS)
			Max. Water Level Elev. , ft NGVD	Peak Outflow, cfs	
STORAGE AREA RUNOFF POND (SARP).					
10	7.46	5.69	11.54	0	0
25	9.34	7.51	12.00	0	41,820 (312,820)
50	10.8	8.9	12.00	0	96,700 (723,300)

* Volume of Emergency Water Storage Tank = 1 million gallons

TABLE 6. SUMMARY OF RUNOFF ANALYSIS AND YARP WATER LEVEL DURING PLANT SHUTDOWN

CASE D: PLANT SHUTDOWN WITH NO PUMPING FROM YARD AREA RUNOFF POND

Storm Frequency, Years	24-hour Rainfall, inches	Runoff, inches	Pond Water Level Data		Overflow Volume, cubic feet (GALLONS)
			Max. Water Level Elev. , ft NGVD	Peak Outflow, cfs	
YARD AREA RUNOFF POND (YARP)					
10	7.46	5.69	11.78	0	0
25	9.34	7.51	12.22	2	64,900 (485,000)
50	10.8	8.9	12.37	4	128.500 (961,000)

TABLE 7. SUMMARY OF St. JOHNS RIVER AT JACKSONVILLE, FLORIDA, DAILY FLOW VOLUME*

YEAR	DOWNSTREAM FLOW VOLUME, CUBIC FEET		UPSTREAM FLOW VOLUME, CUBIC FEET	
	MAXIMUM	MINIMUM	MAXIMUM	MINIMUM
1954	$3,710 \times 10^6$	970×10^6	$3,250 \times 10^6$	760×10^6
1955	$4,720 \times 10^6$	$1,060 \times 10^6$	$3,060 \times 10^6$	580×10^6
1956	$3,990 \times 10^6$	$1,010 \times 10^6$	$3,350 \times 10^6$	$1,000 \times 10^6$
1957	$3,710 \times 10^6$	830×10^6	$3,480 \times 10^6$	700×10^6
1958	$3,340 \times 10^6$	890×10^6	$2,980 \times 10^6$	610×10^6
1959	$3,600 \times 10^6$	570×10^6	$2,850 \times 10^6$	400×10^6
1960	$3,340 \times 10^6$	750×10^6	$3,000 \times 10^6$	120×10^6
1961	$3,390 \times 10^6$	540×10^6	$2,910 \times 10^6$	610×10^6
1962	$3,460 \times 10^6$	810×10^6	$3,270 \times 10^6$	950×10^6
1963	$3,340 \times 10^6$	840×10^6	$3,350 \times 10^6$	150×10^6
1964	$5,280 \times 10^6$	-	$4,410 \times 10^6$	-
1965	$3,430 \times 10^6$	890×10^6	$3,320 \times 10^6$	50×10^6
1966	$3,430 \times 10^6$	740×10^6	$3,220 \times 10^6$	310×10^6
1967	$3,310 \times 10^6$	710×10^6	$3,230 \times 10^6$	640×10^6
1968	$3,670 \times 10^6$	390×10^6	$3,510 \times 10^6$	620×10^6
1969	$3,760 \times 10^6$	$1,050 \times 10^6$	$3,250 \times 10^6$	210×10^6
1970	$4,200 \times 10^6$	780×10^6	$3,140 \times 10^6$	130×10^6

* From Reference 3 for U.S.G.S. Stream Flow Gaging Station No. 02-2465, St. Johns River at Jacksonville, Florida.

TABLE 8. FLOW STATISTICS FOR St. JOHNS RIVER* AT JACKSONVILLE, FLORIDA

Statistic	Direction of Flow	
	Downstream	Upstream
Average discharge, cfs	46,419	40,536
Average net discharge, cfs	5,883	N/A
Maximum daily net flow, cfs	87,000	N/A
Minimum daily net flow, cfs	N/A	51,500
Average volume per tidal cycle, cft	$2,075.5 \times 10^6$	$1,812.4 \times 10^6$
Average net volume per tidal cycle, cft	263.1×10^6	N/A
Maximum volume per tidal cycle, cft	$5,280 \times 10^6$	$4,410 \times 10^6$

* From Reference 4.

TABLE 9. PRECIPITATION AT JACKSONVILLE, FLORIDA*

MONTH	Jacksonville Airport Precipitation, inches		
	Mean (Year 1867-1984)	Maximum (Year 1947)	Minimum (Year 1917)
January	2.82	4.51	0.41
February	3.19	4.36	1.46
March	3.42	5.11	1.81
April	2.83	4.22	0.82
May	3.89	3.01	1.83
June	6.09	9.02	3.03
July	6.64	7.61	10.36
August	6.54	4.93	6.65
September	7.29	15.80	3.47
October	4.34	13.50	0.38
November	1.95	7.12	0.23
December	2.73	3.08	2.11
Year	51.73	82.27	32.56

* From Reference 6, SJ 86-4.

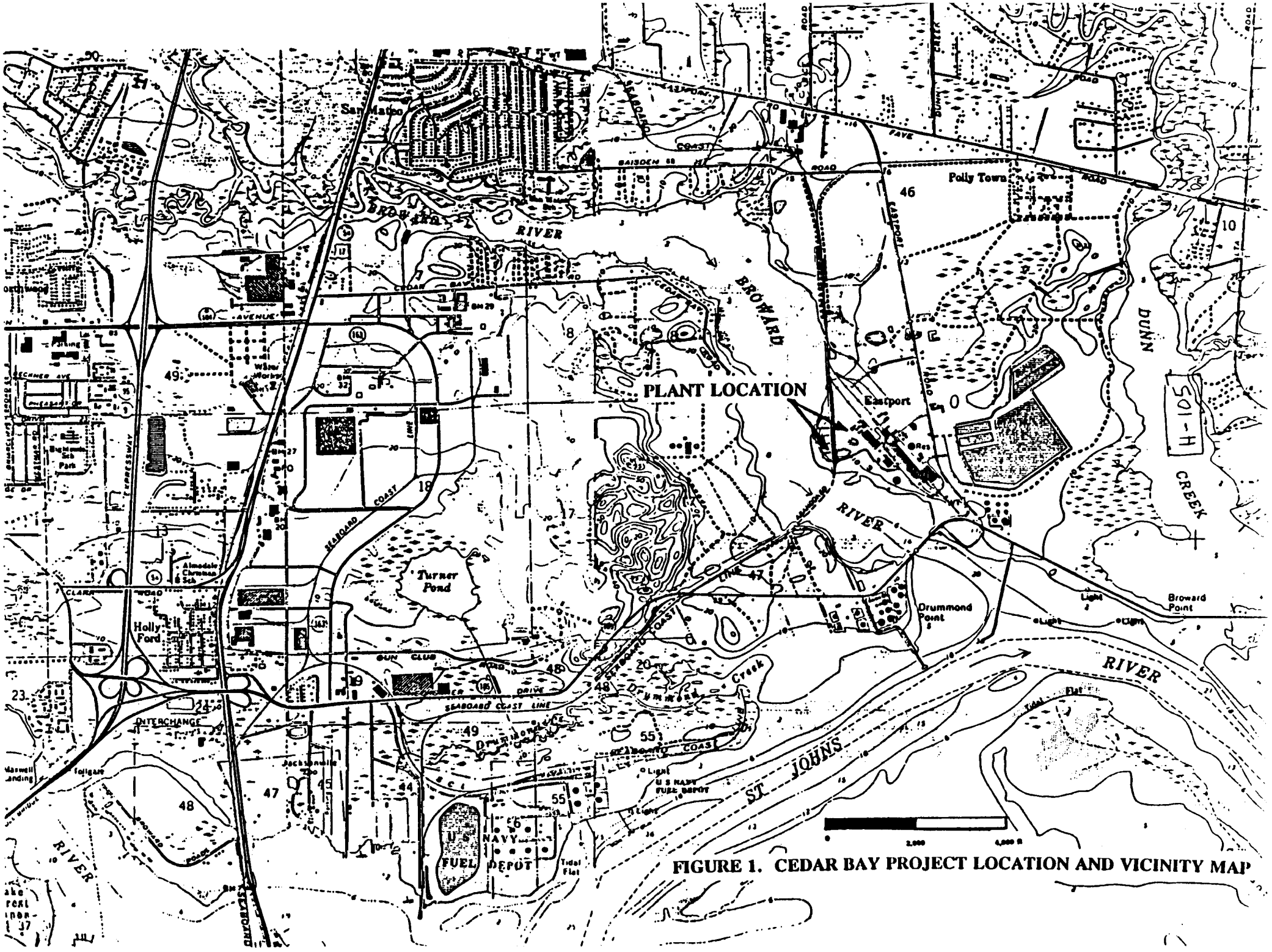

FIGURE 1. CEDAR BAY PROJECT LOCATION AND VICINITY MAP

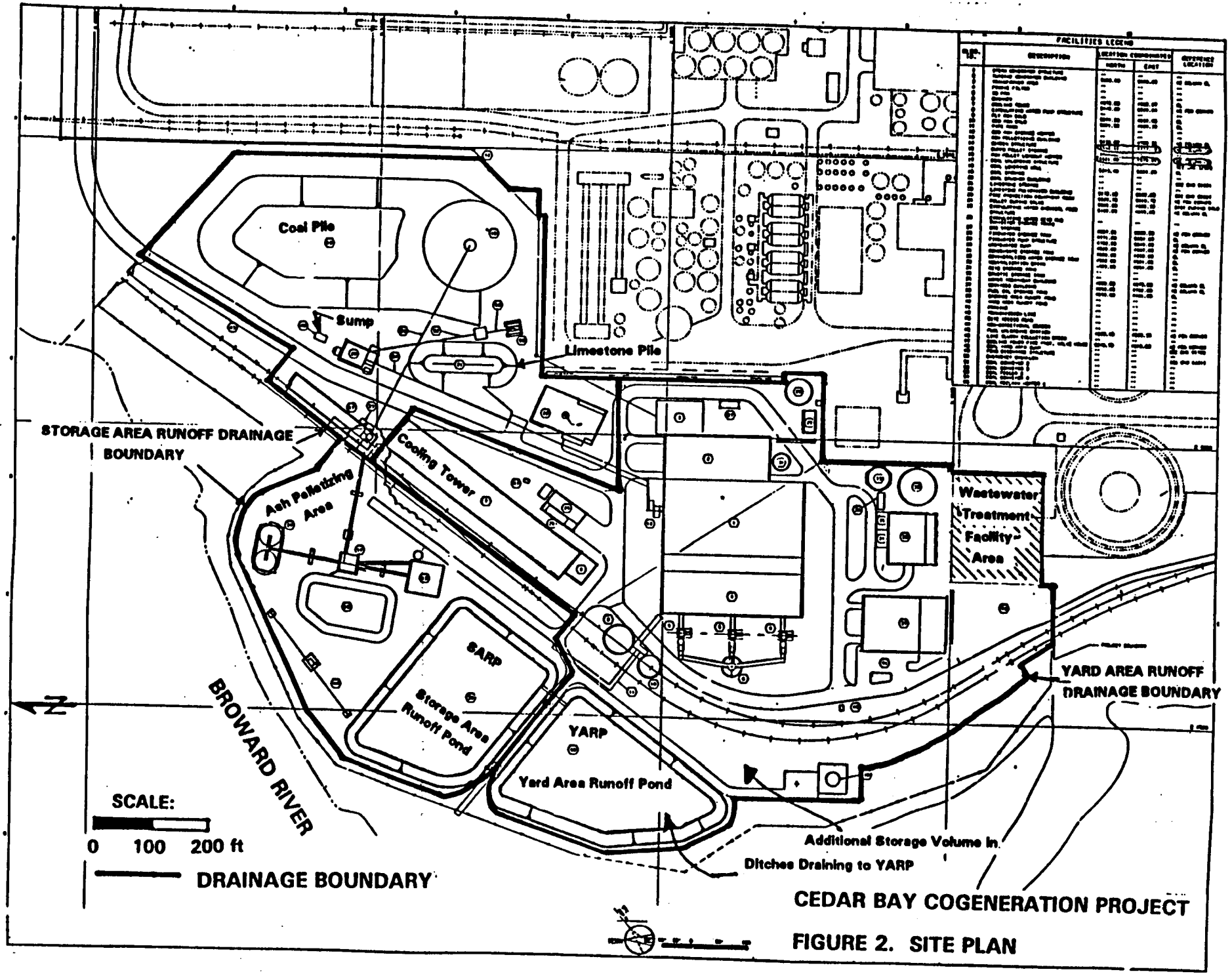
Coal Pile
Sump
Limestone Pile
STORAGE AREA RUNOFF DRAINAGE BOUNDARY
Ash Pelletizing Area
Cooling Tower
Wastewater Treatment Facility Area
SARP
Storage Area Runoff Pond
YARP
Yard Area Runoff Pond
BROWARD RIVER
N
SCALE:
0 100 200 ft
DRAINAGE BOUNDARY
YARD AREA RUNOFF DRAINAGE BOUNDARY
Additional Storage Volume in Ditches Draining to YARP
CEDAR BAY COGENERATION PROJECT
FIGURE 2. SITE PLAN

H-106

Q.1 Confirmation that there is no potential for water in ponds to infiltrate into groundwater.

RESPONSE:

The storage area runoff pond (SARP) along with the area occupied by coal pile, the ash pelletizing area and the ditches conveying the stormwater runoff to the SARP are lined with a flexible membrane liner. The presence of the liner prevents infiltration from this pond to groundwater.

The yard area runoff pond (YARP) collects runoff from the power block facilities and is not lined and will result in some infiltration to the groundwater. The water from this pond is pumped to the zero discharge facility. Thus, during plant operation the pond is maintained in an almost empty condition which minimizes the infiltration to groundwater.

Q.2 Confirmation that pumping of stormwater from unlined pond will not draw in groundwater.

RESPONSE:

The pumping from the YARP is limited to El. 8 ft. Based on the limited groundwater elevation data observed during initial soil investigations, the water level in yard area runoff pond is between El. 5 ft to El. 7 ft. By limiting the pumping from pond to El. 8 ft and above, withdrawal of groundwater during pond pumping is precluded.

Q.3 Response to FEDER concern about pH control for coal pile during potential episodic events where overflow from SARP could occur.

RESPONSE:

In order to provide pH control for the coal pile area runoff, for events greater than the 50-year 25-hour storm, the runoff collection ditches in the coal pile area will be provided with about a 3 inch thick limestone layer.

Q.4 Priority use status of stormwater vs. SKC wastewater for Cedar Bay cooling.

RESPONSE:

The logic of the system will be set up in such a way that stormwater takes priority over all other available sources. The water sources in decreasing order of preference are:

- Stormwater Runoff
- Plant Waste Water
- SK Effluent

During the period when stormwater from the ponds is available, the use of SKC wastewater will be reduced to accommodate the use of stormwater from the ponds.

APPENDIX I

CEDAR BAY ZERO DISCHARGE SYSTEM SUMMARY DESCRIPTION

TABLE OF CONTENTS

TAB

INTRODUCTION 1

SUMMARY DESCRIPTION 2

SYSTEM DESIGN CRITERIA 3

WATER BALANCE 4

WASTE STREAM DATA 5

SYSTEM DESCRIPTIONS AND FLOW DIAGRAMS 6

- Cooling Tower Makeup Pretreatment System
- Cooling Tower Blowdown Treatment System
- Reverse Osmosis System
- Evaporator/Concentrator System
- Crystallizer and Centrifuge System

PLANT LAYOUT 7

PIPING AND INSTRUMENT DIAGRAMS (P&IDS) 8

- Cooling Tower Makeup Pretreatment–System M74–LG01
- Cooling Tower Blowdown Treatment and Preconcentrator System M74–LG02
- Evaporator/Concentrator System M74–LG03
- Crystallizer and Centrifuge System M74–LG04

SPECIFICATIONS 9

- Cooling Tower Makeup Pretreatment–System M110
- Cooling Tower Blowdown Treatment–System
- Preconcentrator System (Pressure Filler and Reverse Osmosis System) M126
- Evaporator, Crystallizer and Centrifuge System M125
- Attachments to Technical Specifications

VENDOR PROPOSALS **10**

- Infilco Degremont, Inc.
  (Blowdown and Pretreatment Systems)
- Resources Conservation Company (Evaporator/Crystallizer)
- Glegg Water Conditioning, Inc. (RO System)

OTHER INFORMATION **11**

INTRODUCTION

The Cedar Bay Cogeneration Plant is a coal fueled facility located on an existing Seminole Kraft (SK) Paper Mill site in Jacksonville, Florida.

The project will be designed to provide up to 380,000 pounds per hour of process steam to the SK plant and 250 MW (net) of electricity which will be wheeled through the Jacksonville Electric Authority System for exclusive sale to Florida Power and Light Company.

The layout of the plant facilities is shown in Tab 7. The plant will burn coal in a fluidized bed boiler and will use a cooling tower for heat rejection. Coal will be delivered to the site by rail and limestone by truck. Ash generated will be stored in ash silos or pelletized and temporarily stockpiled on-site prior to being conveyed to the mine source by rail for disposal.

The plant has been designed as a zero discharge facility, and plant wastewater, including cooling tower blowdown, coal, limestone, and ash pellet storage area runoff, yard area runoff, and low volume plant wastes (boiler blowdown, floor drains, and demineralizer regeneration wastes) will be treated and reused in the plant.

Seminole Kraft waste water is used for makeup to the plant's cooling tower.

CEDAR BAY ZERO DISCHARGE SYSTEM
SUMMARY DESCRIPTION

General

Wastewater generated in the Cedar Bay plant from floor drains, makeup demineralizer regeneration, material storage area storm water runoff and from operation of the wastewater treatment system plus Seminole Kraft Company (SK) wastewater will be treated in pretreatment system for use in the Cedar Bay and SK cooling towers. The treatment method will be lime soda softening.

Cedar Bay boiler blowdown will be reused as cooling tower makeup without treatment.

Blowdown from the Cedar Bay cooling tower and general site stormwater runoff will be treated in the zero discharge system and reused as cooling tower makeup. The treatment method will be lime soda softening, filtration, reverse osmosis (RO), evaporation and crystallization.

Dewatered sludge from the pretreatment and the cooling tower blowdown clarifiers and crystallizer salt will be disposed of offsite.

There will be no process wastewater discharge from the Cedar Bay plant.

Cooling Tower Makeup Treatment

The cooling tower makeup treatment system will process the Cedar Bay plant wastewater and SK treated process wastewater to allow the cooling tower to be operated at reasonable cycles of concentration without excessive heat transfer surface fouling. The cooling tower makeup treatment system will take the available Cedar Bay plant wastewater and use SK wastewater to supplement the cooling tower makeup requirement.

Wastewater will be received in a premix tank to allow the addition of chemicals to condition the wastewater before clarification. Water from the premix tank will flow to the clarifier for suspended solids removal. Chemicals can also be added to the clarifier if required. Clarified wastewater will flow to a clearwell before being pumped to the cooling towers. The pH of the treated wastewater will be adjusted if required.

The chemicals that will be used in treatment include sulfuric acid for pH adjustment, lime and soda ash for softening, aluminum or iron salts for coagulation, and polymers as coagulant aids.

Sludge from the clarifier will be thickened and dewatered for offsite disposal.

Zero Discharge Wastewater Treatment

The zero discharge treatment system will process the Cedar Bay cooling tower blowdown for reuse as cooling tower makeup. The primary function of the system will be the removal of the salts that build up in the cooling water due to evaporation.

Cooling tower blowdown will be treated in a clarifier operated as a softener to pretreat blowdown for use as RO feed water. Lime, soda ash, sodium hydroxide and magnesium chloride will be added to the softener as required to reduce the calcium and silica concentrations to acceptable levels. The softened cooling tower blowdown will be pH adjusted with sulfuric acid, and filtered to prevent suspended solids fouling of the RO system. Sludge from the clarifier will be thickened, dewatered and disposed of in a landfill.

The filter effluent will be chemically conditioned with sulfuric acid and a scale inhibitor chemical such as polymers or sodium hexametaphosphate to reduce the potential for RO membrane fouling. The RO unit removes salt from the blowdown and produces a product stream low in total dissolved solids (TDS), and a brine stream, high in TDS. The RO product stream is returned to the cooling tower for reuse. The RO brine is pH adjusted and treated in the evaporator to produce a low TDS condensate stream and a very high TDS brine stream.

Additional evaporator chemical feeds such as antifoam agents, and sodium hydroxide will be used if required.

The evaporator condensate is returned to the cooling tower for reuse, and the evaporator brine is treated in the crystallizer. The crystallizer produces a low TDS product and solid salt crystals. The crystallizer product is returned to the cooling tower for reuse. The solid salt from the crystallizer is disposed of offsite. Additional crystallizer and evaporator chemical feeds such antifoaming agents, and sodium hydroxide will be used if required.

DESIGN CRITERIA

This section contains the principal criteria for the detail design of the Facility. The design elements (e.g., size, layout, ratings, quantities, materials of construction, equipment types) described are approximate. Changes may occur as detailed design progresses.

CODES AND STANDARDS

Systems and equipment will be designed in accordance with the applicable sections of the codes, standards, and regulations in effect at the date of construction. Applicable sections of codes, standards, and regulations will be defined in specifications.

COOLING TOWER MAKEUP WATER

The normal cooling tower makeup water supply will be from Seminole Kraft. The basis for systems design considers that water quality shall be as delineated in the following table:

Characteristic	Unit	Quality
pH		6–9
Alkalinity	mg/l	565
Sulfate	mg/l	805
Chloride	mg/l	312
Solids, Dissolved	mg/l	2300
Silica	mg/l	55
Calcium	mg/l	560
Magnesium	mg/l	260
Sodium	mg/l	850
Potassium	mg/l	15
Iron	mg/l	1.1
Manganese	mg/l	0.7

DESIGN DATA SUMMARY:

Cooling tower evaporation rate (summer):	2,288 gpm
Cooling tower drift rate:	3 gpm
Seminole Kraft (SK) cooling tower makeup rate:	500 gpm
Maximum SK wastewater dissolved solids:	2,300 mg/l
Maximum cooling water dissolved solids:	12,500 mg/l
Maximum flow from storage area runoff:	1200 gpm
Maximum flow from general site runoff:	500 gpm
Cooling tower blowdown temperature range:	64 – 95 °F
Design Average Blowdown Flow (summer):	530 gpm

EQUIPMENT SIZING BASIS:

Cooling Tower Makeup Pretreatment Clarifier:

The cooling tower makeup pretreatment clarifier will be sized for a maximum flow rate of 7 MGD to allow treatment of 50% of the Phase II (open discharge concept) flow.

Cooling Tower Blowdown Waste Clarifier/Sand Filter:

The cooling tower blowdown waste clarifier and sand filter will be sized to treat approximately 175% of the average cooling tower blowdown flow.

Reverse Osmosis System:

The reverse osmosis (RO) system will be sized to treat the design summer blowdown flow at 65 °F and approximately 125% of the design summer blowdown flow at 80 °F.

Evaporator/Crystallizer System:

The evaporator/crystallizer system will be sized to process approximately 50% of the design average summer cooling tower blowdown flow with an outage allowance of 2 days per month.

Emergency Wastewater Storage Tank:

The emergency wastewater storage tank will be sized to hold approximately 3 days of RO bring production based on the design summer cooling tower blowdown flow and a 60% RO product recovery rate.

MECHANICAL SYSTEMS AND EQUIPMENT

GENERAL

This section provides a description of the design criteria for principal mechanical equipment and systems.

PUMPS

The head/capacity characteristics of pumps will be such that the head continuously rises with decreasing capacity until a maximum head is reached at zero flow. The minimum rise to shutoff will be specified to be at least 120 percent of design head.

Pumps will be specified to be sized to accept an impeller at least 1/8-inch larger in diameter than the supplied impeller without having to change the pump casing. Permanent or startup strainers will be installed in the suction piping of pumps which operate with close clearances.

Pumps over 25 hp and with variable flow requirements will contain a recirculation line for pump protection. The recirculation line will normally be routed to the source from which the system is taking suction.

Pressure Vessels

Pressure vessels will be fabricated in accordance with ASME Section VIII, Division 1, Pressure Vessels.

Pressure vessels will be supplied with the following features:

a. Process, vent, and drain connections for startup and maintenance

b. A minimum of one manhole and one air ventilation opening on vessels where maintenance or cleaning access is required

c. Relief valves in accordance with applicable codes

Heat Exchangers

Heat exchangers will be either shell and tube type or plate type. Shell and tube type will be designed with provisions for either tube bundle replacement or individual tube replacement in place. Heat exchangers using raw water will be designed with straight tubes having a minimum diameter of 3/4 inch to allow manual tube cleaning in place. Thermal relief valves will be provided between isolation valves for the water side of the heat exchangers.

Tanks

Plant tanks will have storage capacities as required by the design of the systems. Tank volumes will be equivalent to the stated volume.

a. Material and Corrosion Allowances

Tanks will be fabricated in accordance with guidelines established by API or AWWA, as determined by the service.

b. Overflow and Vent Connections

Overflow connections and lines will be provided where required and will be at least one pipe size larger than the largest input line or combination of inputs that can discharge simultaneously.

c. Maintenance Drain Connections

Maintenance drain connections will be provided of an adequate size to facilitate drainage of tanks within a reasonable time.

d. Manholes and Ladders

Manholes, where provided, on tanks and pressure vessels will be 18 inches, except where impractical. Ladders and cleanout doors will be provided on large tanks.

Piping and Valves

Plant piping design and fabrication shall be governed by the ANSI B31.1 Power Piping Code and local plumbing codes. System frictional pressure drops, pipe sizing, and flow balancing, including the determination of necessary throttling, will be determined by using Crane Technical Paper 410, Cameron Hydraulic Data Book, and Contractor Mechanical Engineering Standards.

As a general guideline, piping 2-1/2-inch in diameter and larger will be butt-welded, and piping less than 2-1/2-inch will be socket welded. Threaded connections may be used for certain low pressure small pipe applications. Nonpressure buried or embedded drain lines may have bell and spigot joints.

Pipe stress analyses will be performed on 2-1/2-inch and larger piping operating at or greater than 400 °F. Pipe hangers will be designed for these systems to maintain stresses and equipment nozzle loads within allowable limits.

Where practical, piping 2-1/2-inches in diameter and larger will have supports arranged so that any length of pipe or a valve may be removed without any additional supports being required. Supports will be positioned near valves and joints that may have to be broken during maintenance.

Where pipe runs pass through floors or walls, either individually or collectively, floor or wall collars or other curbing will be provided.

Piping systems will be designed with high point vents and low point drains (system "hot" condition).

Steam piping will be sloped in the direction of steam flow, with a minimum slope of 1/8 inch per foot. Condensate collection in piping systems will be avoided by installing manual or automatic drain devices.

Steam lines fitted with restricting devices, such as orifices in the process runs, will be provided with drainage upstream of the device such that water does not collect in lines.

Drains with restricting orifices or steam traps with startup and blowdown drains will be installed in low points of steam lines where condensate can collect during operation.

Drain lines will be sloped at 1/4 inch per foot.

Means will be provided to fill and clean loop seals.

A bypass line around control valves will be provided for services that are essential for operation. The bypass will be omitted if services have redundant systems in parallel, if manual operation would be extremely difficult, or if plant or equipment safety could be jeopardized by manual operation.

Instrumentation connections (pressure taps, temperature taps) will be provided for mechanical systems. The following components will be fitted with pressure and temperature taps:

a. Pump suctions and discharges

b. Heat exchanger inlets and outlets

Pressure taps will be supplied with root valves and temperature taps will be supplied with thermowells.

Instruments will be provided with air block valves and ganged pneumatic instruments will have a single air supply.

Valve selection will be based on the system conditions (flow, pressure, and temperature); application (shutoff, nonreturn, or throttling); and process fluid (water, steam, air, gas, chemical, or solids).

Insulation

Thermal insulation will be installed on equipment and piping to reduce system heat loss, to provide personnel protection, and to prevent condensation. The insulation will also function as part of heat traced freeze protection systems.

Insulation materials will be free of asbestos and will meet the fire and smoke rating requirements of NFPA.

Insulation thickness will be designed to limit the calculated heat loss to 65 to 80 Btu/ft^2–hr and, for hot surfaces in the vicinity of personnel, to limit outside lagging surface temperature to a maximum of 140 °F, based on 100 °F ambient temperature and 2–feet–per–second air velocity. Insulation materials will be calcium silicate and mineral fiber, with aluminum jackets. Antisweat insulation will be furnished with a moisture–proof barrier. A fluid temperature of less than 50 °F will be the basis for using antisweat insulation. Insulation located outside of buildings and structures will be weatherproofed.

ELECTRICAL SYSTEMS AND EQUIPMENT

GENERAL

The integrated electrical system and interconnection to the main plant are shown on the 480 V Switchgear Single-Line Diagram, Drawing No. E73-NG01.

4 KV AND 480 V SYSTEM AND EQUIPMENT

The 480 V switchgear transformers and the compressor motors will be supplied from the main plant 4.16 kV switchgear.

The transformers will be outdoor, cast coil type 3-phase, 60 Hz, AA/FA cooled, delta-connected, primary/solidly grounded wye connected secondary.

Motors below 250 hp fed from MCCs will be controlled by breaker-protected combination starters. Start and stop controls for MCC fed motors will be through the PLC with local pushbutton control at the MCC starter.

MCCs located in the building will have NEMA 12 (or equivalent) enclosures. Where local contactors or outdoor MCCs will be employed, NEMA 4 and 3R enclosures will be provided.

MOTORS

Motors will be the squirrel-cage-induction type designed for full voltage starting.

In general motors 250 hp through 2,500 hp will be rated 4 kV for use on a 4.16 kV, 3-phase, 60 Hz, resistance-grounded system. Motors 3/4 hp through 200 hp, selected 250 and 300 hp motors, and reversing fractional motors will be rated

460 V, 3–phase, 60 Hz for use on a 480 V solidly grounded system. Single–phase motors smaller than 3/4 hp will be rated 115 V, single–phase, 60 Hz for use on a nominal 120 V solidly grounded system.

Motors will be rated for continuous operation at full load and Class B temperature rise. Motors will be provided with a service factor in accordance with NEMA MG1–12.47. Motor horsepower ratings will be selected without taking credit for any service factor above 1.0 under any continuous operating condition.

Motors will be capable of starting and accelerating the load to full speed with 80–percent rated motor voltage at the motor terminals. In general, locked rotor kVA/hp will be NEMA Code G or less for motors rated for continuous duty.

Totally enclosed fan–cooled motors will be provided in high–dust environments. Weather–proofed NEMA Type II enclosures will be provided for all outdoor medium voltage motors. Motors located outdoors and rated 50 hp or larger will be furnished with space heaters that are automatically energized when the motor is idle. Motors installed in hazardous areas will meet the requirements of the NEC.

GROUNDING

Grounding will conform with the requirements of the NEC.

Motors rated 460 V and higher will be provided with a supplementary ground connected to the ground grid. Skid–mounted motors will be considered grounded if the frame of the skid is grounded. Motors mounted on or attached directly to building steel will be considered adequately grounded. Motor–operated valves will be considered grounded by the piping system. In general, freestanding enclosures containing electrical equipment will be supplied with a ground bus which will be connected to the ground grid. Wall–mounted enclosures containing electrical

equipment will be furnished with a grounding lug. Local control stations and instruments will be grounded through the raceway system. Enclosures attached to structural steel will be considered adequately grounded. Skid-mounted enclosures will be considered adequately grounded through the framework of the skid which will be connected to the ground grid or grounded structural steel.

HEAT TRACING

Electrical heat tracing will be provided for caustic piping. Electrical heat tracing will be the self-regulating type, wherever possible, and will be provided with necessary power distribution equipment. Indicating lights will be provided for each circuit to indicate power is available.

CONTROL SYSTEMS AND EQUIPMENT

GENERAL

Control and instrumentation for the Facility will permit normal operation by operators in the control room and will provide local controls in discrete areas as required.

Control subsystems, including programmable logic controllers (PLC) (and man machine interfaces), will be provided for overall control of the zero discharge system.

CENTRAL CONTROL ROOM

A central control room will house the PLC-based control stations, man-machine interfaces, alarm and graphic printers.

An electrical equipment room will contain the I/O cabinets for the PLCs and an UPS system.

The control will be by a microprocessor-based PLC system and includes hardware, software, and associated peripheral equipment to monitor, control, display, alarm, record, log, and trend process facility inputs.

The graphic displays will be designed to present the process data and status of the subsystems in a manner to effectively support ergonomic responses. Alarms will be prioritized statically and dynamically. Following an alarm, the operator can silence the horn, acknowledge the alarm, and direct the screen and control cursor to the appropriate display to ascertain the use of the alarm and take corrective action.

The displays will be developed to provide a cohesive view of the facility processes. Overview displays will be developed to present overall process parameters. More limited view graphics will be provided for operating and startup examination of subprocesses.

Printers will be provided for data logging and reporting functions.

A port for communicating with the main plant DCS will be provided. The capability to transmit data will be available.

MAN-MACHINE INTERFACES

The man-machine interfaces will be provided for control and display purposes. The software used will have the capabilities for trending, data acquisition, and storage as required. Touch screens will enable the operator to view graphics, log and respond to alarms, and control the subprocesses. Alarm and graphic printers

will enable the operator to obtain hard copies of alarm summaries, historical data, and graphics.

ALARM MONITORING

The operator will be alerted to abnormal conditions by alarms through the MMI stations and by alarm printer(s). The MMI stations will access all the information transmitted on the PLC highway. Alarms will display on the MMI CRTs in order of priority.

CIVIL/STRUCTURAL/ARCHITECTURAL FEATURES

GENERAL

This section describes the general criteria and layout, the design of structure and equipment supports, and associated architectural features of the Facility's buildings.

STRUCTURAL DESIGN CRITERIA

Dead Loads

The dead loads include the weight of framing, roofs, floors, walls, partitions, platforms, and all permanent equipment and materials. The vertical and lateral pressure of liquids will also be treated as dead loads.

Live Loads

Approved floor load capacity signs will be posted for all roofs, platforms, or floors except slab on ground in accordance with the Occupational Safety and Health

Standards, Subpart D, Walking and Working Surfaces. Design live loads will be shown on the respective design drawings.

The uniform design live loads will be:

Roofs	30 psf
Offices	75 psf
Assembly and locker rooms	100 psf
Stairs, platforms, and walkways	100 psf
Ground floors – General areas	250 psf
Surcharge adjacent to plant structure	250 psf (truck) 650 psf (railroad)
Truck support structure	AASHTO HS20 loading
Grating or checkered plate platforms	150 psf
Concrete platforms	250 psf

An additional 3 kips concentrated load will be applied on all floor beams to maximize moment or shear. This load is not cumulative to columns and it is not applied on stairs and landings.

Elevated concrete slabs will be designed to support the prescribed live load or a concentrated load of 3 kips, whichever produces the greater stress. The concentrated load will be treated as a uniformly distributed load over an area of 2.5 square feet, located to produce the maximum stress conditions in the slab.

Design Basis

All steel structures will be designed by the working stress method. Soil bearing pressure will be checked for the actual loads. Reinforced concrete will be designed using the ultimate strength method.

A minimum factor of safety will be provided for all earth retaining structures as shown below:

Overturning	1.50
Sliding	1.25
Buoyancy	1.15

Design characteristics assumed for the various materials are in accordance with Standard Building Code from the Southern Building Code Congress International, AISC, ACI, and local codes.

CONSTRUCTION MATERIALS AND ALLOWABLE STRESSES

Concrete and Grout

Concrete and grout design compressive strengths as measured at 28 days will be:

Use	f'c (psi)
Structural concrete for spread footings, mats, and slabs on grade	3,000
Structural concrete for elevated slabs, columns, walls, and elevated tanks	4,000

Electrical duct encasement or lean concrete backfill	2,000
Nonshrink grout	4,000

Reinforcing Steel

Reinforcing steel bars will be deformed, billet steel, conforming to ASTM A 615, Grade 60. Welded wire mesh (WWM) will conform to ASTM A 185.

Structural Steel

- Structural steel shapes and plate will conform to ASTM A 36.
- Structural pipe members will conform to ASTM A 53, types E or S, Grade B or ASTM A 501.
- Allowable stresses in structural steel will be determined in accordance with AISC Code.

ARCHITECTURAL CRITERIA

Layout

Access aisles and clearances will be provided for operation, maintenance, and equipment removal (i.e., heater tube pulling space, pump motor removal space). Provisions will also be made for personnel walkways to equipment (for routine maintenance only), doors, stairs, and other access points.

Siding

Exterior siding for the new building will be factory assembled pre–insulated steel wall panels or a field erected system.

Wall insulation will be selected to meet the U–value required by the Energy Conservation Codes, where applicable.

Roofing

Roofing will be designed to withstand specified wind loading including calculated uplift. Roofing will be pitched not less than 1/8 inch per foot and will drain to the roof drain system. Roof parapet will be avoided unless required by local code or authorities.

Thickness of the roof insulation will be selected to meet the U–values required by the Energy Conservation Codes, where applicable.

The roofing will be a single–ply membrane roofing system, mechanically attached over mechanically fastened rigid polyiso–cyanurate board insulation, on a standing seam roof with insulation as required.

Painting

In general, all exterior and interior surfaces, except surfaces of items and equipment furnished in manufacturer's finish or finish coat, stainless steel, galvanized, aluminum, or nonferrous, will be painted, including:

- All concrete excluding floors and concrete unit masonry) in occupied areas in an acrylic latex system.

- Surface of exterior ferrous will receive an exterior prime and enamel coating system.

- Surface of interior ferrous and galvanized metals will receive an alkyd semi–gloss enamel coating system.

- Exposed ferrous surfaces of shop coated mechanical and electrical equipment and uninsulated piping will receive alkyd gloss enamel coating system.

- All gypsum board, not receiving vinyl wall covering, will be painted in a flat acrylic latex coating system. Surface preparation of all ferrous metal surfaces will be in accordance with the applicable requirements of the Steel Structures Painting Council specifications; surface preparation for all other surfaces will be in accordance with the paint or coating manufacturer's recommendations.

- As a standard of quality, paints and coatings will be those manufactured by Carboline, DuPont, Glidden, PPG Industries, Pratt and Lambert, Sherwin–Williams, Tnemec Inc., Porter Paint Co., and Con–Lux, with color selection by Owner.

Provisions, equipment, and accessories for the physically handicapped will be provided in all areas as required by the appropriate building code.

(blank)

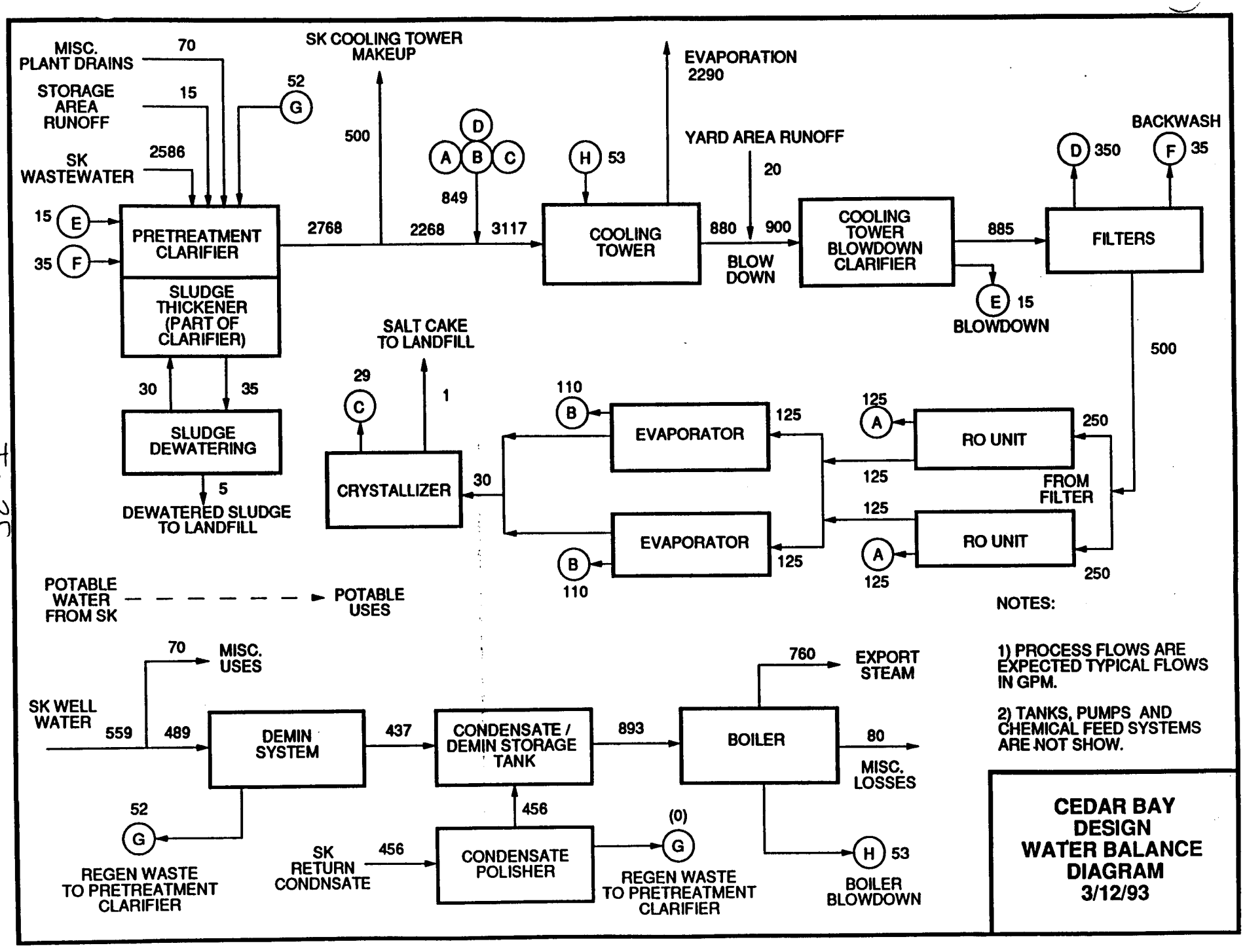
MISC. PLANT DRAINS
70
STORAGE AREA RUNOFF
15
SK WASTEWATER
2586
52
G
SK COOLING TOWER MAKEUP
500
15
E
35
F
PRETREATMENT CLARIFIER
SLUDGE THICKENER (PART OF CLARIFIER)
2768
2268
D
A
B
C
849
3117
H
53
COOLING TOWER
EVAPORATION 2290
YARD AREA RUNOFF
20
880
900
BLOW DOWN
COOLING TOWER BLOWDOWN CLARIFIER
885
FILTERS
D
350
BACKWASH
F
35
E
15
BLOWDOWN
500
30
35
SLUDGE DEWATERING
5
DEWATERED SLUDGE TO LANDFILL
29
C
SALT CAKE TO LANDFILL
1
CRYSTALLIZER
30
110
B
EVAPORATOR
125
125
A
RO UNIT
250
125
FROM FILTER
125
EVAPORATOR
B
110
125
A
125
RO UNIT
250
POTABLE WATER FROM SK
POTABLE USES
70
MISC. USES
SK WELL WATER
559
489
DEMIN SYSTEM
437
CONDENSATE / DEMIN STORAGE TANK
893
BOILER
760
EXPORT STEAM
80
MISC. LOSSES
52
G
REGEN WASTE TO PRETREATMENT CLARIFIER
SK RETURN CONDNSATE
456
456
CONDENSATE POLISHER
(0)
G
REGEN WASTE TO PRETREATMENT CLARIFIER
H
53
BOILER BLOWDOWN
NOTES:
1) PROCESS FLOWS ARE EXPECTED TYPICAL FLOWS IN GPM.
2) TANKS, PUMPS AND CHEMICAL FEED SYSTEMS ARE NOT SHOW.
CEDAR BAY DESIGN WATER BALANCE DIAGRAM 3/12/93

WASTE STREAM DATA

Wastewater Streams

The wastewater streams generated at the Cedar Bay Plant are as follows:

1) Boiler blowdown
2) Demineralizer regeneration waste
3) Miscellaneous plant drains
4) Storage area runoff
5) Yard area runoff
6) Wastewater treatment system drains
7) Cooling tower blowdown
8) Chemical cleaning waste

These wastewater streams are used as follows:

1) Boiler blowdown is sent directly to the cooling tower basin without treatment for reuse as cooling tower makeup.

2) Demineralizer regeneration waste is neutralized, softened in the cooling tower pretreatment system and reused as cooling tower makeup.

3) Miscellaneous plant drains are softened in the cooling tower pretreatment system and reused as cooling tower makeup.

4) Storage area runoff is collected in the storage area runoff basin. When the turbine generator is in operation, it is softened in the cooling tower pretreatment system and reused as cooling tower makeup. When the turbine generator is not in operation, it is sent to the emergency water storage tank and held until it can be treated in the pretreatment clarifier, cooling tower blowdown clarifier or evaporator system for reuse as cooling tower makeup.

5) Yard area runoff is collected in the yard area runoff basin. When the turbine generator is in operation, it is pumped into the cooling tower blowdown line where a portion of it is softened in the cooling tower blowdown system and the remaining portion is used as evaporator crystallizer non–contact cooling water. When the turbine generator is not in operation, it is storage in the yard area runoff basin until the it is needed for cooling tower makeup. All the yard area runoff water is reused as cooling tower makeup except for runoff in excess of a 25 year 24 hour storm with the turbine generator in operation and a 10 year 24 hour storm with the turbine generator out of operation.

6) Wastewater treatment system drains are softened in the cooling tower pretreatment system and reused as cooling tower makeup.

7) Cooling tower blowdown is treated in the zero discharge system for reuse as cooling tower makeup. The cooling tower blowdown is softened, filtered, and desalted in a reverse osmosis (RO) system. The RO product water (low dissolved solids) is reused as cooling tower makeup. The RO reject water (high dissolved solids) is farther concentrated in the evaporators. The evaporator distillate is reused as cooling tower makeup and the evaporator concentrate is processed in the crystallizer. The crystallizer produces a distillate that is reused in the cooling tower and solid salt that is disposed of offsite.

8) Chemical cleaning waste is disposed of offsite. The rinses following chemical cleaning will be reused as cooling tower makeup or disposed of offsite.

All the wastewater streams generated in the Cedar Bay facility, except yard area runoff in excess of the design storm events, are reused as cooling tower makeup. Seminole Kraft (SK) wastewater is used to supply all cooling tower makeup requirements in excess of that which can be supplied by the Cedar Bay wastewater streams. There is no discharge of process wastewater generated at Cedar Bay.

The expected average flows for each of the wastewater streams are listed in Table 1.

The average demand for Cedar Bay cooling tower makeup is expected to be approximately 3,200 gpm, including recovered cooling tower blowdown. Additionally, SK is expected to reuse 400 to 500 gpm of treated wastewater from the Cedar Bay pretreatment system as makeup to the SK cooling tower.

The quality of the mixed wastewater feed to the pretreatment system and effluent quality expected from the pretreatment clarifier and the cooling tower blowdown clarifier after filtration are listed in Table 2.

Solid Waste Streams

The wastewater treatment plant produces one sludge stream from the filter press (dewatered pretreatment and cooling tower blowdown clarifier sludge) and one and solid salt stream from the centrifuge (dewatered crystallizer slurry).

The pretreatment and cooling tower blowdown clarifier sludge is collected in the thickener portion of the pretreatment clarifier and pumped on a batch basis to the filter press. The solids in the sludge are captured on cloth filters in the press as the pump forces the sludge through the filters. Sludge is pumped to the filter press until it is filled with solids. The plates holding the filters are then opened and the sludge is dropped into a sludge container. The filter press is expected to produce

sludge containing 40 to 60 percent solids. With the design analysis water, the sludge production is expected to be approximately 75 tons per day based on 40 percent solids sludge.

The soluble salts in the cooling tower blowdown are concentrated to the point that they are precipitated as crystals in the crystallizer. The slurry formed in the crystallizer is pumped to the centrifuge where the crystals are removed from the slurry and dewatered. The concentrated liquid from the centrifuge is returned to the crystallizer. The dewatered salt crystals drop by gravity from the centrifuge to a container. The solids content of the salt is expected to be in the 85 to 90 percent range. With the design analysis water, the solid salt production is expected to be approximately 30 tons per day based on 85 percent solids salt.

The filled sludge and salt containers will either be hauled directly to the approved disposal site or covered and stored at the Cedar Bay site until they can be hauled to the approved disposal site.

The dewatered clarifier sludge will consists primarily of calcium carbonate and magnesium hydroxide from the lime soda softening reactions. The dewatered crystallizer salt will consist primarily of sodium sulfate and sodium chloride. The expected characteristics of the clarifier sludge and crystallizer salt are listed in Table 3. The sludge and salt characteristics were estimated based on an analysis of SK clarifier effluent from samples taken on February 10, 1993. The SK clarifier is the treatment unit ahead of the SK lagoons.

Table 1
Cedar Bay Expected Average Wastewater Flows

STREAM	FLOW GPM
Boiler blowdown	53
Demineralizer regeneration waste	52
Miscellaneous plant drains	70
Storage area runoff	15
Yard area runoff	20
Wastewater treatment system drains	50
Cooling tower blowdown	900
Chemical cleaning waste	0

Table 2
Expected Mixed Wastewater and Treated Wastewater Quality

Constituent	Units	Pretreat. Clarifier Feed	Pretreat. Clarifier Product	Blowdown Clarifier Product
Calcium	mg/l $vCaCO_3$	545	50	150
Magnesium	mg/l $CaCO_3$	270	50	50
Sodium	mg/l $CaCO_3$	903	1,160	9,000
Potassium	mg/l $CaCO_3$	15	15	100
M–Alkalinity	mg/l $CaCO_3$	540	60	80
Sulfate	mg/l $CaCO_3$	890	890	6,600
Chloride	mg/l $CaCO_3$	300	322	2,600
Fluoride	mg/l $CaCO_3$	3	3	20
Phosphate	mg/l PO_4	2	0.2	1
Boron	mg/l	2.4	2.4	16
Aluminum	mg/l	2.1	0.2	0.1
Iron	mg/l	1.1	0.1	0.1
Manganese	mg/l	0.7	0.05	0.05
Barium	mg/l	0.2	0.05	0.1
Strontium	mg/l	1.6	1	5
Silica	mg/l	59	25	40
pH	Std units	6–9	8–10	8–10
TOC	mg/l	115	105	600
TSS	mg/l	50	10	1
TDS	mg/l	2400	1900	12,500

Table 3
Cedar Bay Expected Constituents in Sludge/Salt Produced by Treatment Unit

SUBSTANCE	DETECTED	UNITS	PRETREAT SLUDGE	CT B'DWN SLUDGE	CRYST'L SALT	TOTAL	NOTES
CN	no	lb/day	0.00	0.00	0.89	0.89	See note 6
Sb	no	lb/day	0.00	0.00	1.49	1.49	
As	yes	lb/day	0.00	0.00	0.89	0.89	
Be	no	lb/day	0.00	0.00	0.15	0.15	
Cd	no	lb/day	0.00	0.09	0.06	0.15	
Cr	yes	lb/day	0.00	0.00	0.45	0.45	
Cu	yes	lb/day	0.00	0.12	0.29	0.41	
Pb	yes	lb/day	0.00	0.10	0.29	0.39	
Hg	no	lb/day	0.0000	0.0000	0.0060	0.0060	
Ni	yes	lb/day	0.00	0.07	0.29	0.36	
Se	no	lb/day	0.00	0.00	0.15	0.15	
Ag	no	lb/day	0.0000	0.0000	0.0014	0.0014	
Zn	yes	lb/day	0.00	1.36	3.48	4.83	
Tl	no	lb/day	0.00	0.00	0.15	0.15	
Phenols	yes	lb/day	0.00	0.00	3.28	3.28	
Chloroform	no	lb/day	0.00	0.00	0.05	0.05	See note 7

Notes:

1) The concentrations are from Betz February 10, 1993 data from SK clarifier effluent except for copper (0.015 mg/l) and silver (0.00005 mg/l) which are set at the SK discharge permit limits. There may be some reduction in concentration of the constituents in the SK aerated lagoons.

2) Assumed that 500 gpm of pretreament clarifier effluent is returned to SK for use in the SK cooling tower and that the total flow from the SK wastewater treatment system is 9 MGD. The cooling tower makeup returned to SK is assumed to pass through the SK wastewater treatment system without removal of the constituents listed resulting in a net increase in SK effluent concentration relative to the Betz data for all constituents except copper and silver.

3) Ten cycles of concentration are assumed in the Cedar Bay cooling tower based on January 1993 SK effluent chemistry data.

4) "no" in the "Detected Column" indicates that the constituent was not detected so the actual concentration in the sludge is less than the value indicated except for chloroform which was detected at less than the quantitation limit.

5) Significant variation in the actual actual concentration of the constituents in the sludge is expected for the following reasons:

a) The results of only a single sample analyzed by EPA methods is available.

b) The sample was taken at the SK clarifier. SK lagoon effluent is Cedar Bay's source of treated SK effluent so there is no data on the actual primary makeup water source to the Cedar Bay cooling tower.

c) The concentrations of constituents in both the pretreatment and blowdown clarifier feed water are too low for reliable estimation of removal. No removal was predicted for the pretreatment system but some removal of suspended material and some copreciptation may occur. Partial removal of some constituents is estimated in the blowdown clarifier additonal constituents may be partially removed as suspended material and through copreciptation may also occur.

d) The wastewater streams originating in the Cedar Bay plant (approx. 5% of total flow) are not included.

6) Expect a reduction in the concentration of cyanide from biological treatment and chlorination.

7) Phenols concentrations will be reduced by biological treatment.

(blank)

CEDAR BAY PROJECT
ZERO DISCHARGE SYSTEM
JOB NO. 22029-003

System Description for the Cooling Tower Makeup Pretreatment System

BECHTEL CORPORATION
GAITHERSBURG, MARYLAND

NO.	DATE	REVISION	BY	CHK'D	APPROVALS	
0	3/10/93	Issued for use	RR	SBN	PKS	AN

TABLE OF CONTENTS

		Page
1.0	FUNCTION	1
2.0	DESIGN BASIS	2
3.0	SYSTEM OPERATION	3
4.0	SYSTEM CONTROLS	4
5.0	SYSTEM COMPONENTS	5
6.0	UNRESOLVED MATTERS	6
7.0	REFERENCES	6

SYSTEM DESCRIPTION

COOLING TOWER MAKEUP PRETREATMENT SYSTEM

1.0 FUNCTION

1.1 The main function of the cooling tower makeup pretreatment (CT Makeup Pretreatment) system is to receive and treat the following streams in an Infilco Degremont Inc (IDI) DensaDeg® clarifier system:

- SK wastewater
- plant drain sump discharge consisting of:
  - condensate polisher drain
  - plant oil/water separator effluent
  - miscellaneous building drains
  - boiler blowdown
- plant storage area runoff
- plant sludge dewatering system filtrate
- neutralization tank effluent
- Miscellaneous zero discharge system drains
- Dual media pressure filter backwash

The system is shown on P&ID M74-LG01.

1.2 The CT Makeup Pretreatment system will satisfy the plant cooling tower makeup requirements during normal and reduced load operation and upset conditions. The system will also provide up to 500 gpm of treated water to SK for use in their cooling tower.

1.3 An additional function of this system is to thicken the pretreatment clarifier slurry and the slurry transferred from the cooling tower blowdown treatment clarifier. The thickening and dewatering system is common to both the cooling tower pretreatment and blowdown treatment systems and is achieved in the bottom portion of the DensaDeg® clarifier.

1.4 The lime and soda ash storage and feed systems are shared by both the cooling tower makeup pretreatment and the cooling tower blowdown treatment systems.

1.5 The bulk chemical storage tanks (acid, caustic, and sodium hypochlorite) are common to all systems within the zero discharge system.

1.6 The coagulant storage tank is used for the cooling tower makeup pretreatment system.

2.0 DESIGN BASES

2.1 The CT Makeup Pretreatment system is designed to treat an influent stream of up to 5500 gpm. The daily average rate of softened, water produced is approximately 2800 gpm.

2.2 The system is designed with the flexibility to include the treatment of up to 1200 gpm of stormwater.

2.3 The DensaDeg® clarifier will be sized to provide a slurry holding volume consistent with requirements of both the CT pretreatment and CT blowdown treatment systems.

2.4 The sludge dewatering system is sized to treat sludge from both the CT makeup pretreatment clarifier and the CT blowdown treatment clarifier.

2.5 The system is designed to treat an influent water of the following typical characteristics:

Characteristic	Low Value	Typical Value	High Value	Units
Calcium	240	550	600	mg/l as $CaCO_3$
Magnesium	100	270	600	mg/l as $CaCO_3$
Sodium	300	920	2,800	mg/l as $CaCO_3$
Potassium	10	15	20	mg/l as $CaCO_3$
M-Alkalinity	240	550	600	mg/l as $CaCO_3$
P-Alkalinity	0	0	0	mg/l as $CaCO_3$
Sulfate (SO_4)	300	892	3,000	mg/l as $CaCO_3$
Chloride	100	310	400	mg/l as $CaCO_3$
Fluoride	1.5	3	8	mg/l as $CaCO_3$
Phosphate (PO_4)	1	3	5	mg/l as PO_4
Boron (B)	1	3	5	mg/l
Aluminum	0.2	0.5	2.2	mg/l
Iron	0.5	1	10	mg/l
Manganese	0.3	0.5	2	mg/l
Barium	0.1	0.25	0.7	mg/l
Strontium	1	2	6	mg/l
Vanadium	0.01	0.05	0.1	mg/l
Arsenic	0.05	0.2	0.3	mg/l
Silica (SiO_2)	25	35	160	mg/l
pH	6	7	9	SU
TOC	40	120	200	mg/l
TSS	20	50	100	mg/l
TDS	900	2,400	5,500	mg/l

Design influent water is a mixture of all streams except site runoff.

The low and high values are the expected range of each constituent. The actual analysis may contain some constituents at the high end of the concentration range and others at the low end of the concentration range.

2.5 The system is designed to produce an effluent with the following characteristics:

Characteristic	Value	Units
Calcium	40	mg/l
Magnesium	50	mg/l
Silica	25	mg/l
M-Alkalinity	60	mg/l as $CaCO_3$
P-Alkalinity	40	mg/l as $CaCO_3$
Suspended Solids	10	mg/l
pH	9 to 11	SU

3.0 SYSTEM OPERATION

3.1 Normal Operation

The pretreatment system influent flow is pumped into a reaction tank which is provided with a turbine mixer and a draft tube arrangement. In this tank, ferric chloride, sodium hypochlorite, a polymer, lime slurry, and soda ash are added and combined with preformed solids circulated from a DensaDeg® clarifier to coagulate organics and suspended solids to be settled downstream in the DensaDeg® clarifier.

The reaction tank effluent flows by gravity into the pretreatment (DensaDeg®) clarifier, where the suspended and precipitated solids are removed.

The softened effluent flows by gravity from the DensaDeg® clarifier to the clearwell. Sulfuric acid is fed in the effluent weir of the clarifier to lower the pH. The pH adjusted effluent is pumped as needed to the Cedar Bay cooling tower and the SK cooling tower.

3.2 Storm Water Management

When rainwater accumulates in the storage area runoff basin, the transfer pumps automatically start and pump water at a rate of 1200 gpm to the Pretreatment system. If the turbine generator is offline, the storage area runoff is directed to the emergency water storage tank.

3.3 Power Plant Wastewater Management

Cooling tower blowdown, plant oil/water separator effluent, miscellaneous building drains, neutralization tank effluent, drains from the zero discharge system, sludge dewatering filtrate, and dual media filter backwash flow to the wastewater holdup tank, which will act as an equalization basin. Water from the wastewater holdup tank is pumped to pretreatment system.

3.4 SK Wastewater Management

SK wastewater supplements the flow to the pretreatment system to maintain the desired flow through the pretreatment system. The flow rates of wastewater to the pretreatment system are controlled by level in the clearwell.

3.5 Thickener and Sludge Dewatering System Operation

A thickener is incorporated in the lower portion of the DensaDeg® clarifier to feed the sludge dewatering system with thickened slurry for the removal of suspended solids. The sludge dewatering system filtrate is transfered to the wastewater holdup tank via a filtrate sump and pump(s). The sludge dewatering system is designed to produce a filter cake which contains approximately 40 to 60% solids.

4.0 SYSTEM CONTROLS

4.1 The control system will select water for pretreatment to the clearwell in the following order:

a. Cedar Bay storage area runoff (via runoff pond)
b. Cedar Bay plant wastewater (via wastewater holdup tank)
c. SK wastewater

4.2 Flow to the pretreatment system will be controlled by level in the clearwell. A combination of level and flow transmitter signals in the PLC will be used to control the pretreatment clarifier influent flow and open the selected influent flow control valves.

4.3 Level signals from the clearwell shut-off the system influent control valves as required.

4.4 The chemical metering/feed pumps will be furnished with electronic positioners to control chemical flow based on a flow signal for coagulant, polymer, and soda ash and a pH signal for lime, and sulfuric acid. Additional adjustments for increase or decrease in chemical dosage rates will be manual. Lime and soda ash will be fed through automatic control valves off a recirculating slurry loop.

4.5 The controls for the system will be integrated with the overall zero discharge system CRT. PLCs with I/O units will be furnished to CRTs and printers.

4.6 The following instruments are provided for the local/automatic control functions and monitoring of the system:

- Reaction tank pH transmitter/controller
- Clearwell pH transmitter/controller
- Clearwell high/low level controls
- Clarifier inlet flow transmitter/controller
- Clarifier effluent turbidity

5.0 SYSTEM COMPONENTS

The main components comprising the cooling tower pretreatment system are:

a. Reaction tank
b. DensaDeg® clarifier with external sludge recirculation pumps and rake lifting device, and accessories
c. DensaDeg® slurry pumps (dewatering system feed pumps)
d. Pretreatment system clearwell and clearwell transfer pumps
e. Chemical feed systems:

   - Soda ash silo, volumetric feeder, mixing tank, soda ash slurry transfer pumps (common to both CT Makeup Pretreatment and CT Blowdown treatment systems)
   - Lime silo, volumetric feeder, slurry tank, slurry transfer pumps (common to both CT Makeup Pretreatment and CT Blowdown treatment systems)
   - Coagulant (ferric chloride) storage tank and metering/feed pumps
   - Polymer dilution and feed system
   - Acid storage tank (common to all zero discharge systems) and metering/feed pumps
   - Dewatering system polymer dilution tank, mixer metering
   - Hypochlorite storage tank (common to all zero discharge systems) and metering/feed pumps
   - Caustic storage tank (common to all zero discharge systems) and metering/feed pumps

f. Sludge dewatering system (plate and frame filter press) and accessories
g. Wastewater holdup tank
h. Wastewater transfer pumps
i. Filtrate sump and sump pumps

6.0 UNRESOLVED MATTERS

7.0 REFERENCES

- P&ID M74-LG01 and M74-LG02
- Flow diagram - Cooling Tower Makeup Pretreatment System
- Flow diagram - Cooling Tower Blowdown Treatment System

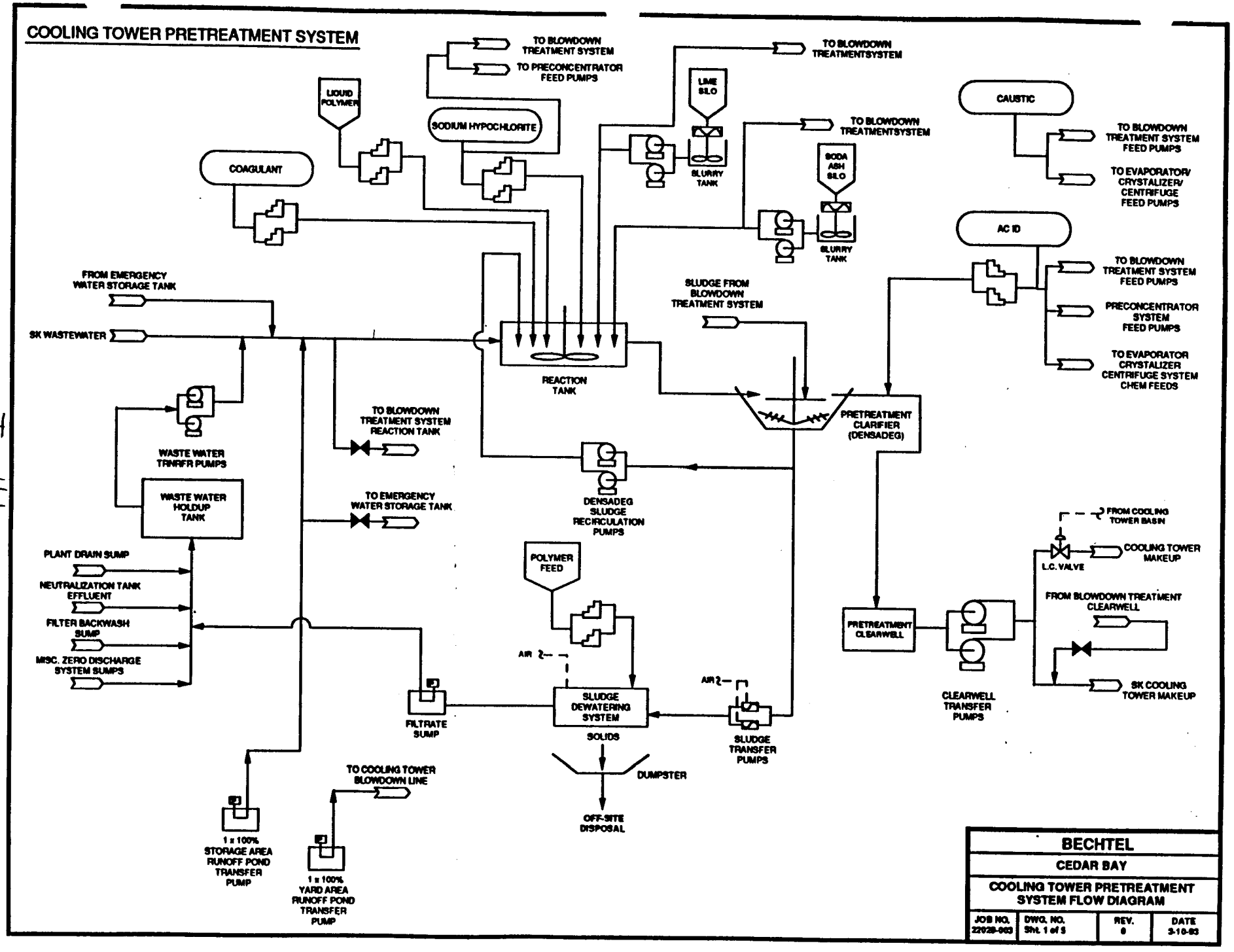
COOLING TOWER PRETREATMENT SYSTEM
TO BLOWDOWN TREATMENT SYSTEM
TO PRECONCENTRATOR FEED PUMPS
LIQUID POLYMER
SODIUM HYPOCHLORITE
COAGULANT
LIME SILO
SLURRY TANK
TO BLOWDOWN TREATMENTSYSTEM
TO BLOWDOWN TREATMENTSYSTEM
SODA ASH SILO
SLURRY TANK
CAUSTIC
TO BLOWDOWN TREATMENT SYSTEM FEED PUMPS
TO EVAPORATOR/ CRYSTALIZER/ CENTRIFUGE FEED PUMPS
AC ID
TO BLOWDOWN TREATMENT SYSTEM FEED PUMPS
PRECONCENTRATOR SYSTEM FEED PUMPS
TO EVAPORATOR CRYSTALIZER CENTRIFUGE SYSTEM CHEM FEEDS
FROM EMERGENCY WATER STORAGE TANK
SK WASTEWATER
SLUDGE FROM BLOWDOWN TREATMENT SYSTEM
REACTION TANK
PRETREATMENT CLARIFIER (DENSADEG)
WASTE WATER TRNRFR PUMPS
TO BLOWDOWN TREATMENT SYSTEM REACTION TANK
WASTE WATER HOLDUP TANK
TO EMERGENCY WATER STORAGE TANK
DENSADEG SLUDGE RECIRCULATION PUMPS
PLANT DRAIN SUMP
NEUTRALIZATION TANK EFFLUENT
FILTER BACKWASH SUMP
MISC. ZERO DISCHARGE SYSTEM SUMPS
POLYMER FEED
AIR
AIR
SLUDGE DEWATERING SYSTEM
SOLIDS
DUMPSTER
OFF-SITE DISPOSAL
FILTRATE SUMP
SLUDGE TRANSFER PUMPS
TO COOLING TOWER BLOWDOWN LINE
1 x 100% STORAGE AREA RUNOFF POND TRANSFER PUMP
1 x 100% YARD AREA RUNOFF POND TRANSFER PUMP
FROM COOLING TOWER BASIN
L.C. VALVE
COOLING TOWER MAKEUP
FROM BLOWDOWN TREATMENT CLEARWELL
PRETREATMENT CLEARWELL
CLEARWELL TRANSFER PUMPS
SK COOLING TOWER MAKEUP
BECHTEL
CEDAR BAY
COOLING TOWER PRETREATMENT SYSTEM FLOW DIAGRAM
JOB NO. 22028-003
DWG. NO. Sht. 1 of 5
REV. 0
DATE 3-10-93

(blank)

CEDAR BAY PROJECT
ZERO DISCHARGE SYSTEM
JOB NO. 22029-003

System Description for the Cooling Tower Blowdown Treatment System

BECHTEL CORPORATION
GAITHERSBURG, MARYLAND

NO.	DATE	REVISION	BY	CHK'D	APPROVALS	
0	3/10/93	Issued for use	[illegible]	SGN	PKS	AN

TABLE OF CONTENTS

		Page
1.0	FUNCTION	1
2.0	DESIGN BASIS	1
3.0	SYSTEM OPERATION	3
4.0	SYSTEM CONTROLS	3
5.0	SYSTEM COMPONENTS	4
6.0	UNRESOLVED MATTERS	4
7.0	REFERENCES	4

SYSTEM DESCRIPTION

COOLING TOWER BLOWDOWN TREATMENT SYSTEM

1.0 FUNCTION

1.1 The main function of the cooling tower blowdown (CT Blowdown) treatment system is to remove scaling and fouling impurities from the Cooling Tower blowdown. Yard area runoff is pumped into the cooling tower blowdown line. A portion of this cooling tower blowdown and yard area runoff combined flow is treated in the cooling tower blowdown treatment system and the remainder is used for cooling in the zero discharge system and returned to the cooling tower. The system is shown on P&ID M74-LG02.

1.2 The desired chemistry in the system effluent is achieved by controlling the chemical feeds as required:

a. Lime and soda ash feeds are shared with the CT Makeup Pretreatment system, but controlled with separate control valves

b. Acid, caustic,magnesium chloride, and sodium hypochlorite feeds are controlled by individual metering/feed pumps

2.0 DESIGN BASIS

2.1 Impurities to be removed from the blowdown include calcium, magnesium, bicarbonate, silica, suspended solids, barium, and organics. These impurities must be maintained at acceptable levels in the cooling tower circulating water.

2.2 The system is designed to treat an influent stream of up to 1,000 gpm in a non-scraping type accelerated rate settling tank (accelerator) which is preceded by a premix/reaction tank to produce a softened effluent of the desired chemistry.

2.3 The 1,000 gpm system size selected for the softening process will have sufficient capacity to treat the cooling tower blowdown generated during normal and reduced plant load operation, and upset conditions.

2.4 The bulk caustic tank is shared between the cooling tower blowdown treatment system, the evaporator/concentrator system, and the crystallizer and centrifuge system.

2.5 The magnesium solution system is used only for the cooling tower blowdown system.

2.6 The chemical feed pumps are sized to provide the required dosage rates under average chemistry conditions as well as under expected water quality excursions. Under extreme excursions, both chemical feed pumps can operated to meet the chemical dosage requirements.

2.7 The system is designed to treat an influent water of the following typical characteristics:

Characteristic	Low Value	Typical Value	High Value	Units
Calcium	150	350	1000	mg/l as $CaCO_3$
Magnesium	150	300	400	mg/l as $CaCO_3$
Sodium	4000	8475	10,000	mg/l as $CaCO_3$
Potassium	50	150	200	mg/l as $CaCO_3$
M-Alkalinity	50	150	200	mg/l as $CaCO_3$
P-Alkalinity	0	0	0	mg/l as $CaCO_3$
Sulfate (SO_4)	3300	6800	8000	mg/l as $CaCO_3$
Chloride	1000	2300	3000	mg/l as $CaCO_3$
Fluoride	10	25	30	mg/l as $CaCO_3$
Phosphate (PO_4) (note 1)	0.1	2	10	mg/l as PO_4
Boron (B)	5	20	30	mg/l
Aluminum	0.1	0.5	5	mg/l
Iron	0.5	2	5	mg/l
Manganese	0.05	0.1	1	mg/l
Barium	0.5	1	2.5	mg/l
Strontium	5	10	15	mg/l
Vanadium	0.1	0.5	1	mg/l
Arsenic	0.5	2	3	mg/l
Silica (SiO_2)	60	120	150	mg/l
pH	7	8	8.3	SU
TOC	200	500	800	mg/l
TSS	50	100	150	mg/l
TDS	6000	12,500	15,000	mg/l

Note 1. Phosphates could be as high as 10 to 15 ppm (as PO_4), based on the scale/ corrosion inhibitor selected.

Note 2. The low and high values are the expected ranges of each constituent and the actual analysis may contain some constituents at the high end of the concentration range and others at the low end of the concentration range.

2.8 The system is designed to produce an effluent with the following characteristics (to be confirmed after vendor's input):

Characteristic	Value	Units
Calcium	150	mg/l
Magnesium	50	mg/l
Suspended solids	< 10	mg/l
Silica	40	mg/l

3.0 SYSTEM OPERATION

The cooling tower blowdown stream is pumped to the pre-mix/blowdown reaction tank which is supplied with a mixer. Sodium hypochlorite is injected into the premix/reaction tank. After a 5 minute detention time, the stream exits the tank by a gravity overflow into the CT blowdown clarifier.

In the CT blowdown clarifier, lime, soda ash, magnesium solution, and a polymer (coagulant aid) are added to induce precipitation for the removal of impurities as referenced above. Soda ash is added in sufficient quantity to remove calcium to low levels and as much magnesium as necessary. Magnesium solution is added to remove silica. Caustic is added to increase pH further if necessary.

As precipitation occurs, colloids, some organics, and other impurities are also removed. Sludge accumulated is discharged on an automatic basis to a sludge blowdown sump from where it is pumped to the pretreatment clarifier (DensaDeg®) for common sludge dewatering treatment.

The wastewater effluent flows by gravity into the blowdown clarifier clearwell. Acid is added in the clarifier effluent and to depress the pH and reduce the potential for calcium carbonate scaling. The preconcentrator filter feed pumps take suction from the CT blowdown clarifier clearwell (refer to the Reverse Osmosis System Description).

4.0 SYSTEM CONTROLS

4.1 The system is configured to normally operate at a relatively fixed, designated flowrate established by control of the cooling tower blowdown stream. This rate is controlled by the cooling tower blowdown clarifier inlet valve.

4.2 The chemical metering/feed pumps will be furnished with electronic positioner to control suction flow clarifier influent flow. The pH in the clarifier will be automatically controlled by the addition of caustic, the clearwell pH will also be automatically controlled. Additional adjustments for increase or decrease in chemical dosage rates will be manual.

4.3 The controls for the system will be integrated with the overall zero discharge CRT system controls. PLC's with I/O units will be furnished to interface with the zero discharge system CRT's and printers.

4.4 The following instruments are provided for local automatic control functions and monitoring of the system:

- clearwell tank level transmitter
- clearwell high/low level controls
- clarifier inlet flow transmitter/controller
- clarifier pH transmitter/controller
- clarifier effluent pH transmitter/controller

5.0 SYSTEM COMPONENTS

The main components comprising the cooling tower blowdown treatment system are:

a. Premix/blowdown reaction tank
b. Blowdown clarifier with accessories
c. Blowdown sump and sump pumps
d. Blowdown clarifier clearwell
e. Chemical feed systems:

- Magnesium solution metering/feed pumps
- Acid metering/feed pumps
- Sodium hypochlorite metering/feed pumps
- Polymer storage/dilution tank and metering/feed pumps
- Caustic metering/feed pumps
- Hypochlorite metering/feed pumps

The lime and soda ash are shared with the CT Makeup Pretreatment system.

6.0 UNRESOLVED MATTERS

7.0 REFERENCES

- P&ID M74-LG01 and LG02
- Flow Diagram-Cooling Tower Blowdown Treatment System
- Flow Diagram-Cooling Tower Makeup Pretreatment System

COOLING TOWER BLOWDOWN TREATMENT SYSTEM

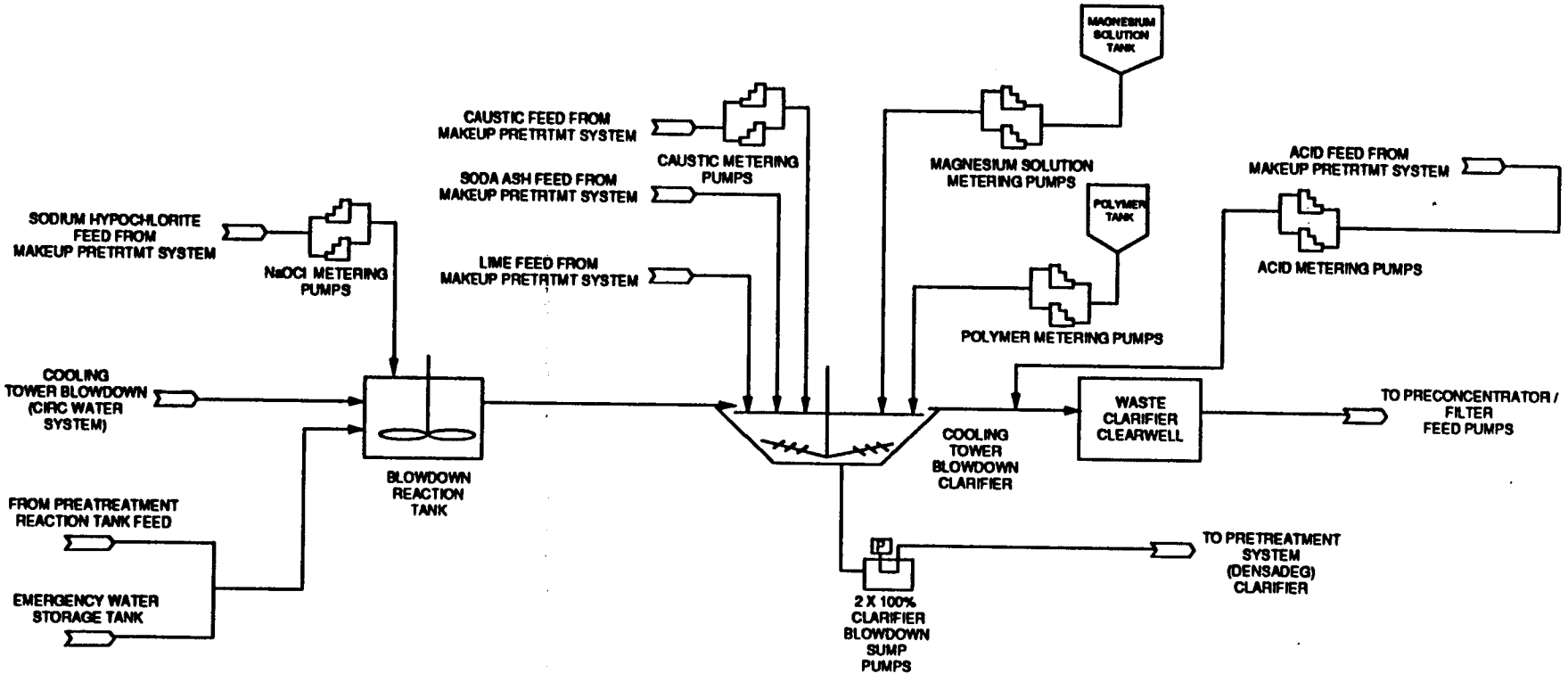

BECHTEL			
CEDAR BAY			
COOLING TOWER BLOWDOWN TREATMENT SYSTEM FLOW DIAGRAM			
JOB NO. 22029-003	DWG. NO. Sht. 2 of 3	REV. 0	DATE 3-10-93

I-49

(blank)

CEDAR BAY PROJECT
ZERO DISCHARGE SYSTEM
JOB NO. 22029-003

System Description for the Reverse Osmosis System

BECHTEL CORPORATION
GAITHERSBURG, MARYLAND

NO.	DATE	REVISION	BY	CHK'D	APPROVALS	
0	3/10/93	Issued for use	RK	SBN	PKS	AW

TABLE OF CONTENTS

		Page
1.0	FUNCTION	1
2.0	DESIGN BASIS	1
3.0	SYSTEM OPERATION	3
4.0	SYSTEM CONTROLS	4
5.0	SYSTEM COMPONENTS	5
6.0	UNRESOLVED MATTERS	5
7.0	REFERENCES	5

SYSTEM DESCRIPTION

REVERSE OSMOSIS SYSTEM

1.0 FUNCTION

1.1 The Reverse Osmosis (RO) system has two parts: dual media filters and RO treatment. The system is shown in P&ID M74-LG02.

1.1 The function of the dual media filters is to reduce the total suspended solids (TSS) concentrations of softened cooling tower blowdown to allow normal trouble-free operation of the RO system. The system is shown on P&ID M74-LG02.

1.2 The function of the RO system is to reduce the total dissolved solids (TDS) of the softened cooling tower blowdown for reuse as cooling tower makeup.

2.0 DESIGN BASES

2.1 Four 33% capacity dual media pressure filters are sized to handle full RO feed flow while one filter is in the backwash mode.

2.2 The RO system designed for a total feed flow of 650 gpm at 60 percent overall recovery in the 80°F to 95°F temperature range. The RO system feed flow capacity will drop off with temperature and is designed for 550 gpm feed at 65°F and 60 percent overall recovery.

2.3 The RO system is designed to recover from 35 to 60 percent of the feed water for reuse in the cooling tower. The recovery rate selected for operation will be determined during operation based on RO feed water chemistry. The RO units are designed for average 90% total dissolved solids removal.

2.4 The RO system is designed for uninterrupted operation. This is achieved by keeping the RO system on-line during filter backwashes. A tank sized for one filter backwash is provided.

2.5 Influent Water Quality

Characteristic	Low Value	Typical Value	High Value	Units
Calcium	100	200	400	mg/l as $CaCO_3$
Magnesium	10	50	100	mg/l as $CaCO_3$
Sodium	4000	8930	11,050	mg/l as $CaCO_3$
Potassium	50	150	250	mg/l as $CaCO_3$
M-Alkalinity	25	80	200	mg/l as $CaCO_3$
P-Alkalinity	0	10	100	mg/l as $CaCO_3$
Sulfate (SO_4)	3000	7000	8000	mg/l as $CaCO_3$
Chloride	1000	2220	4000	mg/l as $CaCO_3$
Fluoride (Note)	10	30	40	mg/l as $CaCO_3$
Phosphate (PO_4)	0.1	1	3	mg/l as PO_4
Boron (B)	5	20	30	mg/l
Aluminum	0.1	0.2	0.5	mg/l
Iron	0.1	0.3	0.5	mg/l
Manganese	0.05	0.05	0.1	mg/l
Barium (Note)	0.5	3	5	mg/l
Strontium	5	10	15	mg/l
Vanadium	0.1	0.5	1	mg/l
Arsenic	0.5	2	3	mg/l
Silica (SiO_2)	30	40	50	mg/l
pH	7.5	8.5	9.5	SU
TOC (Note)	200	500	800	mg/l
TSS (Note)	50	100	150	mg/l
TDS	6000	12,500	15,000	mg/l

Note 1. These parameters are best estimates without the benefit of complete treatment elsewhere in the system.

Note 2. Design influent water is a mixture of all streams except site runoff.

Note 3. The low and high values are the expected range of each constituent and the actual analysis may contain some constituents at the high end of the concentration range and others at the low end of the concentration range.

2.6 The system is designed to produce an effluent with the following characteristics (later):

Characteristic	Value	Units
Calcium	later	mg/l
Magnesium	later	mg/l
Silica	later	mg/l
M-Alkalinity	later	mg/l as $CaCO_3$
Suspended Solids	0	mg/l
pH	later	
TDS	later	

3.0 SYSTEM OPERATION

3.1 Softened cooling tower blowdown (from the blowdown clarifier) is pumped via preconcentrator filter feed pumps for treatment in the dual media filters and the cartridge filters and delivered to the RO booster pumps.

3.2 The RO booster pumps pump the RO feedwater through the RO units to the RO product tank from where it is pumped via RO product pumps to the cooling tower basin. A portion is also sent for reuse in the in the zero discharge system.

3.3 The RO brine flows under pressure to the emergency brine storage tank. From the emergency storage tank the RO brine is pumped to the evaporator feed tank by the emergency water transfer pumps.

3.4 Sulfuric acid is continuously injected at the RO inlet header prior to the cartridge filters for pH adjustment of the feed stream to prevent calcium carbonate scale formation on the RO membranes. Two 100% capacity positive displacement metering pumps take suction from the common acid storage tank.

3.5 An antiscalant is continuously injected at the RO feed inlet header for additional protection against scaling of the RO membranes. Two 100% capacity positive displacement metering pumps take suction from the antiscalant feed tank.

3.6 Sodium hypochlorite is also continuosly injected at the RO feed inlet for biofouling control. Two 100 % capacity positive displacement metering pumps take suction from the sodium hypochlorite storage tank.

3.6 Flow through the RO system is continuous, with both RO units operating simultaneously in parallel under design conditions at full plant load. During partial load, one RO unit may be shutdown. The RO product will flow to the RO product tank.

3.8 The RO product pumps supply the dilution water to the antiscalant mixing tank, the RO cleaning system and for RO membrane flushing on shutdown.

3.9 The RO chemical cleaning system is periodically used to clean the RO membranes by circulating a cleaning solution through the RO units and back to the RO chemical cleaning tank. The spent solution is hauled off-site for disposal.

3.10 During normal operation, the RO brine will be processed directly by the evaporator system (without need for storage in the emergency storage tank).

3.11 A stream from the filter effluent is diverted to a filtered water tank for storing filtered water for backwash. The filter backwash pumps take suction from this tank.

4.0 SYSTEM CONTROLS

4.1 The system operation will be shutoff on low level switch in the blowdown clarifier clearwell, or by manual initiation. Restart of the RO system will be manually initiated. Out of range influent water chemistry (conductivity) will be alarmed.

4.2 The chemical metering/feed pumps will be furnished with electronic positioners to control suction flow based on RO feed flow. Additional adjustments for increase or decrease in chemical dosage rates will be manual.

- pH control will be automatic

4.3 Initiation of the RO chemical cleaning system will be manual, based on a differential pressure of the RO feed and RO brine or on operator's demand.

4.4 The controls for the system will be integrated with the overall zero discharge system controls. PLCs and I/O units will be furnished to interface with the zero discharge system CRTs and printers.

4.5 The following instruments are provided for local/automatic control functions and monitoring of the system:

- Pressure differential indication across the dual media pressure filter system
- Pressure differential across the cartridge filters
- Pressure gauges in feed, product and brine headers of each RO system
- Level switch on the filter backwash storage tank
- Flow control valve in the feed line
- Flow control valve in the brine line
- Conductivity meter in the RO product line.
- RO feed pH
- Brine conductivity
- Brine flow
- RO feed flow rate
- RO feed pressure switch
- RO feed temperature
- RO feed conductivity
- RO feed oxidation reduction potential

I-56

5.0 SYSTEM COMPONENTS

5.1 The main components comprising the RO system are:

- Preconcentrator/Filter feed pumps (three @ 50%) taking suction from the blowdown clarifier clearwell
- Dual media pressure filters (four @ 33%), backwash pumps, air blowers
- Filtered water tank
- RO cartridge filters (two @ 50%)
- RO booster pumps (two @ 50%)
- RO units (two @ 50%)
- RO product tank
- RO product pumps (2 @100%)
- Emergency water transfer pumps (2 @ 100% taking suction from the emergency water storage tank
- Acid metering/feed pumps
- Antiscalant storage tank, and metering/feed pumps
- RO cleaning system (RO cleaning tank, pump, cartridge filters and accessories)
- Emergency water storage tank (1,000,000 gallons)

6.0 UNRESOLVED MATTERS

- RO product water quality
- RO brine water quality

7.0 REFERENCES

- P&ID M74-LG01 and LG02
- Flow Diagram-Reverse Osmosis Treatment System

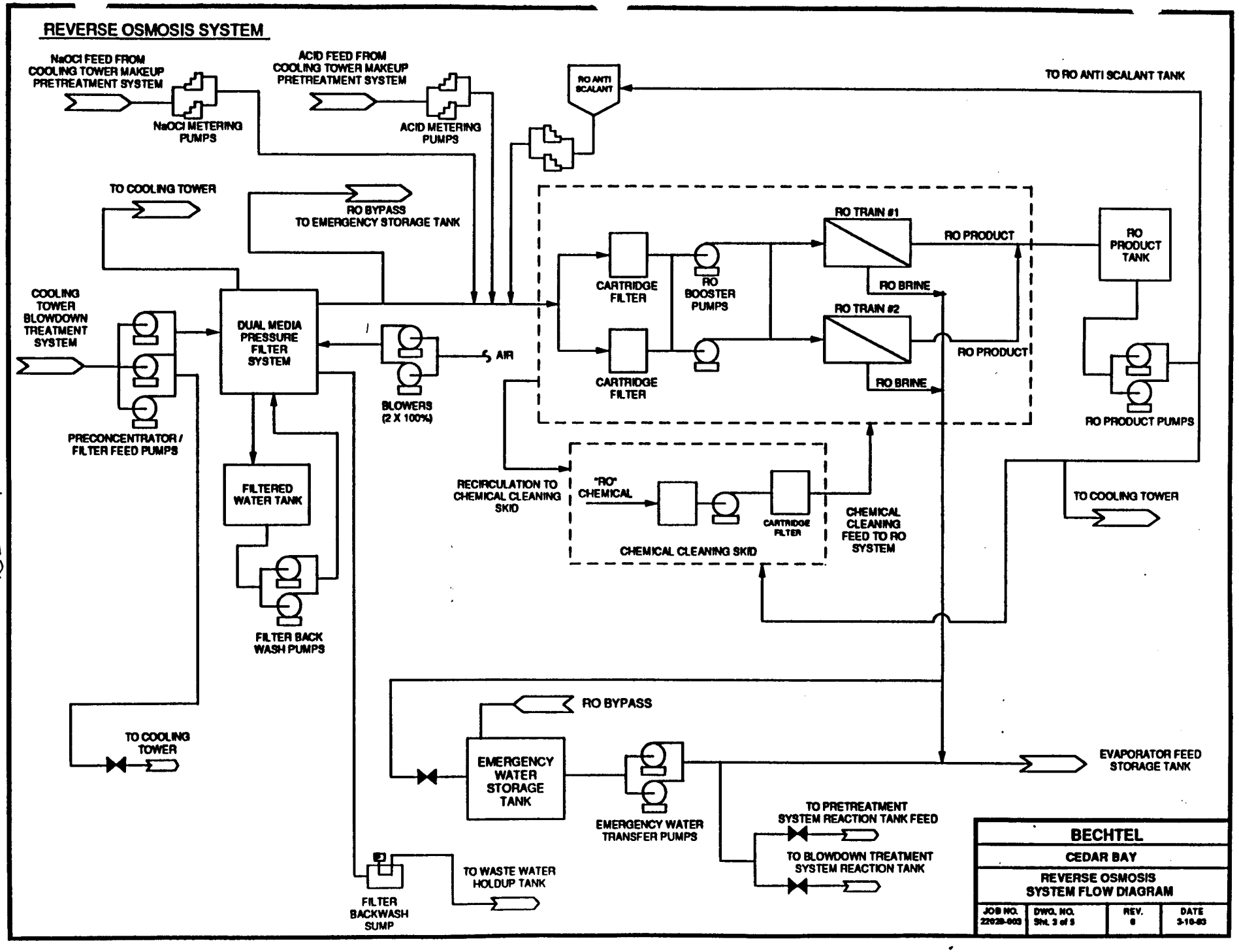
REVERSE OSMOSIS SYSTEM
NaOCl FEED FROM COOLING TOWER MAKEUP PRETREATMENT SYSTEM
NaOCl METERING PUMPS
ACID FEED FROM COOLING TOWER MAKEUP PRETREATMENT SYSTEM
ACID METERING PUMPS
RO ANTI SCALANT
TO RO ANTI SCALANT TANK
TO COOLING TOWER
RO BYPASS TO EMERGENCY STORAGE TANK
COOLING TOWER BLOWDOWN TREATMENT SYSTEM
PRECONCENTRATOR / FILTER FEED PUMPS
DUAL MEDIA PRESSURE FILTER SYSTEM
BLOWERS (2 X 100%)
AIR
CARTRIDGE FILTER
RO BOOSTER PUMPS
RO TRAIN #1
RO PRODUCT
RO BRINE
RO TRAIN #2
RO PRODUCT
RO BRINE
CARTRIDGE FILTER
RO PRODUCT TANK
RO PRODUCT PUMPS
FILTERED WATER TANK
FILTER BACK WASH PUMPS
RECIRCULATION TO CHEMICAL CLEANING SKID
"RO" CHEMICAL
CARTRIDGE FILTER
CHEMICAL CLEANING SKID
CHEMICAL CLEANING FEED TO RO SYSTEM
TO COOLING TOWER
TO COOLING TOWER
RO BYPASS
EMERGENCY WATER STORAGE TANK
EMERGENCY WATER TRANSFER PUMPS
EVAPORATOR FEED STORAGE TANK
TO PRETREATMENT SYSTEM REACTION TANK FEED
TO BLOWDOWN TREATMENT SYSTEM REACTION TANK
FILTER BACKWASH SUMP
TO WASTE WATER HOLDUP TANK
BECHTEL
CEDAR BAY
REVERSE OSMOSIS SYSTEM FLOW DIAGRAM
JOB NO. 22020-003
DWG. NO. Sht. 3 of 5
REV. 0
DATE 3-10-83

CEDAR BAY PROJECT
ZERO DISCHARGE SYSTEM
JOB NO. 22029-003

System Description for the Evaporator / Concentrator System

BECHTEL CORPORATION
GAITHERSBURG, MARYLAND

NO.	DATE	REVISION	BY	CHK'D	APPROVALS	
0	3/10/93	Issued for use	RJ	SBN	RKS	

TABLE OF CONTENTS

		Page
1.0	FUNCTION	1
2.0	DESIGN BASIS	1
3.0	SYSTEM OPERATION	2
4.0	SYSTEM CONTROLS	4
5.0	SYSTEM COMPONENTS	5
6.0	UNRESOLVED MATTERS	5
7.0	REFERENCES	5

SYSTEM DESCRIPTION

EVAPORATOR/CONCENTRATOR SYSTEM

1.0 FUNCTION

1.1 One of the functions of the evaporator/concentrator system is to treat RO brine and produce a distillate stream suitable for use as cooling tower make-up.

1.2 Another function of the evaporator/concentrator system is to further concentrate the RO brine and reduce its volume for treatment in the crystallizer.

This system is shown on P&ID M74-LG03.

2.0 DESIGN BASIS

2.1 Each evaporator train is designed to treat RO brine stream at a flow rate of 150 gpm at the typical chemistry as shown in Section 2.4. The train is designed to produce a distillate or product water stream and a concentrated brine stream which can be further treated in the crystallizer.

2.2 Each evaporator train is designed to treat a feed stream of up to influent salt concentrations as specified in Section 2.4 under maximum conditions and to concentrate this stream to a slurry that can be handled in the evaporator wetted parts.

2.3 The system is designed with the seeded technology with the proper chemical feeds to treat water and meet treatment efficiencies under three different influent operating chemistries:

- RO brine under high sodium, calcium, chloride and sulfate; medium silica conditions, with $CaSO_4$ addition for calcium concentration requirements
- Cooling tower basin water condition under low sodium, calcium, chloride, sulfate and silica conditions
- Cooling tower basin water condition under high sodium, chloride, sulfate, silica and low calcium conditions

2.4 The system is designed to treat an influent water of the following typical characteristics:

Characteristic	Low Value	Typical Value	High Value	Units
Calcium	100	300	1000	mg/l as $CaCO_3$
Magnesium	20	150	250	mg/l as $CaCO_3$
Sodium	8500	16,000	25,0000	mg/l as $CaCO_3$
Potassium	100	250	400	mg/l as $CaCO_3$
M-Alkalinity	0	50	100	mg/l as $CaCO_3$
P-Alkalinity	0	0	0	mg/l as $CaCO_3$
Sulfate (SO_4)	7000	12,500	20,000	mg/l as $CaCO_3$
Chloride	1700	4100	7000	mg/l as $CaCO_3$
Fluoride	20	50	70	mg/l as $CaCO_3$
Phosphate (PO_4)	0.1	0.5	25	mg/l as PO_4
Boron (B)	10	35	50	mg/l
Aluminum	0.1	0.5	10	mg/l
Iron	0.1	0.3	3	mg/l
Manganese	0.05	0.1	1	mg/l
Barium	0.2	1	5	mg/l
Strontium	10	20	35	mg/l
Vanadium	0.4	1	3	mg/l
Arsenic	1	3	10	mg/l
Silica (SiO_2)	30	100	150	mg/l
Ph	4	5.5	8	SU
TOC	100	500	800	mg/l
TSS	0	1	10	mg/l
TDS	12000	23,000	35,000	mg/l

Note 1. Design influent water is a mixture of all streams routed to the cooling tower as makeup except site runoff.

Note 2. The low and high values are the expected range of each constituent. The actual analysis may contain some constituents at the high end of the concentration range and others at the low end of the concentration range.

2.5 The condensate stream produced will meet the following water quality requirements:

- o dissolved solids: less than 10 ppm, excluding organics and volitiles
- o suspended solids: none

3.0 SYSTEM OPERATION

3.1 In each of the two evaporator trains, feedwater consisting of RO brine/reject and other wastewater from the emergency water storage tank is fed to the evaporator feed tank. Sulfuric acid is added to neutralize alkalinity. Anti-scalant solution is added at the tank outlet. The evaporator feed pumps convey the feedwater to each evaporator.

3.2 In each train, the feedwater is passed through plate-type preheat exchangers to preheat the feedwater with hot condensate product from the evaporator. The cooled condensate product is sent to the cooling tower basin.

3.3 The preheated feed stream is conveyed to the deaerator where carbon dioxide, oxygen and other non-condensible gases are removed and vented to the atmosphere.

3.4 In each train, deaerator pumps discharge the deaerated and decarbonated brine feed to the evaporator. The feed is mixed with vessel recirculation flow and a portion is evaporated.

3.5 Vapor collected in the vapor body is cleaned of entrained liquids and solids.

- a 180° change in flow direction from the falling film heater exits to the vapor body exit
- gravity-induced settling of droplets in the rising vapor flow across the vapor body area
- impingement collection of droplets and particles in the mist eliminator
- an external mesh-type entrainment separator

3.6 The product vapor stream is collected and passed through a single-stage centrifugal compressor where the product stream's vapor pressure is increased to the condensing temperature of the heater shell.

3.7 The compressed vapor stream is introduced in the shell side of the heater. The vapor stream sweeps through the tube bundle, giving up its heat to the influent/recycle stream on the other side of the tubes.

3.8 The majority of the compressed vapor is condensed in the vessel as it falls and gives up it's heat, collecting in the vessel well and the distillate level tank, external to the evaporator vessel. There, the hot condensate is pumped by the distillate transfer pumps through the preheat exchangers and sent to the cooling tower.

3.9 With the removal of the product water vapor out of the vapor body, the concentration of dissolved solids left in solution increases, precipitating additional calcium sulfate. Normally, the calcium sulfate would precipitate out on the vessel and heat transfer surfaces. This is prevented by maintaining a large mass of finely-divided calcium sulfate crystals in a slurry, and recycling the slurry at high flow rates. The large mass of finely divided particles offers "seed" crystal sites, upon which additional salts preferentially precipitate and crystallize out of solution.

3.10 In each evaporator a recycle stream is taken from the bottom of the evaporator and sent back to the top. A portion is sent through a separator, which removes a portion of the precipitated salt.

3.11 Initial seeding is provided by adding calcium chloride to the system. Caustic is added to the evaporator to maintain proper precipitating chemistry and further reduce scaling within the evaporator vessel. Anti-foam agent solution is added to the concentrator to control foaming.

3.12 The evaporator brine slurry streams from the separators in each train are conveyed to the crystallizer feed tank, where they are pumped to the crystallizer and centrifuge system (see Crystallizer and Centrifuge System Description).

4.0 SYSTEM CONTROLS

4.1 The main operation of the evaporator system is controlled by adjusting the inlet guide vane setting on the suction side of the centrifugal vapor compressor. The guide vanes are variable pitch, and are adjusted through a vapor flow controller/vane positioner control loop, which adjusts the vapor flow rate between the compressor and the evaporator/concentrator vessel. This control loop provides for a 50% turn-down of the process.

4.2 Overall compressor capacity is set by the operator, with the evaporator slurry storage volume providing system dampening and time to adjust compressor capacity to respond to changing conditions. Density of the salt slurry for recycle in the sump of the evaporator is measured and the concentration is managed by a flow control loop through the separator, seed recycle tank and seed recycle pumps, or by cascading from a density controller.

4.3 Excess vapor from the compressor not used for desuperheating or deaerating is vented to the atmosphere.

4.4 Flow rate into the evaporator/concentrator vessel is controlled by level control in the vessel sump. Flow rate into the evaporator/concentrator feed/storage tank is controlled by tank level. Evaporator/concentrator pH is controlled by addition of sulfuric acid, controlled by pH.

4.5 The controls for the system will be integrated with the overall zero discharge system controls.

5.0 SYSTEM COMPONENTS

5.1 The main components comprising the evaporator/concentrator system (both trains) are:

- Two brine evaporators
- Two vapor compressors
- Two concentrator recirculating pumps
- Two deaerators
- Four deaerator pumps
- Two trains of plate-type preheat exchangers
- Two separators
- Two seed/recycle tanks
- Two seed recycle pumps
- Two distillate tanks
- Four distillate transfer pumps
- One evaporator feed tank

6.0 UNRESOLVED MATTERS

7.0 REFERENCES

- P&ID M74-LG03 & LG04
- Flow diagram - Evaporator/Concentrator System
- Flow diagram - Crystallizer/Centrifuge System

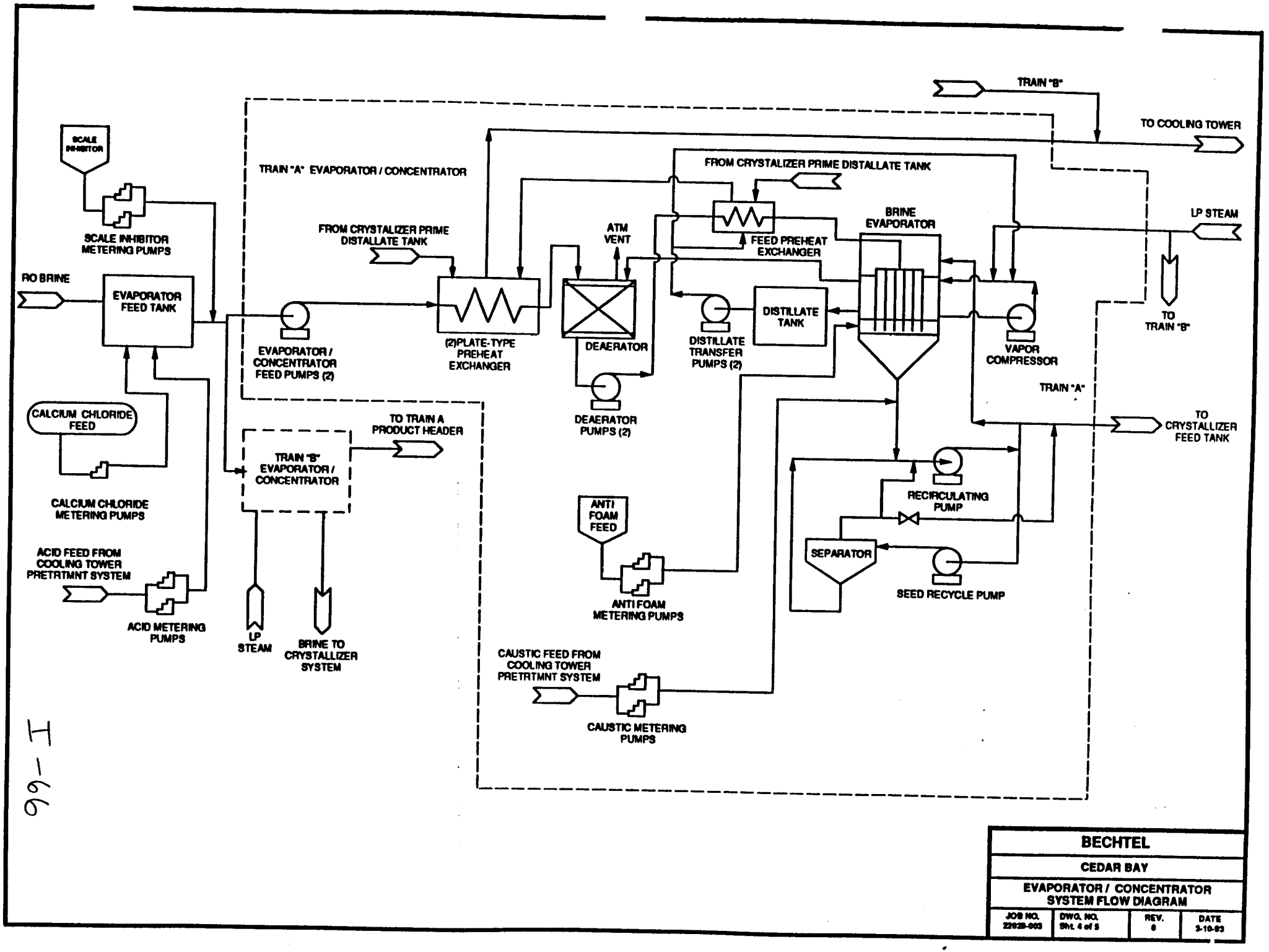

BECHTEL			
CEDAR BAY			
EVAPORATOR / CONCENTRATOR SYSTEM FLOW DIAGRAM			
JOB NO. 22029-003	DWG. NO. Sht. 4 of 5	REV. 0	DATE 3-10-93

T-66

CEDAR BAY PROJECT
ZERO DISCHARGE SYSTEM
JOB NO. 22029-003

System Description for the Crystalizer and Centrifuge System

BECHTEL CORPORATION
GAITHERSBURG, MARYLAND

NO.	DATE	REVISION	BY	CHK'D	APPROVALS	
0	3/10/93	Issued for use	RJK	SGN	PKS	AW

TABLE OF CONTENTS

		Page
1.0	FUNCTION	1
2.0	DESIGN BASIS	1
3.0	SYSTEM OPERATION	1
4.0	SYSTEM CONTROLS	2
5.0	SYSTEM COMPONENTS	2
6.0	UNRESOLVED MATTERS	3
7.0	REFERENCES	3

- Two crystallizer feed pumps
- One slurry storage tank with agitator
- Two slurry transfer pumps
- One centrifuge
- Two hotwell transfer pumps
- Desuperheating station
- Thermocompressor

6.0 UNRESOLVED MATTERS

- Crystallizer feed and slurry concentration
- Feed and product flow
- Power and steam use

7.0 REFERENCES

- P&ID M74-LG03 and LG04
- Flow Diagram-Crystallizer/Centrifuge System

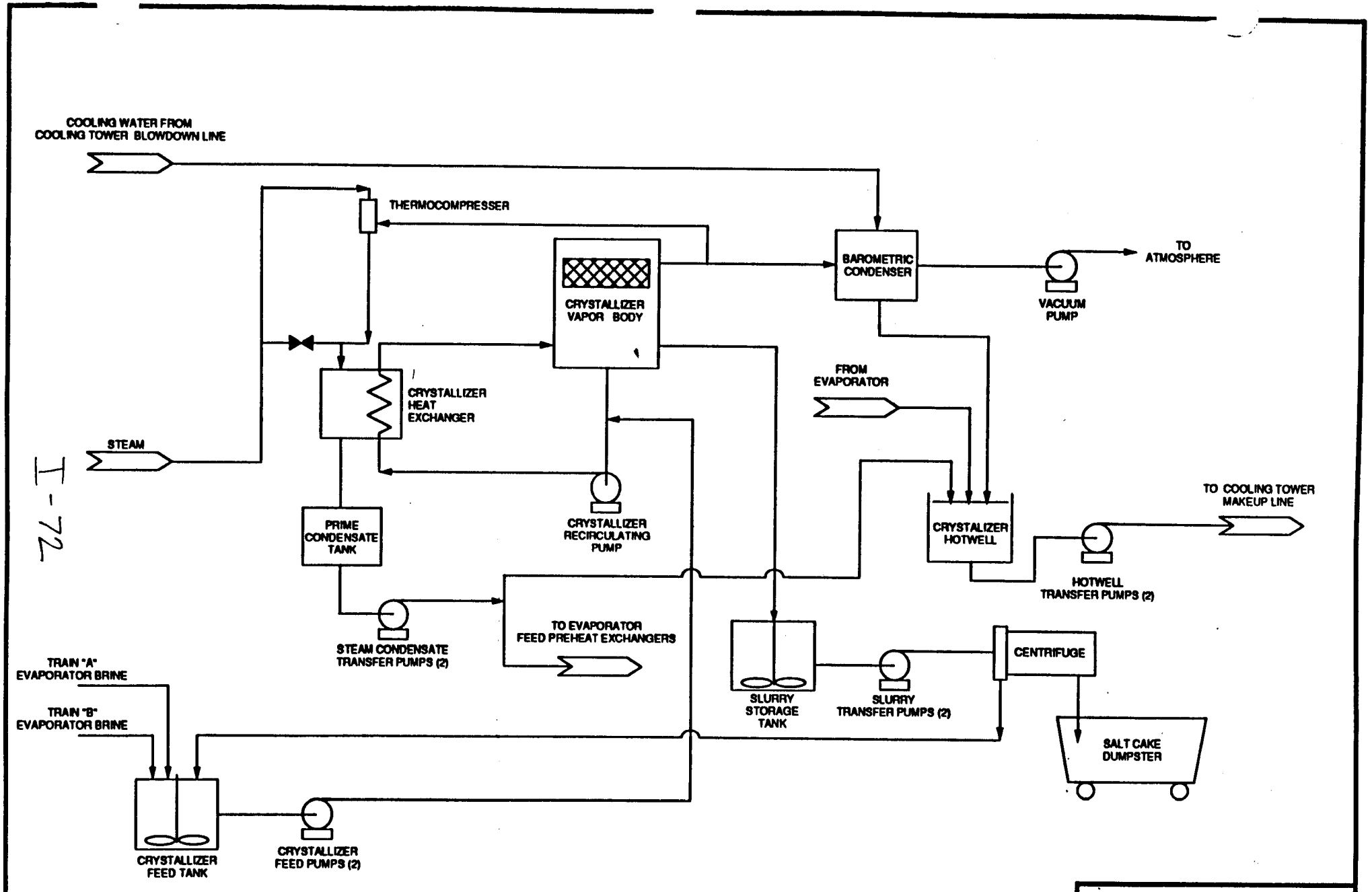

I - 72

BECHTEL			
CEDAR BAY			
CRYSTALLIZER / CENTRIFUGE SYSTEM FLOW DIAGRAM			
JOB NO. 220239-003	DWG. NO. Sht. 5 of 5	REV. 0	DATE 3-10-83

SYSTEM DESCRIPTION

CRYSTALLIZER AND CENTRIFUGE SYSTEM

1.0 FUNCTION

1.1 The function of the crystallizer and centrifuge system is to receive the brine from the two evaporator trains and produce condensate-quality water for use as cooling tower makeup.

1.2 Another function of this system is to concentrate or dewater the remaining solids in the crystallizer slurry with a centrifuge to produce a near-dry waste for off-site disposal.

The system is shown on P&ID M74-LG04.

2.0 DESIGN BASIS

2.1 The single-train crystallizer and centrifuge system is designed to treat a concentrator brine slurry from the two evaporator trains at a design flow of 50 gpm.

2.2 The crystallizer is designed to produce distillate-quality condensate for return to the cooling towers, and a salt slurry.

2.3 The centrifuge is designed to produce a near-dry (10 to 15% design moisture content) salt crystal cake. The extracted liquid and remaining dissolved solids are returned to the crystallizer feed tank.

3.0 SYSTEM OPERATION

3.1 The crystallizer portion of the system is designed to concentrate the salt slurry from the evaporator system to a higher % salt slurry. The crystallizer slurry is then pumped to a centrifuge, where most of the remaining free liquid is removed, leaving a dry salt cake.

3.2 The crystallizer process commences with evaporator waste slurry combining with centrifuge centrate return in the agitated crystallizer feed tank, and being fed to the suction side of the crystallizer recirculating pump by the crystallizer feed pumps.

3.3 The recirculating pump circulates the combined feed and recycle stream through a steam heated heat exchanger and the crystallizer vapor body. This crystallizer stream, or liquor, picks up heat from the heat exchanger, and enters the vapor body of the crystallizer and flashes due to the vacuum produced by the barometric condenser.

3.4 The steam used for heating the crystallizer feed liquor in the heat exchanger condenses after giving up its heat, and is pumped to the crystallizer hotwell via the steam condensate transfer pumps.

3.5 The flashed vapor in the crystallizer vapor body passes through an internal entrainment separator to remove any entrained droplets in the stream, and is drawn into the barometric condenser. In the barometric condenser, the vapors are quenched and condensed with a spray of cooling water into the hotwell.

3.6 The distillate and quench water in the hotwell are pumped to the cooling tower basin by the hotwell transfer pumps.

3.7 A portion of the recycle slurry liquor is separately drawn off the bottom of the crystallizer vapor body to the agitated slurry storage tank. From here, slurry transfer pumps send the 50% total solids slurry to the centrifuge.

3.8 The centrifuge separates most of the remaining free water and dissolved solids out of the slurry, and sends the liquid centrate and its dissolved solids content back to the crystallizer feed tank. The dry salt cake product drops into a roll-off dumpster for offsite disposal.

4.0 SYSTEM CONTROLS

4.1 Vendor standard controls.

4.2 The controls for the system will be integrated with the overall zero discharge system controls.

5.0 SYSTEM COMPONENTS

5.1 The main components comprising the crystallizer and centrifuge system are:

- One crystallizer vapor body: with internal mist entrainment separator
- One crystallizer heat exchanger
- One crystallizer recirculating pump
- One vacuum pump
- One vacuum pump vent condenser
- One barometric condenser with hotwell
- Two steam condensate transfer pumps
- One crystallizer feed tank with agitator

APPENDIX J

EXECUTIVE SUMMARY
AIR QUALITY IMPACTS ANALYSIS

EXECUTIVE SUMMARY

The objective of the information presented in this document is to provide data useful for assessing:

1) whether, on balance, the air pollutant emissions and air quality impacts of the Cedar Bay Cogeneration Project (CBCP), as proposed to be modified, and the addition of the three new proposed package boilers scheduled for the Seminole Kraft Corporation (SKC) site necessary to provide 640,000 lb. of steam per hour for SKC's use, will be less than the emissions and air quality impacts of the future SKC recycling operation, providing 640,000 lb. of steam per hour for SKC's use without the CBCP.

2) whether, on balance, the permitted air pollutant emissions and air quality impacts of the CBCP, as proposed to be modified, and the addition of the three new proposed package boilers scheduled for the SKC site at their permitted capacity, will be less than the emissions and air quality impacts of the CBCP as certified;

3) whether, on balance, the permitted air pollutant emissions and air quality impacts of the CBCP, as proposed to be modified, and the addition of the three new proposed package boilers scheduled for the SKC site at their permitted capacity, will be less than the emissions and air quality impacts of the future SKC recycling operation at permitted capacity without the power plant;

4) whether the CBCP, as proposed to be modified, would either cause or contribute to a violation of an ambient air quality standard (AAQS) or cause or contribute to a violation of the allowable Prevention of Significant Deterioration (PSD) increments, in either the region surrounding the facility (a PSD Class II area) or the two distant PSD Class I areas. The two PSD Class I areas are the Okefenokee and Wolf Island Wilderness areas in Georgia. In addition, information is presented to provide data useful for assessing whether the CBCP would produce air toxics concentrations above the Draft Florida No Threat Levels (NTLs);

5) whether the CBCP, as proposed to be modified, would induce significant indirect pollutant emissions as result of directly related growth, create adverse impacts on soils, vegetation or visibility, and whether the cooling tower vapor plume would cause significant fogging or icing on nearby transportation routes; and

6) updated information on air emission controls and emission rates. The lower air pollutant emission rates for the CBCP CFB boilers, and the inclusion of a new add-on technology (selective non-catalytic reduction) may require some changes to the original conditions of certification and air permit. To provide the State and EPA with accurate and updated information on the project for review of the proposed changes, ENSR, on behalf of U.S. Generating Company, developed a technical review of the air emission controls and emission rates.

The "CBCP as certified" refers to the facility as described in the Final Order and Power Plant Site Certification PA 88-24 dated February 11, 1991 and the March 28, 1991 Final Determination by the FDER, Permit No. PSD-FL-137. The "CBCP as proposed to be modified" refers to the facility as described in the Amended Petition for Modification of Certification filed with the Division of Administrative Hearings on July 22, 1992, plus further improvements proposed by the CBCP.

The "future SKC Recycling Operation without the power plant" refers to the two bark and three oil-fired boilers presently at the SKC site as they could be operated should the CBCP not be. In this hypothetical future case, without the CBCP, it is ENSR's understanding that the exhausts of the three power boilers would be combined and exhausted through a newly constructed 125-foot stack to lessen susceptibility to aerodynamic downwash effects caused by nearby structures.

The "addition of the three new proposed package boilers scheduled for the SKC site necessary to provide the 640,000 lb of steam for SKC's use" refers to three package boilers proposed by SKC capable of producing a total of 375,000 lb/hr of steam. For purposes of the technical analyses, it is assumed that the 640,000 lb/hr steam requirement is met by the CBCP supplying 380,000 lb/hr and the SKC package boilers supplying 260,000 lb/hr.

The "addition of the three new proposed package boilers scheduled for the SKC site at their permitted capacity" refers to these same boilers producing a total of 375,000 lb/hr of steam.

The proposed SKC package boilers will be capable of accommodating either fuel oil or natural gas. Not yet permitted, these boilers will, according to the SKC permit application, fire No. 2 distillate fuel oil with a maximum sulfur content of 0.5% and an annual average sulfur content of 0.3%.

In making the assessments for pollutant emissions, the maximum annual emissions of health criteria pollutants, other regulated pollutants, and non-regulated air toxics pollutants are compared. To compare the air quality impacts, evaluate compliance with the AAQS and PSD increments, compare the air quality impacts to the draft NTLs, evaluate soils, vegetation and

visibility impacts, and characterize cooling tower impacts, comprehensive atmospheric dispersion modeling was performed in accordance with EPA and Florida DER Guidelines.

Table ES-1 illustrates the difference in annual pollutant emissions between CBCP as proposed to be modified plus the SKC package boilers, and the future SKC recycling operation (both cases at 640,000 lb/hr steam usage by SKC). This table demonstrates the decreases or increases in the actual annual emissions of four categories of pollutants by operating the CBCP and the SKC package boilers and shutting down the SKC power and bark boilers. The health criteria and PSD increment pollutants are those for which ambient air quality standards or PSD increments have been established. The total regulated pollutants include the criteria and all PSD regulatory pollutants. Non-regulated air toxics represent twenty different compounds emitted by the sources in question which are included in the list of 751 compounds cited in Florida's Draft Air Toxics Permitting Strategy. In aggregating health criteria, PSD increment and regulated pollutants, TSP and PM-10 are treated as individual pollutants exclusive of one another, although PM-10 are a portion of TSP. Because PM-10 and TSP are also treated exclusively when comparing ambient impacts (the health criteria standards address PM-10 while the PSD increments address TSP), the emissions comparisons treats them as different pollutants for consistency with the standards and PSD increments.

The comparisons of annual emissions shown in Table ES-1 assume that the SKC package boilers always fire fuel oil. To the extent that they fire natural gas on an annual basis, the decreases in emissions would be greater. As shown in Table ES-1 decreases in air pollutant emissions are achieved by the CBCP, as proposed to be modified, in each category, except non-regulated air toxics.

A comparison of air quality impacts between the CBCP, as proposed to be modified plus the SKC package boilers, and the SKC recycling operation without the CBCP (both cases at 640,000 lb/hr steam usage by SKC) is summarized in Table ES-2. The table summarizes the changes due to the CBCP as proposed to be modified and the SKC package boilers for each criteria pollutant as well as total air toxics. Three values are listed for each pollutant: 1) the change to the maximum predicted concentration of the pollutant anywhere (higher, lower or insignificant maximum concentration); 2) the net effect on air quality on a regional basis in terms of the highest predicted pollutant concentrations (improved, insignificant, or degraded); and 3) the percent of locations for which modeling was performed which showed a net benefit in terms of the highest concentrations. A total of 1008 locations, referred to as "model receptors," were addressed. The majority of these fall within 10 kilometers of the CBCP, but a portion extend as far as 25 kilometers. As shown in Table ES-2, the CBCP as proposed to be modified and the SKC package boilers result in either lower or insignificant maximum concentrations of all criteria pollutants and total air toxics, a net

TABLE ES-1

CBCP as Proposed to be Modified Plus SKC Package Boilers
vs.
SKC Recycling
(Both Cases at 640,000 lb/hr Steam for SKC)
Net Change in Annual Emissions Due To
CBCP and SKC Package Boilers Firing Oil

Pollutants Category	Net Change
Health Criteria and PSD Increments	Decrease 343 tons
Total Regulated	Decrease 594 tons
Total Non-Regulated Air Toxics	Increase 29 tons
Total Pollutants	Decrease 565 tons

R:\FUBO\FBNJBOTTO\5402027\851.EXT

TABLE ES-2

CBCP as Proposed to be Modified Plus SKC Package Boilers
vs.
SKC Recycling
(Both Cases at 640,000 lb/hr Steam)
Air Quality Changes Due to CBCP Plus SKC Package Boilers Firing Oil[a]

Pollutant	Maximum Concentration	Net Regional Air Quality Effect	Percent of Locations with Air Quality Benefit
3-hour SO_2	Lower	Improved	97.6
24-hour SO_2	Lower	Improved	98.2
Annual SO_2	Lower	Improved	99.5
24-hour PM-10	Lower	Improved	98.2
Annual PM-10	Higher	Insignificant	91.4
1-hour CO	Insignificant	Insignificant	Not applicable
8-hour CO	Insignificant	Insignificant	Not applicable
Annual NO_2	Lower	Improved	99.6
Monthly Pb	Insignificant	Insignificant	Not applicable
Annual Pb	Insignificant	Insignificant	Not applicable
8-hour Air Toxics	Lower	Improved	99.6
24-hour Air Toxics	Lower	Improved	99.6
Annual Air Toxics	Lower	Improved	99.6

[a]See Section 2

improvement or insignificant change in the highest concentrations on a regional basis, and a net air quality benefit at virtually all locations.

A summary of the comparison of the maximum permitted annual pollutant emissions between CBCP as certified and CBCP as proposed to be modified plus the SKC package boilers is presented in Table ES-3. This table illustrates the decrease in emissions resulting from CBCP as proposed to be modified plus the SKC package boilers for the four pollutant categories. As shown in the table, decreases are achieved in all categories of pollutants except non-regulated air toxics, which don't change.

A summary of the differences in air quality impacts at permitted capacity between CBCP as certified and CBCP as proposed to be modified plus the SKC package boilers is presented in Table ES-4. Lower or insignificant maximum concentrations are shown to result from Cedar Bay as proposed to be modified for most pollutants with the exception of SO_2. However, the net effect on highest SO_2 concentrations is insignificant on a regional basis. Impacts of CO are insignificant in each case, so a meaningful comparison cannot be made. Annual average PM-10 impacts, although lower in terms of the maximum concentrations, are not significantly affected on a regional basis with a small number of locations experiencing a benefit. Although there is an average improvement, the magnitude of the improvement is not significant.

Table ES-5a summarizes the comparison of maximum permitted emissions between CBCP as proposed to be modified plus the SKC package boilers, and the SKC recycling operation. This table shows an increase in each of the four pollutant categories. However, these changes do not account for substantial additional decreases that are associated with the shutdown of recovery boilers, lime kilns and smelt dissolving tanks at SKC as a result of SKC converting to a recycling operation.

According to the PSD permit application for the SKC package boilers, substantial decreases in baseline emissions will be achieved. These are listed in Table ES-5b. As shown in the table, the overall result is a net decrease in the first three pollutant categories. Decreases in non-regulated air toxics were not estimated for the application, but these would also offset the increases shown in Table ES-5a at least to some extent.

Notwithstanding the above calculated emission increases, as shown in Table ES-6, maximum pollutant concentrations are lower or insignificant for the CBCP as proposed to be modified. In addition, for the individual pollutants, either a net regional air quality benefit or an insignificant change results and the vast majority of locations experience a benefit with the CBCP as proposed to be modified, compared to the SKC recycling operation.

TABLE ES-3

CBCP as Certified vs. CBCP as Proposed to be Modified Plus SKC Package Boilers
Net Change in Permitted Annual Emissions Due to CBCP as Proposed to be Modified Plus SKC Package Boilers

Pollutants Category	Net Change
Health Criteria and PSD Increments	Decrease 2,099 tons
Total Regulated	Decrease 3,519 tons
Total Non Regulated Air Toxics	No Change
Total Pollutants	Decrease 3,519 tons

R:\PUBC\PRATER\TC\5402027\851.EST

TABLE ES-4

CBCP as Certified vs. CBCP as Proposed to be Modified Plus SKC Package Boilers
Air Quality Changes Due to CBCP as Proposed to be Modified Plus SKC Package Boilers Firing Oil[a]

Pollutant	Maximum Concentration	Net Regional Air Quality Effect	Percent of Locations with Air Quality Benefit
3-hour SO_2	Higher	Insignificant	80.1
24-hour SO_2	Higher	Insignificant	73.6
Annual SO_2	Lower	Insignificant	45.6
24-hour PM-10	Lower	Insignificant	64.8
Annual PM-10	Lower	Insignificant	30.6
1-hour CO	Insignificant	Insignificant	Not Applicable
8-hour CO	Insignificant	Insignificant	Not Applicable
Annual NO_2	Lower	Insignificant	44.2
Monthly Pb	Insignificant	Insignificant	Not Applicable
Annual Pb	Insignificant	Insignificant	Not Applicable
8-hour Air Toxics	Lower	Improved	95.6
24-hour Air Toxics	Lower	Improved	95.6
Annual Air Toxics	Lower	Improved	95.4

[a]See Section 2

R:\FUBO\PROJECTS\5402027\851.EST

TABLE ES-5a

CBCP as Proposed to be Modified Plus SKC Package Boilers vs. SKC Recycling Net Change in Permitted Annual Emissions Due to CBCP as Proposed to be Modified Plus SKC Package Boilers Firing Oil

Pollutants Category	Net Change
Health Criteria and PSD Increments	Increase 270 tons
Total Regulated	Increase 20 tons
Total Non Regulated Air Toxics	Increase 36 tons
Total Pollutants	Increase 56 tons

TABLE ES-5b

Net Changes Due To Additional Sources Shutting Down[a] at SKC for Conversion to Recycling Operation

Pollutants Category	Net Change	Combined Net Change with CBCP
Health Criteria and PSD Increments	Decrease 4,668 tons	Decrease 4,398 tons
Total Regulated	Decrease 4,712 tons	Decrease 4,692 tons
[a]Recovery Boilers, Lime Kilns, Smelt Dissolving Tanks		

R:\PUBS\PROJECTS\5402027\851.EST

TABLE ES-6

CBCP as Proposed to be Modified Plus SKC Package Boilers at Permitted Capacity vs. SKC Recycling at Permitted Capacity Air Quality Changes Due to CBCP Plus SKC Package Boilers[a]

Pollutant	Maximum Concentration	Net Regional Air Quality Effect	Percent of Locations with Air Quality Benefit
3-hour SO_2	Lower	Improved	97.7
24-hour SO_2	Lower	Improved	98.1
Annual SO_2	Lower	Improved	99.5
24-hour PM-10	Lower	Insignificant	97.8
Annual PM-10	Higher	Insignificant	90.6
1-hour CO	Insignificant	Insignificant	Not Applicable
8-hour CO	Insignificant	Insignificant	Not Applicable
Annual NO_2	Lower	Improved	99.6
Monthly Pb	Insignificant	Insignificant	Not Applicable
Annual Pb	Insignificant	Insignificant	Not Applicable
8-hour Air Toxics	Lower	Improved	99.6
24-hour Air Toxics	Lower	Improved	99.6
Annual Air Toxics	Lower	Improved	99.6

[a]See Section 2

R:\PUBS\PROJECTS\5402027\851.ECT

Table ES-7 summarizes the results of the modeling for compliance with AAQS and PSD increments and for comparison to the Draft Air Toxics NTLs. For the applicable AAQS and PSD increment pollutants, the predicted compliance status is listed. "Compliance" indicates that an evaluation of all major sources in Duval County in addition to Cedar Bay demonstrates compliance with the standard. "Insignificant Impacts" indicates that no evaluation of the standard was performed since Cedar Bay impacts were insignificant. "Does not cause or contribute to a violation" indicates that all major sources in Duval County were modeled but only those total concentrations to which the Cedar Bay facility contributed a significant concentration were evaluated, and those concentrations were predicted to be below the standards. As shown in the table, the predicted compliance status for each criteria pollutant and standard is favorable. For the draft No Threat Levels, the CBCP, as proposed to be modified complies with all NTLs examined. Some compounds have NTLs for more than one averaging period.

As demonstrated by the foregoing summary and further documented herein, the Cedar Bay Cogeneration Project as proposed to be modified, plus the new proposed SKC package boilers on balance, in terms of pollutant emissions and air quality, result in lower environmental impacts than either the SKC recycling operation or the Cedar Bay facility as originally certified. In addition, the Cedar Bay Cogeneration Project, as proposed to be modified, will comply with all applicable ambient air quality standards and prevention of significant deterioration increments, neither causing nor contributing to a violation.

The results of additional analyses conducted further indicate that:

1) No additional significant emissions and thus no additional significant air quality impacts will result from any growth directly related to the CBCP of a residential, commercial or industrial nature,

2) No adverse impacts on soils or vegetation will occur due to the CBCP, in either the region surrounding the CBCP, other nearby sensitive areas, or the distant PSD Class I wilderness areas, and

3) No significant affects of the cooling tower on fogging or icing of local transportation routes or salt deposition in the area surrounding the CBCP will occur.

TABLE ES-7

CBCP as Proposed to be Modified
Compliance with Ambient Air Quality Standards (AAQS) and PSD Increments, and Comparison to Draft Air Toxics No Threat Levels (NTLs)

Pollutant	Standard	Predicted Compliance Status
SO_2	AAQS PSD Class II PSD Class I	Does Not Cause or Contribute to a Violation Does Not Cause or Contribute to a Violation Compliance
PM-10	AAQS	Does Not Cause or Contribute to a Violation
TSP	PSD Class II PSD Class I	Compliance Compliance
CO	AAQS	Insignificant Impacts
NO_2	AAQS PSD Class II PSD Class I	Does Not Cause or Contribute to a Violation Does Not Cause or Contribute to a Violation Compliance
Pb	AAQS	Insignificant Impacts
Air Toxics	Draft NTL's	Compliance

R: FIBC\PROJECTS\5402027\851.EST

APPENDIX K

EXECUTIVE SUMMARY
COMPARATIVE HUMAN HEALTH AND ECOLOGICAL RISK ASSESSMENT

ES.0 EXECUTIVE SUMMARY

ES.1 Introduction

The Cedar Bay Cogeneration Project (CBCP), is currently under construction at the Seminole Kraft Corporation (SKC) recycling facility located in Jacksonville, Florida. The CBCP includes 3 coal-fired circulating fluidized bed (CFB) boilers, capable of generating 250 MW of electricity and supplying SKC with steam, and two limestone dryers fired with No. 2 fuel oil.

In order to supply SKC with 640,000 lb/hr of steam, CBCP would have to be augmented with 3 package boilers that would be owned and operated by SKC. CBCP plus these package boilers would replace 3 oil-fired (No. 6) power boilers and 2 bark boilers currently being operated by SKC and which would have to be operated if the CBCP and package boilers were not completed.

ENSR performed a comparative human health and ecological risk assessment to ascertain whether the CBCP plus the package boilers operating at nominal capacity to produce 640,000 lb/hr of steam would have, on balance, less environmental impact than the current SKC Recycling Operation driven by the existing bark and power boilers without the CBCP and the package boilers. The following two cases were used in the assessment:

(A) Emissions from the CBCP plus 3 package boilers expected to be required at the SKC site to supplement steam delivery. The package boilers were assumed to be fired with No. 2 oil with an average annual sulfur content of 0.3%. As the package boilers may actually use natural gas, this assumption should provide a high estimate of metals emissions. For this assessment, emissions were calculated for the "average" operation of the plant, i.e., the CBCP operated at 85.5% capacity required to deliver enough electricity to the power grid consistent with the economic incentives in its power supply contract and steam at a rate of 380,000 lb/hr to SKC and 260,000 lb/hr from the package boilers.

(B) Emissions from the SKC Recycling Operation as it would be configured without CBCP and the new package boilers, delivering steam at 640,000 lb/hr. This includes 3 power boilers fueled with No. 6 oil, and 2 bark boilers with 1,000,000 gal/yr No. 6 oil and the remainder bark, a reasonable configuration for a long term assessment, given the historical operating conditions of these units.

ES.2 Methods

ES.2.1 Human Health Risk Assessment

In assessing potential human health risks, ENSR followed the four step protocol recommended by the National Research Council (NAS, 1983), as follows:

- Hazard Identification,
- Dose-Response Assessment,
- Exposure Assessment, and
- Risk Characterization.

ES.2.1.1 Hazard Identification: Specifying the Substances to Analyze

The first step in the hazard identification process is to determine the quantity and nature of chemicals potentially released from a source. The next step is to identify those substances whose risk to human health should be assessed. The criteria used for the identification are the toxicity of the constituents, and their persistence and/or mobility in the environment.

For step one, the chemicals considered for inclusion in the CBCP plus package boiler risk assessment were those appraised in the air quality analysis of the CBCP (ENSR, 1993). This list is comprised of five criteria pollutants and 26 other organic and inorganic substances that are included on the Draft Florida Air Toxics list.

Based on the relative toxicity and persistence of these listed substances, ENSR selected 10 metals, the polynuclear aromatic hydrocarbons (PAH), formaldehyde and radionuclides for inclusion in the health risk assessment of the CBCP and package boilers.

The metals were selected because they have relatively high toxicity and are persistent in the environment, allowing for accumulation. Therefore, these inorganic elements have the greatest potential to produce health or ecological risk from combustion sources. PAH, some of which are considered by EPA to be probable carcinogens, were selected based on their toxicity, although they tend to be less persistent than the metals.

Although formaldehyde is not typically found to produce significant risks from fossil fuel combustion sources, this compound was selected because it has been included in an inhalation risk assessment that was part of a draft U.S. EPA Environmental Impact Study (EIS) of the CBCP (Dames and Moore, 1992). Similarly, the draft EIS included radionuclides in its health risk assessment; therefore, ENSR included radionuclides in the present risk assessment.

The same substances were used in the risk assessment of the existing SKC boilers, with two exceptions. First, radionuclides were not analyzed for this source because emissions of these substances are so much lower from oil fired units including the SKC power boilers. Second, chlorinated dioxins and furans were included among the substances analyzed for SKC, because bark burners are reported to emit these compounds (Sassenrath, 1991).

These list of compounds assessed are shown in Table ES-1.

ES.2.1.2 Dose-Response Assessment

The dose-response assessment defines the relationship between the dose or intake of a substance and the likelihood that a health effect (e.g., cancer or other effects) will occur. There are different dose-response relationships defined for exposure by the oral route (e.g., ingestion of soil , fish, or other foods) and for exposure by inhalation. The outcome of the dose-response assessment, when coupled with assumptions regarding the magnitude of human exposure, provides a numerical estimate of potential risk. .

ENSR used cancer dose-response information derived by the U.S. EPA for each of the chemicals assessed that are regarded by EPA as known or probable human carcinogens, with the exception of lead. Lead is considered a probable human carcinogen, but U.S. EPA has yet to develop a cancer dose-response value for this element.

An assumption used by U.S. EPA and other regulatory authorities for compounds with known or potential carcinogenic effects is that there is no threshold for effect. That is, there is some level of risk associated with every dose above zero. The U.S. EPA's Human Health Assessment Group has developed computerized models that extrapolate observed dose-response relationships to the low dose levels encountered in environmental situations. The mathematical models assume no threshold and use human and/or animal dose-response data to develop a potency estimate for a compound. In extrapolating the results of animal experiments to humans, an assumption is made that man is more sensitive to the effects than the experimental animal.[1] The mathematical models assume that carcinogenic dose-response is linear at low doses, and most calculate the 95% upper bound on the range of possible dose-response slopes. This value is known as a cancer slope factor (CSF). The use of these assumptions makes it more likely than not that cancer risk estimated using the CSF overestimates true risk.

[1] The extrapolation is made using the assumption that the toxicity of a compound scales in proportion to the surface area of the organism being exposed. Using the U.S. EPA's method accounts for the possibility that humans may be approximately 5 fold and 13 fold more sensitive than laboratory rats or mice, respectively, to equivalent doses reported on a mg/kg body weight basis.

TABLE ES-1

Chemicals Assessed in the Health Risk Assessment

Antimony
Arsenic
Barium
Beryllium
Cadmium
Chromium (hexavalent)
Lead
Mercury
Nickel
Carcinogenic Polynuclear Aromatic Hydrocarbons (PAH)
Vanadium
Formaldehyde
Total Radionuclides (CBCP only)
Chlorinated dioxins and furans (existing SKC only)

Because of the linearity assumption, simply multiplying the CSF by the estimated dose provides an estimate of extra cancer risk specific to the conditions of exposure.

ENSR used Reference Doses derived by the U.S. EPA to assess the potential effects of substances that are not carcinogenic. For compounds with known or potential effects other than cancer, it is assumed that there exists a dose below which no adverse health effects are likely to occur. This dose is described as a "threshold". An approximation of a threshold dose — the dose at which no effects occur — may be observed in animal experiments or observations in accidentally exposed humans. This dose level is called a No Observed Adverse Effect Level (NOAEL). To account for the uncertainty that such a NOAEL can be applied to a large human population that may contain particularly sensitive individuals, U.S. EPA and other regulatory authorities divide NOAEL values by "uncertainty factors." By applying such uncertainty factors U.S. EPA derives a Reference Dose (RfD) that represents a dose below which it is extremely unlikely that even sensitive subgroups of a population would suffer toxic effects (U.S. EPA, 1991). Less sensitive members of the population would be protected to an even greater extent. To determine the potential impact of a noncarcinogenic chemical, the estimated dose is divided by the RfD to arrive at what U.S. EPA refers to as a "hazard quotient." A hazard quotient of one or less indicates an adequate certainty that a toxic effect will not be observed.

ES.2.1.3 Exposure Assessment

Exposure assessment involves determination of the ways people might be expected to be exposed to source emissions and estimation of the extent of potential human exposure to the chemicals assessed. To accomplish the latter in this risk assessment, "exposure scenarios" were constructed, in which the behaviors of people that promote exposure (e.g., their inhalation rates, frequency of contact with soil, type and amount of food eaten) were quantified to aid in calculating the total exposure to chemicals that might occur.

Ambient air concentrations of chemicals for each potential exposure pathway were modeled using the U.S. EPA model ISC2. In order to conduct such modeling, estimates of the emissions from the CBCP and SKC Package Boilers and the existing SKC boilers were required. These emissions were then subjected to air dispersion and wet and dry deposition modeling. Air dispersion models provided an estimate of ambient air concentrations of the chemicals assessed at locations of interest. The deposition models, which provided estimates of the rate at which chemicals assessed reach the ground surface, were subsequently used to determine the extent to which chemicals enter surface soil, surface water, and foodstuffs (fish and vegetables) that people might consume. This approach is shown schematically in Figure ES-1.

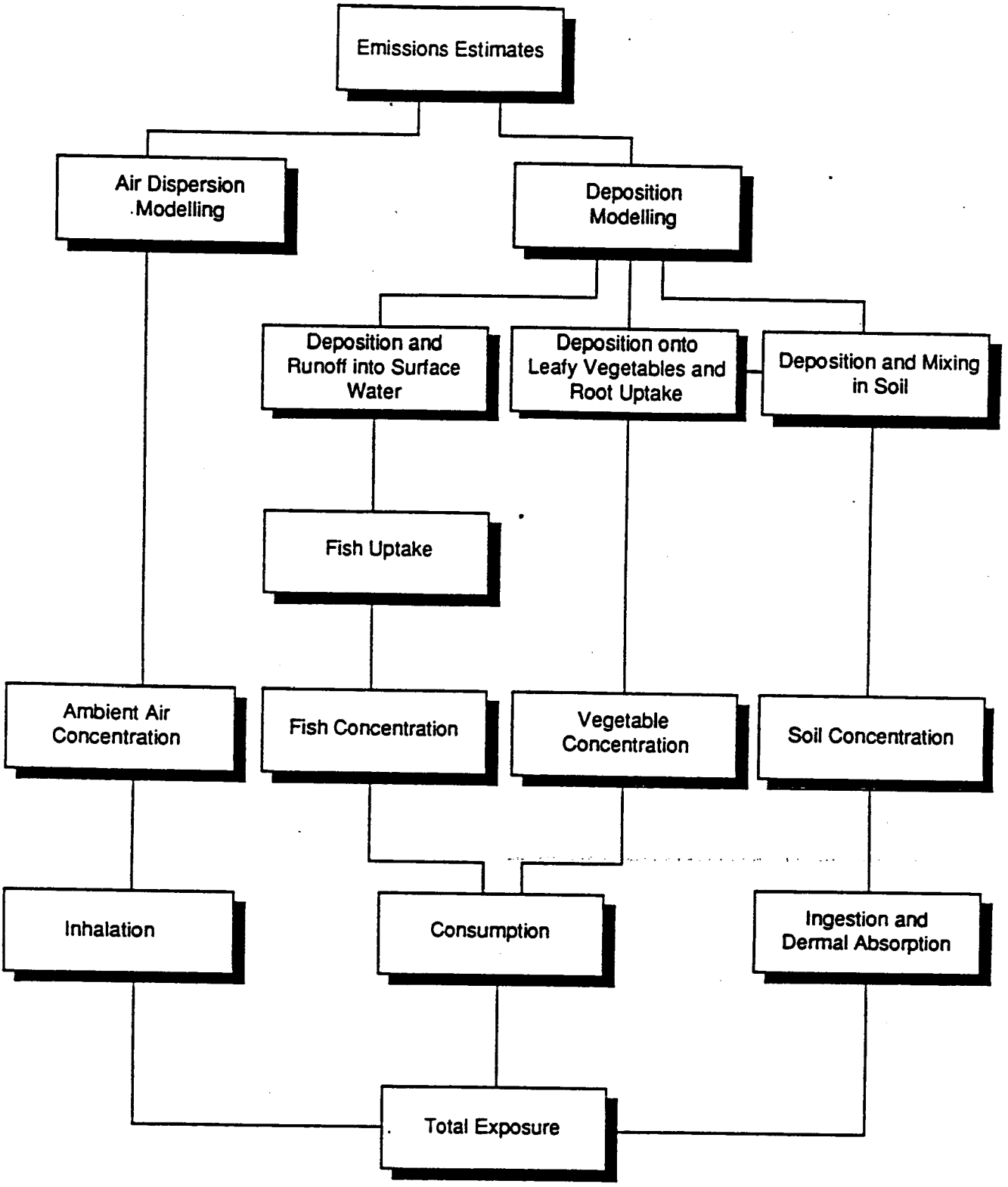

FIGURE ES-1
Exposure Assessment

Exposure to chemicals emitted into the air can occur via both direct and indirect pathways. The direct pathway for chemicals emitted to the air is inhalation of particle-bound and gaseous chemicals. As previously discussed, particulate-bound chemicals will deposit onto land and water surfaces and may distribute from those media to foodstuffs. People may be exposed indirectly by contacting or ingesting deposited materials.

While the direct exposure pathway, inhalation, is relevant to exposure assessment for almost any facility, the indirect pathways are determined by the nature of the area surrounding the facility. In the case of CBCP, potentially exposed individuals in the surrounding area reside in single family houses, suggesting that children may have play areas near their residences. There are a very limited number of commercial vegetable and fruit operations in the County, but the low density of homes in the vicinity of CBCP suggests that it is reasonable to assume backyard gardens exist. Since Jacksonville is a seaboard community and is located on an extensive estuarine river system, consumption of locally caught fish is another pathway of relevance. Therefore, for locations near residences, the applicable and relevant exposure pathways were considered to be:

- inhalation
- inadvertent ingestion of and dermal contact with soil.
- ingestion of home-grown produce; and
- ingestion of fish.

Exposure estimates were made for a hypothetical Reasonably Maximally Exposed individual who, for the purposes of this assessment, was assumed to be located at points in residential or residentially-zoned areas where air dispersion and/or deposition modeling indicated the greatest impact. This approach provided the highest realistic estimate of exposure hence the terminology "Reasonably Maximally Exposed," or RME. Exposures to receptors at other locations were also estimated, to provide perspective on the spatial distribution of potential exposures and the consequent health risks in the area surrounding the facility.

The RME based on maximum ambient air concentrations would reside along August Drive, northwest of the Dames Point and Dames Point Manor areas of Jacksonville. Although there is industrial development in this area, there are also single family residences. Points of maximum deposition occurred in different locations than the points of maximum air concentration, because wet deposition modeling assumptions are less dependent on stack parameters than the dispersion assumptions, making the magnitude of deposition rate essentially a function of distance from the source. Therefore, another RME was selected as being the nearest residential property to the CBCP. This location is at the southern end of Cedar Bay Road, approximately 500 meters to the west northwest of CBCP. Two additional "near residential" locations were selected. One of these

is the Polly Town area of Jacksonville, to the north northeast of the site, and the other is the northernmost portion of Arlington, due south of CBCP.

Potential health risks to sensitive receptors in the area surrounding the facility were also evaluated. Sensitive receptors may include children in playgrounds or schools, the elderly in nursing homes, or the ill in health care facilities such as hospitals. For the present health risk assessment, schools and playgrounds were selected as locations for sensitive receptors surrounding the facility. These included the San Mateo Little League field on Kraft Road, to the north of the site, the San Mateo School, to the northwest, Almadale Christian School, to the west, Panama Park in downtown Jacksonville, and the Fort Caroline School in Arlington.

The locations of these receptors are shown in Figure ES-2.

ES.2.1.4 Risk Characterization

Risk characterization involves estimating the magnitude of the human health risks associated with exposure to the chemicals assessed. In this step, the results of the exposure assessment were combined with the dose-response assessment to estimate the potential risks to human health. This resulted in a quantitative estimate of the likelihood that an individual will experience any adverse health effects given the specific exposure assumptions made. Estimates of health risks were generated for both potential carcinogenic and noncarcinogenic effects associated with each substance assessed. A summary of risks is presented in Section ES.3.

ES.2.2 Ecological Risk Assessment

An ecological risk assessment has also been performed for the two sets of emission sources. The ecological assessment consists of the characterization of the area surrounding the CBCP, the development of a Conceptual Site Model (CSM) to identify the important taxonomic/functional groups of the ecosystem that may utilize ecologically important local habitats, and the identification of critical exposure pathways of potentially emitted chemicals to these taxonomic/functional groups. Based on site-specific information, an aquatic evaluation and a terrestrial evaluation were performed and are presented as separate analyses in Section ES.3.

ES.2.2.1 Conceptual Site Model

The ecosystems surrounding the CBCP contain important terrestrial, aquatic, and riparian habitats (Figure ES-3). Species that are likely to be found there were identified based on site visits and/or published information. Following the habitat and species characterization, chemicals assessed were identified. Finally, the primary exposure pathways for chemicals emitted into the

ENSR

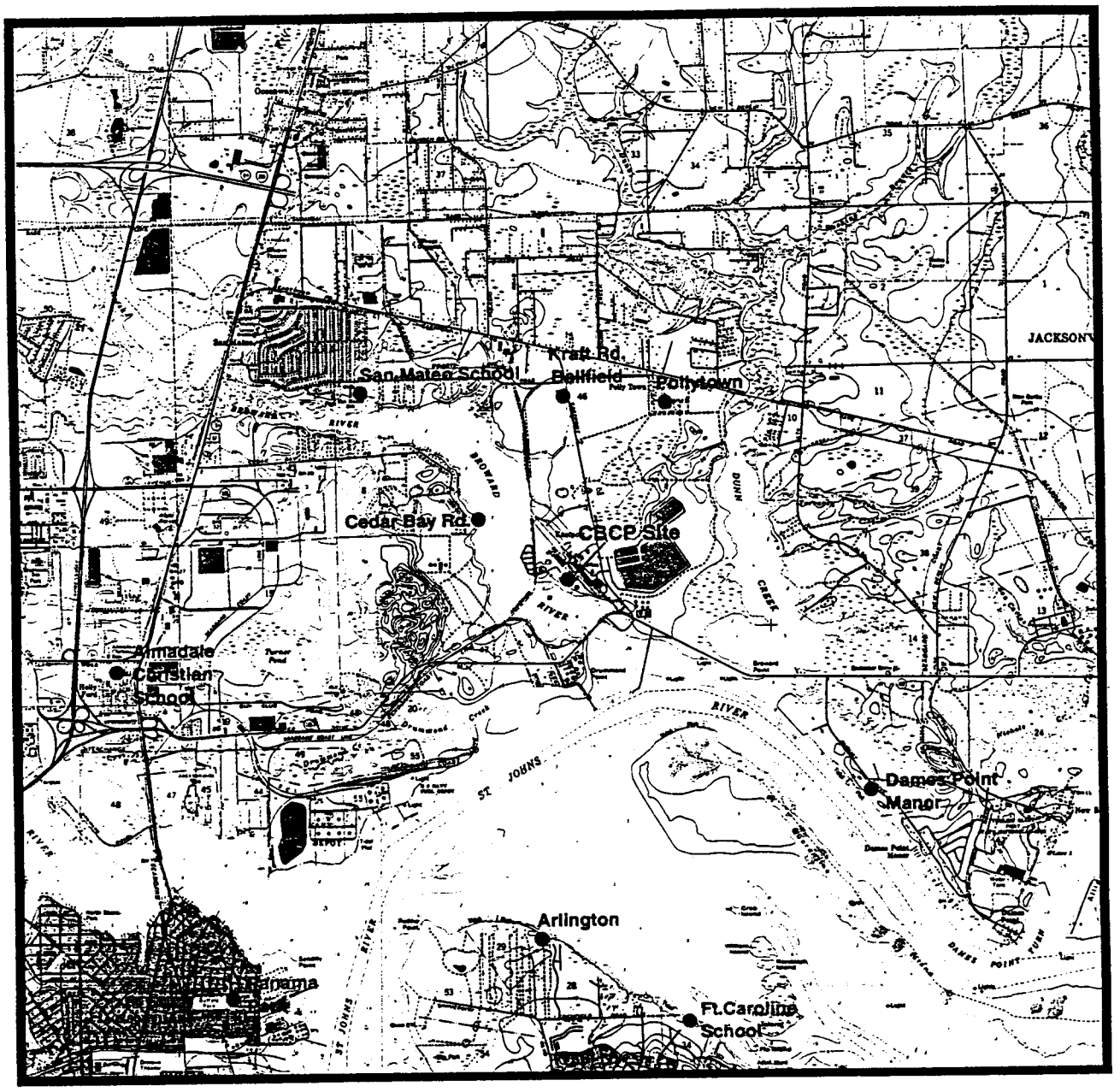

U.S.G.S. 7.5 minute series quadrangle of Jacksonville, Florida

Legend:

- Residential Location
- Parks and Schools

0 .5 1
Scale in Miles
0 .5 1
Scale in Kilometers

ES-2
Receptor Locations

ENSR

N

U.S.G.S. 7.5 minute series quadrangle of Jacksonville, Florida

Legend:

- A Aquatic Habitat
- R Riparian Habitat
- Tw Terrestrial/Habitat (Wooded)
- Tm Terrestrial/Habitat (Wetland or Marsh)

0 .5 1
Scale in Miles
0 .5 1
Scale in Kilometers

ES-3
Ecological Habitat in the Vicinity of the CBCP Site

environment were identified as potential consumption of fish by piscivorous birds and mammals, and consumption of worms by terrestrial mammals.

After identifying the habitat, chemicals, and pathways within a project area, the CSM was used to select "representative" species. Representative species are those which best represent a major taxonomic group within the area or, because of their functional biology, have relatively high potential exposure to chemicals assessed. The snowy egret (Egretta thula), belted kingfisher (Ceryle alcyon), eastern mole (Scalopus aquaticus), and river otter (Lutra canadensis) were chosen as representative species for these habitats.

ES.2.2.2 Dose-Response

In this assessment, dose-response values are taken from federal criteria, when available and when not available are derived from a review of the literature. Ambient Water Quality Criteria (AWQCs) have been derived for both fresh and salt surface waters for many of the chemicals emitted by the CBCP and package boilers and the existing SKC boilers. For those chemicals assessed without AWQCs, the lowest observed effects level for chronic effects found in the literature were used to develop benchmark concentrations. For the mammalian and avian species evaluated in this assessment, the procedure used by the U.S. EPA to derive human oral reference doses is used to develop the oral dose-response values. Much of the available literature has been summarized by the Agency for Toxic Substances and Disease Registry for mammalian species and by the U.S. Fish and Wildlife Service for avian species. These summaries included the laboratory species and studies, and the lowest chronic NOAEL in the summary of literature is considered an appropriate dose-response value.

ES.2.2.3 Mammalian and Avian Exposure Assessment

The assumptions that were used to predict potential exposure of representative species are presented below. For each representative species, exposure pathways are determined and a lifetime average daily dose is calculated using species-specific parameters. All of the representative species are assumed to reside in the vicinity of the CBCP throughout their lifespan. It is further assumed that these representative species obtain all their food (e.g.,fish) and water requirements from the Broward River or from a location of maximum potential deposition from the two sets of emissions sources. Exposure pathways were developed for each of the representative species.

ES.2.2.4 Ecological Risk Characterization

Risk characterization involves estimating the magnitude of the potential for an adverse ecological effect associated with exposure to the chemicals assessed. For the aquatic analysis a comparison of the predicted surface water concentrations in the St. Johns and Broward Rivers was made to federal aquatic marine chronic criteria.

For the analysis of the potential for adverse effects for terrestrial species, ratios are calculated in a manner parallel to the calculation of human hazard quotients. The exposure dose for each individual chemical assessed is divided by the appropriate dose-response value to derive a hazard quotient. The level of ecological concern for noncarcinogenic hazard quotient is defined by the criteria established by the U.S. EPA (1988). Conclusions are expressed as "no concern" if the ratio for each chemical assessed is equal to or less than 0.1; "possible concern" if the ratio falls within the range of 0.1 and 10; and "high concern" if the ratio is equal to or greater than 10.

ES.3 Summary of Results

ES.3.1 Human Health Risk Assessment

Many conservative assumptions were used in the risk assessment steps, including modeling of air, soil, and water concentrations, exposure frequencies, and intake rates for most of the exposure pathways. U.S. EPA dose-response values are derived employing conservative assumptions and are intended to account for sensitive individuals including children on playgrounds. Given this methodology, actual risk levels for the "average" individual are likely to be much lower than those predicted here.

The health risk assessment was conducted for locations where a reasonable maximum exposure (RME) might occur, as well as other locations in the vicinity of the CBCP.

As shown in Table ES-2, the human health risk assessment indicates that all cancer risks associated with exposure to emissions from the two sets of sources are less than 1 in 100,000, risks that U.S. EPA has found to be acceptable in a similar regulatory setting. There was only one location of the 9 analyzed where the cancer risk from the CBCP and package boilers was greater than that for the SKC bark and power boilers. Cancer risks at other locations are 50% or more lower for CBCP plus package boilers than for the existing SKC boilers.

It is apparent from the extra cancer risk levels reported at other locations that the risk decreases with distance from the site or with less intense exposure patterns.

TABLE ES-2

Cancer Risk Comparisons of CBCP and SKC Emissions

Location	Exposures	Cancer Risk (Chances in 100,000)		Difference in Risk CBCP-SKC
		CBCP and Package Boilers	SKC Existing	
Dames Point Manor	Inhalation Soil Foodchain	0.05	0.14	-0.09
Cedar Bay Road	Inhalation Soil Foodchain	0.24	0.16	+0.08
Polly Town	Inhalation Soil Foodchain	0.03	0.1	-0.02
Arlington	Inhalation Soil Foodchain	0.02	0.08	-0.06
Kraft Rd. Ballfield	Inhalation Soil	0.05	0.10	-0.05
San Mateo Elementary School	Inhalation Soil	0.03	0.10	-0.07
Almadale Christian School	Inhalation Soil	0.03	0.09	-0.06
Panama Park	Inhalation Soil	0.03	0.08	-0.05
Ft. Caroline Elementary School	Inhalation Soil	0.01	0.04	-0.03

Neither facility has significant impact on other health outcomes, as measured by comparison to RfDs. As shown in Table ES-3 Hazard Indices were well below one for both sets of emissions sources at all locations. This indicates that it would be extremely unlikely that any toxic effect would result from exposures to chemicals from either facility. The hazard indices for the SKC Bark and Power Boilers are smaller than those for CBCP and package boiler at two locations, but the reverse is true at 5 other locations and at the remaining 2 locations the Hazard Indices were approximately equal.

Thus, overall, neither the existing SKC boilers nor CBCP plus package boilers can be expected to have an impact on the human health of the surrounding community.

ES.3.2 Ecological Risk Assessment

Characterization of potential impacts to aquatic species is performed by comparing predicted incremental concentrations to ambient water quality criteria. For all of the chemicals, the predicted surface water concentrations from emissions of the CBCP and package boilers are less than one percent of the chronic criteria. Indeed, the predicted surface water concentrations of most chemicals range from about one hundredth to less than one ten thousandth of a percent of the criteria. Thus, the predicted surface water concentrations due to emissions of the CBCP and package boilers meet the established chronic criteria by a large margin.

The characterization of potential impacts to terrestrial and avian representative species was performed by computing a hazard quotient (the ratio of the predicted intake in a species to a benchmark intake expected to have minimal effect). The hazard quotients for all the chemicals for all the representative species potentially affected by the CBCP and package boilers are equal to or below 0.1. These ratios are classified by U.S. EPA as "no concern" (U.S. EPA, 1988). This analysis indicates that the representative species will not be adversely impacted by the chemicals assessed emitted by the CBCP and package boilers. Because these representative species are potentially more highly exposed and are used as indicators for the other mammalian and avian species in the area, the analysis indicates no potential for adverse effects exists in those species either.

As with the CBCP and package boilers, the potential affects of all chemicals emitted by the existing SKC bark and power boilers on river otters, snowy egrets and belted kingfishers are classified as "no concern" by the U.S. EPA. In addition, the potential effects of all chemicals, with the exception of vanadium, on eastern moles at two receptor locations, 675 and 901 are also classified as "no concern" by the U.S. EPA. The SKC vanadium emissions are classified as being of "potential concern" for the eastern mole at Receptors 675 and 901. Because of the

TABLE ES-3

Comparisons of Potential Non-Cancer Impacts of CBCP and SKC Emissions

Location	Exposures	Hazard Index		Ratio of CBCP SKC
		CBCP and Package Boilers	SKC Existing	
Dames Point Manor	Inhalation Soil Foodchain	0.02	0.03	0.7
Cedar Bay Road	Inhalation Soil Foodchain	0.1	0.05	2.0
Polly Town	Inhalation Soil Foodchain	0.02	0.02	1.0
Arlington	Inhalation Soil Foodchain	0.02	0.01	2.0
Kraft Rd. Ballfield	Inhalation Soil	0.03	0.03	1.0
San Mateo Elementary School	Inhalation Soil	0.002	0.009	0.2
Almadale Christian School	Inhalation Soil	0.002	0.008	0.3
Panama Park	Inhalation Soil	0.002	0.007	0.3
Ft. Caroline Elementary School	Inhalation Soil	0.0008	0.004	0.2

conservative assumptions used in the risk assessment, it is not likely that the vanadium emitted from existing SKC sources will result in observable adverse ecological affects to the eastern mole.

ES.4 Conclusions

The findings of this risk assessment indicate that operation of the CBCP and package boilers will have a negligible impact on human health. By replacing SKC's bark and power boilers, the CBCP and package boilers may actually provide some net health benefit, because the cancer risks from the CBCP and package boilers are less than those of the SKC facility as it now exists.

The findings of the ecological risk assessment indicate that the CBCP will not pose a potential ecological risk to the aquatic or terrestrial environments. The potential effects of CBCP emission of all the chemicals on all the species examined are classified as "no concern". The vanadium emissions from the existing SKC boilers are classified as being of "potential concern" for the eastern mole at Receptors 675 and 901. Thus, the CBCP and package boilers may be expected to present less ecological risk for the locations, species, and chemicals assumed than the existing SKC boilers.

APPENDIX L

FLORIDA DEPARTMENT OF ENVIRONMENTAL REGULATION CORRESPONDENCE REGARDING LIME MUD COMPOSITION

Florida Department of Environmental Regulation
Twin Towers Office Bldg. • 2600 Blair Stone Road • Tallahassee, Florida 32399-2400
Lawton Chiles, Governor
Carol M. Browner, Secretary

March 28, 1991

Julie Blunden
Development Manager
AES Cedar Bay, Inc.
1001 North 19th Street
Arlington, Virginia 22209

Dear Julie:

Our Hazardous Waste Section has reviewed the supplemental information supplied by you regarding the lime mud deposits at the AES Cedar Bay Cogeneration Project Site in Duval County, Florida. They have concluded that these deposits do not constitute a hazardous waste so long as the water content of the lime mud is less than 50%.

The Department agrees that AES Cedar Bay, Inc. has complied with condition IX of the Conditions of Certification and may relocate the lime mud deposits as described in the SCA and Erosion Sediment Control Plan.

If you have any further questions please contact me.

Sincerely,

Steve Palmer, P.E.
Siting Engineer
Division of Air Resources
Management

SP/ah

L-1

(blank

L-2

APPENDIX M

TIMUCUAN ECOLOGICAL & HISTORIC PRESERVE INFORMATION FROM THE NATIONAL PARK SERVICE'S AGENCY BRIEFING BOOKLET

APPENDIX M

INFORMATION ON THE

TIMUCUAN ECOLOGICAL & HISTORIC PRESERVE

From - the National Park Service's "agency briefing booklet"
October 1991

Note: Only portions of the "agency briefing booklet" dealing with the "Preserve Purpose and Significance" are provided in this Appendix. The cover letter from the National Park Service is provided for context and as a reference. Maps are not easily reproduce-able and so are not provided.

(blank)

M-2

United States Department of the Interior

NATIONAL PARK SERVICE

FORT CAROLINE NATIONAL MEMORIAL
TIMUCUAN ECOLOGICAL & HISTORIC PRESERVE
12713 Fort Caroline Road
JACKSONVILLE, FLORIDA 32225 - 1299

IN REPLY REFER TO:

D18 (TIMU-S)

October 1, 1991

Mr. Greer Tidwell, Regional Administrator
U.S. Environmental Protection Agency
345 Courtland Street, Northeast
Atlanta, Georgia 30365

Dear Mr. Tidwell:

Legislation introduced by Congressman Charles Bennett established Florida's newest National Park unit, the Timucuan Ecological and Historic Preserve on February 16, 1988. Located entirely within the Jacksonville city limits in Duval County, Florida, the preserve encompasses salt and fresh water marshes between the St. Johns and Nassau rivers and includes Fort Caroline National Memorial. The preserve reflects a mosaic of ownership and jurisdictional responsibility encompassing private, local, regional, state and federal levels. The National Park Service (NPS) has identified your agency as having ownership, stewardship and/or jurisdictional responsibilities for resource management within the preserve boundaries.

The NPS has been directed to manage the Timucuan Preserve to protect its natural, cultural, and scenic resources, and, at the same time, to allow for public recreation. A major planning effort is currently underway. The NPS is seeking the cooperation and assistance of other public agencies and individuals to both plan and manage the preserve.

The NPS is required by law to develop a general management plan (GMP) for each unit of the national park system. This plan will address current issues and identify alternatives for their resolution. A draft GMP and environmental impact statement (EIS) is currently being prepared for the Timucuan Preserve. The EIS is a requirement under the National Environmental Policy Act (NEPA) of 1969, Public Law 91-190. Once finalized, these documents will guide future NPS management actions.

The GMP for the Timucuan Preserve is being prepared by an interdisciplinary planning team including myself and my park staff, representatives of the NPS Southeast Regional Office in Atlanta, Georgia, and planners from the NPS planning and design office in Denver, Colorado. In order to develop these long range plans, the NPS requests your participation. We have scheduled a meeting in

M-3

Jacksonville, Florida on November 7, 1991 beginning at 9:30 a.m. and ending at 12:30 p.m. at the Marina Hotel (Commerce/Dockside Room) 1515 Prudential Drive, Jacksonville, Florida 32207, (904) 396-7154, for the purpose of discussing your agency's role in managing the preserve. The agenda for the meeting includes:

- a briefing by the NPS on the planning process to date
- a presentation regarding management needs
- a round table discussion to define each agency's roles and responsibilities in the preserve

Please advise us of your participation and/or that of other staff members by completing and returning the enclosed response form no later than October 31. Should you have questions or need assistance, please call me at (904) 641-7155.

Suzanne Lewis

Suzanne Lewis
Superintendent

Attachment

agency briefing booklet

october 1991

TIMUCUAN

ECOLOGICAL AND HISTORIC PRESERVE

FLORIDA

M-5

CONTENTS

FOUNDATION FOR MANAGEMENT 1
- PRESERVE PURPOSE AND SIGNIFICANCE 1
  - A Vision for Timucuan 1
  - Purpose Statements 2
  - Significance Statements 2
  - Interpretive Themes 3
- PRESERVE EXISTING CONDITIONS 4

INTRODUCTION TO ALTERNATIVES 9
- GIVENS/IMPLICATIONS OF EXISTING CONDITIONS 9
- GOALS FOR ALTERNATIVES 9
  - Natural Resource Management 9
  - Cultural Resource Management 10
  - Visitor Experience 10
  - Recreation 11
- PLANNING NEEDS 11

QUESTIONNAIRE/MATRIX/METHODOLOGY CHART 12

MAPS

Natural Resources 5
Known Cultural Resources 6
Recreational Resources 7
Landownership 8

PRESERVE PURPOSE AND SIGNIFICANCE

A Vision for Timucuan

Timucuan Ecological and Historic Preserve contains some 46,000 acres, most of which are wetlands. The preserve's enabling legislation also identified eight cultural resources worthy of interpretation. All but three of these resources are nonextant, and except for the Zephaniah Kingsley Plantation, most are related to the continuum of fortification of the Lower St. Johns River area.

Historically the lower St. Johns River was a very important resource—the seat of political, military, and religious power of Spanish Florida. This continuum of defense-related activity is evident today with the presence of the U.S. Navy's facility at Mayport.

The historic fortifications of the preserve have little meaning by themselves and must be related to the bigger picture of European, and later American, occupation of Florida and the many struggles to keep it. The story of settlement, economic development, and exploitation (both subsistence and commercial) is intertwined with the story of political, military, and religious life in the region.

Although the 46,000 acres that currently encompass the preserve do not make up the entire wetlands ecosystem of the St. Johns River, their designation by Congress as a preserve, coupled with the recent rise in American consciousness towards preservation and protection of wetlands, makes them a valuable natural resource. Visitors would have opportunities to learn and experience the natural resources of the preserve on their own terms, which will in part help make clear the experiences of those who fought for, and settled, lived, and continue to live there.

Timucuan Ecological and Historical Preserve is two resources worthy of preservation and interpretation—a magnificent and dynamic wetland with its attendant ecosystem, and an area that possesses a significant and important cultural history. Together, these two resources form a fabric that is richer and more diverse than either of its two separate threads. A careful interweaving of these respective components will emphasize the totality of the wetlands/cultural experience and present an informational and educational experience for park visitors.

The area should be managed as the dynamic natural/cultural system that it is. The Timucuan experience should be both water and land based to provide visitors multiple opportunities to enjoy the natural and cultural resources. Providing visitors access by water would allow a better understanding of both the ecology of the wetlands and their past and present human use.

Purpose Statements

The purpose of the Timucuan Ecological and Historic Preserve is to

- Protect, preserve, and interpret the fresh- and salt-water wetlands and upland communities that are encompassed between the St. Johns and Nassau rivers and estuarine system.

- Protect, preserve, and/or interpret the prehistoric and historic sites, features, remnants, and events related to human use and occupation of the St. Johns and Nassau rivers and estuarine system.

- Provide for water- and land-based recreation that sustains natural and cultural resource values.

Significance Statements

The preserve encompasses a magnificent and dynamic wetland with its attendant ecosystem that covers a large, relatively unimpaired area within the Jacksonville city limits. This preserve is a rich and diverse biological community that contains

- an important habitat used by rare and sensitive species such as the bald eagle, Atlantic loggerhead turtle, West Indian manatee, and wood stork

- a remnant of productive salt marsh once prevalent along the Atlantic Coast

- the scarce, undeveloped coastal upland communities, such as the maritime hammocks

- natural vistas and expansive views of and across waterways, salt marshes, and upland communities in an urban setting

The preserve contains representative examples of prehistoric and historic activities spanning a continuum of occupation, European exploration, cultural contact, conflict, fortification, and settlement in a river and estuarine environment. The most significant representations include

- prehistoric sites illustrating some of the oldest and longest periods of human habitation in southeastern United States

- Fort Caroline National Memorial, commemorating the first French-Protestant settlement in the New World

- San Juan del Puerto, a mission representing European attempts to control native American populations

- the Kingsley Plantation, the southernmost example of a sea island plantation

The preserve provides the setting for stories of significant historical interest related to military control of the St. Johns River valley, such as Forts San Gabriel and San Estaban, Fort Dos Hermanas, forts at St. Johns Bluff and Fort George Island, Thomas Creek, St. Johns Bluff Spanish-American War fortification, and Yellow Bluff Fort State Historic Site.

Within the preserve there are vernacular landscapes and structures that exemplify "Old Florida" traditional lifeways, such as fish camps.

The preserve provides a large open area of waterways and uplands for recreational opportunities—e.g, boating, fishing, hiking, bicycling, primitive camping.

Interpretive Themes

At Timucuan there is an opportunity for harmony to exist between human use and natural order. This harmony affects the air and water quality and the overall scenic quality of the area. It involves a balance of human use/abuse regarding development and disturbance. Timucuan is a "living laboratory," where prehistoric, historic, and present use of the wetlands can be evaluated. The interrelationships between nature and human use which contribute to our quality of life can be experienced.

The wetlands are a dynamic ecosystem that provide the interface between land and water. This ecosystem serves as an environmental indicator because it is easily disrupted by pollution or other disturbances. Wetlands provide atmospheric stabilization, erosion and flood control, and groundwater recharge, and remove pollution and toxins from sediments. The wetlands serve as breeding and spawning grounds for fish and birds, including those threatened and endangered species; a wildlife refuge; and a nursery for shellfish. The wetlands also provide a buffer from storms.

The lower St. Johns River has historically been and remains a strategic waterway for access into interior Florida. The river was fortified by several rivals—French and Spanish, British and Americans, Confederates and Union—in attempts to control the interior access. Several military conflicts occurred in the lower St. Johns River system, involving the Spanish and French, and combatants in the American Revolution at Thomas Creek. Physical reminders of the military presence along the river includes military hardware and fortification, in the form of gun emplacements and earthworks. The continuing legacy of the river's military significance is the modern U.S. Navy installation at Mayport.

Various peoples through time have relied on the resources of the lower St. Johns River for basic subsistence. The daily survival of other prehistoric and historic peoples who lived along the river was affected by the available natural resources. Agriculture was practiced in several forms along the river—the Timucuan slash-and-burn techniques and gathering of edible plants gave way to the establishment of formal plantations that were dedicated to the production of specific crops. The river and wetlands offered fishing and shellfish harvesting, conducted by all groups to the modern day—an evolution from the Timucuan midden piles to the present-day Buddy's Fish Camp. The river served as both transportation barrier and access corridor.

(blank)

APPENDIX N

FLORIDA DIVISION OF HISTORIC RESOURCES CORRESPONDENCE REGARDING CULTURAL RESOURCE ASSESSMENT REQUEST

JUN 29 REC'D

FLORIDA DEPARTMENT OF STATE
Jim Smith
Secretary of State
DIVISION OF HISTORICAL RESOURCES
R.A. Gray Building
500 South Bronough
Tallahassee, Florida 32399-0250
Director's Office (904) 488-1480
Telecopier Number (FAX) (904) 488-3353

June 21, 1990

Heinz Mueller
EIS Project Officer
U.S. EPA, Region IV
345 Courtland St., N.E.
Atlanta, Georgia 30365

In Reply Refer To:
Susan M. Henefield-Herring
Historic Sites Specialist
(904) 487-2333
Project File No. 901649

RE: Cultural Resource Assessment Request
EPA/EIS FDER State Analysis Report Draft
Cedar Bay Cogeneration Project, Jacksonville
Duval County, Florida

Dear Mr. Mueller:

In accordance with the procedures contained in 36 C.F.R., Part 800 ("Protection of Historic Properties"), we have reviewed the above referenced project(s) for possible impact to archaeological and historical sites or properties listed, or eligible for listing, in the National Register of Historic Places. The authority for this procedure is the National Historic Preservation Act of 1966 (Public Law 89-665), as amended.

We have reviewed the above referenced draft environmental impact statement and find it to be complete and sufficient. Thus it is the opinion of this agency that project activities will have no effect on any archaeological or historic sites or properties listed, or eligible for listing, in the National Register of Historic Places, or otherwise of national, state, regional, or local significance. The project is consistent with the historic preservation aspects of Florida's coastal zone program, and may proceed without further involvement with this agency.

If you have any questions concerning our comments, please do not hesitate to contact us. Your interest in protecting Florida's archaeological and historic resources is appreciated.

Sincerely,

Lori D. Tesar

for George W. Percy, Director
Division of Historical Resources
and
State Historic Preservation Officer

GWP/smh
cc: Hamilton S. Oven

N-1

(blank)

N-2

APPENDIX O

BASICS OF SOUND AND NOISE

Source: Anon (modified by EPA)

2.2 BASICS OF SOUND AND NOISE

Sound is a complex vibration transmitted through the air that, upon reaching the ears, may be perceived as desirable or unwanted. Noise can be defined simply as unwanted sound or, more specifically, as any sound that is undesirable because it interferes with speech and hearing, is intense enough to damage hearing, or is otherwise annoying (EPA 1978).

The human ear's ability to hear sound depends upon the frequencies present; we hear best the frequencies present in speech, generally 1000 Hz to 4000 Hz, and less well the frequencies outside this range. In order to measure sounds in a way that corresponds to human perception, various weighting factors are applied to the levels of sound in specific frequency intervals and added or subtracted based on the average human response to sounds in that frequency range; the resultant values are then summed to determine the overall "weighted" level. The most commonly used weighting systems are the "A" and "C" scales. The A-scale de-emphasizes primarily the low-frequency portion of the sound spectrum. A-weighting provides a good approximation of the response of the average human ear and correlates well with the average person's judgment of the relative loudness of a noise event. Sound levels using the A-scale frequently are denoted by dB(A); more properly, however, the unit is dB and the context should make it clear that the sound level is A-weighted.

Sound waves propagate away from a noise source and the sound intensity decreases with increasing distance from the source due to the spreading of the sound energy over an increasing area. The sound intensity varies inversely with the square of distance from the source. For each time the distance from the source doubles, the sound pressure is reduced by a factor of two and the sound intensity is reduced by a factor of four. This is equivalent to a decrease of approximately 6 dB in sound pressure level for each doubling of distance (spherical spreading). In addition to spherical spreading, atmospheric absorption and phenomena, such as wind and temperature gradients, also affect the propagation of sound through the air. Sound propagating from sources on or near the ground (such as aircraft ground runups and flight at low altitudes) is also influenced by terrain, vegetation, and structures which may either absorb or reflect sound, depending upon their characteristics, location, and orientation relative to the source (FICON 1992).

2.3 NOISE METRICS

To assess the impacts of sound on a diverse spectrum of receptors, a variety of metrics (quantitative noise measures) may be used. Depending on the specific situation, appropriate metrics may include single event or cumulative metrics. Single event metrics are used to characterize a specific noise event; they do not describe the overall noise environment. Single event metrics are used to assess the potential impacts of sound on structures and may be employed for informational purposes in the assessment of some human effects, such as sleep disturbance and speech interference. Cumulative metrics take into account the sound levels of all individual events that occur during a specified period (e.g., one hour, 24 hours, etc.) and the number of times those events occur. Cumulative metrics are most useful in characterizing the overall noise environment and are the primary metrics used in development of community dose-response relationships. Common metrics used to characterize a single sound event include Maximum A-Weighted Sound Level and Sound Exposure Level.

Maximum A-Weighted Sound Level (L_{max})

The single event maximum sound level metric (L_{max}) is the highest A-weighted sound level measured during an event. It is a useful metric for comparing the loudness of different noise events, and for estimating whether or not an event will interfere with conversation or sleep. At common voice levels and outdoor talking distance (about 1 meter apart), speech interference can be expected when intruding noise levels exceed 60 to 65 dB. Hence, if an event produces an L_{max} above 65 dB at a location of interest (e.g., residence, school room), some difficulty maintaining uninterrupted conversation can be expected.

In general, for single noise events, a difference of 1 dB between maximum levels produced by two sequential single events may not be noticeable to some people; a difference of 3 dB generally will be detectable; a difference of 5 to 7 dB will be easily heard; and an increase of 10 dB is often judged to be a doubling of loudness, just as a decrease of 10 DB is perceived as a halving of loudness.

Sound Exposure Level (SEL)

The maximum A-weighted sound level, or L_{max} can be easily understood in terms of everyday experiences with noise. Slightly more complicated, but in some ways more useful, is the sound exposure level, abbreviated SEL. The L_{max} describes only the loudest level of an event; it does not describe how long the event lasted. Subjective tests indicate that human response to noise is a function not only of the maximum level, but also of the duration of

the event and its variation with respect to time. The SEL is a measure of the physical energy of the noise event which takes into account both intensity and duration. The SEL is based on the integral of the A-weighted sound level during the period it is above a specified threshold (that is at least 10 dB below the maximum value measured during the noise event) with reference to a standardized duration of 1 second.

In general, SEL is higher than L_{max}, because it condenses the total sound energy of an event into a one second interval, as though the whole event occurred in one second. Figure 1 illustrates the relationship between SEL and L_{max}. The usefulness of SEL lies in the ease of translation into other metrics for use in prediction. For example, the computer programs that compute noise exposure around airports base their calculations on SEL data for each aircraft type (EPA 1977).

2.3.2 Cumulative Noise Metrics

Long-term cumulative noise metrics are usually derived from single event metrics or computed from continuous noise measurement data. Cumulative metrics correlate well with aggregate community response to the sound environment. Although cumulative metrics were not designed as single event measures, they use single event data averaged over a specified time period. Thus cumulative measures, like single event measures, can relate to annoyance and to speech and sleep disturbance, although the relationship between cumulative measures and sleep disturbance is not clearly established. Common metrics used to characterize cumulative sound environments include the Equivalent Sound Level and the Day-Night Average Sound Level.

Equivalent Sound Level (L_{eq})

Sound levels vary as time passes. The variations can occur over very short periods or, variations can be longer term. Several methods have been used to quantify time varying noises, but the most common is the Equivalent Sound Level, abbreviated L_{eq}. This sound level accounts for all sounds that occur in a given time period. Briefly, it is the level of a constant A-weighted sound that has exactly the same amount of total sound energy as did the actual time fluctuating sound. L_{eq} is "equivalent" to an actual time varying sound level in the sense that it has the same total energy for the same length of time, only the fluctuations in level have been summed up and "averaged" to yield a constant, steady-state level. Thus, the A-weighted sound level can be used to measure instantaneous sound levels as they occur, or the A-weighted level can be cumulative over a longer time period to yield an equivalent level.

Figure 1: Relationship between SEL and L_{MAX}

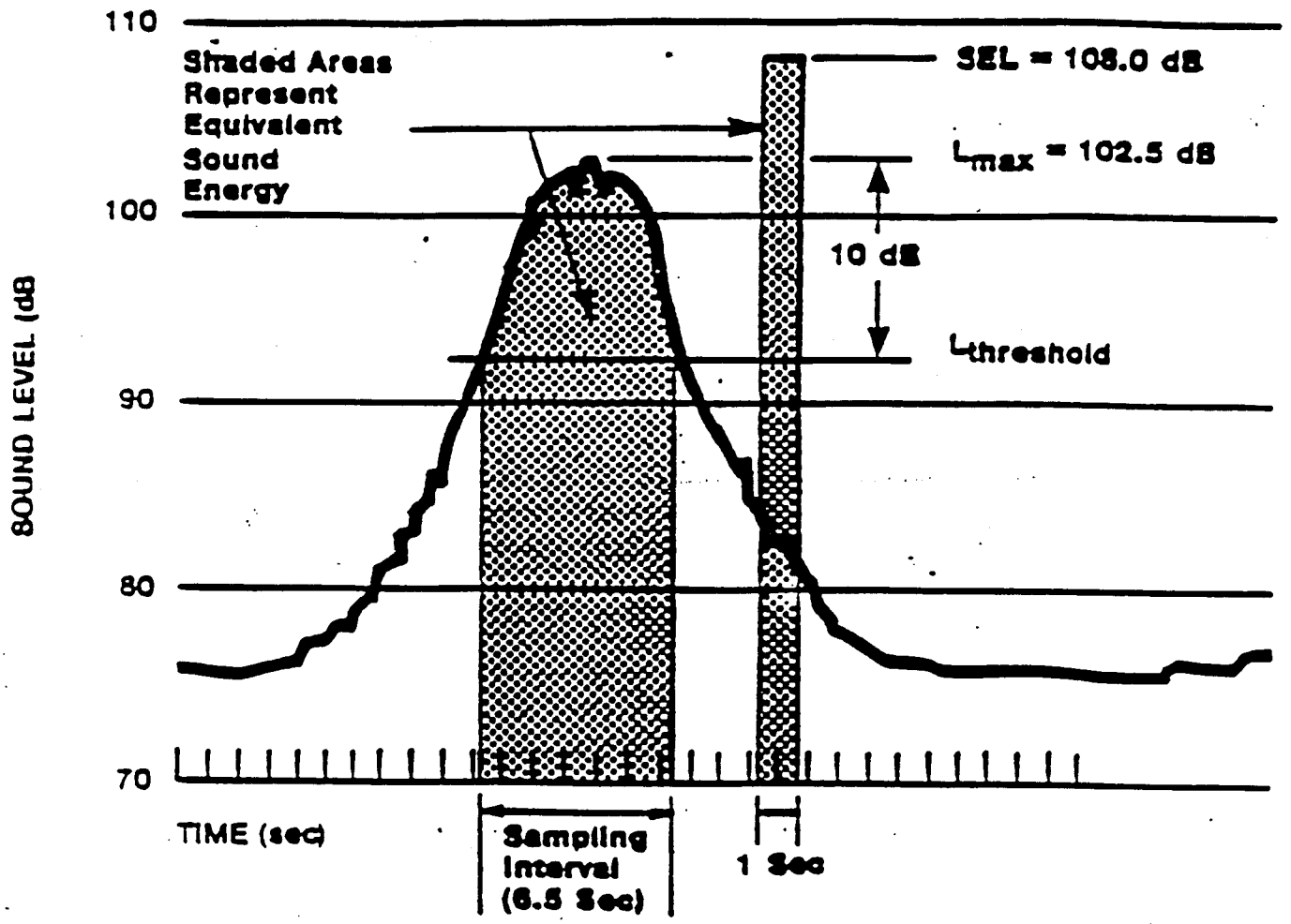

The following examples are provided to illustrate how the L_{eq} cumulative noise metric works. If a single event lasting one second at 90 dB occurs every five or six minutes in a 24-hour period, then the resultant cumulative noise level would be L_{eq} 65 dB. If the sound level of the one-second single events were only 80 dB, the events would have to occur every 34 seconds over the 24-hour period to attain a L_{eq} 65 dB cumulative noise level. If the sound level of the one-second single events were as high as 100 dB occurring every five to six minutes, then the resultant cumulative noise level would be L_{eq} 75 dB.

Day-Night Average Sound Level (DNL or L_{dn})

The Day-Night Average Sound Level (DNL) is the Energy-Average Sound Level (L_{eq}) measured over a period of 24 hours, with a 10 dB penalty applied to nighttime (10:00pm to 7:00am) sound levels to account for increased annoyance by sound during the night hours.

The DNL was selected by the EPA as the uniform descriptor of cumulative sound exposure to correlate with health and welfare effects. Subsequently, all Federal agencies adopted yearly average DNL as the basis for describing community noise exposure. DNL takes into account the sound levels of all individual events that occur during a 24 hour period, and the number of times those events occur. The averaging of sound over a 24 hour period does not ignore the louder single events, and it actually tends to emphasize both the sound level and number of those events. Although the logarithmic nature of the dB unit causes sound levels of the loudest events to control the 24 hour average, DNL is still much lower in value than the maximum sound level (L_{max}) of individual events. DNL is considered a superior metric in accounting for variations in the noise environment including such factors as numbers of events, loudness of individual events, and percentage of night events.

Annoyance

Annoyance is a summary measure of the general adverse reaction of people to noise that generates speech interference (including inability to use the telephone, radio, television or recordings satisfactorily) or sleep disturbance, or simply interferes with the desire for a tranquil environment. Community response is a term used to describe the annoyance of groups of people exposed to environmental noise sources in residential settings. Case histories and social surveys indicate that the response of a community to aircraft noise is affected not only by how loud the noise is, but also by how often noise events occur (i.e., the total noise exposure in a specified time period). Currently, the best

available measure of this response is the percentage of the area population characterized as "highly annoyed" (%HA) by long-term exposure to noise of a specified level (expressed in terms of DNL). Schultz developed an equation for describing the relationship between the level of exposure (in DNL) and %HA, and the graphic representation of this dose-effect relationship is often referred to as the "Schultz curve" (see Figure 2).

The relationship between DNL and %HA is an invaluable aid in assessing community response since it relates the response to increases in both sound intensity and frequency of occurrence. EPA proposed %HA as the appropriate impact criterion to use for evaluating the effects of noise on communities (EPA 1982). Although the predicted annoyance, in terms of absolute levels, may vary among different communities, the Schultz curve can reliably indicate changes in level of annoyance for defined ranges of sound exposure for any given community.

Interference with Speech and Communication

Whenever intrusive noise exceeds approximately 60 dB indoors, there will be interference with speech communication. This interference may result from masking of the speaker's words or by causing the speaker to pause. Increasing the indoor level of intrusive noise to 80 dB reduces intelligibility to near zero, even if a loud voice is used. Based on the average levels of noise reduction (attenuation) provided by typical residential construction (15 dB with windows open and 25 dB with windows closed), some degree of indoor speech interference would be expected whenever exterior noise levels exceed 75 dB to 85 dB (windows open and closed, respectively).

Sleep Disturbance

The effects of noise on sleep have long been a concern of parties interested in assessing residential noise environments. Many laboratory studies were conducted during the 1970's on sleep disturbance and awakening caused by noise.

The 10-dB nighttime "penalty" added to noise levels for the period 10:00pm to 7:00am in computing DNL is intended to account for the intrusiveness of noise at night, partly due to the lower nighttime ambient, and therefore tends to reflect to some extent the potential for wakeups. However, in some circumstances, such as an unusual number of nighttime noise events, supplemental analysis (using SEL or L_{max}) to indicate sleep disturbance is desirable. Figure 3 presents sleep disturbance (% awakenings) relative to exposure to single event noise levels.

Fig. 2: Interference with Speech & Communication

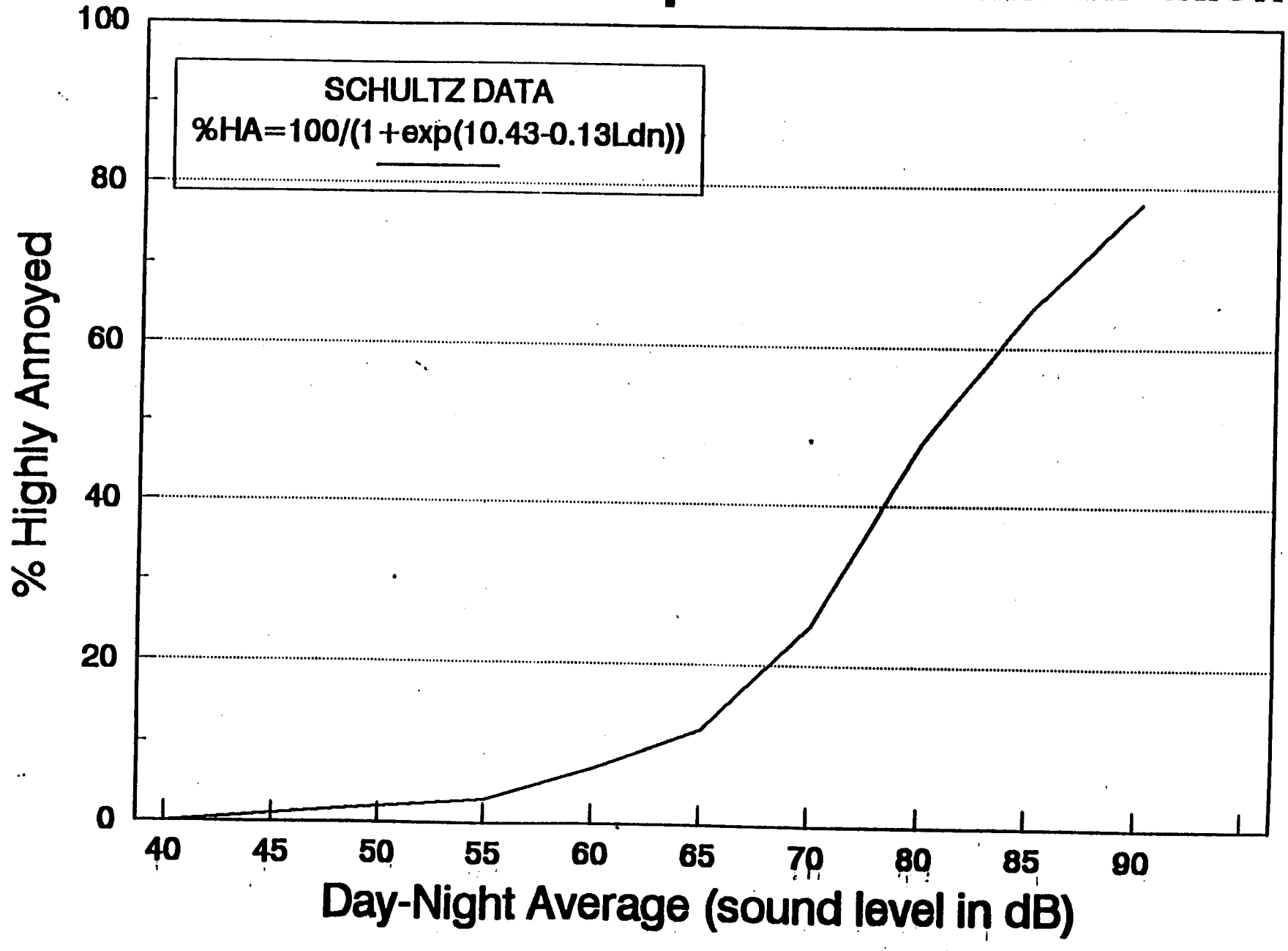

L-0

Figure 3: Sleep disturbance relative to exposure to single event noise levels.

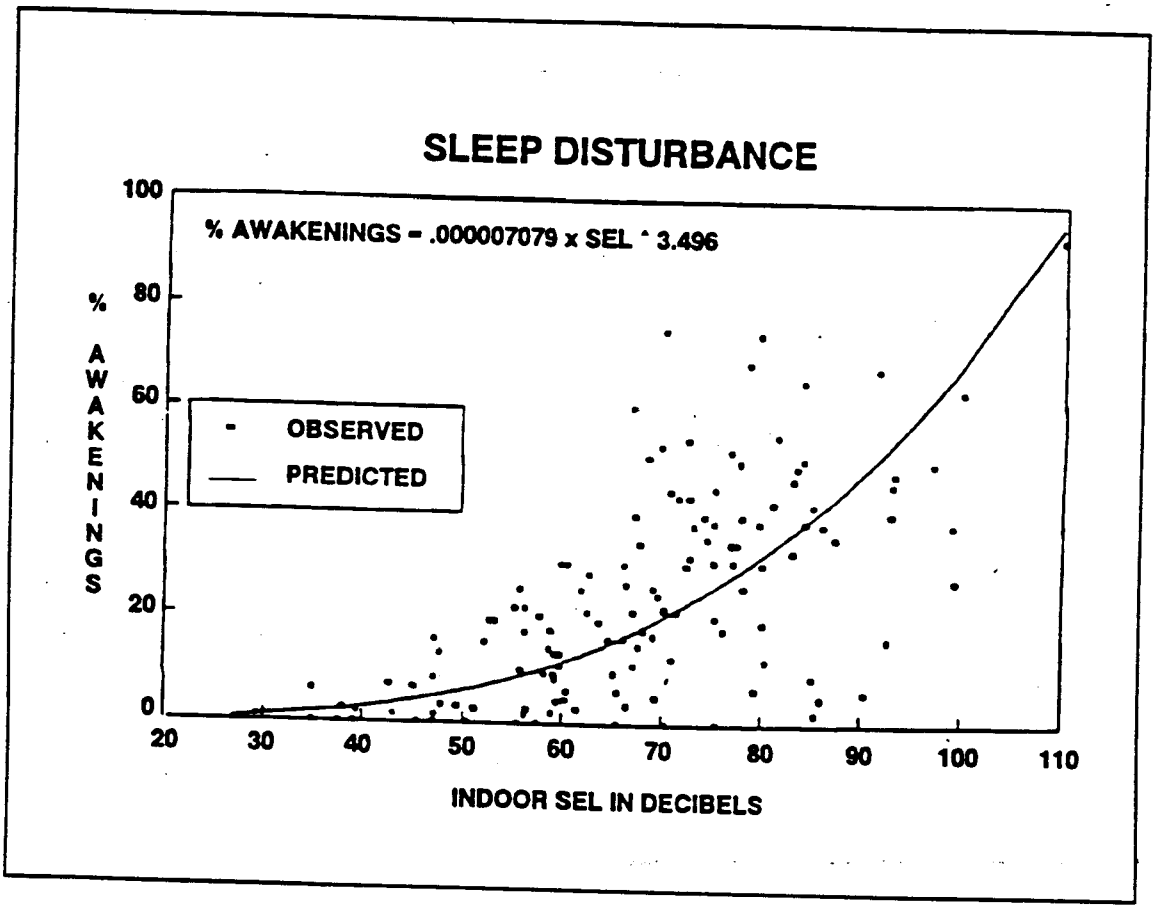

Source: Finegold et al. 1992 IN: FICON 1992.

2.4.3 Nonauditory Health Effects of Noise

Alleged nonauditory health consequences of noise exposure that have been studied include birth defects, low birth weight, mental problems, cancer, stroke, hypertension, sudden cardiac death, myocardial infarction, and cardiac arrhythmias. Of these, hypertension is the most biologically plausible effect of noise exposure. Noise appears to elicit many of the same biochemical and physiological reactions, including temporary elevation of blood pressure, as do many other everyday stressors. These temporary increases in blood pressure are believed to lead to a gradual resetting of the body's blood pressure control system. Some researchers hypothesize that over a period of years, permanent hypertension may develop (Peterson et al., 1984).

Most studies which have controlled for multiple factors have shown no, or a very weak, association between noise exposure and nonauditory health effects. The current state of technical knowledge cannot support inference of a causal or consistent relationship, or a quantitative dose-response model, between residential noise exposure and health consequences. Thus, no technical means are available for predicting nonauditory health effects of noise exposure. This conclusion cannot be construed as evidence of no effect of residential noise exposure on nonauditory health. Current findings, taken in sum, indicate that further rigorous studies are needed.

2.5.1 Noise Exposure and Noise Impact

Before discussing noise impact criteria, the distinction between noise exposure and noise impact should be clarified. DNL and other metrics are used to describe noise exposure levels; and similarly, DNL contours graphically illustrate cumulative noise exposure. Noise impact, on the other hand, can only be assessed by relating noise exposure levels to noise-sensitive receptors (i.e., residences, churches, schools, campgrounds, amphitheaters, etc.). In other words, noise impact describes the effect that noise exposure levels have upon noise-sensitive receptors at a given location.

2.5.2 Threshold Criteria for Change in Noise Exposure (Relative Impact)

DNL noise exposure contours are used to show the cumulative noise exposure produced by a noise source. Comparing noise contours for two different analysis cases such as noise contours resulting from the proposed action and the No-Build cases, it is possible to identify those areas that would experience a change in noise exposure. When the change in noise exposure is considered in relation to noise-sensitive receptors located within the contours, it may be referred to as relative impact.

The threshold criterion for relative impact is a 1.5 dB change over any noise-sensitive area located within the DNL 65 dB contour. The threshold criteria of a 1.5 dB increase was derived from predicted annoyance using the Schultz curve (discussed previously). The Schultz curve can reliably indicate changes in level of annoyance for defined ranges of sound exposure for any given community. The Schultz curve shows that an increase of 5 dB at DNL 55 dB, 3 dB at DNL 60 dB, and 1.5 dB at DNL 65 dB all result in a three percent increase in %HA, since the gradient of the Schultz curve decreases with decreasing DNL values (refer to Figure 2). Therefore, as threshold criteria for change in noise exposure, a 3 dB change at DNL 60 dB and a 1.5 dB change at DNL 65 dB are consistent.

EPA supports using %HA as an appropriate impact criterion to use for evaluating the effects of noise on communities (EPA 1982).

Assessing relative impact can be useful in the comparison of project alternatives. If the merits of two alternatives are relatively similar, the tie-breaker between alternatives should be based upon a comparison of %HA and the number of persons impacted.

2.5.3 Land Use Compatibility Exposure Criteria

Impacts occur when noise produced by a project exceeds a specified threshold level at the location of noise-sensitive land uses. Thresholds of noise exposure levels are established as a guide for determining compatibility with various land uses. In most cases, land use compatibility recommendations regarding noise are in the form of guidelines provided by Federal agencies to State and local communities. In general, land use compatibility guidelines are expressed in terms of DNL and include (1) identification of compatible and incompatible land uses on the basis of DNL in 5 dB increments beginning at or below 65 dB, and (2) recommendations for building design and construction methods necessary to achieve specified levels of noise attenuation (reduction) based on the outdoor DNL.

For local agency decisions, Federal guidelines do not constitute definite thresholds of unacceptable exposure, since local agencies determine the application of the guidelines taking into consideration economic, technical, and political ramifications specific to the communities involved.

The FICUN Guidelines (1980) provide a summary table of Land Use Applications and Compatibilities for this purpose. In general, these guidelines have been broadly accepted; however, there is a need for selective updating to include new types of land use and the need for improved public understanding of the guidelines.

(blank)

REFERENCES

Federal Interagency Committee on Noise (FICON). 1992. Federal Agency Review of Selected Airport Noise Analysis Issues. August 21, 1992. U.S. Air Force, EPA, FAA.

Federal Interagency Committee on Urban Noise (FICUN). 1980. Guidelines for Considering Noise in Land Use Planning and Control. (U.S. Government Office Report # 1981-337-066/8071) Washington, D.C.: FICUN.

Peterson, E.A., J.S. Augenstein, and C.L. Hazelton. 1984. Some Cardiovascular Effects of Noise. Journal of Auditory Research. 24: 35-62.

U.S. Environmental Protection Agency (EPA). 1977. Calculation of Day/Night LDN Resulting from Civil Aircraft Operations. EPA 550/9-77-450.

U.S. Environmental Protection Agency (EPA). 1978. Noise: A Health Problem. August 1978.

U.S. Environmental Protection Agency (EPA). 1982. Guidelines for Noise Impact Analysis. EPA-550/9-82-105. Springfield VA: National Technical Information Service (PB82-219205). [As modified by EPA internal memorandum of 1992.]

(blank)

APPENDIX P

GOPHER TORTOISE RELOCATION REPORT

APPENDIX P

GOPHER TORTOISE RELOCATION REPORT

Prepared by CZR Incorporated
December 8, 1992

Note: Photos do not reproduce well and are not included.

(blank)

P-2

CEDAR BAY COGENERATION PLANT

GOPHER TORTOISE RELOCATION REPORT

December 8, 1992

Prepared for:
U.S. Generating Company
7475 Wisconsin Avenue
Betheseda, MD 20814

Prepared by:
CZR Incorporated
4494 Southside Boulevard
Jacksonville, FL 32216

P-3

TABLE OF CONTENTS

		PAGE
1.0	INTRODUCTION	1
2.0	DONOR SITE DESCRIPTION	6
3.0	RECIPIENT SITE DESCRIPTION	8
4.0	MANAGEMENT PLAN	9
5.0	CONCLUSION	9
6.0	LITERATURE CITED	11

Attachment A

Attachment B

Attachment C

Attachment D

Attachment E

LIST OF FIGURES

FIGURE	DESCRIPTION	PAGE
Figure 1	Location Map of Donor and Preserve Sites	2
Figure 2	Gopher Tortoise Burrow Survey Procedure	3
Figure 3	Gopher Tortoise Scute Notching Procedure	5
Figure 4	USDA Soils Map of Donor and Preserve Area	7

LIST OF ATTACHMENTS

Attachment A	Aerial Photographs Depicting Gopher Tortoise Burrow Locations on Donor Site
Attachment B	Photographs of Gopher Tortoise Relocation
Attachment C	Gopher Tortoise Data Sheets
Attachment D	Photographs of Gopher Tortoise Habitat on Donor Site
Attachment E	Photographs of Gopher Tortoise Habitat on Preserve Site

1.0 INTRODUCTION

In order to allow transportation of large equipment needed for construction of the Cedar Bay Cogeneration Plant, U.S. Generating Company is constructing a railroad spur. The railroad spur was designed to minimize environmental impacts. However, impacts to a limited amount of gopher tortoise (*Gopherus polyphemus*) habitat were unavoidable.

The railroad spur corridor (donor site) was surveyed for the presence of gopher tortoise burrows and evidence of other species of special concern. Gopher tortoise burrows were found on-site, and the possibility existed that the Florida mouse (*Peromyscus floridanus*), Florida gopher frog (*Rana aereolata aesopus*), and the Eastern indigo snake (*Drymarchon corais couperi*) may also occur. Protection of these species was proposed through live-capture and relocation of these animals to an on-site preserve (Figure 1).

CZR Incorporated utilized Generic Gopher Tortoise Permit No. WR92093 to relocate nine gopher tortoises which were within the railroad spur boundaries. These tortoises were relocated in November 1992 to a preserve on-site where no future development is planned.

Included in this report are descriptions of the donor and recipient sites, burrow survey results, burrow location maps, methodology for capture and transfer of protected animals, management plan, and monitoring and reporting plans.

Gopher Tortoise Burrow Survey

Thorough surveys of the suitable gopher tortoise habitat within the railroad corridor were conducted on November 4, 1992 in order to locate all active and inactive burrows which would be impacted by the railroad construction. Parallel transects were established 15 meters apart starting at the edge of each area of suitable habitat. Within the 15 meter transect, biologists walked transects 3 to 5 meters apart in a simulated "S" pattern (Figure 2). Burrows were marked with orange surveyor tape if active and with white if inactive. The locations of the burrows and their status were mapped on an aerial photograph (Attachment A).

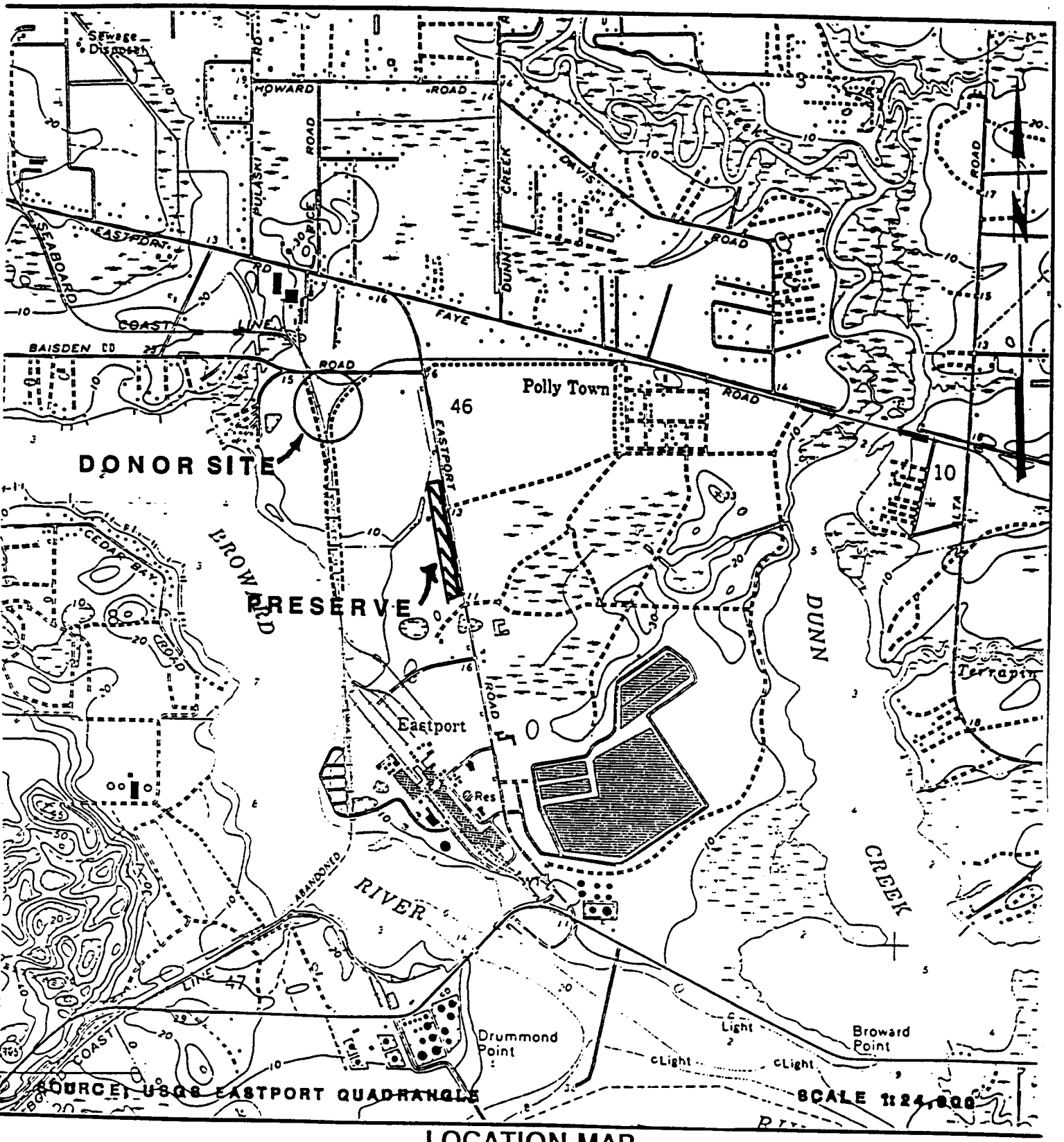

LOCATION MAP

CEDAR BAY
COGENERATION PLANT

CP 1281 FIGURE 1 DECEMBER 1992

CZR INCORPORATED
4494 Southside Blvd.
Suite 200
Jacksonville, Florida 32216

P-8

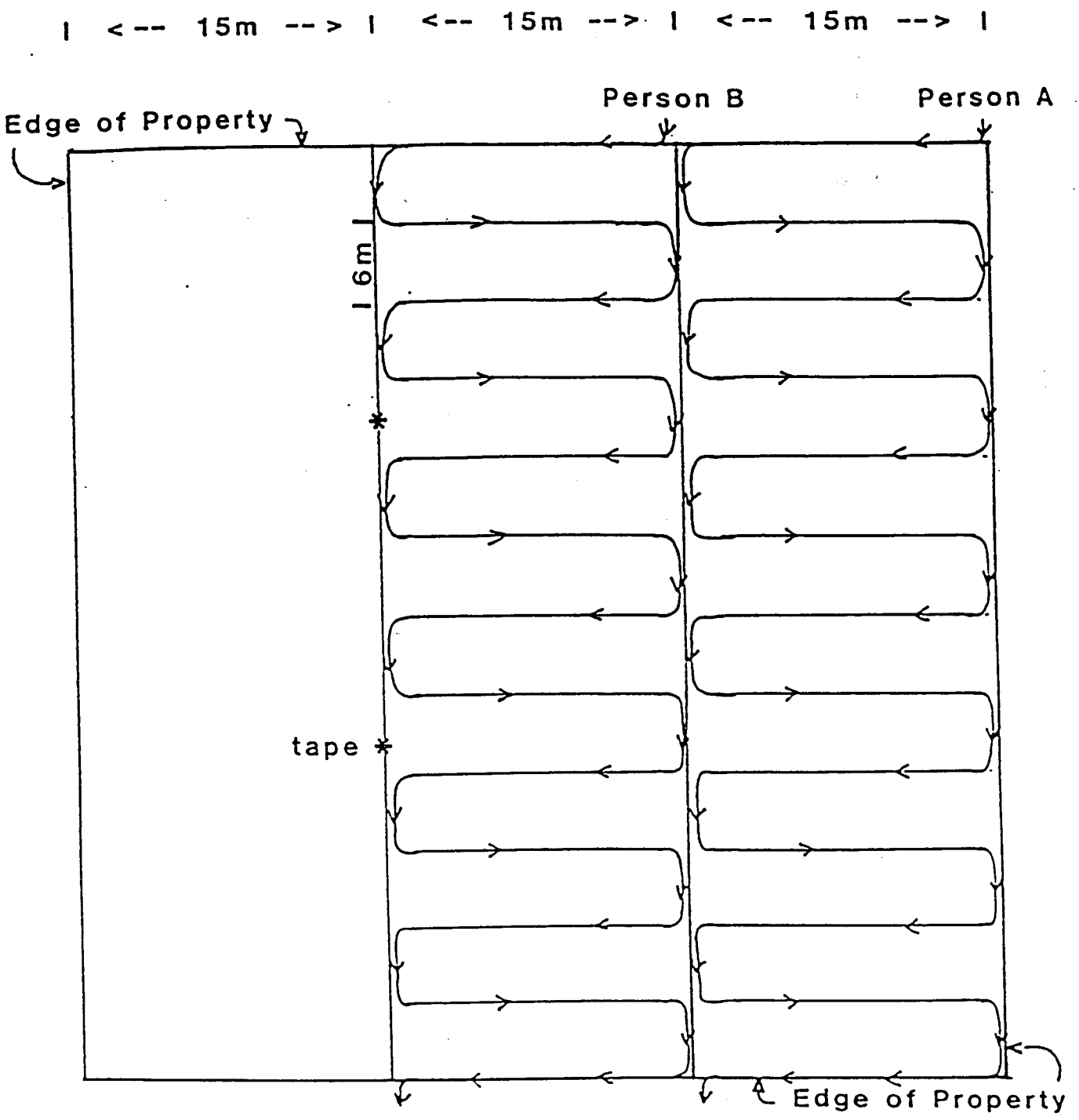

STANDARD GOPHER TORTOISE SURVEY PROCEDURE

CEDAR BAY COGENERATION PLANT
GOPHER TORTOISE RELOCATION PROJECT

CP 1281 FIGURE 2 DECEMBER 1992

CZR INCORPORATED
4494 Southside Blvd.
Suite 200
Jacksonville, Florida 32216

The November 1992 survey yielded 10 active and 11 inactive burrows (Attachment A). To determine the number of tortoises per burrow, Auffenberg and Franz (1982) suggest using a ratio of 0.614 tortoises per number of active and inactive burrows. However, results of previous excavations have found this conversion factor to be too high (CZR 1991, CZR 1989, and Breininger, et.al.). An average of the valid conversion factors from previous results was taken, and a realistic conversion factor of 0.50 was developed. Using this conversion factor with the above survey results yielded the following prediction:

21 (active burrows + inactive burrows) x 0.50 g.t./burrow =
10.5 g.t. to occur on donor site

Research has found that under optimal conditions, habitats can support viable gopher tortoise populations at a density of 2.2 tortoises per acre (Cox, Inkley and Kautz, 1987). Thus, a minimum of 4.7 acres (0.45 acre/g.t. x 10.5 g.t.) of optimal habitat is required to support the predicted tortoise population. U.S. Generating Company selected 6.0 acres of habitat on the site as a preserve (Figure 1).

Methodology and Disposition

Gopher tortoises were excavated from active and inactive burrows by backhoe and shovel, to within four feet of the burrow's end. Excavation of the last four feet was completed by shovel and hand (Attachment B). A bucket trap was set at one burrow which could not be excavated.

Captured gopher tortoises were transported to the preserve/recipient site under shaded and sanitary conditions. Marking of the tortoises followed the FGFWFC (1988) "Guidelines for Gopher Tortoise Relocation" (Figure 3, Attachment C).

Gopher Tortoise Marking

Each tortoise will be permanently marked by drilling hole(s) in one or a combination of the scutes. Each scute is assigned a numerical value as per the scheme illustrated below. The scheme is additive – tortoise number 12 would require the drilling of the number 10 scute and the number 2 scute.

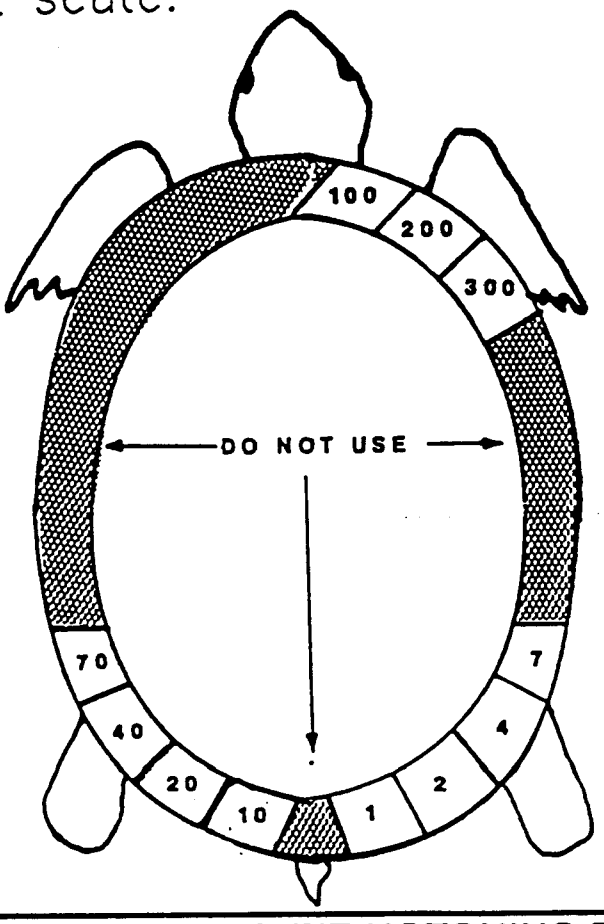

GOPHER TORTOISE SCUTE NOTCHING PROCEDURE

CEDAR BAY COGENERATION PLANT
GOPHER TORTOISE RELOCATION PROJECT

CP 1281 FIGURE 3 DECEMBER 1992

CZR INCORPORATED
4494 Southside Blvd.
Suite 200
Jacksonville, Florida 32216

p-11

2.0 DONOR SITE DESCRIPTION

The railroad corridor is located south of Baisden (Kraft) Road and west of Eastport Road in Duval County, Florida (Figure 1). The soil which occurs within this area is Alpin fine sand, 0 to 8 percent slopes, and Pottsburg fine sand (Figure 5). Alpin fine sand is nearly level to sloping, and is excessively drained soil on broad upland ridges. The water table, under normal conditions, is at a depth of more than 72. This soil has a very rapid permeability rate and low fertility. Pottsburg fine sand is a nearly level, somewhat poorly drained soil. The water table is at a depth of 6" to 12" for two-four months and 12" to 40" for six to nine months. (USDA 1978).

Based upon burrow survey results, gopher tortoises were located in two areas along the railroad corridor. Within these areas, two basic habitats occur: laurel oak (*Quercus laurifolia*) and scrub oak (*Quercus* spp.); and open field with no canopy cover. The groundcover within the laurel oak habitat consists primarily of saw palmetto (*Serenoa repens*), wiregrass (*Aristida stricta*), blackberry (*Rubus* sp.), greenbrier (*Smilax laurifolia*), and pawpaw (*Asimina reticulata*). The open field is dominated by wiregrass, broom sedge (*Andropogon* spp.), blackberry, lupine (*Lupinus* sp.), milkweed (*Ascelpias humistrata*), dog fennel (*Eupatorium* sp.), and prickly pear cactus (*Opuntia* sp.) (Attachment D).

Wildlife known to occur on the donor site include the gopher tortoise, raccoon (*Procyon lotor*), armadillo (*Dasypus novemcinctus*), whitetail deer (*Odocoileus hemionus*), six-lined racerunner (*Cnemidophorus sexlineatus*), ground skink (*Leiolopisma laterale*), green anole (*Anolis carolinensis*), bluejay (*Cyanocitta cristata*), mockingbird (*Mimus polyglottus*), Carolina wren (*Troglodytes carolinensis*), and white-eyed vireo (*Vireo griseus*).

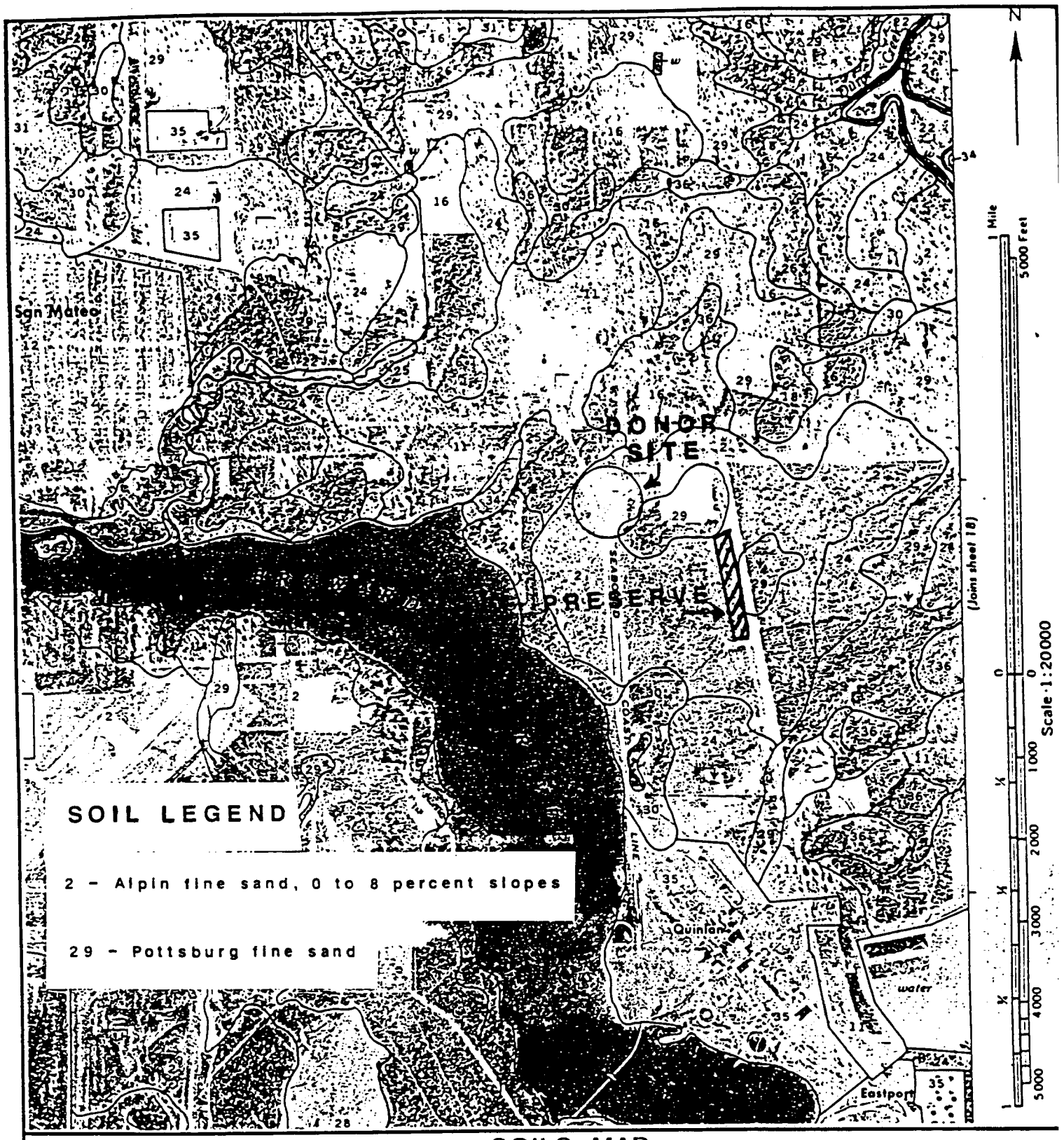

SOILS MAP

CEDAR BAY
COGENERATION PLANT

CZR INCORPORATED
4494 Southside Blvd.
Suite 200
Jacksonville, Florida 32216

CP 1281 FIGURE 4 DECEMBER 1992

p-13

3.0 RECIPIENT SITE DESCRIPTION

A parcel west of Eastport Road was selected as the recipient site and preserve for the gopher tortoises impacted by the proposed railroad (Figure 1). The preserve is composed of turkey and scrub oak habitats. Seminole Kraft maintains a fence along this property boundary which would inhibit gopher tortoises from wandering off of the relocation area.

The 6.0 acre preserve is optimal habitat with an average of 75% canopy cover. Groundcover is approximately 85% and will provide plenty of food for the relocated tortoises (Attachment E). Habitat suitability and the presence of abandoned burrows, suggests this area to be a desirable relocation site.

Soils on the preserve are mapped as Alpin fine sand with 0 to 8 percent slopes and Pottsburg fine sand (Figure 4). These sand classifications are identical to those found on the donor site and will provide similar functions.

The preserve includes two basic habitat types. The predominant habitat has a canopy (75% cover) of turkey oak and long leaf pine. The groundcover averages 85% and consists primarily of wiregrass, pawpaw, highbush blueberry (*Vaccinium corymbosum*), stinging nettle (*Cnidoscolus stimulosus*), butterfly pea, and stargrasses. This community has scattered open areas vegetated with wiregrass, tar flower (*Befaria racemosa*), broom sedge, lupine, and bracken fern (*Pteridium aquilinium*).

Armadillo and raccoon tracks were found on-site. The birds observed include tufted titmice (*Parus bicolor*), mockingbirds, fish crows, grackles, black vultures (*Coragyps atratus*), and cardinals. Numerous six-lined racerunners were seen scurrying among the leaf litter.

4.0 MANAGEMENT PLAN

The general requirements for suitable gopher tortoise habitat are: 1) well drained, sandy soils which allow easy burrowing; 2) diverse and abundant groundcover; and 3) open canopy which allows sunlight to reach the ground (Diemer, 1986; Auffenberg and Franz, 1982). All of the above conditions are present on the recipient site. However, we suggest controlled burns every five years to increase the diversity and abundance of vegetation. Because the site is also directly adjacent to Eastport Road, it will be necessary to maintain the fencing to decrease the chance of roadway mortalities.

5.0 CONCLUSION

The gopher tortoise relocation project on the Cedar Bay Cogeneration railroad spur successfully and safely cleared the area of tortoises. A total of 21 gopher tortoises burrows were excavated. Nineteen burrows were excavated by backhoe, shovel, and hands. One burrow was partially excavated with a backhoe and then observed for thirty-days. This burrow was inactive during thirty-days when other tortoises were active and, therefore, was determined to be abandoned. One burrow disturbed fitted with a bucket trap because it was too close to the railroad tracks to excavate. A five-gallon plastic bucket was sunk at the burrow's mouth and monitored three times a day for four days.

Nine gopher tortoises were relocated from the railroad spur boundaries. These nine tortoises included two females, four males, and three juveniles. The largest tortoise with the longest burrow was a 5 kg (10.5 lbs) female. This tortoise was 29.6 cm (11.65") long and 22.2 cm (8.74") wide with a burrow 7.13m (23.5') long and 2.59m (8.5') deep. The tortoise burrows excavated varied from less than 1m to 7.13m long and less than 1m to 2.59m deep.

Juvenile tortoises are too young to determine their gender. One juvenile was found walking across a spoil pile, and not in a burrow. Because it was impossible to determine where the tortoise came from, we relocated it to the preserve. All of the juveniles were released into abandoned burrows and showed no hesitation in accepting the new burrow.

The only difficulty encountered during relocation involved an adult female with a minor carapace crack. This female was found buried in the spoil area at the edge of the excavated burrow. She had a three inch crack along the back of the carapace, but otherwise was unharmed. To guarantee her safety, this tortoise was transported to the Jacksonville Zoo for examination by Dr. Douglas Page, DVM. The crack was cleaned, treated with antibiotics, and then filled with epoxy. Because the weather was below 50°F at night, the tortoise was held at the zoo for fifteen days. During the first period of 70-75°F weather, the tortoise was released onto the preserve into an abandoned burrow.

The remaining five adult tortoises were also relocated on the preserve. Some of the tortoises accepted abandoned burrows, others utilized starter burrows dug by CZR biologists. Because a cool weather front moved through the area two days after relocation, the tortoises were inactive and remained within the preserve.

As of November 23, no gopher tortoises had moved back into the railroad spur corridor. Although the cooler weather will most likely keep the tortoises inactive, we would recommend that a burrow survey be completed within a week prior to railroad construction. There are additional tortoise burrows adjacent to the proposed corridor. If the spur alignment is altered, it will be necessary to survey the new areas for burrows.

6.0 LITERATURE CITED

Auffenberg, W. and R. Franz. 1982. The Status and Distribution of the Gopher Tortoise (*Gopherus polyphemus*). Pg. 95-126 in R.B. Bury (ed.) North American Tortoises: Conservation and Ecology. USDI, Fish and Wildlife Service. Res. Rep. 12. 126 pp.

Breininger, D., A. Schmalzer, D. Rydene, and R. Hinkle. Burrow and Habitat Study of the Gopher Tortoise in Scrub and Flatwood Habitat Types. Final Project Report, Project No. GFC-94-016, Nongame Wildlife Program, Florida Game and Fresh Water Fish Commission. Tallahassee, FL.

Cox, J., D. Inkley, and R. Kautz. December 1987. "Ecology and Habitat Protection Needs of Gopher Tortoise (*Gopherus polyphemus*) Populations Found on Lands Slated for Large-scale Development in Florida." Florida Game and Fresh Water Fish Commission. Nongame Wildlife Program Technical Report No. 4.

CZR Incorporated. July 1991. University of North Florida Gopher Tortoise Relocation.

CZR Incorporated. June 1989. Palm Beach County School Board Site GGG Gopher Tortoise Relocation Plan.

Diemer, J.E. 1986. The Ecology and Management of the Gopher Tortoise in the Southeastern United States. Herpetologica 43:125-133.

U.S. Department of Agriculture. 1978. Duval County Soil Survey, Florida. Washington, D.C.

ATTACHMENT A

Photos not included

APPENDIX Q

RESOLUTION OF UNRESOLVED ISSUES FROM THE DRAFT EIS/SAR

RESOLUTION OF "UNRESOLVED ISSUES" FROM DRAFT EIS/SAR

In the Draft EIS/SAR, six issues were listed as "unresolved issues." Subsequent to Draft EIS/SAR publication, these issues were resolved through project design changes and/or new information provided by the applicant. Issues are addressed as follows:

"Air Quality - It is unclear at this time whether SNCR should represent BACT for the AES-CB boilers. Therefore, it is important that all available information concerning the proposed level of BACT and the SNCR alternative be submitted by AES-CB prior to the issuance of the Final EIS. This information should include, among other things, a comparative analysis between the AES-CB boilers and other CFB's which have been required to install SNCR. This analysis should document any differences in energy, environmental, or economic concerns, between the facilities so that a final BACT recommendation can be made."

- **The CBCP will employ SNCR for NOx control.**

"Erosion and Sediment Control Plan - Revisions to the Erosion and Sediment Control Plan submitted by AES-CB will be necessary before it is consistent with requirements of Part III.D of the draft NPDES permit and can be considered an acceptable Plan. Specific concerns include: absence of inspection, monitoring and reporting requirements; potential runoff from the lime mud storage area; potential runoff from unusable material which is to be stockpiled on the north end on the SK site; and apparently inadequate size of the Yard Area Runoff Pond."

- **AES-CB submitted an acceptable Plan before construction.**

"SK Conversion to Recycled Paperboard - SK is planning to convert their facilities to accommodate recycled paperboard, replacing wood as a raw material in their operations. SK conversion to recycled paperboard will significantly reduce the SK waste flow and will change the characteristics of the combined SK/CBCP effluent from that which has presently been provided in the SCA. Re-evaluation of the waste flow is needed in the Final EIS. In addition, it is unclear whether or not wood wastes will be burned at CBCP after conversion to recycled paperboard. This could affect air quality evaluations. Clarification is needed in the Final EIS."

- **SK waste flow characteristics have been re-evaluated in this Final EIS. Wood waste will not be burned in the CBCP boilers, but fiber rejects from the SK recycle operation will be burned if feasible. Air quality impacts have been evaluated in this Final EIS.**

"Toxicity of CBCP Waste Stream - Some agreement will have to be established between AES-CB and SK as to how resolution of future toxicity problems will be effected, should they occur, if

CBCP wastes discharged into the SK system prove to be more toxic than presently anticipated and result in the SK effluent being acutely toxic. Present evaluation indicates that additional treatment and/or dilution in the SK treatment system may render the combined waste not acutely toxic. However, the SK manufacturing process is being modified and dilution flow will decrease in the future. SK is (and will remain) subject to toxicity monitoring of the total effluent exiting its treatment system. In addition, facilities at SK (some of which may have been operation for 10 to 20 years of more) may be approaching useful life expectancy. EPA has no assurance that SK will be in operation over the useful lifetime of the CBCP. Assurances on these points prior to the Final EIS issuance are desirable."

- **As the CBCP has been redesigned to be a "zero-discharge" facility, it will add no discharges to the SK system. SK has updated the mill to a recycle facility. Water system characteristics are evaluated in this Final EIS.**

"Waste Effluent Treatment Systems - Details on treatment systems proposed for dewatering wastes and metal cleaning wastes (both chemical and nonchemical) have not been provided by AES-CB and therefore cannot be evaluated to determine if adequate treatment can be provided to meet NPDES requirements. A thorough description of these treatment systems is needed prior to Final EIS issuance."

- **Dewatering was eliminated from project design. Metal cleaning wastes will not be discharged. Water treatment systems are evaluated in this Final EIS.**

"Groundwater - SJRWMD required AES-CB to use the USGS groundwater flow and transport models to perform a hydrologic investigation to determine the impacts of the proposed withdrawals on existing legal users and the impacts to the groundwater resources itself. Concerns related to the limitations of this modeling effort include the following: 1) large grid size used may have masked significant localized effects; 2) normal faults neglected in the model could possibly, on a smaller scale, allow chloride contamination to increase in the upper water bearing zone; 3) apparently existing pumpage rates were used rather than full permitted pumpage rates for the existing permitted uses; and 4) assumption of constant head boundary conditions could bias the piezometric head in the upper water bearing zone. It is recommended that sensitivity analyses be conducted to evaluate the effects of these concerns. Results of these analyses need to be included in the Final EIS. In addition, if estimates of anticipated future applications for groundwater withdrawals are available, it is recommended that this information be included in the analysis described above."

- **Project redesign has substantially reduced groundwater withdrawals.**