EPA-600/4-87-016

EPA/600/4-87/016
May 1988

SURVEY OF VENDORS OF EXTERNAL PETROLEUM LEAK MONITORING DEVICES FOR USE WITH UNDERGROUND STORAGE TANKS

by

B. Eklund
and
W. Crow
Radian Corporation
Austin, Texas 78766

Contract No. 68-02-3994

Project Officer

J. Jeffrey van Ee
U.S. Environmental Protection Agency
Environmental Monitoring Systems Laboratory
Las Vegas, Nevada 89114

ENVIRONMENTAL MONITORING SYSTEMS LABORATORY
OFFICE OF RESEARCH AND DEVELOPMENT
U.S. ENVIRONMENTAL PROTECTION AGENCY
LAS VEGAS, NEVADA 89114

Contents

Section		Page
	Executive Summary	v
1	Introduction	1-1
	1.1 Background	1-1
	1.2 Program Objectives	1-2
	1.3 Scope of Work and Report Outline	1-2
	1.4 Overview of Leak Detection and Tank System Design	1-2
	1.4.1 Leak Detection	1-2
	1.4.2 Tank System Design	1-3
2	Conclusions and Summary of Results	
	2.1 Conclusions	2-1
	2.2 Summary of Results	2-1
	2.2.1 Summary of General Findings for Monitoring Systems	2-1
	2.2.2 Summary of Findings for Intermittent Liquid-Phase Detectors	2-1
	2.2.3 Summary of Findings for Continuous Liquid-Phase Detectors	2-1
	2.2.4 Summary of Findings for Intermittent Gas-Phase Detectors	2-2
	2.2.5 Summary of Findings for Continuous Gas-Phase Detectors	2-2
3	Technical Approach	
	3.1 Literature Search	3-1
	3.2 Vendor List	3-1
	3.3 Vendor Survey	3-1
4	Results	
	4.1 Discussion of Survey	4-1
	4.2 Tabulated Results From Survey	4-1
	4.2.1 Principle of Operation	4-1
	4.2.2 Other Results	4-12
	4.3 Evaluation of Results	4-12
	4.3.1 Performance Categories of Leak Monitoring Techniques	4-12
	4.3.2 Site-Specific Factors	4-23
	4.4 Discussion of Results	4-23
	4.4.1 Overall Results	4-23
	4.4.2 Questionnaire Results	4-26
5	References	5-1
6	Bibliography	
	6.1 Selected Bibliography	6-1
	6.2 Additional Citations Identified in Literature Search	6-2
Appendix A - List of Vendors		A-1
Appendix B - Questionnaire Format		B-1
Appendix C - Tabulated Survey Results		C-1
G	Glossary of Terms	G-1

Tables

Number		Page
1	Characteristics of Leak Detection Sensors	vii
4-1	List of Vendors and Response to Survey	4-2
4-2	Commercially Available Leak Monitoring Techniques	4-5
4-3	Detection Specificities of Various Leak Monitoring Techniques	4-14
4-4	Detection Capabilities of Various Leak Monitoring Techniques	4-15
4-5	Experience of Various Leak Monitoring Techniques	4-17
4-6	Costs for Various Leak Monitoring Techniques	4-19
4-7	Recommended Procedures for Various Leak Monitoring Techniques	4-20
4-8	Effect of Site-Specific Factors and Design Options on Selection of Leak Detection Methods	4-24
4-9	Relative Advantages/Disadvantages of Leak Monitoring Techniques	4-25
4-10	Summary of Available Test Procedures and Results for Leak Monitors	4-27

Figures

Number		Page
1-1	Elements of an Underground Storage Tank Installation	1-4
1-2	Example of Observation Well Installation	1-5
1-3	Example of Vapor Monitoring Well	1-6
4-1	Bailer Used for Grab Sampling	4-5
4-2	Schematic of a Radiation Infrared (IR) Detector	4-6
4-3	Schematic of a Photoionization Detector (PID)	4-6
4-4	Schematic of Leak Monitoring System Using Product-Soluble Pressurized Tube	4-7
4-5	Schematic of Mechanically Activated, Product-Soluble Device	4-9
4-6	Schematic of Electrically Activated, Product-Soluble Device	4-10
4-7	Schematic of Electrical Resistivity Sensor Coated With Product-Soluble Polymer	4-11
4-8	Schematic of Typical Installations of Thermal Conductivity Sensor	4-12
4-9	Schematic of Product-Permeable Device	4-13
4-10	Decision Tree for Detector Classification	4-23

Executive Summary

Underground storage tanks (USTs) and their associated piping are major potential sources of environmental contamination. Since the 1984 Amendments to the Resource Conservation and Recovery Act (RCRA) require regulation of underground storage tank systems, the U.S. Environmental Protection Agency (EPA) is currently investigating topics related to USTs to aid in developing regulations. EPA has contracted with the Radian Corporation to compile information on the various types of external (out-of-tank) monitoring systems or techniques which can be used to detect leaks or spills of petroleum hydrocarbon products. The compiled data were used to categorize external petroleum leak monitoring devices or techniques by function and type, and the data will aid in the future development of performance criteria for commercially available external leak monitoring methods. The present study was conducted in 1986 and is limited to external (outside-the-tank) petroleum leak monitoring devices. It supports the EPA effort by providing information on the number, type, and performance capabilities of available leak monitors.

The literature was searched to collect general information on external petroleum leak monitors and, more specifically, to develop a list of vendors. Additional information was collected from equipment vendors, trade groups, and other researchers. A questionnaire soliciting information on leak monitoring devices was developed and sent to the identified vendors. The questionnaire covered six topics: principle of operation, detection specificity, detection capability, experience, cost, and recommended procedures. The vendor list included vendors of UST monitoring systems and detectors that could potentially be used for the detection of petroleum hydrocarbon leaks or spills. It should be noted that this survey does not necessarily represent a complete list of vendors that manufacture external monitors for detecting petroleum leaks or spills from underground storage tanks and piping. Some vendors were likely to have been inadvertently omitted, and devices that are currently being marketed could have changed since this survey was performed. However, these data will be useful in identifying the different categories of commercial leak monitoring devices and aiding in the development of performance criteria for each monitoring category. This report summarizes and tabulates vendor responses to the questionnaire. The report also includes a discussion of related issues that remain to be resolved before final performance criteria can be established.

The data collection approach used in this study has limitations. Reliance on vendor-supplied data was necessary because of a lack of published, objective evaluative test results. However, since these vendor data have not been independently verified, it is possible that some of these data are erroneous, biased, or self-serving.

The literature search yielded relatively little useful information on external leak detection monitoring devices. The vendor survey, however, was successful in gaining information from approximately 70 percent of the vendors that were queried. Except for a notable lack of data regarding any common interference, operational, or maintenance problems, vendor responses were generally thorough.

A total of 49 vendors was identified that manufacture devices related to the out-of-tank measurement of petroleum hydrocarbon spills or leaks from UST installations. Vendor specifications were received for 63 of 69 (91 percent) different products. Survey forms were completed by 30 of the 42 vendors that were queried. Survey forms were received for 44 of the 62 (71 percent) devices covered by the survey.

Vendor responses provided a basis for dividing the external (out-of-tank) leak monitoring devices for UST systems into four categories: intermittent liquid-phase detection, intermittent gas-phase detection, continuous liquid-phase detection, and continuous gas-phase detection. An examination of vendor survey data yielded the following information:

- Commercial external (out-of-tank) leak monitors are designed primarily to detect leaks or spills of petroleum hydrocarbons;
- Most leak monitoring systems cannot immediately distinguish between surface spills and leaks;
- Most leak monitoring devices do not measure leak rates, although some devices (gaseous detectors) are capable of measuring hydrocarbon concentrations;

- o No uniform performance specifications exist for external leak monitoring devices;
- o Most leak monitoring systems require the installation of observation wells or boreholes;
- o Vendor responses were limited with regard to:
  - Operational problems,
  - Interferences,
  - Maintenance problems, and
  - Performance testing procedures;
- o Most leak monitoring systems can be retrofitted at existing UST installations;
- o Intermittent monitoring techniques are more labor-intensive than continuous techniques, but may be more reliable;
- o Gas-phase detection can be more sensitive than liquid-phase alarms and subject to interferences;
- o Equipment and installation costs (for permanent external leak detection systems) may vary considerably, as these costs are dependent on the type of devices selected and the number of sensors used in each installation, local construction codes and permitting costs, and local labor costs; and
- o Operational and maintenance costs for permanent external leak monitoring systems may also vary, but are thought to be low, on the basis of information obtained from equipment vendors.

The performance characteristics for each leak detection category are summarized in Table 1. The data presented in Table 1 are based on information obtained from vendors and have not been verified by independent testing; therefore, these data may be biased.

Table 1
Characteristics of Leak Detection Sensors*

	Leak Detection Category			
	Intermittent Liquid-Phase	**Continuous Liquid-Phase**	**Intermittent Gas-Phase**	**Continuous Gas-Phase**
Type of Compounds Detected	Liquid hydrocarbons	Vapor/liquid hydrocarbons	Hydrocarbon vapors	Hydrocarbon vapors
Detection Adjustable for Specific Compounds	Generally not	Generally not	Varies between techniques	Generally not
Potential Interferences	None	Physical and chemical	Chemical	Chemical
Severity of Interferences	Low	Variable	Potentially high	Potentially high
False Positives or Negatives	Unlikely	Unlikely	Both possible	Both possible
Temperature Range	>0°C	-45 to 120°C	-20 to 60°C	-70 to 70°C
Can Systems Be Retrofitted?	Yes	Yes	Yes	Yes
Are Wells Required?	Yes	Usually	Usually	Usually
Can Devices Be Used in Wet Soils?	Yes	Yes	Yes	Yes
Years on Market	>5	0-15	2-10	0-20
Detection Limits				
Lower	1/64 to 1/32 in.	1/32 to 1/8 in.	0.1 to 1500 ppm	10 to 100 ppm
Upper	None	None	2000 ppm to 100% LEL**	1% to 100% LEL**
Response Characteristics				
Lag Time	N/A	1 sec. to 10 hr.	1 sec.	1 sec. to 10 min.
Rise Time	N/A	1 sec to 60 sec.	3 sec. to 30 sec.	1 sec. to 20 sec.
Fall Time	N/A	1 sec. to ?	5 sec. to ?	20 sec. to several minutes
Drift	N/A	N/A	Negligible to <1%/day full scale	Negligible to <1%/day full scale
Precision	N/A	Unknown	5% to unknown	5% to unknown

*NOTE: The information presented in this table is based on information provided by vendors of monitoring devices and not on actual performance data which has been independently verified.
**LEL = Lower Explosive Limit

SECTION 1
Introduction

1.1 Background

Underground storage tanks (USTs) and their associated piping represent a major potential source of environmental contamination. If not detected, leaks of stored petroleum hydrocarbons can migrate through the soil and can contaminate ground-water supplies. Petroleum product leaks can accumulate underground and can result in an explosion or in exposure hazards that are due to the migration of volatile organic vapors through the soil into basements, sewers, and utility vaults. Of the estimated 3 to 5 million underground hazardous substance storage tanks currently in the United States, 1.4 million are used to store gasoline[1,2]. As many as one-quarter of the underground (steel) storage tank systems (tanks and piping) may be leaking[3]. More than 95% of all tank leaks are caused by the corrosion of steel components, with tanks over 10 years old being the most susceptible to corrosion[4]. Leaks in piping are commonly due to one of several factors, including corrosion, faulty installation, accidents, and environmental stresses (such as frost heaves). The problem is particularly acute because most underground tank systems are made of unprotected steel and are an average of 12 years old. Several major oil companies have sought to minimize environmental effects from leaking underground storage tanks by systematically replacing existing tanks and piping with new corrosion-resistant fiberglass or fiberglass-reinforced plastic (FRP) systems, FRP-clad steel tanks, or with coated and cathodically protected steel tanks. However, the large number of tanks in existence, as well as several well-publicized leaks, has prompted Congress to include the regulation of underground storage tanks under the Resource Conservation and Recovery Act (RCRA).

Subtitle I of the 1984 Hazardous and Solid Waste Amendments to RCRA requires that the U.S. Environmental Protection Agency (EPA) establish a comprehensive program for the regulation of new and existing underground storage tanks. Specifically, this law requires that federal and state regulatory programs include "requirements for maintaining a leak detection system, an inventory control system together with tank testing, or a comparable system or method designed to identify releases in a manner consistent with the protection of human health and the environment"[6]. The law covers underground storage tanks holding all substances regulated under the Comprehensive Environmental Response, Compensation, and Liability Act (CERCLA) as well as petroleum products (except for hazardous waste storage tanks already regulated under Subtitle C of RCRA).

The U.S. EPA has established the Office of Underground Storage Tanks to oversee the regulatory effort for controlling UST system leaks. The EPA has initiated work to estimate the number of tank systems currently leaking, to evaluate tank and piping integrity (tightness) tests and other inside-the-tank leak detection methods, and to evaluate out-of-tank leak monitoring methods. The Environmental Monitoring Systems Laboratory (EMSL) of the U.S. EPA in Las Vegas is responsible for developing the technical background necessary for developing regulations for leak monitoring. A project team consisting of several contractors assembled by EPA-EMSL will perform a number of functions including: collection and evaluation of user and vendor data, determination of typical background soil contamination levels, and examination of transport mechanisms for vapor and liquid pollutants.

Radian Corporation, under EPA Contract No. 68-02-3994, is assisting EPA-EMSL in developing performance criteria and certification procedures for commercially available external petroleum leak monitoring methods. This document reports the findings from a survey of vendors of out-of-tank leak monitors using a standardized questionnaire. The information compiled on the number, type, and performance capabilities of available leak monitors may be used later to establish performance standards and certification procedures.

1.2 Program Objectives

The primary objectives of the Phase I study were to:

- o Classify out-of-tank leak detection sensors for petroleum hydrocarbons by function and type and establish performance categories for each classification group of leak detection devices;

- Identify ranges for performance categories applicable to each classification of petroleum hydrocarbon leak detection by using vendor-supplied data; and

- Provide input to future development of procedures for certifying the performance of petroleum hydrocarbons out-of-tank leak detection sensors.

This document serves as a background reference on external leak monitoring. It is **not** a guidance manual for selecting an external leak monitoring device for UST systems. Rather it attempts to provide an introduction to the topic and to give an underground storage tank owner the necessary background to ask pertinent questions, seek more information, and assist the owner in making an informed choice.

1.3 Scope of Work and Report Outline

To meet the objectives of this study, a four-step program was performed. First, a literature search was conducted to identify relevant sources. From these sources, a list of vendors was developed. The third step involved developing and mailing out questionnaires to identified vendors to solicit information on leak monitoring devices. The fourth step involved collecting and evaluating these data and reporting the findings. Although an attempt was made to identify and communicate with as many vendors as possible, the resultant vendor list was not all-inclusive. Furthermore, no attempt was made to verify the claims made by the manufacturers or to limit the survey to "proven" UST leak monitors.

Conclusions and a summary of results are presented in Section 2. Section 3 provides a discussion of pertinent issues such as network design and data analysis. The technical approach is described in more detail in Section 4. Section 5 presents the results of the Phase I work. Section 6 lists the references cited, and Section 7 contains a bibliography. Supporting data are given in the appendices. Appendix A lists the products, technical representatives, telephone numbers, and addresses of the particular vendors. Appendix B contains a copy of the vendor survey questionnaire.

1.4 Overview of Leak Detection and Tank System Design

The following discussion provides a brief overview of underground storage tank systems and practices. It is intended for individuals unfamiliar with these topics. Readers are encouraged to consult the publications listed in the bibliography in Section 6 for more information. When leak detection devices are chosen for a given underground installation, it is important to consider site-specific factors and the equipment chosen for each system component. The following discussion provides background information about the generic types of equipment available for underground storage tank systems.

1.4.1 Leak Detection

A variety of programs can be followed to detect leaks or spills from underground storage tanks and piping including: inventory control, tank and line integrity testing, and leak monitoring. Leak monitoring includes interstitial monitoring of double-walled tanks, areal surveillance, and use of observation wells in the backfill material. This report covers in detail only the last category of leak monitoring techniques. Other programs and types of leak monitoring are briefly discussed below.

1.4.1.1 Inventory Control Inventory control typically involves daily measurements of volume of stored product in each tank and monthly reconciliation of the current tank volume to the input and output records. Volume checks are made either manually by using a gauge stick or automatically by using an electronic level monitor. Detailed recommendations for inventory control procedures have been set forth by the EPA[7] and the American Petroleum Institute[8]. Inventory control, which can detect large leaks, makes good business sense. However, since this technique may not be accurate enough to satisfy the more stringent state and local leak detection regulations, it is often used in conjunction with integrity testing or leak monitoring programs. Electronic inventory control systems improve the accuracy of this technique to detect leaks from underground storage tanks and associated piping.

1.4.1.2 Integrity Testing Integrity (tightness) testing of tanks and pipes involves a point-in-time determination of whether leaks are present in an underground storage tank system. The tests fall into two general categories: quantitative and qualitative tests (sometimes called volumetric and non-volumetric). Either type of test requires the use of specialized equipment and may require shutdown of the facility for up to a full day. Most current regulations specify that a quantitative rather than a qualitative integrity test be performed.

Quantitative tests measure leak rates. These tests monitor changes in product volume by measuring parameters associated with volume changes (including changes in liquid level, temperature, pressure, and density). A number of factors such as temperature stratification within the tank, tank

deformation, vapor pockets, etc., may obfuscate the test results. It is important to use trained test operators who are experienced in identifying and correcting for common test interferences. The current industry recommended practice, as specified by the National Fire Prevention Association (NFPA), is the ability to measure a leak rate of 0.05 gal/hr in tanks of less than 12,500 gallons. The validity of this standard and the ability of various test methods to meet this standard are currently being investigated by the EPA.

Qualitative tests, which involve monitoring either the sounds associated with leaking product or the diffusion of a tracer gas (e.g., helium) introduced into the tank, determine the presence of leaks. These tests do not quantify leak rates. Qualitative tests are not necessarily less sensitive than the quantitative tests. The underlying assumption is that since any leak can be significant over time, determination of a leak rate is not necessary. The most prevalent type of qualitative test uses helium as a tracer. One limitation of this type of test is that the tracer gas is a smaller molecule than the stored product, and it may pass through fittings or other openings that are liquid-tight.

1.4.1.3 Leak Monitoring Interstitial monitors, used with double-walled underground storage tanks, monitor for fluid or pressure changes. Some external continuous leak monitoring systems can be adapted for use as interstitial monitors.

Area-wide surveillance methods include a number of different approaches and techniques. Their typical application is mapping contaminant plumes from spilled hydrocarbons, but they can also be used for leak monitoring. Included in this category are soil core analysis, soil gas analysis, dyes and tracers methods, surface geophysical techniques, monitoring well networks, and other miscellaneous techniques.

1.4.2 Tank System Design

Figure 1-1 illustrates a typical underground storage tank system. Although underground storage tank systems have a number of features in common, several major design options or site characteristics must be considered when evaluating leak detection options. Section 4 discusses the effects of the various design options on the selection of a monitoring approach.

1.4.2.1 New Versus Old System The best time to develop a leak detection program is concurrently with the selection of tanks and associated piping. This allows the system designer maximum flexibility. Considerations include providing a sufficient number of tank openings for potential use of level detectors or integrity test equipment, or providing for monitoring with observation wells. Existing UST systems offer the designer fewer options. For example, it is normally prohibitively expensive to retrofit secondary containment. For many existing tanks, implementing a periodic integrity test schedule and using inventory control may be preferable to retrofitting for leak monitoring capability.

1.4.2.2 Tank and Piping Type Two tank materials are most commonly used: steel and fiberglass. Each is capable of adequate performance under the proper conditions. Since corrosion is the most common cause of leaks in steel tanks, older, unprotected steel tanks in corrosive soils are most at risk and are the most likely to benefit from an integrity test/leak monitoring program. At new steel tank installations, the tanks should be coated and cathodically protected. Other types of tanks that are protected from corrosion include FRP and composites. The composite tanks have a steel inner tank with a thick external coating of FRP.

Piping has been built in the past with carbon or galvanized steel. Coated and cathodically protected steel piping and FRP piping are now commonly used at new installations.

1.4.2.3 Secondary Containment Several types of secondary containment have been used in UST systems: double-walled tanks, clay liners, concrete vaults, and synthetic liners. The use of secondary containment is advisable for environmentally sensitive areas. Secondary containment prevents leaked product from migrating out of the near-tank area before remedial measures can be taken.

A double-walled tank is a tank within a tank, with a small enclosed space separating the two. It is a relatively simple matter to monitor the annular space between tanks for leaks. External leak detection (e.g., observation wells) and integrity testing are not normally necessary for double-walled tanks.

Liners usually consist of a rubber or polymer membrane that lines the tank or piping excavation. Tanks and piping are placed in the hole and backfilled. Observation wells are typically placed within the lined hole to allow leak detection.

Concrete vaults around USTs are mandatory in some states under certain conditions. Since concrete is not an impenetrable barrier to product liquid and vapor transport, it should be lined or coated.

1.4.2.4 Overfill Protection The area around underground storage tanks can become contaminated from the accumulation of small surface spills. The

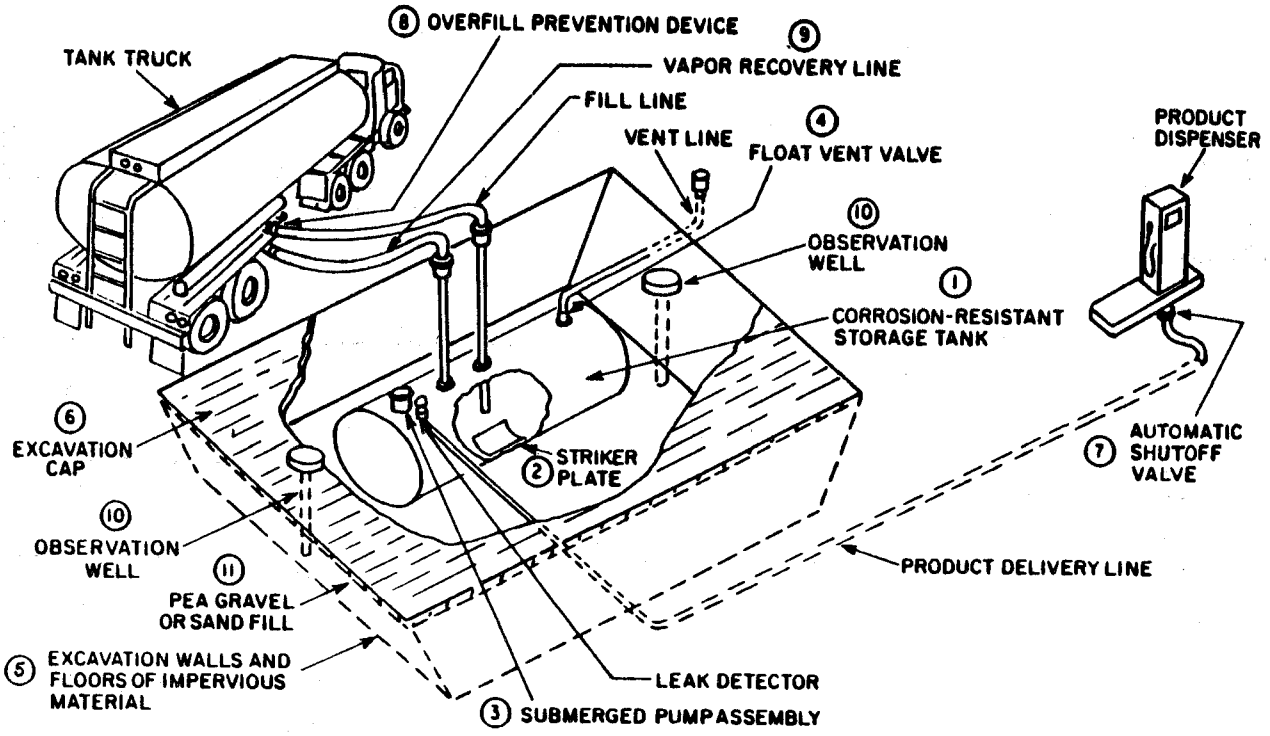

Well designed underground storage systems usually contain the following:
(1) corrosion resistant tank; (2) striker plate under tank fill line; (3) submerged pump with leak detector on product delivery line; (4) float vent valve in tank vent line; (5) excavation walls and floor of impervious material; (6) asphalt or concrete excavation cap; (7) automatic shutoff valve on delivery line at pump island; (8) overfill prevention device at fill line on tank truck; (9) vapor recovery in tank truck during filling operation; (10) observation wells located inside excavation boundaries; (11) pea gravel or sand fill for excavation.
These are all important aspects of a good underground storage system.

Figure 1-1
Elements of an Underground Storage Tank Installation[9]

major cause of such spills is overfilling the tank during liquid transfer operations. This problem can be minimized by using in-tank level sensors, dry couplings on transfer lines, or catchment basins around fill pipes. In installations without overfill and spill prevention systems, it may be difficult to use vapor sensing devices for leak monitoring because of the build-up over time of high background levels of vapor in the soil. This problem may be overcome through the use of compound-specific tracers to assess tank system integrity.

1.4.2.5 Dry Versus Wet Excavations Most UST installation excavations are dry holes. However, in areas of high groundwater, the hole may be wet some or all of the time. In wet-hole systems, external leak detection systems that detect liquid product and that can differentiate between petroleum hydrocarbons and water are preferred. Also, because the water in the hole may enter the tank, the leak detection system can be augmented by monitoring the water layer in the tank as part of inventory control. Site geology, other than ground-water levels, should not significantly affect the selection of a leak monitoring system if the leak monitor is placed in the porous backfill material.

The type of leak monitoring collection system used depends on the depth to groundwater and on the local variability in ground-water level. Some industry trade groups currently recommend using two observation wells per excavation for areas of shallow groundwater (or one well and secondary containment) as in Figure 1-2. For areas with deep groundwater, vapor wells may be used to monitor for leaks as depicted in Figure 1-3.

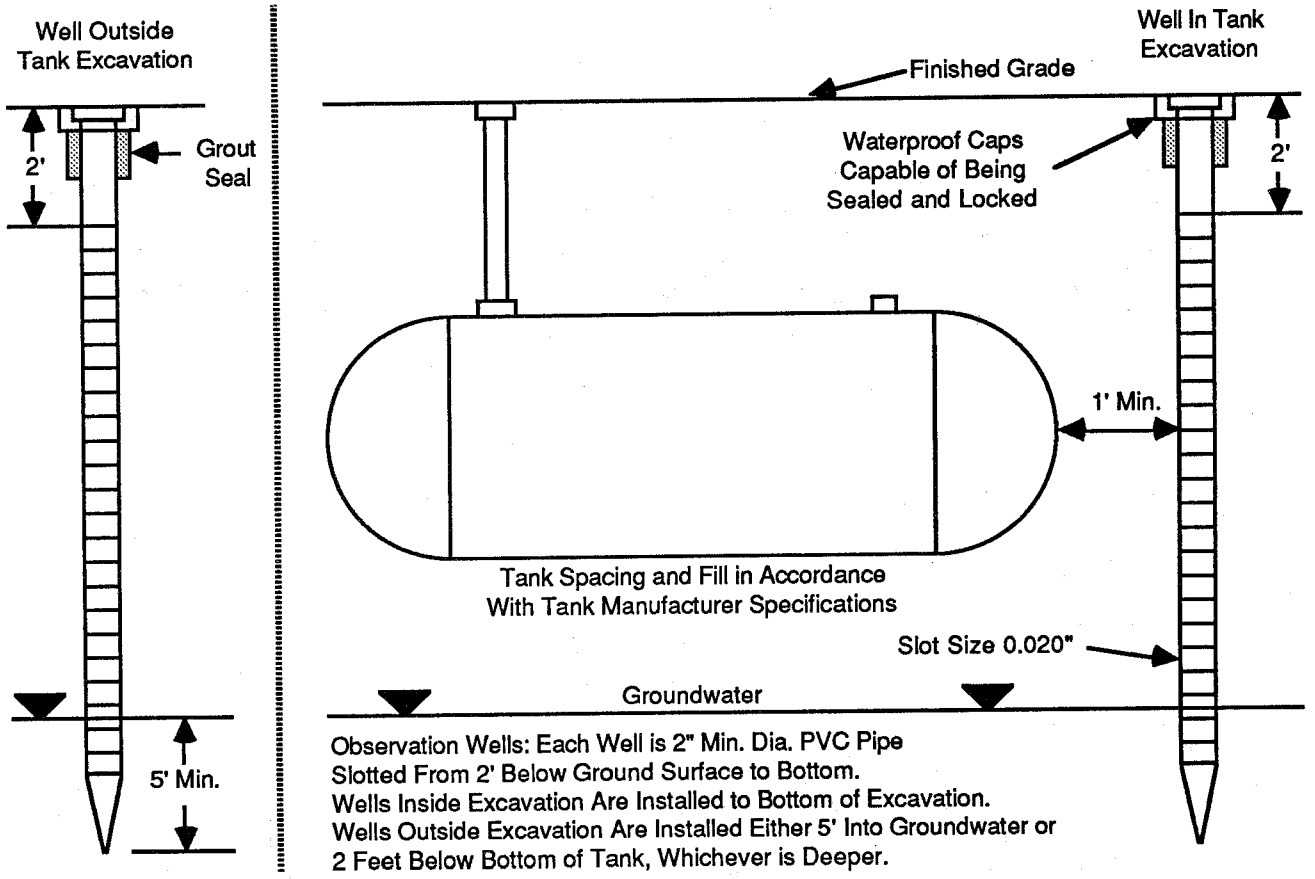

Figure 1-2
Example of Observation Well Installation[10]

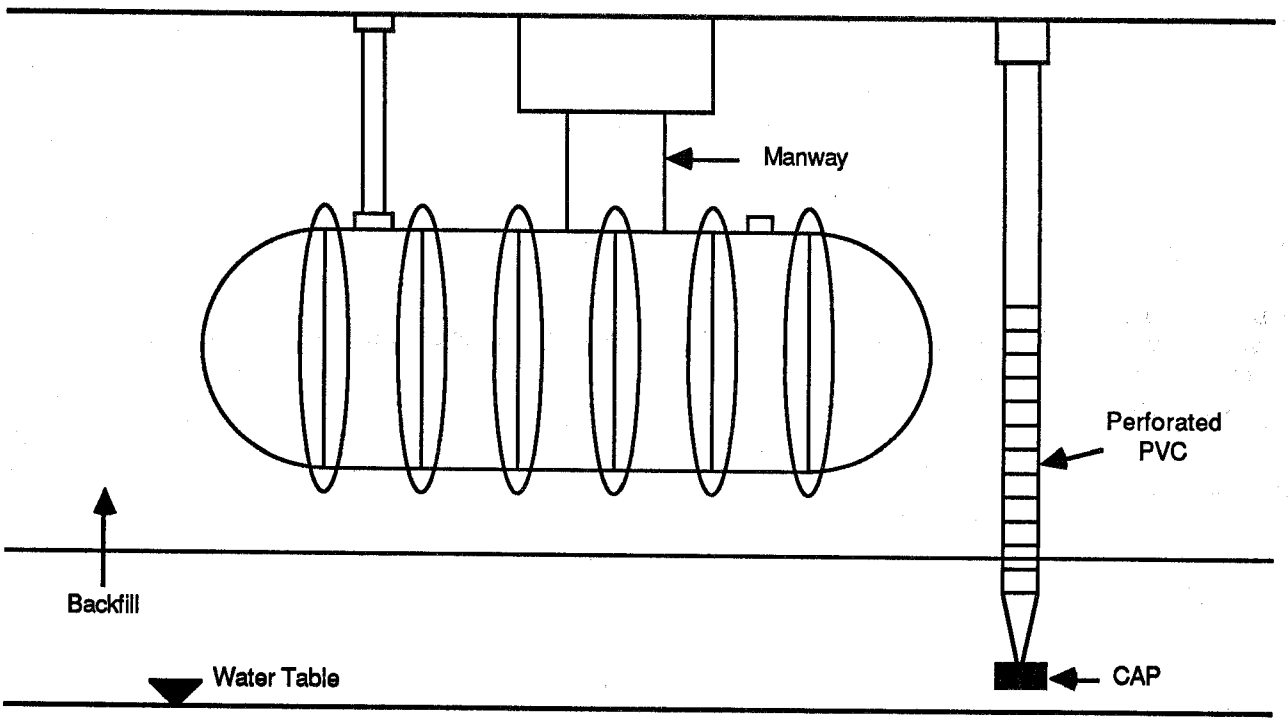

Figure 1-3
Example of Vapor Monitoring Well

SECTION 2
Conclusions and Summary of Results

2.1 Conclusions

Response to the vendor survey accounted for approximately 71 percent of the identified vendors. The response was almost universal from vendors of equipment marketed specifically for UST applications. The literature search conducted in 1986 as part of this study clearly demonstrated a lack of useful, published information regarding external (out-of-tank) petroleum leak monitoring devices and a need for the current program to be performed. Although much valuable information was gained from this study, additional work will be necessary before performance standards and certification procedures can be developed for each category of leak monitoring techniques.

Vendor responses to the questionnaire provided a basis for dividing the petroleum leak monitoring techniques into four basic categories: intermittent liquid-phase detection, intermittent gas-phase detection, continuous liquid-phase detection, and continuous gas-phase detection. Sufficient information was received from the vendor survey to assess and compare the performances of the four general types of techniques and, to a lesser extent, to compare one technique with another. However, insufficient data exist to adequately compare the product of one vendor with the product of another vendor when both are based on the same principle of operation. Also, the vendor responses were inadequate in two important areas: (1) description of common interferences and operational or maintenance problems and (2) provision of certification procedures.

Caution should be observed when evaluating monitor performance based solely on vendor-supplied data. Additional data based on independent third-party evaluations and on the operating experience of actual users is needed to support the development of performance specifications for out-of-tank leak detection monitors.

2.2 Summary of Results

A summary of the results of this investigation is provided below.

2.2.1 Summary of General Findings for External Leak Monitoring Systems

All of the external leak monitoring systems for petroleum hydrocarbons shared some design requirements, detection limitations, installation options, and maintenance claims, according to vendors. The external leak detection devices usually require monitoring wells or boreholes placed downgradient in the excavation pit. The devices are all designed for use with hydrocarbon products, though they may work with other materials. They can all be retrofitted at existing installations. Finally, all vendors state that low or no maintenance costs are typically incurred.

2.2.2 Summary of Findings for Intermittent Liquid-Phase Detector

Intermittent liquid-phase petroleum leak detectors for USTs are inexpensive ($10 to $100) and simple to operate. They are currently marketed and are widely used. They can neither detect vapors nor provide nonspecific detection of liquid hydrocarbons. The vendors list no potential interferences; therefore (based on vendor information alone), the potential for false readings is low. The devices respond to approximately 1/32 to 1/64 inch of product. The usable life for these types of sensors varies from necessary replacement upon detection to indefinite.

2.2.3 Summary of Findings for Continuous Liquid-Phase Detectors

Continuous liquid-phase petroleum leak detectors for USTs have been on the market for up to 15 years, and some vendors have thousands of devices in current use. Costs range from $400 to $1,500 for control panels and from $100 to $700 for sensors. Estimates for installation costs vary widely. Product-soluble leak detection devices will respond to both liquid and vapors. Most continuous liquid sensors respond to 1/8 to 1/32 inch of liquid within 0 to 10 hours (once liquid comes in contact with the sensor). Some potential interferences include hydrocarbons, ultraviolet (UV) light, water vapor, ice, and reduced sulfur compounds. False positive readings may be caused by these interferents and, in some models, by algae or

mechanical failure. The control boxes can usually accommodate multiple sensors and have a long service life.

2.2.4 Summary of Findings for Intermittent Gas-Phase Detectors

Intermittent gas-phase petroleum hydrocarbon leak detectors for USTs have been commercially available for up to 10 years, and some vendors have hundreds to thousands in current use (not necessarily for UST systems). Costs range from $100 to $1,700 for sensors. Estimates for installation costs vary widely. Some gas-phase leak detectors (e.g., GC's) give a compound-specific response. Detection limits range from low part per billion (ppb) to 1,500 part per million (ppm) for the lower limit up to 10 percent to 100 percent of the lower explosive limit (LEL) for the upper limit. Response time is normally within seconds. A number of gas species may act as interferents, and both false positive and false negative readings are possible. The control panels have a long service life, but generally they can accommodate only one sensor. These types of detectors may involve appreciable labor costs and may require special maintenance.

2.2.5 Summary of Findings for Continuous Gas-Phase Detectors

Continuous gas-phase petroleum hydrocarbon leak detectors are generally new to the underground storage tank market, and few are in current use. However, thousands of these types of detectors have been in use for up to 20 years in other applications. Costs range from $500 to $5,000 for control panels and from $65 to $1,500 for sensors. Installation costs vary widely. Certain devices within this category give compound-specific responses. Detection limits range from 10 to 100 ppm at the lower end up to 100 percent of the lower explosive limit (LEL). Response time is very rapid. A relatively large number of interferences were given, and both false positive and false negative readings are possible. The control boxes can usually accommodate multiple sensors and have a long service life. Sensor life ranges from 1 to 10 years.

SECTION 3
Technical Approach

The technical approach to this project consisted of a literature search, compilation of a vendor list, a vendor survey, and evaluation of the data collected from this survey. Each of these tasks is described below.

3.1 Literature Search

A literature search was performed to identify and obtain published documents relating to the UST field in general and to out-of-tank leak monitoring methods in particular. In addition, several researchers active in the area were asked for status reports of their current projects, and product literature was solicited from vendors. Only limited information regarding commercially available leak monitoring systems was obtained from the literature; this information is listed in the bibliography in Section 6.

3.2 Vendor List

A vendor list was generated to facilitate the vendor survey (see Appendix A). The list, based on vendor information obtained from the open literature and from other researchers, was augmented by information from other Radian projects, the Project Officer, and telephone inquiries. Each vendor was called to ascertain what product(s) are currently marketed for UST applications and to obtain product literature.

3.3 Vendor Survey

A vendor survey was performed to gather specific information regarding performance data for each type of out-of-tank sensing device currently in use. The specific types of performance information requested included specificity, threshold detection, response time, interferences, drift, precision, noise, recommended operating environment, and service life. These terms, defined in the glossary, are important because they are the major categories by which system performance can be evaluated. Other data, including capital cost, recommended installation and operation procedures, and maintenance costs, were also obtained from the vendor survey. These data were used to develop generic performance categories for each leak detection classification group(s) and performance ranges for each performance category. The questionnaire format can be found in Appendix B.

SECTION 4
Results

This section presents and discusses the results of the vendor survey. Section 4.1 gives general information regarding the survey. Vendor responses to the survey are tabulated in Section 4.2, and summary tables and tables listing the responses of each vendor are presented. The leak monitoring devices are evaluated in Section 4.3, and the results are discussed in Section 4.4.

4.1 Discussion of Survey

Table 4-1 shows the vendor list generated for this project. The leak monitoring systems listed include both systems designed and marketed specifically for UST applications and general analytical equipment. The list is as complete as possible, though it is probable that additional vendors exist. Only commercially available leak monitoring techniques were considered in this study. Appendix A lists the mailing address, telephone number, and technical representative for each vendor. Vendors identified since the survey was completed are included in Appendix A, but not in Table 4-1. Each vendor was called to determine which products were being marketed or would be most suitable for UST applications. A questionnaire was sent in early 1986 to each vendor, except for vendors of grab sampling equipment, chemical-sensitive pastes, and detector tubes. These types of monitoring devices were thought to be sufficiently simple so that no information other than that contained in the product literature was deemed necessary. As can be seen in Table 4-1, vendors who market products in several categories sometimes completed questionnaires for only one product, implying that this was the product they emphasized in their marketing. Also, it should be noted that two vendors chose not to participate in the survey and that several other companies did not submit responses.

A total of 49 vendors offering a total of 69 products related to leak monitoring for UST systems were identified. Product literature was received for 63 (91 percent) of the products. Survey forms were completed and returned by 30 of the 42 (71 percent) vendors queried. Survey forms were completed and returned for 44 of the 62 (71 percent) products covered by the survey. Survey forms were also received from three vendors of interstitial monitors: Raychem, Emco Wheaton, and Perma-Pipe. Their devices respond to the presence of petroleum hydrocarbons as opposed to interstitial monitors that detect pressure or liquid-level changes. They are, therefore, very similar to external monitoring devices (and, as noted earlier, some external monitoring devices are suitable for use as interstitial monitors). However, these devices fall outside the scope of this project, and therefore, these survey responses are not included in this compilation. A second device offered by Emco Wheaton is suitable for external monitoring and is included in the study.

The EPA Office of Underground Storage Tanks (OUST) has compiled a list of leak detection methods and manufacturers that contains over 250 products. The OUST list includes the vendors and products identified in this document, as well as integrity test, inventory control, line detector, and annular space monitoring methods that are outside the scope of this study.

4.2 Tabulated Results From Survey

This section describes the principle of operation of each leak monitoring technique and is followed by a series of tables summarizing the vendor responses to the questionnaire.

4.2.1 Principle of Operation

The principle of operation for each leak monitoring device listed in Table 4-1 is discussed below. The discussion of the principles of operation has been published previously[7]. The devices fall into four categories according to whether they detect gases or liquids, intermittently or continuously, as depicted in Table 4-2.

The sampling approach required varies among the four categories of leak monitoring devices. Liquid-phase techniques require a monitoring well screened at the surface of the groundwater table or connected to a collection sump. Continuous liquid-phase techniques use some type of sensor installed in the monitoring well to monitor the liquid-air interface. Intermittent liquid-phase techniques involve either temporarily placing a sensor in the monitoring well or removing an aliquot of the well water with a bailer or

Table 4-1
List of Vendors and Response to Survey

Type of Detector/ Company	Device Name/Model Number	Literature Received	Survey Received	Comments
Intermittent Liquid-Phase				
Chemical-Sensitive Paste				
Kolor Kut Products	Water & Gasoline Finding Pastes	X	n/a	
McCabe	Water & Gasoline Indicator Pastes	X	n/a	
Grab Samplers				
NEPCCO	Liquid Samplers[a] and Bailers	X	n/a	
Norton	Bailers[a]	X	n/a	
Continuous Liquid-Phase				
Interface Probe				
Comar, Inc.	Model 807 Tank Monitor	X	X	
	Model 808 Tank Monitor	X	X	
	Model 809 Tank Monitor	X	X	
	PLD-17 Pipeline Monitor	X	X	
EMTEK, Inc.	Electronic Well Gauging[a] Light (EWGL-12)	X	--	
Marine Moisture Control	Sonic Ullage Interface[a] Probe	X	--	
Oil Recovery Systems, Inc.	Interface Probe[b]	--	--	
Product-Soluble Devices				
EMTEK, Inc.	Detectron	X	X	
IFP Enterprise	Oil Fuse	X	--	
In-Situ, Inc.	Petrochemical Release Monitor	X	X	
K&E Associates	PMS-800	X	X	
Pump Engineer Assoc.	Sentinel	X	--	
Technology 2,000, Inc.	TOLTECH Hydrocarbon Monitor	X	X	
Electrical Resistivity Sensors				
Total Containment	Total Containment Cable-TC3000	X	X	
Thermal Conductivity Devices				
Leak-X	Leak-X System	X	X	
Oil Recovery Systems, Inc.	CMS Variable Level System	--	--	
Pollulert Systems (Mallory)	FD102 and FD103	X	X	
Universal Sensors and Devices, Inc.	Leak Alert System	X	X	

Table 4-1
List of Vendors and Response to Survey (continued)

Type of Detector/ Company	Device Name/Model Number	Literature Received	Survey Received	Comments
Intermittent Gas-Phase				
Combustible Gas Detectors				
MSA	Several models[a]	X	--	
Detector Tubes				
MSA	Samplair Pump & Test Kit[a]	X	n/a	
National Draeger, Inc.	Gas & Vapor[a] Detection Products	X	n/a	
FIDs				
Foxboro Analytical	Century OVA[a]	--	--	
Portable GCs				
AID, Inc.	Model 590[a]	X	X	
HNU	Models 201, 301D, 501[a]	X	X	
Microsensor Technology Inc.	Michromonitor[a]	X	--	
Photovac, Inc.	Photovac 10A10[a]	X	X	
Sentex Sensing Tech., Inc.	Scentor[a]	X	--	
XON Tech	GC-810[a]	X	X	
Infrared				
Foxboro Analytical	Miran[a]	--	--	
Horiba Engineering	IR Hydrocarbon[a] Gas Analyzer	X	X	
PIDs				
AID, Inc.	Model 580[a]	X	X	
Astro Resources	Trace Gas Analyzer-1010[a]	X	X	
HNU	Model PI 101[a]	X	X	
Photovac, Inc.	TIP[a]	X	X	
	Underground Tank Monitor	X	X	
Continuous Gas-Phase				
Catalytic Sensor Devices				
Bacharach Instrument Co.	TLV Sniffer[a]	X	X	
	Model 303[a]	X	X	
	Model H Gaspointer[a]	X	X	
Gas Tech, Inc.	Model 1238[a]	X	--	

Table 4-1
List of Vendors and Response to Survey (continued)

Type of Detector/ Company	Device Name/Model Number	Literature Received	Survey Received	Comments
Industrial Scientific Devices	LD-222[a]	X	X	
Intek Corp.	IGD	X	X	
Lumidor Safety Products	Model CRP-1	X	--	Vendor will not respond to survey
Rexnord Gas Detection Products	Combustible Gas[a] Detection System	X	X	
Diffusion Sensors				
Adsistor Technology	Adsistor Sensor[a]	X	X	
Emco Wheaton	Leak Sensor II Vapor Probe	X	X	
EMMCO Enterprises	Env. Control Safety Monitoring System	X	X	
Spearhead Tech., Inc.	STI 2X12 Inground Tank Monitor	X	X	
Metal Oxide Semiconductors				
Armstrong Monitoring	4200 Sensor	X	X	
Azonic Technology Corp.	Enviro-Ranger	X	X	
Calibrated Instrument, Inc.	Pure Air Monitor	X	X	
Enmet Corp.	Several models[a]	X	X	
Genelco, Inc.	Soil Sentry	X	X	
Harco Corp.	Multi Ram 12	--	--	
International	AG5000 & AG5100[a]	X	--	
MSA	Tankgard	X	X	
Oil Recovery Systems, Inc.	Vapor CMS[b]	--	--	
Universal Sensors and Devices, Inc.	Leak Alert	X	X	
U.S. Industrial Products Co.	Tank Monitor	X	X	
Product-Permeable Devices				
Teledyne Geotech	LASP System	X	X	
W.L. Gore	LEAKLEARN	X	--	Vendor will not respond to survey

[a] Not marketed specifically for UST applications.
[b] Not known if product marketed specifically for UST applications.

pump. Monitoring devices that collect pore liquids (e.g., suction cup lysimeters) in the vadose zone are being examined by another member of the EPA-EMSL project team. These devices are currently marketed commercially but not to routinely monitor leaks or spills from underground storage tanks. Gas-phase monitoring techniques--both continuous and intermittent--generally involve some type of extractive pump and sensor. The sample is drawn from the headspace of a monitoring well or from some type of soil probe and is moved to a control box containing the sensing element. However, in some of the continuous gas-phase techniques, the sensing element may be below ground, and an extractive pump is not necessary, though its use will increase the vapor transport rate and will shorten the detection time.

Principle of Operation - Intermittent Liquid-Phase Detection Techniques

Chemical-sensitive pastes. Separate pastes that change color in the presence of liquid water and hydrocarbons (gasoline or oil) are available for sampling observation wells or tank contents. The paste(s) is spread in a thin layer along a weighted tape measure. The tape measure is lowered into the well or tank until the bottom is reached. The tape is retrieved, and the level of the various liquid layers present is read directly from the tape.

Grab sampling. Grab sampling of liquid samples is usually performed by using a bailer, i.e., a Teflon, plastic, or stainless steel pipe with a ball valve in the bottom, as in Figure 4-1. The thickness of any product layer is determined visually, and samples may be decanted for more detailed analysis as required.

Principle of Operation - Intermittent Gas-Phase Detection Techniques

Combustible gas detectors. In combustible gas detectors, a sample gas-air mixture comes in contact with a heated, catalytic filament. The burning sample gas raises the temperature of the detector and, consequently, results in a corresponding increase in electrical resistance. The change in electrical resistance is proportional to concentration and can be measured with a Wheatstone bridge or equivalent

Table 4-2
Commercially Available Leak Monitoring Techniques

Monitoring Category[a]	Technique
Intermittent Liquid-Phase	1. Chemical-sensitive pastes 2. Grab sampling
Intermittent Gas-Phase	1. Combustible gas detector 2. Detector tube 3. Flame-ionization detector 4. Portable gas chromatograph 5. Infrared detector 6. Photoionization detector
Continuous Liquid-Phase	1. Interface probe 2. Product soluble device (includes electrical resistivity detectors) 3. Thermal conductivity device
Continuous Gas-Phase	1. Catalytic sensor 2. Diffusion sensor 3. Metal-oxide semiconductor 4. Product permeable device

[a]Typical use of technique. There is some overlap between intermittent and continuous techniques.

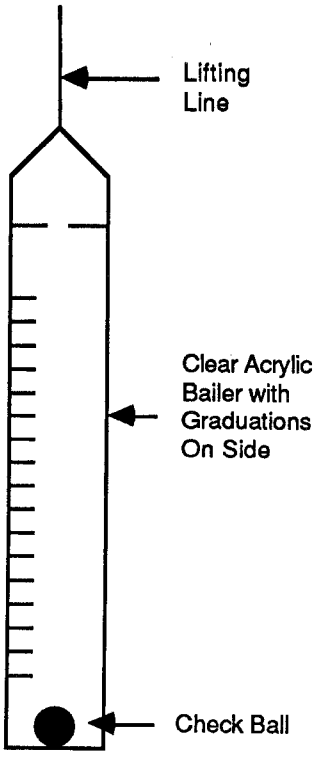

Figure 4-1
Bailer Used for Grab Sampling

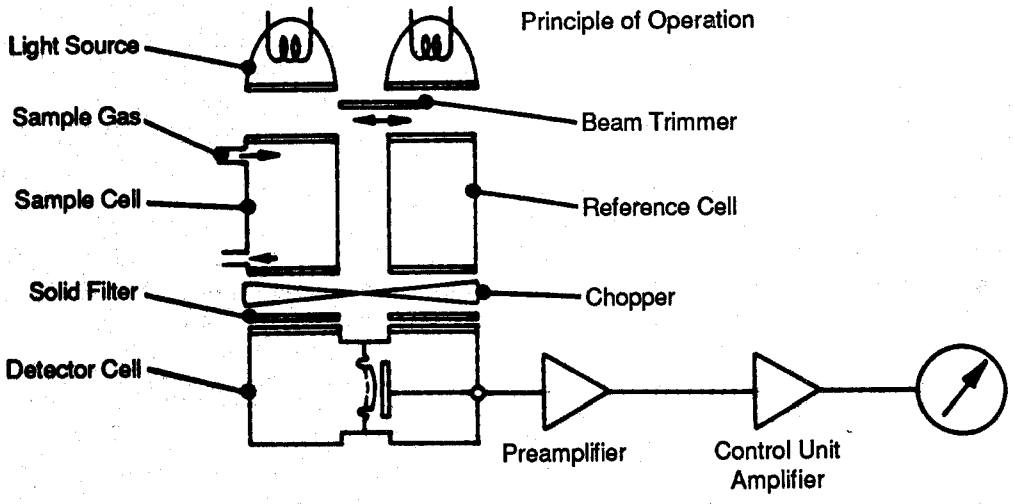

Figure 4-2
Schematic of an Infrared Radiation (IR) Detector[9]

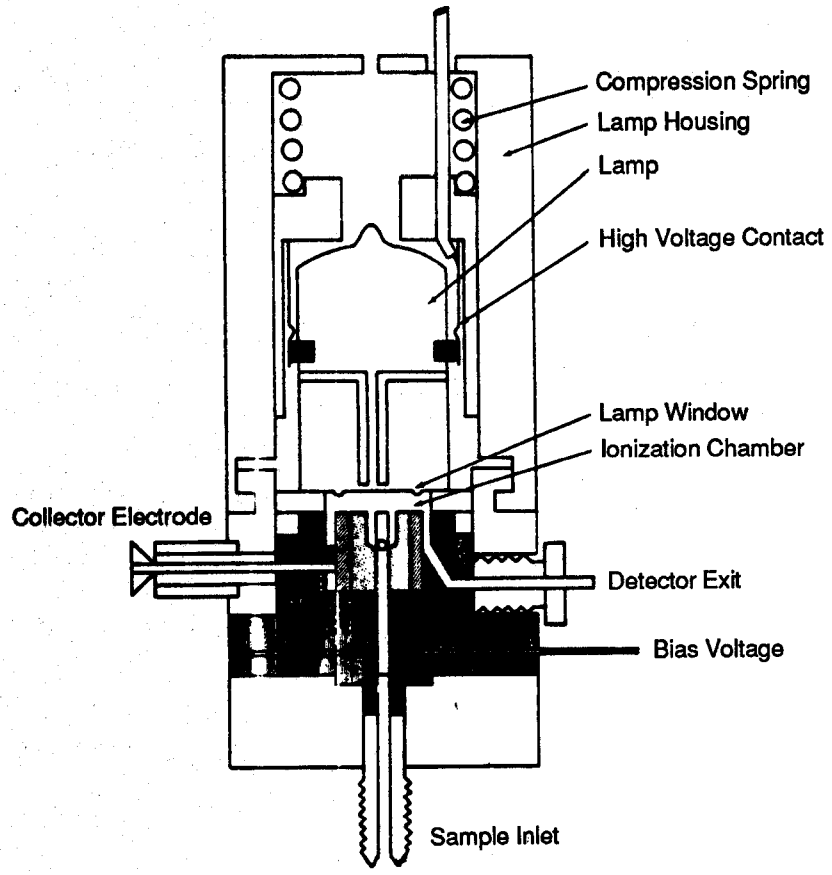

Figure 4-3
Schematic of a Photoionization Detector (PID)[10]

electronic circuit. Combustible gas detectors are not sensitive to low levels of hydrocarbon vapors and are susceptible to catalyst poisoning from lead or other interferents.

Detector tubes. The headspace of observation wells can be monitored by using detector tubes. The sample is collected via a hand-operated bellows pump or an automated battery-powered pump. The sample gas passes through replaceable glass tubes filled with an inert support that has been impregnated with chemicals designed to produce a colorimetric indication in the presence of selected gases, vapors, or aerosols. Detector tubes for a variety of gas species and measurement ranges are available.

Flame-ionization detectors. The flame-ionization detector (FID) operates on the principle that most organic compounds are pyrolyzed when introduced into a hydrogen-oxygen flame and that ions are produced as part of the process. A charged electrode collects the ions, and the resulting current is measured. FIDs show good response to methane and other aliphatic compounds.

Portable gas chromatographs. In gas chromatography (GC), sample gas is transported by a carrier gas over a stationary solid- or liquid-phase material. The sample is chromatographically separated into its various components, and each compound is sequentially detected at one or more gas detectors. GC permits both monitoring for the presence of hydrocarbon species and identification of the hydrocarbons present. Several of the available portable field GCs require no external support equipment such as compressed gas cylinders, AC power, integrator, etc. Sample collection can be accomplished by using gas-tight syringes, sorbent cartridges, evacuated stainless steel canisters, or polymer gas bags. Most GCs require injection of sub-mL sample volumes and do not contain an extractive pump for continuous sample monitoring.

Infrared detectors. Infrared radiation (IR) detectors are based on the absorption of infrared radiation by covalent bonds that result in increased vibrational or rotational energy in the gas molecule. A typical instrument contains an IR lamp source, sample and reference cells, filters, and an infrared light-sensitive detector, shown in Figure 4-2. The light is split and passes through both cells simultaneously. Any difference in power between the two outlet beams is due to absorbance by the sample and is sensed by the detectors and read out as concentration. The

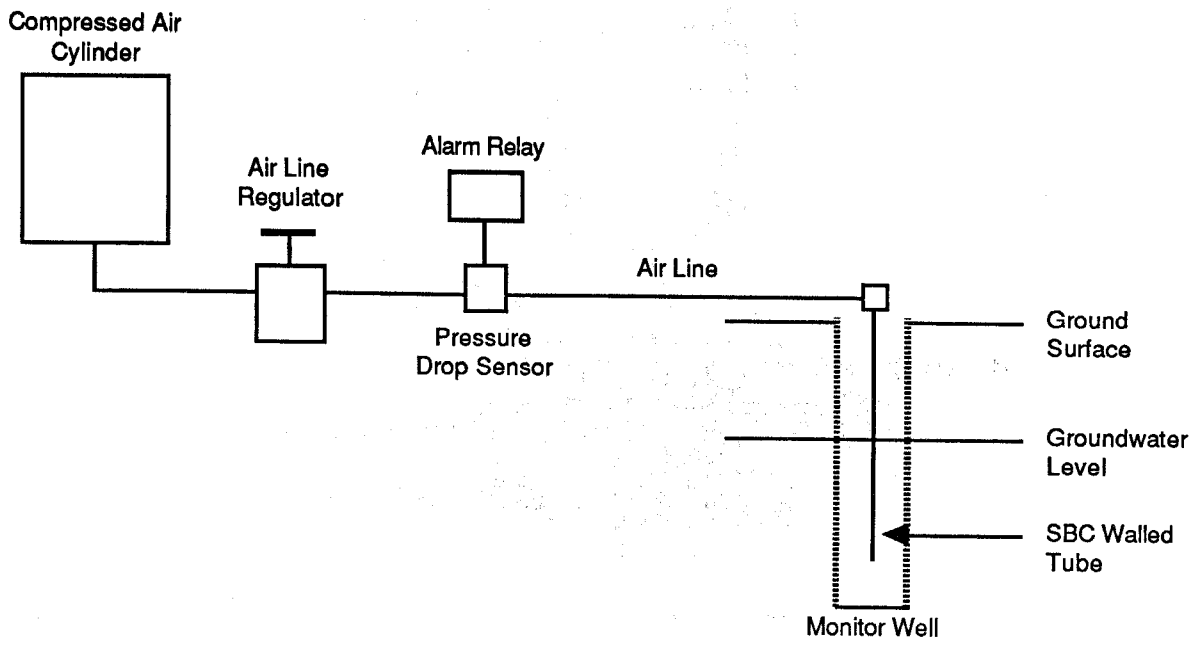

Figure 4-4
Schematic of Leak Monitoring System Using Product-Soluble Pressurized Tube[7]

wavelength of light or the path length of the sample cell can be varied according to the species being monitored and to change the sensitivity.

Photoionization detectors. The photoionization detector (PID) uses a high energy ultraviolet lamp to ionize the sample drawn into the instrument via an internal pump. A typical schematic is shown in Figure 4-3. The ionized sample produces an ion current proportional to concentration which is measured with an ammeter. The PID is not sensitive to any compound having an ionization potential greater than the photon energy from the light source. Insensitive compounds include methane, ethane, and the major atmospheric constituents.

Principle of Operation - Continuous Liquid-Phase Detection Techniques

Interface probes. Interface probes use a combination of an optical sensor and a thermal conductivity sensor. The optical sensor works via a pulsed beam of infrared light being directed down a probe shaft. If the prism-shaped probe tip is dry, the light is reflected back up a second shaft where it is detected by a phototransistor. If the probe tip is immersed in liquid, the light is refracted into the liquid and therefore interrupts the signal to the monitor. A conductivity sensor is used to determine if any liquid present is polar or nonpolar.

Product soluble devices. Product soluble devices use a styrene-butadiene copolymer (SBC) soluble in gasoline but not in water. This principle can be used in a number of ways to detect leaks. One method is to construct SBC hoses and suspend them in a monitoring well, shown in Figure 4-4. The hose is kept pressurized, and the system pressure is monitored. Any product that encounters the hose will dissolve it and will create an air leak. The sensitivity of the detector, which can be varied, depends on product type, hose thickness, and operating pressure.

Several products are marketed wherein dissolution of an SBC component activates a mechanical or electrical alarm, illustrated in Figures 4-5 and 4-6. In an electrical resistivity sensor, a monitor circuit continuously reads a resistor at the end of a SBC-coated conductive cable. The cable contains two conductor wires, as in Figure 4-7. Degradation of the SBC coating permits the two wires to touch, and the touching causes a decrease in resistance. Another example of an SBC-based system is one that uses a SBC resin cord connected to a spring-loaded indicator that is weighted down and placed in a monitoring well. Dissolution of the SBC causes the weight to be released and the indicator device to rise and to activate an alarm.

Thermal conductivity devices. Thermal conductivity sensors are used for continuous monitoring of liquids. The sensor floats on the liquid surface in a monitoring well, shown in Figure 4-8. A heating element in the float is periodically activated, and the heat loss is monitored. The differences in heat loss vary between water (polar) and hydrocarbon (non-polar) compounds and are detected. The sensor transmits a signal to a control box to activate a visual or audible alarm when non-polar liquids are detected. Thermal conductivity devices have been widely used. Typical maintenance problems include (1) biological growth on the probe that insulates it and (2) problems with ice or other obstructions that prevent the sensor from riding on the liquid surface.

Principle of Operation - Continuous Gas-Phase Detection Techniques

Catalytic sensors. Catalytic sensors are a refinement of the combustible gas detectors described earlier. They contain a second heated element that has been coated to be non-reactive with hydrocarbon gases and that acts as a reference cell.

Diffusion sensors. Diffusion sensors (commonly referred to as adsistors) are similar in principle to the MOS detectors described below. Gaseous diffusion carries sample gases into contact with the adsorptive material in the sensor; this process changes the resistance of the sensor. No heating element is used. The sensor detects any gas with a Van der Waals "a" constant (a measure of the attractive force between molecules) above a certain threshold value. The major atmospheric gases are not detected and are not interferents.

Metal-oxide semiconductors. Metal-oxide semiconductors (MOS) represent one method used for continuous, gas-phase leak monitoring. A heater and collector are embedded in a solid-state cell which is composed of metal and non-metal oxides of transition elements. At operating temperature, a specific resistance exists between the sensor elements. Gas molecules are dissociated into charged ions or ion complexes on the surface of the sensor. The resistance of the element junction changes in proportion to the concentration of certain gas molecules. Either the sensor is placed in the monitoring well, or a sample is aspirated to the sensor. The latter configuration allows one sensor to monitor several locations.

Product permeable devices. Several materials are available that are permeable to hydrocarbons (oleophilic) but not to water (hydrophobic). The best known of these materials is Gore-Tex°. Two leak monitoring systems use these selectively permeable

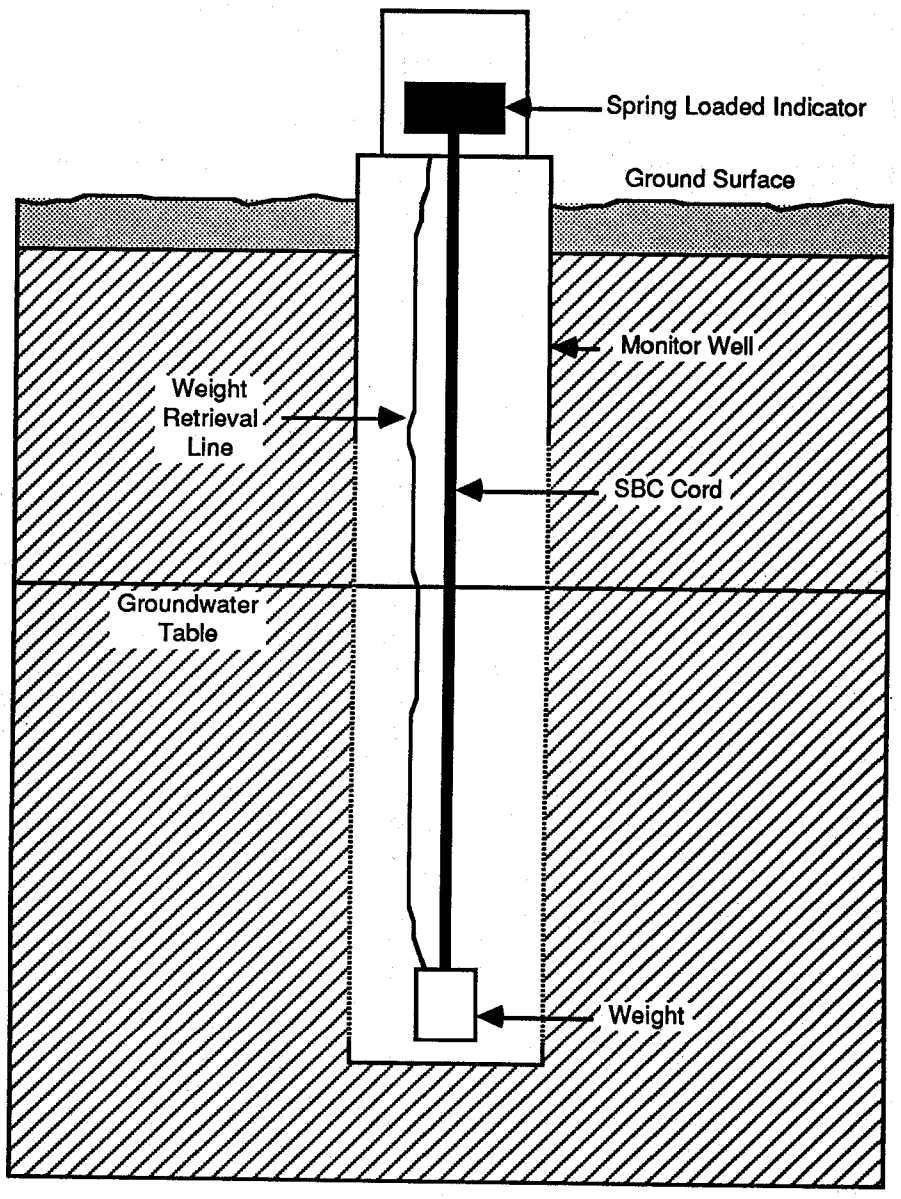

Figure 4-5
Schematic of Mechanically Activated, Product-Soluble Device[7]

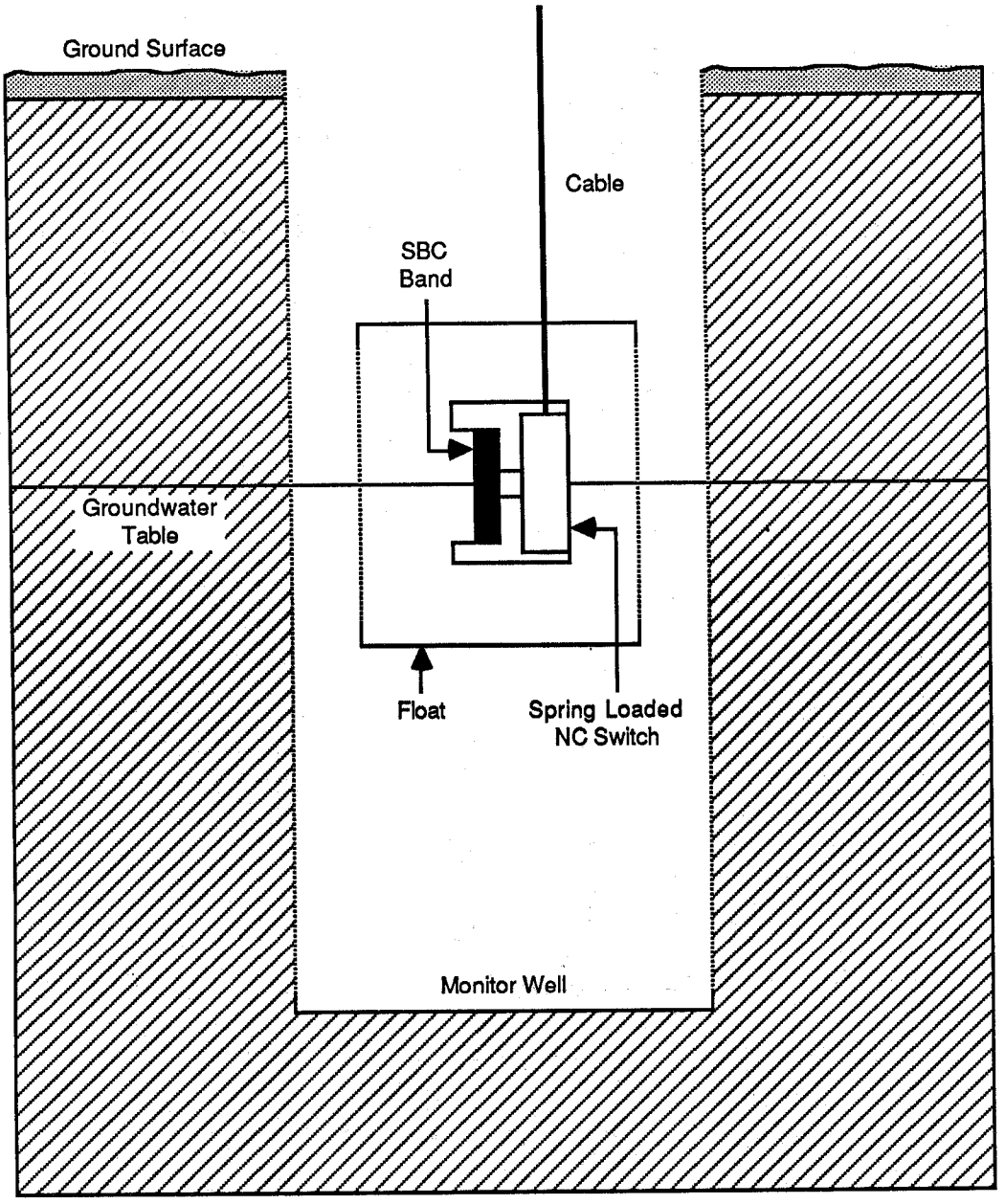

Figure 4-6
Schematic of Electrically Activated, Product-Soluble Device[7]

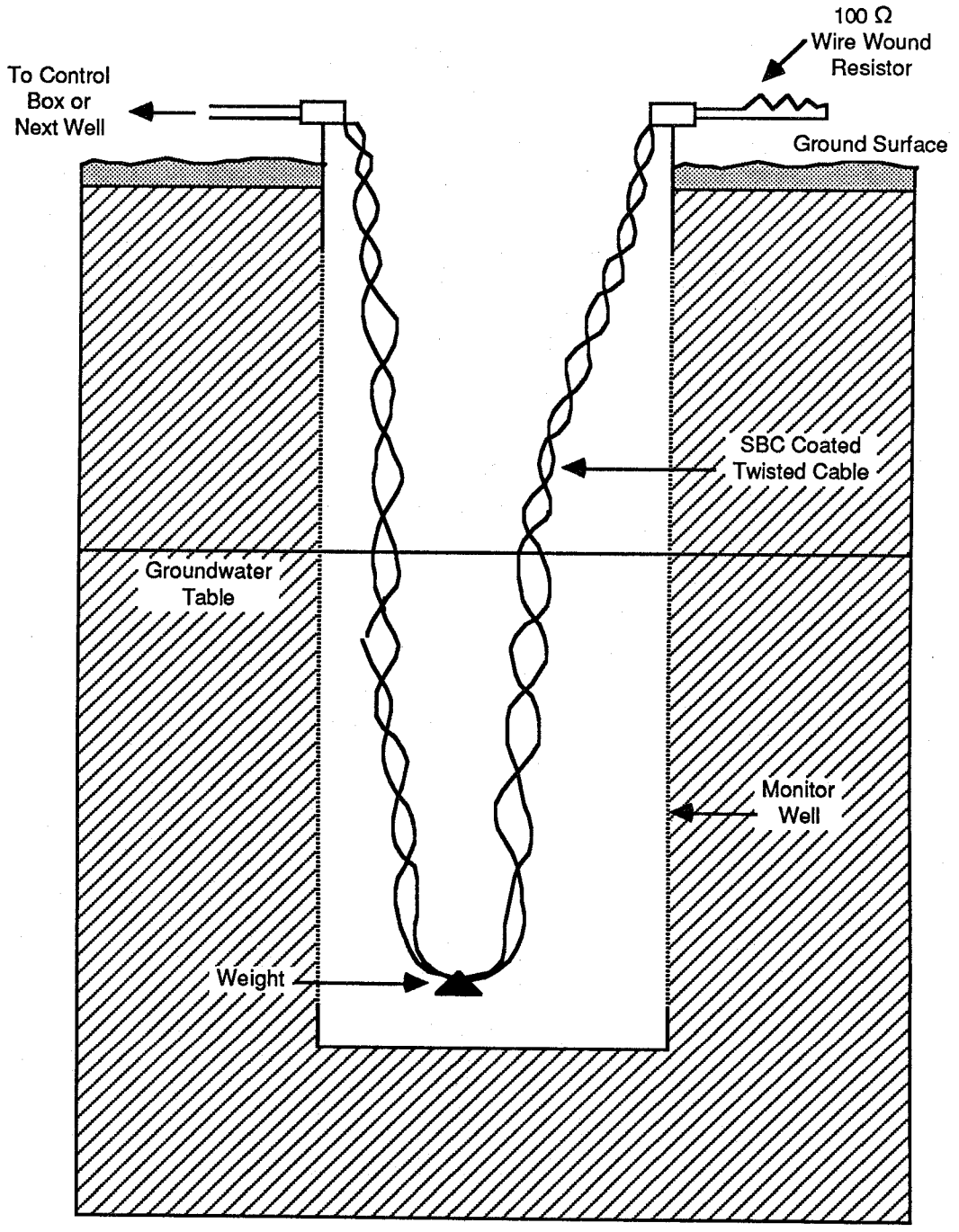

Figure 4-7
Schematic of Electrical Resistivity Sensor Coated With Product-Soluble Polymer[7]

membranes. In one, the membrane surrounds perforated tubing, shown in Figure 4-9. Gases that diffuse into the tubing are pumped to a metal-oxide semiconductor detector (discussed above). The time delay between initiation of the pump cycle and detection indicates the location of the leak. In the second system, the membrane surrounds a coaxial cable. Oil diffusion through the membrane causes capacitance changes in the cable and indicates the presence of a leak. Pulse reflection techniques are used to locate the position of the leak along the cable.

4.2.2 Other Results

Tables 4-3 through 4-7 summarize the information provided by vendors. The tables address detection specificity, detection capability, experience, cost, and recommended procedures. Vendor responses have been condensed to a typical response or operating range per type of monitoring technique, and information from the product literature and scientific judgment are also incorporated. Responses from each vendor are tabulated in Appendix C.

4.3 Evaluation of Results

The division of leak monitoring techniques into performance categories, the cost-effectiveness of those techniques, and method selection as a function of site-specific factors are evaluated in this section. The evaluation is by type of monitoring system. Insufficient information exists at this time to evaluate products within a given system type adequately.

4.3.1 Performance Categories of Leak Monitoring Techniques

One of the main objectives of this phase of the project was to divide the large number of commercially available leak monitoring products into groups of

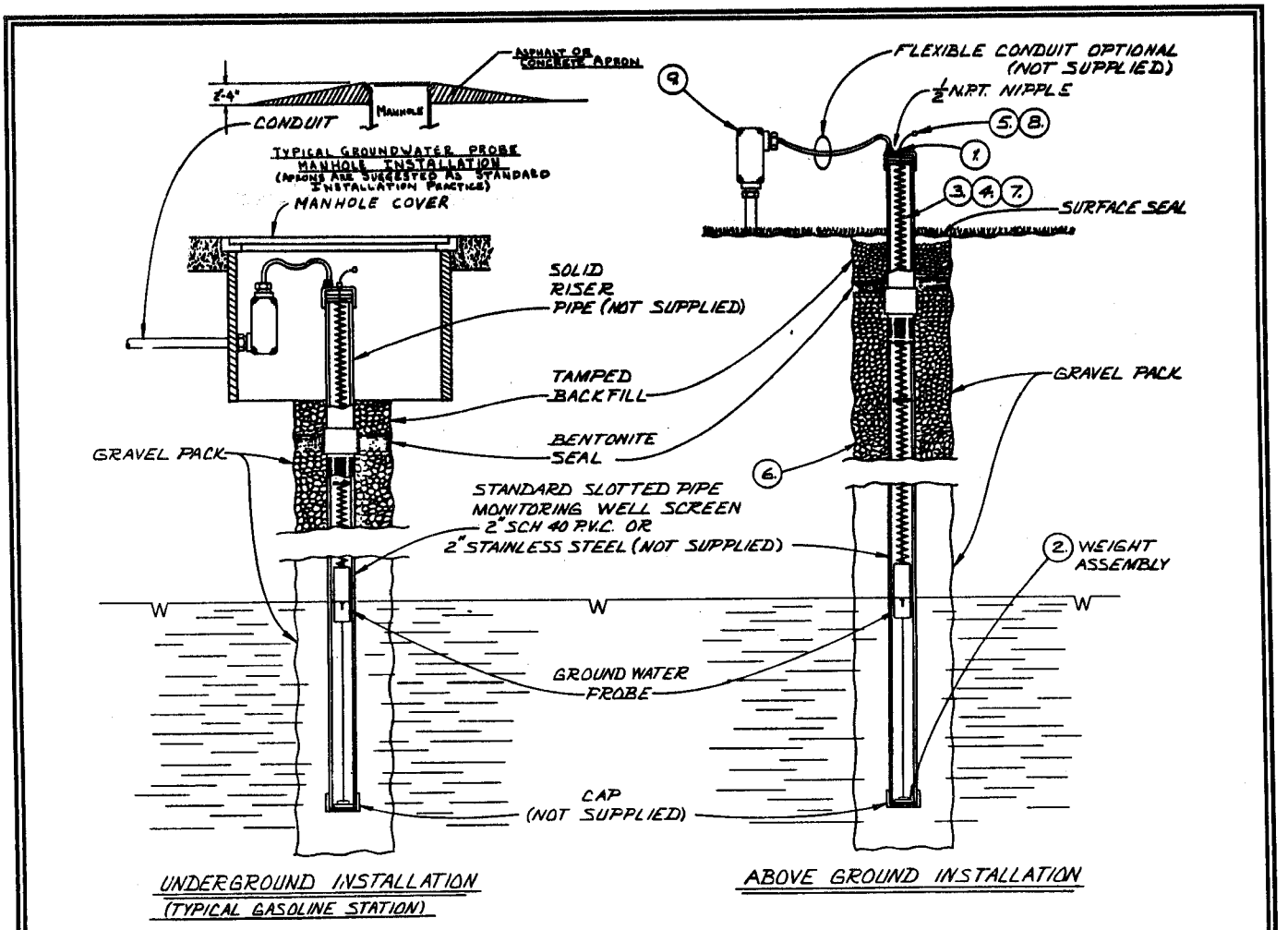

Figure 4-8
Schematic of Typical Installations of Thermal Conductivity Sensor[11]

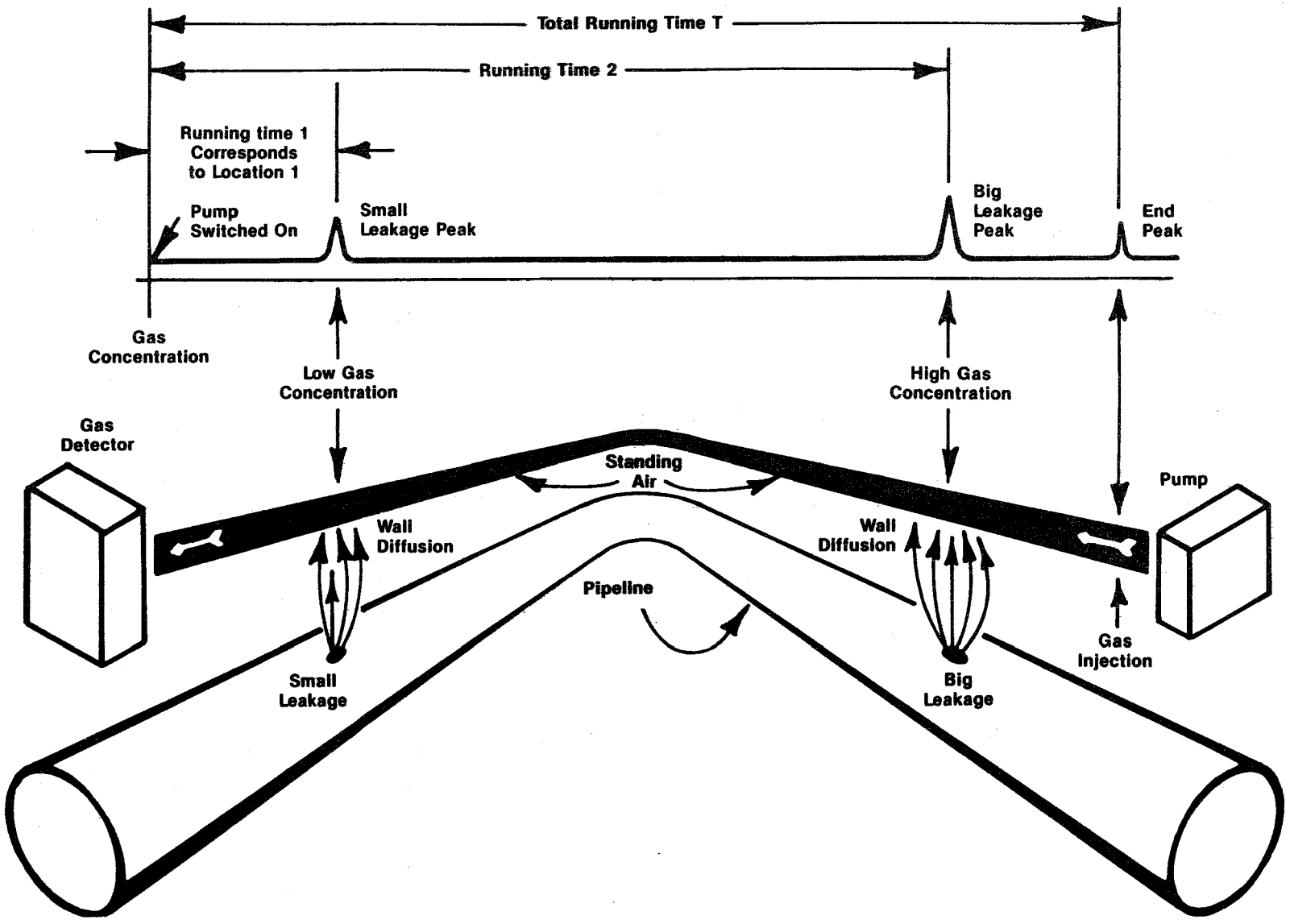

Figure 4-9
Schematic of Product-Soluble Device[12]

Table 4-3
Detection Specificities of Various Leak Monitoring Techniques

Type of Detector	Detects Gas	Detects Liquid	Type of Compound Detected	Detection Adjustable for Specific Compounds	Potential Interferents	False Positives or Negatives[a]	Severity Interferents
Intermittent Liquid-Phase							
Grab Samplers	No	Yes	Immiscible Liquids	No	None	Unlikely	N/A
Chemical-Sensitive Paste	No	Yes	Hydrocarbons	No	None	Unlikely	N/A
Continuous Liquid-Phase							
Interface Probe	No	Yes	Hydrocarbons	No	None	No	N/A
Product Soluble Devices	Yes	Yes	Hydrocarbons	Yes	Background HC's UV Light	N/A	Variable
Electrical Resistivity Sensors	Yes	Yes	Hydrocarbons	No	Background HC's UV Light	No	Variable
Thermal Conductivity Devices	No	Yes	Hydrocarbons	No	ICE, H_2S	Both	Variable
Intermittent Gas-Phase							
Detector Tubes	Yes	No	Variety of Gases	Yes	None	None	Low
Combustible Gas Detectors	Yes	No	Hydrocarbons	No	Pb,H_2O,O_2,S CO_2,CH_4,Cl,etc.	Both	Potentially High
PID's	Yes	No	Aromatics	No	Water Vapor S cmpds.	Positives	Application Dependent
Portable GC's	Yes	No	Hydrocarbons	Yes	None	No	N/A
FID's	Yes	No	Aliphatics	No	Methane	Positives	Variable
Infrared	Yes	No	Hydrocarbons	Yes	Variable	Positives	Variable
Continuous Gas-Phase							
Catalytic Sensor Devices	Yes	No	Hydrocarbons	No	Pb,H_2O,O_2,S CO_2,CH_4,Cl,etc.	Both	Variable
Metal Oxide Semi-Conductors	Yes	No	Hydrocarbons	No	CH_4,H_2O,CO,S	Both	Normally Low
Product Permeable Devices	Yes	No	Hydrocarbons	No	CH_4,H_2O,S, Background HC's	Both	Variable
Diffusion Senors	Yes	Yes	Hydrocarbons	Yes	Gas Displacement	None	Unlikely

[a]False positives that are due to background contamination from spills, etc., are possible with any of the detectors.

Table 4-4
Detection Capabilities of Various Leak Monitoring Techniques

Type of Detector	Detection Limit			# of Sensors Per Control Box	On-Line Time	Service Life	
	Lower	Adjustable	Upper			Control Box	Sensors
Intermittent Liquid-Phase							
Grab Samplers	1/32 in.	No	None	N/A	N/A	N/A	Indefinite
Chemical-Sensitive Paste	1/64 in.	No	None	N/A	N/A	N/A	N/A
Continuous Liquid-Phase							
Interface Probe	1/8 in.	No	None	1-4	Continuous	>3 yrs.	>5 yrs.
Product Soluble Devices	1/32 in.	Yes	None	4-15	Continuous	>10 yrs.	Til Leak Detected
Electrical Resistivity Sensors	1/32 in.	Yes	N/A	1	Continuous	Indefinite	Indefinite
Thermal Conductivity Devices	1/8 in.	Yes	N/A	10-15	Continuous	>3 yrs.	>2 yrs.
Intermittent Gas-Phase							
Detector Tubes	0.5 ppm	Yes	2000 ppm	N/A	N/A	N/A	N/A
Combustible Gas Detectors	1500 ppm	No	100% LEL	1	Continuous	10 yr.	1 yr.
PID's	0.1 ppm	Yes	20,000 ppm	1-32	N/A	5-10 yr.	2 yr.
Portable GC's	5 ppb	Yes	2000 ppm	1	N/A	5-10 yr.	2 yr.
FID's	5 ppm	No	10%	1	N/A	5-10 yr.	Indefinite
Infrared	5 ppm	Yes	100%	1	N/A	5-10 yr.	Indefinite
Continuous Gas-Phase							
Catalytic Sensor Devices	50 ppm	No	100% LEL	1-8	Continuous	10 yr.	>1 yr.
Metal Oxide Semi-Conductors	10 ppm	Yes	1%	1-32	Continuous	10 yr.	5 yr.
Product Permeable Devices	10 ppm	Yes	1%	1	Continuous	10 yr.	5 yr.
Diffusion Sensors	100 ppm	Yes	100%	4-16	Continuous	10 yr.	10 yr.

Table 4-4
Detection Capabilities of Various Leak Monitoring Techniques (continued)

Type of Detector	Response Time	Lag Time	Rise Time	Fall Time	Drift	Noise	Precision
Intermittent Liquid-Phase							
Grab Samplers	N/A	N/A	N/A	N/A	N/A	N/A	N/A
Chemical-Sensitive Paste	<1 sec.	N/A	N/A	N/A	N/A	N/A	N/A
Continuous Liquid-Phase							
Interface Probe	sec.-30 min.	Not Known	Not Known	Not Known	Not Known	Not Known	Not Known
Product Devices	<20 min.	<20 min.	<1 min.	N/A	N/A	N/A	Not Known
Electrical Resistivity Sensors	1-10 hr.	1-10 hr.	<1 min.	N/A	N/A	N/A	Not Known
Thermal Conductivity Devices	<1 sec.	1-5 sec.	<1 sec.	<1 sec.	N/A	N/A	Not Known
Intermittent Gas-Phase							
Detector Tubes	<1 min.	Negl.	<1 min.	N/A	N/A	Not Known	Not Known
Combustible Gas Detectors	Not Known	Not Known	Not Known	Not Known	Not Known	Not Known	Not Known
PID's	3 sec.	<1 sec.	3 sec.	5-10 sec.	<1% of Full Scale	<1% of Full Scale	10%
Portable GC's	Variable	N/A	N/A	N/A	<1% of Full Scale	<1% of Full Scale	5-10%
FID's	10 sec.	<1 sec.	10 sec.	10-15 sec.	Negl.	Negl.	10%
Infrared	30 sec.	<1 sec.	30 sec.	30 sec.	2%/day Full Scale	<1% of Full Scale	<1% of
Continuous Gas-Phase							
Catalytic Sensor Devices	20 sec.	2-3 sec.	17 sec.	20 sec.	2% of	1% of Full Scale	5% Full Scale
Metal Oxide Semi-Conductors	<30 sec.	3-10 sec.	20 sec.	30-60 sec.	Not Known	Negl.	1-10%
Product Permeable Devices	<10 min.	<10 min.	20 sec.	30-60 sec.	Not Known	Not Known	Not Known
Diffusion Sensors	1-5 sec.	<1-5 sec.	<1-5 sec.	15 sec-min.	Negl.	Negl.	Not Known

Table 4-5
Experience of Various Leak Monitoring Techniques

Detector	Product On Market	Years On Market	Number in Service	Has Leak Been Found?	Operating Experience	Maintenance Problems	Cause of False Negatives	Cause of False Positives
Intermittent Liquid-Phase								
Grab Samplers	Yes	Many	1,000's	Yes	Cheap & Simple	Minimal Error	Operator	N/A
Chemical-Sensitive Paste	Yes	Many	1,000's	Yes	Cheap & Simple	Minimal Error	Operator	N/A
Continuous Liquid-Phase								
Interface Probe (cont. monitor)	Yes	0.5	12	No	Limited Data	None	Break in Cable	N/A
Product Soluble Devices	Yes	<1	>200	Yes	Not Known	Ice	N/A	Bkgrnd. HC's Polymer Degrad.
Electrical Resistivity Sensors	Yes	15	>500	Yes	Not Known	Minimal	None	Bkgrnd. HC's Polymer Degrad.
Thermal Conductivity Devices	Yes	10	1,000's	Yes-Many	Used by Some Major Oils	Ice, Algae, Hung-up Float	Elec. Short	Fouled or Hung-up Probe
Intermittent Gas-Phase								
Detector Tubes	Yes	Not Known	1,000's	Not Known	Cheap and Simple	Minimal	Unlikely	Gas Interferents
Combustible Gas Detectors	Yes	Not Known	Not Known	Not Known	Not Known	Poisoned Catalyst	Low Sensitivity	Not Known
PID's	Yes	2-10	>4,000	Yes	Widely Used as Portable Instr.	Calibration	Water Vapor	Gas Interferents
Portable GC's	Yes	1-10	1,000's	Yes	Need Exper. Operator	Columns	Unlikely	Unlikely
FID's	Yes	>5	Not Known	Yes	Widely Used as Portable Instr.	Calibration	Unlikely	Methane
Infrared	Yes	10	100's	Yes	Not Known	Not Known	N/A	Gas Interferents

Table 4-5
Experience of Various Leak Monitoring Techniques (continued)

Detector	Product On Market	Years On Market	Number in Service	Has Leak Been Found?	Operating Experience	Maintenance Problems	Cause of False Negatives	Cause of False Positives
Continuous Gas-Phase								
Catalytic Sensor Devices	Yes	1-15	>70,000	Yes	Used by Some Major Oils	Poisoned Catalyst	Not Known	Not Known
Metal Oxide Semi-Conductors	Yes	0-12	>1,300	Yes	Not Known	Minimal	Water Vapor Elec. Short	Unlikely
Product Permeable Devices	Yes	4	5	Yes	Limited Use	Pump Burn-Out	Sensor Break	N/A
Diffusion Sensors	Yes	1.5-20	>75,000	Yes	Good	Minimal	None	Elec. Short

Table 4-6
Costs For Various Leak Monitoring Techniques

Type of Detector	Capital Costs ($)		Installation Costs ($) (4 Tanks)				Labor Costs-$
	Control Box	Sensor	New Facility	Old Facility	Old Well	Maintenance Costs-$	
Intermittent Liquid-Phase							
Grab Samplers	N/A	<100	N/A	N/A	N/A	Nil	High
Chemical-Sensitive Paste	N/A	<10	N/A	N/A	N/A	Nil	Medium
Continuous Liquid-Phase							
Interface Probe (cont. monitor)	1,200	200	Not Known	Not Known	Not Known	Minimal	Low
Product Soluble Devices	400-1,200	200-900	1,500-11,000	3,000-11,000	1,500-7,000	Minimal	Low
Electrical Resistivity Sensors	1,500	100-200	2,800	5,500	3,300	Minimal	Low
Thermal Conductivity Devices	1,400	600-700	2,500	5,500	4,200	600/yr.	Low
Intermittent Gas-Phase							
Detector Tubes	N/A	<100	N/A	N/A	N/A	Nil	Medium
Combustible Gas Detectors	Not Known	Not Known	Not Known	Not Known	Not Known	Not Known	Low
PID's	3,900-6,300	200-1,700	N/A	N/A	N/A	N/A	Medium
Portable GC's	5,800-14,000	N/A	N/A	N/A	N/A	N/A	High
FID's	5,000	N/A	N/A	N/A	N/A	N/A	Medium
Infrared	1,750-9,000	N/A	1,750-30,000	1,750-30,000	Not Known	Variable	Medium
Continuous Gas-Phase							
Catalytic Sensor Devices	700-2,400 (avg=1,000)	65-200	Not Known	Not Known	Not Known	Minimal	Low
Metal Oxide Semi-Conductors	500-4,000 (avg=1,000)	28-1,500 (avg=100)	Not Known	Not Known	Not Known	Minimal	Low
Product Permeable Devices	5,000	6/ft.	Not Known	Not Known	Not Known	Minimal	Low
Diffusion Sensors	1,400-4,200	200-300	5,000	7,000	5,000	0-1,800/yr.	Low

Table 4-7
Recomended Procedures for Various Leak Monitoring Techniques

Type of Detector	Are Wells Required?	Can System Be Retrofitted?	Recommend Site Study	Utility Service	Location to Tank	Distance From Tank
Intermittent Liquid-Phase						
Grab Samplers	Yes	Yes	Yes	None	Downgradient	In Excavation
Chemical-Sensitive Paste	Yes	Yes	Yes	None	Downgradient	In Excavation
Continous Liquid-Phase						
Interface Probe (cont. monitor)	Yes	Yes	Yes	None	Downgradient	On Perimeter of Excavation
Product Soluble Devices	Usually	Yes	Yes	None or Elec.	Depends on # of Sensors	Variable
Electrical Resist-ivity Sensors	Yes	Yes	Yes	AC Line	In Excavation	2 ft.
Thermal Conductivity Devices	Yes	Yes	Yes	AC Line	Below Tank	2 ft. Bottom
Intermittent Gas-Phase						
Detector Tubes	Usually	Yes	Yes	None	Downgradient	In Excavation
Combustible Gas Detectors	Usually	Yes	Yes	AC Line	Downgradient	In Excavation
PIDs	Usually	Yes	Yes	None or Elec.	Downgradient	In Excavation
Portable GCs	Usually	Yes	Yes	None or Elec.	Downgradient	In Excavation
FIDs	Usually	Yes	Yes	None	Downgradient	In Excavation
Infrared	Usually	Yes	Yes	None or Elec.	Downgradient	In Excavation
Continuous Gas-Phase						
Catalytic Sensor Devices	Usually	Yes	Yes	None or Elec.	Variable	Variable
Metal-Oxide Semiconductors	Usually	Yes	Yes	None or Elec.	In Excavation	1 ft.
Product Permeable Devices	No	Yes	Yes	AC Line	In Excavation	Not Known
Diffusion Sensors	Usually	Yes	Yes	AC Line	Under Tank Bottom	Close Proximity

Table 4-7
Recommended Procedures for Various Leak Monitoring Techniques (Continued)

Type of Detector	Number of Sensors Per Tank	Calibration Procedures	Adjustable Instrument Settings	Use in Wet Soil	Operating Environment	Temp. Range	Voltage Range
Intermittent Liquid-Phase							
Grab Samplers	N/A	N/A	N/A	Yes	N/A	>0 °C	N/A
Chemical-Sensitive Paste	N/A	N/A	N/A	Yes	N/A	N/A	N/A
Continuous Liquid-Phase							
Interface Probe (cont. monitor)	1-4	None	None	Yes	Any	-45-60°C	N/A
Product Soluble Devices	1-4	None	None	Yes	Any	0-50°C	85-135V
Electrical Resistivity Sensors	4	None	None	Yes	Any	0-120°C	--
Thermal Conductivity Devices	4	None	None	Yes	Any	-40-50°C	100-140V
Intermittent Gas-Phase							
Detector Tubes	N/A	Cal. Gas	Yes	Yes	N/A	N/A	N/A
Combustible Gas Detectors	Not Known	Not Known	Not Known	Not Known	Not Known	Not Known	Not Known
PIDs	1-6	Cal. Gas	Several	Yes	Any	0-50°C	110-120V
Portable GCs	1 or More	Cal. Gas	Several	Yes	Non-Explosive	0-50°C	110-115V
FIDs	Not Known	Cal. Gas	None	Yes	Any	0-60°C	N/A
Infrared	Not Known	Cal. Gas	Zero/Span	Yes	Any	0-40°C	110-130V
Continuous Gas-Phase							
Catalytic Sensor Devices	Variable	Cal. Gas	None-Several	Yes	Any	-20-50°C	105-130V
Metal-Oxide Semiconductors	1-2	Cal. Gas	None-Several	Yes	Non-Explosive	-10->60°C	105-125V
Product Permeable Devices	2	Cal. Gas	Gain/Zero	Yes	Any	Not Known	Not Known
Diffusion Sensors	1 or More	Cal. Gas	Several	Yes	Air	-75-70°C	105-125V

Table 4-7
Recommended Procedures for Various Leak Monitoring Techniques (Continued)

Type of Detector	Maint. Require.	Maint. Schedule	Calibration Procedures	Calibration Schedule	Flow Rate	Certifi-cation	Surface Vs. Under-ground
Intermittent Liquid-Phase							
Grab Samplers	Cleaning	Before Use	N/A	N/A	N/A	No	No
Chemical-Sensitive Paste	Cleaning	Before Use	N/A	N/A	N/A	No	No
Continuous Liquid-Phase							
Interface Probe (cont. monitor)	Inspect System	Once every 2 yrs	None	N/A	N/A	No	No
Product Soluble Devices	Inspect System	2/yr.	None	N/A	N/A	Yes	No
Electrical Resis-tivity Sensors	Inspect System	Not Known	None	N/A	N/A	Yes	No
Thermal Conductivity Devices	Inspect System	6/yr.	None	N/A	N/A	Yes	No
Intermittent Gas-Phase							
Detector Tubes	None	N/A	Std. Gas	As Required	Not Known	No	No
Combustible Gas Detectors	Inspect System	Not Known	Not Known	Not Known	Not Known	Not Known	No
PIDs	Clean Lamp	As Needed	Zero/Span	Daily	0.05-0.6 L/min.	Std. Gases	No
Portable GCs	Columns	2/yr.	Gas Stds.	Daily	0.01 L/min.	Std. Gases	No
FIDs	Replace Fuel	As Needed	Zero/Span	Daily	Not Known	Std. Gases	No
Infrared	Various	Monthly	Gas Stds.	Daily-Monthly	0.5-1.5 L/min.	Std. Gases	No
Continuous Gas-Phase							
Catalytic Sensor Devices	Periodic Calibration	Variable	Std. Gas	Variable	0.5-1 L/min.	Cert. Gas	No
Metal-Oxide Semiconductors	Inspect System	2/yr.	Std. Gas	Variable	2 L/min.	Cal-Kits	No
Product Permeable Devices	Not Known	Not Known	Not Known	Not Known	0.7-1.1 L/min.	Not Known	No
Diffusion Sensors	Inspect System	4/yr.	Electronic	At Install.	N/A	Not Known	No

products with similar performance characteristics. This grouping will make it easier to determine the number of sets of performance specifications and certification procedures that need to be developed in subsequent phases of this project.

Analysis of vendor responses revealed that the leak monitoring techniques fall into four relatively obvious categories, illustrated in Figure 4-10. Several factors, such as regulatory constraints and type of facility (old versus new), proved to be unimportant at this time in categorizing the techniques; this is contrary to initial expectations. There is some overlap between the categories. For instance, the product-soluble devices will react with vapor as well as liquid, though at a much slower rate.

4.3.2 Site-Specific Factors

Table 4-8 summarizes the effect of site-specific factors on the selection of a leak monitoring system. In general, the most important parameters affecting leak monitoring systems are secondary containment and groundwater depth. If secondary containment is used, the leak monitoring system can be simpler, and continuous monitoring is less important. Deep groundwater favors gas-phase detection methods, whereas shallow groundwater favors liquid-phase detection methods.

4.4 Discussion of Results

This discussion of the questionnaire sections ranges from general to specific comments.

4.4.1 Overall Results

As discussed earlier, the leak monitoring techniques fall into four categories:

- o Intermittent liquid-phase detection;
- o Intermittent gas-phase detection;
- o Continuous liquid-phase detection; and
- o Continuous gas-phase detection.

The techniques within a category tended to have similar capabilities and deficiencies. The relative advantages and disadvantages of each technique are summarized in Table 4-9. In general, the intermittent gas- and liquid-phase monitoring techniques are not only more labor intensive but also more reliable than the automated, continuous gas- and liquid-phase monitoring techniques. Gas detection is more sensitive than liquid detection, but the equipment is more complex and expensive and is more susceptible to interferences.

The survey response was better than expected in terms of the number of vendors returning completed

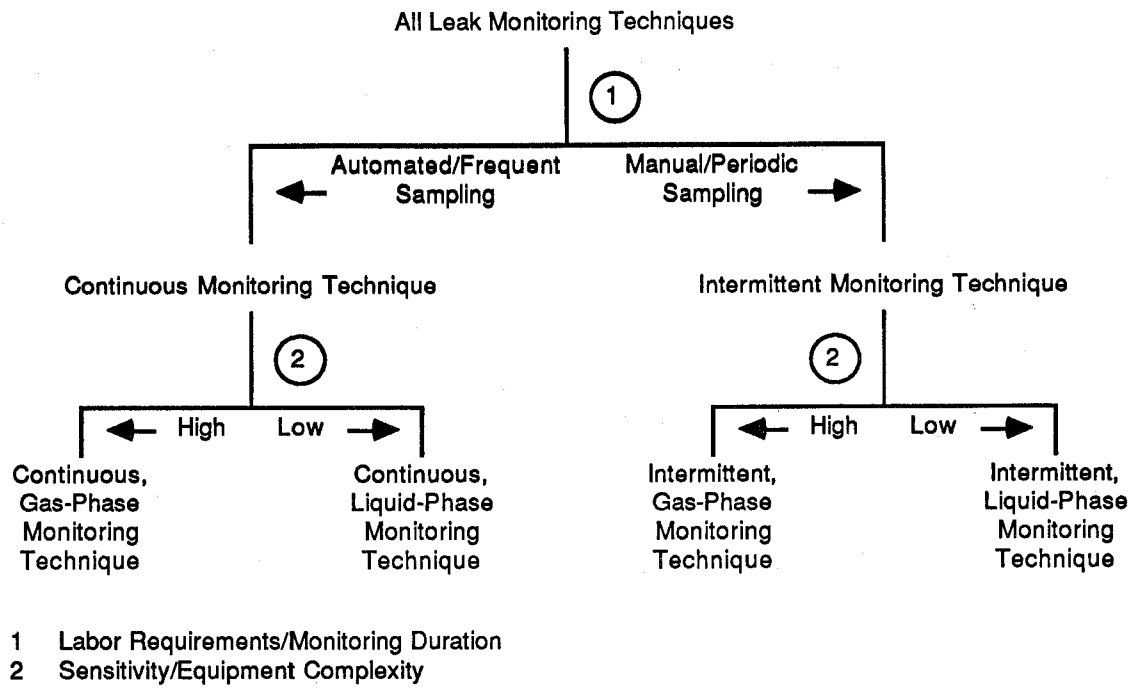

Figure 4-10
Decision Tree for Detector Classification

Table 4-8
Effect of Site-Specific Factors and Design Options on Selection of Leak Detection Methods

Variable	Options	Effect of Option on Leak Detection
System Age	New installation	None.
	Existing installation	May be difficult to retrofit leak detection capability.
Tank Type	Steel	None.
	Fiberglass	None.
	Coated steel	None.
Secondary Containment	Double-walled tank	Monitor interstitial space.
	Natural or synthetic liner	Place leak detection equipment within liner. Continuous monitoring not normally necessary.
	Concrete vault	Place leak detection equipment within vault. Continuous monitoring not normally necessary.
Overfill Protection	Yes	None.
	No	Vapor monitors may be unsuitable if frequent spills result in high background vapor concentrations.
Groundwater Depth	Deep	Use U-tube type collection sump for new installations.
	Shallow	Use one or more observation wells per excavation. Continuous monitoring recommended.
	Highly variable	Floating detectors may be unsuitable.
Excavation Type	Wet	Liquid-sensing detectors preferable to vapor-sensing detectors.
	Dry	Vapor-sensing detectors preferable to liquid-sensing detectors.
Environmental Considerations	Environmentally-sensitive area or very hazardous product	Continuous, vapor-sensing detectors recommended.

Table 4-9
Relative Advantages/Disadvantages of Leak Monitoring Techniques

Monitoring Category[a]/ Technique	Advantages	Disadvantages
Intermittent Liquid-Phase		
Chemical-sensitive paste	1 Simple, quick, and accurate 2 Inexpensive equipment	1 Does not provide continuous monitoring 2 Labor-intensive 3 Provides only limited information regarding nature of contamination
Intermittent Gas-Phase		
Combustible Gas detector	1 Inexpensive gas-phase analyzer	1 Insensitive gas-phase technique 2 Catalyst is subject to poisoning 3 Does not provide continuous monitoring 4 Labor-intensive
Detector tube	1 Inexpensive equipment	1 Does not provide continuous monitoring 2 Labor-intensive
Flame-ionization detector, Portable gas chromotograph, Infrared detector, and Photoionization detector	1 Quick, accurate, and very sensitive	1 Do not provide continuous monitoring 2 Labor-intensive 3 Expensive equipment 4 Experienced operator required 5 Not well suited for contaminated areas or areas with high background concentrations
Continuous Liquid-Phase		
Interface probe	1 Medium cost	1 Subject to biofouling
Product soluble device	1 Inexpensive equipment 2 Simple method 3 Detects vapor as well as liquid	1 Need to replace sensors every 6 months 2 Device may degrade because of background contamination, abrasion, or UV light
Thermal conductivity	1 Widely used method 2 Medium cost	1 Subject to biofouling 2 Float mechanism may fail because of ice or physical obstruction
Continuous Gas-Phase		
Catalytic sensor, Diffusion sensor, and Metal-oxide semiconductor	1 Quick, accurate, and very sensitive	1 Expensive equipment 2 Not suitable for contaminated areas or areas with high backgound concentrations 3 Catalytic sensor subject to catalyst poisoning
Product permeable device	1 Can determine magnitude and location of leak	1 Expensive equipment 2 Little user experience to date 3 Not suitable for contaminated areas or areas with high background concentrations 4 Water may cause false alarm

[a]Typical use of technique

questionnaires; however, in some cases, the quality of the responses was not acceptable. Vendors were particularly reluctant to discuss (or lacked data on) maintenance problems and false positive or negative readings. Also, in some cases, the description of typical installed costs appeared inadequate.

4.4.2 Questionnaire Results

Principle of Operation. Many vendors were unclear regarding the exact principle of operation utilized by their product. Vendor literature was necessarily used to augment the questionnaire responses.

Detection Specificity. The majority of sensors respond to vapor or liquid; only diffusion sensors and product-permeable devices respond to both. All the techniques respond to most hydrocarbons or commonly stored petroleum products. The sensors cannot be adjusted to be specific for a given product (except for gas chromatographs). However, some sensors can be adjusted to increase their specificity to a class of compounds. For example, the dissolvable component of product-soluble devices and electric resistivity sensors can be of variable thickness to vary the sensitivity. Similarly, many gas-phase detectors can be adjusted to increase their sensitivity to one class of compounds over another. A number of potential interferents were identified, and these appear to be the major cause of false positive and false negative results. In general, the impact of interferences on leak detectors is not a major problem.

Detection Capability. As expected, gas-phase detection is much more sensitive than liquid-phase detection. The response time of all techniques is less than 1 minute except for the product-soluble and product-permeable sensors which respond in less than 20 minutes. Drift, noise, precision, and applicable test procedure information was very limited. The majority of the continuous techniques permit multiple sensors to operate from a single control box. Finally, the estimated service life averaged 10 years for control boxes and about 2 years for sensors.

Experience. Thermal conductivity devices, grab samplers, and chemical-sensitive pastes are the only techniques that have been widely used for monitoring underground storage tanks. The other techniques either are new to the market or have been used in other applications. Vendor responses regarding years on the market and the number of devices in service are not limited to use of the devices for UST applications. Information regarding operating experience, maintenance problems, false negative readings, false positive readings, and repair/replacement experience was generally limited.

Cost. Costs for control box and sensors ranged from less than $100 to $14,000. Gas-phase detection systems averaged about $4,000 versus $1,500 for liquid-phase detection systems. Installation costs may be as much as $30,000, but there were limited responses to this question. Most vendors thought maintenance costs were minimal.

Recommended Procedures. In general, the various leak monitoring systems require observation wells, can be retrofitted, can operate under any soil conditions, should be located within the tank excavation, and cannot differentiate between spills and leaks. Again, it should be emphasized that these conclusions are based only on the data provided by the manufacturers. They gave only limited answers to maintenance, calibration, and certification questions. For calibration, the vendors typically responded either that none was required or that some unspecified calibration gas or gasoline was needed. Bacharach Instruments markets a calibration kit for their sensors. The general response to the question on certification was to use an unspecified gas standard. However, detailed certification procedures were given for two of the leak monitoring devices: the electrical resistivity sensor produced by Total Containment and the Adsistor sensor marketed by several vendors. In addition, Rexnord states that their catalytic sensor device can be certified by "FM #6310-6330 procedure and CSA #C22.2 No. 152 procedure." Additional testing procedure information had been solicited from vendors and testing concerns. Information collected to date is summarized in Table 4-10 and will be used in designing test procedures during future work.

Vendors typically stated that their devices cannot distinguish between surface spills and leaks. However, over time, all the leak monitoring devices may be able to do so. Presumably, a surface spill will result in a "front" of contamination moving through the soil with concentrations decreasing over time. Those devices that give a quantitative readout should show a drop in concentration over time for a spill but not for a leak. Devices that give a binary readout (alarm or non-alarm) can be reset or can have the sensing element replaced and eventually can distinguish between spills and leaks.

Table 4-10
Summary of Available Test Procedures and Results for Leak Monitors

Name	Testing Agency/ Vendor	Test Information
1. Active Leak Testing	Testing Agency	In-house testing procedures and designs (information not yet received).
2. National Swedish Institute for Materials Testing	Testing Agency	Report for Adsistor ® (1970). Tests consisted of: 1 Boundary value for gasoline 2 Relative humidity 3 Consumption 4 Tension 5 Temperature 6 Reaction time 7 Shock 8 Brine water 9 Self-sureness 10 Installation.
3. B.C. Research	Testing Agency	No additional testing data. References were sent for further contacts.
4. Bacharach	Vendor	F.M. and C.S.A. are contracted to test their detectors. Contacts for both and F.M. reports were received.[a]
5. C.S.A.	Testing Agency	Test procedures pertaining to gasoline vapor detectors (not yet received).
6. Fire Marshall, Campbell, CA	Inspection Agency	Monitoring standards for Santa Clara and inspection checklist were received.
7. EMMCO	Vendor/R&D	Sensor operations information.
8. Genelco	Vendor	Soil cell designs, vapor sensor testing consisting of: 1 Frequency 2 Location 3 Calibration 4 Installation 5 Site Evaluation.
9. Factory Mutual (F.M.)	Testing Agency	Approval standards for combustible gas detectors. Discussed are the following: 1 Detector construction 2 Marketing (labeling) 3 Tests performed 4 Apparatus and test procedures
10. In-Situ	Vendor	In-house testing procedures and specifications along with draft test results. Testing considered response time for liquid and vapor detection.
11. Pollulert Systems	Vendor	In-house lab and field test results.
12. Universal Sensors and Devices, Inc.	Vendor	Soil cell tests for measuring diffusion rate.

[a]F.M. reports are proprietary information

SECTION 5
References

1. Jeyapalan, J. K., and J.B. Hutchison. Underground Storage Tanks--Leak Prevention, Leak Detection, and Design.

2. Hazardous Waste Report--Trends & Analyses. The Next Regulatory Battle: Leaking Underground Storage Tanks, May 1984.

3. Predpall, D. F., W. Rogers, and A. Lamont. An Underground Tank Spill Prevention Program. In: Proceedings of Petroleum Hydrocarbons and Organic Chemicals in Ground Water, Houston, Texas, November 1984. pp. 17-32.

4. Marketer's Report of the Texas Oil Marketers Association. Why Be Concerned about Underground Storage Tanks? June 1985.

5. The Hazardous and Solid Waste Amendments of 1984 to the Resource Conservation and Recovery Act, Subtitle 1, Sections 9001-9010 of U.S. Public Law 98-616, November 1984.

6. Scheinfeld, R. A., and T. G. Schwendeman. The Monitoring of Underground Storage Tanks--Current Technology. In: Proceedings of Petroleum Hydrocarbons and Organic Chemicals in Ground Water, Houston, Texas, November 1985.

7. Eklund, B. Evaluation of Methods for Leak Detection in Underground Storage Tanks and Connected Piping. In: Proceedings of the Air Pollution Control Association's 79th Annual Meeting and Exhibition, Minneapolis, Minnesota, June 1986.

8. Horiba Engineering IR Hydrocarbon Gas Analyzer Product Literature.

9. HNU Model PI 101 Product Literature.

10. Pollulert Systems FD102 Thermal Conductivity Sensor Product Literature.

11. Teledyne Geotech LASP System Product Literature.

SECTION 6
Bibliography

This section contains a selected bibliography of general references and a listing of other pertinent citations from the literature search.

6.1 Selected Bibliography

Leak Monitoring

American Petroleum Institute. Observation Wells as Leak Monitoring Techniques. Unpublished Draft Report, Washington, D.C. 1986.

Donaghey, L. F. Groundwater Protection through Early Detection of Hydrocarbon Leaks. In: Proceedings of Oil Spill Prevention, Behavior, Control, and Cleanup Conference, Los Angeles, California, February 1985, Washington, D.C., American Petroleum Institute. pp. 263-65.

Eklund, A. G., and B. M. Eklund. Integrity Test and Leak Detection for Underground Storage Tanks. Edison Electric Institute. 1986.

Eklund, B. Evaluation of Methods for Leak Detection in Underground Storage Tanks and Connected Piping. In: Proceedings of the Air Pollution Control Association's 79th Annual Meeting and Exhibition, Minneapolis, Minnesota. June 1986.

Lu, J., and W. Barcikowski. Cost-Effectiveness Evaluation of Leak Detection and Monitoring Technologies for Leaking Underground Storage Tanks. In: Proceedings of the National Conference on Hazardous Wastes and Hazardous Materials, Atlanta, Georgia. March 1986.

Petroleum Equipment Institute. 1986 Petroleum Equipment Directory. PEI. 1986.

Scheinfeld, R. A., J. B. Robertson, and T. G. Schwendeman. Underground Storage Tank Monitoring: Observation Well Based Systems. Ground Water Monitoring Review. Fall 1986.

The New York State Department of Environmental Conservation. Technology for the Storage of Hazardous Liquids. March 1985.

van Ee, J. J. New Approaches to the Evaluation of Leak Detection Monitors for Underground Storage Tanks. In: Proceedings of the API/NWWA Petroleum Hydrocarbons and Organic Chemicals in Ground Water Conference, Houston, Texas. November 1986.

Related Topics: Design, Installation, Operations, Regulations, and Integrity Testing

American Petroleum Institute. Installation of Underground Petroleum Storage Systems. API Publication 1615. November 1979.

American Petroleum Institute. Recommended Practice for Bulk Liquid Stock Control at Retail Outlets. API Publication Number 1621. 1977.

American Petroleum Institute. Recommended Practice for Underground Petroleum Product Storage Systems at Marketing and Distribution Facilities. API Publication Number 1635. December 1984.

Anonymous. EPA to Examine Tank Leak Tests; Defines Many Causes of "Noise." Petroleum Marketer. September-October 1985.

Buonocore, A. O., G. F. Kotas, and K. G. Garrahan. New Requirements for Underground Storage Tanks. In: Proceedings of the National Conference on Hazardous Wastes and Hazardous Materials, Atlanta, Georgia. March 1986. pp. 246-250.

Curran, S. D. Prevention and Detection of Leaks from Underground Gasoline Storage Systems. In: Proceedings of 6th National Ground-Water Quality Symposium, Atlanta, Georgia, September 1982. National Water Well Association, Worthington, Ohio. 1983. pp. 93-100.

Heckard, M. States Crack Down on Fuel Tank Regs. Fleet Owner, Small Fleet Edition. March 1985.

Radian Corporation. State-of-the-Art Tank and Piping Technology and Installation Practices. Edison Electric Institute. 1986.

National Fire Protection Association, Inc. Underground Leakage of Flammable and Combustible Liquids. NFPA Document No. 329. June 1983.

New York State Department of Environmental Conservation. Recommended Practices for Underground Liquid Storage Systems. 1985.

New York State Department of Environmental Conservation. Technology for the Storage of Hazardous Liquids. March 1985.

Niaki, S., and J. A. Broscious. Underground Tank Leak Detection Methods: A State-of-the-Art Review. EPA Contract No. 68-02-3069, EPA/HWERL-Cin. In Press.

PACE. Underground Tank Systems: Review of State of the Art and Guidelines. PACE Report No. 82-3.

PACE. Proceedings of Underground Tank Testing Symposium, Toronto, Ontario, May 1982. Petroleum Association for Conservation of the Canadian Environment.

Petroleum Equipment Institute. Recommended Practices for Installation of Underground Liquid Storage Systems. 1985.

Tusa, W. Underground Leaks: True Corporate Costs. Pollution Engineering. February 1986.

U. S. Environmental Protection Agency. More About Leaking Underground Storage Tanks: A Background Booklet for the Chemical Advisory. EPA Office of Toxic Substances, Washington, D.C. October 1984.

Wilcox, H. K., J. D. Flora, C. L. Haile, M. J. Gabriel, and J. W. Maresca. Development of a Tank Test Method for a National Survey of Underground Storage Tanks. EPA-560/5-86-014, U. S. Environmental Protection Agency. May 1986.

Woods, P. H., and D. E. Webster. Underground Storage Tanks: Problems, Technology, and Trends, Pollution Engineering 16(7):30-40, 1984.

6.2 Additional Citations Identified in Literature Search

Adamowski, S. J., A. J. Caracciolo III, and G. D. Knowles. Underground Storage System Assessment, Testing, and Remediation. In: Proceedings of the National Conference on Hazardous Wastes and Hazardous Materials, Atlanta, Georgia. March 1986. pp. 269-272.

Adams, T. E. Hydrocarbon Leakage Detection System and Apparatus. Canadian Patent No. 1,185,693. October 28, 1985.

Ainlay, J. A. Leak Detector for Underground Storage Tanks. U. S. Patent No. 4,474,054. October 2, 1984.

American Petroleum Institute. Cathodic Protection of Underground Petroleum Storage Tanks and Piping Systems. API Publication 1632. 1983.

American Petroleum Institute. Recommended Practice for Abandonment or Removal of Used Underground Service Station Tanks. API Publication 1604. March 1981.

American Petroleum Institute. Recommended Practice for the Interior Lining of Existing Underground Storage Tanks. API Publication 1631. 1983.

American Petroleum Institute. Tank and Piping Leak Survey. February 1981.

American Petroleum Institute. Underground Spill Cleanup Manual. API Publication 1628. June 1980.

Anonymous. API, EPA Study Hydrocarbon Detection for Underground Tank Monitoring Wells. Petroleum Marketer. May-June 1986. pp. 10-18.

Anonymous. A Problem that Won't Go Away. National Petroleum News. September 1985. pp. 31-35.

Anonymous. Choosing a Compatible Underground Storage Tank. The Hazardous Waste Consultant. September-October 1986. pp. 1-14 to 1-17.

Anonymous. Data on Leaking Underground Storage Tanks Presented in EPA Study. The Hazardous Waste Consultant. November-December 1986. pp. 2-22 to 2-25.

Anonymous. Florida Finalizes Rules Regarding Tank Leaks, Is Second State to Act. National Petroleum News. June 1984. p.63.

Anonymous. How Hazardous Waste Tanks Fail. The Hazardous Waste Consultant. July-August 1986. pp. 1-6 to 109.

Anonymous. Petro-Tite Evolves to Find Leaking Tanks. Petroleum Marketer. November-December 1985.

Anonymous. Reliable On-Line Monitoring for Better Effluent Control. Process Eng., 73:74-75, May 1980.

Anonymous. Small Jobbers Endangered, Study Predicts; Tank Leak Mess Already is Wounding Some. National Petroleum News. March 1984.

Anonymous. Sohio Keeps Watch on Underground Tanks. Ground Water Monitoring Review. Winter 1986. p.14.

Anonymous. System Detects Underground Leaks. Oilweek 31(51):23-24, January 1981.

Anonymous. Tank Audit Computer Detects Leak Rates. Petroleum Marketer. May-June 1986. pp.41-43.

Anonymous. Underground Storage Tanks: Secondary Containment Methods Described. The Hazardous Waste Consultant. November-December, 1985. pp. 1-28 to 1-31.

Askenaizer, D. J., W. Barcikowski, K. V. B. Jennings, and J. E. Sarna. Development of a Compliance Program for Underground Tanks Containing Hazardous Substances. Report to Southern California Edison Co., Contract No. 2742915. March 1985.

B. C. Research. Report on Investigations and Research to Develop a Service Station Underground Tank Leak Detector. Petroleum Association for Conservation of the Canadian Environment (PACE), Report No. 81-3.

Bisque, R. E. Migration Rates of Volatiles from Buried Hydrocarbon Sources through Soil Media. In: Proceedings of the NWWA/API Petroleum Hydrocarbons and Organic Chemicals in Ground Water Conference, Houston, Texas. November 1984.

Blevins, M. L., and D. E. Williams. Management of Gasoline Leaks--A Positive Outlook. In: Innovative Means of Dealing with Potential Sources of Ground Water Contamination; Proceedings of the 7th National Ground Water Quality Symposium, Las Vegas, Nevada, September 1984. pp. 46-83. Published by NWWA, Worthington, Ohio. 1985.

Cheremisinoff, P. N., J. G. Casana, and H. W. Pritchard. Special Report: Update on Underground Tanks. Pollution Engineering. August 1986.

Cheremisinoff, P. N., J. G. Casana, and R. P. Ouellette. Special Report: Underground Storage Tank Control. Pollution Engineering. February 1986.

Dowd, R. M. Leaking Underground Storage Tanks. Environmental Science and Technology. 18(10), 1984.

Dragun, J., A. C. Kuffner, and R. W. Schneiter. Transport and Transformations of Organic Chemicals. Chem. Eng., 91(24):65-72, 1984.

Eklund, B. Detection of Hydrocarbons in Groundwater by Analysis of Shallow Soil Gas/Vapor. API Publication No. 4394. May 1985.

Everett, L. G., E. W. Hoylman, L. G. Wilson, and L. G. McMillion. Constraints and Categories of Vadose Zone Monitoring Devices. Ground Water Monitoring Review 4(1):26-32, Winter 1984.

Fletcher, S. Leaks in Storage Tanks Polluting Groundwater. Houston Post. December 1985.

Gerstenmaier, W. J., and J. A. Todd. Leak Detection Systems and Method for Fluid Delivery Piping. U.S. Patent No. 4,131,216. December 26, 1978.

Guest, R. J. Leak Detector and Method. U.S. Patent No. 3,691,819. September 19, 1972.

Hazardous Waste Report--Trends & Analyses. The Next Regulatory Battle: Leaking Underground Storage Tanks. May 1984.

Hern, S. C., and S. M. Melancon. Vadose Zone Modeling of Organic Pollutants. Lewis Publishers, Inc. 1986.

Holck, J. N., and T. P. Clark. Regulation of Underground Storage Tanks in Minnesota. In: Proceedings of the 79th Annual Meeting of the Air Pollution Control Association. Minneapolis, Minnesota. June 1986.

Horsley, S. W., and D. S. Blackmar. Development and Implementation of Regulations to Control Underground Fuel Storage Tanks on Cape Cod. In: Proceedings of the 7th National Ground-Water Quality Symposium, Las Vegas, Nevada, September 1984. National Water Well Association, Worthington, Ohio. 1985. pp. 29-39.

Hubbard, G. O. Locating Holes in Tubing. U. S. Patent No. 3,696,660. October 10, 1972.

Huebler, J. E., and J. M. Craig. Sonic Detection of Gas Leaks in Underground Pipes. U.S. Patent No. 4,455,863. June 26, 1984.

Jeyapalan, J. K., and J.B. Hutchison. Underground Storage Tanks--Leak Prevention, Leak Detection, and Design. In: Proceedings of the National Conference on Hazardous Wastes and Hazardous Materials, Atlanta, Georgia. March 1986.

Kahn, E. Proposal Gives Muscle to EPA on Underground Tank Rules. Super Service Station. April 1984.

Knopp, P. V. Underground Tank Management. Pollution Engineering. December 1985. pp. 24-27.

Lund, T. Corrosion of Underground Storage Tanks. Presented at HazPro '86, Baltimore, Maryland. April 1986. Sponsored by Pollution Engineering.

Maresca Jr., J. W., P. C. Evans, R. A. Padden, and R. E. Wanner. Measurement of Small Leaks in Underground Gasoline Storage Tanks Using Laser Interferometry. SRI International Project No. 7637. September 1981.

Marketer's Report of the Texas Oil Marketers Association. Why Be Concerned about Underground Storage Tanks? June 1985.

McLean, F. R. Leak Seeking in Underground Tanks. Presented at the 43rd Annual Fire Department Instructors Conference, Kansas City, Missouri. March-April 1971.

Milanovich, F. P. Detecting Chloro-organics in Groundwater. Environ. Sci. Technol. 20(5):41-42, 1986.

Milke, G. Method of and Apparatus for Locating Leak Areas of Pipe Lines, Especially Underground Pipe Lines. U. S. Patent No. 3,722,261.

Murphy Jr., F. W., and B. G. Sparks. Remote Multiple Tank Liquid Level Measuring Device. U. S. Patent No. 4,064,752. December 27, 1977.

Nacht, S. H. Underground Storage Tank Compatibility. Presented at HazPro '86, Baltimore, Maryland. April 1986. Sponsored by Pollution Engineering.

National Fire Protection Association, Inc. Flammable and Combustible Liquids Code. NFPA Publication No. 30. 1984.

Petroleum Equipment Institute. Future Trends in Petroleum Marketing Operations. PEI Manual 8342.

Plehn, S. W. An Introduction to LUST. The Environmental Forum. July 1984. pp. 5-9.

Predpall, D. F., W. Rogers, and A. Lamont. An Underground Tank Spill Prevention Program. In: Proceedings of Petroleum Hydrocarbons and Organic Chemicals in Ground Water, Houston, Texas. November 1984. pp. 17-32.

Robbins, G. A., and M. M. Gemmell. Factoring Requiring Resolution in Installing Vadose Zone Monitoring Systems. Ground Water Monitoring Review. Summer 1985. pp. 75-80.

Robbins, R. J., and D. G. Nichols. Electric Leak Detection Systems for Underground Stored Chemicals and Fuels. In: Innovative Means of Dealing with Potential Sources of Ground Water Contamination; Proceedings of the 7th National Ground Water Quality Symposium, Las Vegas, Nevada, September 1984. pp. 40-44. Published by NWWA, Worthington, Ohio. 1985.

Scheinfeld, R. A., and T. G. Schwendeman. The Monitoring of Underground Storage Tanks--Current Technology. In: Proceedings of Petroleum Hydrocarbons and Organic Chemicals in Ground Water, Houston, Texas. November 1985.

Shaner, J. R. Underground Tank Dilemma: New Rules Could Cost Industry Billions. National Petroleum News. August 1984. pp. 36-39.

Singh, P. N. Case Study of Product Detection in Ground Water. In: Proceedings of the National Conference on Hazardous Wastes and Hazardous Materials, Atlanta, Georgia. March 1986. pp. 273-277.

Steel Tank Institute. Tank Talk. Bimonthly Newsletter (various issues).

Sun, M. EPA Grapples with Regulating Underground Storage Tanks. Science, 233:518.

Tabary, J. Underground Storage of Petroleum Products. Pet. Rev. 27(318):213-217, 1973.

The Hazardous and Solid Waste Amendments of 1984 to the Resource Conservation and Recovery Act Subtitle 1, Sections 9001-9010 of U.S. Public Law 98-616. November 1984.

Underwriters Laboratories, Inc. Glass-Fiber-Reinforced Plastic Tanks for Underground Storage of Petroleum Products. UL Publication No. 1316.

Underwriters Laboratories, Inc. Steel Underground Tanks for Flammable and Combustible Liquids. UL Publication No. 58.

Upton, H. Tulsa Letter. Petroleum Equipment Institute Weekly Newsletter (various issues).

Utility Data Institute. Preliminary Characterization of Underground Storage Tanks Utilized by Electric Utilities. December 1984.

Witherow, W. E. Epichlorohydrin in Secondary Containment Systems. In: Innovative Means of Dealing with Potential Sources of Ground Water Contamination; Proceedings of the 7th National Ground Water Quality Symposium, Las Vegas, Nevada, September 1984. pp. 89-94. Published by NWWA, Worthington, Ohio. 1985.

Wolder Engineering. Southern California Edison Underground Tank Study, Rosemead, California. Wolder Engineering Project No. B261-00. November 1985.

Young Jr., A. D. Underground Storage Tank Design State-of-the-Art for 1986. Presented at HazPro '86, Baltimore, Maryland. April 1986. Sponsored by Pollution Engineering.

APPENDIX A
List of Vendors

The following vendor list provides the address, phone number, and the name of the technical representative for each company identified in this report as a vendor of leak monitoring devices.

Table A-1
List of Vendors

Type of Detector	Company	Address	Technical Representative	Phone Number	Product Name
Liquid Sensors					
Grab Samplers					
	NEPCCO	29 Wall Street Foxboro, MA 02035	Paul Guerra	617-543-8458	Liquid Samplers and Bailers
	Norton	150 Dey Road Wayne, NJ 07470	--	201-696-4700	Bailers
	(many others)				
Chemical-Sensitive Paste					
	Kolor Kut Products	P.O. Box 5415 Houston, TX 77262	D. Frauenberger	713-926-4780	Water & Gasoline Finding Pastes
	McCabe	76 Slope Dr. Short Hills, NJ 07078	Joe McCabe	--	Water & Gasoline Indicator Pastes
Interface Probe Monitor					
	Comar, Inc.	P.O. Box 832676 Richardson, TX 75083	Bob Moorehead	214-238-7691	*Models 807, 808 & 809 Tank Monitors *PLD-17 Pipeline Monitor
	EMTEK, Inc.	27 Harvey Road Bedford, NH 03201	Herold Solomon	603-627-3131	Electronic Well Gauging (EWGL-12) Light
	Marine Moisture Control	60 Inip Dr. Inwood, NY 11696	Frank Giannone	718-327-3430 800-645-7339	Sonic Ullage Interface Probe
	Oil Recovery Systems, Inc.	220 Norwood Park S Norwood, MA 02062	Don Jones	617-769-7600	Interface Probe
Product Soluble Devices					
	EMTEK, Inc.	27 Harvey Road Bedford, NH 03102	Herold Solomon	603-627-3131	Detectron
	IFP Enterprise	680 Fifth Ave. New York, NY 10019	C.E. Maier	212-265-3800	Oil Fuse
	In-Situ, Inc.	210 S. 3rd Street Laramie, WY 82070	Phil Gerhart	307-742-8213	Petrochemical Release Monitors
	K&E Associates	3312 Industry Dr. Long Beach, CA 90806	Jim Ridle	213-424-1517	PMS-800
	Pump Engineer Associates	921 National Ave. Addison, IL 60101	Matt Vetter	312-543-2214	Sentinel
	Technology 2000, Inc.	265 Ballardvale St. Wilmington, MA 01887	Donald Corey	617-658-2900	TOLTECH Hydrocarbon Monitor
Electrical Resistivity Sensors					
	Control Devices	2009-A West Detroit St. Broken Arrow, OK 74012	Anthony Farque	918-251-0387	Wik-Stik
	Total Containment	15 E. Uwchlan Ave. Exton, PA 19341	Mike Webb	215-524-9274	Total Containment Cable-TC3000

List of Vendors

Type of Detector	Company	Address	Technical Representative	Phone Number	Product Name
Thermal Conductivity Devices					
	FCI	1755 LaCosta Meadows San Marcos, CA 92069	Malcolm McQueen	800-854-1993 615-744-6950	785 Leak Detection Systems
	Leak-X	560 Sylvan Ave. Englewood Cliff, NJ 07632	Bill Gelles	201-569-8989	Leak-X System
	Oil Recovery Systems, Inc.	220 Norwood Park South Norwood, MA 02062	Don Jones	617-769-7600	CMS Variable Level System
	Pollulert Systems (Mallory)	P.O. Box 706 Indianapolis, IN 46206	Wayne Pate	317-636-5353	FD102 and FD103
	Universal Sensors and Devices, Inc.	9205 Alabama Ave, Unit C Chatsworth, CA 91311	Wen Young	818-998-7121	Leak Alert System
Vapor Sensors					
Detector Tubers					
	MSA	10770 Moss Ridge Rd. Houston, TX 77043	Patrick Kramer	713-690-6268 800-672-2222	Samplair Pump & Test Kit
	National Draeger, Inc.	P.O. Box 120 Pittsburgh, PA 15230	Robert Dusch	412-787-8383	Gas & Vapor Detection Products
Combustible Gas Detectors					
	MSA	P.O. Box 426 Pittsburgh, PA 15230	Bruce Herman	412-967-3000 800-672-2222	Several models
Catalytic Sensor Devices					
	Bacharach Instrument Inc.	625 Alpha Drive Pittsburgh, PA 15238	Bill Milon	412-963-2235	*TLV Sniffer *Model 303 *Model H Gaspointer
	Gas Tech, Inc.	8445 Central Ave. Newark, CA 94560	Bruce Holcom	415-794-6200	Model 1238
	Industrial Scientific Devices Corp.	355 Steubenville Pike Oakdale, PA 15071	Dave Kulawa	412-788-4353	LD-222
	Intek Corp.	10410 Rockley Rd. Houston, TX 77099	Ken Konrad	713-498-5855	IGD
	Lumidor Safety Products	5364 NW 167th St. Miami, Florida 33014	Norman Burnell	305-625-6511	Model CRP-1
	Rexnord Gas Detection Products	207 East Java Dr. P.O. Box 3566 Sunnyvale, CA 94088	Greg Chambers	408-734-1221	Combustible Gas Detection System

List of Vendors

Type of Detector	Company	Address	Technical Representative	Phone Number	Product Name
Metal Oxide Semiconductors					
	API/Ronan	12410 Benedict Ave. Downey, CA 90242	Matt Thomas	--	TRS 76
	Armstrong Monitoring	215 Colonade Rd. South Nepean, Ontario Canada K2E 7K3	Bill Armstrong	--	4200 Sensor
	Azonic Technology Corp.	1671 Mabury Road San Jose, CA 95133	Tom Gregory	408-729-4900	Enviro-Ranger
	Calibrated Instrument, Inc.	731 Saw Mill River Rd. Ardsley, NY 10502	John Mann	914-693-9232	Pure Air Monitor
	Enmet Corp.	2308 S. Industrial Hwy. Ann Arbor, MI 48104	Elwood Boous	313-761-1270	Several models
	Genelco, Inc.	11649 Chairman Dr. Dallas, TX 75243	Michael Bouton	214-341-8410	Soil Sentry
	Harco Corp.	1216 E. Tower Rd. Schaumberg, IL 60195	--	312-882-3777	Multi Ram 12
	International Sensor Tech.	17771 Fitch St. Irvine, CA 92714	John Krell	714-863-9999	AG5000 & AG5100
	MSA	600 Penn Center Blvd. Pittsburgh, PA 15235	Steve Long	412-776-8802	Tankgard
	Oil Recovery Systems, Inc.	220 Norwood Park South Norwood, MA 02062	Don Jones	617-769-7600	Vapor CMS
	Sierra Monitor	1991 Tarob Court Milpitas, CA 95035	Cathy Daigle	408-262-6611	Model 201
	Universal Sensors and Devices, Inc.	9205 Alabama Ave., Unit C Chatsworth, CA 91311	Wen S. Young	818-998-7121	Leak Alert
	U.S. Industrial Products Co.	13564 Pumice St. Norwalk, CA 90650	Samuel S. Wu	213-921-4342	Tank Monitor
Product Permeable Devices					
	Teledyne Geotech	3401 Shiloh Road Garland, TX 75041	Philip Swiger	214-271-2561	LASP System
	W.L. Gore	1505 N. 4th St. Flagstaff, AZ 86002	Art Molina	602-526-1290	LEAKLEARN
Diffusion Sensors					
	Adsistor Technology	11300 N.E. 25th St. P.O. Box 98115 Seattle, WA 98125	James Dolan	206-523-6468	Adsistor Sensor
	Emco Wheaton	Chamberlain Rd. Conneaut, OH 44030	Chris Schauerman	216-599-8151	Leak Sensor II Vapor Probe

List of Vendors

Type of Detector	Company	Address	Technical Representative	Phone Number	Product Name
Diffusion Sensors (cont.)					
	EMMCO Enterprises	2525 Lehigh Pl. Costa Mesa, CA 92626	Tom Meany	714-545-6030	Env. Control Safety Monitoring System
	Spearhead Tech., Inc.	P.O. Box 51160 Seattle, WA 98115	Bill Michaluk	604-688-8245	STI 2X12 Inground Tank Monitor
PIDs	AID, Inc.	Rt. 41 & Newark Rd. Avondale, PA 19311	Chuck Sarnoski	215-268-3181	Model 580
	Astro Resources	100 Park Ave. League City, TX 77573	Phil Landon	713-332-2484	Trace Gas Analyzer-1010
	HNU	160 Charlemont St. Newton Highlands, MA 02161	Omar Gendron	617-964-6690	Model PI 101
	Photovac, Inc.	741 Park Ave. Huntington, NY 11743	Richard Smyth	516-351-5809	*TIP *Underground Tank Monitor
Portable GCs	AID, Inc.	Rt. 41 & Newark Rd. Avondale, PA 19311	Chuck Sarnoski	215-268-3181	Model 590
	HNU	160 Charlemont St. Newton Highlands, MA 02161	Bob Pelletier	617-964-6690	Models 201, 301D and 501
	Microsensor Technology Inc.	41762 Christy St. Fremont, CA 94538	Bob Turner	415-490-0900	Michromonitor
	Photovac, Inc.	739B Park Ave. Long Island, NY 11743	Richard Smyth	516-351-5809	Photovac 10A10
	Sentex Sensing Tech., Inc.	553 Broad Ave. Ridgefield, NJ 07657	Donna Ianuzzi	201-945-3694	Scentor
	XON Tech	6862 Hayvenhurst Ave. Van Nuys, CA 91406	Matt Young	818-787-7380	GC-810
FIDs	Foxboro Analytical	330 Neponset Ave. Foxboro, MA 02035	Wendy Cotrell	617-543-8750	Century OVA
Infrared	Foxboro Analytical	330 Neponset Ave. Foxboro, MA 02035	Wendy Cotrell	617-543-8750	Miran
	Horiba Engineering	121 Duryea Ave. Irvine, CA 92714	Debbie Berardino	800-446-7422	IR Hydrocarbon Gas Analyzer

APPENDIX B
Questionnaire Format

Following is an example of the questionnaire format sent to the vendors requesting information on leak monitoring devices.

Survey of Leak Detection Systems for Use With Underground Storage Tanks

Company _____

Leak Detection Product _____

_____

Name of Person Completing Form _____

Title _____ Phone # (____) ____ _____

1. **Describe the Principle of Operation of your leak detector.**

_____

_____

_____

_____

_____

2. **Detection Specification**

2a. Does sensor respond to vapor, liquid or both?_____

Any Limitations?_____

_____

2b. Does the sensor detect gasoline, diesel fuel, chlorinated solvents, other hydrocarbon products, and non-hydrocarbon products?_____

_____

2c. Can the sensor be adjusted to be specific for a given product? _____

How is this done?_____

_____

2d. What interferents can affect results? Water vapor, methane, sulfur compounds, carbon dioxide, carbon monoxide, oxygen, stray electrical current, other (list).

_____

Can interferences cause false positives, false negatives, or both? _____

_____

Rate the severity of any interferences_____

_____

3. **Detection Capability** (please specify units)

3a. Lower detection limit (sensitivity) _____
Can the sensitivity be adjusted, and if so, what is the range?

_____

3b. Upper detection limit _____

_____

3c. Response Time_____

Lag Time _____
Rise Time _____
Fall Time _____

Limitations (e.g., temperature) and their effect? _____

_____

3d. Drift _____

3e. Noise _____

3f. Precision _____

3g. What test procedures were used to test for the above parameters? _____

_____

_____

_____

3h. How many sensors can operate from a single control box? _____

3i. How often and for how long is each sensor on-line? _____

_____

3j. Service Life of control box? _____ Sensors? _____

4. **Experience**

4a. Is leak detector presently being marketed? _____
If yes, for how many years? _____

4b. How many of your detection systems are now in service?_____

4c. Has an actual leak ever been detected? _____

4d. Describe the operating experience of system users. _____

_____

_____

Potential maintenance problems (e.g., ice in well, electrical malfunction sensor deterioration)

_____

_____

_____

Cause and frequency of false negative readings?_____

_____

_____

Cause and frequency of false positive readings? _____

_____

_____

Estimate and Describe repair/replacement experience for control boxes and sensors (if applicable)

_____

_____

5. Cost Information

5a. Capital cost of control box _____

5b. Capital cost per sensor _____

5c. Installation cost of system for: (assume 4-tank facility)

New facility _____

Old facility _____

Existing monitoring well _____

5d. Maintenance cost _____

6. Recommended Procedures

6a. Describe installation procedures. _____

_____

_____

_____

_____

6b. Is it necessary to install observation wells to use the detector? _____

6c. Can the leak detection system be retrofitted to existing facilities? _____

6d. Are site characterization studies prior to installation necessary/recommended?_____

6e. What type of utility service is required for installation and operation of the leak detection system?

_____

_____

6f. Where should the leak detector be placed in relation to the tank? _____

_____

_____

6g. What distance should separate sensors from the tank and each other? _____

_____

6h. How many sensors should be used per tank/excavation? _____

_____

6i. Describe calibration procedures to be performed at time of installation. _____

_____

_____

6j. What instrument settings are adjusted at time of installation (e.g., background adjustments)?

_____

Describe how and why this is done. _____

_____

_____

6k. Can the system be operated in unsaturated, saturated (wet), and/or intermittent (saturated or unsaturated) soil condition? Specify!

_____

_____

6l. Describe operating procedures. _____

_____

_____

_____

6m. Describe recommended operating environment (e.g., non-explosive atmosphere).

_____

_____

Give allowable operating ranges for temperature, input voltage, etc. _____

_____

6n. Maintenance requirements? _____

_____

6o. Maintenance schedule? _____

_____

6p. Calibration procedures? _____

_____

6q. Calibration schedule? _____

_____

6r. Recommended sample flow rate and allowable variability? _____

_____

6s. Is there any method to certify the performance of the system? _____ If yes, include representative certification data and discuss how base-line values for certification were established.

_____

_____

_____

6t. Describe if and how the leak detect system differentiates between surface spills and underground leaks.

_____

_____

_____

Please return completed survey form in the envelope provided to:

Radian Corporation
P.O. Box 9948
Austin, TX 78766
Attn: Mr. Bart Eklund (3)

Please direct any questions or comments to:

Mr. Bart Eklund (512) 454-4797
Mr. Walt Crow (512) 454-4797

APPENDIX C
Tabulated Survey Results

C.1 Tabulated Results From Survey

The survey responses have been tabulated following the format of the questionnaire. The tables give the response from each vendor for each type of device. Results were summarized in Section 3. Where the vendor left a question blank on the survey form, the term "No Response" or "N/R" is listed in the tables. Where the answer provided by the vendor was too lengthy or complicated to be tabulated, the term "Given" is listed in the Tables C-1 through C-6. Where vendors responded with multiple questionnaires describing similar products based on the same principle of operation, answers are given for the most suitable gas leak detector (i.e., the most sensitive or the least expensive). Products and companies listed in Table 3-1 as not having submitted a survey form are omitted from these tables.

The estimated costs associated with each leak monitoring technique derived from the vendor responses are given in Table C-5. The installation costs provided by vendors are thought not to be based on uniform assumptions and therefore should not be directly compared. Costs of well drilling, labor, utility service, cable, etc., seem not to be addressed by some vendors.

Table C-1
Vendor Responses for Principle of Operation of Leak Monitoring Techniques

Type of Detector	Company	Principle of Operation
Continuous Liquid-Phase		
Interface Probes	Comar, Inc.	Fiber optic sensor
Product Soluble Devices	EMTEK, Inc.	Softening of hydrocarbon-sensitive material/float-switch
	In-Situ, Inc.	Destruction of sensing element by petrochemical/electrical contact
	K&E Associates	Combined control system
	Technology 2000, Inc.	Softening of hydrocarbon-sensitive material/float-switch
Electrical Resistivity	Total Containment	Deterioration of dielectric insulation on twisted pair of woven conductors
Thermal Conductivity	Leak-X	Conduction
	Pollulert Systems (Mallory)	AC Conductivity
	Universal Sensors & Devices, Inc.	Thermal cooling
Intermittent Gas-Phase		
Portable GC's	AID, Inc.	Photoionization
	HNU	Photoionization
	Photovac, Inc.	Photoionization
	XON Tech	GC/Electron capture detector
Infrared	Horiba Engineering	Non-dispersive infrared analysis
PID's	AID, Inc.	Photoionization
	Astro Resources Int.	Photoionization
	HNU	Photoionization
	Photovac, Inc.	Photoionization
Continuous Gas-Phase		
Catalytic Sensors	Bacharach Instrument Co.	Catalytic combustion of explosive vapors on a platinum coated bead
	Industrial Scientific Devices	Catalytic bead platinum wire combustible sensor with wheatstone bridge
	Intek Corp.	Catalytic combustion of hydrocarbon vapors
	Rexnord Gas Detection Products	Catalytic bead type combustible gas detection system
Diffusion	Adsistor Technology	Adsorption sensor
	Emco Wheaton	Adsorption sensor
	EMMCO Enterprises	Physicochemical adsorption
	Spearhead Tech., Inc.	Adsorption sensor
Metal Oxide Semiconductors	Armstrong Monitoring	Chemical absorption on semiconductor material
	Azonic Technology,Inc.	Bulk semiconductor vapor sensor
	Calibrated Instrument, Inc.	Taguchi cell (metal-oxide semiconductor)
	Genelco, Inc.	Aspirated vapor sensor
	MSA	Metal-oxide semiconductor sensor
	Universal Sensors and Devices, Inc.	Metal-oxide semiconductor sensor
	U.S. Industrial Products	Solid-state sensor
Product Permeable Devices	Teledyne Geotech	Gas permeable cable, pump, and metal-oxide semiconductor

Table C-2
Vendor Responses for Detection Specificity of Leak Monitoring Techniques

Type of Detector	Company	Detects Gas	Detects Liquid	Type of Compound Detected	Detection Adjustable For Specific Compounds	Potential Inter-ferences	False Positive or Negatives	Severity of Interferents
Continous Liquid-Phase								
Interface Probes	Comar, Inc.	No	Yes	Hydrocarbons	No	None	No	n/a
Product Soluble Devices	EMTEK, Inc.	No	Yes	<M.W. of 18	No	None	n/a	n/a
	In-Situ, Inc.	Yes	Yes	Hydrocarbons	Yes	None	n/a	n/a
	K&E Assoc.	Yes	Yes	Hydrocarbons	Yes	None	Pos.	Minor
	Technology 2000, Inc.	No	Yes	Hydrocarbons	No	None	No	n/a
Electrical Resistivity	Total Containment	Yes	Yes	Hydrocarbons	No	None	No	n/a
Thermal Conduc-tivity	Leak-X	No	Yes	Hydrocarbons	No	H_2O,S	Yes	Very rare
	Pollulert Systems (Mallory)	Yes	Yes	Hydrocarbons	No	CH_4,H_2S	Both	--
	Universal Sensors & Devices, Inc.[a]	No	Yes	Hydrocarbons	No	CH_4,CO	Pos.	No Response
Intermittent Gas-Phase								
Portable GC's	AID, Inc.	Yes	No	Hydrocarbons	Yes	None	No	n/r
	HNU	Yes	No	Hydrocarbons	Yes	Application Dependent	Yes	Application Dependent
	Photovac, Inc.	Yes	No	Hydrocarbons	Yes	None	No	n/r
	XON Tech	Yes	Yes	Hydrocarbons (limited)	Yes	O_2	Pos.	Low
Infrared	Horiba Engineering	Yes	No	Hydrocarbons	Yes	Variable	Pos.	Variable
PID's	AID, Inc.	Yes	No	Hydrocarbons	No	Sulfur Compounds	Pos.	Application Dependent
	Astro Resources Int.	Yes	No	Hydrocarbons	No	List	Pos.	n/r
	HNU	Yes	No	Hydrocarbons	Yes	Application Dependent	Yes	Application Dependent
	Photovac, Inc.	Yes	No	Hydrocarbons	Yes	None	Pos.	Could be a Problem

[a] The questionnaire returned by Universal gave a combined answer for both their thermal conductivity sensor and their metal-oxide semiconductor sensor. The stated values are repeated in the table for both types of sensor.

Table C-2
Vendor Responses for Detection Specificity of Leak Monitoring Techniques (Continued)

Type of Detector	Company	Detects Gas	Detects Liquid	Type of Compound Detected	Detection Adjustable For Specific Compounds	Potential Inter-ferences	False Positive or Negatives	Severity of Interferents
Continuous Gas-Phase								
Catalytic Sensor	Bacharach Instrument Co.	Yes	No	Hydrocarbons	No	H_2O,CH_4, CO_2,CO, O_2,S	Both	Only if <10% O2
	Industrial Scientific Devices	Yes	No	Hydrocarbons	No	Pb,Si,S,O_2	Both	Variable
	Intek Corp.	Yes	No	HCs, H_2, NH_3	No	Si,Esters, Phosphates	Both	Variable
	Rexnord Gas Detection Products	Yes	No	Hydrocarbons	Yes	HO,Cl	Both	n/a
Diffusion	Adsistor Technology	Yes	Yes	Hydrocarbons	Yes	None	None	Gas Dis-placement
	Emco Wheaton	Yes	Yes	Hydrocarbons, Acetone	No	H_2S	n/a	Given
	EMMCO Enterprises	Yes	Yes	Hydrocarbons	Yes	None	None	n/a
	Spearhead. Tech., Inc.	Yes	Yes	Given	Yes	None	No	None
Metal Oxide Semicon-ductors	Armstrong Monitoring	Yes	No	Hydrocarbons	No	CH_4,S	Pos.	Only at Explosive Levels
	Azonic Tech., Inc.	Yes	Yes	Given	Yes	CH_4, H_2O	Both	Temporary
	Calibrated Ins., Inc.	Yes	No	Hydrocarbons	No	CH_4, H_2O	Pos.	Given
	Genelco, Inc.	Yes	No	Hydrocarbons	No	CH_4,CO	Neg.	Not Specified
	MSA	Yes	No	Hydrocarbons	No	CH_4,S,CO	Pos.	Normally low
	Universal Sensors & Devices, Inc.[a]	No	Yes	Hydrocarbons	No	CH_4,CO	Pos.	n/r
	U.S. Industrial Products Co.	Yes	No	Hydrocarbons	Somewhat	Sulfur Compounds	Pos.	Minimal
Product Permeable Devices	Teledyne Geotech	Yes	No	Hydrocarbons	No	None	Yes	n/r

a The questionnaire returned by Universal gave a combined answer for both their thermal conductivity sensor and their metal-oxide semiconductor sensor. The stated values are repeated in the table for both types of sensor.

Table C-3
Vendor Responses for Detection Capability of Leak Monitoring Techniques

Type of Detector/ Company	Detection Limit			Sensors Per Control Box	On-Line Time	Service Control Box	Life Sensors
	Lower	Adjustable	Upper				
Continuous Liquid-Phase							
Interface Probe							
Comar, Inc.	1 Qt.	No	None	4	Continuous	>3 Yrs.	>5 Yrs.
Product Soluble Devices							
EMTEK, Inc.	<0.25 in.	No	None	10	Continuous Leak	Indefinite	Until Detect
In-Situ, Inc.	3.4mg/L Vap. .079 mm Liq.	Yes	Unlimited	4	Continuous	>20 Yrs.	>20 Yrs.
K&E Assoc.	100 ppm	Yes	5,000 ppm	15	Continuous	7.5 Yrs.	12 Yrs.
Technology 2000, Inc.	1/64 in.	No	None	4	Continuous	5 Yrs.	Inspect Annually
Electrical Resistivity							
Total Containment	n/a	Yes	n/a	25 miles of cable	Continuous	Indefinite	Indefinite
ThermalConductivity							
Leak-X	5/8 in.	Yes	8 ft.	10	Continuous	3 Yrs.	2 Yrs.
Pollulert Systems (Mallory)	1/8 in.(liq) 100 ppm(gas)	Yes	2 in. or 5,000 ppm	10-15	Continuous (warrant)	1 Yr.	Many Yrs.
Universal Sensors & Devices, Inc.	200 ppm	No	7,500 ppm	8-32	Continuous	>5 Yrs.	>8 Yrs.
Intermittent Gas-Phase							
Portable GC's							
AID, Inc.	10 ppb	No	2,000 ppm	1	Continuous	Not known	10,000 Hrs.
HNU	.001-1 ppm	Yes	1.5-150 ppt	1	Continuous	>5 Yrs.	>5 Yrs.
Photovac, Inc.	1 ppb	Yes	500 ppm	1	n/a	5-10 Yrs.	18 MO.
XON Tech	Variable	Yes	Variable	n/a	n/a	n/a	n/a
Infrared							
Horiba Engineering	0-50 ppm	Yes	100%	1	Continuous	Indefinite	Indefinite
PID's							
AID, Inc.	0.1 ppm	No	20,000 ppm	1	n/r	Not known	10,000 Hrs.
Astro Resources Int.	0.1 ppm	n/r	999.9 ppm	1	Continuous	Unavailable	2 yrs.
HNU	.001-1 ppm	Yes	1.5-150 ppt	1	Continuous	>5 Yrs.	>5 Yrs.
Photovac, Inc.	0.05 ppm	Yes	20,000 ppm	32	4@ (15sec/hr.)	5-10 Yrs.	1 Yr.

Table C-3
Vendor Responses for Detection
Capability of Leak Monitoring Techniques (continued)

Type of Detector/ Company	Detection Limit			Sensors Per Control Box	On-Line Time	Service Control Box	Life Sensors
	Lower	Adjustable	Upper				
Continuous Gas-Phase							
Catalytic Sensors							
Bacharach Instrument	50 ppm	No	2,000 ppm	1	Intermittent	Indefinite	>1 Yr.
Industrial Scientific	0% LEL	n/r	100 % Lel	n/a	n/a	n/a	1 Yr.
Intek Corp.	0.1% HC	No	LFL	4	Continuous	n/a	1-10 Yrs.
Rexnord Gas Detection Products	5% LFL	Yes	LFL	1-8	Continuous	10 Yrs.	2-3 Yrs.
Diffusion Sensors							
Adsistor Technology	100 ppm	Yes	100%	No limit	u/sec	n/r	>10 Yrs.
Emco Wheaton	100 ppm	Yes	100%	16	Continuous	10 Yrs.	>10 Yrs.
EMMCO Enterprises	List	Yes	Pure liquid	10	Continuous	Indefinite	Indefinite
Spearhead Tech., Inc.	100 ppm	Yes	100% Conc.	4 or 12	Continuous	10 Yrs.	>10 Yrs.
Metal Oxide Semi-Conductors							
Armstrong Monitoring	ppm Range	Yes	Lower %'s	12	Continuous	20 Yrs.	10 Yrs.
Azonic Technology	10-20 ppm Gasoline	Yes	8,000 ppm	1	32 min	5-7 Yrs. Intervals	40 Hrs.
Calibrated Instrument	1 ppm	Yes	>500 ppm	1	n/r	n/r	@ 1.5 yrs.
Genelco, Inc.	25 ppm	No	8,000 ppm	1	7 min./?	5-10 Yrs.	5 Yrs.
MSA	10 ppm	Yes	n/a	4	Continuous	>10 Yrs.	>5 Yrs.
Universal Sensors & Devices, Inc.	200 ppm	No	7,500 ppm	8-32	Continuous	>5 Yrs.	>8 Yrs.
U. S. Industrial Products Co.	2 ppm	No	100% Lel	16	Continuous	>10 Yrs.	>3 Yrs.
Product Permeable							
Teledyne Geotech	<20ppm	n/r	n/r	1	Adjustable	Not known	5 Yrs.

Table C-3
Vendor Responses for Detection
Capability of Leak Monitoring Techniques (Continued)

Type of Detector/ Company	Response Time	Lag Time	Rise Time	Fall Time	Drift	Noise	Precision	Test Procedures	Limitations
Continuous Liquid-Phase									
Interface									
Comar, Inc.	@ 30 min.	n/a	n/a	n/a	None	None	100%	Yes	None
Product Soluble Devices									
EMTEK, Inc.	Instant	<1 min.	n/a	n/a	n/a	n/a	n/a	n/a	>32 F
In-Situ, Inc.	0.5-23 min. (liq.)	n/a	n/a	n/a	None	None	n/r	Ind. Lab	Temp. Tests
K&E Assoc.	5 sec.	NIL	<.5 sec.	<6 min.	None	None	1.1%	Cycle Test.	--
Technology 2000, Inc.	Variable	n/a	n/a	n/a	n/a	n/a	n/a	Given	Temp.
Electrical Resistivity									
Total Contain.	Given	Given	Given	Given	n/a	n/a	n/a	Given	Given
Thermal Conductivity Devices									
Leak-X	Immediate	5 sec.	n/a	n/a	n/a	n/a	n/a	NBS,UL,etc.	Liq. Only
Pollulert Systems (Mallory)	Instant	Instant	Instant	Instant	n/a	n/a	Given	Given	Temp.
Universal Sensors & Devices, Inc.		Instant	<1 MIN.	<3 MIN.	+/- 10%	+/- 2%	+/1 10%	Given	Temp. & Humidity
Intermittent Gas-Phase									
Portable GC's									
AID, Inc.	Variable	n/r	n/r	n/r	Minimal	Minimal	Var.	Std. Gas	Temp.
HNU	<3 sec	Negl.	Negl.	Negl.	<1 %	<1 %	+/- 10%	Known Samples	n/r
Photovac, Inc.	1-10 min.	1 min.	1 min.	1 min.	Compen-sated	1:4	3-5%	Std. Gas	Temp.
XON Tech	n/a	n/a	n/a	n/a	Minimal	Minimal	Good	Std. Gas	--
Infrared									
Horiba Engineering	30 sec.	30 sec.	30 sec.	30 sec.	2%/Day	1% of Full Scale	1% of Full Scale	Std. Gas	Temp.
PID's									
AID, Inc.	3 sec.	Var.	Var.	Var.	Not Known	Not Known	Var.	Std. Gas	Temp.
Astro Resources Int.	Instant	n/r	n/r	n/r	n/a	n/a	0.1 ppm	Propylene (gas)	Temp.
HNU	<3 sec	Negl.	Negl.	Negl.	<1 %	<1 %	+/- 10%	Known Samples	n/r
Photovac, Inc.	3 sec.	5 sec.	3 sec.	7 sec.	1 ppm/hr.	0.1 ppm	1%	Std. Gas	Temp. or Humidity

Table C-3
Vendor Responses for Detection Capability of Leak Monitoring Techniques (Continued)

Type of Detector/ Company	Response Time	Lag Time	Rise Time	Fall Time	Drift	Noise	Precision	Test Procedures	Limitations
Continuous Gas-Phase									
Catalytic Sensor Devices									
Bacharach Instrument Co.	30 sec.	n/r	n/r	n/r	+/- 250ppm for 10 min.	0-50 ppm	+/- 5%	Factory Testing	25 min. warm-up
Industrial Scientific Devices	12 sec.	n/r	n/r	n/r	n/r	n/r	1%	n/r	Temp.
Intek Corp.	10 sec.	2-3 sec.	7 sec.	20 sec.	2%	1% LFL LFL/mo.	+/- 5%	Standard	None
Rexnord Gas Detection Products	<20 sec.	n/a	n/a	<30 sec.	Negl.	n/a	+/- 3%	Given	--
Diffusion Sensors									
Adsistor Technology	1 sec.	msec.	msec.	seconds	No	No	Yes	Various	High Temps
Emco Wheaton	5 sec.	5 sec.	5 sec.	15 sec.	n/a	Compen-sated	n/a	Std. Gas	Temp.
EMMCO Enterprises	--	--	Instant	Var.	None	Compen-sated	+/- 10mV	Yes	n/a
Spearhead Tech., Inc.	Given	Given	Given	Given	None	None	Unspeci-fied	Given	Given
Metal Oxide Semiconductors									
Armstrong Monitoring	Immed.	n/a	n/a	30 sec.	+/- 8%	NIL	+/- 8%	Confiden-tial	NIL
Azonic Tech. Corp.	20 sec.	n/r	n/r	n/r	1 uV/C	120dB	1%	Factory Test	n/r
Calibrated Instrument, Inc.	<1 sec.	<1 sec.	<1 sec.	<1 sec.	Not Known	Not Known	Not Known	Lab Tests	Temp.
Genelco, Inc.	Immed.	Immed.	20 sec.	< 15 min	n/r	n/r	n/r	Gas Stds.	n/r
MSA	<10 sec.	<1 sec.	<10 sec.	<10 sec.	n/a	n/a	n/a	n/a	None
Universal Sensors and Devices, Inc.	--	Instant	<1 MIN.	<3 MIN.	+/- 10%	+/- 2%	+/1 10%	Given	Temp. & Humidity
U.S. Industrial Products Co.	30 sec.	3-10 sec.	5 sec.	45-60 sec.	<5%/Yr.	No	2%	n/a	n/a
Product Permeable Devices									
Teledyne Geotech	n/r	n/r	n/r	n/r	n/r	n/r	n/r	n/r	n/r

Table C-4
Vendor Responses for Experience of Leak Monitoring Techniques

Type of Detector/ Company	Product On Market	Years On Market	No. in Service	Has Leak Been Found?	Maint. Problems	Cause of False Negatives	Cause of False Positives
Continuous Liquid-Phase							
Interface Probe							
Comar, Inc.	Yes	1/2	12	No	None	Break in Cable	n/a
Product Soluble Devices							
EMTEK, Inc.	Yes	1	3	Yes	Ice	n/a	n/a
In-Situ, Inc.	Yes	1/4	0	No	None	n/a	n/a
K&E Assoc.	Yes	2	200	Yes	Ice, Elec.	n/a	Back-ground
Technology, 2000, Inc.	Yes	1/4	0	No	Severe Deterioration	None	Mech. Failure
Electrical Resistivity							
Total Containment	Yes	15	400-500	Yes	None	None	None
Thermal Conductivity							
Leak-X	Yes	10	1000's	Yes-Many	Improper Installation	Elec. Short	n/a
Pollulert Systems (Mallory)	Yes	Not Given	1000's	Yes	Cleaning	No Response	No Response
Universal Devices, Inc.	Yes	2	1,300	Yes	None	Not Known	Not Known
Intermittent Gas-Phase							
Portable GC's							
AID, Inc.	Yes	1	10	Yes	Columns	None	None
HNU	Yes	8-10	@ 3,500	Yes	Water	Application Dependent	Application Dependent
Photovac, Inc.	Yes	10	100's	Yes	Columns	Not likely	Interferences
XON Tech	Yes	6	@ 50	Not known	Not known	Not known	Not known
Infrared							
Horiba Engineering	Yes	10	100's	Yes	n/a	n/a	Interferences
PID's							
AID, Inc.	Yes	7	n/r	Yes	Water, Dirt	Moisture	Not known
Astro Resources Int.	No	n/r	Unavailable	Yes	Calibration	n/a	Interferences From Gases
HNU	Yes	8-10	@ 3,500	Yes	Water	Application Dependent	Application Dependent

Table C-4
Vendor Responses for Experience of Leak Monitoring Techniques (continued)

Type of Detector/ Company	Product On Market	Years On Market	No. in Service	Has Leak Been Found?	Maint. Problems	Cause of False Negatives	Cause of False Positives
PID's (cont.)							
Photovac, Inc.	No	2 (TIP)	100's	Yes	Dust Filter	None	Interferences
Continuous Gas-Phase							
Catalytic Sensors Devices							
Bacharach Instrument Co.	Yes	1	100	Yes	None	?	Below 100ppm Interferences
Industrial Scientific Devices	Yes	5	n/r	Yes	None	None	None
Intek Corp.	Compo-nent Only	7	>20,000	Yes	Several (given)	No specific	No specific
Rexnord Gas Detection Pds.	Yes	15	>50,000	Yes	Several (given)	Zero Drift VAC	Temperature
Diffusion Sensors							
Adsistor Technology	Yes	10-20	75,000	2 In Ground	n/a	n/a	n/a
Emco Wheaton	Yes	1.5	200	Yes	n/a	None	None
EMMCO Enterprises	Yes	12	0 (50,000)	Yes	0-60 C	None	Electrical Malfunction
Spearhead Tech., Inc.	Yes	Given	35	Yes	Given	None	Given
Metal Oxide Semiconductors							
Armstrong Monitoring	Yes	5	n/a	Yes	None To Date	Old Sensor	n/a
Azonic Tech. Corp.	Yes	0.5-1	10-15	Yes	Several Listed	Several (<1%)	<1%
Calibrated Instrument, Inc.	Yes	12	Not Known	n/r	n/r	n/r	n/r
Genelco, Inc.	Yes	1.5	30	Yes	None Observed	None To Date	None To Date
MSA	Yes	Just Started	Test Units Only	Yes	None	None Known	None To Date
Universal Sensors & Devices, Inc.	Yes	2	1,300	Yes	Given	Not Known	Not Known
U.S. Industrial Products Co.	Yes	1	n/a	n/a	n/a	Temperature	No
Product Permeable Devices							
Teledyne Geotech	Yes	4	1 (tank) 4 (pipeline)	Yes	Given	Sensor Break	n/a

Table C-5
Vendor Responses for Cost of Leak Monitoring Techniques

Type of Detector/ Company	Capital Costs		Installation Costs - $ (4 Tanks)			Maintenance Cost $
	Control Box	Sensor	New Facility	Old Facility	Old Well	
Continuous Liquid-Phase						
Interface Probe						
Comar, Inc.	1,200	200	1,200	1,200	200	NIL
Product Soluble Devices						
EMTEK, Inc.	1,195	260-DW Tank	>2,200 600-Well	>3,600	>3,600	None
In-Situ, Inc.	395	195-245	1,500-2,000	3,000 - 7,000	1,500 - 2,000	None
K&E Associates	1,175	475	>2,500	>4,500	500	<50/Yr.
Technology 2000, Inc.	1,400	900	11,000	7,000 - 11,000	7,000	100
Electrical Resistivity						
Total Containment	1,495	85-185	2,820	5,520	3,320	n/r
Thermal Conductivity Devices						
Leak-X	1,400	625-725	2,500	5,500	4,200	600/Yr.
Pollulert Systs. (Mallory)	n/r	n/r	Minimal	Var.	Same As Equipment	2 Man Hours
Universal Sensors & Devices, Inc.	1,000-1,600	200-800	1,400	4,900	1,600	300/Yr.
Intermittent Gas-Phase						
Portable GC's						
AID, Inc.	5,850	398	Var.	Var.	None	Minimal
HNU	n/r	n/r	@20,000	@ 20,000	@ 20,000	<5% / Yr.
Photovac, Inc.	8,000 - 14,000	n/a	Var.	Var.	Var.	600/Yr.
XON Tech	n/a	5,000-12,000	n/a	n/a	n/a	Not Known
Infrared						
Horiba Engineering	1,750 - 9,000	n/a	1,750-30,000	1,750 - 30,000	n/r	Var.
PID's						
AID, Inc.	3,880	398	Not Known	Not Known	None	Minimal
Astro Resources Int.	4,125	1,675	n/r	n/r	n/r	n/r
HNU	n/r	n/r	@ 20,000	@ 20,000	@ 20,000	<5%/Yr.
Photovac, Inc.	6,300	200	n/r	7,500	7,000	600/Yr.

Table C-5
Vendor Responses for Cost of Leak Monitoring Techniques (Continued)

Type of Detector/ Company	Capital Costs		Installation Costs - $ (4 Tanks)			Maintenance Cost $
	Control Box	Sensor	New Facility	Old Facility	Old Well	
Continuous Gas-Phase						
Catalytic Sensor Devices						
Bacharach Instrument Co.	895	65	n/a	n/a	n/a	n/r
Industrial Scientific Devices	n/a	<100	n/a	n/a	n/a	n/a
Intek Corp.	950-1,300	@180	n/r	n/r	n/r	n/r
Rexnord Gas Detection Products	700-2,400	125	Same As Equip. Cost	Same As Equip. Cost	Same As Equip. Cost	Low
Diffusion Sensors						
Adsistor Technology	n/a	n/a	n/a	n/a	n/a	n/a
Emco Wheaton	1,400	200	Given	Given	Given	Minimal
EMMCO Enterprises	1,950 - 4,200	250	>3,700	>3,700	>3,500	0-150/Mo.
Spearhead Tech., Inc.	2,450 - 3,540	200-300	1,000-1,200	3,000	1,200-1,500	1,400/Yr.
Metal Oxide Semiconductors						
Armstrong Monitoring	420	28	--	--	--	NIL
Azonic Technology Corp.	1,500 - 4,000	1,000-1,500	3,000-7,500	3,000-7,500	3,000-4,700	300/Yr.
Calibrated Instrument, Inc.	<1,000	n/r	n/r	n/r	n/r	n/r
Genelco, Inc.	1,500 - 4,000	Included	Var.	Var.	Var.	Var.
MSA	985	94	Not Estab.	Not Estab.	n/r	Near Zero
Universal Sensors & Devices, Inc.	1,000 - 1,600	200-800	1,400	4,900	1,600	300/Yr.
U.S. Industrial Products Co.	>1,300	145	n/a	n/a	3,200-3,600	n/a
Product Permeable Devices						
Teledyne Geotech	5,000	6/ft.	n/r	n/r	n/r	Negl.

Table C-6
Vendor Responses For Recommended Procedures For Leak Monitoring Devices

Type of Detector/ Company	Are Wells Required?	Can System be Retrofitted?	Recommend Site Study	Utility Service	Location To Tank	Distance From Tank
Continuous Liquid-Phase						
Interface Probe						
Comar, Inc.	Yes	Yes	Unnecessary	None	Downgradient	Perimeter
Product Soluble Devices						
EMTEK, Inc.	Yes or DW Tank	Yes	Yes	115/230V 60Hz	4 Corners	VAR.
In-Situ, Inc.	No	Yes	Yes	None	Downgradient	VAR.
K&E Assoc.	Yes	Yes	No	120 VAC	--	Within 5 Ft.
Technology 2000, Inc.	No	Yes	Yes	110VAC	Downgradient	Close
Electrical Resistivity						
Total Containment	Yes	Yes	Yes	110-120 VAC, 50/60 Hz	In Excavation	2 Ft.
ThermalConductivity Devices						
Leak-X	Yes	Yes	Yes	120 VAC	2 Ft. Below	2 Ft.
Pollulert Systems (Mallory)	Yes	Yes	As Required	110 V	2 Ft. Below	Close
Universal Sensors & Devices, Inc.	Yes	Yes	Yes	115VAC	Within 15 Ft.	<15 Ft.
Intermittent Gas-Phase						
Portable GC's						
AID, Inc.	No	Yes	Yes	10VAC, 12VDC	n/a	100 Ft.
HNU	No	Yes	Yes	110V, 60Hz	Up To User	n/a
Photovac, Inc.	No	Yes	Yes	None	Downgradient	n/a
XON Tech	Not Known	Not Known	Not Known	110V	Not Known	VAR.
Infrared						
Horiba Engineering	Yes	Yes	No	115V,60Hz	n/a	n/a
PID's						
AID, Inc.	Yes	Yes	Yes	None	n/a	n/a
Astro Resources Int.	n/a	Yes		AC Power	As close as Possible	20-30 Ft.
HNU	No	Yes	Yes	110V, 60Hz	Up to User	n/a
Photovac, Inc.	Yes	Yes	No	110 VAC	Above Water Table	50 Ft.

Table C-6
Vendor Responses For Recommended
Procedures For Leak Monitoring Devices (Continued)

Type of Detector/ Company	Are Wells Required?	Can System be Retrofitted?	Recommend Site Study	Utility Service	Location To Tank	Distance From Tank
Continuous Gas-Phase						
Catalytic Sensor Devices						
Bacharach Instrument Co.	Yes (Barhole)	Yes	No	None	n/r	n/r
Industrial Scientific Devices	n/a	n/a	n/a	n/a	n/a	n/a
Intek Corp.	← See Write-Up →					
Rexnord Gas Detection Products	Sometimes	Yes	Yes	11 VAC or 20-28 DC	VAR.	VAR.
Diffusion Sensors						
Adsistor Technology	n/a	n/a	n/a	n/a	n/a	n/a
Emco Wheaton	Sometimes	Yes	Yes	115 VAC <15 AMP	Above Water Table	Variable
EMMCO Enterprises	Yes	Yes	Yes	VAR.	Under	Close Proximity
Spearhead Tech., Inc.	No	Yes	Yes	Given	Given	Given
Metal Oxide Semiconductors						
Armstrong Monitoring	No	Yes	Yes	110-120VAC, 60Hz	In Excavation	1 Ft. Below
Azonic Technology Corp.	Yes	Yes	Yes	None	Backfill	None Specified
Calibrated Instrument, Inc.	n/r	n/r	n/r	n/r	n/r	n/r
Genelco, Inc.	No	Yes	Yes	115 VAC	See Manual	1 Ft.
MSA	Yes	Yes	No	Elec Power	See Manual	See Manual
Universal Sensors & Devices, Inc.	Yes	Yes	Yes	115VAC	Within 15 Ft.	<15 Ft.
U.S. Industrial Products Co.	No	No	No	--	Given	1 Ft.
Product Permeable Devices						
Teledyne Geotech	No	Yes	Yes	n/r	As Close as Possible	n/r

Table C-6
Vendor Responses For Recommended
Procedures For Leak Monitoring Devices (Continued)

Type of Detector/ Company	No. of Sensors Per Tank	Calibration Procedures	Adjustable Instrument Settings	Use In Wet Soil	Operating Environment	Temperature Range	Voltage Range
Continuous Liquid-Phase							
Interface Probe							
Comar, Inc.	1-4	None	None	Yes	Any	-50° - 140° F	n/a
Product Soluble							
EMTEK, Inc.	4	Pump Test	None	Yes	Syst. is Safe	None Given	None Given
In-Situ, Inc.	Var.	None	None	Yes	Any	No Limits	n/a
K&E Assoc.	1-4	Given	Yes	Yes	n/a	30° -120° F	85-135 V
Technology 2000, Inc.	4	Given	None	Yes	Given	-4° -122° F	95-130 Vac
Electrical Resistivity							
Total Containment	4	None	None	Yes	Any	32° -250° F 120° -150° (cable)	110-120 Vac
Thermal Conductivity							
Leak-X	Every 15 Ft.	None	None	Yes	Any	-40° - 50° C	100-140 Vac
Pollulert Systs. (Mallory)	4	None	None	Yes	Given	-40° - 50° C	100-140 Vac
Universal Sensors & Devices, Inc.	Every 15 Ft.	None	Trimpots	Yes	Non-explosive	32° -125° F	105-125 Vac
Intermittent Gas-Phase							
Portable GC's							
AID, Inc.	1	Gas Std.	None	Yes	Non-explosive	0° - 40° F	n/r
HNU	1 or more	n/a	Zero/Span	Yes	Given	n/r	n/r
Photovac, Inc.	1	Cal. Gas	Several	Yes	Non-explosive	40° -120° F	115 AC or 12V DC
XON Tech	Not known	Cal. Gas	Not known	Yes	Room Temp.	RT-200° C	110V
Infrared							
Horiba Engineering	n/a	Std. Gas	Zero/Span	Yes	Given	Given	110-130V
PID's							
AID, Inc.	n/a	Cal. Gas	None	Yes	Non-explosive	0° - 45° C	115 Vac, 12 V DC
Astro Resources Int.	Var.	N2+C3H8 Gas Stds	Zero/Span	Yes	Clean, Temp Controlled	-10° - +50° C	110Vac, 60Hz
HNU	1 or more	n/a	Zero/Span	Yes	Given	n/r	n/r
Photovac, Inc.	1-6	Cal. Gas	Several	Yes	Given	30 °-120° F	110-120 V

Table C-6
Vendor Responses For Recommended Procedures For Leak Monitoring Devices (Continued)

Type of Detector/ Company	No. of Sensors Per Tank	Calibration Procedures	Adjustable Instrument Settings	Use In Wet Soil	Operating Environment	Temperature Range	Voltage Range
Continuous Gas-Phase							
Catalytic Sensor Devices							
Bacharach Instrument Co.	n/r	Cal. Kit	Several	Yes	Intrinsically Safe	-4° - 122° F	n/a
Industrial Scientific Devices	n/a	n/a	n/a	n/a	Any	-10° - 45° C	n/a
Intek Corp.	← See Write-up →				OK for Hazardous	-20° - 60° C	n/r
Rexnord Gas Detection Prods.	Var.	See Manual	None	Yes	Controller in Non-hazard.	-40° - 85° C	105-130 Vac 20-28 DC
Diffusion Sensors							
Adsistor Technology	n/a	n/a	n/a	n/a	Air	-100° - 160° F	mV-12V
Emco Wheaton	1 or more	None	Trip point	Yes	Controller in Non-hazard.	-40° - 70° C	n/r
EMMCO Enterprises	1 or more	"A" Constant	"A" Constant	Yes	NFPA Class1	Not Specified	105-125 Vac
Spearhead Tech., Inc.	Given	Given	Given	Yes	Air	-100° - 160° F	110 V
Metal Oxide Semiconductors							
Armstrong Monitoring	1-2	n/a	None	Yes	Non-explosive	n/r	n/r
Azonic Tech. Corp.	1-2	See Manual	See Manual	Not in Saturated	Non-explosive	0° -125° C	n/r
Calibrated Instrument, Inc.	n/r	n/r	n/r	n/r	n/r	n/r	n/r
Genelco, Inc.	2	Self-Calibrat	Several	Yes	Indoors	Not Specified	105-125 Vac
MSA	4	See Manual	Several	Yes	Intrinsically Safe	-5° - 140° F	110-125 Vac
Universal Sensors & Devices, Inc.	Every 15 Ft.	None	Trimpots	Yes	Non-explosive	32° -125° F	105-125 Vac
U.S. Indust. Products Co.	1-2	Zero/Span	None	Yes	Given	-10° - 150° C	3 VDC
Product Permeable Devices							
Teledyne Geotech	2	None	Gain/Zero	Yes	Any	n/r	n/r

Table C-6
Vendor Responses For Recommended
Procedures For Leak Monitoring Devices (Continued)

Type of Detector/ Company	Maintenance Requirements	Maintenance Schedule	Calibration Procedures	Calibration Schedule	Flow Rate	Certification	Differentiates Surface Vs. Underground
Continuous Liquid-Phase							
Interface							
Comar, Inc.	None	2 Yrs.	None	n/a	n/a	No	No
Product Soluble							
EMTEK, Inc.	n/a	n/a	n/a	n/a	n/a	n/a	n/a
In-Situ, Inc.	Inspect	Weekly For 1 min.	None	None	n/a	Yes	No
K&E Associates	System Test	As Required	n/a	n/a	n/a	Yes	No
Technology 2000, Inc.	Inspect	Annual	None	None	n/a	Yes	No
Electrical Resistivity							
Total Containment	None	None	None	None	n/a	Yes	No
Thermal Conductivity							
Leak-X	Inspect	60 days	None	None	n/a	Yes	No
Pollulert Systs. (Mallory)	Clean Probes	As Required	None	None	n/a	Yes	No
Universal Sensors & Devices, Inc.	Not Given	4/Yr.	None	None	n/a	Yes	n/a
Intermittent Gas-Phase							
Portable GC's							
AID, Inc.	Given	Before Use	Gas Std.	Before Use	0.010 L/min.	Use Stds.	Yes
HNU	n/r	n/r	n/r	n/r	n/r	Use Stds.	By Placement
Photovac, Inc.	Given	6 Mo.	Automatic	1/Hr.	n/a	Use Stds.	No
XON Tech	Minimal	Minimal	Std. Gas	Var.	Var.	Calibr.	No
Infrared							
Horiba Engineering	Day/Month	Monthly	Day/Month	Day/Month	0.5-1.5 L/min.	Yes	No
PID's							
AID, Inc.	Clean Lamp	Given	Zero/Span	Daily	0.3-0.6 L/min.	Use Stds.	Yes
Astro Resources Int.	Calibration	Daily	Daily	Daily	0.05-0.5 L/min.	No	No
HNU	n/r	n/r	n/r	n/r	n/r	Use Stds.	By Placement
Photovac, Inc.	Given	6 Mo.	Automatic	1/Day	n/a	Given	No

Table C-6
Vendor Responses For Recommended Procedures For Leak Monitoring Devices (Continued)

Type of Detector/ Company	Maintenance Requirements	Maintenance Schedule	Calibration Procedures	Calibration Schedule	Flow Rate	Certification	Differentiates Surface Vs. Underground
Continuous Gas-Phase							
Catalytic Sensor Devices							
Bacharach Instrument Co.	Std. Gas	n/r	n/r	Check Before Use	>1.2 SCFH	Cert. Gas	No
Industrial Scientific Devices	Calibration	None	Std. Gas	Check Before Use	n/a	n/r	n/a
Intek Corp.	Calibration	Var.	Var.	n/r	1 L/min. (+/- 50%)	Zero/Span	n/r
Rexnord Gas Detection Prods.	Calibration	4/Yr.	See Manual	4/Yr.	2 Ft3/Hr.	Yes	No
Diffusion Sensors							
Adsistor Technology	None	None	Yes	Once	n/a	Yes	By Location
Emco Wheaton	Annual Test	Annual	None	n/a	n/a	Yes	No
EMMCO Enterprises	Self testing	Self Testing	Resistance Test	Not Established	n/a	Yes	No
Spearhead Tech., Inc.	Given	4/Yr.	Given	Given	n/a	Given	Given
Metal Oxide Semiconductors							
Armstrong Monitoring	None	Not Needed	Gas Std.	When Sens. Replaced	n/a	Cal-kits	No
Azonic Tech. Corp.	Clean	1-2/Yr.	See Manual	During Maintenance	2 L/min.	Yes	Yes
Calibrated Instrument, Inc.	n/r	n/r	n/r	n/r	n/r	n/r	n/r
Genelco, Inc.	6 Mo.	6 Mo.	Self-Calibration	None	2 L/min.	Yes	Yes
MSA	None	n/a	See Manual	4/Yr.	n/a	n/a	No
Universal Sensors & Devices, Inc.	Not Given	4/Yr.	None	None	n/a	Yes	n/a
U.S. Industrial Products Co.	Minimal	6 Mo.	6 Mo.	At Install.	n/a	n/a	n/a
Product Permeable Devices							
Teledyne Geotech	n/r	n/r	n/r	n/r	0.7-1.1 L/min.	n/r	n/r

GLOSSARY OF TERMS

The purpose of this section is to provide definitions related to proper interpretations of this report.

Accuracy is the degree of agreement between the measured value and the "true" value; it includes components of bias (systematic error) and precision (random error).

Anode is the electrode at which oxidation (electron releasing) reactions occur. The anode is electrically connected to a **cathode** (see definition) where the released electrons are consumed. In the process of corrosion, the anode is the place where metal oxidizes to positive ions which dissolve in the electrolyte. The anode may be a separate piece of metal, as when steel is connected to brass (see **galvanic corrosion**), or it may be an area on a freely corroding surface which develops a slight positive potential relative to the rest of the metal because of metallurgical or environmental variations. Metal is eaten away at this location. Anodes in impressed current cathodic protection systems are not necessarily metallic, but must be electrical conductors.

Annular space is the space between the inner and outer walls of a double-wall tank or pipe.

Aquifer refers to subsurface strata containing sufficient groundwater so that the water can be pumped out.

Area-wide surveillance techniques refer to a number of methods used to identify the location of a leak or to delineate an area of contamination. They involve systematically making a number of measurements over a large area.

Automatic level sensor refers to an instrument used for inventory control to provide unattended, product volume measurements.

Background contamination is any residual concentration of the analyte of interest that may be present at a site.

Calibration schedule is the frequency of inspection and adjustments required to ensure reliable detector performance.

Cathode is an electrode where reduction (electron consuming) reactions occur. No corrosion (metal loss) occurs at cathodes.

Cathodic protection is a technique for reducing the rate of corrosion of a metal by artificially making it the cathode of an electrochemical corrosion cell by application of direct current. There are two fundamental kinds of cathodic protection systems: sacrificial anode systems and impressed current systems. Sacrificial anode systems consist of anodes of active metals like zinc, magnesium, or aluminum connected to the structure to be protected. The active metal corrodes away and releases electrons into the structure to be protected; in this way, the structure becomes a cathode. The anodes which are consumed over time are "sacrificial" and must be replaced periodically. Impressed current systems use DC current from an external power supply. The anodes are inert, do not corrode away, and do not require periodic replacement.

Chemical indicators are leak detection methods that use test materials that produce a color change when exposed to a particular product.

Coatings are corrosion and chemical resistant materials that are sprayed, brushed, or rolled onto the metal surface of a storage tank. Coatings serve one of two main purposes: (1) they protect the metal from attack by a corrosive liquid or environment, or (2) they protect the product from contamination by corrosion products.

Continuous monitoring systems are leak detection systems that provide automatic, unattended leak monitoring over extended periods of time. The sampling frequency typically involves multiple measurements per hour.

Control box life is the anticipated usable time period for the control box of a leak detection system.

Corrosion is the degradation of a material by its environment. In the context of this report, most

corrosion is electrochemical. (See **corrosion cell.**)

Corrosion cell, also called an electrochemical cell, consists of (1) a metallic **anode** where oxidation of metal to positive ions occurs; these positive ions detach from the metal entering the **electrolyte**, and this results in metal loss; (2) a **cathode** where reduction reactions consume the electrons generated by the oxidation reaction at the anode; (3) an electrical conductor between the anode and cathode; and (4) an electrolyte wetting both anode and cathode. All of these components must be present for corrosion of buried structures to occur.

Costs refer to the price of purchasing, installing, and maintaining a leak detection system.

Data capture is the percentage of valid measurements retained.

Detection limit is the minimum amount or concentration of a substance (pollutant) that can be identified, measured, and reported with 99 percent confidence that the analyte concentration is greater than zero. It is determined from analysis of a sample in a given matrix containing the analyte.

Dielectric constant is a value that serves as an index of the ability of a substance to resist the transmission of an electrostatic force from one charged body to another. The lower the value, the greater the resistance.

Double-wall pipe refers to two pipes in one (i.e., a complete pipe enclosed within a secondary pipe). These are typically provided with a means for monitoring the space between the inner and outer pipes for a leak in either pipe.

Double-wall tank refers to two tanks in one (i.e., a complete tank enclosed within a secondary tank). These are typically provided with a means for monitoring the space between the outer and inner tanks (called the annulus) for a leak in either tank.

Drift is the change in baseline readings with time because of internal electronic variations.

Electrolyte is any medium containing mobile ions which can conduct a current. Soil moisture and groundwaters are the electrolytes of concern with buried underground tanks.

Electrolytic corrosion (see also **stray current corrosion**) is electrochemical corrosion as a result of impressed electrical currents from sources other than the intended circuit. These "stray currents" impress a negative potential, relative to the electrolyte, on some areas of the affected structure. These areas are cathodically protected. Other areas develop impressed positive (anodic) potentials, become anodes, and suffer accelerated corrosion. Sources of stray currents may be cathodic protection systems of surrounding facilities, factories or shops using DC current equipment (i.e., arch welders), electrified railways or transit systems, and buried utility power cables. Improper grounding of electric equipment connected to the buried structure may also cause stray current corrosion.

Electrical insulation is a material which does not conduct electrons. Placing an electric insulator between two dissimilar metals will prevent **galvanic corrosion** .

Electrical resistivity sensors are leak detection cables that deteriorate in the presence of petroleum product. This causes a change in an electrical signal, thereby activating an alarm.

EMSL (Environmental Monitoring Systems Laboratory) is the part of the U.S. Environmental Protection Agency responsible for developing the technical background necessary for developing regulations for leak monitoring.

Fall time is the time required for the detector to return to a near-baseline reading after the pollutant is no longer present.

FRP (fiber-reinforced plastic) is a composite material made up of a resin (typically epoxy or polyester) reinforced with fibers. Spun glass in strands or woven mats is the usual reinforcing material. FRP does not corrode by electrochemical process and is unaffected by groundwater. FRP is widely used for corrosion-resistant pipe and tanks. It can be severely degraded by some commercial products which may be stored in underground storage tanks.

Galvanic corrosion occurs when dissimilar metals, such as steel and brass, are electrically connected together and are placed in the soil electrolyte. One of the two metals, steel in the above example, becomes an anode and corrodes at an accelerated rate, especially when it is adjacent to the other metal. Galvanic corrosion can be prevented by using special **isolation fittings** to join the two materials.

Geotextile is a textile fabric, such as a filter fabric used in civil engineering applications. It is used in

conjunction with synthetic liners to provide structural support.

Grab sampling is the collection of discrete soil, water, or gas samples from a given area for analysis.

Groundwater is the water beneath the ground surface that fills the cracks and pore spaces of rocks or soils.

Groundwater masking occurs when a leak is present but is not detected by integrity testing because the hydrostatic pressure outside the tank equals the head pressure inside the tank, and no net fluid level changes occur.

Henry's Law states that the amount of a gas that dissolves in a given quantity of a liquid at constant temperature is directly proportional to the partial pressure of the gas above the solution.

Henry's Law constant is the compound-specific proportionality constant in Henry's Law equations.

Inclined tank refers to an underground storage tank that is not level. Therefore, the manufacturer's product level versus tank volume charts are not accurate.

Instrument response time is the time required for the instrument to register 95 percent of the final reading (true value) once the detector comes in contact with the substance of interest.

Integrity testing refers to in-tank procedures used to determine if an underground storage tank system is leaking. These tests typically involve shutting down the facility for up to a day and temporarily installing specialized test equipment. They provide a point-in-time determination of whether the system is leaking.

Interface probes are leak detectors that utilize both fiber optics to identify liquid levels in a monitoring well and conductivity probes to differentiate between oil and water.

Interferences are any chemical substances or physical phenomena that hinder the performance of the leak detection system.

Interior liner is a corrosion and chemical resistant material which is sprayed, brushed, or applied onto the interior of a tank. This protects the metal from attack from corrosive liquids or environments and protects the product from contamination by corrosion products.

Intermittent monitoring systems refers to the manual, periodic sampling of observation wells for leak detection.

Interstitial monitor refers to a leak detector used in the annular space of a double-walled tank or pipe.

Intrinsic safety is the ability of monitoring a device to operate safely in recommended operating environments. Also, it is the acceptability of any safety-related information printed on the device and in the operating manual.

Inventory control refers to measurements and record keeping designed to track all transfers of product into and out of a storage tank. An imbalance or discrepancy between measured levels and the delivery and use receipts may indicate that a leak is present.

Isolation fitting is a device for connecting pipes of dissimilar metals together without an electrical connection, and thus, for preventing galvanic corrosion. For smaller pipe sizes, the device consists of a specially designed "isolation union" with an insulator insert. Special gaskets are available for flanged connections. Great care is required to be sure that there is no alternate conductor path around the isolation fitting, or no benefit will occur from its use.

Lag time and rise time when summed are the total length of time for an alarm to be activated once the sensor comes in contact with the analyte at a level above the detection limit. For electronic devices, lag time is the time for a discernible signal to be generated once the monitor comes in contact with the specie of interest. Rise time is the time from when a discernible signal is generated until an alarm level (or 95 percent of the final reading) is reached.

Leak detection refers to any approach used to determine whether an underground tank is tight (not leaking); it includes integrity testing, inventory control, and leak monitoring.

Leak monitoring refers to the examination of the area outside the tank for evidence of free product.

Liner refers to synthetic or natural (e.g., clay) materials used to cover the bottom and sides of the excavation pit to serve as secondary or tertiary containment.

Lithology is the character of a rock formation.

LUST (Leaking Underground Storage Tanks) is an acronym frequently used as a catch-all term to describe topics related to underground storage tanks.

Maintenance schedule is the frequency of inspection and repair required to maintain reliable system performance.

Monitoring refers to all procedures used to systematically inspect and collect data on operational parameters.

Monitoring well is a well that extends from surface grade to several feet below the water table (or several feet below the tank bottom in arid areas) and that permits leak detection devices to sense the subsurface environment.

Noise refers to any background or signal interferences.

Operating environment is the range of environmental and operating conditions (e.g., temperature, pH, line voltage) that a leak monitoring device will experience during its usable life.

OUST (Office of Underground Storage Tanks) is the part of the U.S. Environmental Protection Agency established to oversee the regulatory effort for underground storage tanks.

Overfill protection refers to the use of liquid level alarms or automatic shut-off valves to prevent excess product from being delivered to a tank; as well as to impermeable barriers, sorbents, and special couplings designed to minimize and contain spilled product at transfer areas.

Permeability is the capacity of a porous medium to conduct or transmit fluids.

Pitting is a particularly damaging form of corrosion in which small areas of the metal surface corrode rapidly to form cavities or holes. The overall corrosion rate may be low while penetration of the tank wall occurs rapidly in a few isolated areas. Unprotected buried steel does pit rapidly under certain soil conditions.

Porosity is the ratio of the volume of interstices of a material to the volume of its mass.

Precision is the measure of the ability to make replicate measurements, i.e., an estimate of random error.

Product refers to any material stored in an underground tank. In this report, product is typically assumed to be petroleum in some form, such as gasoline, fuel oil, or diesel fuel, etc.

Product permeable devices are leak detectors that allow volatile petroleum product vapors, but not water vapor, to pass through a coated surface to a sensing element.

Product soluble devices are leak detectors that contain a polymer that dissolves in petroleum product but not in water. This dissolution can be used to trigger an alarm by any one of several designs.

Qualitative integrity test is an integrity test that determines if an underground storage tank system is leaking but that does not specify a leak rate.

Quantitative integrity test is an integrity test that determines whether or not an underground storage tank system is leaking and that provides a leak rate.

RCRA (Resource Conservation and Recovery Act) is the law in which Congress has required regulation of most underground storage tanks containing petroleum products.

Recommended operating environment is the vendor's estimated working range for its system with regard to temperature, humidity, etc. (see also **operating environment**).

Response time is the instrument response time plus the time for any leaked product to reach the sensor (see also **instrument response time**).

Sacrificial protection is the minimization or prevention of corrosion of a metal in an electrolyte by galvanically coupling it to a more anodic metal that literally is consumed; hence, sacrificial.

Sampling frequency is the number of sampling events per unit time.

Secondary containment refers to a system installed so that any volume of leaked material from the primary containment is prevented from reaching the soil or water outside the containment for the anticipated period of time necessary to detect and recover the leaked material.

Sensor life is the anticipated reliable time period for the sensing element of a leak monitoring system.

Service life is the expected useful life of the control box, sensors, and ancillary equipment.

Sheen is an iridescent appearance on the surface of water.

Signal/noise is the ratio of a discernible measured value to the normal signal output when no sample is present.

Specificity is the ability of a monitor to detect a specific chemical or class of chemicals.

Stray current corrosion is corrosion resulting from direct current flow-through paths other than the extended circuit. Service stations, for example, built near cathodic protection rectifiers, factories or shops using DC, or electrified (P.C.) railways or transit systems may experience stray current corrosion.

Synthetic liner is a plastic or rubber sheeting used to line an excavated area.

Tank-end deflection refers to the outward movement of the ends of a steel storage tank when product is added to the tank. The term may also be used to refer to the bowing out of the sides of a fiberglass tank after filling.

Thermal conductivity sensors are floating leak detection probes that measure heat loss at the air-liquid interface in a monitoring well. They distinguish between air, water, and product.

Threshold detection is the lower limit of detector sensitivity.

U-tube refers to a collection system for leaked product that can be used to underlie a storage tank in areas with deep groundwater. The U-tube permits liquid-phase leak detection methods to be employed.

Underground storage tank (UST) systems refer to tanks buried underground and to the related system composed of product lines, pumps, dispensers, and associated appurtenances for the storage and dispensing of light petroleum products. Any storage system with 10 percent or more of its volume below ground is considered an UST system.

Vapor pockets are small volumes of volatilized product that may accumulate against the upper surface of a tank and that may affect integrity test results.

Vapor pressure is the pressure characteristic at any given temperature of a vapor in equilibrium with its liquid or solid form.

Viscosity is the property of a fluid that enables it to develop and maintain an amount of shearing stress dependent on the velocity of flow and then to offer continued resistance to flow.

Water table refers to a layer beneath the ground where the rocks or soil are saturated; it separates the phreatic zone (below) from the vadose zone (above).