Keep Paper Copy

United States
Environmental Protection
Agency

Industrial Environmental Research
Laboratory
Research Triangle Park NC 27711

EPA-600/7-78-052b
July 1978

EPA

EPA Industrial Boiler FGD Survey: Second Quarter 1978

Interagency Energy/Environment R&D Program Report

RESEARCH REPORTING SERIES

Research reports of the Office of Research and Development, U.S. Environmental Protection Agency, have been grouped into nine series. These nine broad categories were established to facilitate further development and application of environmental technology. Elimination of traditional grouping was consciously planned to foster technology transfer and a maximum interface in related fields. The nine series are:

1. Environmental Health Effects Research
2. Environmental Protection Technology
3. Ecological Research
4. Environmental Monitoring
5. Socioeconomic Environmental Studies
6. Scientific and Technical Assessment Reports (STAR)
7. Interagency Energy-Environment Research and Development
8. "Special" Reports
9. Miscellaneous Reports

This report has been assigned to the INTERAGENCY ENERGY-ENVIRONMENT RESEARCH AND DEVELOPMENT series. Reports in this series result from the effort funded under the 17-agency Federal Energy/Environment Research and Development Program. These studies relate to EPA's mission to protect the public health and welfare from adverse effects of pollutants associated with energy systems. The goal of the Program is to assure the rapid development of domestic energy supplies in an environmentally-compatible manner by providing the necessary environmental data and control technology. Investigations include analyses of the transport of energy-related pollutants and their health and ecological effects; assessments of, and development of, control technologies for energy systems; and integrated assessments of a wide range of energy-related environmental issues.

EPA REVIEW NOTICE

This report has been reviewed by the participating Federal Agencies, and approved for publication. Approval does not signify that the contents necessarily reflect the views and policies of the Government, nor does mention of trade names or commercial products constitute endorsement or recommendation for use.

This document is available to the public through the National Technical Information Service, Springfield, Virginia 22161.

EPA-600/7-78-052b
July 1978

EPA Industrial Boiler FGD Survey: Second Quarter 1978

by

J. Tuttle, A. Patkar, N. Gregory, and M. Eckstein

PEDCo. Environmental, Inc.
11499 Chester Road
Cincinnati, Ohio 45246

Contract No. 68-02-2603
Task No. 36
Program Element No. EHE624

EPA Project Officer: R. Michael McAdams

Industrial Environmental Research Laboratory
Office of Energy, Minerals, and Industry
Research Triangle Park, NC 27711

Prepared for

U.S. ENVIRONMENTAL PROTECTION AGENCY
Office of Research and Development
Washington, DC 20460

NOTICE

This report, (prepared by PEDCo Environmental, Inc., Cincinnati, Ohio under EPA Contract No. 68-02-2603, Task No. 4) is provided as an information transfer document. Data in this report are supplied voluntarily by industry representatives; flue gas desulfurization (FGD) system designers, vendors, and suppliers; regulatory personnel; and others. Neither EPA nor the designated contractor warrants the accuracy or completeness of information contained in this report.

Initial distribution of the report is limited to organization and individuals indicating a specific interest in the field of FGD technology. Additional copies of this report and succeeding issues can be purchased from National Technical Information Service, Springfield, Virginia 22151.

TABLE OF CONTENTS

SECTION		PAGE
	NOTICE	ii
	EXECUTIVE SUMMARY	iv
1	INTRODUCTION	1
2	LIST OF INDUSTRIAL BOILERS WITH FGD SYSTEMS	3
	A SUMMARY OF ALL INSTALLATIONS BY NAME, LOCATION, START-UP DATE, AND CURRENT STATUS.	
3	SUMMARY OF FGD SYSTEMS ON INDUSTRIAL BOILERS	5
	A BRIEF SUMMARY OF THE SOURCE CHARACTERISTICS, THE CONTROL PROCESS AND CONTROL SYSTEM SUPPLIER, AND INFORMATION ON RECENT SYSTEM PERFORMANCE.	
4	SUMMARY BY VENDOR OF FGD SYSTEMS ON INDUSTRIAL BOILERS	13
	A LIST OF THE CONTROL SYSTEMS SUPPLIED BY EACH SYSTEM VENDOR OR MANUFACTURER.	
5	OPERATIONAL FGD SYSTEMS ON INDUSTRIAL BOILERS	16
6	UNDER CONSTRUCTION FGD SYSTEMS ON INDUSTRIAL BOILERS	19
7	PLANNED FGD SYSTEMS ON INDUSTRIAL BOILERS	20
8	SUMMARY OF DISPOSAL PRACTICES FOR FGD SYSTEMS ON INDUSTRIAL BOILERS	21
9	PERFORMANCE DESCRIPTION FOR OPERATIONAL FGD SYSTEMS ON INDUSTRIAL BOILERS	25
	AN IN DEPTH DATA PRESENTATION FOR THE OPERATIONAL CONTROL SYSTEMS. THIS SECTION PRESENTS BACKGROUND INFORMATION, OPERATING EXPERIENCE, ECONOMIC DATA , DESIGN DATA, DISPOSAL PRACTICES, AND ANY OTHER RELEVANT INFORMATION AVAILABLE CONCERNING THE FGD SYSTEMS AT THE VARIOUS INSTALLATIONS.	
10	DESIGN INFORMATION FOR UNDER CONSTRUCTION FGD SYSTEMS ON INDUSTRIAL BOILERS	95
	SAME AS SECTION 9, FOR CONTROL SYSTEMS UNDER CONSTRUCTION.	
11	DESIGN INFORMATION FOR PLANNED FGD SYSTEMS ON INDUSTRIAL BOILERS	101
	SAME AS SECTION 9, FOR PLANNED CONTROL SYSTEMS.	
12	DESCRIPTION OF INDUSTRIAL BOILER FGD SYSTEMS NOT OPERATING	106
	SAME AS SECTION 9, FOR CONTROL SYSTEMS WHERE FOR SOME REASON, THE SYSTEM IS NOT OPERATING.	
13	PROCESS DIAGRAMS FOR INDUSTRIAL BOILER FGD SYSTEMS	112

EXECUTIVE SUMMARY

THE FIRST FULL-SCALE UNITED STATES APPLICATION OF FLUE GAS DESULFURIZATION (FGD) TECHNOLOGY TO INDUSTRIAL BOILERS WAS AT THE GENERAL MOTORS PLANT IN ST. LOUIS, MISSOURI WHERE TWO FGD SYSTEMS WERE INSTALLED ON TWO COAL-FIRED BOILERS IN 1972. IN THIS 2ND QUARTER 1978 REPORT, 119 OPERATIONAL FGD SYSTEMS ARE DESCRIBED. THESE SYSTEMS ARE CONTROLLING SO2 EMISSIONS FROM 145 BOILERS, LOCATED AT 37 PLANT SITES ACROSS THE UNITED STATES. FGD SYSTEMS AT 11 PLANTS ARE KNOWN TO BE UNDER CONSTRUCTION OR IN SOME STAGE OF PLANNING. THE TOTAL COVERAGE OF THIS REPORT IS THEREFORE 48 PLANT INSTALLATIONS AS SUMMERIZED IN TABLE I.

TABLE I
NUMBER AND SCFM OF INDUSTRIAL BOILER FGD SYSTEMS

STATUS	NO. OF INSTALLATIONS	CAPACITY SCFM	NO. OF SEPARATE FGD SYSTEMS
OPERATIONAL	37	5,247,760	119
UNDER CONSTRUCTION	6	1,453,750	25
PLANNING*			
CONTRACT AWARDED	2	274,000	4
LETTER OF INTENT	0	0	0
REQUESTING/EVALUATING BIDS	2	178,000	3
CONSIDER ONLY	1	1,200,000	1
TOTAL	48	8,353,510	152

TABLE II SUMMARIZES THE PLANTS ACCORDING TO THE YEAR OF FGD STARTUP, AND THE SCFM CAPACITY.

TABLE II
STARTUP YEAR AND SCFM OF INDUSTRIAL BOILER FGD SYSTEMS

YEAR	UNITS	SCFM
1972	1	64,000
1973	4	621,300
1974	6	503,630
1975	12	1,473,300
1976	6	1,019,530
1977	4	342,000
1978	9	2,560,750
1979	3	295,000
1980	1	236,000
1983	1	1,200,000
UNDEFINED	1	38,000
TOTAL	48	8,353,510

*-NOTE: THERE ARE PROBABLY SEVERAL FGD SYSTEMS BEING PLANNED WHICH HAVE NOT BEEN LOCATED BY THIS SURVEY AND THERFORE ARE NOT COVERED IN THIS REPORT.

HIGHLIGHTS FROM THE CURRENT INDUSTRIAL BOILER FGD SURVEY ARE GIVEN BELOW:

ALYESKA PIPELINE SERVICE CO. HAVE BEEN OPERATING A FMC SODIUM HYDROXIDE SCRUBBING SYSTEM AT VALDEZ, ALASKA SINCE JUNE 1977. THE FGD SYSTEM REMOVES 96% OF SO2 GENERATED BY FIRING OIL WITH 0.1% SULFUR. DURING THE REPORT PERIOD, THE ACIDIC LIQUOR COLLECTED BY THE MIST ELIMINATOR HAS CAUSED CORROSION. THE PROBLEM HAS BEEN ALLEVIATED BY INCORPORATING HYDRAZINE SPRAYS AT THE BOTTOM OF THE DEMISTER.

ARCO/POLYMERS, INC. HAVE AWARDED A CONTRACT TO FMC FOR A DOUBLE ALKALI FGD SYSTEM TO BE INSTALLED AT THE MONACA, PENNSYLVANIA PLANT BY JUNE 1980. THE THREE IDENTICAL BOILERS (300,000 LBS/HR STEAM) WILL HAVE SEPARATE SCRUBBERS WITH A COMMON REGENERATION SYSTEM. THE TOTAL INSTALLED COST OF THE FGD SYSTEM IS REPORTED TO BE $8.0 MILLIONS.

C.A.M., A JOINT VENTURE OF UNION CARBIDE, AMOCO, AND MONSANTO, HAVE ANNOUNCED PLANS TO INSTALL A CO-GENERATION FACILITY NEAR HOUSTON, TEXAS. THE PROPOSED 600 MW (EQUIVALENT) POWER PLANT WILL GENERATE ELECTRICITY AND PROCESS STEAM FOR THE EXCLUSIVE USE OF NEARBY PLANTS OF THE THREE COMPANIES. THE TYPE OF COAL TO BE USED HAS NOT BEEN DECIDED YET. HOWEVER A FGD SYSTEM IS DEFINITELY UNDER CONSIDERATION. THE PLANT IS SCHEDULED TO GO ONSTREAM BY LATE 1983.

CATERPILLAR TRACTOR CO. CONTINUED OPERATIONS OF THE FGD SYSTEMS AT JOLIET AND MOSSVILLE, ILLINOIS PLANTS. THE OPERATIONAL PROBLEMS HAVE BEEN HEAVY FILTER CLOTH ATTRITION, AND EXCESSIVE WEAR OF THE FGD SYSTEM EQUIPMENT AT THE TWO PLANTS RESPECTIVELY.

CATERPILLAR TRACTOR CO. REPORTED THAT 4 FMC DOUBLE ALKALI FGD SYSTEMS WERE STARTED UP AT E. PEORIA, ILLINOIS IN APRIL 1978. THE SYSTEMS ARE DESIGNED TO REMOVE 90% OF SO2 FROM THE FLUE GASES GENERATED BY BURNING 3.2% SULFUR COAL. FGD OPERATIONS PROCEEDED FOR THIRTY DAYS BEFORE THE BOILER PLANT WAS SHUT DOWN FOR SUMMER.

CHEVERON U.S.A. INC. HAVE REPORTED THE STARTUP OF 3 FGD SYSTEMS AT THE BAKERSFIELD, CALIFORNIA OIL SITE IN JUNE/JULY 1978. THE SODIUM CARBONATE SCRUBBING SYSTEMS WERE SUPPLIED BY KOCH ENGINEERING AT A TOTAL COST OF $ 2.8 MILLIONS. EACH SYSTEM TREATS FLUE GASES FROM 6 IDENTICAL BOILERS, WHICH HAVE A TOTAL RATING OF 300 MM BTU/HR. THE STARTUP HAS BEEN SUCCESSFUL.

AT THE FIRESTONE TIRE AND RUBBER CO. IN POTTSTOWN,PENNSYLVANIA, THE FMC DOUBLE ALKALI DEMONSTARTION PLANT CONTINUED OPERATIONS. THE SYSTEM COMPONENTS, ESPECIALLY THE F.D. FAN AND THE SCRUBBER INTERNALS, HAVE EXPERIENCED SEVERE FLYASH ABRASION. DURING THE REPORT PERIOD, A NEW FAN WAS PUT IN WITH A HOUSING METALIZED BY 316 SS. THE MILD STEEL SPRAY RODS WERE REPLACED BY 316L SS.

THE FMC SODA ASH PLANT IN GREEN RIVER, WYOMING REPORTED THAT SO2 REMOVAL EFFICIENCIES OF 87-94% WERE ACHIEVED DEPENDING UPON THE L/G RATIO, AND RECIRCULATING LIQUOR PH. PH VARIATIONS, AND LEAKS IN THE DAMPERS WERE THE MAIN OPERATIONAL PROBLEMS DURING THE REPORT PERIOD.

GENERAL MOTORS IS CURRENTLY OPERATING FGD SYSTEMS AT FIVE INSTALLATIONS AROUND THE UNITED STATES. THE FOLLOWING UPDATE INFORMATION WAS PROVIDED BY PARMA, OHIO FOR THE DOUBLE ALKALI FGD SYSTEM:

> DURING THE REPORT PERIOD, THE FGD SYSTEM HAD AN AVAILABILITY OF 78%. NEW VACUUM AND LIME FEED PUMPS WILL BE INSTALLED, AND THE VACUUM FILTERS WILL BE REPLACED. DURING JUNE, THE FGD SYSTEM DEMONSTRATED AN AVAILABILITY OF 100%.

GRISSOM AIR FORCE BASE IN BUNNKER HILL, INDIANA REPORTED PLANS FOR A DOUBLE ALKALI FGD SYSTEM, WHICH WILL TREAT FLUE GASES FROM 2 EXISTING AND 1 PROPOSED BOILERS. THE BIDS ARE UNDER EVALUATION, AND THE SYSTEM IS SCHEDULED TO STARTUP IN AUGUST 1979.

AT KERR-MCGEE CHEMICAL CORP. IN TRONA, CALIFORNIA A SODIUM CARBONATE SCRUBBING SYSTEM WAS STARTED UP ALONGWITH THE NEW 1.3 MM TONS/YR SODA ASH PLANT. THE FLUE GASES FROM TWO 32-MW COKE, COAL, AND OIL-FIRED BOILERS ARE SCRUBBED BY THE SODA ASH END-LIQUOR IN TWO SCRUBBERS SUPPLIED BY COBUSTION EQT. THE MAJOR STARTUP PROBLEM WAS WEAKENING OF THE POLYPROPYLENE SIEVE TRAYS, WHICH WILL BE REPLACED BY 316L SS OR A HIGHER GRADE ALLOY.

THE MEAD PAPERBOARD CO. REPORTED 100% OPERABILITY FOR THE FGD SYSTEM DURING THE UPDATE PERIOD. THE SCRUBBER LINER WAS REPAIRED, AND MODIFICATIONS WERE PERFORMED AT THE SCRUBBER INLET TO ALLEVIATE FLYASH EROSION. THE MAINTENANCE WAS CARRIED OUT DURING A JUNE PULP MILL SHUTDOWN.

AT ST. JOE ZINC CO. IN MONACA, PENNSYLVANIA CONSTRUCTION CONTINUED ON THE CITRATE FGD SYSTEM, WHICH IS SCHEDULED TO STARTUP IN OCTOBER 1978. THE REGENERABLE SYSTEM WILL PRODUCE ELEMENTAL SULFUR, WHILE CONTROLLING EMISSIONS FROM A 60-MW (NOMINAL PEAK CAPACITY), COAL-FIRED BOILER. THIS SYSTEM WILL BE ALSO REPORTED IN THE EPA/PEDCO UTILITY FGD SURVEY, SINCE INFORMATION WILL BE GATHERED DURING THE ONE YEAR DEMONSTRATION PERIOD BY FOLLOWING A TYPICAL OPERATING UTILITY LOAD PROFILE.

TEXASGULF INC. HAS BEEN OPERATING TWO FGD SYSTEMS AT GRANGER, WYOMING SINCE SEPTEMBER 1976. THE SODIUM CARBONATE SCRUBBING SYSTEMS WERE SUPPLIED BY SWEMCO, INC. DURING THE REPORT PERIOD, THE DUCT WORK DOWNSTREAM OF SCRUBBERS WAS REPLACED BY 304 SS.

SECTION 1

INTRODUCTION

THIS REPORT ADDRESSES THE APPLICATION OF FLUE GAS DESULFURIZATION (FGD) TECHNOLOGY TO INDUSTRIAL BOILERS. THE NEED FOR SUCH A DOCUMENT HAS ARISEN AS A RESULT OF MORE STRINGENT EMISSION REGULATIONS DESIGNED TO REDUCE SULFUR DIOXIDE (SO2) EMISSIONS. IN VIEW OF THE DEVELOPMENTAL STATUS OF FGD TECHNOLOGY, EPA'S INDUSTRIAL ENVIRONMENTAL RESEARCH LABORATORY IN RESEARCH TRIANGLE PARK IS ESTABLISHING A PERIODICALLY UPDATED ENGINEERING APPLICATION/INFORMATION TRANSFER PROGRAM FOR INDUSTRIAL USE OF SO2 CONTROL TECHNOLOGY.

FIRST ISSUED IN DECEMBER 1977 AS A COMPREHENSIVE 900-PAGE REPORT ON SO2 CONTROL SYSTEMS ON ALL NONUTILITY COMBUSTION AND PROCESS SOURCES, THE CURRENT SERIES, IN THE INTEREST OF ECONOMY, ADDRESSES ONLY INDUSTRIAL BOILER APLICATIONS OF FGD TECHNOLOGY. THE FIRST ISSUE OF THIS SERIES, ENTITLED "EPA INDUSTRIAL BOILER FGD SURVEY: FIRST QUARTER 1978", PRESENTED DETAILED TECHNICAL INFORMATION ON INDUSTRIAL BOILERS FGD INSTALLATIONS. THE INFORMATION WAS OBTAINED BY A SURVEY OF PLANT PERSONNEL, CONTROL SYSTEM VENDORS, REGULATORY AGENCIES, AND ENGINEERING FIRMS.

THE CURRENT REPORT REPRESENTS AN EXPANSION OVER THE FIRST QUARTER 1978 REPORT WITH RESPECT TO BOTH THE NUMBER OF INSTALLATIONS, AND THE INFORMATION PRESENTED FOR EACH INSTALLATION. THE DATA ARE GIVEN IN TWO TYPES OF TABLES: ONE GIVES SUMMARY INFORMATION; THE OTHER, DETAILED INFORMATION. SUMMARY TABLES PRESENT INFORMATION AS FUNCTIONS OF TYPE OF CONTROL PROCESS, CONTROL SYSTEM VENDOR, DISPOSAL TECHNIQUES AND OPERATIONAL STATUS (OPERATIONAL, UNDER CONSTRUCTION, PLANNED, OR NOT OPERATING). NUMBERS, OPERATIONAL STATUS, AND OVERALL CAPACITY OF THE FGD SYSTEMS ARE SUMMERIZED IN THE EXECUTIVE SUMMARY. DETAILED INFORMATION INCLUDES: CONTROL SYSTEM DESIGN PARAMETERS, OPERATING EXPERIENCE, ECONOMICS, PROBLEMS AND SOLUTIONS, WASTE DISPOSAL TECHNIQUES, AND MAINTENANCE PRACTICES.

THE INFORMATION IN THIS REPORT WILL BE PERIODICALLY UPDATED AND EXPANDED BY MEANS OF TELEPHONE AND MAIL SURVEYS, AND PUBLISHED EVERY QUARTER. IN FUTURE REPORTS, THE DATA BASE ON SELECTED PLANTS WILL BE EXPANDED BY ON-SITE SURVEYS. INDIVIDUAL SURVEY REPORTS WILL ALSO BE PUBLISHED FOR THE RESPECTIVE PLANTS.

CERTAIN ENGINEERING SYMBOLS AND TERMS ARE USED VERY FREQUENTLY IN THE FIELD OF FGD TECHNOLOGY. TABULATED BELOW ARE THE DEFINITIONS OF PERTINENT SYMBOLS AND TERMS USED IN THIS REPORT.

SYMBOL/TERM	DEFINITION
ACFM	ACTUAL CUBIC FEET PER MINUTE, UNIT OF GAS FLOW RATE MEASURED AT ITS ACTUAL TEMPERATURE AND PRESSURE
AVAILABILITY	HOURS THE FGD SYSTEM WAS AVAILABLE (WHETHER OPERATED OR NOT) DIVIDED BY HOURS IN PERIOD, EXPRESSED AS PERCENTAGE
F	DEGREES FARENHEIT, UNIT OF TEMPERATURE
F.D.	FORCED DRAFT

SYMBOL/TERM	DEFINITION
GPM	GALLONS PER MINUTE
I.D.	INDUCED DRAFT
L/G	LIQUID TO GAS RATIO, RECIRCULATING LIQUID FLOW DIVIDED BY THE ACTUAL GAS FLOW, EXPRESSED AS PERCENTAGE
OPERABILITY	HOURS THE FGD SYSTEM OPERATED DIVIDED BY BOILER OPERATING HOURS IN PERIOD, EXPRESSED AS PERCENTAGE
PSIG	POUNDS PER SQUARE INCH, UNIT OF PRESSURE
RELIABILITY	HOURS THE FGD SYSTEM WAS OPERATED DIVIDED BY HOURS IT WAS CALLED UPON TO OPERATE, EXPRESSED AS PERCENTAGE
SCFM	STANDARD CUBIC FEET PER MINUTE, UNIT OF GAS FLOW RATE MEASURED AT 70 F AND 1 ATM. PRESSURE
T	TEMPERATURE
WG	WATER GAUGE, UNIT OF PRESSURE DROP EXPRESSED AS INCHES OF WATER
0/XX	WHEN THE EXACT MONTH OF A STARTUP DATE IS NOT AVAILABLE IT IS INDICATED BY A ZERO

ANYONE DESIRING TO RECEIVE THE QUARTERLY UPDATED VERSIONS OF THIS REPORT FREE OF COST, MAY REQUEST ADDITION OF HIS OR HER NAME TO THE MAILING LIST BY CONTACTING THE EPA PROJECT OFFICER OR THE CONTRACTOR.

SECTION 2

LIST OF INDUSTRIAL BOILERS WITH FGD SYSTEMS

INSTALLATION NAME	LOCATION	START-UP DATE	STATUS*	PAGE NUMBER+
ALYESKA PIPELINE SERVICE CO.	VALDEZ, ALASKA	6-77	1	25(5,13,16,23)
AMERICAN THREAD CO.	MARION, NORTH CAROLINA	0-73	1	27(5,15,16,21)
ARCO/POLYMERS, INC.	MONACA, PENNSYLVANIA	6-80	3	101(5,13,20,21)
ARMCO STEEL	MIDDLETOWN, OHIO	0-75	1	28(5,14,16,21)
BUNGE, INC.	CAIRO, ILLINOIS	9- 0	7	106(5,13, 0,21)
C.A.M.(CARBIDE-AMOCO-MONSANTO)	HOUSTON, TEXAS	10-83	6	102(5,14,20,24)
CANTON TEXTILES	CANTON, GEORGIA	6-74	1	30(5,13,16,22)
CARBORUNDUM ABRASIVES	BUFFALO, NEW YORK	0- 0	3	103(6,13,20,22)
CATERPILLAR TRACTOR CO.	EAST PEORIA, ILLINOIS	4-78	1	32(6,13,16,21)
CATERPILLAR TRACTOR CO.	JOLIET, ILLINOIS	9-74	1	33(6,15,16,21)
CATERPILLAR TRACTOR CO.	MAPLETON, ILLINOIS	10-76	2	95(6,13,19,21)
CATERPILLAR TRACTOR CO.	MORTON, ILLINOIS	1-78	1	35(6,15,16,21)
CATERPILLAR TRACTOR CO.	MOSSVILLE, ILLINOIS	10-75	1	36(6,13,16,21)
CHEVERON U.S.A. INC.	BAKERSFIELD, CALIFORNIA	4-79	5	104(6,14,20,23)
CHEVRON U.S.A. INC.	BAKERSFIELD, CALIFORNIA	7-78	1	38(7,14,16,23)
FIRESTONE TIRE AND RUBBER CO.	POTTSTOWN, PENNSYLVANIA	1-75	1	40(7,13,16,21)
FMC (SODA ASH PLANT)	GREEN RIVER, WYOMING	5-76	1	43(7,14,16,22)
GENERAL MOTORS CORPORATION	DAYTON, OHIO	9-74	1	45(7,13,16,22)
GENERAL MOTORS CORPORATION	PARMA, OHIO	3-74	1	48(7,14,17,21)
GENERAL MOTORS CORPORATION	PONTIAC, MICHIGAN	4-76	1	54(7,14,17,21)
GENERAL MOTORS CORPORATION	ST. LOUIS, MISSOURI	0-72	1	56(7,13,16,22)
GENERAL MOTORS CORPORATION	TONOWANDA, NEW YORK	6-75	1	57(8,14,17,21)
GEORGIA-PACIFIC PAPER CO.	CROSSETT, ARKANSAS	0-75	1	59(8,13,17,22)
GETTY OIL COMPANY	BAKERSFIELD, CALIFORNIA	6-77	1	60(8,14,17,22)
GETTY OIL COMPANY	BAKERSFIELD, CALIFORNIA	12-78	2	96(8,15,19,23)
GREAT SOUTHERN PAPER CO.	CEDAR SPRINGS, GEORGIA	0-75	1	62(8,13,17,23)
GREAT WESTERN SUGAR	BILLINGS, MONTANA	10-77	1	64(8,14,17,23)
GREAT WESTERN SUGAR	FINDLAY, OHIO	10-74	1	65(8,14,17,22)
GREAT WESTERN SUGAR	FORT MORGAN, COLORADO	10-76	1	66(9,14,17,23)

* STATUS CODES
- 0 - STATUS NOT DEFINED
- 1 - OPERATIONAL
- 2 - CONSTRUCTIONAL
- 3 - PLANNED-CONTRACT AWARDED
- 4 - PLANNED-LETTER OF INTENT SIGNED
- 5 - PLANNED-REQUESTING/EVALUATING BIDS
- 6 - PLANNED-CONSIDERING SO2 CONTROLS
- 7 - TERMINATED
- 8 - INDEFINITELY SHUT DOWN
- 9 - NEVER STARTED-UP

\+ FOR COMPLETE INFORMATION ON THE INDICATED FGD SYSTEM REFER TO FIRST PAGE LISTED. THE INSTALLATION APPEARS IN OTHER SUMMARY SECTIONS ON THE PAGES IN PARENTHESES.

SECTION 2 (CONTINUED)

LIST OF INDUSTRIAL BOILERS WITH FGD SYSTEMS

INSTALLATION NAME	LOCATION	START-UP DATE	STATUS*	PAGE NUMBER+
GREAT WESTERN SUGAR	FREEMONT,OHIO	10-78	2	97(9,14,19,22)
GREAT WESTERN SUGAR	GERING, NEBRASKA	10-75	1	67(9,14,17,23)
GREAT WESTERN SUGAR	GREELEY, COLORADO	10-75	1	69(9,14,17,23)
GREAT WESTERN SUGAR	LONGMONT, COLORADO	10-73	7	107(9,14, 0,23)
GREAT WESTERN SUGAR	LOVELAND, COLORADO	10-73	1	70(9,14,17,23)
GREAT WESTERN SUGAR	SCOTTS BLUFF, NEBRASKA	10-75	1	72(9,14,17,23)
GRISSOM AIR FORCE BASE	BUNKER HILL, INDIANA	9-79	5	105(10,14,20,21)
HARRIS MINING CO.	SPRUCE PINE, NORTH CAROLINA	0-73	7	108(10,15, 0,24)
TIT RAYONIER, INC.	FERNANDINA BEACH, FLORIDA	0-75	1	74(10,13,18,23)
KERR-MCGEE CHEMICAL CORP.	TRONA, CALIFORNIA	6-78	1	76(10,13,18,22)
MEAD PAPERBOARD CO.	STEVENSON, ALABAMA	0-75	1	78(10,13,18,21)
MINN-DAK FARMER'S COOPERATIVE	WAHPETON, NORTH DAKOTA	6-77	1	80(10,14,18,23)
MOBIL OIL COMPANY	BUTTONWILLOW, CALIFORNIA	9-78	2	98(10,14,19,22)
MOBIL OIL COMPANY	SAN ARDO, CALIFORNIA	0-74	1	82(11,14,18,22)
NEKOOSA PAPERS, INC.	ASHDOWN, ARKANSAS	2-76	1	83(11,13,18,21)
QUALITY MILLS, INC.	MT. AIRY, NORTH CAROLINA	5-70	7	109(11,13, 0,22)
RICKENBACKER AIR FORCE BASE	COLUMBUS, OHIO	3-76	1	85(11,15,18,22)
SHELLER GLOBE CORP.	NORFOLK, VIRGINIA	0-75	1	88(11,15,18,24)
ST. JOE ZINC CO.	MONACA, PENNSYLVANIA	10-78	2	99(11,13,19,22)
ST. REGIS PAPER CO.	CANTONMENT, FLORIDA	0-73	1	89(11,13,18,23)
TEXACO INCORPORATED	SAN ARDO, CALIFORNIA	11-73	1	91(12,13,18,23)
TEXACO INCORPORATED	SAN ARDO, CALIFORNIA	3-79	2	100(12,13,19,24)
TEXASGULF	GRANGER, WYOMING	9-76	1	93(12,15,18,23)
TRANSCO TEXTILES, INC.	AUGUSTA, GEORGIA	3-75	7	110(12,14, 0,23)
U.S. GYPSUM CORP.	OAKMONT, PENNSYLVANIA	0- 0	7	111(12,13, 0,21)

* STATUS CODES
- 0 - STATUS NOT DEFINED
- 1 - OPERATIONAL
- 2 - CONSTRUCTIONAL
- 3 - PLANNED-CONTRACT AWARDED
- 4 - PLANNED-LETTER OF INTENT SIGNED
- 5 - PLANNED-REQUESTING/EVALUATING BIDS
- 6 - PLANNED-CONSIDERING SO2 CONTROLS
- 7 - TERMINATED
- 8 - INDEFINITELY SHUT DOWN
- 9 - NEVER STARTED-UP

\+ FOR COMPLETE INFORMATION ON THE INDICATED FGD SYSTEM REFER TO FIRST PAGE LISTED. THE INSTALLATION APPEARS IN OTHER SUMMARY SECTIONS ON THE PAGES IN PARENTHESES.

SECTION 3

SUMMARY OF FGD SYSTEMS ON INDUSTRIAL BOILERS

COMPANY INFORMATION	SUMMARY OF RECENT OPERATIONS
ALYESKA PIPELINE SERVICE CO. VALDEZ, ALASKA FMC ENVIRONMENTAL EQUIPMENT FUEL OIL (0.03% - 0.1% SULFUR) 50,000 SCFM (DESIGN MAXIMUM) START-UP 6/77 SODIUM HYDROXIDE SCRUBBING STATUS - OPERATIONAL	THE ALYESKA FGD SYSTEM IS UNIQUE IN THAT IT WAS NOT INSTALLED PRIMARILY FOR CONTROL OF EMISSIONS, BUT TO TREAT GAS USED IN THE OIL STORAGE TANKS. OPERATIONS FOR THIS REPORT PERIOD CONTINUED IN A NEARLY PROBLEM-FREE MODE. THERE HAS BEEN NO DOWNTIME ATTRIBUTABLE TO THE FGD SYSTEM. CORROSION PROBLEMS HAVE BEEN DEALT WITH BY INTRODUCING HYDRAZINE SPRAYS UPSTREAM OF THE MIST ELIMINATOR.
AMERICAN THREAD CO. MARION, NORTH CAROLINA W.R. SLY MANUFACTURING CO. COAL (0.8% SULFUR); INTERRUPTIBLE NATURAL GAS 18,500 SCFM (TOTAL - 2 BOILERS) START-UP 0/73 CAUSTIC-WASTE STREAM STATUS - OPERATIONAL	AMERICAN THREAD IN MARION, NORTH CAROLINA USES A CAUSTIC SCRUBBING APPROACH TO CONTROL PARTICULATE AND SO2 EMISSIONS FROM TWO COAL FIRED BOILERS. THE PLANT REPORTED THAT IT IS STILL EXPERIENCING SCRUBBER AND ID FAN CORROSION AND VIBRATION PROBLEMS. PRESENT PLANS CALL FOR UPGRADING THE BOILER ID FAN TO BE ABLE TO FORCE THE FLUE GAS THROUGH THE SCRUBBER. PLANT REPORTED THE SCRUBBER TO BE DEMONSTRATING AN OPERABILITY OF 98%.
ARCO/POLYMERS, INC. MONACA, PENNSYLVANIA FMC ENVIRONMENTAL EQUIPMENT COAL (3.0% SULFUR) 236,000 SCFM (TOTAL - 3 BOILERS) START-UP 6/80 DOUBLE ALKALI (CONCENTRATED) STATUS - PLANNED-CONTRACT AWARDED	ARCO POLYMERS HAS AWARDED A CONTRACT TO FMC ENVIRONMENTAL EQUIPMENT DIVISION FOR A DOUBLE ALKALI FGD SYSTEM. THE SYSTEM WILL CONSIST OF A SEPARATE SCRUBBER TRAIN FOR EACH OF THE THREE IDENTICAL BOILERS. EACH ABSORBER MODULE WILL HAVE FOUR DISC-AND-DONUT TRAYS AND BE FOLLOWED BY A CHEVRON DEMISTER. THE TOTAL INSTALLED CAPITAL COST IS $8,000,000.
ARMCO STEEL MIDDLETOWN, OHIO KOCH ENGINEERING COAL (0.8% SULFUR) 84,000 SCFM (TOTAL - 2 BOILERS) START-UP 0/75 LIME SCRUBBING STATUS - OPERATIONAL	THIS CONTROL SYSTEM SERVES TWO MULTI-RETORT UNDERFEED STOKER, COAL-FIRED BOILERS EACH WITH A CAPACITY OF 100,000 LBS/HR STEAM. EARLIER BOILER PROBLEMS (HIGH EXCESS AIR) HAVE BEEN GENERALLY RECTIFIED BY A RETROFITTED BOILER CONTROL SYSTEM.
BUNGE, INC. CAIRO, ILLINOIS DRAVO CORP./NAT'L LIME ASS'N COAL (3% SULFUR) 44,000 SCFM (TOTAL - 2 BOILERS) START-UP 9/ 0 LIME SCRUBBING STATUS - TERMINATED	BUNGE PURCHASED THIS LIME FGD SYSTEM FOR TESTING PURPOSES. THE PLANT REPORTS THAT THE LEWIS SCRUBBER, A HORIZONTAL ROTARY SCRUBBER WITH INTERNAL CHAINS, PERFORMED WELL DURING THE TEST, EFFECTING 94% SO2 CONTROL. BUNGE IS CURRENTLY FIRING LOW SULFUR (0.9%) AND HAS NO PLANS TO REUSE THE SYSTEM.
C.A.M.(CARBIDE-AMOCO-MONSANTO) HOUSTON, TEXAS NOT SELECTED NOT SELECTED 1,200,000 SCFM (1 BOILER) START-UP 10/83 NOT SELECTED STATUS - PLANNED-CONSIDERING SO2 CONTROL	UNION CARBIDE, AMOCO, AND MONSANTO HAVE ENTERED INTO A JOINT VENTURE (C.A.M.) WHICH WILL PRODUCE A 600-MW (EQUIVALENT) COGENERATION FACILITY. THE PLANNED BOILER WILL PRODUCE ELECTRIC POWER AND STEAM FOR PROCESS REQUIREMENTS FOR THE 3 PLANTS. START-UP FOR THE POWER GENERATION FACILITY IS SCHEDULED FOR LATE 1983.
CANTON TEXTILES CANTON, GEORGIA FMC ENVIRONMENTAL EQUIPMENT COAL (0.8% SULFUR); INTERRUPTIBLE NATURAL GAS 25,000 SCFM (1 BOILER) START-UP 6/74 CAUSTIC- WASTE STREAM STATUS - OPERATIONAL	AT CANTON TEXTILES THE CONTROL SYSTEM CONSISTS OF AN FMC MEDIUM ENERGY VENTURI SCRUBBER AND UTILIZES A CAUSTIC WASTE STREAM FOR SO2 REMOVAL. THE UNIT HAS BEEN IN OPERATION SINCE JUNE 1974. CANTON AGAIN REPORTED NO OPERATIONAL PROBLEMS DURING THIS REPORT PERIOD. GAS FIRING WAS RESTARTED IN MID-MAY 1977, SO THE SCRUBBER WILL NOT OPERATE UNTIL COAL USE RESUMES IN OCT. THE PLANT REPORTS AN OPERABILITY OF 100% DURING COAL FIRING OPERATIONS.

SECTION 3 (CONTINUED)

SUMMARY OF FGD SYSTEMS ON INDUSTRIAL BOILERS

COMPANY INFORMATION	SUMMARY OF RECENT OPERATIONS
CARBORUNDUM ABRASIVES BUFFALO, NEW YORK CARBORUNDUM ENVIR. SYS. LTD. COAL (2% S AVERAGE, 3.2% S DESIGN MAX) 38,000 ACFM @ 350 F START-UP 0/ 0 LIME SCRUBBING STATUS - PLANNED-CONTRACT AWARDED	NO DEFINITE PLANS HAVE BEEN MADE FOR THE CONTROL OF SO2 EMISSIONS FROM THIS BOILER. THE FUTURE OF THE CONTROL SYSTEM WILL BE DETERMINED BY A REGULATORY AGENCY DECISION EXPECTED NEAR THE END OF 1978. THE CURRENTLY OPERATING VENTURI (L/G = 10) CONTROLS ONLY PARTICULATE, BUT TIE-INS HAVE BEEN PROVIDED FOR A LIME SCRUBBING SYSTEM USING A 6-STAGE SPRAY TOWER FOR SO2 CONTROL.
CATERPILLAR TRACTOR CO. EAST PEORIA, ILLINOIS FMC ENVIRONMENTAL EQUIPMENT COAL (3.2% SULFUR) 210,000 SCFM (TOTAL - 4 BOILERS) START-UP 4/78 DOUBLE ALKALI (CONCENTRATED) STATUS - OPERATIONAL	START-UP OCCURRED IN APRIL 1978. FGD OPERATIONS PROCEEDED FOR 30 DAYS BEFORE BOILER PLANT SHUTDOWN FOR THE SUMMER. THE 4 FMC CONCENTRATED DOUBLE ALKALI SYSTEMS WERE STILL IN A START-UP MODE WHEN SHUTDOWN OCCURRED. THE PLANT CONDUCTED NO PERFORMANCE TESTS. THE SYSTEMS ARE DESIGNED TO REMOVE 90% OF THE INLET SO2 WHILE THE BOILERS ARE BURNING HIGH-SULFUR ILLINOIS COAL.
CATERPILLAR TRACTOR CO. JOLIET, ILLINOIS ZURN INDUSTRIES COAL (3.2% SULFUR) 67,000 SCFM (TOTAL - 2 BOILERS) START-UP 9/74 DOUBLE ALKALI (DILUTE) STATUS - OPERATIONAL	THE FGD SYSTEM CONSISTS OF AN INDEPENDENT SCRUBBING TRAIN ON EACH OF TWO COAL-FIRED BOILERS. THESE BOILERS HAVE BEEN OPERATIONAL EACH HEATING SEASON SINCE OCTOBER 1974. SINCE THAT DATE, SCRUBBER AVAILABILITY HAS BEEN AVERAGING 80-85%. SEVERAL PROBLEMS PLAGUED 1977-1978 OPERATIONS: UNRELIABLE SO2 MONITORS, HIGH EROSION OF FILTER CLOTH, AND PLUGGED PIPELINES. SLUDGE FREEZING WAS ALSO A PROBLEM AREA.
CATERPILLAR TRACTOR CO. MAPLETON, ILLINOIS FMC ENVIRONMENTAL EQUIPMENT COAL (3.2% SULFUR) 157,000 SCFM (TOTAL - 3 BOILERS) START-UP 10/78 DOUBLE ALKALI (CONCENTRATED) STATUS - CONSTRUCTION	AT THE CATERPILLAR MAPLETON PLANT, FMC CONCENTRATED MODE DUAL ALKALI TECHNOLOGY WILL BE UTILIZED TO CONTROL SO2 EMISSIONS. THREE SCRUBBER SYSTEMS WILL START-UP IN OCT. 1978, CONTROLLING EMISSIONS FROM THREE COAL-FIRED BOILERS. CONSTRUCTION DELAYS, PRIMARILY ON THE STEAM GENERATION SIDE, HAVE DELAYED SYSTEM START-UP BACK TO THE 1978-79 HEATING SEASON. BY THE EARLY 1980'S THERE WILL BE 8 FMC FGD SYSTEMS AT THE TWO MAPLETON SITES.
CATERPILLAR TRACTOR CO. MORTON, ILLINOIS ZURN INDUSTRIES COAL (3.2% SULFUR) 40,000 SCFM (TOTAL -2 BOILERS) START-UP 1/78 DOUBLE ALKALI (DILUTE) STATUS - OPERATIONAL	THE CATERPILLAR MORTON PLANT UTILIZES ZURN INDUSTRIES' DILUTE MODE DOUBLE ALKALI TECHNOLOGY TO CONTROL EMISSIONS FROM THE STEAM PLANT. FGD SYSTEM START-UP OCCURRED AT THE BEGINNING OF 1978. OPERATIONS CONTINUED TO BE PROBLEM-FREE DURING THIS REPORT PERIOD. SOME BOILER-RELATED PROBLEMS WERE EXPERIENCED.
CATERPILLAR TRACTOR CO. MOSSVILLE, ILLINOIS FMC ENVIRONMENTAL EQUIPMENT COAL (3.2% SULFUR) 140,000 SCFM (TOTAL - 4 BOILERS) START-UP 10/75 DOUBLE ALKALI (CONCENTRATED) STATUS - OPERATIONAL	THE CATERPILLAR MOSSVILLE PLANT HAS UTILIZED AN FMC CONCENTRATED MODE FGD SYSTEM EACH HEATING SEASON SINCE OCTOBER 1975. THERE ARE FOUR COAL-FIRED BOILERS EACH BEING TREATED BY A SEPARATE SCRUBBING TRAIN. OPERATIONS FOR THE 1977-78 HEAT SEASON WERE MARKED BY EROSION IN THE SCRUBBER LINING, PIPING, PUMPS, AND CONTROL VALVES.
CHEVERON U.S.A. INC. BAKERSFIELD, CALIFORNIA NOT SELECTED OIL (1.1% SULFUR) 146,000 SCFM (TOTAL - 12 BOILERS) START-UP 4/79 SODIUM CARBONATE SCRUBBING STATUS - PLANNED-REQUESTING/EVALUATING BIDS	CHEVERON U.S.A. IS PLANNING TO INSTALL TWO MORE FGD SYSTEMS AT BAKERSFIELD OIL SITE. THESE WILL BE ONCE-THROUGH, SODIUM CARBONATE SCRUBBING SYSTEMS AND ARE SCHEDULED TO GO ON-STREAM BY APRIL 1979.

SECTION 3 (CONTINUED)

SUMMARY OF FGD SYSTEMS ON INDUSTRIAL BOILERS

COMPANY INFORMATION	SUMMARY OF RECENT OPERATIONS
CHEVRON U.S.A. INC. BAKERSFIELD, CALIFORNIA KOCH ENGINEERING OIL (1.1% SULFUR) 248,000 SCFM (TOTAL - 18 BOILERS) START-UP 7/76 SODIUM CARBONATE SCRUBBING STATUS - OPERATIONAL	CHEVRON U.S.A. HAS PURCHASED THREE FGD SYSTEMS FROM KOCH ENGINEERING. THE SODIUM CARBONATE SCRUBBING SYSTEMS WENT ON-STREAM IN JUNE/JULY 1976. THE STARTUP HAS BEEN SUCCESSFUL. THE SYSTEMS ARE DESIGNED TO REDUCE SO2 EMISSIONS BELOW 70 PPM.
FIRESTONE TIRE AND RUBBER CO. POTTSTOWN, PENNSYLVANIA FMC ENVIRONMENTAL EQUIPMENT 2.5-3.0% SULFUR COAL 8070 SCFM (13,000 ACFM @ 300 F) START-UP 1/75 DOUBLE ALKALI (CONCENTRATED) STATUS - OPERATIONAL	THE FGD SYSTEM AT FIRESTONE-POTTSTOWN CONSISTS OF AN FMC DOUBLE ALKALI DUAL THROAT VENTURI SCRUBBER. THIS SO2 CONTROL SYSTEM WAS BUILT AS A DEMONSTRATION PROJECT FUNDED BY FIRESTONE. THE SYSTEM OPERATED WITH AN AVAILABILITY VALUE OF 91% IN THE FALL QUARTER OF 1977. THE MAJOR PROBLEM AREA WAS EROSION OF FAN AND SPRAY NOZZLES BY FLYASH. THE FAN AND SPRY RODS WERE REPLACED IN APRIL 1978.
FMC (SODA ASH PLANT) GREEN RIVER, WYOMING FMC ENVIRONMENTAL EQUIPMENT COAL (1% SULFUR) 446,000 SCFM (TOTAL - 2 BOILERS) START-UP 5/76 SODIUM CARBONATE SCRUBBING STATUS - OPERATIONAL	THE FGD SYSTEM CONSISTS OF TWO FMC SODIUM SCRUBBING UNITS TO REMOVE SULFUR DIOXIDE AND PARTICULATE MATTER FROM THE FLUE GAS OF TWO BOILERS. SCRUBBER CORROSION HAS BEEN A PROBLEM. PLANT PERSONNEL FELT THAT THE LINING WAS IMPROPERLY APPLIED. FOAMING AND SEDIMENTATION HAS OCCURED IN THE SCRUBBER DUE TO IMPURITIES IN THE LIQUOR. PH VARIATIONS AND DAMPER LEAKS ARE OTHER PROBLEMS.
GENERAL MOTORS CORPORATION DAYTON, OHIO ENTOLETER, INC. COAL(0.7% - 2.0% SULFUR) 36,000 SCFM (TOTAL - 2 BOILERS) START-UP 9/74 SODIUM HYDROXIDE SCRUBBING STATUS - OPERATIONAL	THE FGD SYSTEM CONSISTS OF TWO ENTOLETER SODIUM HYDROXIDE SCRUBBING UNITS. THE UNITS HAVE BEEN OPERATIONAL SINCE SEPTEMBER 1974. THE AVERAGE OPERABILITY OF THE SYSTEM IS 95%. THE ORIGINAL 316L SS MIST ELIMINATORS ARE SEVERLY CORRODED, AND WILL BE REPLACED BY HASTEALLOY-G. PLUGGING OF RECIRCULATION LINES, CAUSED BY FLYASH, HAS BEEN A SERIOUS PROBLEM.
GENERAL MOTORS CORPORATION PARMA, OHIO GM ENVIRONMENTAL COAL (2.5% SULFUR* 7.1% ASH* 13,350 BTU/LB) 128,400 SCFM @ 70 F (TOTAL - 4 BOILERS) START-UP 3/74 DOUBLE ALKALI (DILUTE) STATUS - OPERATIONAL	THE FGD SYSTEM CONSISTS OF 4 GM-DESIGNED DOUBLE ALKALI SCRUBBERS OPERATIONAL ON 4 BOILERS. THE SCRUBBERS HANDLE A TOTAL 240,000 ACFM OF FLUE GAS. THE SCRUBBERS HAVE BEEN OPERATIONAL SINCE MARCH 1974. THE SYSTEM HAD AN AVAILABILITY OF 78% DURING THIS REPORT PERIOD. FILTRATION EQUIPMENT AND LIME SLURRY FEED PUMPS WILL BE REPLACED.
GENERAL MOTORS CORPORATION PONTIAC, MICHIGAN PEABODY ENGINEERING COAL (0.84% SULFUR) 107,300 SCFM (TOTAL - 2 BOILERS) START-UP 4/76 SODIUM HYDROXIDE SCRUBBING STATUS - OPERATIONAL	THE SCRUBBER SYSTEM CONSISTS OF TWO G.M. SODIUM UNITS FOR THE REMOVAL OF FLYASH AND SULFUR DIOXIDE FROM THE FLUE GAS OF TWO COAL-FIRED BOILERS. PLANT HAS BEEN EXPERIENCING FLYASH ABRASION IN PUMPS AND PIPING. PRESSURE FILTERS WILL BE INSTALLED IN THE SCRUBBER EFFLUENT LINES.
GENERAL MOTORS CORPORATION ST. LOUIS, MISSOURI A.D. LITTLE COAL (3.2% SULFUR) 64,000 SCFM (TOTAL - 2 BOILERS) START-UP 0/72 SODIUM HYDROXIDE SCRUBBING STATUS - OPERATIONAL	THIS SO2 CONTROL SYSTEM CONSISTS OF TWO GM DESIGNED SODIUM SCRUBBING UNITS OPERABLE ON TWO OF FOUR COAL-FIRED BOILERS. DURING THIS REPORT PERIOD, STACK CORROSION HAS BEEN THE MAIN PROBLEM. PLANS ARE BEING MADE TO REDESIGN DUCTWORK DOWNSTREAM OF THE SCRUBBER. THE SYSTEM IS PROVIDED WITH BYPASS AND 60 F REHEAT.

SECTION 3 (CONTINUED)

SUMMARY OF FGD SYSTEMS ON INDUSTRIAL BOILERS

COMPANY INFORMATION	SUMMARY OF RECENT OPERATIONS
GENERAL MOTORS CORPORATION TONAWANDA, NEW YORK FMC ENVIRONMENTAL EQUIPMENT COAL (1.2% SULFUR) 92,000 SCFM (TOTAL - 4 BOILERS) START-UP 6/75 SODIUM HYDROXIDE SCRUBBING STATUS - OPERATIONAL	THE FGD SYSTEM CONSISTS OF FOUR GM SODIUM SCRUBBING UNITS FOR THE REMOVAL OF PARTICULATES AND SULFUR DIOXIDE FROM FOUR COAL-FIRED BOILERS. THE SCRUBBERS ARE EQUIPPED WITH VENTURI SCRUBBERS FOR PARTICULATE REMOVAL. UNSTABLE PH CONTROL, PIPE EROSION AND STACK CORRISION ARE MAIN PROBLEM AREAS. REPLACEMENT OF CONTROL SENSORS, PIPING AND RELINING OF STACK ARE THE CORRECTIVE ACTIONS.
GEORGIA-PACIFIC PAPER CO. CROSSETT, ARKANSAS AIRPOL INDUSTRIES BARK AND OIL OR COAL (1% - 1.5% SULFUR) 220,000 SCFM (1 BOILER) START-UP 0/75 CAUSTIC WASTE STREAM STATUS - OPERATIONAL	THE FGD SYSTEM CONSISTS OF AN AIR-POL CAUSTIC SCRUBBING UNIT TO REMOVE SULFUR DIOXIDE AND PARTICULATE MATTER FROM THE FLUE GAS OF A COAL/BARK OR OIL/BARK POWER BOILER. THE SYSTEM IS PRECEDED BY CYCLONES FOR PARTICULATE REMOVAL. DURING THE REPORT PERIOD NO MAJOR PROBLEMS OCCURRED. THE BOILER-SCRUBBER HAS BEEN OFF-LINE A TOTAL OF ABOUT 15 DAYS SINCE JANUARY. GLASS LININGS IN THE SCRUBBER ARE REPLACED AS THEY FAIL.
GETTY OIL COMPANY BAKERSFIELD, CALIFORNIA FMC ENVIRONMENTAL EQUIPMENT COAL (1.1% SULFUR) 72,000 SCFM (TOTAL - 6 BOILERS) START-UP 6/77 SODIUM CARBONATE SCRUBBING STATUS - OPERATIONAL	THE SODIUM CARBONATE SCRUBBING FGD SYSTEM WAS RETROFITTED BY FMC IN JUNE 1977. THE SYSTEM HAS SO2 REMOVAL EFFICIENCY OF 90%. THE MAJOR MODIFICATIONS HAVE BEEN REPLACEMENT OF MESH DEMISTER BY CHEVRON TYPE AND ADDITION OF A KOCH FLEXITRAY IN TOP SECTION. SEVERAL TYPES OF PH CONTROLLERS ARE CURRENTLY UNDER TESTING. MILD STEEL RECYCLE PIPES WILL BE REPLACED BY 316L SS.
GETTY OIL COMPANY BAKERSFIELD, CALIFORNIA PROPRIATARY DESIGN CRUDE OIL (1.1% SULFUR) 993,750 SCFM (TOTAL-72 BOILERS) START-UP 12/78 SODIUM CARBONATE SCRUBBING STATUS - CONSTRUCTION	GETTY OIL COMPANY HAS DESIGNED 9 MORE SODIUM CARBONATE SCRUBBING FGD SYSTEMS IN-HOUSE. EACH SYSTEM, UNLIKE THE OPERATING UNITS, WILL HAVE A SCRUBBER PURCHASED FROM KOCH CONTAINING 3 FLEXITRAYS AND 1 FLEXIMESH DEMISTER. EACH SCRUBBER WILL TREAT GASES FROM 8 BOILERS. CONSTRUCTION IS IN PROGRESS AND STARTUP IS DUE DECEMBER 1978.
GREAT SOUTHERN PAPER CO. CEDAR SPRINGS, GEORGIA AIRPOL INDUSTRIES BARK AND COAL OR OIL (1.0%-2.0% SULFUR) 420,000 SCFM (TOTAL - 2 BOILERS) START-UP 0/75 CAUSTIC WASTE STREAM STATUS - OPERATIONAL	THE FGD SYSTEM CONSISTS OF TWO AIR-POL CAUSTIC SCRUBBERS TO CONTROL PARTICULATE AND SULFUR DIOXIDE FROM TWO POWER BOILERS. THE PRIMARY FUEL IS BARK/COAL (BARK/OIL IS FIRED OCCASIONALLY). THE FOLLOWING PROBLEMS HAVE BEEN ENCOUNTERED: EROSION AND PLUGGAGE OF THE PH PROBES, INTERNAL WEAR ON PUMPS, AND EROSION IN THE RECIRCULATION LINES.
GREAT WESTERN SUGAR BILLINGS, MONTANA GREAT WESTERN SUGAR COAL (0.7% SULFUR) 60,000 SCFM @ 70 F START-UP 10/77 AMMONIA-LADEN PROCESS WATER STATUS - OPERATIONAL	GREAT WESTERN SUGAR USES CONDENSATE PROCESS WATER PRIMARILY FOR PARTICULATE CONTROL. THE WATER HAS A HIGH PH (8.7) BUT THE SYSTEM HAS A LOW SO2 REMOVAL BECAUSE THE WATER IS INTRODUCED THROUGH PIPES RATHER THAN SPRAY NOZZLES.
GREAT WESTERN SUGAR FINDLAY, OHIO GREAT WESTERN SUGAR COAL (1.2% SULFUR, AVERAGE) 65,230 SCFM (TOTAL - 2 BOILERS) START-UP 10/74 SODIUM CARBONATE SCRUBBING STATUS - OPERATIONAL	THE VENTURI TOWER WAS MAINLY DESIGNED FOR PARTICULATE CONTROL, AND WAS STARTED UP IN OCT.'74. THE PARTICULATE AND SO2 REMOVAL EFFICIENCIES ARE 90 % AND 76% RESPECTIVELY. THE SO2 CONTROL IS CAUSED BY THE PROCESS CONDENSATE USED FOR SCRUBBING(PH=8.7). THE PLANT OPERATES ONLY DURING THE FALL QUARTER.

SECTION 3 (CONTINUED)

SUMMARY OF FGD SYSTEMS ON INDUSTRIAL BOILERS

COMPANY INFORMATION	SUMMARY OF RECENT OPERATIONS
GREAT WESTERN SUGAR FORT MORGAN, COLORADO GREAT WESTERN SUGAR COAL (1.2% SULFUR, AVERAGE) 65,230 SCFM (TOTAL - 2 BOILERS) START-UP 10/76 AMMONIA-LADEN PROCESS WATER STATUS - OPERATIONAL	THE VENTURY SCRUBBER WAS DESIGNED FOR PARTICULATE CONTROL AND STARTED IN OCT'76. THE CONDENSATE PROCESS WATER USED HAS A HIGH PH (8.7) WHICH REMOVES SOME SO2. THE PARTICULATE AND SO2 CONTROL EFFICIENCIES ARE 96% AND 48% RESPECTIVELY.
GREAT WESTERN SUGAR FREMONT,OHIO GREAT WESTERN SUGAR COAL (3% SULFUR) 40,000 SCFM @ 70 F (TOTAL - 2 BOILERS) START-UP 10/78 SODIUM CARBONATE SCRUBBING STATUS - CONSTRUCTION	PARTICULATE AND SO2 EMISSIONS WILL BE CONTROLLED BY A SCRUBBER/ABSORBER MODULE OF PROPRIETARY DESIGN. THE FLUE GAS IS GENERATED BY TWO UNION BOILERS, EACH RATED @ 70,000 LB/HR STEAM. STARTUP IS SCHEDULED FOR OCTOBER 1978.
GREAT WESTERN SUGAR GERING, NEBRASKA GREAT WESTERN SUGAR COAL (1.2% SULFUR, AVERAGE) 110,000 SCFM (TOTAL - 2 BOILERS) START-UP 10/75 AMMONIA-LADEN PROCESS WATER STATUS - OPERATIONAL	GREAT WESTERN SUGAR USES CONDENSATE PROCESS WATER PRIMARILY FOR PARTICULATE CONTROL. THE WATER HAS A HIGH PH (8.7) BUT THE SYSTEM HAS A LOW SO2 REMOVAL. THE VENTURY SCRUBBERS WERE INSTALLED IN OCT'75. PLANT OPERATES ONLY DURING FALL QUARTER.
GREAT WESTERN SUGAR GREELEY, COLORADO GREAT WESTERN SUGAR COAL (0.6% SULFUR) 25,000 SCFM @ 70 F START-UP 10/75 AMMONIA-LADEN PROCESS WATER STATUS - OPERATIONAL	GREAT WESTERN SUGAR USES CONDENSATE PROCESS WATER PRIMARILY FOR PARTICULATE CONTROL. THE WATER HAS A HIGH PH (8.7) BUT THE SYSTEM HAS A LOW SO2 REMOVAL BECAUSE THE WATER IS INTRODUCED THROUGH PIPES RATHER THAN SPRAY NOZZLES.
GREAT WESTERN SUGAR LONGMONT, COLORADO GREAT WESTERN SUGAR COAL (0.7% SULFUR) START-UP 10/73 AMMONIA-LADEN PROCESS WATER STATUS - TERMINATED	SUGAR PRODUCTION AND ALL PLANT OPERATIONS HAVE BEEN TERMINATED AT THE LONGMONT PLANT.
GREAT WESTERN SUGAR LOVELAND, COLORADO GREAT WESTERN SUGAR COAL (1.2% SULFUR, AVERAGE) 121,800 SCFM (TOTAL - 2 BOILERS) START-UP 10/73 AMMONIA-LADEN PROCESS WATER STATUS - OPERATIONAL	GREAT WESTERN SUGAR USES CONDENSATE PROCESS WATER PRIMARILY FOR PARTICULATE CONTROL. THE WATER HAS A HIGH PH (8.7) BUT THE SYSTEM HAS A LOW SO2 REMOVAL. THE SCRUBBERS WERE INSTALLED IN OCT'74. PLANT OPERATES ONLY DURING THE FALL QUARTER.
GREAT WESTERN SUGAR SCOTTS BLUFF, NEBRASKA GREAT WESTERN SUGAR COAL (1.2% SULFUR, AVERAGE) 65,230 SCFM (TOTAL - 2 BOILERS) START-UP 10/75 AMMONIA-LADEN PROCESS WATER STATUS - OPERATIONAL	THE PLANT OPERATES ONLY DURING FALL QUARTER OF EACH YEAR. THE VENTURI SCRUBBER WAS DESIGNED FOR PARTICULATE CONTROL AND WAS STARED IN OCT'75. THE PARTICULATE AND SO2 REMOVAL EFFICIENCIES ARE 95% AND 76% RESPECTIVELY. THE SO2 CONTROL IS CAUSED BY THE PROCESS CONDENSATE USED FOR SCRUBBING(PH=8.7).

SECTION 3 (CONTINUED)

SUMMARY OF FGD SYSTEMS ON INDUSTRIAL BOILERS

COMPANY INFORMATION	SUMMARY OF RECENT OPERATIONS
GRISSOM AIR FORCE BASE BUNKER HILL, INDIANA NOT SELECTED COAL (0.9% - 4.6% SULFUR) 32,000 SCFM (TOTAL - 3 BOILERS) START-UP 9/79 DOUBLE ALKALI (CONCENTRATED) STATUS - PLANNED-REQUESTING/EVALUATING BIDS	THE AIR FORCE HAS INITIATED A PROJECT WHICH WILL ADD ONE NEW COAL-FIRED BOILER TO THE EXISTING STEAM PLANT. A PORTION OF THE PROJECT INCLUDES AN FGD SYSTEM FOR THE NEW BOILER AND TWO EXISTING UNITS. THE A-E FIRM, FOSDICK AND HILMER, HAS SPECIFIED A CONCENTRATED DOUBLE ALKALI FGD SYSTEM, AND BIDS ARE CURRENTLY BEING EVALUATED. PROJECT COMPLETION IS SCHEDULED FOR AUGUST 30, 1979.
HARRIS MINING CO. SPRUCE PINE, NORTH CAROLINA W.W. SLY MANUFACTURING CO. COAL (0.8% SULFUR) 4,000 SCFM (TOTAL - 2 BOILERS) START-UP 0/73 WATER SCRUBBING (NA,NH3 OPTN.) STATUS - TERMINATED	THE FGD SYSTEM CONSISTS OF A W.W. SLY IMPINJET SCRUBBER CURRENTLY BEING USED STRICTLY AS A PARTICULATE CONTROL DEVICE. THE SYSTEM HAS THE CAPABILITY OF SCRUBBING WITH AMMONIA OR CAUSTIC IF NECESSARY. HOWEVER, AS LONG AS CURRENT LOW-SULFUR COAL SUPPLIES LAST, THERE IS NO NEED FOR SO2 CONTROLS.
ITT RAYONIER, INC. FERNANDINA BEACH, FLORIDA AIRPOL INDUSTRIES BARK AND OIL (2% - 2.5% SULFUR) 201,000 SCFM (TOTAL - 2 BOILERS) START-UP 0/75 SODIUM HYDROXIDE SCRUBBING STATUS - OPERATIONAL	AT FERNANDINA BEACH, ITT RAYONIER FIRES BARK AND OIL IN TWO OF THE FOUR PROCESS STEAM BOILERS. PARTICULATE AND SO2 EMISSIONS ARE CONTROLLED IN TWO AIRPOL SCRUBBING TRAINS. THE PLANT HAS PERMANENTLY CONVERTED FROM WASTE STREAM CAUSTIC SCRUBBING TO A SODIUM HYDROXIDE CONTROL. APPROXIMATE SCRUBBER OPERABILITY SINCE JAN. HAS BEEN 95%.
KERR-MCGEE CHEMICAL CORP. TRONA, CALIFORNIA COMBUSTION EQUIPMENT ASSOC. COKE, COAL, OIL (0.5% - 5% SULFUR) 726,000 ACFM @ 320 DEGREES F START-UP 6/78 SODIUM CARBONATE SCRUBBING STATUS - OPERATIONAL	THE FGD SYSTEM CONSISTS OF A COMBUSTION EQUIPMENT (CEA) SODA ASH SCRUBBING SYSTEM WHICH REMOVES FLY-ASH AND SULFUR DIOXIDE FROM THE FLUE GAS OF TWO COAL-FIRED BOILERS. THE SYSTEM WENT ON STREAM IN JUNE. THE BOILERS HAVE USED UP TO 80% COAL FEED, AND 100% OIL FEED. POLYPROYLENE TRAYS WILL BE REPLACED BY 316L SS OR A HIGHER GRADE ALLOY.
MEAD PAPERBOARD CO. STEVENSON, ALABAMA AIRPOL INDUSTRIES OIL (1.5% - 3% SULFUR) 100,000 ACFM @ 450 F (TOTAL - 2 BOILERS) START-UP 0/75 SODIUM HYDROXIDE SCRUBBING STATUS - OPERATIONAL	AIRPOL INDUSTRIES HAS SUPPLIED A PARTICULATE AND SO2 CONTROL SYSTEM FOR THE TWO OIL-FIRED BOILERS AT THIS MEAD PULP MILL. DURING A JUNE PULP MILL SHUTDOWN, THE RUBBER LINER IN THE ABSORBER WAS REPAIRED. ALSO, MODIFICATIONS WERE IMPLEMENTED AT THE ABSORBER MODULE INLET WITH THE INTENT OF PREVENTING FLY ASH EROSION IN THE MODULE. FGD SYSTEM OPERABILITY WAS REPORTED TO BE 100%.
MINN-DAK FARMER'S COOPERATIVE WAHPETON, NORTH DAKOTA KOCH ENGINEERING LIGNITE (1.0% SULFUR) 160,000 ACFM @ 350 F (TOTAL - 2 BOILERS) START-UP 6/77 AMMONIA SCRUBBING STATUS - OPERATIONAL	KOCH ENGINEERING HAS SUPPLIED TWO AMMONIA-BASED SO2 CONTROL SYSTEMS FOR THESE COAL-FIRED BOILERS. EACH YEAR THE PLANT ONLY PRODUCES SUGAR DURING THE SEPT. - FEB. PERIOD. THEREFORE, THE SCRUBBER DID NOT OPERATE DURING THIS REPORT PERIOD. THE PLANT HAS MADE SOME FGD PROCESS MODIFICATIONS DURING THE SCHEDULED SHUTDOWN.
MOBIL OIL COMPANY BUTTONWILLOW, CALIFORNIA HEATER TECHNOLOGY OIL (1.1% SULFUR) 42,000 SCFM (TOTAL - 7 BOILERS) START-UP 9/78 SODIUM CARBONATE SCRUBBING STATUS - CONSTRUCTION	MOBIL OIL HAS PURCHASED SEVEN EDUCTOR SCRUBBERS FROM HEATER TECHNOLOGY FOR THE CONTROL OF EMISSIONS FROM 7 STEAM GENERATORS(25 MM BTU/HR). EACH SYSTEMS CONSISTS OF A VENTURI SECTION, A RECYCLE TANK, AND AN OUTLET DUCT WITH A MIST ELIMINATOR. START-UP IS SCHEDULED FOR SEPT. 1978.

SECTION 3 (CONTINUED)

SUMMARY OF FGD SYSTEMS ON INDUSTRIAL BOILERS

COMPANY INFORMATION	SUMMARY OF RECENT OPERATIONS
MOBIL OIL COMPANY SAN ARDO, CALIFORNIA MOBIL OIL COMPANY OIL (2.0% - 2.25% SULFUR) 182,000 SCFM (TOTAL - 30 BOILERS) START-UP 0/74 SODIUM HYDROXIDE SCRUBBING STATUS - OPERATIONAL	MOBIL HAS DESIGNED THE FGD SYSTEM BY IN-HOUSE ENGINEERING BASED ON A PATENTED SODIUM HYDROXIDE SCRUBBING PROCESS. CORROSION OF MIST ELIMINATOR AND I.D. FAN BLADES HAVE BEEN THE MAJOR PROBLEM AREAS. THE SO2 REMOVAL EFFICIENCY IS CHANGED BY ADJUSTING THE PH OF INLET LIQUOR.
NEKOOSA PAPERS, INC. ASHDOWN, ARKANSAS AIRPOL INDUSTRIES COAL (1%-1.5% SULFUR) 211,000 SCFM @ 355 F (TOTAL - 1 BOILER) START-UP 2/76 CAUSTIC SCRUBBING STATUS - OPERATIONAL	THE FGD SYSTEM CONSISTS OF TWO AIR-POL CAUSTIC SCRUBBERS CONTROLLING FLYASH AND SULFUR DIOXIDE. THE PLANT REPORTED NO MAJOR PROBLEMS FOR THIS PERIOD. SCRUBBER HOURS MATCHED BOILER HOURS (2153) FOR THE SECOND QUARTER, YEILDING AN OPERABILITY OF 100%. THE BOILER WAS OPERATING AT 40%-60% CAPACITY.
QUALITY MILLS, INC. MT. AIRY, NORTH CAROLINA COMMERCIAL FABRICATION & MAC FUEL OIL START-UP 5/70 WATER SCRUBBING STATUS - TERMINATED	THIS SMALL INDUSTRIAL BOILER UTILIZED A COMMERICAL FABRICATION AND MACHINE (CFM) SCRUB-AIR SYSTEM TO CONTROL EMISSIONS FROM THE COAL-FIRED BOILER FROM MAY 1970 TO DECEMBER 1973. AT THAT TIME THEY CONVERTED TO FIRING LOW-SULFUR OIL, REMOVING THE NEED TO CONTROL EMISSIONS.
RICKENBACKER AIR FORCE BASE COLUMBUS, OHIO RESEARCH-COTTRELL/BAHCO COAL (3.6% SULFUR) 50,000 SCFM (1 BOILER) START-UP 3/76 LIMESTONE SCRUBBING STATUS - OPERATIONAL	THIS RESEARCH-COTTRELL/BAHCO LIME FGD UNIT WAS FIRST PLACED IN SERVICE MARCH 11, 1976. THE SYSTEM WAS SWITCHED OVER TO LIMESTONE IN APRIL 1977, AND HAS REMAINED IN THAT OPERATING MODE TO DATE. DURING THE SECOND QUARTER OF 1978, THE FGD SYSTEM HAS DEMONSTRATED AN OPERABILITY OF 100%. THE PLANT REPORTS NO REMAINING PROBLEM AREAS.
SHELLER GLOBE CORP. NORFOLK, VIRGINIA W.W. SLY MANUFACTURING CO. COAL (LESS THAN 1% SULFUR) 8,000 SCFM (TOTAL - 2 BOILERS) START-UP 0/75 SODIUM HYDROXIDE SCRUBBING STATUS - OPERATIONAL	AFTER SYSTEM RESTART IN OCTOBER 1977, THERE HAVE BEEN NO PROBLEMS RESULTING FROM EITHER BOILER OR SCRUBBER OPERATIONS. THE PLANT UNDER WENT A VIRGINIA EPA INSPECTION AND WAS FOUND TO BE IN COMPLIANCE WITH THE PARTICULATE EMISSION REGULATIONS.
ST. JOE ZINC CO. MONACA, PENNSYLVANIA BUREAU OF MINES COAL (2.5%-4.5% SULFUR) 104,000 SCFM (TOTAL - 1 BOILER) START-UP 10/78 CITRATE PROCESS STATUS - CONSTRUCTION	• CONSTRUCTION CONTINUES ON THE CITRATE PROCESS SCRUBBING SYSTEM WHICH WILL CONTROL SO2 EMISSIONS FROM A 60-MW (NOMINAL PEAK CAPACITY) COAL-FIRED POWER GENERATING UNIT. STARTUP WILL BE OCT'78. • THIS SYSTEM WILL BE ALSO REPORTED IN THE EPA/PEDCO UTILITY FGD SURVEY, SINCE INFORMATION WILL BE GATHERED DURING THE ONE YEAR DEMONSTRATION PERIOD BY FOLLOWING A TYPICAL UTILITY OPERATING LOAD PROFILE.
ST. REGIS PAPER CO. CANTONMENT, FLORIDA AIRPOL INDUSTRIES BARK AND GAS OR OIL (LESS THAN 1% SULFUR) 115,000 SCFM (1 BOILER) START-UP 0/73 CAUSTIC SCRUBBING STATUS - OPERATIONAL	AIR-POL HAS SUPPLIED THE CAUSTIC SCRUBBING FGD SYSTEM TO REMOVE PARTICULATE AND SULFUR DIOXIDE FROM THE FLUE GAS OF A BARK BOILER, WHICH CAN ALSO FIRE NATURAL GAS AND OIL. PLANT HAS NOT YET THE FEED WATER SOURCE TO ALLEVIATE PROBLEMS DUE TO FIBERS PLUGGING LINES AND MIST ELIMINATOR. PLANT INDICATED THAT THIS REPORT HAD PREVIOUSLY REPORTED TOO HIGH A FUEL SULFUR CONTENT.

SECTION 3 (CONTINUED)

SUMMARY OF FGD SYSTEMS ON INDUSTRIAL BOILERS

COMPANY INFORMATION	SUMMARY OF RECENT OPERATIONS
TEXACO INCORPORATED SAN ARDO, CALIFORNIA CEILCOTE OIL (1.7% SULFUR) 366,000 SCFM (TOTAL - 24 BOILERS) START-UP 11/73 SODIUM HYDROXIDE SCRUBBING STATUS - OPERATIONAL	EACH FGD SYSTEM CONSISTS OF A HORIZONTAL, PACKED-BED SCRUBBER FOR EACH OF THE OIL-FIRED BOILERS. POOR SCRUBBING LIQUOR QUALITY CAUSES PLUGGING OF PACKED BEDS AND SPRAY NOZZLES. THE SYSTEMS HAVE HIGH MAINTENANCE REQUIREMENTS AND RELATIVELY LOW SO2 REMOVAL (73%). TEXACO IS PLANNING TO PHASE OUT THIS GROUP OF SCRUBBERS BY LATE 1979.
TEXACO INCORPORATED SAN ARDO, CALIFORNIA DUCON COMPANY OIL (1.7% SULFUR) 117,000 SCFM (TOTAL - 9 BOILERS) START-UP 3/79 SODIUM CARBONATE SCRUBBING STATUS - CONSTRUCTION	TEXACO IS PLANNING TO PHASE OUT THE EXISTING FGD SYSTEMS AT THEIR SAN ARDO, CALIFORNIA OIL SITE. AS THE FIRST STEP OF THE PROGRAM, 9 OF THE PRESENT 31 SCRUBBERS ON 50 MM BTU/HR STEAM GENERATORS ARE BEING REPLACED BY A NEW SYSTEM, SUPPLIED BY DUCON COMPANY. THE NEW FGD SYSTEM WILL CONSIST OF THREE TRAINS OF A VENTURI SCRUBBER/SPRAY ABSORBER COMBINATION. THE SYSTEM IS UNDER CONSTRUCTION.
TEXASGULF GRANGER, WYOMING SWEMCO INC. OIL (1.1% SULFUR) 140,000 SCFM (TOTAL - 2 BOILERS) START-UP 9/76 SODIUM CARBONATE SCRUBBING STATUS - OPERATIONAL	THIS SODIUM CARBONATE SCRUBBING SYSTEM WAS DESIGNED BY SWEMCO. SO2 ABSORPTION OCCURS IN THE QUENCHER AND THE SIEVE-TRAY ABSORBER MODULE. AN INTERESTING FEATURE IS AN INTERNAL DAMPER WHICH ALLOWS A 4 TO 1 TURNDOWN RATIO. INITIAL PROBLEMS INCLUDED PLUGGING CAUSED BY FLYASH, AND CORROSION IN RECIRCULATION PIPING, CAUSED BY THE SLIGHTLY ACIDIC SCRUBBING LIQUOR.
TRANSCO TEXTILES, INC. AUGUSTA, GEORGIA FMC ENVIRONMENTAL EQUIPMENT FUEL OIL (2% MAX. SULFUR) 50,000 ACFM START-UP 3/75 SODIUM CARBONATE SCRUBBING STATUS - TERMINATED	THE FGD OPERATIONS HAVE BEEN TERMINATED FOR AN INDEFINITE PERIOD. THE PLANT BURNS NUMBER 6 FUEL OIL AND THE SULFUR DIOXIDE EMISSIONS ARE 50% OF THE EXISTING REGULATIONS. THE BOILER IS RATED AT 20 MW (EQUIVALENT) AND PRODUCES 150,000 LBS/HR STEAM. WHEN OPERATIONAL, THE SCRUBBER SYSTEM HAD FLUE GAS VOLUME OF 50,000 ACFM AT 140 DEGREES F. SYSTEM START-UP OCCURRED IN MARCH 1975 AND SCRUBBER OPERATIONS WERE TERMINATED LATER IN THE SAME YEAR. THERE ARE CURRENTLY NO PLANS TO INITIATE OPERATIONS.
U.S. GYPSUM CORP. OAKMONT, PENNSYLVANIA AIRPOL INDUSTRIES COAL START-UP 0/ 0 DOUBLE ALKALI (DILUTE) STATUS - TERMINATED	AN AIRPOL DOUBLE ALKALI SCRUBBING SYSTEM IS ON-SITE, INSTALLED, AND READY FOR OPERATIONS. HOWEVER, US GYPSUM DECIDED NOT TO INITIATE PRODUCTION AT THIS FACILITY FOR ECONOMIC REASONS. A CHECK DURING THIS REPORT PERIOD REVEALED THAT THE PLANT HAS NOT BEEN STARTED YET.

SECTION 4

SUMMARY BY VENDOR OF FGD SYSTEMS ON INDUSTRIAL BOILERS

VENDOR	INSTALLATION NAME / LOCATION	CONTROL SYSTEM PROCESS
A.D. LITTLE	GENERAL MOTORS CORPORATION ST. LOUIS, MISSOURI	SODIUM HYDROXIDE SCRUBBING
AIRPOL INDUSTRIES	GEORGIA-PACIFIC PAPER CO. CROSSETT, ARKANSAS	CAUSTIC WASTE STREAM
	GREAT SOUTHERN PAPER CO. CEDAR SPRINGS, GEORGIA	CAUSTIC WASTE STREAM
	ITT RAYONIER, INC. FERNANDINA BEACH, FLORIDA	SODIUM HYDROXIDE SCRUBBING
	MEAD PAPERBOARD CO. STEVENSON, ALABAMA	SODIUM HYDROXIDE SCRUBBING
	NEKOOSA PAPERS, INC. ASHDOWN, ARKANSAS	CAUSTIC SCRUBBING
	ST. REGIS PAPER CO. CANTONMENT, FLORIDA	CAUSTIC SCRUBBING
	U.S. GYPSUM CORP. OAKMONT, PENNSYLVANIA	DOUBLE ALKALI (DILUTE)
BUREAU OF MINES	ST. JOE ZINC CO. MONACA, PENNSYLVANIA	CITRATE PROCESS
CARBORUNDUM ENVIR. SYS. LTD.	CARBORUNDUM ABRASIVES BUFFALO, NEW YORK	LIME SCRUBBING
CEILCOTE	TEXACO INCORPORATED SAN ARDO, CALIFORNIA	SODIUM HYDROXIDE SCRUBBING
COMBUSTION EQUIPMENT ASSOC.	KERR-MCGEE CHEMICAL CORP. TRONA, CALIFORNIA	SODIUM CARBONATE SCRUBBING
COMMERCIAL FABRICATION & MAC	QUALITY MILLS, INC. MT. AIRY, NORTH CAROLINA	WATER SCRUBBING
DRAVO CORP./NAT'L LIME ASS'N	BUNGE, INC. CAIRO, ILLINOIS	LIME SCRUBBING
DUCON COMPANY	TEXACO INCORPORATED SAN ARDO, CALIFORNIA	SODIUM CARBONATE SCRUBBING
ENTOLETER, INC.	GENERAL MOTORS CORPORATION DAYTON, OHIO	SODIUM HYDROXIDE SCRUBBING
FMC ENVIRONMENTAL EQUIPMENT	ALYESKA PIPELINE SERVICE CO. VALDEZ, ALASKA	SODIUM HYDROXIDE SCRUBBING
	ARCO/POLYMERS, INC. MONACA, PENNSYLVANIA	DOUBLE ALKALI (CONCENTRATED)
	CANTON TEXTILES CANTON, GEORGIA	CAUSTIC- WASTE STREAM
	CATERPILLAR TRACTOR CO. EAST PEORIA, ILLINOIS	DOUBLE ALKALI (CONCENTRATED)
	CATERPILLAR TRACTOR CO. MAPLETON, ILLINOIS	DOUBLE ALKALI (CONCENTRATED)
	CATERPILLAR TRACTOR CO. MOSSVILLE, ILLINOIS	DOUBLE ALKALI (CONCENTRATED)
	FIRESTONE TIRE AND RUBBER CO. POTTSTOWN, PENNSYLVANIA	DOUBLE ALKALI (CONCENTRATED)

SECTION 4 (CONTINUED)

SUMMARY BY VENDOR OF FGD SYSTEMS ON INDUSTRIAL BOILERS

VENDOR	INSTALLATION NAME / LOCATION	CONTROL SYSTEM PROCESS
FMC ENVIRONMENTAL EQUIPMENT	FMC (SODA ASH PLANT) GREEN RIVER, WYOMING	SODIUM CARBONATE SCRUBBING
	GENERAL MOTORS CORPORATION TONOWANDA, NEW YORK	SODIUM HYDROXIDE SCRUBBING
	GETTY OIL COMPANY BAKERSFIELD, CALIFORNIA	SODIUM CARBONATE SCRUBBING
	TRANSCO TEXTILES, INC. AUGUSTA, GEORGIA	SODIUM CARBONATE SCRUBBING
GM ENVIRONMENTAL	GENERAL MOTORS CORPORATION PARMA, OHIO	DOUBLE ALKALI (DILUTE)
GREAT WESTERN SUGAR	GREAT WESTERN SUGAR BILLINGS, MONTANA	AMMONIA-LADEN PROCESS WATER
	GREAT WESTERN SUGAR FINDLAY, OHIO	SODIUM CARBONATE SCRUBBING
	GREAT WESTERN SUGAR FORT MORGAN, COLORADO	AMMONIA-LADEN PROCESS WATER
	GREAT WESTERN SUGAR FREEMONT,OHIO	SODIUM CARBONATE SCRUBBING
	GREAT WESTERN SUGAR GERING, NEBRASKA	AMMONIA-LADEN PROCESS WATER
	GREAT WESTERN SUGAR GREELEY, COLORADO	AMMONIA-LADEN PROCESS WATER
	GREAT WESTERN SUGAR LONGMONT, COLORADO	AMMONIA-LADEN PROCESS WATER
	GREAT WESTERN SUGAR LOVELAND, COLORADO	AMMONIA-LADEN PROCESS WATER
	GREAT WESTERN SUGAR SCOTTS BLUFF, NEBRASKA	AMMONIA-LADEN PROCESS WATER
HEATER TECHNOLOGY	MOBIL OIL COMPANY BUTTONWILLOW, CALIFORNIA	SODIUM CARBONATE SCRUBBING
KOCH ENGINEERING	ARMCO STEEL MIDDLETOWN, OHIO	LIME SCRUBBING
	CHEVRON U.S.A. INC. BAKERSFIELD, CALIFORNIA	SODIUM CARBONATE SCRUBBING
	MINN-DAK FARMER'S COOPERATIVE WAHPETON, NORTH DAKOTA	AMMONIA SCRUBBING
MOBIL OIL COMPANY	MOBIL OIL COMPANY SAN ARDO, CALIFORNIA	SODIUM HYDROXIDE SCRUBBING
NOT SELECTED	C.A.M.(CARBIDE-AMOCO-MONSANTO) HOUSTON, TEXAS	NOT SELECTED
	CHEVRON U.S.A. INC. BAKERSFIELD, CALIFORNIA	SODIUM CARBONATE SCRUBBING
	GRISSOM AIR FORCE BASE BUNKER HILL, INDIANA	DOUBLE ALKALI (CONCENTRATED)
PEABODY ENGINEERING	GENERAL MOTORS CORPORATION PONTIAC, MICHIGAN	SODIUM HYDROXIDE SCRUBBING

SECTION 4 (CONTINUED)

SUMMARY BY VENDOR OF FGD SYSTEMS ON INDUSTRIAL BOILERS

VENDOR	INSTALLATION NAME / LOCATION	CONTROL SYSTEM PROCESS
PROPRIATARY DESIGN	GETTY OIL COMPANY BAKERSFIELD, CALIFORNIA	SODIUM CARBONATE SCRUBBING
RESEARCH-COTTRELL/BAHCO	RICKENBACKER AIR FORCE BASE COLUMBUS, OHIO	LIMESTONE SCRUBBING
SWEMCO INC.	TEXASGULF GRANGER, WYOMING	SODIUM CARBONATE SCRUBBING
W.W. SLY MANUFACTURING CO.	AMERICAN THREAD CO. MARION, NORTH CAROLINA	CAUSTIC-WASTE STREAM
	HARRIS MINING CO. SPRUCE PINE, NORTH CAROLINA	WATER SCRUBBING (NA,NH3 OPTN.)
	SHELLER GLOBE CORP. NORFOLK, VIRGINIA	SODIUM HYDROXIDE SCRUBBING
ZURN INDUSTRIES	CATERPILLAR TRACTOR CO. JOLIET, ILLINOIS	DOUBLE ALKALI (DILUTE)
	CATERPILLAR TRACTOR CO. MORTON, ILLINOIS	DOUBLE ALKALI (DILUTE)

SECTION 5

OPERATIONAL FGD SYSTEMS ON INDUSTRIAL BOILERS

COMPANY/LOCATION/FUEL	NEW/ RETROFIT	UNIT SIZE (SCFM)	PROCESS/VENDOR	START-UP MO/YR
ALYESKA PIPELINE SERVICE CO. VALDEZ, ALASKA FUEL OIL (0.05% - 0.1% SULFUR)	NEW	50,000	SODIUM HYDROXIDE SCRUBBING FMC ENVIRONMENTAL EQUIPMENT	6/77
AMERICAN THREAD CO. MARION, NORTH CAROLINA COAL (0.8% SULFUR); INTERRUPTIBLE NATURAL GAS	RETROFIT	18,500	CAUSTIC-WASTE STREAM W.W. SLY MANUFACTURING CO.	0/73
ARMCO STEEL MIDDLETOWN, OHIO COAL (0.8% SULFUR)	RETROFIT	84,000	LIME SCRUBBING KOCH ENGINEERING	0/75
CANTON TEXTILES CANTON, GEORGIA COAL (0.8% SULFUR); INTERRUPTIBLE NATURAL GAS	RETROFIT	25,000	CAUSTIC- WASTE STREAM FMC ENVIRONMENTAL EQUIPMENT	6/74
CATERPILLAR TRACTOR CO. EAST PEORIA, ILLINOIS COAL (3.2% SULFUR)	2 NEW,2 RETROFIT	210,000	DOUBLE ALKALI (CONCENTRATED) FMC ENVIRONMENTAL EQUIPMENT	4/78
CATERPILLAR TRACTOR CO. MOSSVILLE, ILLINOIS COAL (3.2% SULFUR)	1 NEW 1 RETROFIT	140,000	DOUBLE ALKALI (CONCENTRATED) FMC ENVIRONMENTAL EQUIPMENT	10/75
CATERPILLAR TRACTOR CO. JOLIET, ILLINOIS COAL (3.2% SULFUR)	RETROFIT	67,000	DOUBLE ALKALI (DILUTE) ZURN INDUSTRIES	9/74
CATERPILLAR TRACTOR CO. MORTON, ILLINOIS COAL (3.2% SULFUR)	RETROFIT	40,000	DOUBLE ALKALI (DILUTE) ZURN INDUSTRIES	1/78
CHEVRON U.S.A. INC. BAKERSFIELD, CALIFORNIA OIL (1.1% SULFUR)	RETROFIT	248,000	SODIUM CARBONATE SCRUBBING KOCH ENGINEERING	7/78
FIRESTONE TIRE AND RUBBER CO. POTTSTOWN, PENNSYLVANIA 2.5-3.0% SULFUR COAL	RETROFIT	8070	DOUBLE ALKALI (CONCENTRATED) FMC ENVIRONMENTAL EQUIPMENT	1/75
FMC (SODA ASH PLANT) GREEN RIVER, WYOMING COAL (1% SULFUR)	NEW	446,000	SODIUM CARBONATE SCRUBBING FMC ENVIRONMENTAL EQUIPMENT	5/76
GENERAL MOTORS CORPORATION ST. LOUIS, MISSOURI COAL (3.2% SULFUR)	RETROFIT	64,000	SODIUM HYDROXIDE SCRUBBING A.D. LITTLE	0/72
GENERAL MOTORS CORPORATION DAYTON, OHIO COAL(0.7% - 2.0% SULFUR)	RETROFIT	36,000	SODIUM HYDROXIDE SCRUBBING ENTOLETER, INC.	9/74

SECTION 5 (CONTINUED)

OPERATIONAL FGD SYSTEMS ON INDUSTRIAL BOILERS

COMPANY/LOCATION/FUEL	NEW/ RETROFIT	UNIT SIZE (SCFM)	PROCESS/VENDOR	START-UP MO/YR
GENERAL MOTORS CORPORATION TONAWANDA, NEW YORK COAL (1.2% SULFUR)	RETROFIT	42,000	SODIUM HYDROXIDE SCRUBBING FMC ENVIRONMENTAL EQUIPMENT	6/75
GENERAL MOTORS CORPORATION PARMA, OHIO COAL (2.5% SULFUR* 7.1% ASH* 13,350 BTU/LB)	RETROFIT	128,400	DOUBLE ALKALI (DILUTE) GM ENVIRONMENTAL	3/74
GENERAL MOTORS CORPORATION PONTIAC, MICHIGAN COAL (0.84% SULFUR) ALSO WOOD, PAPER, AND CARDBOARD.	NEW	107,500	SODIUM HYDROXIDE SCRUBBING PEABODY ENGINEERING	4/76
GEORGIA-PACIFIC PAPER CO. CROSSETT, ARKANSAS BARK AND OIL OR COAL (1% - 1.5% SULFUR)	NEW	220,000	CAUSTIC WASTE STREAM AIRPOL INDUSTRIES	0/75
GETTY OIL COMPANY BAKERSFIELD, CALIFORNIA COAL (1.1% SULFUR)	RETROFIT	72,000	SODIUM CARBONATE SCRUBBING FMC ENVIRONMENTAL EQUIPMENT	6/77
GREAT SOUTHERN PAPER CO. CEDAR SPRINGS, GEORGIA BARK AND COAL OR OIL (1.0%-2.0% SULFUR)	RETROFIT	420,000	CAUSTIC WASTE STREAM AIRPOL INDUSTRIES	0/75
GREAT WESTERN SUGAR BILLINGS, MONTANA COAL (0.7% SULFUR)	RETROFIT	60,000	AMMONIA-LADEN PROCESS WATER GREAT WESTERN SUGAR	10/77
GREAT WESTERN SUGAR FINDLAY, OHIO COAL (1.2% SULFUR, AVERAGE)	RETROFIT	65,230	SODIUM CARBONATE SCRUBBING GREAT WESTERN SUGAR	10/74
GREAT WESTERN SUGAR FORT MORGAN, COLORADO COAL (1.2% SULFUR, AVERAGE)	RETROFIT	65,230	AMMONIA-LADEN PROCESS WATER GREAT WESTERN SUGAR	10/76
GREAT WESTERN SUGAR GERING, NEBRASKA COAL (1.2% SULFUR, AVERAGE)	RETROFIT	110,000	AMMONIA-LADEN PROCESS WATER GREAT WESTERN SUGAR	10/75
GREAT WESTERN SUGAR GREELEY, COLORADO COAL (0.6% SULFUR)	RETROFIT	25,000	AMMONIA-LADEN PROCESS WATER GREAT WESTERN SUGAR	10/75
GREAT WESTERN SUGAR LOVELAND, COLORADO COAL (1.2% SULFUR, AVERAGE)	RETROFIT	121,800	AMMONIA-LADEN PROCESS WATER GREAT WESTERN SUGAR	10/73
GREAT WESTERN SUGAR SCOTTS BLUFF, NEBRASKA COAL (1.2% SULFUR, AVERAGE)	RETROFIT	65,230	AMMONIA-LADEN PROCESS WATER GREAT WESTERN SUGAR	10/75

SECTION 5 (CONTINUED)

OPERATIONAL FGD SYSTEMS ON INDUSTRIAL BOILERS

COMPANY/LOCATION/FUEL	NEW/ RETROFIT	UNIT SIZE (SCFM)	PROCESS/VENDOR	START-UP MO/YR
ITT RAYONIER, INC. FERNANDINA BEACH, FLORIDA BARK AND OIL (2% - 2.5% SULFUR)	RETROFIT	201,000	SODIUM HYDROXIDE SCRUBBING AIRPOL INDUSTRIES	0/75
KERR-MCGEE CHEMICAL CORP. TRONA, CALIFORNIA COKE, COAL, OIL (0.5% - 5% SULFUR)	NEW	726,000	SODIUM CARBONATE SCRUBBING COMBUSTION EQUIPMENT ASSOC.	6/78
MEAD PAPERBOARD CO. STEVENSON, ALABAMA OIL (1.5% - 3% SULFUR)	NEW	100,000	SODIUM HYDROXIDE SCRUBBING AIRPOL INDUSTRIES	0/75
MINN-DAK FARMER'S COOPERATIVE WAHPETON, NORTH DAKOTA LIGNITE (1.0% SULFUR)	RETROFIT	160,000	AMMONIA SCRUBBING KOCH ENGINEERING	6/77
MOBIL OIL COMPANY SAN ARDO, CALIFORNIA OIL (2.0% - 2.25% SULFUR)	RETROFIT	182,000	SODIUM HYDROXIDE SCRUBBING MOBIL OIL COMPANY	0/74
NEKOOSA PAPERS, INC. ASHDOWN, ARKANSAS COAL (1%-1.5% SULFUR)	NEW	211,000	CAUSTIC SCRUBBING AIRPOL INDUSTRIES	2/76
RICKENBACKER AIR FORCE BASE COLUMBUS, OHIO COAL (3.6% SULFUR)	RETROFIT	50,000	LIMESTONE SCRUBBING RESEARCH-COTTRELL/BAHCO	3/76
SHELLER GLOBE CORP. NORFOLK, VIRGINIA COAL (LESS THAN 1% SULFUR)	RETROFIT	8,000	SODIUM HYDROXIDE SCRUBBING W.W. SLY MANUFACTURING CO.	0/75
ST. REGIS PAPER CO. CANTONMENT, FLORIDA BARK AND GAS OR OIL (LESS THAN 1% SULFUR)	RETROFIT	115,000	CAUSTIC SCRUBBING AIRPOL INDUSTRIES	0/73
TEXACO INCORPORATED SAN ARDO, CALIFORNIA OIL (1.7% SULFUR)	RETROFIT	366,000	SODIUM HYDROXIDE SCRUBBING CEILCOTE	11/73
TEXASGULF GRANGER, WYOMING OIL (1.1% SULFUR)	NEW	140,000	SODIUM CARBONATE SCRUBBING SWEMCO INC.	9/76

SECTION 6

UNDER CONSTRUCTION FGD SYSTEMS ON INDUSTRIAL BOILERS

COMPANY/LOCATION/FUEL	NEW/ RETROFIT	UNIT SIZE (SCFM)	PROCESS/VENDOR	START-UP MO/YR
CATERPILLAR TRACTOR CO. MAPLETON, ILLINOIS COAL (3.2% SULFUR)	NEW	157,000	DOUBLE ALKALI (CONCENTRATED) FMC ENVIRONMENTAL EQUIPMENT	10/78
GETTY OIL COMPANY BAKERSFIELD, CALIFORNIA CRUDE OIL (1.1% SULFUR)	RETROFIT	993,750	SODIUM CARBONATE SCRUBBING PROPRIATARY DESIGN	12/78
GREAT WESTERN SUGAR FREEMONT,OHIO COAL (3% SULFUR)	RETROFIT	40,000	SODIUM CARBONATE SCRUBBING GREAT WESTERN SUGAR	10/78
MOBIL OIL COMPANY BUTTONWILLOW, CALIFORNIA OIL (1.1% SULFUR)	RETROFIT	42,000	SODIUM CARBONATE SCRUBBING HEATER TECHNOLOGY	9/78
ST. JOE ZINC CO. MONACA, PENNSYLVANIA COAL (2.5%-4.5% SULFUR)	RETROFIT	104,000	CITRATE PROCESS BUREAU OF MINES	10/78
TEXACO INCORPORATED SAN ARDO, CALIFORNIA OIL (1.7% SULFUR)	RETROFIT	117,000	SODIUM CARBONATE SCRUBBING DUCON COMPANY	3/79

SECTION 7

PLANNED FGD SYSTEMS ON INDUSTRIAL BOILERS

COMPANY/LOCATION/FUEL	NEW/ RETROFIT	UNIT SIZE (SCFM)	PROCESS/VENDOR	START-UP MO/YR
ARCO/POLYMERS, INC. MONACA, PENNSYLVANIA COAL (3.0% SULFUR)	RETROFIT	236,000	DOUBLE ALKALI (CONCENTRATED) FMC ENVIRONMENTAL EQUIPMENT	6/80
CARBORUNDUM ABRASIVES BUFFALO, NEW YORK COAL (2% S AVERAGE, 3.2% S DESIGN MAX)	RETROFIT	38,000	LIME SCRUBBING CARBORUNDUM ENVIR. SYS. LTD.	0/ 0
CHEVRON U.S.A. INC. BAKERSFIELD, CALIFORNIA OIL (1.1% SULFUR)	RETROFIT	146,000	SODIUM CARBONATE SCRUBBING NOT SELECTED	4/79
GRISSOM AIR FORCE BASE BUNKER HILL, INDIANA COAL (0.9% - 4.6% SULFUR)	1 NEW 2 RETROFIT	32,000	DOUBLE ALKALI (CONCENTRATED) NOT SELECTED	9/79
C.A.M.(CARBIDE-AMOCO-MONSANTO) HOUSTON, TEXAS NOT SELECTED	NEW	1,200,000	NOT SELECTED NOT SELECTED	10/83

SECTION 8

SUMMARY OF DISPOSAL PRACTICES FOR FGD SYSTEMS ON INDUSTRIAL BOILERS

INSTALLATION NAME / LOCATION	STATUS/COMMENTS
ALKALINE SULFITE/BISULFITE RECYCLED TO PULP PROCESS	
MEAD PAPERBOARD CO. STEVENSON, ALABAMA	OPERATIONAL RECOVERED SOLUTION USED AS MAKE-UP TO COOKING LIQUOR IN PULP MILL.
NEKOOSA PAPERS, INC. ASHDOWN, ARKANSAS	OPERATIONAL SO2 RECOVERED FROM SODIUM SULFITE/SULFATE LIQUOR AND RE-CYCLED TO PULPING PROCESS.
DEWATERED SLURRY TO LANDFILL	
ARCO/POLYMERS, INC. MONACA, PENNSYLVANIA	PLANNED-CONTRACT AWARDED FLYASH ADDITION TO DEWATERED CASO3/CASO4 FILTER CAKE, THEN TO LANDFILL.
BUNGE, INC. CAIRO, ILLINOIS	TERMINATED
CATERPILLAR TRACTOR CO. EAST PEORIA, ILLINOIS	OPERATIONAL 60+% SOLIDS (CASO4) SLUDGE DIRECTLY TO LANDFILL
CATERPILLAR TRACTOR CO. MOSSVILLE, ILLINOIS	OPERATIONAL 60+% SOLIDS (CASO4) SLUDGE DIRECTLY TO LANDFILL
CATERPILLAR TRACTOR CO. JOLIET, ILLINOIS	OPERATIONAL
CATERPILLAR TRACTOR CO. MORTON, ILLINOIS	OPERATIONAL
CATERPILLAR TRACTOR CO. MAPLETON, ILLINOIS	CONSTRUCTION 60+% SOLIDS (CASO4) SLUDGE DIRECTLY TO LANDFILL
FIRESTONE TIRE AND RUBBER CO. POTTSTOWN, PENNSYLVANIA	OPERATIONAL
GENERAL MOTORS CORPORATION TONOWANDA, NEW YORK	OPERATIONAL FLY ASH AND NA2SO3/SO4 WASTE LIQUOR DEWATERED AND THEN TO SANITARY LANDFILL
GENERAL MOTORS CORPORATION PARMA, OHIO	OPERATIONAL 50 + % SOLIDS (CASO3/SO4) SLUDGE TO DRYING POND AND LANDFILL
GENERAL MOTORS CORPORATION PONTIAC, MICHIGAN	OPERATIONAL 5% SOLIDS SLURRY DEWATERED AND TO LANDFILL
GRISSOM AIR FORCE BASE BUNKER HILL, INDIANA	PLANNED-REQUESTING/EVALUATING BIDS
U.S. GYPSUM CORP. OAKMONT, PENNSYLVANIA	TERMINATED SLUDGE TO POND FOR DRYING. THEN TO LANDFILL.
HOLDING POND FOR EVAPORATION	
AMERICAN THREAD CO. MARION, NORTH CAROLINA	OPERATIONAL THE SODIUM SULFITE/SULFATE WASTE LIQUOR IS PUMPED TO A RED CLAY LINED ASH BASIN. LEACHING OF THE SOLUBLE SODIUM SALTS IS THEREBY PREVENTED.
ARMCO STEEL MIDDLETOWN, OHIO	OPERATIONAL

SECTION 8 (CONTINUED)

SUMMARY OF DISPOSAL PRACTICES FOR FGD SYSTEMS ON INDUSTRIAL BOILERS

INSTALLATION NAME / LOCATION	STATUS/COMMENTS
HOLDING POND FOR EVAPORATION	
FMC (SODA ASH PLANT) GREEN RIVER, WYOMING	OPERATIONAL NA2SO3/SO4 LIQUOR DISPOSED TO COLLECTION POND - NO PRIOR AERATION. LANDFILL IN THE FUTURE
GETTY OIL COMPANY BAKERSFIELD, CALIFORNIA	OPERATIONAL 10 GPM BLEEDOFF TO A BLOWDOWN TANK. THE BLOWDOWN IS THEN SENT TO A DISPOSAL POND ONCE A WEEK.
KERR-MCGEE CHEMICAL CORP. TRONA, CALIFORNIA	OPERATIONAL SCRUBBER EFFLUENT IS CLARIFIED AND THEN PUT INTO A MINERAL DEPOSIT.
MOBIL OIL COMPANY SAN ARDO, CALIFORNIA	OPERATIONAL
MOBIL OIL COMPANY BUTTONWILLOW, CALIFORNIA	CONSTRUCTION INTERMITTENT BLOWDOWN TO WASTE DISPOSAL SITE.
NON-FIXATED SLURRY TO LINED POND	
CANTON TEXTILES CANTON, GEORGIA	OPERATIONAL NA SO3/SO4 LIQUOR DISPOSED TO LINED HOLDING PONDS
RICKENBACKER AIR FORCE BASE COLUMBUS, OHIO	OPERATIONAL UNSTABILIZED CASO3/SO4 SLUDGE TO LINED POND
REGENERABLE - ELEMENTAL SULFUR PRODUCT	
ST. JOE ZINC CO. MONACA, PENNSYLVANIA	CONSTRUCTION
WASTEWATER TREATMENT AND DISCHARGE TO CITY SEWER	
CARBORUNDUM ABRASIVES BUFFALO, NEW YORK	PLANNED-CONTRACT AWARDED
GENERAL MOTORS CORPORATION ST. LOUIS, MISSOURI	OPERATIONAL NA2SO3 OXIDIZED TO NA2SO4, PH NEUTRALIZED AND DISCHARGED TO CITY SEWER SYSTEM
GENERAL MOTORS CORPORATION DAYTON, OHIO	OPERATIONAL NA2SO3/SO4 LIQUOR AT 35 GPM TO ON-SITE CLARIFICATION AND DEWATERING FACILITY
GEORGIA-PACIFIC PAPER CO. CROSSETT, ARKANSAS	OPERATIONAL
GREAT WESTERN SUGAR FINDLAY, OHIO	OPERATIONAL BLEED-OFF STREAM TO HOLDING TANK
GREAT WESTERN SUGAR FREEMONT, OHIO	CONSTRUCTION
QUALITY MILLS, INC. MT. AIRY, NORTH CAROLINA	TERMINATED SCRUBBING LIQUOR DISCHARGED TO NEUTRALIZATION POND

SECTION 8 (CONTINUED)

SUMMARY OF DISPOSAL PRACTICES FOR FGD SYSTEMS ON INDUSTRIAL BOILERS

INSTALLATION NAME / LOCATION	STATUS/COMMENTS
WASTEWATER TREATMENT AND DISCHARGE TO RIVER	
GREAT SOUTHERN PAPER CO. CEDAR SPRINGS, GEORGIA	OPERATIONAL CLARIFICATION FOLLOWED BY PONDING AND DISCHARGE TO RIVER
GREAT WESTERN SUGAR BILLINGS, MONTANA	OPERATIONAL
GREAT WESTERN SUGAR FORT MORGAN, COLORADO	OPERATIONAL
GREAT WESTERN SUGAR GERING, NEBRASKA	OPERATIONAL EFFLUENT TO HOLDING POND
GREAT WESTERN SUGAR GREELEY, COLORADO	OPERATIONAL
GREAT WESTERN SUGAR LOVELAND, COLORADO	OPERATIONAL EFFLUENT STREAM TO HOLDING POND
GREAT WESTERN SUGAR SCOTTS BLUFF, NEBRASKA	OPERATIONAL EFFLUENT STREAM TO HOLDING POND.
GREAT WESTERN SUGAR LONGMONT, COLORADO	TERMINATED
TRANSCO TEXTILES, INC. AUGUSTA, GEORGIA	TERMINATED NA2SO3/SO4 LIQUOR DISCHARGED TO A HOLDING POND
WASTEWATER TREATMENT AND DISCHARGE TO TAILINGS POND	
CHEVRON U.S.A. INC. BAKERSFIELD, CALIFORNIA	OPERATIONAL
GETTY OIL COMPANY BAKERSFIELD, CALIFORNIA	CONSTRUCTION
ITT RAYONIER, INC. FERNANDINA BEACH, FLORIDA	OPERATIONAL
WASTEWATER TREATMENT	
ALYESKA PIPELINE SERVICE CO. VALDEZ, ALASKA	OPERATIONAL NA2SO3/HSO3 AERATED TO NA2SO4 AND TRANSFERRED TO WASTEWATER TREATMENT PLANT AT A RATE OF 10 GPM. IT IS MIXED WITH ABOUT 10,000 GPM OF BALLAST WATER FROM TANKERS IN PORT VALDEZ. CLEANED WATER IS THEN DISCHARGED INTO PORT VALDEZ.
CHEVERON U.S.A. INC. BAKERSFIELD, CALIFORNIA	PLANNED-REQUESTING/EVALUATING BIDS
MINN-DAK FARMER'S COOPERATIVE WAHPETON, NORTH DAKOTA	OPERATIONAL BLEED STREAM GOES TO AN ACTIVATED SLUDGE SYSTEM @ 160 GPM
ST. REGIS PAPER CO. CANTONMENT, FLORIDA	OPERATIONAL EFFLUENT IS TREATED IN AN ON-SITE SEWAGE TREATMENT PLANT
TEXACO INCORPORATED SAN ARDO, CALIFORNIA	OPERATIONAL HALF OF THE SCRUBBER UNDERFLOW IS TREATED AND RECYCLED AS BOILER FEEDWATER; THE OTHER HALF GOES TO WASTEWATER DISPOSAL WELLS.
TEXASGULF GRANGER, WYOMING	OPERATIONAL

SECTION 8 (CONTINUED)

SUMMARY OF DISPOSAL PRACTICES FOR FGD SYSTEMS ON INDUSTRIAL BOILERS

INSTALLATION NAME / LOCATION	STATUS/COMMENTS
OVERFLOW TO SEWER/SLUDGE TO LANDFILL	
SHELLER GLOBE CORP. NORFOLK, VIRGINIA	OPERATIONAL
DISPOSAL TECHNIQUE NOT KNOWN	
C.A.M.(CARBIDE-AMOCO-MONSANTO) HOUSTON, TEXAS	PLANNED-CONSIDERING SO2 CONTROL
HARRIS MINING CO. SPRUCE PINE, NORTH CAROLINA	TERMINATED
SCRUBBER EFFLUENT DISPOSED OF IN WASTE WELLS	
TEXACO INCORPORATED SAN ARDO, CALIFORNIA	CONSTRUCTION

SECTION 9

PERFORMANCE DESCRIPTION FOR OPERATIONAL FGD SYSTEMS ON INDUSTRIAL BOILERS

INSTALLATION NAME	ALYESKA PIPELINE SERVICE CO.
INSTALLATION LOCATION	VALDEZ, ALASKA
SOURCE CHARACTERISTICS	FUEL OIL (0.03% - 0.1% SULFUR)
SOURCE RATING	50,000 SCFM (DESIGN MAXIMUM)
NUMBER OF SEPARATE FGD UNITS	1
SOURCE CAPACITY	25 MW (EQUIVALENT)
CONTROL SYSTEM VENDOR	FMC ENVIRONMENTAL EQUIPMENT
CONTROL PROCESS	SODIUM HYDROXIDE SCRUBBING
NEW / RETROFIT	NEW
START-UP DATE	JUNE, 1977
CONTROL SYSTEM STATUS	OPERATIONAL
SO2 EFFICIENCY	96+% (150-160 PPM @ INLET)
PARTICULATE EFFICIENCY	PARTICULATE EMISSIONS MEET NSPS.
WATER MAKE-UP	10 GPM - OPEN LOOP
SLUDGE OR BY-PRODUCT DISPOSAL	WASTEWATER TREATMENT NA2SO3/HSO3 AERATED TO NA2SO4 AND TRANSFERRED TO WASTEWATER TREATMENT PLANT AT A RATE OF 10 GPM. IT IS MIXED WITH ABOUT 10,000 GPM OF BALLAST WATER FROM TANKERS IN PORT VALDEZ. CLEANED WATER IS THEN DISCHARGED INTO PORT VALDEZ.
CONTROL SYSTEM COST	CAPITAL: PLANT PERSONNEL DO NOT BREAK OUT FGD SYSTEM COSTS FROM OVERALL PIPELINE PROJECT COSTS. OPERATING: PLANT ACCOUNTING DOES NOT KEEP OPERATING COSTS FOR THE INERT GAS (FGD) SYSTEM.

BACKGROUND INFORMATION

AT THE VALDEZ TERMINAL OF THE ALASKAN OIL PIPELINE, ALYESKA PIPELINE SERVICE COMPANY OPERATES THE OIL STORAGE AND TRANSFER FACILITY. OIL FLOWING IN FROM THE PIPELINE IS TEMPORARILY STORED IN SEVERAL HUGE TANKS, THEN TRANSFERRED FROM THE TANKS TO OIL TANKER SHIPS IN NEARBY PORT VALDEZ. ALYESKA NEEDED NEUTRAL BLANKET AIR FOR THE OIL STORAGE TANKS, A LOW OXYGEN CONTENT BEING PARTICULARLY DESIRABLE. IT WAS DETERMINED THAT ON-SITE BOILER FLUE GAS WOULD HAVE THE REQUIRED LOW OXYGEN CONTENT. CORROSION PREVENTION IN THE OIL STORAGE TANKS DICTATED THE NEED FOR SO2 CONTROLS. THAT IS, THE DEVICE WAS NOT INSTALLED TO MEET AN EMISSIONS REGULATION. NEVERTHELESS, THE "INERT GAS" SYSTEM IS BASICALLY A SODIUM HYDROXIDE FGD SYSTEM AND WAS DESIGNED AND INSTALLED BY FMC ENVIRONMENTAL EQUIPMENT DIVISION.

THE BOILERS DO NOT OPERATE AT STEADY STATE CONDITIONS. THIS IS DUE TO THE FACT THAT WHEN OIL IS REMOVED FROM THE TANKS AT A FASTER RATE THAN IT IS BEING FED BY THE PIPELINE, AN ADDITIONAL INERT

SECTION 9 (CONTINUED)

PERFORMANCE DESCRIPTION FOR OPERATIONAL FGD SYSTEMS ON INDUSTRIAL BOILERS

ALYESKA PIPELINE SERVICE CO.; VALDEZ, ALASKA (CONTINUED)

AIR BLANKET IS NEEDED. THIS REQUIRES INCREASING THE BOILER LOAD FROM THE NORMAL LEVEL OF PLANT POWER PRODUCTION TO RUN THE COMPRESSORS AND PRODUCE ADDITIONAL GAS FOR BLANKET PRODUCTION. IF THE TANKS ARE FILLING FASTER THAN THEY ARE BEING EMPTIED, THE AIR FORCED OUT BY THE INCOMING OIL WILL BE INCINERATED.

THE BOILER PLANT AT THE VALDEZ TERMINAL CONSISTS OF THREE 250 MM BTU/HR OIL-FIRED BOILERS, MANUFACTURED BY COMBUSTION-ENGINEERING. THE OIL BEING USED IN THE BOILERS PRODUCES A VERY LOW PARTICULATE GRAIN LOADING, AND HAS AN EXTREMELY LOW SULFUR CONTENT WHICH RANGES FROM 0.03% TO 0.1%. THERE IS NO PARTICULATE CONTROL OTHER THAN WHAT OCCURS IN THE FMC SO2 ABSORBER MODULE.

THE MAXIMUM DESIGN CAPACITY OF THE SCRUBBER MODULE IS 50,000 SCFM, WHICH REPRESENTS ABOUT 25% OF THE TOTAL FLUE GAS GENERATED. THE SO2 CONTROL SYSTEM IS DESIGNED WITH 100% REDUNDANCY, I.E., THERE ARE TWO MODULES IN PARALLEL, ONLY ONE OF WHICH IS IN USE AT ANYTIME.

CAUSTIC (SODIUM HYDROXIDE) IS USED AS REAGENT MAKE-UP. DESIGN PH CONTROL WAS ABOUT 6.5, BUT OPERATIONS HAVE INDICATED THAT A HIGHER PH IS MORE DESIRABLE, SO CONTROL PH IS NOW ABOUT 8.0. A BLEED STREAM OF SODIUM BISULFITE/SULFITE GOES TO AN AERATOR AT A RATE OF 10 GPM. AFTER COMPLETE OXIDATION TO NA2SO4, THE WASTE STREAM GOES TO A WASTEWATER TREATMENT AREA WHERE IT IS MIXED WITH 10,000 GPM OF BALLAST WATER FROM THE TANKERS IN THE PORT, AND DISCHARGED INTO THE PORT.

OPERATING HISTORY

3RD QUARTER-1977 CORROSION HAS OCCURRED IN THE PIPING FOR THE WATER RECIRCULATION SYSTEM. AT THE TIME OF THIS REPORT, THE CAUSE WAS NOT KNOWN. ALYESKA TESTS HAVE DEMONSTRATED ABOUT 5 PPM SO2/SO3/SO4 AT THE ABSORBER OUTLET. INLET SO2 CONCENTRATION RANGES FROM 150 TO 160 PPM. THE SYSTEM WAS THEREFORE REMOVING ABOUT 96% OF THE INLET SULFUR OXIDES. AT THE TIME OF THIS REPORT, THERE WAS NO CONTINUOUS SO2 MONITOR ON THE SYSTEM.

4TH QUARTER-1977 THE CONTROL SYSTEM OPERATED NEARLY PROBLEM-FREE, WITH NO DOWNTIME BEING ASSIGNED TO THE SO2 REMOVAL SYSTEM. THE CURRENT LOAD IS APPROXIMATELY 20% OF DESIGN CAPACITY. THIS IS A RESULT OF OIL FLOW BEING LOW AT PRESENT. PLANS WERE BEING MADE TO DEAL WITH THE WET AREAS CORROSION PROBLEM BY INTRODUCING NEUTRALIZING AMINE SPRAYS.

1ST QUARTER-1978 DURING THIS PERIOD, THE CORROSION PROBLEM WAS ALLEVIATED BY SPRAYING HYDRAZINE INTO THE SYSTEM UPSTREAM OF THE MIST ELIMINATOR. THIS MEASURE RAISED FROM 4 TO 6.5 THE PH OF THE LIQUOR RECOVERED BY THE MIST ELIMINATOR. CYCLOHEXAMINE MAY BE TESTED IN PLACE OF THE HYDRAZINE. THE PLANT WAS NOT YET AWARE OF THE CAUSE OF THE CORROSION, ALTHOUGH THEY SUSPECTED CARBON, SULFUR, AND NITROGEN ACID GASES. CHLORIDES HAVE VIRTUALLY BEEN RULED OUT AS THE SOURCE OF THE CORROSION.

2ND QUARTER-1978 THE FMC FGD SYSTEM CONTINUED TO OPERATE ON A CONTINUOUS BASIS, BEING RESPONSIBLE FOR NO DOWNTIME. ANY MAINTENANCE OPERATIONS WERE EFFECTED WHILE THE SYSTEM WAS OPERATING.

SECTION 9 (CONTINUED)

PERFORMANCE DESCRIPTION FOR OPERATIONAL FGD SYSTEMS ON INDUSTRIAL BOILERS

INSTALLATION NAME	AMERICAN THREAD CO.
INSTALLATION LOCATION	MARION, NORTH CAROLINA
SOURCE CHARACTERISTICS	COAL (0.8% SULFUR); INTERRUPTIBLE NATURAL GAS
SOURCE RATING	18,500 SCFM (TOTAL - 2 BOILERS)
NUMBER OF SEPARATE FGD UNITS	2
SOURCE CAPACITY	18 MW (EQUIVALENT); TOTAL - 2 BOILERS
CONTROL SYSTEM VENDOR	W.W. SLY MANUFACTURING CO.
CONTROL PROCESS	CAUSTIC-WASTE STREAM
NEW / RETROFIT	RETROFIT
START-UP DATE	1973
CONTROL SYSTEM STATUS	OPERATIONAL
SO2 EFFICIENCY	70% (500 PPM @ INLET)
PARTICULATE EFFICIENCY	97%
SLUDGE OR BY-PRODUCT DISPOSAL	HOLDING POND FOR EVAPORATION THE SODIUM SULFITE/SULFATE WASTE LIQUOR IS PUMPED TO A RED CLAY LINED ASH BASIN. LEACHING OF THE SOLUBLE SODIUM SALTS IS THEREBY PREVENTED.
CONTROL SYSTEM COST	CAPITAL: $138,000 (1972). THIS IS TOTAL INSTALLED COST. OPERATING: $16,300/YR (1977). THIS FIGURE INCLUDES NEW FIBERGLASS LININGS IN DUCTWORK AND ON FANS AND OTHER OPERATING LABOR AND MATERIALS.

OPERATING HISTORY

PLANT REPORTS THAT IT IS STILL EXPERIENCING SCRUBBER I.D. FAN PROBLEMS DUE TO VIBRATION AND CORROSION. TO OVERCOME THIS PROBLEM, PLANS ARE BEING MADE TO ELIMINATE THE I.D. FANS ON THE SCRUBBER AND UPGRADE BOILER ID FANS.

OTHER PROBLEMS HAVE BEEN AS FOLLOWS:

1. VIBRATION CRACKS IN PVC PIPING.
2. FAILURE OF PUMP RUBBER LINING.
3. THE NEED TO DRAIN THE RECIRCULATION TANK AND PAINT IT WITH EPOXY PAINT TO ALLEVIATE CORROSION PROBLEMS.

SECTION 9 (CONTINUED)

PERFORMANCE DESCRIPTION FOR OPERATIONAL FGD SYSTEMS ON INDUSTRIAL BOILERS

INSTALLATION NAME	ARMCO STEEL
INSTALLATION LOCATION	MIDDLETOWN, OHIO
SOURCE CHARACTERISTICS	COAL (0.6% SULFUR)
SOURCE RATING	84,000 SCFM (TOTAL - 2 BOILERS)
	200,000 LB/HR STEAM (TOTAL)
NUMBER OF SEPARATE FGD UNITS	1
CONTROL SYSTEM VENDOR	KOCH ENGINEERING
CONTROL PROCESS	LIME SCRUBBING
NEW / RETROFIT	RETROFIT
START-UP DATE	1975
CONTROL SYSTEM STATUS	OPERATIONAL
SO2 EFFICIENCY	NOT AVAILABLE
SLUDGE OR BY-PRODUCT DISPOSAL	HOLDING POND FOR EVAPORATION

BACKGROUND INFORMATION

THE SCRUBBER UNIT SERVES TWO MULTI-RETORT, UNDERFEED STOKER, COAL-FIRED BOILERS, EACH WITH A CAPACITY OF 100,000 LBS/HR STEAM. THE COAL BURNED IS TYPICALLY 0.7 TO 0.9 PERCENT SULFUR AND 8% TO 10% ASH. NORMALLY THE BOILERS ARE OPERATED IN THE WINTER MONTHS ONLY, HOWEVER FOR THE PAST TWO YEARS, OPERATIONS HAVE BEEN YEAR-ROUND WITH REDUCED CAPACITY DURING THE SUMMER. THE CONTROL SYSTEM CONSISTS OF A VARIABLE-THROAT VENTURI SCRUBBER WITH A PRESSURE DROP CONTROLLED ADJUSTABLE PLUG. IMMEDIATELY DOWNSTREAM FROM THE VENTURI IS AN ABSORBER MODULE 17 FEET IN DIAMETER WITH THREE GAS SCRUBBING TRAYS, A S-TYPE CHEVRON MIST ELIMINATOR AND A 106-INCH DIAMETER STUB STACK. THE SYSTEM IS DESIGNED TO HANDLE 140,000 ACFM AT 425 F AND 15 INCHES WG WITH AN OUTLET LOADING OF 0.02 GR PER SCFD. FRESH WATER IS SUPPLIED FROM CLARIFIED RIVER WATER AT THE RATE OF 1600 GPM TO THE TOP TRAY AND VENTURI THROAT. A LIME SLURRY IS ADDED IN A 10,000 GALLON RECYCLE TANK WHICH HOLDS EFFLUENT FROM THE ABSORBER MODULE.

THE LARGEST PROBLEM AFFECTING SCRUBBER PERFORMANCE HAS BEEN CONTROL OF EXCESS AIR IN THE BOILERS. WITHOUT CONTROL, EXCESS AIR RESULTS IN 1.5 TO 3 TIMES THE SCRUBBER DESIGN FLOW RATE. THESE HIGH EXCESS AIR RATES ALSO RESULT IN THE PRESENCE OF UNBURNED CARBON WHICH COULD NOT BE SCRUBBED AND COMPOUNDED POOR PERFORMANCE. PROBLEMS WERE ALSO ENCOUNTERED WITH THE CHEVRON MIST ELIMINATOR WHICH IS MADE OF NOREL PLASTIC. IT WAS RATED AT 225 F WHICH WAS WELL ABOVE THE TEMPERATURE AT THAT LOCATION IN THE SYSTEM. HOWEVER, OVERLOOKED WAS THE FACT THAT NOREL IS CREEP SENSITIVE AT 20 DEGREES F ABOVE AMBIENT AND THE CHEVRONS FAILED WITHIN A FEW MONTHS. NEW CHEVRONS OF THE SAME MATERIAL ARE ALSO BEING DAMAGED. STAINLESS STEEL OR FIBERGLASS REINFORCED PLASTIC IS THE PREFERRED MATERIAL FOR THIS APPLICATION.

THE WATER SYSTEM WAS ORIGINALLY DESIGNED TO BE A RECIRCULATING SYSTEM. THE RECIRCULATED WATER HAD A SUSPENDED SOLIDS CONCENTRATION OF 40000-50000 MILLIGRAMS PER LITER AT THE VENTURI. ALL THE

SECTION 9 (CONTINUED)

PERFORMANCE DESCRIPTION FOR OPERATIONAL FGD SYSTEMS ON INDUSTRIAL BOILERS

ARMCO STEEL; MIDDLETOWN, OHIO (CONTINUED)

PIPING IN THIS SYSTEM WAS MILD STEEL AND WAS SEVERLY ABRADED CAUSING NUMEROUS LEAKS.

THE SYSTEM HAS BEEN MODIFIED TO A ONCE-THROUGH OPERATION AND THE ABRASION HAS CEASED. SERIOUS ABRASION PROBLEMS WERE ALSO ENCOUNTERED IN 12-INCH STEEL PIPING CARRYING DIRTY WATER FROM THE TRAYS TO THE RECYCLE TANK AS WELL AS IN THE PUMPS. THE PROBLEM WAS SOLVED BY REPLACING THE PIPING WITH RUBBER HOSE, RUBBER LINED ELBOWS, AND RUBBER LINED PUMPS. IN ADDITION, PUMP SPEED WAS REDUCED FROM 1780 TO 1180 RPM AND FLANGED T-SECTIONS WERE INSTALLED ON THE SUCTION SIDE OF THE SLUDGE PUMPS AND RECIRCULATION PUMPS. THIS MATERIAL HAS WITHSTOOD ABRASION BETTER THAN ANY OTHER MATERIAL TRIED TO DATE.

A LIME BUILD UP PROBLEM WAS EXPECTED ON THE ABSORBER TRAYS AT LOW GAS FLOW RATES. THIS PROBLEM HAS NOT YET OCCURRED AT SUSTAINED PH LEVELS OF 6-6.5.

THE LIME SLURRY SYSTEM HAS ALSO PRESENTED A PROBLEM. CLOGGING OF THE LIME SLURRY LINE IS ATTRIBUTED TO ITS EXCESSIVE LENGTH. LIME ADDITION RATE IS A PROBLEM WHICH CAN BE RESOLVED WITH THE INSTALLATION OF A PROPORTIONAL LIME SLAKER.

OPERATING HISTORY

4TH QUARTER-1977 THE PLANT WAS NOT ABLE TO SUPPLY EXTENSIVE UPDATE INFORMATION FOR THIS REPORT PERIOD, ALTHOUGH REPORTED THAT RECENT OPERATIONS HAVE BEEN RELATIVELY PROBLEM-FREE. THE SCRUBBER WAS DOWN IN FEBRUARY 1978 AS A RESULT OF THE POWER SHORTAGE OHIO IS EXPERIENCING. PLANT HAS INDICATED THAT IT WILL SUPPLY MORE DETAILED INFORMATION FOR THE NEXT REPORT PERIOD.

2ND QUARTER-1978 NO INFORMATION WAS OBTAINED FOR THIS UPDATE.

SECTION 9 (CONTINUED)

PERFORMANCE DESCRIPTION FOR OPERATIONAL FGD SYSTEMS ON INDUSTRIAL BOILERS

INSTALLATION NAME	CANTON TEXTILES
INSTALLATION LOCATION	CANTON, GEORGIA
SOURCE CHARACTERISTICS	COAL (0.8% SULFUR); INTERRUPTIBLE NATURAL GAS
SOURCE RATING	25,000 SCFM (1 BOILER)
NUMBER OF SEPARATE FGD UNITS	1
SOURCE CAPACITY	10 MW (EQUIVALENT)
CONTROL SYSTEM VENDOR	FMC ENVIRONMENTAL EQUIPMENT
CONTROL PROCESS	CAUSTIC- WASTE STREAM
NEW / RETROFIT	RETROFIT
START-UP DATE	JUNE, 1974
CONTROL SYSTEM STATUS	OPERATIONAL
SO2 EFFICIENCY	70% (500 PPM @ INLET)
PARTICULATE EFFICIENCY	80% - 90% (5.92 LB/MM BTU AT INLET)
WATER MAKE-UP	OPEN LOOP
SLUDGE OR BY-PRODUCT DISPOSAL	NON-FIXATED SLURRY TO LINED POND
	NA SO3/SO4 LIQUOR DISPOSED TO LINED HOLDING PONDS
CONTROL SYSTEM COST	CAPITAL COST IS FOR AN INSTALLED SYSTEM.

BACKGROUND INFORMATION

CANTON TEXTILE MILLS IN CANTON, GEORGIA HAS A 10 MW (EQUIVALENT) STEAM BOILER WHICH FIRES COAL FROM OCT. TO MAY AND INERUPTABLE NATURAL GAS THE REMAINDER OF THE YEAR. THE BOILER IS A COMBUSTION ENGINEERING (C-E) VERTICAL UNIT EQUIPPED WITH A CYCLONIC DUST COLLECTOR. THE DUST COLLECTOR CAPTURES APPROXIMATELY 75 TO 100 POUNDS OF FLY ASH PER HOUR. THE TYPICAL COAL BURNED HAS A SULFUR CONTENT OF 0.8 PERCENT AND AS RECEIVED HEAT VALUE OF 13,600 BTU PER POUND COAL. SULFUR DIOXIDE CONCENTRATION IN FLUE GAS IS 1500 PPM WITH A PARTICULATE LOADING OF 5.92 LB/MM BTU.

THE FGD SYSTEM CONSISTS OF A FMC MEDIUM ENERGY, VENTURI-TYPE SCRUBBER. CAUSTIC DYEING WATER WASTE CONTAINING SODIUM HYDROXIDE AND SODIUM SULFATE WITH A PH OF APPROXIMATELY 11 TO 12 IS THE SCRUBBING LIQUOR. THE SCRUBBING LIQUID IS INJECTED INTO THE FLUE GAS STREAM THROUGH SPRAY NOZZLES AHEAD OF THE VENTURI THROAT. THE WASTEWATER IS COLLECTED IN AN EQUALIZATION BASIN. DEPENDING ON THE DESIRED DEGREE OF NEUTRALIZATION, THE WASTEWATER IS THEN RECYCLED TO THE SCRUBBER OR PUMPED TO THE WASTEWATER TREATMENT FACILITY.

SEVERAL OPERATIONAL PROBLEMS WERE ENCOUNTERED UPON INITIAL STARTUP. A SEVERE PLUGGING PROBLEM WAS ENCOUNTERED IN SEVERAL PUMPS DUE TO THE PRESENCE OF COTTON FIBERS IN THE WASTEWATER. A SCREEN BASKET AROUND THE INITIAL SCRUBBER SYSTEM INTAKE PIPE IN THE DYE COLLECTION MANHOLE IS BEING USED TEMPORARILY UNTIL FURTHER INVESTIGATION IS COMPLETED. SURFACE-ACTIVE AGENTS IN THE DYEING WASTE-WATERS WHICH PRODUCE FOAMING IN THE SCRUBBER PUMP WERE DETECTED AND A DEFOAMER ADDITIVE IS NOW INJECTED INTO THE SCRUBBER FEED FROM THE DYE RETENTION BASIN. FOULING OF THE PH PROBES AND SULFUR

SECTION 9 (CONTINUED)

PERFORMANCE DESCRIPTION FOR OPERATIONAL FGD SYSTEMS ON INDUSTRIAL BOILERS

CANTON TEXTILES; CANTON, GEORGIA (CONTINUED)

AND MIST GENERATION ARE OTHER PROBLEM AREAS THAT HAVE BEEN INVESTIGATED.

OPERATING HISTORY

3RD QUARTER-1977 NO OPERATIONAL PROBLEMS WERE REPORTED DURING THIS SURVEY PERIOD. THE PLANT REPORTS THE SYSTEM IS WORKING SATISFACTORILY. THE PLANT HAS BEEN BURNING NATURAL GAS BUT EXPECTS TO RETURN TO COAL DURING THE HEATING SEASON (DECEMBER-MAY).

4TH QUARTER-1977 THE PLANT STARTED BURNING COAL AND OPERATING SCRUBBER 100 PERCENT OF THE TIME IN MID-OCTOBER. NO OPERATIONAL PROBLEMS HAVE BEEN ENCOUNTERED DURING THIS PERIOD.

1ST QUARTER-1978 THE SCRUBBER DEMONSTRATED AN OPERABILITY OF 100%.

2ND QUARTER-1978 THE SCRUBBER WAS SHUTDOWN IN MID-MAY WHEN GAS FIRING RESUMED FOR SUMMER. COAL-FIRING WILL RESUME IN MID-OCT. DURING COAL-FIRED OPERATIONS IN 1977 AND 1978, THE SCRUBBER RAN AT A 100% OPERABILITY.

SECTION 9 (CONTINUED)

PERFORMANCE DESCRIPTION FOR OPERATIONAL FGD SYSTEMS ON INDUSTRIAL BOILERS

INSTALLATION NAME	CATERPILLAR TRACTOR CO.
INSTALLATION LOCATION	EAST PEORIA, ILLINOIS
SOURCE CHARACTERISTICS	COAL (3.2% SULFUR)
SOURCE RATING	210,000 SCFM (TOTAL - 4 BOILERS)
	80,000 ACFM @ 350 F, FOR EACH OF 4 FGD SYSTEMS
NUMBER OF SEPARATE FGD UNITS	4
SOURCE CAPACITY	100 MW (EQUIVALENT); TOTAL - 4 BOILERS
CONTROL SYSTEM VENDOR	FMC ENVIRONMENTAL EQUIPMENT
CONTROL PROCESS	DOUBLE ALKALI (CONCENTRATED)
NEW / RETROFIT	2 NEW,2 RETROFIT
START-UP DATE	APRIL, 1976
CONTROL SYSTEM STATUS	OPERATIONAL
SO2 EFFICIENCY	90% (2,000 PPM @ INLET)
SLUDGE OR BY-PRODUCT DISPOSAL	DEWATERED SLURRY TO LANDFILL
	60+% SOLIDS (CASO4) SLUDGE DIRECTLY TO LANDFILL

BACKGROUND INFORMATION

THE CATERPILLAR TRACTOR COMPANY PLANT LOCATED IN EAST PEORIA, ILLINOIS HAS FOUR COAL-FIRED BOILERS. TWO OF THE BOILERS ARE RATED AT 200,000 POUNDS OF STEAM PER HOUR AND THE REMAINING TWO ARE RATED AT 210,000 POUNDS OF STEAM PER HOUR. THE TOTAL BOILER CAPACITY IS ABOUT 100 MW (EQUIVALENT). MECHANICAL COLLECTORS ARE USED FOR PRIMARY PARTICULATE CONTROL.

THE AIR QUALITY CONTROL SYSTEMS HAVE BEEN SUPPLIED BY FMC ENVIRONMENTAL EQUIPMENT DIVISION. THERE IS ONE SCRUBBER TRAIN FOR EACH OF THE FOUR BOILERS, WHICH CONTROLS BOTH PARTICULATE AND SO2 EMISSIONS FROM ABOUT 90,000 ACFM @ 425 F. THE FOUR FGD SYSTEMS SHARE COMMON REGENERATION FACILITIES, VACUUM FILTERS, AND SLUDGE DOSPOSAL.

OPERATING HISTORY

4TH QUARTER-1977 START-UP WAS SCHEDULED FOR MARCH 1978 AND CONSTRUCTION WAS PROGRESSING SMOOTHLY.

1ST QUARTER-1978 CONSTRUCTION OF THE FOUR FGD SYSTEMS WAS COMPLETED. START-UP WAS DELAYED DUE TO THE COAL SHORTAGE.

2ND QUARTER-1978 DURING THIS REPORT PERIOD START-UP OCCURRED. BECAUSE THE BOILER PLANT WAS NEAR THE END OF THE HEATING SEASON, THE BOILER LOADS WERE IN THE 70,000-100,000 LB/HR STEAM RANGE. DURING COLD WEATHER OPERATIONS, THE BOILER LOADS ARE APPROXIMATELY 800,000 LB/HR. THE SYSTEM WAS BUILDING GOOD FILTER CAKE DURING THE START-UP PHASE OF OPERATIONS. FINAL STEADY STATE OPERATIONS WERE NOT ACHIEVED BEFORE SUMMER SHUTDOWN.

SECTION 9 (CONTINUED)

PERFORMANCE DESCRIPTION FOR OPERATIONAL FGD SYSTEMS ON INDUSTRIAL BOILERS

INSTALLATION NAME	CATERPILLAR TRACTOR CO.
INSTALLATION LOCATION	JOLIET, ILLINOIS
SOURCE CHARACTERISTICS	COAL (3.2% SULFUR)
SOURCE RATING	67,000 SCFM (TOTAL - 2 BOILERS)
NUMBER OF SEPARATE FGD UNITS	2
SOURCE CAPACITY	30 MW (EQUIVALENT); TOTAL - 2 BOILERS
CONTROL SYSTEM VENDOR	ZURN INDUSTRIES
CONTROL PROCESS	DOUBLE ALKALI (DILUTE)
NEW / RETROFIT	RETROFIT
START-UP DATE	SEPTEMBER, 1974
CONTROL SYSTEM STATUS	OPERATIONAL
SO2 EFFICIENCY	90+% (2000 PPM @ INLET)
PARTICULATE EFFICIENCY	NOT AVAILABLE
WATER MAKE-UP	CLOSED LOOP; 0.5 GPM
SLUDGE OR BY-PRODUCT DISPOSAL	DEWATERED SLURRY TO LANDFILL

BACKGROUND INFORMATION

THE JOLIET PLANT OPERATES TWO COAL-FIRED BOILERS RATED AT 100,000 AND 60,000 POUNDS OF STEAM PER HOUR. THESE BOILERS ARE ON-LINE ONLY DURING WINTER MONTHS.

THE FGD SYSTEM ON EACH BOILER IS A ZURN DOUBLE ALKALI SCRUBBER CONSTRUCTED OF 316L STAINLESS STEEL. EACH SCRUBBER EXHAUSTS THROUGH A CARBON STEEL STACK. THE TOTAL FLUE GAS FLOW RATE IS 103,500 ACFM @ 350 F. THE SCRUBBER UNITS ARE PRECEDED BY MECHANICAL COLLECTORS FOR PARTICULATE REMOVAL.

THE ZURN SCRUBBER UTILIZES A DUSTRAXTOR MODULE FOR BOTH PARTICULATE AND SO2 CONTROL. SPENT SCRUBBING LIQUOR IS PUMPED TO THE REGENERATION AREA WHERE LIME IS ADDED TO PRODUCE CALCIUM SULFITE/SULFATE IN CLARIFIERS. CLARIFIER UNDERFLOW IS DEWATERED BY VACUUM FILTERS AND THE SLUDGE PRODUCED IS READY FOR DISPOSAL AT A LANDFILL. CLARIFIER OVERFLOW IS RETURNED TO THE SCRUBBER AS REGENERATED SCRUBBING LIQUOR. SODA ASH IS ALSO ADDED TO THE REGENERATED LIQUOR TO REPLENISH SODIUM LOST IN THE SLUDGE. LIME AND SODA ASH ARE STORED IN OUTSIDE SILOS AND CONVEYED TO PROCESS USE POINTS PNEUMATICALLY. A CHEMICAL TREATMENT BUILDING WAS ERECTED TO HOUSE REGENERATION AND SLUDGE HANDLING EQUIPMENT.

OPERATING HISTORY

3RD QUARTER-1977 PROBLEMS OCCURRED WHEN A TANK RAN DRY AND DAMAGED A PUMP. SOME PIPE PLUGGING PROBLEMS ALSO OCCURRED AS A RESULT OF THE PUMP FAILURE. A MAJOR PROBLEM AREA HAS BEEN THE HEAVY WEAR OF THE FILTER CLOTHS ON THE VACUUM FILTERS. THE FILTER CLOTH LASTS ONLY 2 TO 3 WEEKS. NO SOLUTIONS HAVE BEEN FOUND BUT FILTER DESIGN MODIFICATIONS ARE BEING CONSIDERED.

SECTION 9 (CONTINUED)

PERFORMANCE DESCRIPTION FOR OPERATIONAL FGD SYSTEMS ON INDUSTRIAL BOILERS

CATERPILLAR TRACTOR CO.; JOLIET, ILLINOIS (CONTINUED)

THE UNITS WERE ULTRASONICALLY TESTED AND RESULTS SHOW THAT THE SYSTEMS ARE ON THE HIGH SIDE OF TOLERANCE LEVELS. A MINOR LEAK WAS DETECTED AS A RESULT OF A FAULTY WELD.

4TH QUARTER-1977 FGD SYSTEM RESTART OCCURRED AT THE BEGINNING OF THE HEATING SEASON. PLANT HAD INITIATED A PROCESS OF DETAILED RECORD KEEPING BUT WAS STILL WORKING ON THE INTERNAL INFORMATION TRANSFER PROCESS. PLANT HAS INDICATED THAT A SUMMARY OF THESE RECORDS WILL BE AVAILABLE TO THIS REPORT IN THE NEAR FUTURE.

1ST QUARTER-1978 FILTER CLOTH PROBLEMS CONTINUED WITH REPLACEMENT BEING REQUIRED EVERY 2-3 WEEKS. THE SYSTEMS WERE DOWN IN MARCH BECAUSE OF PLUGGED PIPELINES.

2ND QUARTER-1978 UNRELIABLE SO2 MONITORS WERE A PROBLEM DURING THIS PERIOD. HEAVY ATTRITION OF FILTER CLOTHS CONTINUED.

SECTION 9 (CONTINUED)

PERFORMANCE DESCRIPTION FOR OPERATIONAL FGD SYSTEMS ON INDUSTRIAL BOILERS

INSTALLATION NAME	CATERPILLAR TRACTOR CO.
INSTALLATION LOCATION	MORTON, ILLINOIS
SOURCE CHARACTERISTICS	COAL (3.2% SULFUR)
SOURCE RATING	40,000 SCFM (TOTAL -2 BOILERS)
NUMBER OF SEPARATE FGD UNITS	2
SOURCE CAPACITY	20 MW (EQUIVALENT); TOTAL - 2 BOILERS
CONTROL SYSTEM VENDOR	ZURN INDUSTRIES
CONTROL PROCESS	DOUBLE ALKALI (DILUTE)
NEW / RETROFIT	RETROFIT
START-UP DATE	JANUARY, 1978
CONTROL SYSTEM STATUS	OPERATIONAL
SO2 EFFICIENCY	90% (2000 PPM @ INLET)
SLUDGE OR BY-PRODUCT DISPOSAL	DEWATERED SLURRY TO LANDFILL

BACKGROUND INFORMATION

AT THE MORTON PLANT, A PARTS DISTRIBUTION CENTER, CATERPILLAR TRACTOR OPERATES A TWO-BOILER STEAM PLANT WHICH GENERATES FLUE GAS EQUIVALENT TO ABOUT 20 MW. EMISSIONS ARE CONTROLLED BY A ZURN INDUSTRIES AIR QUALITY CONTROL SYSTEM CONSISTING OF A DUSTRAXTOR SCRUBBER IN WHICH PARTICULATE AND SO2 REMOVAL OCCUR SIMULTANEOUSLY. SULFUR DIOXIDE REMOVAL IS BROUGHT ABOUT BY THE USE OF ZURN DILUTE MODE, DOUBLE ALKALI FGD TECHNOLOGY. THE TWO BOILERS AND THE TWO SCRUBBING TRAINS AND MOST ANCILLARY EQUIPMENT ARE WITHIN THE BOILER HOUSE.

THE SYSTEM AT MORTON IS VERY SIMILAR TO THAT AT THE CATERPILLAR JOLIET PLANT, WHICH HAS BEEN OPERATING EACH HEATING SEASON SINCE OCTOBER 1974. WHENEVER POSSIBLE, PROBLEM AREAS AND SOLUTIONS IDENTIFIED IN JOLIET OPERATIONS HAVE BEEN IMPLEMENTED TO IMPROVE THE SYSTEM DESIGN AT MORTON. SPECIFIC AREAS IN WHICH MODIFICATIONS TO DESIGN HAVE BEEN MADE ARE WATER BALANCE, PUMPS, PH MONITORING, PIPING, LIME STORAGE, AND COLD WEATHER PROTECTION.

OPERATING HISTORY

1ST QUARTER-1978 SYSTEM START-UP OCCURRED AT THE BEGINNING OF JANUARY. INITIAL OPERATIONS WERE PROBLEM-FREE. THROUGH JANUARY AND PART OF FEBRUARY, ZURN PERSONNEL WERE TRAINING THE BOILER PLANT PERSONNEL IN THE OPERATION OF THE FGD SYSTEM. OPERATIONAL EXPERIENCES AT JOLIET AND MOSSVILLE HAVE SHOWN THAT THE BOILER OPERATORS CAN BE EFFECTIVELY TRAINED TO OPERATE AND MAINTAIN THE FGD SYSTEMS. CURRENT PLANS CALLED FOR ACCEPTANCE TESTING IN THE SPRING, BUT THE COAL SITUATION MAY DELAY THE TEST PERIOD.

2ND QUARTER-1978 FGD OPERATIONS CONTINUED TO BE TROUBLE-FREE. THE BOILER WAS EXPERIENCING SOME PUFFING (BACK PRESSURE), THE CAUSE OF WHICH WAS NOT KNOWN.

SECTION 9 (CONTINUED)

PERFORMANCE DESCRIPTION FOR OPERATIONAL FGD SYSTEMS ON INDUSTRIAL BOILERS

INSTALLATION NAME	CATERPILLAR TRACTOR CO.
INSTALLATION LOCATION	MOSSVILLE, ILLINOIS
SOURCE CHARACTERISITCS	COAL (3.2% SULFUR)
SOURCE RATING	140,000 SCFM (TOTAL - 4 BOILERS)
NUMBER OF SEPARATE FGD UNITS	4
SOURCE CAPACITY	70 MW (EQUIVILENT); TOTAL - 4 BOILER
CONTROL SYSTEM VENDOR	FMC ENVIRONMENTAL EQUIPMENT
CONTROL PROCESS	DOUBLE ALKALI (CONCENTRATED)
NEW / RETROFIT	1 NEW 1 RETROFIT
START-UP DATE	OCTOBER, 1975
CONTROL SYSTEM STATUS	OPERATIONAL
SO2 EFFICIENCY	90+% (2000 PPM @ INLET)
SLUDGE OR BY-PRODUCT DISPOSAL	DEWATERED SLURRY TO LANDFILL
	60+% SOLIDS (CASO4) SLUDGE DIRECTLY TO LANDFILL

BACKGROUND INFORMATION

AT THE MOSSVILLE PLANT, CATERPILLAR TRACTOR OPERATES A FOUR-BOILER STEAM PLANT. TWO OF THE BOILERS ARE RATED AT 150,000 LBS/HR STEAM AND TWO ARE RATED AT 80,000 LBS/HR STEAM. THE ENTIRE 4-UNIT PLANT IS ROUGHLY EQUIVALENT TO 50 MW OF ELECTRICAL GENERATING POWER. THE COAL FIRED IS HIGH-SULFUR (3.2%-4.0%) ILLINOIS COAL. THE FOURTH BOILER, AT 150,000 LBS/HR, BEGAN OPERATIONS IN JUNE 1977 AND ITS FGD SYSTEM WAS BYPASSED UNTIL OCTOBER 1977.

FMC ENVIRONMENTAL EQUIPMENT DIVISION HAS SUPPLIED AN AIR QUALITY CONTROL SYSTEM CONSISTING OF A VENTURI SCRUBBER FOR PARTICULATE CONTROL AND AN ABSORBER MODULE FOR SO2 CONTROL. FMC CONCENTRATED MODE, DOUBLE ALKALI FGD TECHNOLOGY IS BEING USED IN THE ABSORBER MODULES. THE TWO 150,000 LB/HR BOILERS HAVE MECHANICAL COLLECTORS REMOVING ABOUT 90% OF THE INLET FLYASH. THE SCRUBBING TRAINS ON THE TWO SMALLER BOILERS HAVE NO PRECEDING MECHANICAL COLLECTORS.

WHILE THE FLYASH IN THE FINAL FILTER CAKE PROVIDES ADDED MECHANICAL STABILITY, THE HIGH ASH CONTENT IN THE RECIRCULATING SLURRY CAUSED SEVERE EROSION/ABRASION PROBLEMS IN EARLY OPERATIONS. THE ORIGINALLY INSTALLED WEIR TYPE CONTROL VALVES HAVE BEEN REPLACED WITH SPOOL PIECES AND A CONSTANT VOLUME PUMPING SYSTEM. THERE WAS ALSO SIGNIFICANT WEAR IN THE VENTURI SCRUBBER BOTTOMS, WHICH WAS SOLVED BY THE INSTALLATION OF WEAR PLATES.

SEVERAL PROBLEM AREAS WERE IDENTIFIED AND DEALT WITH DURING THE TWO HEATING SEASONS PRIOR TO THE 1977-78 SEASON.

PUMPS - THE RUBBER-LINED SLURRY PUMPS WERE OVERSIZED WHICH CAUSED HIGH PIPE VELOCITIES AND ACCELERATED WEAR ON THE PUMP LININGS. THESE PUMPS WERE REVISED TO LOWER THEIR OUTPUT. LOW SEAL WATER PRESSURE ALLOWED PROCESS LIQUOR TO GET INTO THE PUMP AND PACKING. ALL SEAL WATER IS NOW ONCE-THROUGH AND SYSTEM PRESSURES HAVE BEEN ADJUSTED TO MAINTAIN SEAL WATER PRESSURE

SECTION 9 (CONTINUED)

PERFORMANCE DESCRIPTION FOR OPERATIONAL FGD SYSTEMS ON INDUSTRIAL BOILERS

CATERPILLAR TRACTOR CO.; MOSSVILLE, ILLINOIS (CONTINUED)

ABOVE PROCESS LIQUID PRESSURES.

SLUDGE HANDLING - SLUDGE IS TRANSPORTED FROM THE VACUUM FILTERS TO THE LOADING AREA ON A BELT CONVEYOR. SEVERAL STRATEGIES, ALL INVOLVING SCRAPING OR PLOWING THE DEWATERED SLUDGE OFF THE BELT, RESULTED IN EXCESSIVE WEAR OF EITHER THE BELTS OR THE PLOWS. THE PRESENT APPROACH SIMPLY DUMPS THE MATERIAL OFF THE END OF THE BELT INTO BINS. THE POSITION OF THE BELT IS CHANGEABLE SO THAT EIGHT BINS CAN BE FILLED BEFORE THEY MUST BE EMPTIED. A FURTHER MODIFICATION HAS A DUAL POSITION CHUTE UNDER EACH BELT END POSITION, SO THAT A TOTAL OF 16 BINS CAN BE PLACED ON IT AT A TIME. SLUDGE BINS ARE THEN LOADED HYDRAULICALLY INTO TRUCKS AND HAULED TO THE SANITARY LANDFILL AREA. ANOTHER PROBLEM, COLD WEATHER ICING ON THE SLUDGE LOADING AREA, WAS SOLVED BY ENCLOSING THE AREA.

INSTRUMENTATION - ORIGINAL DESIGN PLANS CALLED FOR CONTROL BY THE MONITORING OF THE SO3/SO4 RATIO AND SODIUM ION CONCENTRATION. THE CONTROL RANGE WAS FOUND TO BE TOO SMALL AND THE PRESENT APPROACH IS PH CONTROL (6.5) AND CLEANING OF THE PROBES EVERY OTHER DAY.

ORIGINAL DESIGN DID NOT MONITOR SO2 CONCENTRATION BUT A COMPLETE MONITOR SYSTEM WAS INSTALLED PRIOR TO THE 1977-78 SEASON.

PIPING - MODIFICATIONS HAVE BEEN MADE WHICH FACILITATE CLEANING OR SCHEDULED REPLACEMENT.

OPERATING HISTORY

4TH QUARTER-1977 CATERPILLAR BEGAN A PROCEDURE OF DETAILED RECORD KEEPING, BUT THE FLOW OF INFORMATION WAS NOT YET SUCH THAT IT WAS AVAILABLE TO THIS REPORT.

2ND QUARTER-1978 NUMEROUS BOILER-RELATED PROBLEMS HAVE COMPOUNDED FGD SYSTEM PROBLEMS. MAJOR FGD PROBLEM AREAS WERE AS FOLLOWS:

EROSION OF SCRUBBER LINER MATERIAL.

EXCESSIVE WEAR OF PIPING, PUMPS, AND CONTROL VALVES.

SLUDGE FREEZE-UP ON THE CONVEYOR BELT PLUGGED SLUDGE CHUTES.

SECTION 9 (CONTINUED)

PERFORMANCE DESCRIPTION FOR OPERATIONAL FGD SYSTEMS ON INDUSTRIAL BOILERS

INSTALLATION NAME	CHEVRON U.S.A. INC.
INSTALLATION LOCATION	BAKERSFIELD, CALIFORNIA
SOURCE CHARACTERISTICS	OIL (1.1% SULFUR)
SOURCE RATING	248,000 SCFM (TOTAL - 18 BOILERS)
	150,000 ACFM @ 500F, FOR EACH OF 3 FGD SYSTEMS.
NUMBER OF SEPARATE FGD UNITS	3
SOURCE CAPACITY	900 MM BTU/HR (TOTAL - 18 BOILERS; 6 BOILERS/ FGD SYSTEM).
	85 MW (EQUIVALENT); 900 MM BTU/HR: TOTAL - 18 BOILERS
	125 MW (EQUIVALENT), TOTAL - 18 BOILERS
CONTROL SYSTEM VENDOR	KOCH ENGINEERING
CONTROL PROCESS	SODIUM CARBONATE SCRUBBING
NEW / RETROFIT	RETROFIT
START-UP DATE	JULY, 1978
CONTROL SYSTEM STATUS	OPERATIONAL
SO2 EFFICIENCY	90% (70 PPM @ OUTLET)
SLUDGE OR BY-PRODUCT DISPOSAL	WASTEWATER TREATMENT AND DISCHARGE TO TAILINGS POND
CONTROL SYSTEM COST	CAPITAL:$2,800,000 (1978). THIS IS TOTAL INSTALLED COST OF THE FGD SYSTEM, INCLUDING SITE PREPATION.
	OPERATING: APPROXIMATELY $900/DAY PER SCRUBBER(1978). THIS CORRESPONDS TO A TOTAL OF $ 920,000/YR FOR ALL THE SYSTEMS @ 340 DAYS/YR. THE COST INCLUDES ELECTRICITY, SODA ASH, AND MAINTENANCE (LABOR AND MATERIALS).

BACKGROUND INFORMATION

CHEVERON U.S.A. HAS AN OIL SITE AT BAKERSFIELD,CALIFORNIA. THERE ARE ABOUT 50 STEAM GENERATORS WHICH BURN 1.1% SULFUR CRUDE OIL. EACH GENERATOR IS RATED AT 50 MM BTU/HR. THE STEAM IS USED TO HEAT OIL AND FACILITATE ITS FLOW UPWARDS FROM THE OIL WELLS.

KOCH ENGINEERING HAS COMMISSIONED THREE FGD SYSTEMS IN JUNE/JULY 1978. THE SODIUM CARBONATE SCRUBBING PROCESS IS USED, WITH EACH SCRUBBER TREATING FLUE GASES FROM 6 GENERATORS WITH A TOTAL FLOW RATE OF 150,000 ACFM AT 500 F. THERE ARE 3 KOCH FLEXITRAYS AND A KOCH FLEXIMESH DEMISTER IN EACH SCRUBBER. THE SPENT LIQUOR IS MIXED WITH FRESH SODIUM CARBONATE IN THE BOTTOM OF THE SCRUBBER. A CONTINUOUS BLEED OFF STREAM IS TAKEN TO DISPOSALPOND, WHEREAS REST OF THE LIQUOR IS RECIRCULATED. A PH OF 6-6.5 IS MAINTAINED AT THE TOP TRAY AND A L/G RATIO OF 5 GALLONS/1000 ACF IS USED. THERE IS NO REHEAT FACILITY BUT THE SCRUBBER CAN BE BYPASSED. THE BOILER I.D. FANS WILL BE UPGRADED TO OFFSET

SECTION 9 (CONTINUED)

PERFORMANCE DESCRIPTION FOR OPERATIONAL FGD SYSTEMS ON INDUSTRIAL BOILERS

CHEVRON U.S.A. INC.; BAKERSFIELD, CALIFORNIA (CONTINUED)

THE PRESSURE DROP OF 9 IN. WG. THE SCRUBBERS ARE DESIGNED TO REMOVE 90% OF SO2 AND MAINTAIN EXIT SO2 CONCENTRATION BELOW 70 PPM. EACH SCRUBBER IS 16.5 FEET DIA. AND 55 FEET HIGH. THE HEIGHT INCLUDES THAT OF A STUB STACK SITUATED ON TOP OF EACH SCRUBBER.

THE SCRUBBERS AND TRAYS ARE MADE OF 316L SS AND THE FLEXIMESH IS INCOLOY 825. THE STACK IS MADE OF 316 SS AND THE PIPING IS FRP.

SECTION 9 (CONTINUED)

PERFORMANCE DESCRIPTION FOR OPERATIONAL FGD SYSTEMS ON INDUSTRIAL BOILERS

INSTALLATION NAME	FIRESTONE TIRE AND RUBBER CO.
INSTALLATION LOCATION	POTTSTOWN, PENNSYLVANIA
SOURCE CHARACTERISTICS	2.5-3.0% SULFUR COAL
SOURCE RATING	6070 SCFM (13,000 ACFM @ 300 F)
NUMBER OF SEPARATE FGD UNITS	1
SOURCE CAPACITY	3 MW (EQUIVALENT)
CONTROL SYSTEM VENDOR	FMC ENVIRONMENTAL EQUIPMENT
CONTROL PROCESS	DOUBLE ALKALI (CONCENTRATED)
NEW / RETROFIT	RETROFIT
START-UP DATE	JANUARY, 1975
CONTROL SYSTEM STATUS	OPERATIONAL
SO2 EFFICIENCY	90.5% (1000 PPM @ INLET)
PARTICULATE EFFICIENCY	97.4% (5 LB/MM BTU @ INLET TO MECHANICAL COLLECTOR.)
SLUDGE OR BY-PRODUCT DISPOSAL	DEWATERED SLURRY TO LANDFILL
CONTROL SYSTEM COST	CAPITAL: $163,000 (1974). THIS COST INCLUDES EQUIPMENT, ENGINEERING, AND STARTUP. THE COST DOES NOT INCLUDE LABOR AND MATERIALS FOR ELECTRICAL SYSTEM, PIPING, OR STRUCTURAL AND FOUNDATIONS ERECTION. OPERATING: $60,000/YR (1977). THIS COST INCLUDES CHEMICALS, LABOR, ELECTRICITY, DISPOSAL, MATERIALS, AND LAB WORK.

BACKGROUND INFORMATION

THE FIRESTONE TIRE AND RUBBER CO. LOCATED IN POTTSTOWN, PENNSYLVANIA HAS BEEN OPERATING A FGD SYSTEM SINCE JANUARY 1975 AS A DEMONSTRATION-SCALE PLANT, DESIGNED TO TEST THE FEASIBILITY OF FGD ON INDUSTRIAL BOILERS. THE UNIT IS DEMONSTRATING 90 PERCENT SO2 REMOVAL EFFICIENCY WITH AN AVAILABILITY OF 94 PERCENT AND A FLUE GAS CAPACITY OF 13,000 ACFM OR EQUIVALENT OF 3.0 MW. THIS FLOW REPRESENTS APPROXIMATELY 1/4 THE TOTAL OUTPUT OF ONE 120,000 LB/HR STEAM BOILER. THE SULFUR DIOXIDE EMISSION REGULATION FOR THE PLANT IS 0.86 LBS/MILLION BTU OF HEAT OUTPUT.

THE PLANT IS USING THE CONCENTRATED DOUBLE ALKALI PROCESS PATENTED BY FMC CORPORATION. THE LOAD CAPACITY OF THE BOILER ON WHICH THE SCRUBBER IS OPERATING IS APPROXIMATELY 15 MW. IN OCTOBER 1976, THE BOILER WAS CONVERTED FROM BURNING RESIDUAL FUEL OIL (2.2% S) TO COAL (2.5-3.0% S).

THE VENTURI SCRUBBER IS SPRAYED WITH ALKALINE LIQUOR WHERE THE FLUE GAS ENTERS. THE FAN AND DAMPER UPSTREAM OF VENTURI CONTROL THE FLUE GAS FEED. SCRUBBING LIQUOR FLOWS FROM THE VENTURI TO THE BOTTOM OF CYCLONE DEMISTER AND THEN INTO THE RECIRCULATION TANK. DROPLETS OF SCRUBBING LIQUOR ARE SPUN OUT IN THE CYCLONE AND RUN BACK DOWN IN THE RECIRCULATION TANK. THE SCRUBBING LIQUOR IS PARTLY RECIRCULATED TO THE VENTURI THUS COMPLETING THE SCRUBBING CYCLE. ACCUMULATION OF SOLUBLE

SECTION 9 (CONTINUED)

PERFORMANCE DESCRIPTION FOR OPERATIONAL FGD SYSTEMS ON INDUSTRIAL BOILERS

FIRESTONE TIRE AND RUBBER CO. ; POTTSTOWN, PENNSYLVANIA (CONTINUED)

SODIUM BISULFITE IS PREVENTED BY CONTINUOUSLY DRAWING OFF A SMALL STREAM OF SCRUBBER SOLUTION TO THE LIME REACTOR TANK WHERE THE SODIUM SULFITE REACTS WITH LIME TO FORM CALCIUM SULFITE AND SODIUM HYDROXIDE WHICH IS RECYLCED TO THE ABSORBER. CALCIUM SULFITE SLURRY IS TRANSFERRED TO THE ROTARY ROTARY FILTER. THE FILTER CAKE FORMED (180 LBS/HR, 55 % SOLIDS) IS HAULED TO THE LANDFILL. THE WATER BALANCE IS MAINTAINED BY MAKING UP FOR THE LOSSES BY EVAPORATION AND IN THE FILTER CAKE.

THE VENTURI SCRUBBER HAS A VARIABLE THROAT (6 IN. TO 15 IN.) AND IS MADE OF 316L SS. THE OPERATING VELOCITY THROUGH THE VENTURI THROAT IS 200 FT/SEC @ 130F. THE OPERATING L/G IS 10 GAL/1000 ACF. THE SPRAY NOZZLES ARE ALSO MADE OF 316L SS. THE CYCLONIC DEMISTER (4.75 FT DIA X 7 FT HIGH) OPERATES WITH A PRESSURE DROP OF 2" WG. GAS VELOCITY THROUGH THE DEMISTER IS 100 FT/SEC @ 130F. THE DEMISTER, RECIRCULATION TANK, AGITATOR, RECIRCULATION PIPING, AND THE FILTER ARE MADE OF 316L SS. THE INLET DUCTWORK, F.D. FAN, THICKENER, AND LIME REACTOR TANK ARE CARBON STEEL. THE RECIRCULATION PUMP IS CAST IRON WITH RUBBER LINING AND THE STACK IS FRP.

OPERATING HISTORY

1ST QUARTER-1975 THE SYSTEM WENT ONSTREAM BURNING 2.2% SULFUR OIL. THE FGD SYSTEM OPERATED 687 HOURS AND WAS CALLED UPON TO OPERATE 819 HOURS, YIELDING A RELIABILITY OF 84.5%. DOWNTIME WAS DUE PRIMARILY TO FAILURES OF COMPONENTS SUCH AS PUMP PACKING.

2ND QUARTER-1975 THE SYSTEM OPERATED 1454 HOURS AND WAS CALLED UPON TO OPERATE 1509 HOURS, YIELDING A RELIABILITY INDEX VALUE OF 96.4%.

3RD QUARTER-1975 SYSTEM OPERATED 1436 HOURS, WAS CALLED UPON TO OPERATE 1503 HOURS, YIELDING A RELIABILITY INDEX VALUE OF 95.5%.

4TH QUARTER-1975 SYSTEM OPERATED 1320 HOURS, WAS REQUIRED TO OPERATE 1493 HOURS, YIELDING A RELIABILITY INDEX VALUE OF 88.4%. LIME FEEDER MALFUNCTIONING AND THICKENER PLUGGING WERE PROBLEMS.

1ST QUARTER-1976 SYSTEM OPERATED 1961 HOURS, WAS CALLED ON TO OPERATE 2035 HOURS, YIELDING A RELIABILITY INDEX VALUE OF 96.4%.

2ND QUARTER-1976 SYSTEM OPERATED 1280 HOURS, WAS CALLED UPON TO OPERATE 1335 HOURS, YIELDING A RELIABILITY INDEX VALUE OF 95.9%.

3RD QUARTER-1976 SYSTEM OPERATED 1157 HOURS, WAS CALLED UPON TO OPERATE 1166 HOURS, THUS DEMONSTRATING ITS HIGHEST RELIABILITY INDEX VALUE, 99.2%.

4TH QUARTER-1976 IN OCTOBER, THE SYSTEM OPERATED AT A RELIABILITY INDEX OF 100%, UNTIL THE UNIT WAS CONVERTED TO COAL FIRING (2.5 - 3.0% SULFUR). THE SYSTEM OPERATED FOR AN ADDITIONAL 511 HOURS, OF THE 526 REQUIRED, DEMONSTRATING A RELIABILITY INDEX VALUE OF 97.2%. IN NOVEMBER AND DECEMBER, THE SYSTEM OPERATED FOR 1172 HOURS AGAINST THE REQUIREMENT OF 1211 HOURS. THEREFORE, THE AVERAGE RELIABILITY INDEX FOR THE TWO MONTHS WAS 96.7%.

1ST QUARTER-1977 SYSTEM OPERATED 1193 HOURS, WAS REQUIRED TO OPERATE FOR 1459 HOURS, YIELDING A RELIABILITY INDEX VALUE OF 81.7%. SYSTEM WAS DESIGNED FOR A MUCH LOWER PARTICULATE LOADING THAN

SECTION 9 (CONTINUED)

PERFORMANCE DESCRIPTION FOR OPERATIONAL FGD SYSTEMS ON INDUSTRIAL BOILERS

FIRESTONE TIRE AND RUBBER CO. ; POTTSTOWN, PENNSYLVANIA (CONTINUED)

THAT ACTUALLY ENCOUNTERED ON COAL FIRING. THE HIGH GRAIN LOADING CAUSED ABNORMAL WEAR AND DOWNTIME OF THE F.D. FAN.

2ND QUARTER-1977 SYSTEM OPERATED 1398 HOURS, WAS REQUIRED TO OPERATE 1690 HOURS, YIELDING A RELIABILITY INDEX VALUE OF 82.7%. THE MAJOR CAUSES OF DOWNTIME WERE F.D. FAN EROSION AND PUMP COMPONENT FAILURES.

3RD QUARTER-1977 SYSTEM OPERATED 1131 HOURS, WAS REQUIRED TO OPERATE 1197 HOURS, YIELDING A RELIABILITY FIGURE OF 94.5%. THE TOTAL REQUIRED HOURS WERE LOW IN JULY DUE TO BOILER HOUSE SHUTDOWN AND SUBSEQUENT START-UP.

4TH QUARTER-1977 IN OCTOBER, THE SYSTEM OPERATED 432 HOURS OUT OF THE 511 REQUIRED AS THE BOILER WAS FIRING COAL. THE RELIABILITY VALUE WAS THEREFORE 84.6%. DOWNTIME WAS CAUSED BY PROBLEMS WITH THE LIME CONVEYOR. WHEN OIL WAS BEING FIRED THE SYSTEM OPERATED 95 OF THE 102 HOURS REQUIRED, DEMONSTRATING A RELIABILITY VALUE OF 92.6%. IN NOVEMBER AND DECEMBER, THE SYSTEM OPERATED 792 HOURS OF THE REQUIRED 854, WHILE BURNING COAL, YIELDING A RELIABILITY OF 86.7%. DOWNTIME WAS CAUSED BY FAN PROBLEMS AND LIME FEEDER PROBLEMS.

1ST QUARTER-1978 THE SPRAY NOZZLES, ORIGINALLY 316 STAINLESS STEEL, WERE REPLACED BY 316L SS. THE SPRAY BARS WERE METALLIZED WITH 316 SS.

2ND QUARTER-1978 THE FAN WAS REPLACED BY A NEW FAN CONSTRUCTED OF AN ABRASION RESISTANT CARBON STEEL. THE FAN HOUSING WAS METALLIZED WITH 316 SS. LEAKS IN THE VENTURI SECTION AND DOWNSTREAM DUCTWORK WERE REPAIRED.

SECTION 9 (CONTINUED)

PERFORMANCE DESCRIPTION FOR OPERATIONAL FGD SYSTEMS ON INDUSTRIAL BOILERS

INSTALLATION NAME	FMC (SODA ASH PLANT)
INSTALLATION LOCATION	GREEN RIVER, WYOMING
SOURCE CHARACTERISTICS	COAL (1% SULFUR)
SOURCE RATING	446,000 SCFM (TOTAL - 2 BOILERS)
NUMBER OF SEPARATE FGD UNITS	2
SOURCE CAPACITY	220 MW (EQUIVALENT): TOTAL - 2 BOILERS
CONTROL SYSTEM VENDOR	FMC ENVIRONMENTAL EQUIPMENT
CONTROL PROCESS	SODIUM CARBONATE SCRUBBING
NEW / RETROFIT	NEW
START-UP DATE	MAY, 1976
CONTROL SYSTEM STATUS	OPERATIONAL
SO2 EFFICIENCY	95% (800 PPM AT INLET)
PARTICULATE EFFICIENCY	REMOVED BY PRECEDING ESP (99.5%)
WATER MAKE-UP	OPEN LOOP* L/G = 15-20 GAL/1000 ACF
SLUDGE OR BY-PRODUCT DISPOSAL	HOLDING POND FOR EVAPORATION NA2SO3/SO4 LIQUOR DISPOSED TO COLLECTION POND - NO PRIOR AERATION. LANDFILL IN THE FUTURE
CONTROL SYSTEM COST	CAPITAL COST INCLUDES ESP

BACKGROUND INFORMATION

FMC CHEMICAL CORP. HAS A SODA ASH PLANT IN GREEN RIVER, WYOMING. THE PLANT HAS TWO COAL-FIRED POWER BOILERS WHICH BURN 1.1 PERCENT SULFUR COAL. THE FLUE GAS FROM EACH BOILER (330,000 ACFM AT 320 F) IS TREATED BY A HOTSIDE ESP WITH 286 PLATES AND A PARTICULATE REMOVAL EFFICIENCY OF 99.5 %.

THE FLUE GASES ARE SCRUBBED BY THE PLANT END-LIQUOR IN TWO SCRUBBERS, EACH WITH THREE PAIRS OF DISC-AND-DONUT TRAYS. THE SCRUBBERS AND THE DISCS ARE LINED WITH CEILCOTE 103 WHEREAS THE DONUT PARTS OF THE TRAYS ARE MADE FROM INCONEL 825. THE SCRUBBER LIQUOR IS MAINTAINED AT A PH OF 6.5 AND IS RECIRCULATED AT A RATE OF 10 - 15 GALLONS/1000 ACF OF FLUE GAS. A PART OF THE RECIRCULATING LIQUOR IS CONTINUOUSLY PURGED TO REMOVE SULFITES AND SULFATES FORMED BY THE REACTION OF SO2 WITH SODA ASH. THE RECIRCULATING PUMPS AND THE RELATED PIPING IS RUBBER LINED. A MESH TYPE DEMISTER IS USED IN EACH SCRUBBER. THE GASES ARE REHEATED BY DIRECT FIRING OF NATURAL GAS AT THE EXIT OF THE SCRUBBERS. THE REHEATED FLUE GAS IS MIXED WITH BYPASSED GAS BEFORE GOING TO THE STACK AT ABOUT 180 F.

AUTOMATIC CONTROLS MAINTAIN SOLUTION LEVEL IN THE SCRUBBER BASIN. THE PRIMARY SOURCE OF WATER MAKE-UP IS PROCESS WASTEWATER WHICH IS CHANNELED TO A MAKE-UP TANK. IF MORE MAKE-UP IS REQUIRED, RIVER WATER IS TAPPED. THE SCRUBBER BLEED STREAM IS DISCHARGED TO A WASTE POND AT THE SITE. DAMPERS WITH REMOTE CONTROLS REGULATE THE FLOW OF OFF GAS THROUGH AND AROUND THE SCRUBBERS. APPROXIMATELY 50% OF TOTAL FLUE GAS IS RUN THROUGH THE SCRUBBERS.

SECTION 9 (CONTINUED)

PERFORMANCE DESCRIPTION FOR OPERATIONAL FGD SYSTEMS ON INDUSTRIAL BOILERS

FMC (SODA ASH PLANT); GREEN RIVER, WYOMING (CONTINUED)

OPERATING HISTORY

3RD QUARTER-1977 SOME PROBLEMS HAVE OCCURRED WITH THE SCRUBBER LINING AS A RESULT OF FAULTY INSTALLATION. THE POSSIBILITY OF RUNNING THE SYSTEM WITH NO REHEAT IS BEING INVESTIGATED.

4TH QUARTER-1977 THE SCRUBBERS HAVE CORRODED AS A RESULT OF FAULTY INSTALLATION OF THE LINING. THE IMPURITIES IN THE SCRUBBING LIQUOR CAUSE FOAMING AND SEDIMENTATION ON THE TRAYS.

1ST QUARTER-1978 PIPELINE FREEZUPS, AND LEAKS FROM THE VANE DAMPERS WERE THE MAIN PROBLEM AREAS.

2ND QUARTER-1978 THE DEMISTER WAS PLUGGED, AND THE RECIRCULATION PUMP WAS DOWN FOR SOME PERIOD. PH CONTROL IS NOT VERY EFFECTIVE, CAUSING PH EXCERSIONS TO ABOUT 3.0. THIS HAS CAUSED SCALING IN THE PIPELINES AND IN THE TOWER. FMC TESTS HAVE MEASURED SO2 REMOVAL EFFICIENCY IN THE RANGE OF 87%-94%, DEPENDING ON L/G AND PH.

SECTION 9 (CONTINUED)

PERFORMANCE DESCRIPTION FOR OPERATIONAL FGD SYSTEMS ON INDUSTRIAL BOILERS

INSTALLATION NAME	GENERAL MOTORS CORPORATION
INSTALLATION LOCATION	DAYTON, OHIO
SOURCE CHARACTERISTICS	COAL(0.7% - 2.0% SULFUR)
SOURCE RATING	36,000 SCFM (TOTAL - 2 BOILERS)
	34,000 ACFM @ 500F, FOR EACH OF TWO BOILERS.
	120,000 LB/HR STEAM (TOTAL)
NUMBER OF SEPARATE FGD UNITS	2
SOURCE CAPACITY	14 MW (EQUIVALENT); TOTAL
CONTROL SYSTEM VENDOR	ENTOLETER, INC.
CONTROL PROCESS	SODIUM HYDROXIDE SCRUBBING
NEW / RETROFIT	RETROFIT
START-UP DATE	SEPTEMBER, 1974
CONTROL SYSTEM STATUS	OPERATIONAL
SO2 EFFICIENCY	86% (1.43 LB/MM BTU @ INLET)
PARTICULATE EFFICIENCY	97.5% (0.107 LB/MM BTU @ OUTLET)
WATER MAKE-UP	50 GPM
SLUDGE OR BY-PRODUCT DISPOSAL	WASTEWATER TREATMENT AND DISCHARGE TO CITY SEWER
	NA2SO3/SO4 LIQUOR AT 35 GPM TO ON-SITE CLARIFICATION AND DEWATERING FACILITY
CONTROL SYSTEM COST	CAPITAL: $668,000 (1974). THIS IS THE TOTAL INSTALLED COST FOR THE TWO FGD SYSTEMS.

BACKGROUND INFORMATION

IN DAYTON, OHIO, GENERAL MOTORS OPERATES A FACTORY WHICH MANUFACTURES BRAKES AND OTHER PARTS FOR THEIR AUTOMOBILES. THE PLANT HAS TWO STOKER-FEED, COAL-FIRED BOILERS WHICH WERE INSTALLED IN 1954 BY BABCOCK AND WILCOX. EACH BOILER IS RATED AT 60,000 LB/HR STEAM, AND BURNS A MAXIMUM OF 3 TONS OF COAL PER HOUR. THE BOILERS ARE EQUIPPED WITH INTERNAL MULTICLONES FOR PRIMARY PARTICULATE CONTROL. THE STEAM GENERATED BY THESE BOILERS IS USED FOR BUILDING HEAT AND PROCESS NEEDS. DURING THE MAJORITY OF THE TIME (8 - 10 MONTHS/YR) ONLY ONE BOILER IS IN SERVICE.

THE EMISSIONS CONTROL SYSTEM WAS DESIGNED TO CONTROL BOTH FLYASH AND SO2, AND WAS SUPPLIED AS A RETROFIT APPLICATION BY ENTOLETER, INC. IN SEPTEMBER 1974. EACH BOILER IS FOLLOWED BY A BOILER I.D. FAN, A PLENUM, AND A SCRUBBER F.D. FAN. THE PLENUM CAN FUNCTION IN ONE OF THREE WAYS: IT CAN FEED FLUE GASES TO THE SCRUBBER MODULE; IT CAN BYPASS THE GASES TO THE ATMOSPHERE IN CASE OF A SCRUBBER MALFUNCTION; OR IT CAN MIX AMBIENT AIR WITH THE FLUE GASES IN CASE OF LOW LOAD IN ORDER TO MAINTAIN CONSTANT AIR FLOW TO THE SCRUBBER FAN.

THE SCRUBBER CONSISTS OF THE ENTOLETER "VANE-CAGE" (5 FT. DIA. X 5 FT. HIGH) WHICH IS HOUSED IN

SECTION 9 (CONTINUED)

PERFORMANCE DESCRIPTION FOR OPERATIONAL FGD SYSTEMS ON INDUSTRIAL BOILERS

GENERAL MOTORS CORPORATION; DAYTON, OHIO (CONTINUED)

A CONICAL BOTTOM SECTION (8 FT. DIA. X 5 FT. HIGH), AN INTERMEDIATE SECTION (6 FT. DIA. X 5 FT. HIGH), AND A DISENGAGEMENT ZONE (10 FT. DIA. X 12 FT. HIGH). THE FLUE GAS (34,000 ACFM @ 500F) ENTERS THE BOTTOM SECTION TANGENTIALLY. RECIRCULATING LIQUOR IS SPRAYED FROM THE TOP OF THE VANE CAGE SECTION, WHICH CAN BE MOVED VERTICALLY TO VARY THE PRESSURE DROP ACROSS THE SCRUBBER. A PRIMARY DEMISTER IS LOCATED ABOVE THE PREVIOUSLY MENTIONED INTERMEDIATE SECTION AND A SECONDARY DEMISTER IS LOCATED ATOP THE DISENGAGEMENT ZONE. THE GAS THEN PASSES THROUGH A STUB STACK TO THE ATMOSPHERE. SCRUBBING LIQUOR IMPINGES ON THE BOTTOM OF THE VANE CAGE AND A SPRAY CHAMBER EFFECT PROVIDES THE SO2 REMOVAL. SCRUBBER UNDERFLOW, CONTAINING PARTICULATE AND A NA2SO3/SO4 SOLUTION IS SENT TO THE RECYCLE TANK, WHERE MAKEUP WATER AT A RATE OF 50 GPM IS ADDED. RECYCLE PUMPS TAKE LIQUOR FROM THE TOP OF THE RECYCLE TANK, ALONG WITH THE CAUSTIC STREAM ADDED TO THE FEED LINE, AND RECIRCULATE IT TO THE TOP OF THE VANE CAGE AT A RATE OF 200 GPM. THE L/G RATIO IS 6 GAL/1000 ACF , AND A TYPICAL PRESSURE DROP ACROSS THE SCRUBBER IS 7" WG. A BLEED-OFF FROM THE RECIRCULATION LINE, 50 GPM, IS PURGED TO A WASTEWATER TREATMENT FACILITY, WHICH CLARIFIES ALL THE PLANT WASTE STREAMS, ADJUSTS THE PH (7 - 9), AND DISCHARGES TO CITY SEWERS.

ABSORBER MODULES, DEMISTERS, STACKS, AND THE RECYCLE TANK ARE CONSTRUCTED OF 316L STAINLESS STEEL. THE SCRUBBER F.D. FANS, PLENUMS, CAUSTIC TANK, CAUSTIC PUMP, AND INLET DUCTWORK ARE ALL CARBON STEEL. THE RECIRCULATION PUMPS AND PIPING ARE RUBBER-LINED.

THE TOTAL INSTALLED COST OF THE SYSTEM WAS $668,000 IN 1974 DOLLARS. THE AVERAGE OUTLET SO2 CONCENTRATION IS 0.21 LB/MM BTU, WELL UNDER THE REGULATION OF 1.0 LB/MM BTU. THE OUTLET PARTICULATE LOADING IS 0.107 LB/MM BTU AND THE REGULATION IS 0.177 LB/MM BTU.

OPERATING HISTORY

4TH QUARTER-1974 UPON START-UP, SEVERAL PROBLEMS WERE ENCOUNTERED. PARTICULATE BUILDUP CAUSED PLUGGING OF THE RECYCLE TANK DRAIN AND WASTE STREAM SUMP PUMPS. AIR PURGE STREAMS WERE INSTALLED TO ALLEVIATE THESE PROBLEMS.

1ST QUARTER-1975 THE DAMPERS AND DAMPER CONTROL SYSTEMS WERE MAJOR PROBLEMS. THREE SETS OF EXPANSION JOINTS HAD TO BE INSTALLED BEFORE ACHIEVING PROPER FLOW CONTROL.

2ND QUARTER-1975 A FAN BEARING HAD TO BE REPLACED THREE TIMES.

3RD QUARTER-1975 INSTRUMENTATION AND CONTROL PROBLEMS PROMPTED WIRING REVISIONS.

4TH QUARTER-1976 THE FGD SYSTEM DEMONSTRATED AN AVAILABILITY OF 93 PERCENT.

1ST QUARTER-1977 MECHANICAL PROBLEMS WITH THE VANE CAGE DRIVE. THE ACCESS DOOR DEVELOPED LEAKS AND THE LIQUOR CORRODED THE OUTER SURFACE OF THE INLET DUCT AROUND THE ACCESS DOOR.

4TH QUARTER-1977 CORROSION AND PLUGGING PROBLEMS CONTINUED TO HAMPER SCRUBBER OPERATIONS. HOWEVER, USUALLY WHEN A SCRUBBER IS DOWN, THE OTHER BOILER IS FIRED UP WHILE REPAIRS ARE MADE TO THE DOWNED UNIT.

1ST QUARTER-1978 THE PRIMARY DEMISTER WAS SEVERELY CORRODED DUE TO ACID DROPPING DOWN ONTO IT

SECTION 9 (CONTINUED)

PERFORMANCE DESCRIPTION FOR OPERATIONAL FGD SYSTEMS ON INDUSTRIAL BOILERS

GENERAL MOTORS CORPORATION; DAYTON, OHIO (CONTINUED)

FROM THE UPPER DEMISTER.

2ND QUARTER-1978 THE FOLLOWING SYSTEM MODIFICATIONS WERE BEING PLANNED: THE INTERMEDIATE SECTION WILL BE REMOVED, THE PRIMARY DEMISTER WILL BE REPLACED BY A SIMILAR VANE-TYPE HASTELLOY-G DEMISTER, THE SECONDARY DEMISTER WILL BE REPLACED BY A RADIAL VANE HASTELLOY-G DEMISTER, AND A CONVEX IMPINGEMENT BAFFLE PLATE OF HASTELLOY-G WILL BE INSTALLED ABOVE THE PRIMARY DEMISTER TO ASSIST IN RAPID DRAINAGE OF THE ACID DROPLETS.

SECTION 9 (CONTINUED)

PERFORMANCE DESCRIPTION FOR OPERATIONAL FGD SYSTEMS ON INDUSTRIAL BOILERS

INSTALLATION NAME	GENERAL MOTORS CORPORATION
INSTALLATION LOCATION	PARMA, OHIO
SOURCE CHARACTERISTICS	COAL (2.5% SULFUR* 7.1% ASH* 13,350 BTU/LB)
SOURCE RATING	128,400 SCFM @ 70 F (TOTAL - 4 BOILERS)
	320,000 LB/HR STEAM (TOTAL)
NUMBER OF SEPARATE FGD UNITS	1
SOURCE CAPACITY	32 MW (EQUIVALENT); TOTAL - 4 BOILERS
CONTROL SYSTEM VENDOR	GM ENVIRONMENTAL
CONTROL PROCESS	DOUBLE ALKALI (DILUTE)
NEW / RETROFIT	RETROFIT
START-UP DATE	MARCH, 1974
CONTROL SYSTEM STATUS	OPERATIONAL
SO2 EFFICIENCY	90% (800-1300 PPM @ INLET)
PARTICULATE EFFICIENCY	83% (AT INLET: UNITS 1&2 - 1.75 LB/MIN* UNITS 3&4 - 1.22 LB/MIN)
WATER MAKE-UP	CLOSED LOOP
SLUDGE OR BY-PRODUCT DISPOSAL	DEWATERED SLURRY TO LANDFILL
	50 + % SOLIDS (CASO3/SO4) SLUDGE TO DRYING POND AND LANDFILL
CONTROL SYSTEM COST	OPERATING COSTS ARE $643,500/YR @ 55,000 TPY OF COAL

BACKGROUND INFORMATION

THE CHEVROLET PARMA PLANT OF GENERAL MOTORS IS LOCATED NEAR CLEVELAND, OHIO. THE PLANT HAS FOUR SPREADER-STOKER BOILERS FIRED BY TRAVELING GRATES, CAPABLE OF PRODUCING A TOTAL OF 320,000 LB/HR OF STEAM OR APPROXIMATELY 32 MW OF EQUIVALENT ELECTRICAL CAPACITY. THE COAL FIRED IN THESE UNITS ORIGINATES PRIMARILY FROM THE SOUTHEASTERN PORTION OF OHIO AND HAS THE FOLLOWING AVERAGE CHARACTERISTICS: HEAT CONTENT OF 11,300 BTU/LB, SULFUR CONTENT OF 1.7 TO 2.7 PERCENT, ASH CONTENT OF 6.8 TO 14.8 PERCENT, AND A TOTAL MOISTURE CONTENT OF 0.9 TO 7.8 PERCENT.

THE POWER BOILERS HAVE BEEN FITTED WITH AN EMISSION CONTROL SYSTEM CONSISTING OF MECHANICAL COLLECTORS UPSTREAM OF A DILUTE DOUBLE ALKALI SCRUBBING SYSTEM. THE FGD SYSTEM SCRUBBING MODULES WERE SUPPLIED BY KOCH ENGINEERING. INSTALLATION WAS COMPLETED ON FEBRUARY 28, 1974. THE SYSTEM CONSISTS OF FOUR SCRUBBERS OPERATING IN PARALLEL. EACH SCRUBBER CONTAINS THREE BUBBLE-CAP ABSORPTION TRAYS AND A MESH MIST ELIMINATOR. THE FLUE GAS RATE IS 61,500 ACFM AT 393 F FOR EACH OF THE FIRST TWO SCRUBBERS AND THE OUTLET TEMPERATURE IS 137 F. THE INLET SO2 CONCENTRATION IS 765 PPM. THE FLUE GAS FLOW RATE IS 58,600 ACFM AT 550 F FOR THE OTHER TWO SCRUBBERS AND THE OUTLET TEMPERATURE IS 152 F. THE INLET SO2 CONCENTRATION IS 800-1300 PPM. OUTLET CONCENTRATION VARIES FROM 136-220 PPM FOR THE SCRUBBERS.

THE SULFUR DIOXIDE CONTAINED IN THE BOILER FLUE GAS IS ABSORBED BY A REGENERATED CAUSTIC

SOLUTION (0.1 MOLAR NAOH), FORMING A SOLUTION OF SOLUBLE SODIUM SALTS. THE SPENT CAUSTIC IS THEN REGENERATED BY REACTING THE SODIUM SALT SOLUTION WITH SLAKED LIME, RESULTING IN THE FORMATION OF CALCIUM SULFITE/SULFATE SOLIDS, WHICH ARE SEPARATED OUT OF THE SOLUTION. NEXT, SODA ASH IS ADDED TO THE SOLUTION IN ORDER TO MAKE UP FOR SODIUM LOSSES AND MINIMIZE THE SCALE POTENTIAL FROM THE CALCIUM WHICH REMAINS IN SOLUTION. THE REGENERATED CAUSTIC FORMED IS THEN RECYCLED BACK TO THE SCRUBBER FOR ADDITIONAL SULFUR DIOXIDE REMOVAL. THE CALCIUM SALT AND FLY ASH SLUDGE WHICH RESULTS IS DEWATERED AND HAULED AWAY BY TRUCK TO AN OFF-SITE LANDFILL.

EQUIPMENT SPECIFICATIONS

SCRUBBERS. EACH OF THE 4 SCRUBBERS IS 10.5 FT DIA X 22.5 FT HIGH X 11 GAUGE THICK AND CONTAINS 3 BUBBLE-CAP TRAYS. ALL THE SCRUBBERS AND TRAYS ARE MADE OF 316 L SS. THE SCRUBBERS HAVE A TURNDOWN RATIO OF 3 AND ALSO HAVE A BYPASS DUCT. THE L/G RATIO HAS A DESIGN VALUE OF 20 GALLONS/ACF BUT IT MAY BE VARIED DURING OPERATION. THE PRESSURE DROP ACROSS THE SCRUBBER RANGES BETWEEN 8-9 INCHES WG.

DEMISTERS. ORIGINAL 316 SS DEMISTERS WERE CORRODED DUE TO CONDENSATION AND ARE REPLACED BY FLEXI-MESH TYPE POLYPROPYLENE ONES.

RECYCLE TANKS/PUMPS. ALL THE 4 RECYCLE TANKS ARE MILD STEEL WITH TAR TYPE RESIN COATING. THE PUMPS (TOTAL 6, 2 SPARE) ARE CENTRIFIGALS WITH MILD STEEL CASING AND HAVE RUBBER LINING. THE PUMP MOTORS HAVE 40 H.P.

CHEMICAL MIX TANKS & AGITATORS. BOTH THE MIX TANKS ARE MILD STEEL WITH 5000 GALLONS CAPACITY. THE DESIGN RESIDENCE TIME IS 7 MINUTES. NEW AGITATORS ARE PROPELLER TYPE. THESE ARE SPECIALLY DESIGNED TO GIVE HIGHER FLOW RATE THROUGH THE BLADES. THE DRIVE RATINGS ARE 5 HP AND 45 RPM.

CLARIFIERS. BOTH THE CLARIFIERS (60 FT DIA X 14 FT LIQUID DEPTH) HAVE A CONICAL BOTTOM AND 300,000 GALLONS CAPACITY. THE DESIGN RETENTION LINE IS ABOUT 4 HOURS AT FLOW RATE OF 1200 GPM.
VACUUM FILTERS. BOTH THE VACUUM FILTERS HAVE 500 SQ. FT. SURFACE AREA WITH 10 FT DRUM DIAMETER. THE DRUM DRIVE SPEED IS 0.5 RPM MAXIMUM.

FILTRATE TANK/PUMPS. THE TANK (4 FT DIA X 7 FT HIGH) IS MILD STEEL AND HOLDS 660 GALLONS OF FILTRATE. THE PUMPS ARE MILD STEEL, CENTRIFIGAL AND HAVE A CAPACITY OF 300 GPM AT 15 FT. OF HEAD.

PROBLEMS AND SOLUTIONS

THE SYSTEM WAS STARTED UP ON FEBRUARY 28, 1974 AND BY APRIL 31, IT HAD OPERATED FOR 264 HOURS. THERE WERE TWO SCHEDULED SHUTDOWNS DURING THIS PERIOD FOR EQUIPMENT INSPECTION. THE SECOND SHUTDOWN REVEALED THAT SOLIDS WERE NOT BEING DISCHARGED FROM THE PRIMARY CLARIFIER RAPIDLY ENOUGH. AS A RESULT, THE CLARIFIER RAKE JAMMED. A PIPING CHANGE WAS MADE TO BLEND THE CAUSTIC FEED IN WITH THE RECYCLE LIQUOR. THIS HAS IMPROVED PERFORMANCE BUT NOT COMPLETELY ELIMINATED

SECTION 9 (CONTINUED)

PERFORMANCE DESCRIPTION FOR OPERATIONAL FGD SYSTEMS ON INDUSTRIAL BOILERS

GENERAL MOTORS CORPORATION; PARMA, OHIO (CONTINUED)

THE PROBLEM. PREMATURE CAKE CRACKING IN THE VACUUM FILTERS REQUIRED THE PRESENCE OF AN OPERATOR DURING OPERATION. G.M. ANTICIPATES THAT THE CHANGE TO NYLON FROM POLYPROPYLENE WILL SOLVE THIS PROBLEM. CAKE WASHING TO REDUCE LOSSES WAS NOT INITIALLY SUCCESSFUL BECAUSE THE SPRAY WATER TENDED TO KNOCK THE CAKE OFF THE DRUM. ALTERATIONS IN SPRAY PATTERN AND OTHER MEASURES HAVE APPARENTLY SOLVED THIS PROBLEM. THERE HAS BEEN NO EVIDENCE OF CORROSION OR ABRASION IN THE PUMPS OR PIPING.

THE SYSTEM WAS SHUT DOWN FROM MAY 1 TO MAY 28, 1974, BECAUSE OF UNEXPECTED BUILDUP OF SOLIDS IN THE CLARIFIER, WITH SUBSEQUENT OVERFLOW INTO THE SCRUBBER. THE PROBLEM WAS SOLVED BY 1) USING A POLYMERIC FLOCCULATION AGENT TO ATTAIN BETTER SETTLING AND 2) WITHDRAWING SLUDGE FROM THE CLARIFIER AT MORE FREQUENT INTERVALS. SYSTEM AVAILABILITY TO THE BOILER WAS 87 PERCENT IN APRIL 1974, LESS THAN 10 PERCENT IN MAY, AND 100 PERCENT IN JUNE, JULY, AND AUGUST AFTER THE SYSTEM WAS RESTARTED. PLUGGING BY GYPSUM DEPOSITS IN THE OVERFLOW LINE BETWEEN THE CLARIFIERS AND IN THE LINE FROM CLARIFIER NO. 2 TO THE MIX TANKS WAS CORRECTED BY RELOCATING A CHEMICAL FEED LINE AND REPLACING SOME PIPING. THE SYSTEM WAS DOWN THROUGH JULY AND AUG. 1975 FOR REPLACEMENT OF GRAVITY FLOW LINES WITH AN OPEN FLUME THAT CAN BE EASILY CLEANED. ADDITIONAL MODIFICATIONS TO THE DESIGN AND OPERATION OF THE FGD SYSTEM HAVE CONTINUED. THE OPERABILITY INDEX FOR THE FGD SYSTEM HAS INCREASED SIGNIFICANTLY THROUGHOUT THE COURSE OF 1976. THE MAJOR PROBLEM AND SOLUTION AREAS, PLUS MODIFICATIONS IMPLEMENTED TO THE SYSTEM ARE HIGHLIGHTED BELOW IN THE SYSTEM PERFORMANCE TABLE.

OPERATING HISTORY

MONTH	OPERATION HOURS BOILER	OPERATION HOURS FGD SYSTEM	OPERABILITY (%)
THE SYSTEM WAS RESTARTED AND PARTICULATE TESTS WERE CONDUCTED IN MAY. THE SYSTEM WAS SHUT DOWN DUE TO PLUGGED CHEMICAL FEED LINE TO THE CLARIFIER AFTER RESTART. AROUND JUNE 10, THE SYSTEM WAS SHUTDOWN BECAUSE OF SIMILAR PLUGGING IN ANOTHER PART OT THE LINE. THE UNIT RAN FOR ABOUT TWO WEEKS IN JUNE.			
THE FGD SYSTEM WAS DOWN IN JULY AND AUGUST FOR REPLACEMENT OF GRAVITY FLOW LINE WITH AN OPEN FLUME.			
OCT. 75	2331	1848	79
THE FGD SYSTEM RESTARTED ON SEPTEMBER 8, AND OPERATED DURING THIS PERIOD AT AN AVAILABILITY FACTOR OF 80 PERCENT. THE FIGURES GIVEN FOR OCTOBER REPRESENT THE OPERATION HOURS FROM SEPTEMBER 8 TO NOVEMBER 9.			
DEC. 75	2135	1250	59
THE FGD SYSTEM OPERATED WELL DURING THE REPORT PERIOD EXCEPT FOR A SCHEDULED HOLIDAY SHUTDOWN FROM DECEMBER 23 TO JANUARY 4, 1976. BECAUSE OF PROBLEMS WITH SOLIDS AND SOLIDS CARRY-OVER, G.M. CONDUCTED STREAM TESTS DURING DECEMBER TO DETERMINE WHETHER THE CARRY-OVER OF SOLIDS WAS DUE TO A HIGH			

SECTION 9 (CONTINUED)

PERFORMANCE DESCRIPTION FOR OPERATIONAL FGD SYSTEMS ON INDUSTRIAL BOILERS

GENERAL MOTORS CORPORATION; PARMA, OHIO (CONTINUED)

MONTH	OPERATION HOURS BOILER	FGD SYSTEM	OPERABILITY (%)

SOLIDS RECIRCULATION RATE. THE FGD SYSTEM WAS DOWN MOST OF DECEMBER BECAUSE OF THESE TESTS, WHICH CAUSED THE LOW OPERABILITY FACTOR.

FEB. 76	2997	1196	40

G.M. HAS FOUND SOLIDS CONCENTRATION IN THE CLARIFIER TOO HIGH FOR EFFICIENT SYSTEM OPERATION. A.D. LITTLE WAS SCHEDULED TO CONDUCT TESTS ON THE SYSTEM IN APRIL AS PART OF AN EPA EVALUATION PROGRAM.

MAR. 76	1379	240	7
APR. 76	1084	847	78

THE LOW OPERABILITY INDEX DURING THE MONTH OF MARCH RESULTED FROM EXTENSIVE MODIFICATIONS PERFORMED ON THE SYSTEM BY G.M. DURING THIS PERIOD THE SCRUBBER BLOWDOWN AND SCRUBBER FLOW INDICATION SYSTEM WAS REVISED. FROM APRIL 19 TO THE END OF THE MONTH THE SYSTEM WAS OPERABLE 100%. DURING THIS PERIOD ALL SYSTEM MODIFICATIONS WERE COMPLETED AND ALL MAJOR PROBLEM AREAS CORRECTED.

MAY 76	1149	1042	91
JUN. 76	924	816	88

ONE SYSTEM UPSET OCCURRED DURING THE PERIOD DUE TO AN OPERATOR ERROR. BOILER HOURS WERE LOW IN JUNE BECAUSE OF LOW PROCESS DEMAND. THE SCRUBBING SYSTEM CHARACTERIZATION STUDY WAS CONCLUDED ON MAY 14.

JUL. 76	599	599	100
AUG. 76	715	715	100

THE BOILER LOAD DEMAND WAS VERY LIGHT DURING THE REPORT MONTHS, REQUIRING ONLY ONE BOILER BEING CONTINUOUSLY ON LINE. THE SYSTEM WAS DOWN FOR A ONE-WEEK PERIOD BECAUSE OF THE ANNUAL PLANT INVENTORY. MODIFICATIONS TO THE OPERATION OF THE OF THE GAS SCRUBBING SYSTEM HAVE INCLUDED:

ELIMINATION OF POLYMERIC ADDITION.

ELIMINATION OF SLUDGE BLANKET FOR FILTRATION.

HIGH PERCENT SULFATE CONCENTRATION IN THE FILTER CAKE.

INCORPORATION OF PH CONTROLLER IN THE CHEMICAL MIX TANK REGULATING THE LIME FEED INTO SYSTEM. PH CONTROL SHOULD REDUCE THE STOICHIOMETRIC REQUIREMENTS FROM THE 1.25-1.50 RANGE DOWN TO 1.10-1.20.

SEP. 76	809	223	40
OCT. 76	1174	734	63

TWO BOILERS AND THEIR CORRESPONDING SCRUBBER MODULES WERE IN SERVICE DURING THE MONTH. OPERATION TIME WAS LODGED PRIMARILY IN THE INITIAL PART OF THE MONTH. A NUMBER OF PROBLEMS WERE ENCOUNTERED, FORCING A SHUTDOWN THROUGHOUT THE REMAINDER OF THE MONTH. THESE INCLUDED:

SOLIDS DEPOSITION AND PLUGGING OF THE CHEMICAL TANKS AND REACTORS, REQUIRING SHUTDOWN AND CLEANOUT.

SECTION 9 (CONTINUED)

PERFORMANCE DESCRIPTION FOR OPERATIONAL FGD SYSTEMS ON INDUSTRIAL BOILERS

GENERAL MOTORS CORPORATION; PARMA, OHIO (CONTINUED)

MONTH	OPERATION HOURS BOILER	FGD SYSTEM	OPERABILITY (%)

REPLACEMENT OF DEMISTER PADS.

AGITATOR PROBLEMS.

THE SYSTEM WAS RETURNED TO SERVICE THE SECOND WEEK IN OCTOBER. TWO BOILERS AND THEIR CORRESPONDING SCRUBBERS WERE PUT BACK IN THE GAS STREAM. PROBLEMS ENCOUNTERED STEMMED PRIMARILY FROM A MECHANICAL COLLECTOR MALFUNCTIONING RESULTING IN EXCESSIVE PARTICULATE LOADING IN THE MODULES AND EVENTUALLY CAUSING WIDESPREAD PLUGGING OF HE LOWER BUBBLE-CAPE TRAYS. SHUTDOWN AND CLEANOUT OF MODULES PLUS REPAIRS TO THE MECHANICAL COLLECTOR WERE REQUIRED. SYSTEM RESTART OCCURRED NOVEMBER 8.

MAJOR MODIFICATIONS PERFORMED TO THE DOUBLE ALKALI SYSTEM DURING THE PERIOD INCLUDED THE INSTALLATION OF A GREAT LAKES PH MONITOR AND CONTROL UNIT FOR THE REGULATION OF LIME FEED TO THE REGENERATION REACTOR-CLARIFIER UNIT. THIS UNIT EMPLOYS A DIGITAL READOUT AND WAS SCHEDULED FOR OPERATION SOMETIME IN NOVEMBER. SUPERIOR CRYSTAL GROWTH OF THE CALCIUM SULFITE/SULFATE SALTS RESULTED BY RUNNING A SEEDING LINE BACK TO THE REACTOR-CLARIFIER UNIT.

NOV. 76	1321	787	60
DEC. 76	1559	349	22

DURING THE LATTER PART OF NOVEMBER AND EARLY DECEMBER, THE SCRUBBERS WERE TAKEN OUT OF THE FLUE GAS PATH BECAUSE OF CONTINUED SOLIDS BUILDUP IN THE MIX TANK. IN ADDITION, SOME PIPING ARRANGEMENTS WERE MODIFIED AND THE GEAR REDUCER IN THE MIX TANK HAD TO BE REPLACED. THE FGD FIGURES REPORTED FOR THE MONTH OF DECEMBER ARE NOT FULLY REPRESENTATIVE BECAUSE IT IS PART OF THE LOCAL UAW CONTRACT THAT ONLY UAW PERSONNEL CAN OPERATE THE FGD SYSTEM AND THEREFORE THE SCRUBBERS COULD NOT BE OPERATED.

JAN. 77	1852	608	33
FEB. 77	1462	892	61

THERE WAS A FAILURE OF THE AGITATORS AT THE MIX TANKS. THEY WERE LATER REPLACED WITH NEW ONES. THE PLANT WAS SHUTDOWN FOR SOME PERIOD DUE TO CUTBACK OF NATURAL GAS SUPPLY AND REQUEST TO CURTAIL ELECTRICAL CONSUMPTION.

APR. 77	1300	1158	89
MAY 77	1222	1118	92

BOILER HOURS WERE LOW DUE TO LOWER LOAD IN SUMMER.

JUN. 77	1180	1103	94
JUL. 77	702	276	39

THE FGD SYSTEM GAVE A VERY HIGH OPERABILITY FOR JUNE. THE FGD SYSTEM WAS DOWN FOR A CONSIDERABLE PORTION OF JULY. THE CHEMICAL MIX TANK BLEED OFF LINES AND OTHER PIPING HAD TO BE CLEANED OF SEDIMENTED SOLIDS.

AUG. 77	755	678	90
SEP. 77	764	480	71

SECTION 9 (CONTINUED)

PERFORMANCE DESCRIPTION FOR OPERATIONAL FGD SYSTEMS ON INDUSTRIAL BOILERS

GENERAL MOTORS CORPORATION; PARMA, OHIO (CONTINUED)

MONTH	OPERATION HOURS BOILER	FGD SYSTEM	OPERABILITY (%)

DURING THIS LOW-LOAD PERIOD THE LIME FEED PUMP AND LIME FEED LINES WERE CLEANED. GENERALLY, EVERY SUMMER AN ANNUAL FGD OVERHAUL IS CARRIED OUT.

OCT. 77	1277	398	31
NOV. 77	1380	920	67
DEC. 77	1790	968	54

THE CHEMICAL MIX TANK AGITATORS WERE TOTALLY REDESIGNED AND REPLACED BY HIGH-CARBON STEEL, PROPELLER TYPES. THE BLADES WERE SPECIFICALLY DESIGNED TO INCREASE THE FLOW THROUGH THE PROPELLERS, THUS INCREASING THE INTENSITY OF MIXING. DUE TO THANKSGIVING HOLIDAYS IN NOVEMBER AND CHRISTMAS AND NEW YEAR HOLIDAYS IN DECEMBER, THE FGD SYSTEM HAD LOWER OPERATION HOURS. SOME OF THE BOILERS HAD TO BE RUN FOR BUILDING MAINTENANCE.

1ST QUARTER-1978 THE BOILERS OPERATRED FOR 3370 HOURS WHEREAS THE FGD OPERATED FOR 70 HOURS. THE OPERABILITY INDEX WAS THEREFORE 1.25%. THE RAKE SHAFT IN THE THICKENER WAS BROKEN IN EARLY JANUARY. THERE WAS A CONSIDERABLE DELAY IN RECEIVING REPLACEMENT PARTS. IN ADDITION, SEVERE WINTER (BLIZZARD, HEAVY SNOW) MADE IT IMPOSSIBLE TO DO ANY REPAIRS.

2ND QUARTER-1978 THE FGD SYSTEM OPERATED FOR 2669 HOURS, AND THE BOILERS OPERATED FOR 3414 HOURS. THE OVERALL OPERABILITY WAS 78.2 PERCENT. IN APRIL, THE PIPELINES WERE FLUSHED AND CHEMICAL TANKS WERE CLEANED ALONGWITH SCRUBBER INTERNALS, STACKS AND MIST ELIMINATORS. IN JUNE, THE AVAILABILITY WAS 100 PERCENT. DURING THE SUMMER QUARTER, USUALLY A LOW-LOAD PERIOD, SEVERAL MODIFICATIONS WILL BE INCORPORATED. NEW VACUUM PUMPS AND FILTERS WILL BE INSTALLED, AND THE LIME SLURRY FEED PUMPS WILL BE REPLACED BY DIAPHRAGM PUMPS TO AVOID PLUGGING OF CONTROL VALVES. THE NEW FILTER CLOTH, MADE OF POLYPROPYLYNE, HAS GIVEN MUCH LONGER LIFE (ABOUT 3 MONTHS) THAN THE OLD ONE, MADE OF NYLON.

SECTION 9 (CONTINUED)

PERFORMANCE DESCRIPTION FOR OPERATIONAL FGD SYSTEMS ON INDUSTRIAL BOILERS

INSTALLATION NAME	GENERAL MOTORS CORPORATION
INSTALLATION LOCATION	PONTIAC, MICHIGAN
SOURCE CHARACTERISTICS	COAL (0.84% SULFUR)
	ALSO WOOD, PAPER, AND CARDBOARD.
SOURCE RATING	107,300 SCFM (TOTAL - 2 BOILERS)
	350,000 LB/HR STEAM (TOTAL - 2 BOILERS).
	LB/HR STEAM (TOTAL - 2 BOILERS)
NUMBER OF SEPARATE FGD UNITS	2
SOURCE CAPACITY	40 MW (EQUIVALENT); TOTAL - 2 BOILERS
CONTROL SYSTEM VENDOR	PEABODY ENGINEERING
CONTROL PROCESS	SODIUM HYDROXIDE SCRUBBING
NEW / RETROFIT	NEW
START-UP DATE	APRIL, 1976
	SYSTEM OPERATED TWO MONTHS IN EARLY 1973.
CONTROL SYSTEM STATUS	OPERATIONAL
SO2 EFFICIENCY	NOT DETERMINED
PARTICULATE EFFICIENCY	85%
WATER MAKE-UP	OPEN LOOP; 50 GPM
SLUDGE OR BY-PRODUCT DISPOSAL	DEWATERED SLURRY TO LANDFILL
	5% SOLIDS SLURRY DEWATERED AND TO LANDFILL
CONTROL SYSTEM COST	CAPITAL: $600,000 (1972). THIS IS THE TOTAL INSTALLED COST.

BACKGROUND INFORMATION

THE GENERAL MOTORS TRUCKS AND COACH PLANT LOCATED AT PONTIC, MICHIGAN OPERATES TWO BOILERS TO GENERATE STEAM FOR PROCESS REQUIREMENTS. BOILER NO. 6, INSTALLED IN 1972 BY ERIE CITY, IS RATED AT 188 MM BTU/HR OR 150,000 LBS/HR OF STEAM. BOILER NO. 8, INSTALLED IN 1972 BY RILEY, IS RATED AT 250 MM BTU/HR OR200,000 LBS/HR OF STEAM. THE FUEL USED IS COAL(0.84 % SULFUR), AND SOLID REFUSE(PAPER AND CARDBOARD). THE PARTICULATE EMISSIONS ARE CONTROLLED BY MECHANICAL COLLECTORS SUPPLIED BY ZURN INDUSTRIES, DESIGNED TO OPERATE AT 93 % EFFICIENC Y, WITH A PRESSURE DROP OF ABOUT 3 IN. WG.

PEABODY ENGINEERING SUPPLIED TWO WET SCRUBBERS IN APRIL 1976, PRIMARILY FOR ADDITIONAL PARTICULATE CONTROL. EACH SCRUBBER(12 FEET DIA.X 21.5 FEET HIGH) CONTAINS 3 IMPINGEMENT TRAYS AND OPERATES WITH A L/G OF 5 GAL/1000 ACF . THE SCRUBBER EFFLUENT IS MIXED WITH CAUSTIC AND MAKEUP WATER IN A HOLD TANK, AND PUMPED TO A CLARIFIER. THE OVERFLOW IS RECYCLED TO THE SCRUBBER, THUS SIGNIFICANT SO2 CONTROL IS ACHIEVED. THE UNDERFLOW IS SENT TO A WASTE TREATMENT PLANT, WHERE THE FLYASH IS REMOVED AND LANDFILLED. THE EFFLUENT DISCHARGE FROM THE WASTE TREATMENT PLANT IS 10-25 GPM.

SECTION 9 (CONTINUED)

PERFORMANCE DESCRIPTION FOR OPERATIONAL FGD SYSTEMS ON INDUSTRIAL BOILERS

GENERAL MOTORS CORPORATION; PONTIAC, MICHIGAN (CONTINUED)

THE SCRUBBERS, TRAYS, AND MIST ELIMINATORS(RADIAL VANE TYPE) ARE ALL MADE OF 316L SS.

OPERATING HISTORY

2ND QUARTER-1976 UNSTABLE PH CONTROL AND WEAR OF MECHANICAL EQUIPEMENT HANDLING THE FLYASH SLURRY WERE MAJOR STARTUP PROBLEMS.

3RD QUARTER-1977 AN AVAILABILITY OF 100 PERCENT HAD BEEN REPORTED WHEN BURNING A MIXTURE OF COAL AND REFUSE. THE SCRUBBER DISCHARGE SLURRY CAUSED WEAR DUE TO ITS FLYASH CONTENT.

4TH QUARTER-1977 FLYASH ABRASION IN THE PUMPS AND PIPING CONTINUED TO BE THE PROBLEM.

1ST QUARTER-1978 FLYASH CAUSED SERIOUS EROSION OF LIQUID HANDLING EQUIPMENT.

2ND QUARTER-1978 IT WAS DECIDED TO INSTALL PRESSURE FILTERS IN THE SCRUBBER EFFLUENT LINES TO REMOVE FLYASH.

SECTION 9 (CONTINUED)

PERFORMANCE DESCRIPTION FOR OPERATIONAL FGD SYSTEMS ON INDUSTRIAL BOILERS

INSTALLATION NAME	GENERAL MOTORS CORPORATION
INSTALLATION LOCATION	ST. LOUIS, MISSOURI
SOURCE CHARACTERISTICS	COAL (3.2% SULFUR)
SOURCE RATING	64,000 SCFM (TOTAL - 2 BOILERS)
NUMBER OF SEPARATE FGD UNITS	2
SOURCE CAPACITY	30 MW (TOTAL - 2 BOILERS)
CONTROL SYSTEM VENDOR	A.D. LITTLE
CONTROL PROCESS	SODIUM HYDROXIDE SCRUBBING
NEW / RETROFIT	RETROFIT
START-UP DATE	1972
CONTROL SYSTEM STATUS	OPERATIONAL
SO2 EFFICIENCY	90+% (2000 PPM @ INLET)
PARTICULATE EFFICIENCY	REMOVED BY PRECEDING CYCLONE AND ESP
WATER MAKE-UP	OPEN LOOP
SLUDGE OR BY-PRODUCT DISPOSAL	WASTEWATER TREATMENT AND DISCHARGE TO CITY SEWER NA2SO3 OXIDIZED TO NA2SO4, PH NEUTRALIZED AND DISCHARGED TO CITY SEWER SYSTEM
CONTROL SYSTEM COST	CAPITAL: $773,000 (1973). OPERATING: $172,000/YR (1976). THIS INCLUDES MAINTENANCE MATERIALS AND LABOR, AND ELECTRICITY.

BACKGROUND INFORMATION

THE GENERAL MOTORS CORPORATION PLANT LOCATED IN ST. LOUIS, MISSOURI OPERATES 4 COAL-FIRED BOILERS. TWO BOILERS, WHICH ARE RATED AT A TOTAL OF 25 MW (EQUIVALENT) AND HAVE A TOTAL STEAM GENERATION CAPACITY OF 250,000 LB/HR, ARE EQUIPPED WITH SCRUBBERS. COAL COMPOSITION IS TYPICALLY 3.2% SULFUR AND 10% ASH. SULFUR DIOXIDE CONCENTRATION IS APPROXIMATELY 2100 PPM AT THE INLET TO EACH SCRUBBER. CYCLONES AND ESP'S ARE USED FOR PARTICULATE REMOVAL PRIOR TO SO2 REMOVAL IN A 3-STAGE IMPINGEMENT TOWER WITH A CHEVRON MIST ELIMINATOR. DIRECT REHEAT IS ACCOMPLISHED WITH STEAM COILS

THE FGD SYSTEM IS CONSTRUCTED OF 316L STAINLESS STEEL.

OPERATING HISTORY

3RD QUARTER-1977	AN OPERABILITY OF 100% WAS REPORTED DURING THE MAY-AUGUST PERIOD.
4TH QUARTER-1977	IN SPITE OF A CHEVRON DEMISTER AND 60 F REHEAT, THE STACK LINER WAS CORRODED.
1ST QUARTER-1978	THE DUCTWORK DOWNSTREAM OF THE SCRUBBERS DEVELOPED SOME LEAKS.
2ND QUARTER-1978	A HORIZONTAL PORTION OF THE DOWNSTREAM DUCTWORK, ABOUT 15-20 FEET IN LENGTH, WILL BE REDESIGNED TO AVOID STAGNATION OF EXHAUST GASES

SECTION 9 (CONTINUED)

PERFORMANCE DESCRIPTION FOR OPERATIONAL FGD SYSTEMS ON INDUSTRIAL BOILERS

INSTALLATION NAME	GENERAL MOTORS CORPORATION
INSTALLATION LOCATION	TONOWANDA, NEW YORK
SOURCE CHARACTERISTICS	COAL (1.2% SULFUR)
SOURCE RATING	92,000 SCFM (TOTAL - 4 BOILERS)
	36,000 ACFM @ 406 F, FOR EACH OF 3 FGD SYSTEMS
	39,600 ACFM @ 350 F, FOR 1 FGD SYSTEM
	340,000 LB/HR STEAM (TOTAL - 4 BOILERS)
NUMBER OF SEPARATE FGD UNITS	4
SOURCE CAPACITY	65 MW (EQUIVALENT); TOTAL - 4 BOILERS
CONTROL SYSTEM VENDOR	FMC ENVIRONMENTAL EQUIPMENT
CONTROL PROCESS	SODIUM HYDROXIDE SCRUBBING
NEW / RETROFIT	RETROFIT
START-UP DATE	JUNE, 1975
CONTROL SYSTEM STATUS	OPERATIONAL
SO2 EFFICIENCY	90%-95% (1,000 PPM @ INLET)
PARTICULATE EFFICIENCY	90% (1.0 LB/MM BTU AT INLET)
WATER MAKE-UP	OPEN LOOP
SLUDGE OR BY-PRODUCT DISPOSAL	DEWATERED SLURRY TO LANDFILL
	FLY ASH AND NA2SO3/SO4 WASTE LIQUOR DEWATERED AND THEN TO SANITARY LANDFILL
CONTROL SYSTEM COST	CAPITAL: $2,200,000 (1974)

BACKGROUND INFORMATION

THE CHEVROLET DIVISION OF GENERAL MOTORS HAS A MOTOR PRODUCTION PLANT AT TONAWANDA, NEW YORK. THERE ARE 4 COAL-FIRED BOILERS AT THE FACILITY WHICH BURN 1.16 PERCENT SULFUR COAL WITH A HEATING VALUE OF 12,650 BTU/LB. THE TOTAL COAL FEED RATE IS 17 TONS/HR WHICH IS EQUIVALENT TO 412 MM BTU/HR OF HEAT INPUT OR 340,000 LBS/HR OF STEAM. THE BOILERS ARE RATED AT A TOTAL OF 32 MW.

ONE SCRUBBER HANDLES 39,000 ACFM AT 350 F WHEREAS EACH OF THE OTHER THREE 36,000 ACFM AT 406 F. THERE IS A CYCLONE BEFORE AND AFTER SCRUBBER FOR DUST COLLECTION AND MIST REMOVAL PURPOSES, RESPECTIVELY. THE VARIABLE THROAT VENTURI SCRUBBERS WERE SUPPLIED BY FMC CORP. THE PH OF RECYCLE SCRUBBER LIQUOR IS CONTROLLED AT 7.0 AND A L/G RATIO OF 20 GALLONS/1000 ACF IS USED. PRESSURE DROP ACROSS EACH SCRUBBER IS 10 IN. WG. CAUSTIC SODA IS ADDED TO THE SPENT LIQUOR IN A SEPARATE RECYCLE TANK. THE BLEED OFF RATE FROM THE RECYCLE TANK VARIES FROM 25 - 100 GPM. THE DISCHARGE CONTAINS FLYASH AND SODIUM SULFATE. THE FLYASH IS CONTROLLED AT LESS THAN 1% SUSPENDED SOLIDS. THE EFFLUENT IS DISCHARGED TO THE WASTE TREATMENT PLANT AFTER AERATION. THE AVERAGE INLET CONCENTRATIONS ARE 0.85 LB/MM BTU OF SO2 AND 1 LB/MM BTU OF PARTICULATE. THE EFFICIENCY OF SO2 REMOVAL IS 90% WHEREAS THAT OF PARTICULATE REMOVAL IS 80%-95%.

SECTION 9 (CONTINUED)

PERFORMANCE DESCRIPTION FOR OPERATIONAL FGD SYSTEMS ON INDUSTRIAL BOILERS

GENERAL MOTORS CORPORATION; TONOWANDA, NEW YORK (CONTINUED)

EACH SCRUBBER AND THE CYCLONIC DEMISTER IS MADE OF 316L SS. PLUME REHEAT IS NOT INCORPORATED IN THE SYSTEM. THE ENERGY REQUIREMENTS FOR THE SYSTEM ARE ABOUT 3 - 5 % OF THE FUEL BURNED.

OPERATING HISTORY

3RD QUARTER-1977 AVERAGE OPERABILITY DURING THIS PERIOD WAS REPORTED TO BE 100%.

4TH QUARTER-1977 MAJOR PROBLEMS HAVE BEEN PH CONTROL AND RECYCLE PIPE EROSION. CONTROL SENSORS/MODULATING MIXER VALVE REPLACED FOR PH CONTROL AND CAST IRON PIPE WAS USED TO REPLACE SS RECYCLE PIPING. DURING NOV - DEC CONDENSATION FOLLOWING THE DEMISTER HAS CORRODED THE STACK LINING. A DECISION HAS BEEN MADE TO RELINE THE STACK.

1ST QUARTER-1978 THE STACK WAS NOT RELINED.

2ND QUARTER-1978 ONE MORE CYCLONE WILL BE RETROFITTED AFTER EACH BOILER IN ORDER TO REDUCE THE PARTICULATE LOADING TO THE SCRUBBERS.

SECTION 9 (CONTINUED)

PERFORMANCE DESCRIPTION FOR OPERATIONAL FGD SYSTEMS ON INDUSTRIAL BOILERS

INSTALLATION NAME	GEORGIA-PACIFIC PAPER CO.
INSTALLATION LOCATION	CROSSETT, ARKANSAS
SOURCE CHARACTERISTICS	BARK AND OIL OR COAL (1% - 1.5% SULFUR)
SOURCE RATING	220,000 SCFM (1 BOILER)
NUMBER OF SEPARATE FGD UNITS	1
SOURCE CAPACITY	100 MW (EQUIVALENT); 1 BOILER
CONTROL SYSTEM VENDOR	AIRPOL INDUSTRIES
CONTROL PROCESS	CAUSTIC WASTE STREAM
NEW / RETROFIT	NEW
START-UP DATE	1975
CONTROL SYSTEM STATUS	OPERATIONAL
SO2 EFFICIENCY	85% - 90% (500 PPM @ INLET)
PARTICULATE EFFICIENCY	90% (0.5 GR/SCF AT INLET)
WATER MAKE-UP	OPEN LOOP; SCRUBBED WITH 2,300 GPM "BLACK WATER" FROM PULP MILL.
SLUDGE OR BY-PRODUCT DISPOSAL	WASTEWATER TREATMENT AND DISCHARGE TO CITY SEWER
CONTROL SYSTEM COST	CAPITAL: $275,000 (1974). THIS IS THE ABSORBER COST ONLY.

BACKGROUND INFORMATION

THE FGD SYSTEM AT GEORGIA-PACIFIC PAPER CO., CROSSETT, ARKANSAS REMOVES SO2 AND PARTICULATE FROM THE FLUE GAS GENERATED BY A BARK/OIL OR BARK/COAL BOILER (COAL: 1.0-1.5 % SULFUR). THE BOILER IS RATED AT 100 MW (EQUIVALENT) AND PRODUCES 950,000 LB/HR STEAM. THE SCRUBBER SYSTEM IS TREATING 320,000 ACFM AT 310 DEGREES F.

SO2 CONCENTRATION IN FLUE GAS IS 500 PPM WITH A PARTICULATE LOADING OF 0.5 GR/SCF. THE ABSORBER MODULE, DOWNSTREAM DUCTWORK, AND STACK ARE ALL FIBERGLASS-LINED. FLUE GAS CANNOT BE RE-HEATED. SCRUBBING LIQUOR PH IS MAINTAINED AT 7.5. BLEEDOFF STREAM IS NEUTRALIZED AND DISCHARGED TO CITY SEWERS AT 2000 GPM. REQUIRED SCRUBBER MAINTENANCE IS CARRIED OUT DURING SCHEDULED BOILER DOWN-TIME.

OPERATING HISTORY

3RD QUARTER-1977 PLANT REPORTED SATISFACTORY OPERATIONS WITH NO MAJOR PROBLEMS. THE FIBERGLASS LINING IN THE SCRUBBER FAILED FREQUENTLY AND WERE REPLACED AS THEY FAILED.

4TH QUARTER-1977 NO FIBERGLASS LINER FAILURE WAS DETECTED DURING THIS REPORT PERIOD.

2ND QUARTER-1978 PLANT REPORTED NO MAJOR PROBLEMS DURING THE FIRST SIX MONTHS OF 1978. TOTAL BOILER-SCRUBBER DOWNTIME SINCE JANUARY 1, WAS ABOUT 15 DAYS. THE PROBLEMS WERE THE LOSS OF A PUMP LINER AND A BOILER I.D. FAN TROUBLE.

SECTION 9 (CONTINUED)

PERFORMANCE DESCRIPTION FOR OPERATIONAL FGD SYSTEMS ON INDUSTRIAL BOILERS

INSTALLATION NAME	GETTY OIL COMPANY
INSTALLATION LOCATION	BAKERSFIELD, CALIFORNIA
SOURCE CHARACTERISTICS	COAL (1.1% SULFUR)
SOURCE RATING	72,000 SCFM (TOTAL - 6 BOILERS)
NUMBER OF SEPARATE FGD UNITS	1
SOURCE CAPACITY	30 MW (EQUIVALENT); 6 BOILERS, EACH @ 50 MM BTU/HR.
CONTROL SYSTEM VENDOR	FMC ENVIRONMENTAL EQUIPMENT
CONTROL PROCESS	SODIUM CARBONATE SCRUBBING
NEW / RETROFIT	RETROFIT
START-UP DATE	JUNE, 1977
CONTROL SYSTEM STATUS	OPERATIONAL
SO2 EFFICIENCY	90+% (600 PPM @ INLET)
SLUDGE OR BY-PRODUCT DISPOSAL	HOLDING POND FOR EVAPORATION 10 GPM BLEEDOFF TO A BLOWDOWN TANK. THE BLOWDOWN IS THEN SENT TO A DISPOSAL POND ONCE A WEEK.
CONTROL SYSTEM COST	CAPITAL: $400,000 (1977). THIS COST INCLUDES THE ABSORBER MODULE, SODA ASH TANK, PUMPS, AND PIPING. IT DOES NOT INCLUDE THE STACK, DUCTING, ENGINEERING, OR OVERHEADS. OPERATING: $390,000/YR (@ 340 DAYS/YR). THIS COST IS EQUIVALENT TO $0.16/MM BTU AND INCLUDES THE COST FOR SODA ASH, ELECTRICITY, AND SCRUBBER MAINTENANCE.

BACKGROUND INFORMATION

GETTY OIL COMPANY HAS AN OIL SITE NEAR BAKERSFIELD, CALIFORNIA WHICH OCCUPIES ABOUT 15 SQUARE MILES. THERE ARE 136 STEAM GENERATORS; 100 WITH A HEAT RATE OF 50 MM BTU/HR AND 36 WITH A HEAT RATE OF 20 MM BTU/HR. THE FUEL USED IS CRUDE OIL WITH 1.1% SULFUR AND A HEATING VALUE OF 6.4 MM BTU/BBL. STEAM IS DISTRIBUTED THROUGHOUT THE OIL FIELD BY INSULATED PIPELINES; AND INJECTED INTO THE OIL WELLS. CONDENSATION OF THE STEAM REDUCES THE VISCOSITY OF THE OIL, WHICH FLOWS FREELY TO THE SURFACE ALONG WITH THE WATER. THE OIL IS SEPARATED FROM WATER BY DECANTATION IN SETTLING TANKS, AND PURIFIED BY DISTILLATION IF REQUIRED.

THE FLUE GASES (130,000 ACFM @ 500 F) FROM SIX LARGE BOILERS (50 MM BTU/HR) ARE MANIFOLDED INTO A TRAY ABSORBER (13.5 FEET DIA X 35 FEET HIGH) WHICH WAS RETROFITTED IN JUNE 1977 BY FMC, ENVIRONMENTAL EQUIPMENT DIVISION. THE PROCESS USED IS SODIUM CARBONATE SCRUBBING. THE LIQUOR IS MAINTAINED AT A PH OF 6.8, AND RECIRCULATED WITH A L/G RATIO OF 6.4 GAL/1000 ACF. A BLEED STREAM OF 10 GPM IS CONTINUALLY SENT TO THE BLOWDOWN TANK; WHICH IS EMPTIED INTO THE DISPOSAL POND EVERY WEEK. THE INLET SO2 CONCENTRATION IS 600 PPM; THE OUTLET IS 60 PPM. THE ABSORBER, THEREFORE, HAS 90% SO2

SECTION 9 (CONTINUED)

PERFORMANCE DESCRIPTION FOR OPERATIONAL FGD SYSTEMS ON INDUSTRIAL BOILERS

GETTY OIL COMPANY; BAKERSFIELD, CALIFORNIA (CONTINUED)

REMOVAL EFFICIENCY. THE ABSORBER CONTAINS THREE DISC-AND-DONUT TRAYS AND AN INCONEL WIRE MESH DEMISTER.

THE ABSORBER MODULE AND THE STACK ARE MADE OF 316 L SS, WHEREAS THE DOWNSTREAM DUCTWORK AND THE RECIRCULATION PIPING ARE MILD STEEL. THE RECIRCULATION PUMP IS RUBBER LINED. THE CAPITAL COST FOR THE FGD SYSTEM WAS $400,000 IS 1977 DOLLARS, WHICH INCLUDES ALL THE EQUIPMENT BUT DOES NOT INCLUDE STACK DUCTING, OVERHEADS, AND ENGINEERING. THE OPERATING COSTS ARE $.16/MM BTU ($390,000/YR @ 340 DAYS/YR), WHICH INCLUDE ELECTRICAL, SCRUBBER MAINTENENCE, AND SODA ASH. THE STOICHIOMETRIC RATIO IS 1.61 LBS OF NA2CO3/LB SO2 REMOVED.

SOME IMPORTANT MAINTENANCE PRACTICES ARE:

1. DAILY CHECK AND CALIBRATION OF PH CONTROLLERS.
2. FREQUENT CHECKS ON FLOW WATERS (MAKEUP WATER, SODA ASH, RECIRCULATION LIQUOR, AND BLOWDOWN) AND FLUID LEVELS (BLOWDOWN TANK, SODA ASH TANK, AND SCRUBBER).
3. WEEKLY FILLING OF SODA ASH TANK AND DISPOSAL OF BLOWDOWN.
4. SCHEDULED LUBRICATION OF PUMPS AND FAN, SEAL REPLACEMENT.

OPERATING HISTORY

3RD QUARTER-1977 THE RECIRCULATION PUMP LINER WAS CHANGED FROM BUNA N TO NATURAL RUBBER, DUE TO THE SWELLING OF THE FORMER LINER. THE RUBBER PINCH VALVE ON RECIRCULATION PUMP WAS REPLACED BY SS GLOBE VALVE. THERE WERE SOME MINOR PROBLEMS WITH THE PH AND LEVEL CONTROLLERS.

4TH QUARTER-1977 THE FAN ROTOR WAS STRENGTHENED AND CLEANED OF THE SCALES. THE FAN BEARING BURNED UP. IT WAS REPLACED AND THE FAN WAS REALIGNED.

1ST QUARTER-1978 HIGH STACK DISCHARGE VELOCITY (60 FPS) CAUSED BY SMALL STACK DIAMETER; AND POOR LOCATION OF MIST ELIMINATOR (TOO CLOSE TO STACK TRANSITION SECTION) RESULTED IN HIGH ENTRAINMENT OF DROPLETS. THE STACK AND TOP SECTION OF THE SCRUBBER WERE REDESIGNED.

2ND QUARTER-1978 THE MESH DEMISTER WILL BE REPLACED BY A MONTERS CHEVERON TYPE MIST ELIMINATOR. A KOCH FLEXITRAY WILL BE INSTALLED ABOVE THE PRESENT 3RD TRAY IN ORDER TO IMPROVE SO2 REMOVAL EFFICIENCY, PARTICULARLY DURING TURNDOWN CONDITIONS. THE PH PROBES ARE FOULED FREQUENTLY. SEVERAL TYPE OF CONTROLLERS ARE PRESENTLY BEING TESTED FOR HIGH RELIABILITY. THE MILD STEEL RECIRCULATION LINES WERE ERODED, AND WILL BE REPLACED BY 316L SS. THE AIR BUBBLER IN SODA ASH TANK LEVEL CONTROLLER IS OFTEN PLUGGED. IT WILL BE REPLACED BY A DIAPHRAGM TYPE LEVEL CONTROL DEVICE. THE BLOWDOWN TANK OUTLET LINE HAS DEVELOPED SCALING. A POSITIVE DISPLACEMENT PUMP WILL BE INSTALLED IN THIS LINE, AND AN INHIBITOR MAY BE ADDED IN THE TANK LIQUOR.

SECTION 9 (CONTINUED)

PERFORMANCE DESCRIPTION FOR OPERATIONAL FGD SYSTEMS ON INDUSTRIAL BOILERS

INSTALLATION NAME	GREAT SOUTHERN PAPER CO.
INSTALLATION LOCATION	CEDAR SPRINGS, GEORGIA
SOURCE CHARACTERISTICS	BARK AND COAL OR OIL (1.0%-2.0% SULFUR)
SOURCE RATING	420,000 SCFM (TOTAL - 2 BOILERS)
NUMBER OF SEPARATE FGD UNITS	2
SOURCE CAPACITY	100 MW (EQUIVALENT); TOTAL - 2 BOILERS
CONTROL SYSTEM VENDOR	AIRPOL INDUSTRIES
CONTROL PROCESS	CAUSTIC WASTE STREAM
NEW / RETROFIT	RETROFIT
START-UP DATE	1975
CONTROL SYSTEM STATUS	OPERATIONAL
SO2 EFFICIENCY	85%-90% (1,000 PPM AT INLET)
PARTICULATE EFFICIENCY	99.1% (DESIGN: 4.5 GR/SCF AT INLET)
WATER MAKE-UP	OPEN LOOP; 350 - 400 GPM PER ABSORBER
SLUDGE OR BY-PRODUCT DISPOSAL	WASTEWATER TREATMENT AND DISCHARGE TO RIVER CLARIFICATION FOLLOWED BY PONDING AND DISCHARGE TO RIVER
CONTROL SYSTEM COST	CAPITAL: $600,000 (1974). THIS IS THE EQUIPMENT COST FOR THE TWO SCRUBBER MODULES.

BACKGROUND INFORMATION

THE FGD SYSTEM AT GREAT SOUTHERN PAPER AT CEDAR SPRINGS, GEORGIA CONSISTS OF TWO AIRPOL SODIUM SCRUBBING TRAINS CONTROLLING EMISSIONS FROM TWO COAL-FIRED BOILERS, EACH RATED AT 50 MW (EQUIVALENT) AND EACH PRODUCING 500,000 LB/HR STEAM. THE FUELS FIRED IN THE BOILERS TYPICALLY HAVE THE FOLLOWING SULFUR CONTENTS: COAL - 1.5% , OIL - 1.5%, AND BARK - 2.0%.

THE STAINLESS STEEL SCRUBBERS HANDLE A COMBINED TOTAL OF 700,000 ACFM AT 425 DEGREES F. THE PRESSURE DROP ACROSS A SCRUBBER IS APPROXIMATELY 7 INCHES W.G. WITH 85 TO 90% SULFUR DIOXIDE REMOVAL EFFICIENCY. THE SULFUR CONCENTRATION OF THE FLUE GAS IS 1000-1200 PPM AND-THE PARTICULATE LOADING IS 4.5 GR/SCFD.

THE SCRUBBER UNDERFLOW IS COMPOSED OF FLYASH AND SODIUM SULFITE/SULFATE SOLUTION. SOLIDS CONTENT (FLYASH) IS TYPICALLY 3 TO 5 % BY WEIGHT. SCRUBBER WASTE WATER WITH AN AVERAGE PH OF 4.5 IS PONDED AND CLARIFIED WATER IS RETURNED TO THE RIVER.

OPERATING HISTORY

4TH QUARTER-1977 THE EXPANSION JOINT BETWEEN THE EXISTING STACK AND SCRUBBER HAD TO BE REPLACED IN SEPTEMBER. SOME INTERNAL WEAR WAS DETECTED ON THE PUMPS DUE TO THE ASH CONTENT. EROSION AND PLUGGAGE PROBLEMS WITH THE PH PROBES HAVE BEEN ENCOUNTERED. THE PLANT WAS IN THE PROCESS OF CHANGING THE CONTROL PH AND MOVING THE PROBES. TANKS AND NECESSARY

SECTION 9 (CONTINUED)

PERFORMANCE DESCRIPTION FOR OPERATIONAL FGD SYSTEMS ON INDUSTRIAL BOILERS

GREAT SOUTHERN PAPER CO.; CEDAR SPRINGS, GEORGIA (CONTINUED)

EQUIPMENT TO CONTROL THE PROPER PH ARE EXPECTED TO BE COMPLETED IN A COUPLE OF MONTHS. SOME EROSION WAS DETECTED IN THE RECIRCULATION LINES OF THE POWER BOILER SCRUBBER. THE LINES AND SOME OF THE VALVES HAD TO BE REPLACED.

2ND QUARTER-1978 NO UPDATE INFORMATION WAS OBTAINED FOR THIS REPORT PERIOD.

SECTION 9 (CONTINUED)

PERFORMANCE DESCRIPTION FOR OPERATIONAL FGD SYSTEMS ON INDUSTRIAL BOILERS

INSTALLATION NAME	GREAT WESTERN SUGAR
INSTALLATION LOCATION	BILLINGS, MONTANA
SOURCE CHARACTERISTICS	COAL (0.7% SULFUR)
SOURCE RATING	60,000 SCFM @ 70 F
NUMBER OF SEPARATE FGD UNITS	3
CONTROL SYSTEM VENDOR	GREAT WESTERN SUGAR
CONTROL PROCESS	AMMONIA-LADEN PROCESS WATER
NEW / RETROFIT	RETROFIT
START-UP DATE	OCTOBER, 1977
CONTROL SYSTEM STATUS	OPERATIONAL
SO2 EFFICIENCY	55% (300-400 PPM @ INLET)
SLUDGE OR BY-PRODUCT DISPOSAL	WASTEWATER TREATMENT AND DISCHARGE TO RIVER

SECTION 9 (CONTINUED)

PERFORMANCE DESCRIPTION FOR OPERATIONAL FGD SYSTEMS ON INDUSTRIAL BOILERS

INSTALLATION NAME	GREAT WESTERN SUGAR
INSTALLATION LOCATION	FINDLAY, OHIO
SOURCE CHARACTERISTICS	COAL (1.2% SULFUR, AVERAGE)
SOURCE RATING	65,230 SCFM (TOTAL - 2 BOILERS)
	100,000 LBS/HR STEAM (TOTAL - 2 BOILERS)
NUMBER OF SEPARATE FGD UNITS	2
SOURCE CAPACITY	99 MM BTU/HR (TOTAL), 9.5MW (EQUIVALENT); TOTAL - 2 BOILERS
CONTROL SYSTEM VENDOR	GREAT WESTERN SUGAR
CONTROL PROCESS	SODIUM CARBONATE SCRUBBING
NEW / RETROFIT	RETROFIT
START-UP DATE	OCTOBER, 1974
CONTROL SYSTEM STATUS	OPERATIONAL
SO2 EFFICIENCY	76% (600 PPM @ INLET)
PARTICULATE EFFICIENCY	90%
SLUDGE OR BY-PRODUCT DISPOSAL	WASTEWATER TREATMENT AND DISCHARGE TO CITY SEWER
	BLEED-OFF STREAM TO HOLDING TANK
CONTROL SYSTEM COST	CAPITAL: $523,000 (1974). THIS IS THE TOTAL INSTALLED COST OF THE FGD SYSTEM.
	OPERATING: $30,200/YR. THIS INCLUDES ELECTRICITY, MAINTENENCE, LABOR, AND MATERIALS.

BACKGROUND INFORMATION

THE GREAT WESTERN SUGAR COMPANY HAS TWO COAL-FIRED BOILERS AT THE FINDLAY, OHIO PLANT. EACH BOILER IS RATED AT 50,000 LBS/HR OF STEAM; AND BURNS COAL WITH 1.2 PERCENT AVERAGE SULFUR, 9.2 PERCENT AVERAGE ASH, AND A HEATING VALUE OF 12,715 BTU/LB. THE SUGAR FACTORY IS OPERATIONAL ONLY 3 MONTHS OF EVERY YEAR, DURING THE FALL QUARTER.

THE FGD SYSTEM WAS RETROFITTED IN OCT. 1974 AS A PROPRIETARY DESIGN PRIMARILY FOR PARTICULATE CONTROL. THE FLUE GASES FROM TWO BOILERS (120,000 ACFM @ 515 F) PASS THROUGH MULTICLONES, AND THEN ARE SENT THROUGH A VENTURI SCRUBBER, WHICH OPERATES WITH A PRESSURE DROP OF 7 IN. OF WG AND L/G VALUE OF 7 GAL/1000 ACF. THE GAS VELOCITY AT THE VENTURI INLET IS 44 FPS. THE SCRUBBER IS FOLLOWED BY A DEMISTER VESSEL WHICH CONTAINS A SINGLE PASS, THREE-STAGE CHEVRON DEMISTER. WASH WATER FLOW TO THE DEMISTER IS 120 GPM, WITH A FREQUENCY OF 15 MINUTES EVERY 8 HOURS. THE PRESSURE DROP ACROSS THE DEMISTER IS .5 IN. WG. A CONSTANT BLEED-OFF STREAM OF 300 GPM IS SENT TO A POND. A PART OF THIS POND IS REUSED AS MAKEUP WATER TO THE SCRUBBER, WHILE THE BALANCE OVERFLOWS INTO ANOTHER HOLDING POND.

THE VENTURI SCRUBBER, THE PLUG, DEMISTER VESSEL, AND THE DEMISTER ARE ALL MADE OF 316L SS.

SECTION 9 (CONTINUED)

PERFORMANCE DESCRIPTION FOR OPERATIONAL FGD SYSTEMS ON INDUSTRIAL BOILERS

INSTALLATION NAME	GREAT WESTERN SUGAR
INSTALLATION LOCATION	FORT MORGAN, COLORADO
SOURCE CHARACTERISTICS	COAL (1.2% SULFUR, AVERAGE)
SOURCE RATING	65,230 SCFM (TOTAL - 2 BOILERS)
	100,000 ACFM EACH @ 400 F (TOTAL - 2 BOILERS)
	250,000 LBS/HR STEAM (TOTAL - 2 BOILERS)
NUMBER OF SEPARATE FGD UNITS	2
SOURCE CAPACITY	326 MM BTU/HR, 31 MW (EQUIVALENT); TOTAL - 2 BOILERS
CONTROL SYSTEM VENDOR	GREAT WESTERN SUGAR
CONTROL PROCESS	AMMONIA-LADEN PROCESS WATER
NEW / RETROFIT	RETROFIT
START-UP DATE	OCTOBER, 1976
CONTROL SYSTEM STATUS	OPERATIONAL
SO2 EFFICIENCY	48% (300-400 PPM @ INLET)
PARTICULATE EFFICIENCY	95% (750 LBS/HR @ INLET)
SLUDGE OR BY-PRODUCT DISPOSAL	WASTEWATER TREATMENT AND DISCHARGE TO RIVER
CONTROL SYSTEM COST	CAPITAL: $707,000 (1976). THIS IS TOTAL INSTALLED COST OF THE FGD SYSTEM.
	OPERATING: $88,200/YR THIS INCLUDES ELECTRICITY, STEAM, MAINTENENCE, LABOR, AND MATERIALS.

BACKGROUND INFORMATION

THE GREAT WESTERN SUGAR COMPANY HAS TWO COAL FIRED BOILERS AT THEIR FORT MORGAN, COLORADO PLANT. EACH BOILER IS RATED AT 125,000 LBS/HR OF STEAM; AND BURNS COAL WITH 0.54 PERCENT AVERAGE SULFUR, 8.7 PERCENT AVERAGE ASH, AND AN AVERAGE HEATING VALUE OF 10,176 BTU/LB. THE SUGAR FACTORY IS OPERATIONAL ONLY 3 MONTHS OF EVERY YEAR, DURING THE FALL QUATER.

THE FGD SYSTEM WAS RETROFITTED IN OCT. '76 AS A PROPRIETARY DESIGN PRIMARILY FOR PARTICULATE CONTROL. THE FLUE GASES FROM EACH BOILER (100,000 ACFM @ 400 F) PASS THROUGH MULTICLONES, AND THEN ARE SENT THROUGH A VENTURI SCRUBBER, WHICH OPERATES WITH A PRESSURE DROP OF 6 IN. OF WG AND L/G VALUE OF 8 GAL/1000 ACF. THE SCRUBBERS ARE FOLLOWED BY A COMMON VESSEL WHICH CONTAINS A SINGLE-PASS, THREE STAGE CHEVERON DEMISTER. WASH WATER FLOW TO THE DEMISTER IS 120 GPM, WITH A FREQUENCY OF 15 MINUTES EVERY 8 HOURS. THE PRESSURE DROP ACROSS DEMISTER IS 0.5 IN. OF WG. A CONSTANT BLEED-OFF STREAM OF 600 GPM FROM EACH SCRUBBER IS SENT TO A POND, WHICH OVERFLOWS INTO ANOTHER HOLDING POND.

THE VENTURI SCRUBBER, THE PLUG, DEMISTER VESSEL, AND THE DEMISTER ARE ALL MADE OF 316L SS.

SECTION 9 (CONTINUED)

PERFORMANCE DESCRIPTION FOR OPERATIONAL FGD SYSTEMS ON INDUSTRIAL BOILERS

INSTALLATION NAME	GREAT WESTERN SUGAR
INSTALLATION LOCATION	GERING, NEBRASKA
SOURCE CHARACTERISTICS	COAL (1.2% SULFUR, AVERAGE)
SOURCE RATING	110,000 SCFM (TOTAL - 2 BOILERS)
	97,000 ACFM EACH @ 450 F (TOTAL - 2 BOILERS)
	205,000 LBS/HR STEAM (TOTAL - 2 BOILERS)
NUMBER OF SEPARATE FGD UNITS	2
SOURCE CAPACITY	20.5 MW (TOTAL 1 - 15, 1 - 5.5 BOILER)
	218 MM BTU/HR (TOTAL), 21 MW (EQUIVALENT); TOTAL - 2 BOILERS
CONTROL SYSTEM VENDOR	GREAT WESTERN SUGAR
CONTROL PROCESS	AMMONIA-LADEN PROCESS WATER
NEW / RETROFIT	RETROFIT
START-UP DATE	OCTOBER, 1975
CONTROL SYSTEM STATUS	OPERATIONAL
SO2 EFFICIENCY	70% (600 PPM @ INLET)
SLUDGE OR BY-PRODUCT DISPOSAL	WASTEWATER TREATMENT AND DISCHARGE TO RIVER
	EFFLUENT TO HOLDING POND
CONTROL SYSTEM COST	CAPITAL: $643,000 (1975). THIS IS TOTAL INSTALLED COST OF THE FGD SYSTEM.
	OPERATING: $34,600/YR THIS INCLUDES ELECTRICITY, MAINTENENCE, LABOR, AND MATERIALS.

BACKGROUND INFORMATION

THE GREAT WESTERN SUGAR COMPANY HAS TWO COAL FIRED BOILERS AT THEIR GERING, NEBRASKA PLANT. BOILER #1 IS RATED AT 150,000 LBS/HR OF STEAM AND WAS SUPPLIED BY ERIE CITY IN 1965, WHEREAS BOILER #2 IS RATED AT 55,000 LB/HR OF STEAM AND WAS SUPPLIED BY ERIE CITY IN 1954. THE COAL HAS 0.73 PERCENT AVERAGE SULFUR, 8.5 PERCENT AVERAGE ASH, AND AN AVERAGE HEATING VALUE OF 10,180 BTU/LB. THE SUGAR FACTORY IS OPERATIONAL ONLY 3 MONTHS OF EVERY YEAR, DURING THE FALL QUARTER.

THE FGD SYSTEM WAS RETROFITTED IN OCT. '75 AS A PROPRIETARY DESIGN PRIMARILY FOR PARTICULATE CONTROL. THE FLUE GASES FROM TWO BOILERS (105,000 ACFM @ 310 F) PASS THROUGH CYCLONES, ARE MIXED IN A COMMON DUCT, AND THEN SENT THROUGH TWO VENTURI SCRUBBERS (EACH HEATING 97,000 ACFM @ 450 F), WHICH OPERATE WITH A PRESSURE DROP OF 6 IN. OF WG AND L/G VALUE OF 6.2 GAL/ACF. THE OPERATING GAS VELOCITY AT THE VENTURI INLET IS 43 FPS. THE SCRUBBERS ARE FOLLOWED BY A DEMISTER VESSEL WHICH CONTAINS A SINGLE PASS, THREE STAGE CHEVRON DEMISTER. WASH WATER FLOW TO THE DEMISTER IS 150 GPM, WITH A FREQUENCY OF 15 MINUTES EVER 8 HOURS. THE PRESSURE DROP ACROSS DEMISTER IS 0.5 IN. OF WG.

SECTION 9 (CONTINUED)

PERFORMANCE DESCRIPTION FOR OPERATIONAL FGD SYSTEMS ON INDUSTRIAL BOILERS

GREAT WESTERN SUGAR; GERING, NEBRASKA (CONTINUED)

THE SCRUBBER EFFLUENT, 700 GPM FROM EACH SCRUBBER IS SENT TO A POND.

THE VENTURI SCRUBBERS, VARIABLE DIAMETER PLUGS, DEMISTER VESSEL, AND THE DEMISTER ARE ALL MADE OF 304 L SS. THE TOTAL INSTALLED COST OF THE VENTURI SCRUBBER SYSTEM WAS $643,000 IN 1975 DOLLARS. THE OPERATING COST FOR THE SYSTEM IS $34,600 /YR.

SECTION 9 (CONTINUED)

PERFORMANCE DESCRIPTION FOR OPERATIONAL FGD SYSTEMS ON INDUSTRIAL BOILERS

INSTALLATION NAME	GREAT WESTERN SUGAR
INSTALLATION LOCATION	GREELEY, COLORADO
SOURCE CHARACTERISTICS	COAL (0.6% SULFUR)
SOURCE RATING	25,000 SCFM @ 70 F
NUMBER OF SEPARATE FGD UNITS	1
CONTROL SYSTEM VENDOR	GREAT WESTERN SUGAR
CONTROL PROCESS	AMMONIA-LADEN PROCESS WATER
NEW / RETROFIT	RETROFIT
START-UP DATE	OCTOBER, 1975
CONTROL SYSTEM STATUS	OPERATIONAL
SO2 EFFICIENCY	35% (300-400 PPM @ INLET)
SLUDGE OR BY-PRODUCT DISPOSAL	WASTEWATER TREATMENT AND DISCHARGE TO RIVER

SECTION 9 (CONTINUED)

PERFORMANCE DESCRIPTION FOR OPERATIONAL FGD SYSTEMS ON INDUSTRIAL BOILERS

INSTALLATION NAME	GREAT WESTERN SUGAR
INSTALLATION LOCATION	LOVELAND, COLORADO
SOURCE CHARACTERISTICS	COAL (1.2% SULFUR, AVERAGE)
SOURCE RATING	121,800 SCFM (TOTAL - 2 BOILERS)
	100,000 ACFM EACH @ 410 F
	100,000 LBS/HR STEAM (TOTAL - 2 BOILERS)
NUMBER OF SEPARATE FGD UNITS	2
CONTROL SYSTEM VENDOR	GREAT WESTERN SUGAR
CONTROL PROCESS	AMMONIA-LADEN PROCESS WATER
NEW / RETROFIT	RETROFIT
START-UP DATE	OCTOBER, 1973
CONTROL SYSTEM STATUS	OPERATIONAL
SO2 EFFICIENCY	30% (.95 LB/MM BTU @ INLET)
WATER MAKE-UP	800 GPM (PROCESS CONDENSATE WATER, PH=8.7, L/G=8)
SLUDGE OR BY-PRODUCT DISPOSAL	WASTEWATER TREATMENT AND DISCHARGE TO RIVER
	EFFLUENT STREAM TO HOLDING POND
CONTROL SYSTEM COST	TOTAL INSTALLED COST FOR THE TWO SCRUBBERS, NEW BREECHING,
	CAPITAL: $430,500 (1974). THIS IS TOTAL INSTALLED COST OF
	THE FGD SYSTEM, I.D. FANS, AND WATER SYSTEM (1972).
	THE FGD SYSTEM.
	OPERATING: $84,400/YR THIS INCLUDES ELECTRICITY, STEAM,
	MAINTENENCE, LABOR, AND MATERIALS.

BACKGROUND INFORMATION

THE GREAT WESTERN SUGAR COMPANY HAS TWO COAL FIRED BOILERS AT THEIR LOVELAND, COLORADO PLANT. EACH BOILER IS RATED AT 125,000 LBS/HR OF STEAM; AND BURNS COAL WITH 0.52 PERCENT AVERAGE SULFUR, 9.9 PERCENT AVERAGE ASH, AND AN AVERAGE HEATING VALUE OF 10,345 BTU/LB. THE SUGAR FACTORY IS OPERATIONAL ONLY 3 MONTHS OF EVERY YEAR, DURING THE FALL QUARTER.

THE FGD SYSTEM WAS RETROFITTED IN OCT. '74 AS A PROPRIETARY DESIGN PRIMARILY FOR PARTICULATE CONTROL. THE FLUE GASES FROM EACH BOILER (100,000 ACFM @ 410 F) PASS THROUGH CYCLONES AND ARE MIXED IN A COMMON DUCT, AND THEN SENT THROUGH TWO VENTURI SCRUBBERS, WHICH OPERATE WITH A PRESSURE DROP OF 7 IN. OF WG AND L/G VALUE OF 7.5 GAL/1000 ACF. THE OPERATING GAS VELOCITY AT THE VENTURI INLET IS 45 FPS. THE SCRUBBERS ARE FOLLOWED BY A DEMISTER VESSEL WHICH CONTAINS AN ONE-PASS, THREE STAGE CHEVERON DEMISTER. WASH WATER FLOW TO THE DEMISTER IS 120 GPM, WITH A FREQUENCY OF 15 MINUTES EVERY 8 HOURS. THE PRESSURE DROP ACROSS DEMISTER IS 0.5 IN. OF WG. THE EFFLUENT STREAM FROM EACH SCRUBBER, 750 GPM, IS SENT TO A POND, WHICH OVERFLOWS INTO ANOTHER HOLDING POND.

SECTION 9 (CONTINUED)

PERFORMANCE DESCRIPTION FOR OPERATIONAL FGD SYSTEMS ON INDUSTRIAL BOILERS

GREAT WESTERN SUGAR; LOVELAND, COLORADO (CONTINUED)

THE VENTURI SCRUBBERS, VARIABLE DIAMETER PLUGS, DEMISTER VESSEL, AND THE DEMISTER ARE ALL MADE OF 316 L SS. THE TOTAL INSTALLED COST OF THE VENTURI SCRUBBER SYSTEM WAS $430,500 IN 1974 DOLLARS. THE OPERATING COST FOR THE SYSTEM IS $84,400/YR.

SECTION 9 (CONTINUED)

PERFORMANCE DESCRIPTION FOR OPERATIONAL FGD SYSTEMS ON INDUSTRIAL BOILERS

INSTALLATION NAME	GREAT WESTERN SUGAR
INSTALLATION LOCATION	SCOTTS BLUFF, NEBRASKA
SOURCE CHARACTERISTICS	COAL (1.2% SULFUR, AVERAGE)
SOURCE RATING	65,230 SCFM (TOTAL - 2 BOILERS)
	130,000 ACFM EACH @ 400 F (TOTAL - 2 BOILERS)
	300,000 LBS/HR STEAM (TOTAL - 2 BOILERS)
NUMBER OF SEPARATE FGD UNITS	2
SOURCE CAPACITY	30 MW (TOTAL 2 - BOILERS)
	315 MM BTU/HR (TOTAL), 31 MW (EQUIVALENT); TOTAL - 2 BOILERS
CONTROL SYSTEM VENDOR	GREAT WESTERN SUGAR
CONTROL PROCESS	AMMONIA-LADEN PROCESS WATER
NEW / RETROFIT	RETROFIT
START-UP DATE	OCTOBER, 1975
CONTROL SYSTEM STATUS	OPERATIONAL
SO2 EFFICIENCY	35% (400 PPM @ INLET)
PARTICULATE EFFICIENCY	95%
SLUDGE OR BY-PRODUCT DISPOSAL	WASTEWATER TREATMENT AND DISCHARGE TO RIVER
	EFFLUENT STREAM TO HOLDING POND.
CONTROL SYSTEM COST	CAPITAL: $523,000 (1975). THIS IS TOTAL INSTALLED COST OF THE FGD SYSTEM.
	OPERATING: $30,200/YR THIS INCLUDES ELECTRICITY, STEAM, MAINTENENCE, LABOR, AND MATERIALS.

BACKGROUND INFORMATION

THE GREAT WESTERN SUGAR COMPANY HAS TWO COAL FIRED BOILERS AT THEIR SCOTTSBLUFF, NEBRASKA PLANT. EACH BOILER IS RATED AT 150,000 LBS/HR OF STEAM; AND BURNS COAL WITH 0.61 PERCENT AVERAGE SULFUR, 5.2 PERCENT AVERAGE ASH, AND AN AVERAGE HEATING VALUE OF 9300 BTU/LB. THE SUGAR FACTORY IS OPERATIONAL ONLY 3 MONTHS OF EVERY YEAR, DURING THE FALL QUATER.

THE FGD SYSTEM WAS RETROFITTED IN OCT. '75 AS A PROPRIETARY DESIGN PRIMARILY FOR PARTICULATE CONTROL. THE FLUE GASES FROM TWO BOILERS (130,000 ACFM EACH @ 400 F) PASS THROUGH CYCLONES AND ARE MIXED, AND THEN SENT THROUGH TWO VENTURI SCRUBBERS, WHICH OPERATE WITH A PRESSURE DROP OF 6 IN. OF WG AND L/G VALUE OF 6.5 GAL/1000 ACF. THE OPERATING GAS VELOCITY AT THE VENTURI INLET IS 56 FPS. THE SCRUBBERS ARE FOLLOWED BY A DEMISTER VESSEL WHICH CONTAINS A SINGLE-PASS, THREE-STAGE CHEVERON DEMISTER. WASH WATER FLOW TO THE DEMISTER IS 150 GPM, WITH A FREQUENCY OF 10 MINUTES EVERY 4 HOURS. THE PRESSURE DROP ACROSS DEMISTER IS 0.5 IN. OF WG. THE SCRUBBER EFFLUENT, 825 GPM FROM EACH SCRUBBER, IS SENT TO A POND.

SECTION 9 (CONTINUED)

PERFORMANCE DESCRIPTION FOR OPERATIONAL FGD SYSTEMS ON INDUSTRIAL BOILERS

GREAT WESTERN SUGAR; SCOTTS BLUFF, NEBRASKA (CONTINUED)

THE VENTURI SCRUBBERS, VARIABLE DIAMETER PLUGS, DEMISTER VESSEL, AND THE DEMISTER ARE ALL MADE OF 316 L SS. THE TOTAL INSTALLED COST OF THE VENTURI SCRUBBER SYSTEM WAS $744,000 IN 1974 DOLLARS. THE OPERATING COST FOR THE SYSTEM IS $108,100/YR.

SECTION 9 (CONTINUED)

PERFORMANCE DESCRIPTION FOR OPERATIONAL FGD SYSTEMS ON INDUSTRIAL BOILERS

INSTALLATION NAME	ITT RAYONIER, INC.
INSTALLATION LOCATION	FERNANDINA BEACH, FLORIDA
SOURCE CHARACTERISTICS	BARK AND OIL (2% - 2.5% SULFUR)
SOURCE RATING	201,000 SCFM (TOTAL - 2 BOILERS)
NUMBER OF SEPARATE FGD UNITS	2
SOURCE CAPACITY	100 MW TOTAL - 4 BOILERS; EACH BARK BOILER HAS A SCRUBBER
CONTROL SYSTEM VENDOR	AIRPOL INDUSTRIES
CONTROL PROCESS	SODIUM HYDROXIDE SCRUBBING
NEW / RETROFIT	RETROFIT
START-UP DATE	1975
CONTROL SYSTEM STATUS	OPERATIONAL
SO2 EFFICIENCY	80% - 85% (1,200 PPM AT INLET)
PARTICULATE EFFICIENCY	97% (1.7 GR/SCF AT INLET)
WATER MAKE-UP	OPEN LOOP
SLUDGE OR BY-PRODUCT DISPOSAL	WASTEWATER TREATMENT AND DISCHARGE TO TAILINGS POND
CONTROL SYSTEM COST	DUCTWORK, AND STACKS. CAPITAL: $500,000 (1975). COST IS FOR 2 SCRUBBERS, DUCTWORK, AND STACKS.

BACKGROUND INFORMATION

ITT RAYONIER OPERATES AN AMMONIUM-BASED SULFITE PULP MILL IN FERNANDINA BEACH, FLORIDA. THERE ARE FOUR PROCESS STEAM BOILERS OPERATING IN THE FOLLOWING MANNER:

NO. 1 - 100,000 LB/HR STEAM- FIRES FUEL OIL (NO. 6)

NO. 2 - 125,000 LB/HR STEAM- FIRES A COMBINATION OF BARK AND NO. 6 FUEL OIL

NO. 3 - SAME AS NO. 2

NO. 4 - 150,000 LB/HR STEAM- FIRES FUEL OIL (NO. 6)

AIRPOL INDUSTRIES HAS SUPPLIED TWO SCRUBBING TRAINS, EACH TRAIN CONSISTING OF A VENTURI SCRUBBER FOLLOWED BY AN ABSORBER MODULE. FLUE GASES FROM BOILERS NO. 1 AND NO. 2 PASS THROUGH ONE TRAIN, AND THE GASES FROM NO. 3 AND NO. 4 PASS THROUGH THE OTHER TRAIN. THE SCRUBBING LIQUOR IS SPENT CAUSTIC FROM THE MIDDLE STAGE OF THE PULP BLEACHING OPERATION. PH IS MAINTAINED AT 5.5 TO 6.0.

OPERATING HISTORY

4TH QUARTER-1977 PLANT REPORTS THAT BOILERS NO. 2 AND 3 ARE CURRENTLY OPERATING AT REDUCED LOADS, EACH IN THE RANGE OF 75,000 - 90,000 LBS/HR STEAM. THE SPENT CAUSTIC IS CURRENTLY NOT BEING USED FOR SCRUBBING LIQUOR. ITT IS SELLING THE SPENT CAUSTIC TO KRAFT MILLS WHO USE IT FOR THEIR SODA BASE. CONDENSATE STEAM IS BEING RECYCLED AND USED FOR SCRUBBING PURPOSES.

SECTION 9 (CONTINUED)

PERFORMANCE DESCRIPTION FOR OPERATIONAL FGD SYSTEMS ON INDUSTRIAL BOILERS

ITT RAYONIER, INC.; FERNANDINA BEACH, FLORIDA (CONTINUED)

SOME EROSION HAS BEEN NOTED AT THE VENTURI THROAT.

2ND QUARTER-1978 THE PLANT IS STILL UTILIZING CONDENSATE WATER FOR SCRUBBER LIQUOR. APPROXIMATELY 3 TONS PER DAY OF SODIUM HYDROXIDE IS USED TO MAINTAIN PH. THE ORIGINAL HOT WASTE STREAM CAUSTIC HAS NOT BEEN USED FOR SCRUBBER PURPOSES, BECAUSE OF PROCESS-RELATED PROBLEMS THAT DEVELOPED. SCRUBBER EFFLUENT IS STILL BEING SOLD TO KRAFT MILLS. THE SYSTEM HAS TWO SCRUBBERS, "A" AND "B". A-MODULE WAS DOWN 4 WEEKS IN JUNE AND JULY BECAUSE OF AN F.D. FAN FAILURE, BELIEVED TO BE A RESULT OF POORLY OPERATED MECHANICAL COLLECTORS. NEW MECHANICALS ARE BEING INSTALLED TO PREVENT FURTHER ABRASION. THE PLANT REPORTS THAT SINCE JAN. SCRUBBER OPERABILITY HAS BEEN APPROXIMATELY 95%.

SECTION 9 (CONTINUED)

PERFORMANCE DESCRIPTION FOR OPERATIONAL FGD SYSTEMS ON INDUSTRIAL BOILERS

INSTALLATION NAME	KERR-MCGEE CHEMICAL CORP.
INSTALLATION LOCATION	TRONA, CALIFORNIA
SOURCE CHARACTERISTICS	COKE, COAL, OIL (0.5% - 5% SULFUR)
SOURCE RATING	726,000 ACFM @ 320 DEGREES F (TOTAL - 2 BOILERS)
NUMBER OF SEPARATE FGD UNITS	2
SOURCE CAPACITY	64 MW (ELECTRIC POWER AND PROCESS STEAM) TOTAL - 2 BOILERS
CONTROL SYSTEM VENDOR	COMBUSTION EQUIPMENT ASSOC.
CONTROL PROCESS	SODIUM CARBONATE SCRUBBING
NEW / RETROFIT	NEW
START-UP DATE	JUNE, 1978
CONTROL SYSTEM STATUS	OPERATIONAL
SO2 EFFICIENCY	98+% (AT MAXIMUM LOADING)
PARTICULATE EFFICIENCY	98.5% (COLLECTED BY PRECEDING ESP'S)
WATER MAKE-UP	OPEN LOOP* 125 GPM BURKITE SCRUBBING LIQUOR (47% NA2CO3 AND 41% NA2SO4)
SLUDGE OR BY-PRODUCT DISPOSAL	HOLDING POND FOR EVAPORATION SCRUBBER EFFLUENT IS CLARIFIED AND THEN PUT INTO A MINERAL DEPOSIT.
CONTROL SYSTEM COST	KERR-MCGEE SPENT $1.5 MM IN A PILOT PLANT FOR SEVERAL YEARS BEFORE AND DURING CONSTRUCTION OF THE NEW FACILITY. OUT OF THE $200 MM PROJECT COST, $22 MM IS FOR POLLUTION CONTROL EQUIPMENT, AND $16 MM OF THAT IS FOR POWER PLANT WITH ITS RELATED POLLUTION CONTROL APPARATUS.

BACKGROUND INFORMATION

KERR-MCGEE CHEMICAL CORP. HAS A NEW 1.3 MM TON/YR SODA ASH PLANT AT TRONA, CALIFORNIA. THE PLANT, LOCATED ALONG THE SHORE OF SEARLES LAKE, IS THE LARGEST YET BUILT TO YIELD SODA ASH BY DIRECT CARBONATION OF BRINE AND WAS COMMISSIONED IN JUNE 1978. THE PROCESSING INNOVATIONS, WHICH HAVE IMPROVED THE PLANT EFFICIENCY, INCLUDE CARBONATION UNDER 13.5 LB/SQ. IN. PRESSURE, USE OF A COAL-FIRED POWER PLANT, AND RECOVERY OF CO2 FROM THE FLUE GASES.

THE PLANT HAS TWO BOILERS, EACH RATED AT 32 MW, WHICH PRODUCE PROCESS STEAM AND ELECTRICITY. EACH BOILER PRODUCES 600,000 LBS/HR OF STEAM AT 1500 PSI AND BURNS A MIXTURE OF WESTERN COAL (0.7 PERCENT SULFUR) AND PETROLEUM COKE (1.5 PERCENT SULFUR). THE HIGH SULFUR COKE IS MIXED WITH THE COAL IN ORDER TO IMPROVE THE PARTICAL IONIZATION AND IN TURN FLY-ASH COLLECTION IN THE ESP WHICH OPERATES ON THE COLD SIDE OF THE PREHEATER AT 98.5 PERCENT EFFICIENCY AND 300 F. THE FLUE GAS FLOW RATE FROM EACH BOILER IS 363,000 ACFM AT 320 F AND MAY CONTAIN SO2 BETWEEN 335 TO 5985 PPM

SECTION 9 (CONTINUED)

PERFORMANCE DESCRIPTION FOR OPERATIONAL FGD SYSTEMS ON INDUSTRIAL BOILERS

KERR-MCGEE CHEMICAL CORP.; TRONA, CALIFORNIA (CONTINUED)

DEPENDING UPON THE FUEL. THE AIR POLLUTION REGULATIONS DICTATE THAT EACH BOILER MAY RELEASE NOT MORE THAN 10 LBS/HR PARTICULATE, 200 LBS/HR OF SO2 AND 140 LBS/HR OF NOX.

THE FLUE GASES ARE SCRUBBED BY THE END LIQUOR FROM THE SODA ASH PLANT IN TWO SCRUBBERS (30 FT DIA X 35 FT HIGH EACH) WHICH ARE MILD STEEL VESSELS WITH FLAKE LINING AND POLYPROPYLENE SIEVE TRAYS. THE TOP TRAY RECEIVES PLAIN WATER WHEREAS THE SECOND TRAY RECEIVES THE RECIRCULATING LIQUOR AT PH OF 6 - 6.5. THE SPENT LIQUOR FROM THE BOTTOM OF THE SCRUBBERS IS RECIRCULATED BY RUBBER LINED PUMPS TO A MILD STEEL SURGE TANK WHERE FRESH END-LIQUOR IS ADDED TO IT WITHOUT AGITATION. A BLEED OFF STREAM IS CONTINUOUSLY TAKEN BACK TO THE SALT PONDS.

THE BOILER I.D. FANS (1600 HP.) FORCE THE GASES THROUGH THE SCRUBBERS AND EXPERIENCE 6 IN. WG PRESSURE DROP. THE FANS HAVE MILD STEEL CASING. THE DOWNSTREAM DUCTWORK IS MILD STEEL WITH FLAKE LINING WHEREAS THE STACK IS CONCRETE WITH FRP LINER. AMBIENT AIR IS HEATED IN AN EXTERNAL STEAM HEATER AND MIXED WITH THE EXIT FLUE GASES TO INCREASE THE TEMPERATURE FROM 125 F TO ABOUT 175 F. AT MAXIMUM LOADING, THE SCRUBBERS HAVE A SO2 REMOVAL EFFICIENCY OF 98 PERCENT. THE SCRUBBED FLUE GASES WILL BE PROCESSED THROUGH TWO MONOETHANOLAMINE (MEA) PLANTS FOR EXTRACTION OF CO2. EACH PLANT WILL PRODUCE 300 TONS/DAY OF CO2 AND WILL BE THE MAIN SOURCE OF MAKEUP CO2 IN THE CARBONATION PLANT.

OPERATING HISTORY

1ST QUARTER-1978 THE MAJOR CONSTRUCTION WORK WAS OVER. PRECOMMISSIONING ACTIVITIES WERE UNDERWAY. THE PLANT WAS PROJECTED TO GO ONSTREAM BY APRIL 1, 1978.

2ND QUARTER-1978 THE FGD SYSTEM WAS COMMISSIONED DURING THE REPORT PERIOD. THE BOILERS WERE RUN TO FULL CAPACITY WITH 100 % OIL FEED. COAL AND COKE WERE USED UP TO 80 % OF THE FUEL. THE MAJOR STARTUP PROBLEM WAS TRAY TIEDOWN. THE POLYPROPYLENE SIEVE TRAYS WERE NOT STRONG ENOUGH TO TAKE THE LOAD OF INVENTORY LIQUID. THESE WILL BE REPLACED BY 316L SS OR A HIGHER GRADE ALLOY. THE PRESENCE OF CHROMATE IONS IN THE MAKEUP WATER CAUSED SOME CONCERN.

SECTION 9 (CONTINUED)

PERFORMANCE DESCRIPTION FOR OPERATIONAL FGD SYSTEMS ON INDUSTRIAL BOILERS

INSTALLATION NAME	MEAD PAPERBOARD CO.
INSTALLATION LOCATION	STEVENSON, ALABAMA
SOURCE CHARACTERISTICS	OIL (1.5% - 3% SULFUR)
SOURCE RATING	100,000 ACFM @ 450 F (TOTAL - 2 BOILERS)
NUMBER OF SEPARATE FGD UNITS	1
SOURCE CAPACITY	50 MW (EQUIVALENT); TOTAL - TWO BOILERS
CONTROL SYSTEM VENDOR	AIRPOL INDUSTRIES
CONTROL PROCESS	SODIUM HYDROXIDE SCRUBBING
NEW / RETROFIT	NEW
START-UP DATE	1975
CONTROL SYSTEM STATUS	OPERATIONAL
SO2 EFFICIENCY	95% (1,500 PPM @ INLET)
PARTICULATE EFFICIENCY	90%
SLUDGE OR BY-PRODUCT DISPOSAL	ALKALINE SULFITE/BISULFITE RECYCLED TO PULP PROCESS RECOVERED SOLUTION USED AS MAKE-UP TO COOKING LIQUOR IN PULP MILL.
CONTROL SYSTEM COST	CAPITAL: $173,000 (1974). THIS WAS THE ORIGINAL EQUIPMENT AND INSTALLATION COST. SINCE THEN EXTENSIVE MODIFICATIONS HAVE BEEN REQUIRED. ANOTHER 173,000 WAS SPENT FOR REPAIRS AND UPGRADING IN 1976. OVER THE SCRUBBER PLANT LIFE, AN ADDITIONAL 136,000 HAS BEEN SPENT, INCLUDING: 35,000 (RUBBER LINERS), 54,000 (STAINLESS STEEL LINERS), AND 47,000 (GENERAL REPAIRS).
	OPERATING: $40,000/YR, OPERATING LABOR $40,000/YR, MAINTANENCE LABOR $760,000/YR, REAGENT COST (8526 TONS/YR) 6.25 %/YR DEPRECIATION ON CAPITAL

BACKGROUND INFORMATION

THE MEAD PAPERBOARD COMPANY IN STEVENSON, ALABAMA, IS A NEUTRAL SULFITE PULP MILL WITH A 500 TON/DAY PULP PRODUCTION RATE. THE MILL HAS A CHEMICAL RECOVERY SYSTEM THAT ABSORBS SO2 FROM THE BILLERUD REACTOR. EFFLUENT FROM THE RECOVERY SYSTEM FLOWS BACK TO THE PULPING OPERATION. ELSEWHERE ON-SITE, AN AIRPOL INDUSTRIES ABSORBER TOWER CONTROLS PARTICULATE AND SO2 EMISSIONS FROM TWO OIL-FIRED (1.5% - 3.0% SULFUR) COMBUSTION-ENGINEERING PACKAGE BOILERS. FLUE GAS VOLUME INTO THE SCRUBBER SYSTEM IS ABOUT 175,000 ACFM @ 450 F. HOT GASES PASS THROUGH A STAINLESS STEEL VENTURI/QUENCH SECTION FOR COOLING AND INITIAL SO2 REMOVAL. THE FLUE GAS THEN ENTERS THE BOTTOM OF

SECTION 9 (CONTINUED)

PERFORMANCE DESCRIPTION FOR OPERATIONAL FGD SYSTEMS ON INDUSTRIAL BOILERS

MEAD PAPERBOARD CO.: STEVENSON, ALABAMA (CONTINUED)

THE ABSORBER SECTION AND PASSES UP THROUGH THREE BUBBLE-CAP TRAYS. A SODIUM CARBONATE SOLUTION IS INTRODUCED THROUGH A BANK OF 1.5 INCH NOZZLES AND SPIN VANES. THE GAS EXITS THROUGH A FIBERGLASS STACK. SCRUBBER EFFLUENT (600 GPM), MOSTLY SODIUM SULFITE, IS SENT TO THE MILLS PULPING OPERATIONS FOR EVENTUAL USE IN THE DIGESTERS. PH IS CONTROLLED AT 7.0-8.5 IN THE RECIRCULATION TANK.

THE SO2 SCRUBBING SYSTEM WAS DOWN FROM MARCH THROUGH JULY 1976 DUE TO ABRASION PROBLEMS. THE ABRASION WAS CAUSED PARTIALLY BY HIGH STREAM VELOCITY THROUGH THE EXISTENT VENTURI PARTICULATE SCRUBBER INTO THE SO2 SCRUBBER. SODIUM CARBONATE AND CARBON PARTICLES THAT HAD NOT GONE INTO SOLUTION ALSO WERE VERY ABRASIVE TO THE SO2 SCRUBBER LINING. IN ADDITION, THE ORIGINAL GLASS-FLAKED LINER (5 MM THICK) WAS EXPERIENCING STRESS CRACKING.

THE HIGH VELOCITIES INTRODUCED BY THE VENTURI WERE ELIMINATED BY REMOVING THE PARTICULATE VENTURI SECTION OF THE SYSTEM. THE GLASS-FLAKED LINING WAS PATCHED WITH $60,000 WORTH OF CARPENTER 20 LINER. THESE CORRECTIVE ACTIONS HELPED FOR A WHILE, BUT AS IT TURNED OUT, THE CARPENTER 20 WAS NOT INSTALLED PROPERLY AND SOLUTION WAS GETTING BETWEEN IT AND THE MILD STEEL SHELL. IT WAS FINALLY DECIDED TO INSTALL NEW RUBBER LINING INSIDE THE ENTIRE SCRUBBER, INCLUDING THE SPIN VANES, AT A COST OF $150,000. TO PREVENT ANY HEAT PROBLEMS, ADDITIONAL NOZZLES WERE INSTALLED. TO DATE, NO MAJOR PROBLEMS HAVE OCCURRED WITH THE RUBBER LINING.

OPERATING HISTORY

4TH QUARTER-1977 MINOR EMBRITTLEMENT, DUE TO LOCALIZED HIGH TEMPERATURE, HAS BEEN DETECTED ON THE LINING SURFACE, SOME METAL, NOZZLES, AND RUBBER HAVE BEEN REPLACED.

2ND QUARTER-1978 THE PLANT WAS DOWN 12 DAYS IN JUNE FOR A MAJOR PAPER MACHINE UPDATE, AND THE BOILERS WERE DOWN 9 DAYS DURING THAT PERIOD. DURING BOILER DOWN TIME, THE RUBBER LINERS IN THE ABSORBER MODULE WERE REPAIRED AND MODIFICATIONS WERE MADE AT THE INLET TO THE ABSORBER, REDIRECTING AIR FLOW TO MINIMIZE FURTHER FLY ASH ABRASSION OF THE LINERS. THE PLANT REPORTED AN OPERABILITY OF 100% FOR THE FGD SYSTEM.

SECTION 9 (CONTINUED)

PERFORMANCE DESCRIPTION FOR OPERATIONAL FGD SYSTEMS ON INDUSTRIAL BOILERS

INSTALLATION NAME	MINN-DAK FARMER'S COOPERATIVE
INSTALLATION LOCATION	WAHPETON, NORTH DAKOTA
SOURCE CHARACTERISTICS	LIGNITE (1.0% SULFUR)
SOURCE RATING	160,000 ACFM @ 350 F (TOTAL - 2 BOILERS)
NUMBER OF SEPARATE FGD UNITS	2
SOURCE CAPACITY	82 MW (EQUIVALENT); TOTAL - 2 BOILERS
	TWO BOILERS, EACH @ 275,000 LBS/HR STEAM (250 PSIG - 455 F)
CONTROL SYSTEM VENDOR	KOCH ENGINEERING
CONTROL PROCESS	AMMONIA SCRUBBING
NEW / RETROFIT	RETROFIT
START-UP DATE	JUNE, 1977
CONTROL SYSTEM STATUS	OPERATIONAL
SO2 EFFICIENCY	TESTS INCONCLUSIVE.
WATER MAKE-UP	200 GPM POND WATER
SLUDGE OR BY-PRODUCT DISPOSAL	WASTEWATER TREATMENT
	BLEED STREAM GOES TO AN ACTIVATED SLUDGE SYSTEM @ 160 GPM
CONTROL SYSTEM COST	CAPITAL: $300,000 (1977). TOTAL EQUIPMENT COST.

BACKGROUND INFORMATION

MINN-DAK FARMER'S COOP. HAS A SUGAR FACTORY AT WAHPETON, NORTH DAKOTA. THERE ARE TWO BOILERS, EACH WITH A CAPACITY OF 275,000 LBS STEAM/HR AT 250 PSIG AND 455 F. THE FUEL BURNED IS 1% SULFUR LIGNITE. SULFUR DIOXIDE REMOVAL IS EFFECTED BY AMMONIA ADDITION TO THE RECIRCULATING SCRUBBER LIQUOR.

KOCH ENGINEERING HAS SUPPLIED TWO SCRUBBERS FOR THE BOILERS EACH OF WHICH GENERATES 125,000 ACFM OF FLUE GASES AT 350 F. THE SCRUBBER SYSTEMS WENT ONSTREAM IN JUNE 77. EACH SCRUBBER IS A VARIABLE THROAT VENTURI WITH OPEN ENDED PIPE INLETS FOR LIQUID AND WAS PRIMARLY DESIGNED FOR PARTICULATE CONTROL. THE SCRUBBER LIQUOR IS RECIRCULATED AT A RATE OF 800 GPM AND THE BLEED-OFF RATE GOING TO THE ACTIVATED SLUDGE SYSTEM IS 160 GPM. THE MAKEUP POND WATER FLOW RATE IS 200 GPM. THE PRESSURE DROP ACROSS A SCRUBBER IS 11 IN. WG. THERE IS ONE COMMON CHEVERON TYPE DEMISTER AND ONE STACK. THE INLET CONCENTRATION RANGES ARE 76-193 LBS/HR OF SO2 AND .3-.4 GR/SCF OF PARTICULATE. THE OUTLET CONCENTRATION RANGES ARE 10-37 LBS/HR AND .027-.038 GR/SCF RESPECTIVELY.

THE SCRUBBERS AND THE LIQUOR INLET PIPES ARE MADE OF 316L SS, THE DEMISTER AND STACK 316 SS AND THE RECIRCULATING PIPING OF FIBERGLASS. THE TOTAL PURCHASE COST OF THE EQUIPMENT WAS $300,000 IN 1977 DOLLARS. INITIALLY THE SYSTEM WAS DESIGNED TO USE A LIME SLURRY OF PH 10.0 AS THE SCRUBBING LIQUOR. HOWEVER, DURING THE FIRST SIX WEEKS OF OPERATION, NUMEROUS PLUGGING AND SCALING PROBLEMS OCCURRED. HENCE, THE PLANT PERSONNEL BEGAN USING POND WATER WITH SOME AMMONIA ADDITION IN EARLY 1978.

SECTION 9 (CONTINUED)

PERFORMANCE DESCRIPTION FOR OPERATIONAL FGD SYSTEMS ON INDUSTRIAL BOILERS

MINN-DAK FARMER'S COOPERATIVE ; WAHPETON, NORTH DAKOTA (CONTINUED)

EACH YEAR, THE PLANT ONLY OPERATES SEPT. - FEB. THIS IS THE BEET SUGAR PRODUCTION PERIOD. DURING THE REMAINDER OF THE YEAR, PRODUCTION DISTRIBUTION IS THE MAIN PLANT ACTIVITY.

SECTION 9 (CONTINUED)

PERFORMANCE DESCRIPTION FOR OPERATIONAL FGD SYSTEMS ON INDUSTRIAL BOILERS

INSTALLATION NAME	MOBIL OIL COMPANY
INSTALLATION LOCATION	SAN ARDO, CALIFORNIA
SOURCE CHARACTERISTICS	OIL (2.0% - 2.25% SULFUR)
SOURCE RATING	182,000 SCFM (TOTAL - 30 BOILERS) 8000 ACFM @ 470F, FOR EACH OF 22 FGD SYSTEMS 18,000 ACFM @ 470F, FOR EACH OF 8 FGD SYSTEMS
NUMBER OF SEPARATE FGD UNITS	30
SOURCE CAPACITY	80 MW (EQUIVALENT); 840 MM BTU/HR: TOTAL - 30 BOILERS
CONTROL SYSTEM VENDOR	MOBIL OIL COMPANY
CONTROL PROCESS	SODIUM HYDROXIDE SCRUBBING
NEW / RETROFIT	RETROFIT
START-UP DATE	1974
CONTROL SYSTEM STATUS	OPERATIONAL
SO2 EFFICIENCY	90% (1500 PPM @ INLET)
SLUDGE OR BY-PRODUCT DISPOSAL	HOLDING POND FOR EVAPORATION
CONTROL SYSTEM COST	CAPITAL: $2,900,000 (1978). TOTAL INSTALLED COST REPRESENTS EQUIPMENT, INSTALLATION, PIPING, DUCTWORK, STACK, WATER TREATMENT FACILITY, AND INSTRUMENTATION. OPERATING: $1,290,000/YR (1978). THE AVERAGE OPERATING COST FOR THE 22 SMALLER SYSTEMS IS $35,000/YR EACH, AND FOR THE 8 LARGER SYSTEMS IS $65,000/YR EACH. THE OPERATING COST INCLUDES ELECTRICITY, CAUSTIC, LABOR, AND MAINTENANCE, BUT DOESN'T INCLUDE INDIRECT (FIXED) COSTS.

SECTION 9 (CONTINUED)

PERFORMANCE DESCRIPTION FOR OPERATIONAL FGD SYSTEMS ON INDUSTRIAL BOILERS

INSTALLATION NAME	NEKOOSA PAPERS, INC.
INSTALLATION LOCATION	ASHDOWN, ARKANSAS
SOURCE CHARACTERISTICS	COAL (1%-1.5% SULFUR)
SOURCE RATING	≈11,000 SCFM @ 355 F (TOTAL - 1 BOILER)
NUMBER OF SEPARATE FGD UNITS	1
SOURCE CAPACITY	100 MW (EQUIVALENT); DESIGN - 500,000 LB/HR STEAM
CONTROL SYSTEM VENDOR	AIRPOL INDUSTRIES
CONTROL PROCESS	CAUSTIC SCRUBBING
NEW / RETROFIT	NEW
START-UP DATE	FEBRUARY, 1976
CONTROL SYSTEM STATUS	OPERATIONAL
SO2 EFFICIENCY	90+% (600 PPM @ INLET)
PARTICULATE EFFICIENCY	98% - 99% (1.42 GR/SCF AT INLET)
WATER MAKE-UP	OPEN LOOP
SLUDGE OR BY-PRODUCT DISPOSAL	ALKALINE SULFITE/BISULFITE RECYCLED TO PULP PROCESS SO2 RECOVERED FROM SODIUM SULFITE/SULFATE LIQUOR AND RE-CYCLED TO PULPING PROCESS.
CONTROL SYSTEM COST	CAPITAL: $250,000 (1975). THIS IS THE EQUIPMENT COST.

BACKGROUND INFORMATION

THE NEKOOSA-EDWARDS PAPER PULP MILL IN ASHDOWN, ARKANSAS HAS TWO AIRPOL SCRUBBERS ON A 50-MW EQUIVALENT STEAM BOILER FIRED WITH COAL OR FUEL OIL. THE VENTURI SCRUBBERS ARE DESIGNED TO REMOVE BOTH SULFUR DIOXIDE AND PARTICULATES. THE INTENT OF NEKOOSA-EDWARDS WAS TO MAKE, FROM THE SCRUBBER EFFLUENT, SALTCAKE WHICH WOULD BE USED AT THE MILL. THE COAL HAS 1-1.5% SULFUR AND A HEATING VALUE OF 12,000 BTU/LB. IT IS BURNED AT A RATE OF 27 TONS/HR.

THE SCRUBBER HANDLES 325,000 ACFM AT 355 DEGREES F. SCRUBBER INLET SO2 CONCENTRATION IS TYPICALLY 600 PPM WITH A PARTICULATE LOADING OF 1.42 GR/SCFM. RECIRCULATED WATER IS BLED OFF AT 150-250 GPM. REAGENT MAKE-UP AMOUNTS TO 12 LB/MIN OF SODIUM HYDROXIDE. SCRUBBER UNDERFLOW CONSISTS OF FLYASH AND A SOLUTION OF SODIUM SULFITE/SULFATE. THE ASH SLURRY GOES TO A SETTLING POND.

THE PREDOMINANT DIFFICULTIES WITH THE FGD SYSTEM HAVE BEEN TWO-FOLD. FIRST, THE PLANT HAS BEEN UNABLE TO DEVELOP AN ADEQUATE PH CONTROL MECHANISM. THE PH CONTROL SYSTEM MONITORS THE AMOUNT OF CAUSTIC AGENT, I.E., SODIUM HYDROXIDE, WHICH GOES INTO THE RECYCLE TANK, KEEPING THE PH OF THE SCRUBBER SOLUTION AT A NONCORROSIVE LEVEL. THE PLANT HAS BEEN PLAGUED WITH PROBLEMS IN OPERATING THE PH CONTROL SYSTEM AND HAS SUFFERED A GREAT DEAL OF CORROSION. THE SECOND PROBLEM CONCERNS THE CHEMICAL REGENERATION PORTION OF THE SYSTEM. THE INTENT OF THE PLANT WAS TO SEPARATE THE FLY ASH FROM THE SCRUBBER LIQUID AND TAKE THE SCRUBBER LIQUID THROUGH A SERIES OF EVAPORATORS

SECTION 9 (CONTINUED)

PERFORMANCE DESCRIPTION FOR OPERATIONAL FGD SYSTEMS ON INDUSTRIAL BOILERS

NEKOOSA PAPERS, INC.; ASHDOWN, ARKANSAS (CONTINUED)

WHERE SODIUM SULFATE, I.E., SALTCAKE, WOULD BE GENERATED. THE PLANT HAS BEEN UNABLE TO OPERATE THE FLY ASH SEPARATION SYSTEM PROPERLY, AND THERE IS NOT ENOUGH EVAPORATION CAPACITY FOR THE PLANT TO PROCESS THE SCRUBBER EFFLUENT AT FULL OPERATIONAL CAPACITY.

IN SPITE OF THE OPERATIONAL PROBLEMS, THE SULFUR DIOXIDE AND PARTICULATE REMOVAL EFFICIENCIES OF THE FGD SYSTEM ARE 90 AND 99 PERCENT, RESPECTIVELY, ACCORDING TO THE PLANT ENGINEER. THE WASTE PRODUCT FROM THE SCRUBBER IS NOT RECYCLED, AT PRESENT, AND IS PUMPED TO THE WASTEWATER TREATMENT PLANT. CLEANED WASTEWATER IS RETURNED TO THE RIVER.

UPON STARTUP, PROBLEMS OCCURED WITH THE PIPING AND VALVES WHICH WERE CONSTRUCTED OF CARBON STEEL. THE CARBON STEEL SYSTEM WAS REMOVED AND REPLACED WITH STAINLESS STEEL VALVES AND PIPING. SOME PIPING LEAKS OCCURRED AND WERE REWELDED. SOME CORROSION OF DUCT DAMPERS OCCURED AND WERE RELIEVED BY ADJUSTING THE PH OF THE SCRUBBING LIQUOR. THE PH IS MAINTAINED BETWEEN 5.5 - 6.0.

THE SCRUBBER SYSTEM OPERATES WITHOUT REHEAT, EXHAUSTING TO A FIBERGLASS COATED STACK. PARTICULATES ARE CONTROLLED WITH CYCLONES AND TWO VARIABLE THROAT VENTURI SCRUBBERS WITH AN AVERAGE PRESSURE DROP OF 14 TO 16 INCHES W.G.

OPERATING HISTORY

3RD QUARTER-1977 NO MAJOR PROBLEMS HAVE BEEN REPORTED.
CORROSION PROBLEMS STILL EXIST AND PH CONTROL IS STILL A PROBLEM. FLOW METERS ARE BEING INSTALLED TO MONITOR SCRUBBER WATER.

4TH QUARTER-1977 TWO FLOW METERS HAVE BEEN INSTALLED AT EACH SCRUBBER, ONE AT THE THROAT INLET OF THE VENTURI AND ONE AT THE THROAT. THE PLANT REPORTS THAT PH CONTROL IS STILL A PROBLEM. SOME PROBLEMS ARE BEING ENCOUNTERED WITH THE PH PROBES DUE TO THE CONSTANT FLOW OF LARGE AMOUNTS OF SOLIDS, AND SOLIDS DEPOSITS ON THE PROBES.

2ND QUARTER-1978 NO MAJOR PROBLEMS HAVE OCCURRED DURING THE REPORT PERIOD. IN JUNE A PARTICULATE COMPLIANCE TEST WAS RUN. PARTICULATE EMISSIONS WERE 0.05 LB/MM BTU AGAINST THE 0.1 LB/MM BTU REGULATION. THE CAUSTIC SCRUBBING SOLUTION IS CYCLED TO THE SCRUBBER FROM THE PULP BLEACH PLANT AT 400 GPM. THE BOILER OPERATED 2153 HOURS AT 40% TO 60% CAPACITY. DURING THAT PERIOD THE SCRUBBER DEMONSTRATED 100% OPERABILITY.

SECTION 9 (CONTINUED)

PERFORMANCE DESCRIPTION FOR OPERATIONAL FGD SYSTEMS ON INDUSTRIAL BOILERS

INSTALLATION NAME	RICKENBACKER AIR FORCE BASE
INSTALLATION LOCATION	COLUMBUS, OHIO
SOURCE CHARACTERISTICS	COAL (3.6% SULFUR)
SOURCE RATING	50,000 SCFM (1 BOILER)
NUMBER OF SEPARATE FGD UNITS	1
SOURCE CAPACITY	20 MW (EQUIVALENT)
CONTROL SYSTEM VENDOR	RESEARCH-COTTRELL/BAHCO
CONTROL PROCESS	LIMESTONE SCRUBBING
NEW / RETROFIT	RETROFIT
START-UP DATE	MARCH, 1976
CONTROL SYSTEM STATUS	OPERATIONAL
SO_2 EFFICIENCY	90% (AVERAGE)
PARTICULATE EFFICIENCY	98%
WATER MAKE-UP	OPEN LOOP - 2.5 GPM/MW (MAX)
SLUDGE OR BY-PRODUCT DISPOSAL	NON-FIXATED SLURRY TO LINED POND UNSTABILIZED $CaSO_3/SO_4$ SLUDGE TO LINED POND
CONTROL SYSTEM COST	CAPITAL: $2,200,000 (1975). THIS COST INCLUDES ADJACENT ELECTRICAL SUBSTATION, SLUDGE DISPOSAL, EXTERNAL FLUES, AND OTHER ATYPICAL EQUIPMENT. OPERATING: $5.92/TON OF COAL (1977). THESE WERE THE OVERALL 1977 OPERATING COSTS FOR 35,000 TONS OF COAL. DURING THE 1977 U.S.E.P.A. DEMONSTRATION TEST, OPERATING COSTS WERE $5.61/TON OF COAL. THESE COSTS INCLUDE OPERATING AND MAINTENANCE, LABOR, POWER, WATER, MAINTENANCE PARTS, AND SLUDGE DISPOSAL, BUT DOES NOT INCLUDE DEPRECIATION.

BACKGROUND INFORMATION

IN 1971 RESEARCH-COTTRELL CONCLUDED AN AGREEMENT WITH A.B. BAHCO VENTILATION, ENKOPING SWEDEN. THIS CONTRACTUAL ARRANGEMENT ALLOWED RESEARCH-COTTRELL TO BE THE EXCLUSIVE LICENSEE OF THE BACHO SULFUR DIOXIDE SCRUBBING PROCESS IN THE UNITED STATES. TO DATE, THERE ARE 19 BACHO SULFUR DIOXIDE SCRUBBING SYSTEMS IN THE VARIOUS STAGES OF DEVELOPMENT THROUGHOUT THE WORLD. THE FIRST U.S. BACHO INSTALLATION HANDLES SEVEN STOKER-TYPE COAL-FIRED BOILERS AT THE RICKENBACKER AIR FORCE BASE IN COLUMBUS, OHIO. THREE BOILERS WERE PLACED IN SERVICE IN 1952 AND THE REMAINING FOUR IN 1954. THE UNITS FIRE A HIGH-SULFUR COAL, 3.6 PERCENT SULFUR.

THE RICKENBACKER EMISSION CONTROL SYSTEM CONSISTS ESSENTIALLY OF A MECHANICAL COLLECTOR, BACHO

SECTION 9 (CONTINUED)

PERFORMANCE DESCRIPTION FOR OPERATIONAL FGD SYSTEMS ON INDUSTRIAL BOILERS

RICKENBACKER AIR FORCE BASE; COLUMBUS, OHIO (CONTINUED)

SCRUBBER TOWER, LIMESTONE STORAGE AND HANDLING SYSTEM, CLARIFIER, BOOSTER FAN AND ASSOCIATED DUCTWORK, PUMPS, CONTROLS, AND A SLUDGE DISPOSAL POND.

SOLID PARTICULATE AND SULFUR DIOXIDE-LADEN FLUE GAS TAKEN FROM EACH OF THE EXISTING SEVEN STACKS IS FED THROUGH A COMMON HEADER AND INTO A MECHANICAL COLLECTOR WHERE PRIMARY PARTICULATE REMOVAL TAKES PLACE. THE MECHANICAL COLLECTOR HAS A DESIGN REMOVAL EFFICIENCY OF 70 PERCENT AND WAS INSTALLED PRIMARILY TO REDUCE FAN WEAR. THE PARTLY CLEANED GAS THEN FLOWS INTO THE BACHO TOWER WHERE ADDITIONAL PARTICULATE AND PRIMARY SULFUR DIOXIDE REMOVAL TAKES PLACE.

THE BACHO SCRUBBING VESSEL IS A VERTICAL TOWER CONSISTING OF TWO SCRUBBING STAGES. GAS FLOWS THROUGH THE TOWER WHERE IT IS CONTACTED WITH A LIMESTONE SLURRY. AFTER PASSING THROUGH THE FIRST SCRUBBING STAGE, ENTRAINED MOISTURE IS REMOVED BY A CYCLONIC TYPE MIST ELIMINATOR. THE GAS THEN PASSES THROUGH A SECOND SCRUBBING STAGE AND A SECOND CYCLONIC MIST ELIMINATOR. THE CLEANED GAS IS DISCHARGED TO THE ATMOSPHERE THROUGH A STUB STACK ATOP THE ABSORBER TOWER.

FINE MESH LIMESTONE IS EMPLOYED AS THE REAGENT IN THE SCRUBBING SYSTEM. THE SCRUBBING SLURRY IS THEN PUMPED TO THE ABSORBER WHERE IT IS CONTACTED WITH THE FLUE GAS IN A COUNTERCURRENT FASHION.

THE SPENT SCRUBBING SOLUTION IS DISCHARGED TO THE THICKENER WHERE THE WASTE SOLIDS SETTLE OUT. THICKENER OVERFLOW IS RETURNED TO THE MIX/HOLD TANK. THICKENER UNDERFLOW IS DISCHARGED TO A 5-ACRE HYPALON-LINED DISPOSAL POND. THIS POND IS LOCATED APPROXIMATELY 400 FEET FROM THE ABSORBER TOWER. CLEAR WATER FROM THE POND IS RETURNED TO THE PROCESS AS MAKE-UP WATER IN THE SLURRY TANK.

OPERATING HISTORY

THE SYSTEM WAS INITIALLY PLACED IN SERVICE MARCH 11, 1976. INITIAL OPERATION PROCEEDED IN AN OPEN WATER LOOP MODE BECAUSE THE THICKENER WAS NOT YET COMPLETELY INSTALLED. SULFUR DIOXIDE INLET CONCENTRATIONS WERE IN THE 1800 TO 2000 PPM RANGE. HIGH OXYGEN CONCENTRATIONS ALSO EXIST IN THE FLUE GAS BECAUSE THESE OLDER, INEFFICIENT BOILERS OPERATE AT 150 TO 160 PERCENT EXCESS AIR RATES. SULFUR DIOXIDE REMOVAL EFFICIENCY HAS BEEN IN THE LOW 90 PERCENT PLUS RANGE. EARLY PROBLEMS WERE PRIMARILY OF A MECHANICAL NATURE USUALLY ASSOCIATED WITH START-UP. THE MAJOR START-UP PROBLEMS WERE AS FOLLOWS:

1. ELECTRICAL CIRCUITS AND SYSTEM CONTROL PANEL.
2. PUMP MALFUNCTION-SPARE PARTS SHIPMENT DELAY.
3. SEDIMENTATION BUILDUP IN THE SCRUBBER VESSEL (THIS WAS DUE PRIMARILY TO OPERATION AT HIGHER THAN DESIGN SOLIDS CONCENTRATION IN THE SCRUBBING SOLUTION BECAUSE THE THICKENER WAS NOT YET IN SERVICE PLUS GRIT GETTING THROUGH THE LIME SLAKER GRIT REMOVAL STEP).
4. FAMILIARIZATION OF THE OPERATING STAFF WITH THE MECHANICS OF THE PROCESS.
5. I.D. BOOSTER FAN PROBLEMS. ADDITIONAL BRACING, AND EPOXY GROUTING WAS REQUIRED TO STOP THE ELEVATED FAN CONCRETE SUPPORT FROM VIBRATING WHILE THE FAN WAS OPERATING.

SECTION 9 (CONTINUED)

PERFORMANCE DESCRIPTION FOR OPERATIONAL FGD SYSTEMS ON INDUSTRIAL BOILERS

RICKENBACKER AIR FORCE BASE; COLUMBUS, OHIO (CONTINUED)

NOV. 76 THROUGH JUN. 77 DOWNTIME WAS LESS THAN 5%. OPERATING PROBLEMS HAVE BEEN MECHANICAL AND CONTROL RATHER THAN PROCESS-RELATED. FAN-RELATED PROBLEMS ACCOUNTED FOR OVER 75% OF THE ACTUAL DOWN-TIME. THIS RESULTED FROM EXCESSIVE FAN VIBRATIONS CAUSED BY BEARING, SUPPORT, AND INSTRUMENTATION DIFFICULTIES. IN APRIL 1977, THE FAN WHEEL DEVELOPED A CRACK IN THE RIM ATTRIBUTED TO FATIGUE FROM RESONANT VIBRATION. THE FAN WAS SENT BACK TO THE MANUFACTURER, AMERICAN STANDARD, WHO MADE THE REQUIRED MODIFICATIONS. THE ORIGINAL FAN WAS RADIAL BLADE WITH RIMS, AND A MAJOR MODIFICATION WAS CHOPPING THE RIMS OFF, THEREBY REDUCING THE DIAMETER. THE FAN WAS RETURNED IN EARLY MAY AND THE VIBRATION PROBLEM WAS SOLVED. OTHER OPERATIONS WERE RELATIVELY PROBLEM-FREE. THERE WERE NO CORROSION, EROSION, SCALING, OR PLUGGING PROBLEMS. THE SYSTEM BEGAN RUNNING ON LIMESTONE IN APRIL, AS PART OF THE EPA TEST PROGRAM. LIMESTONE PERFORMED WELL, YIELDING ADEQUATE REMOVAL. ON JUNE 3RD, THE STEAM PLANT WAS SHUTDOWN THE TIE-IN OF THE NEW NO. 8 BOILER, THIS UNIT REPLACED UNITS NO. 1 AND NO. 2, AND NO. 3 WILL BE ON STANDBY. TIE-IN WAS COMPLETED IN JUNE.

AUG. 77 THE ARMS BROKE OFF IN THE 25-FOOT DIAMETER THICKENER TANK, CAUSING A 30 DAYS DOWNTIME.

SEP. 77 A MAKE-UP WATER BOOSTER PUMP HAD TO BE REPLACED.

OCT. 77 THE MOTOR DRIVE ON THE SLAKER BELT HAD TO BE REPAIRED. ALTHOUGH THE SLAKER IS NO LONGER USED WITH THE LIMESTONE REAGENT, THE BELT IS USED TO CONVEY THE LIMESTONE TO THE DISSOLVING TANK.

1ST QUARTER-1978 IT WAS DISCOVERED THAT WITH A STOICHIOMETRIC RATIO OF 0.75 THE REQUIRED DEGREE OF SO2 REMOVAL CAN BE ACHIEVED. THE CURRENT REGULATION LIMITS EMISSIONS TO 2.2 LBS/MM BTU HEAT INPUT. DURING THE JANUARY BLIZZARD, SOME FREEZE-UP PROBLEMS WERE ENCOUNTERED.
DURING JANUARY THE BOILERS OPERATED 744 HOURS AND THE FGD SYSTEM OPERATED 596 HOURS YIELDING OPERABILITY AND AVAILABILITY INDEX VALUES OF 80%. ALL DOWNTIME WAS ATTRIBUTABLE TO FREEZE-UPS DURING BLIZZARD CONDITIONS. DURING FEBRUARY, THE BOILERS OPERATED 672 HOURS AND THE CONTROL SYSTEM OPERATED 168 HOURS. HOWEVER THE FGD SYSTEM WAS AVAILABLE 551 HOURS. THEREFORE THE OPERABILITY INDEX WAS 25% WHILE THE AVAILABILITY WAS 82%. THE ABSORBER LINES WERE THAWED OUT FEBRUARY 6, BUT DURING FEBRUARY, THE GOVERNOR OF OHIO TEMPORARILY SHELVED POLLUTION CONTROL REGULATIONS. THEREFORE THE FGD SYSTEM WAS NOT OPERATED ALTHOUGH IT WAS AVAILABLE FOR OPERATION. THE SYSTEM WAS SHUTDOWN ON FEBRUARY 13 AND DID NOT OPERATE DURING MARCH.

2ND QUARTER-1978 SYSTEM WAS RESTARTED APRIL 10 AND WAS REPORTED TO HAVE RUN WITH 100% OPERABILITY INDEX VALUE FOR THE REMAINING PERIOD. PLANT REPORTED THAT ALL PREVIOUS PROBLEMS HAVE BEEN CORRECTED. DURING THE LAST PORTION OF THE 2ND QUARTER THE BOILER LOAD DROPPED TO ITS SUMMER LEVEL, ABOUT 30 MM BTU/HR, AS OPPOSED TO THE MAXIMUM COLD SEASON LOAD OF 150 MM BTU/HR.

SECTION 9 (CONTINUED)

PERFORMANCE DESCRIPTION FOR OPERATIONAL FGD SYSTEMS ON INDUSTRIAL BOILERS

INSTALLATION NAME	SHELLER GLOBE CORP.
INSTALLATION LOCATION	NORFOLK, VIRGINIA
SOURCE CHARACTERISTICS	COAL (LESS THAN 1% SULFUR)
SOURCE RATING	6,000 SCFM (TOTAL - 2 BOILERS)
NUMBER OF SEPARATE FGD UNITS	1
SOURCE CAPACITY	4 MW (EQUIVALENT); TOTAL - 2 BOILERS
CONTROL SYSTEM VENDOR	W.W. SLY MANUFACTURING CO.
CONTROL PROCESS	SODIUM HYDROXIDE SCRUBBING
NEW / RETROFIT	RETROFIT
START-UP DATE	1975
CONTROL SYSTEM STATUS	OPERATIONAL
SO2 EFFICIENCY	NOT DETERMINED
PARTICULATE EFFICIENCY	NOT DETERMINED
SLUDGE OR BY-PRODUCT DISPOSAL	OVERFLOW TO SEWER/SLUDGE TO LANDFILL

BACKGROUND INFORMATION

IN NORFOLK, VIRGINIA, SHELLER GLOBE CORPORATION OPERATES THE MITCHELL SMITH DIVISION PLANT, WHERE THE PRIMARY PRODUCT IS CORK RUBBER GASKET MATERIAL. PROCESS (AUTOCLAVE) AND HEATING STEAM ARE SUPPLIED BY A BOILER RATED AT 350 BOILER HP (ABOUT 3.5 MW EQUIVALENT). STEAM CONDITIONS ARE 125 PSI AT 325 F. THE BOILER WAS ORIGINALLY ERECTED IN 1939, BUT UNDERWENT A COMPLETE OVERHAUL IN 1977. BOILER TUBES, REFRACTORY BRICK, GRATE, AND SOOT BLOWERS WERE REPLACED DURING THE OVERHAUL. THE BOILER FIRES COAL SUPPLIED BY GENERAL COAL - NOMINAL SIZE IS 1.25 X 0.25 INCHES. COAL CHARACTERISTICS ARE AS FOLLOWS* HHV=13,200 BTU/LB, ASH=6%, AND SULFUR IS LESS THAN 1%.

THE EMISSIONS CONTROL SYSTEM AT SHELLER GLOBE CONSISTS OF A W.W. SLY IMPINJET SCRUBBER WHICH REMOVES PARTICULATE AND SO2 FROM THE FLUE GAS. THE SYSTEM USES A SODIUM HYDROXIDE MAKE-UP FOR SO2 CONTROL. RECYCLE TANK SUPERNATANT IS PH NEUTRALIZED AND IS DISCHARGED TO CITY SEWERS. FLYASH AND SEDIMENT ARE SUMPED OUT AND HAULED TO A SANITARY LANDFILL.

OPERATING HISTORY

2ND QUARTER-1978 DURING THE REPORT PERIOD THE UNIT UNDER WENT A VIRGINIA EPA CERTIFICATION INSPECTION, AND WAS FOUND TO BE IN COMPLIANCE. NO SCRUBBER-RELATED PROBLEMS HAVE OCCURRED.

SECTION 9 (CONTINUED)

PERFORMANCE DESCRIPTION FOR OPERATIONAL FGD SYSTEMS ON INDUSTRIAL BOILERS

INSTALLATION NAME	ST. REGIS PAPER CO.
INSTALLATION LOCATION	CANTONMENT, FLORIDA
SOURCE CHARACTERISTICS	BARK AND GAS OR OIL (LESS THAN 1% SULFUR)
SOURCE RATING	115,000 SCFM (1 BOILER)
NUMBER OF SEPARATE FGD UNITS	1
SOURCE CAPACITY	60 MW (EQUIVALENT); DESIGN - 300,000 LB/HR STEAM
CONTROL SYSTEM VENDOR	AIRPOL INDUSTRIES
CONTROL PROCESS	CAUSTIC SCRUBBING
NEW / RETROFIT	RETROFIT
START-UP DATE	1973
CONTROL SYSTEM STATUS	OPERATIONAL
SO2 EFFICIENCY	80% - 90%
PARTICULATE EFFICIENCY	94.5% (400 LB/HR AT INLET)
WATER MAKE-UP	OPEN LOOP; 200 GPM-250 GPM SCRUBBING LIQUOR FEED
SLUDGE OR BY-PRODUCT DISPOSAL	WASTEWATER TREATMENT EFFLUENT IS TREATED IN AN ON-SITE SEWAGE TREATMENT PLANT
CONTROL SYSTEM COST	CAPITAL: $100,000 (1973). COST IS FOR ABSORBER ONLY.

BACKGROUND INFORMATION

THE SCRUBBER SYSTEM AT ST. REGIS PAPER LOCATED AT CANTONMENT, FLORIDA WAS MANUFACTURED BY AIRPOL. THE UNIT IS CONSTRUCTED OF 316L STAINLESS STEEL AND HANDLES A TOTAL FLUE GAS VOLUME OF 175,000 ACFM. PARTICULATES ARE CONTROLLED WITH CYCLONES PRECEEDING THE SCRUBBER. SCRUBBER PRESSURE DROP IS APPROXIMATELY 10 INCHES W.G. WITH 80 TO 90% SULFUR DIOXIDE REMOVAL EFFICIENCY. THE SCRUBBER IS FOLLOWED BY A CHEVERON-TYPE MIST ELIMINATOR.

THE BOILER IS RATED AT 60 MW AND PRODUCES 300,000 LBS/HR STEAM. THE TYPICAL SULFUR CONTENT OF THE FUEL (OIL OR BARK, NATURAL GAS IS LESS THAN 1%.

SCRUBBER UNDERFLOW CONSISTS OF ASH AND A SODIUM SULFITE/SULFATE SOLUTION. THE SLUDGE IS DISCHARGED TO AN ON-SITE SEWAGE TREATMENT PLANT.

OPERATING HISTORY

3RD QUARTER-1977 WOOD FIBERS FROM BARK WERE CLOGGING SEPARATORS AND CONTROL VALVES. INSPECTION WAS MADE AND SOLUTION TO PROBLEM IS BEING INVESTIGATED.

4TH QUARTER-1977 AFTER INVESTIGATION OF THE CLOGGING PROBLEM IT WAS DECIDED TO CHANGE THE MAKE-UP UP WATER SOURCE. WATER IS NOW OBTAINED FROM A CLEANER PORTION OF THE PROCESS LOOP. PLANT REPORTS SATISFACTORY OPERATIONS WITH NO OTHER MAJOR PROBLEMS.

2ND QUARTER-1978 PLUGGING DUE TO FIBERS IN THE SCRUBBER FEEDWATER REMAINED TO BE AN UNRESOLVED

SECTION 9 (CONTINUED)

PERFORMANCE DESCRIPTION FOR OPERATIONAL FGD SYSTEMS ON INDUSTRIAL BOILERS

ST. REGIS PAPER CO.; CANTONMENT, FLORIDA (CONTINUED)

PROBLEM DURING THE REPORT PERIOD. PLANT HAD NOT YET CHANGED THE SCRUBBER LIQUOR FEED SOURCE. IN THE JANUARY THROUGH MAY PERIOD, THE BOILER OPERATED 3473 HOURS. SCRUBBER RELIABILITY INDEX WAS NEAR 100 %. THE PLANT INDICATED THAT THIS REPORT HAD BEEN REPORTING TOO HIGH OF A SULFUR CONTENT IN THE FUEL (2-3 %), AS COMPARED TO THE CORRECT VALUE OF LESS THAN 1%.

SECTION 9 (CONTINUED)

PERFORMANCE DESCRIPTION FOR OPERATIONAL FGD SYSTEMS ON INDUSTRIAL BOILERS

INSTALLATION NAME	TEXACO INCORPORATED
INSTALLATION LOCATION	SAN ARDO, CALIFORNIA
SOURCE CHARACTERISTICS	OIL (1.7% SULFUR)
SOURCE RATING	366,000 SCFM (TOTAL - 24 BOILERS)
	26,000 ACFM @ 600F, FOR EACH OF 22 FGD SYSTEMS
	80,000 ACFM @ 600F, FOR EACH OF 2 FGD SYSTEMS
NUMBER OF SEPARATE FGD UNITS	24
SOURCE CAPACITY	140 MW (EQUIVALENT); 1460 MM BTU/HR: TOATL - 24 BOILERS
CONTROL SYSTEM VENDOR	CEILCOTE
CONTROL PROCESS	SODIUM HYDROXIDE SCRUBBING
NEW / RETROFIT	RETROFIT
START-UP DATE	NOVEMBER, 1973
CONTROL SYSTEM STATUS	OPERATIONAL
SO2 EFFICIENCY	73% (1000 PPM @ INLET)
SLUDGE OR BY-PRODUCT DISPOSAL	WASTEWATER TREATMENT
	HALF OF THE SCRUBBER UNDERFLOW IS TREATED AND RECYCLED AS BOILER FEEDWATER; THE OTHER HALF GOES TO WASTEWATER DISPOSAL WELLS.

BACKGROUND INFORMATION

TEXACO USES SEVERAL OIL FIRED BOILERS AT THE SAN ARDO, CALIFORNIA SITE. THE STEAM IS INJECTED IN OIL WELLS TO FACILITATE OIL FLOW. THERE ARE TWO DIFFERENT SIZES OF THE BOILERS: 180 MM BTU/HR (2 NOS), AND 50 MM BTU/HR (31 NOS). THE FUEL OIL HAS A TYPICAL SULFUR CONTENT OF 1.7%.

THE FLUE GASES (80,000 AND 26,000 ACFM FROM EACH BOILER @ 600 F) ARE SCRUBBED BY A FGD SYSTEM SUPPLIED BY CEILCOTE COMPANY IN NOV. '73. EACH BOILER IS FOLLOWED BY A QUENCHING CHAMBER AND A SCRUBBER. THE SCRUBBERS, WHICH ARE HORZONTAL TOWERS PACKED WITH 2 IN. TELLERATE PACKINGS ARE OF SIZES: 15 FT X 15 FT X 20 FT (2 NOS), AND 15 FT X 15 FT X 9 1/2 FT (22 NOS). THE GAS FLOWS ACROSS THE HORZONTAL SCRUBBER WHEREAS THE LIQUID IS SPRAYED PRIMARILY IN A CROSS-CURRENT MODE. THE ABSORBER SECTION IS FOLLOWED BY A SHORTER PACKED DEPTH WHICH SERVES AS THE DEMISTER. THE SCRUBBING LIQUOR IS A MIXTURE OF NATURAL WATER AND 50% NAOH SOLUTION. THE TYPICAL LIQUID MASS FLUX VALUES ARE 2000-3000 LBS/HR FT2. A L/G RATIO OF 14 GAL/1000 SCF IS USED AND PH AT THE INLET IS 8.0. THE FLUE GASES ENTER THE QUENCHERS AT 600 F WITH 1000 PPM SO2 AND LEAVE THE DEMISTERS AT 160 F WITH 270 PPM SO2. THE SPENT LIQUOR IS SPLIT IN TWO STREAMS, ONE RECYLED AS BOILER FEED WATER AFTER REMOVING FLYASH AND SOFTENING, THE OTHER IS DISPOSED OF IN WASTE WATER DISPOSAL WELLS.

THE ABSORBER MODULES, DOWNSTREAM DUCTWORK, STACK AND THE I.D. FAN ARE MADE OF FRP, WHEREAS THE PACKING IS POLY PROPYLENE. THE QUENCHER SECTION IS 316 SS, WHEREAS THE SPENT LIQUOR PIPING, CAUSTIC TANKS, AND THE CAUSTIC FEED LINES ARE MTLD STEEL.

SECTION 9 (CONTINUED)

PERFORMANCE DESCRIPTION FOR OPERATIONAL FGD SYSTEMS ON INDUSTRIAL BOILERS

TEXACO INCORPORATED; SAN ARDO, CALIFORNIA (CONTINUED)

OPERATING HISTORY

THE MAJOR OPERATIONAL PROBLEM AREAS ARE:

1. THE QUENCHER SECTION HAS SUFFERED SEVERE CORROSION DUE TO ACID ATTACK.
2. FRP LINER DETERIORATES DUE TO MECHANICAL ABRASION DURING CLEANING OPERATIONS. IT NEEDS OCCASIONAL RESURFACING.
3. THE PACKED BEDS ARE FREQUENTLY PLUGGED BY FLYASH. THE OIL IN THE NATURAL LIQUOR HAS CAUSED FOULING OF THE PACKED BEDS.
4. OCCASIONAL OVERINJECTION OF CAUSTIC HAS RESULTED IN PLUGGING OF SPRAY NOZZLES BY SCALES.

1ST QUARTER-1978 DUE TO THE LOW SO2 REMOVAL AND HIGH MAINTENANCE COST OF THE ABOVE DESIGN, TEXACO HAS UNDERTAKEN A TEST PROGRAM WHICH, IF SUCCESFUL, WILL PHASE OUT THE PRESENT SCRUBBERS BY THE END OF 1979. FOR MORE INFORMATION ON THE PROGRAM SEE THE OTHER TEXACO, SAN ARDO BACKGROUND INFORMATION ENTRY IN SECTION 10 OF THIS REPORT.

2ND QUARTER-1978 THE AVAILABILITY OF EACH FGD SYSTEM WAS APPROXIMATELY 94 %. ON AN AVERAGE, ONE SYSTEM WAS SHUTDOWN TWO DAYS A MONTH FOR MAINTENANCE.

SECTION 9 (CONTINUED)

PERFORMANCE DESCRIPTION FOR OPERATIONAL FGD SYSTEMS ON INDUSTRIAL BOILERS

INSTALLATION NAME	TEXASGULF
INSTALLATION LOCATION	GRANGER, WYOMING
SOURCE CHARACTERISTICS	OIL (1.1% SULFUR)
SOURCE RATING	140,000 SCFM (TOTAL - 2 BOILERS)
	600,000 LB/HR STEAM (TOTAL)
NUMBER OF SEPARATE FGD UNITS	2
SOURCE CAPACITY	65 MW (EQUIVALENT): TOTAL - 2 BOILERS
CONTROL SYSTEM VENDOR	SWEMCO INC.
CONTROL PROCESS	SODIUM CARBONATE SCRUBBING
NEW / RETROFIT	NEW
START-UP DATE	SEPTEMBER, 1976
CONTROL SYSTEM STATUS	OPERATIONAL
SO2 EFFICIENCY	90% (680 PPM @ INLET)
PARTICULATE EFFICIENCY	99.3% (HOT-SIDE ESP W/PRECEDING MECHANICAL COLLECTOR)
SLUDGE OR BY-PRODUCT DISPOSAL	WASTEWATER TREATMENT

BACKGROUND INFORMATION

TEXASGULF INC. HAS BEEN OPERATING A NEW SODA ASH PLANT (1 MM TONS/YR) AT GRANGER, WYOMING, SINCE SEPTEMBER 1976. THE TWO BOILERS GENERATE A TOTAL OF 600,000 LBS/HR SATURATED STEAM @ 300 PSIG. UNIT EFFICIENCY IS 85% WHEN BURNING WYOMING SUB-BITUMINOUS COAL, WHICH HAS 13.97% MOISTURE, 6.43% ASH, AND .75% SULFUR ON AN AS-RECEIVED BASIS. THE HEATING VALUE OF THE COAL IS 10,424 BTU/LB ON AN AS-RECEIVED BASIS. EACH BOILER BURNS APPROXIMATELY 25,000 LB/HR OF THE COAL.

AFTER FLUE GASES LEAVE THE BOILER, (156,150 ACFM @ 350 F) THEY PASS THROUGH A MECHANICAL COLLECTOR, ESP, ECONOMIZER, AND WET SCRUBBER. THE ECONOMIZER IS LOCATED AFTER THE PRECIPITATER BECAUSE THE ASH FROM WESTERN COAL IS COLLECTED MORE EFFICIENTLY WHEN THE GAS IS HOT. THE CYCLONE AND ESP TOGETHER HAVE A PARTICULATE REMOVAL EFFICIENCY OF 99.3%. THE SCRUBBING SYSTEM, WHICH WAS INSTALLED DOWNSTREAM OF THE ECONOMIZER BY SWEMCO INC. ALONG WITH THE NEW PLANT IN SEPT. '76, CONSISTS OF A QUENCHER, A SIEVE TRAY ABSORBER (15 FT DIA X 20.5 FT HIGH) AND A BYPASS. FLUE GAS IS SPRAY COOLED FROM 350 F TO 125 F AS IT ENTERS THE QUENCHER AND IS DIRECTED INTO THE CIRCULATING LIQUOR IN THE RESEVOIR. THE GAS BUBBLES UP THROUGH THE LIQUOR, ENTERS THE ADJACENT ABSORBER AND TRAVELS UP THROUGH TWO SIEVE TRAYS. SCRUBBING LIQUOR (7000 GPM TO THE ABSORBER, 300 GPM TO THE QUENCHER) IS RECIRCULATED FROM THE SCRUBBER PUMP TANK WHICH RECEIVES THE SCRUBBER EFFLUENT (1023 GPM). A CONSTANT BLEED-OFF (250 TO 487 LB/MIN) CONTAINING 8% OF SODIUM SALTS IS PURGED TO A HOLDING POND FOR EVAPERATION. A CHEVRON-TYPE DEMISTER IS USED. THE CLARIFIED MAKEUP WATER (60 TO 93 GPM) IS USED FOR DEMISTER WASHING (15 GPM) AND QUENCHER SPRAY (45 TO 66 GPM). MAKEUP SODA ASH LIQUOR, 30% BY WEIGHT, IS FEED FROM A LIQUOR HEAD TANK TO THE SCRUBBER PUMP TANK AT A MINIMUM RATE OF 56 LB/MIN AND MAX. RATE OF 119 LB/MIN.

SECTION 9 (CONTINUED)

PERFORMANCE DESCRIPTION FOR OPERATIONAL FGD SYSTEMS ON INDUSTRIAL BOILERS

TEXASGULF; GRANGER, WYOMING (CONTINUED)

EACH ABSORBER IS DIVIDED VERTICALLY INTO TWO SECTIONS, ONE OF WHICH HAS A DAMPER AT THE TOP. THIS PERMITS CURTAILMENT OF GAS FLOW THROUGH HALF OF THE UNITS AT LOW LOADS. THE ABSORBER, THEREFORE, CAN OPERATE AT THE DESIGN EFFICIENCY WHEN THE BOILER PRODUCES FROM 25% TO 100% OF ITS RATED OUTPUT. THE ABSORBER BYPASS ALLOWS UPTO 25% OF THE INCOMING HOT FLUE GAS TO BE DIVERTED. TYPICALLY, TEXASGULF USES THE BYPASS TO KEEP THE FLUE GAS IN THE STACK 10 F WARMER THAN THAT AT THE SCRUBBER OUTLET. THE SCRUBBERS ARE MADE OF 316 L SS, THE TRAYS ARE UDDEHOLM 904-L, THE PUMP TANKS ARE FRP AND THE STACK (7.5 FT ID X 150 FT HIGH) IS DOUBLE-WALL, INSULATED STEEL TYPE WITH FLAKELINE COATING BY CEILCOTE COMPANY.

OPERATING HISTORY

1ST QUARTER-1978 THE OUTLET DUCTWORK, WHICH IS CORRODED DUE TO ACID CONDENSATE, WILL BE REPLACED. THE SYSTEM OPERATED WITHOUT ANY MAJOR PROBLEMS.

2ND QUARTER-1978 DURING A MAJOR ELECTRICAL TURNAROUND, THE SCRUBBER MODULES WERE CLEANED AND REPAIRED, SLUDGE FROM THE TRAYS WAS REMOVED AND THE OUTLET DUCTWORK WAS REPLACED BY 304 SS. THE SO2 MEASURING INSTRUMENTS WERE BEING UPGRADED BY LEAR SIEGLER, THE SUPPLIER.

SECTION 10

DESIGN INFORMATION FOR UNDER CONSTRUCTION FGD SYSTEMS ON INDUSTRIAL BOILERS

INSTALLATION NAME	CATERPILLAR TRACTOR CO.
INSTALLATION LOCATION	MAPLETON, ILLINOIS
SOURCE CHARACTERISTICS	COAL (3.2% SULFUR)
SOURCE RATING	157,000 SCFM (TOTAL - 3 BOILERS)
	80,000 ACFM @ 350 F, FOR EACH OF 3 FGD SYSTEMS
NUMBER OF SEPARATE FGD UNITS	3
SOURCE CAPACITY	100 MW (EQUIVALENT); TOTAL - 3 BOILERS
CONTROL SYSTEM VENDOR	FMC ENVIRONMENTAL EQUIPMENT
CONTROL PROCESS	DOUBLE ALKALI (CONCENTRATED)
NEW / RETROFIT	NEW
START-UP DATE	OCTOBER, 1978
CONTROL SYSTEM STATUS	CONSTRUCTION
SO2 EFFICIENCY	90% (2000 PPM @ INLET)
SLUDGE OR BY-PRODUCT DISPOSAL	DEWATERED SLURRY TO LANDFILL
	60+% SOLIDS (CASO4) SLUDGE DIRECTLY TO LANDFILL

BACKGROUND INFORMATION

AT THE MAPLETON, ILLINOIS PLANT, CATERPILLAR TRACTOR IS INSTALLING TWO NEW BOILER PLANTS WHICH WILL BE COMPLETED BY THE EARLY 1980'S. PLANS CALL FOR THE ERECTION OF EIGHT BOILERS, EACH RATED AT ABOUT 200,000 LBS/HR STEAM. THE TOTAL STEAM GENERATING CAPACITY WILL BE 1,650,000 LBS/HR STEAM. THREE OF THESE BOILERS WILL BE COMPLETED BY THE 1978-79 HEAT SEASON. TWO MORE WILL COME ON-LINE DURING THE 1979-1980 HEAT SEASON. THE START-UP DATES FOR THE OTHER THREE HAVE NOT YET BEEN DETERMINED. CATERPILLAR HAS AWARDED A CONTRACT TO FMC ENVIRONMENTAL EQUIPMENT TO PROVIDE CONCENTRATED MODE DUAL ALKALI FGD SYSTEMS FOR ALL EIGHT BOILERS.

THERE ARE TWO CATERPILLAR FACILITIES AT MAPLETON, LOCATED NEXT TO EACH OTHER. THERE WILL BE FOUR BOILERS AT EACH FACILITY. EACH BOILER WILL HAVE A SEPARATE FGD SYSTEM. THE 4 FMC SYSTEMS AT EACH FACILITY WILL SHARE REGERATION FACILITIES, VACUUM FILTER, AND SLUDGE DISPOSAL. EACH FGD TRAIN WILL BE TREATING APPROXIMATELY 80,000 ACFM @ 350 F.

OPERATING HISTORY

3RD QUARTER-1977 SYSTEM WAS UNDER CONSTRUCTION. START-UP WAS EXPECTED LATE IN THE FALL OF 1977.

4TH QUARTER-1977 CONSTRUCTION DELAYS ON THE STEAM GENERATION SIDE PUSHED PLANT START-UP BACK TO THE FALL OF 1978.

2ND QUARTER-1978 START-UP WAS STILL PLANNED FOR THE 1978-1979 HEATING SEASON. THREE BOILERS AND THEIR INDIVIDUAL FMC FGD SYSTEMS WILL COME ON-LINE AT THAT TIME.

SECTION 10 (CONTINUED)

DESIGN INFORMATION FOR UNDER CONSTRUCTION FGD SYSTEMS ON INDUSTRIAL BOILERS

INSTALLATION NAME	GETTY OIL COMPANY
INSTALLATION LOCATION	BAKERSFIELD, CALIFORNIA
SOURCE CHARACTERISTICS	CRUDE OIL (1.1% SULFUR)
SOURCE RATING	993,750 SCFM (TOTAL-72 BOILERS)
	9 FGD SYSTEMS, EACH TREATING 200,000 ACFM @ 500 F
NUMBER OF SEPARATE FGD UNITS	9
SOURCE CAPACITY	3600 MM BTU/HR, 310-MW EQUIVALENT (TOTAL-72 BOILERS)
	EACH BOILER RATED AT 42,000 LBS/HR STEAM
CONTROL SYSTEM VENDOR	PROPRIATARY DESIGN
CONTROL PROCESS	SODIUM CARBONATE SCRUBBING
NEW / RETROFIT	RETROFIT
START-UP DATE	DECEMBER, 1978
CONTROL SYSTEM STATUS	CONSTRUCTION
SO_2 EFFICIENCY	96% (70 PPM SO2 AT OUTLET)
SLUDGE OR BY-PRODUCT DISPOSAL	WASTEWATER TREATMENT AND DISCHARGE TO TAILINGS POND
CONTROL SYSTEM COST	CAPITAL: $ 500,000 (1978) FOR EACH SYSTEM. THIS INCLUDES COST OF SCRUBBER,SODA ASH TANK,PIPING, AND PUMPS. THE COST DOES NOT INCLUDE STACK, DUCTWORK, OVERHEADS, AND ENGINEERING
	OPERATING: $0.16/MM BTU OR $ 580,000/YR FOR EACH SYSTEM. THIS IS BASED ON 340 DAYS/YR. THE COST INCLUDES ELECTRICAL, SCRUBBER MAINTENANCE, AND SODA ASH.

SECTION 10 (CONTINUED)

DESIGN INFORMATION FOR UNDER CONSTRUCTION FGD SYSTEMS ON INDUSTRIAL BOILERS

INSTALLATION NAME	GREAT WESTERN SUGAR
INSTALLATION LOCATION	FREEMONT,OHIO
SOURCE CHARACTERISTICS	COAL (3% SULFUR)
SOURCE RATING	40,000 SCFM @ 70 F (TOTAL - 2 BOILERS)
	140,000 LB/HR STEAM (TOTAL - 2 BOILERS)
NUMBER OF SEPARATE FGD UNITS	2
CONTROL SYSTEM VENDOR	GREAT WESTERN SUGAR
CONTROL PROCESS	SODIUM CARBONATE SCRUBBING
NEW / RETROFIT	RETROFIT
START-UP DATE	OCTOBER, 1978
CONTROL SYSTEM STATUS	CONSTRUCTION
SO2 EFFICIENCY	
SLUDGE OR BY-PRODUCT DISPOSAL	WASTEWATER TREATMENT AND DISCHARGE TO CITY SEWER

SECTION 10 (CONTINUED)

DESIGN INFORMATION FOR UNDER CONSTRUCTION FGD SYSTEMS ON INDUSTRIAL BOILERS

INSTALLATION NAME	MOBIL OIL COMPANY
INSTALLATION LOCATION	BUTTONWILLOW, CALIFORNIA
SOURCE CHARACTERISTICS	OIL (1.1% SULFUR)
SOURCE RATING	42,000 SCFM (TOTAL - 7 BOILERS)
	7 FGD SYSTEMS, EACH TREATING 11,400 ACFM @ 550F.
NUMBER OF SEPARATE FGD UNITS	7
SOURCE CAPACITY	20 MW (EQUIVALENT); 175 MM BTU/HR (TOTAL - 7 BOILERS)
CONTROL SYSTEM VENDOR	HEATER TECHNOLOGY
CONTROL PROCESS	SODIUM CARBONATE SCRUBBING
NEW / RETROFIT	RETROFIT
START-UP DATE	SEPTEMBER, 1978
CONTROL SYSTEM STATUS	CONSTRUCTION
SO2 EFFICIENCY	85% (500 PPM @ INLET)
WATER MAKE-UP	15 GPM; OIL FIELD WASTE WATER
SLUDGE OR BY-PRODUCT DISPOSAL	HOLDING POND FOR EVAPORATION
	INTERMITTENT BLOWDOWN TO WASTE DISPOSAL SITE.
CONTROL SYSTEM COST	CAPITAL: $500,000 (1978). THIS COST INCLUDES ABSORBER MODULES, RECYCLE TANKS, STACK, DEMISTERS, PUMPS, AND PIPING. IT DOES NOT INCLUDE CAUSTIC TANK, FEED PUMPS, OR FEED PIPES.

BACKGROUND INFORMATION

MOBIL OIL HAS PURCHASED SEVEN HEATER TECHNOLOGY EDUCTOR SCRUBBER SYSTEMS FOR THE CONTROL OF SO2.

SECTION 10 (CONTINUED)

DESIGN INFORMATION FOR UNDER CONSTRUCTION FGD SYSTEMS ON INDUSTRIAL BOILERS

INSTALLATION NAME	ST. JOE ZINC CO.
INSTALLATION LOCATION	MONACA, PENNSYLVANIA
SOURCE CHARACTERISTICS	COAL (2.5%-4.5% SULFUR)
SOURCE RATING	104,000 SCFM (TOTAL - 1 BOILER)
NUMBER OF SEPARATE FGD UNITS	1
SOURCE CAPACITY	60 MW (MINIMAL PEAK CAPACITY)
CONTROL SYSTEM VENDOR	BUREAU OF MINES
CONTROL PROCESS	CITRATE PROCESS
NEW / RETROFIT	RETROFIT
START-UP DATE	OCTOBER, 1978
CONTROL SYSTEM STATUS	CONSTRUCTION
SO2 EFFICIENCY	90+%
SLUDGE OR BY-PRODUCT DISPOSAL	REGENERABLE - ELEMENTAL SULFUR PRODUCT
CONTROL SYSTEM COST	CAPITAL: $12,700,000 (1977). THIS PROJECT IS BEING JOINTLY FUNDED BY ST. JOE ZINC, THE US EPA, AND THE BUREAU OF MINES.

BACKGROUND INFORMATION

IN THE SUMMER OF 1977, CONSTRUCTION BEGAN AT MONACA, PA. ON A CITRATE PROCESS (BUREAU OF MINES) FGD SYSTEM FOR ONE OF THE TWO 60-MW (NOMINAL PEAK CAPACITY) BOILERS OF THE GEORGE F. WEATON POWER PLANT USED BY ST. JOE ZINC CO. TO GENERATE ELECTRICITY FOR A ZINC SMELTER. ST. JOE HAS A RECIPRICAL AGREEMENT WITH THE LOCAL UTILITY COMPANY, DUQUESNE LIGHT, WHEREBY ST. JOE CAN SELL UP TO 25-MW OF ITS TOTAL 120-MW CAPACITY TO DUQUESNE. IN RETURN ST. JOE CAN BUY SUFFICIENT POWER TO MAINTAIN SMELTING OPERATIONS IN THE EVENT OF AN EMERGENCY. IT IS THE FIRST SMALL COMMERCIAL SIZE EXPERIMENTAL CITRATE CONTROL SYSTEM BEING BUILT FOR SCRUBBING SULFUR DIOXIDE OUT OF COAL-FIRED POWER PLANT STACK GAS.

UNDER A $12.7 MILLION COST-SHARING AGREEMENT BETWEEN THE BUREAU AND ST. JOE, COSTS FOR TESTING THE CITRATE PROCESS FOR A FULL YEAR ARE BEING SHARED ABOUT 50-50. THE CITRATE PROCESS WAS DEVELOPED BY THE BUREAU IN THE 1960'S TO HELP CURB SULFUR DIOXIDE EMISSIONS FROM BASE METAL SMELTERS.

THE CITRATE PROCESS DERIVES ITS NAME FROM THE WATER SOLUTION OF SODIUM CITRATE AND CITRIC ACID USED TO ABSORB SO2 CONTAINED IN THE FLUE GAS. ADDING HYDROGEN SULFIDE TO THE CITRATE-SO2 SOLUTION PRECIPITATES SOLID ELEMENTAL SULFUR, WHICH IS EASY TO SHIP AND CAN BE SOLD TO HELP OFFSET COSTS, OR STORED WITHOUT CAUSING DETRIMENTAL EFFECTS ON THE ENVIRONMENT.

SECTION 10 (CONTINUED)

DESIGN INFORMATION FOR UNDER CONSTRUCTION FGD SYSTEMS ON INDUSTRIAL BOILERS

INSTALLATION NAME	TEXACO INCORPORATED
INSTALLATION LOCATION	SAN ARDO, CALIFORNIA
SOURCE CHARACTERISTICS	OIL (1.7% SULFUR)
SOURCE RATING	117,000 SCFM (TOTAL - 9 BOILERS)
	26,000 ACFM @ 600 F, FOR EACH OF 9 BOILERS.
NUMBER OF SEPARATE FGD UNITS	3
SOURCE CAPACITY	50 MW (EQUIVALENT); 50 MM BTU/HR/BOILER
CONTROL SYSTEM VENDOR	DUCON COMPANY
CONTROL PROCESS	SODIUM CARBONATE SCRUBBING
NEW / RETROFIT	RETROFIT
START-UP DATE	MARCH, 1979
CONTROL SYSTEM STATUS	CONSTRUCTION
SO2 EFFICIENCY	95% (1000 PPM @ INLET)
SLUDGE OR BY-PRODUCT DISPOSAL	SCRUBBER EFFLUENT DISPOSED OF IN WASTE WELLS

BACKGROUND INFORMATION

TEXACO IS PLANNING TO PHASE OUT THE EXISTING FGD SYSTEMS AT THE SAN ARDO OIL FACILITY. AS THE FIRST STEP OF THE PROGRAM, 9 OF THE PRESENT 33 SCRUBBERS ON THE 50 MM BTU/HR STEAM GENERATORS ARE BEING REPLACED BY A NEW SYSTEM.

THE NEW FGD SYSTEM IS BEING SUPPLIED BY DUCON COMPANY AND WILL BE OPERATIONAL BY MARCH 1979. THE SYSTEM CONSISTS OF THREE TRAINS OF VENTURI SCRUBBERS AND HORIZONTAL SPRAY TOWERS. THE FLUE GASES FROM 9 STEAM GENERATORS WILL BE MANIFOLDED INTO THE SYSTEM (234,000 ACFM @ 600F). EACH TRAIN CAN TREAT 50% OF THE DESIGN LOAD AND CAN BE ISOLATED FROM THE FLUE GAS STREAM. IT IS HOPED THAT THIS SYSTEM DESIGN WILL YIELD SIGNIFICANTLY HIGHER AVAILABILITIES THAN THE DESIGN CURRENTLY IN USE. (FOR FURTHER INFORMATION, SEE THE OTHER TEXACO, SAN ARDO, BACKGROUND INFORMATION ENTRY IN SECTION 9 OF THIS REPORT). THIS SYSTEM WILL UTILIZE A SODIUM CARBONATE TECHNOLOGY FOR SO2 REMOVAL.

THE COMPLETION OF THE PHASE-OUT PROGRAM IS CONTINGENT UPON THE OPERATING SUCCESS OF THE SYSTEM AND ANY NOX REGULATIONS WHICH MAY BE PROMULGATED.

SECTION 11

DESIGN INFORMATION FOR PLANNED FGD SYSTEMS ON INDUSTRIAL BOILERS

INSTALLATION NAME	ARCO/POLYMERS, INC.
INSTALLATION LOCATION	MONACA, PENNSYLVANIA
SOURCE CHARACTERISTICS	COAL (3.0% SULFUR)
SOURCE RATING	236,000 SCFM (TOTAL - 3 BOILERS)
	900,000 LB/HR STEAM @ 700 PSIG AND 700 F.
NUMBER OF SEPARATE FGD UNITS	3
SOURCE CAPACITY	118 MW (EQUIVALENT); TOTAL - 3 BOILERS
CONTROL SYSTEM VENDOR	FMC ENVIRONMENTAL EQUIPMENT
CONTROL PROCESS	DOUBLE ALKALI (CONCENTRATED)
NEW / RETROFIT	RETROFIT
START-UP DATE	JUNE, 1980
CONTROL SYSTEM STATUS	PLANNED-CONTRACT AWARDED
SO2 EFFICIENCY	90% (2,300 PPM @ INLET)
PARTICULATE EFFICIENCY	99.5%
SLUDGE OR BY-PRODUCT DISPOSAL	DEWATERED SLURRY TO LANDFILL
	FLYASH ADDITION TO DEWATERED CASO3/CASO4 FILTER CAKE,
	THEN TO LANDFILL.
CONTROL SYSTEM COST	CAPITAL: $8,000,000 (1978). THIS TOTAL INSTALLED COST
	INCLUDES EQUIPMENT, INSTALLATION, DUCTWORK, STACK, PIPING,
	COST OF THE FGD SYSTEM, ENGINEERING, START-UP, AND TESTING.
	INSTRUMENTATION, ENGINEERING, AND OVERHEADS.
	OPERATING: PROJECTED COSTS ARE NOT YET AVAILABLE.

SECTION 11 (CONTINUED)

DESIGN INFORMATION FOR PLANNED FGD SYSTEMS ON INDUSTRIAL BOILERS

INSTALLATION NAME	C.A.M.(CARBIDE-AMOCO-MONSANTO)
INSTALLATION LOCATION	HOUSTON, TEXAS
SOURCE CHARACTERISTICS	NOT SELECTED
SOURCE RATING	1,200,000 SCFM (1 BOILER)
	600 MW (EQUIVALENT); 1 BOILER
NUMBER OF SEPARATE FGD UNITS	1
CONTROL SYSTEM VENDOR	NOT SELECTED
CONTROL PROCESS	NOT SELECTED
NEW / RETROFIT	NEW
START-UP DATE	OCTOBER, 1983
CONTROL SYSTEM STATUS	PLANNED-CONSIDERING SO2 CONTROL
SO2 EFFICIENCY	NOT DETERMINED
SLUDGE OR BY-PRODUCT DISPOSAL	DISPOSAL TECHNIQUE NOT KNOWN

BACKGROUND INFORMATION

UNION CARBIDE, AMOCO, AND MONSANTO HAVE ENTERED INTO A JOINT VENTURE (C.A.M.), WHICH WILL HAVE A COGENERATION FACILITY NEAR HOUSTON,TEXAS. THE 600-MW (EQUIVALENT) BOILER WILL PRODUCE ELECTRICITY AND PROCESS STEAM FOR THE NEARBY PLANTS OF THE THREE COMPANIES.

THE TYPE OF FUEL TO BE USED IS NOT FINALIZED. HOWEVER, A FGD SYSTEM IS DEFINITELY BEING CONSIDERED. STARTUP FOR THE POWER GENERATING FACILITY IS SCHEDULED FOR LATE 1983.

SECTION 11 (CONTINUED)

DESIGN INFORMATION FOR PLANNED FGD SYSTEMS ON INDUSTRIAL BOILERS

INSTALLATION NAME	CARBORUNDUM ABRASIVES
INSTALLATION LOCATION	BUFFALO, NEW YORK
SOURCE CHARACTERISTICS	COAL (2% S AVERAGE, 3.2% S DESIGN MAX)
SOURCE RATING	38,000 ACFM @ 350 F
	60,000 - 85,000 LBS/HR STEAM (PROCESS AND HEATING STEAM)
NUMBER OF SEPARATE FGD UNITS	1
SOURCE CAPACITY	10 MW (EQUIVALENT)
CONTROL SYSTEM VENDOR	CARBORUNDUM ENVIR. SYS. LTD.
CONTROL PROCESS	LIME SCRUBBING
NEW / RETROFIT	RETROFIT
START-UP DATE	
CONTROL SYSTEM STATUS	PLANNED-CONTRACT AWARDED
SO2 EFFICIENCY	92%
SLUDGE OR BY-PRODUCT DISPOSAL	WASTEWATER TREATMENT AND DISCHARGE TO CITY SEWER

BACKGROUND INFORMATION

NO DEFINITE PLANS HAVE BEEN MADE FOR THE CONTROL OF SO2 EMISSIONS FROM THIS BOILER. THE FUTURE OF THE CONTROL SYSTEM WILL BE DETERMINED BY A REGULATORY AGENCY DECISION EXPECTED NEAR THE END OF 1978. THE CURRENTLY OPERATING VENTURI (L/G = 10) CONTROLS ONLY PARTICULATE, BUT TIE-INS HAVE BEEN PROVIDED FOR A LIME SCRUBBING SYSTEM USING A 6-STAGE SPRAY TOWER FOR SO2 CONTROL.

OPERATING HISTORY

2ND QUARTER-1978 PLANT REPORTED NO CHANGE.

SECTION 11 (CONTINUED)

DESIGN INFORMATION FOR PLANNED FGD SYSTEMS ON INDUSTRIAL BOILERS

INSTALLATION NAME	CHEVERON U.S.A. INC.
INSTALLATION LOCATION	BAKERSFIELD, CALIFORNIA
SOURCE CHARACTERISTICS	OIL (1.1% SULFUR)
SOURCE RATING	146,000 SCFM (TOTAL - 12 BOILERS)
	2 FGD SYSTEMS, EACH TREATING 150,000 ACFM @ 500F.
NUMBER OF SEPARATE FGD UNITS	2
SOURCE CAPACITY	600 MM BTU/HR (TOTAL - 12 BOILERS; 6 BOILERS/FGD SYSTEM)
CONTROL SYSTEM VENDOR	NOT SELECTED
CONTROL PROCESS	SODIUM CARBONATE SCRUBBING
NEW / RETROFIT	RETROFIT
START-UP DATE	APRIL, 1979
CONTROL SYSTEM STATUS	PLANNED-REQUESTING/EVALUATING BIDS
SO2 EFFICIENCY	90% (680 PPM @ INLET)
SLUDGE OR BY-PRODUCT DISPOSAL	WASTEWATER TREATMENT

SECTION 11 (CONTINUED)

DESIGN INFORMATION FOR PLANNED FGD SYSTEMS ON INDUSTRIAL BOILERS

INSTALLATION NAME	GRISSOM AIR FORCE BASE
INSTALLATION LOCATION	BUNKER HILL, INDIANA
SOURCE CHARACTERISTICS	COAL (0.9% - 4.6% SULFUR)
SOURCE RATING	32,000 SCFM (TOTAL - 3 BOILERS)
	15 MW (EQUIVALENT); TOTAL - 3 BOILERS
NUMBER OF SEPARATE FGD UNITS	1
CONTROL SYSTEM VENDOR	NOT SELECTED
CONTROL PROCESS	DOUBLE ALKALI (CONCENTRATED)
NEW / RETROFIT	1 NEW 2 RETROFIT
START-UP DATE	SEPTEMBER, 1979
CONTROL SYSTEM STATUS	PLANNED-REQUESTING/EVALUATING BIDS
SO2 EFFICIENCY	
SLUDGE OR BY-PRODUCT DISPOSAL	DEWATERED SLURRY TO LANDFILL
CONTROL SYSTEM COST	CAPITAL: $1,800,000 - $2,000,000 (1978). THIS IS THE PROJECTED TOTAL INSTALLED COST.

BACKGROUND INFORMATION

AT GRISSOM AIR FORCE BASE NEAR BUNKER HILL, INDIANA, THE AIR FORCE HAS INITIATED A PROJECT WHICH INCLUDES THE ERECTION OF A NEW COAL-FIRED BOILER AND AN FGD SYSTEM FOR THE NEW UNIT AND TWO EXISTING COAL-FIRED UNITS. THE AMOUNT OF CAPITAL ALLOCATED FOR THE EMISSIONS CONTROL SYSTEM IS IN THE $1.8 - $2.0 MILLION RANGE. THE NAVY IS THE MILITARY CONSTRUCTION AGENT FOR THE PROJECT. ARNOLD M. DIAMOND HAS THE OVERALL CONSTRUCTION CONTRACT AND FOSDICK AND HILMER (CINCINNATI) IS THE A-E FIRM FOR THE FGD PORTION OF THE PROJECT.

THE A-E FIRM HAS SPECIFIED A CONCENTRATED DOUBLE ALKALI SYSTEM FOR THE CONTROL APPROACH. FLUE GAS FROM EACH BOILER WILL PASS THROUGH A MECHANICAL COLLECTOR. THE GAS FROM ALL THREE BOILERS WILL THEN BE MANIFOLDED TOGETHER AND PASS THROUGH TWO PARALLEL ABSORBER TRAINS, EACH TRAIN CAPABLE OF HANDLING 50% OF THE FLUE GAS. THE MAXIMUM FLOW RATE IS 32,000 SCFM (145,000 LB/HR OF GAS).

THE BOILERS FIRE APPROXIMATELY 40% EXCESS AIR. COAL MAY RANGE FROM 0.9% - 4.6% SULFUR AND WILL HAVE AN AVERAGE HEATING VALUE OF 11,500 BTU/LB. THE A-E FIRM HAS SPECIFIED THAT THE MAXIMUM SO2 OUTLET CONCENTRATION WILL BE 1.2 LB/MM BTU, AND THE MAXIMUM PARTICULATE AT THE OUTLET WILL BE 0.171 LB/MM BTU.

PROJECT COMPLETION IS SCHEDULED FOR AUGUST 30, 1978.

SECTION 12

DESCRIPTION OF INDUSTRIAL BOILER FGD SYSTEMS NOT OPERATING

INSTALLATION NAME	BUNGE, INC.
INSTALLATION LOCATION	CAIRO, ILLINOIS
SOURCE CHARACTERISTICS	COAL (3% SULFUR)
SOURCE RATING	44,000 SCFM (TOTAL - 2 BOILERS)
	81,400 ACFM @ 520 F
NUMBER OF SEPARATE FGD UNITS	1
SOURCE CAPACITY	20 MW (EQUIVALENT); TOTAL - 2 BOILERS
	180,000 LBS/HR STEAM (TOTAL)
CONTROL SYSTEM VENDOR	DRAVO CORP./NAT'L LIME ASS'N
CONTROL PROCESS	LIME SCRUBBING
NEW / RETROFIT	RETROFIT
START-UP DATE	
CONTROL SYSTEM STATUS	TERMINATED
SO2 EFFICIENCY	94% (2700 PPM INLET)
SLUDGE OR BY-PRODUCT DISPOSAL	DEWATERED SLURRY TO LANDFILL
CONTROL SYSTEM COST	CAPITAL COST: $1,000,000 (1977). INCLUDES: TOTAL INSTALLED COST OF THE FGD SYSTEM, ENGINEERING, START-UP, AND TESTING.

BACKGROUND INFORMATION

BUNGE PURCHASED THIS LIME SCRUBBING SYSTEM FOR TESTING PURPOSES. THE LEWIS SCRUBBER, WHICH IS A HORIZONTAL ROTARY VESSEL WITH INTERNAL MAINS, PERFORMED VERY WELL DURING THE TEST (94 PERCENT SO2 REMOVAL). PRESENTLY, BUNGE IS USING LOW SULFUR COAL (.9 PERCENT) AND DOES NOT PLAN TO USE THE SYSTEM.

SECTION 12 (CONTINUED)

DESCRIPTION OF INDUSTRIAL BOILER FGD SYSTEMS NOT OPERATING

INSTALLATION NAME	GREAT WESTERN SUGAR
INSTALLATION LOCATION	LONGMONT, COLORADO
SOURCE CHARACTERISTICS	COAL (0.7% SULFUR)
SOURCE RATING	
NUMBER OF SEPARATE FGD UNITS	2
CONTROL SYSTEM VENDOR	GREAT WESTERN SUGAR
CONTROL PROCESS	AMMONIA-LADEN PROCESS WATER
NEW / RETROFIT	RETROFIT
START-UP DATE	OCTOBER, 1973
CONTROL SYSTEM STATUS	TERMINATED
SO2 EFFICIENCY	35% (300-400 PPM @ INLET)
SLUDGE OR BY-PRODUCT DISPOSAL	WASTEWATER TREATMENT AND DISCHARGE TO RIVER

SECTION 12 (CONTINUED)

DESCRIPTION OF INDUSTRIAL BOILER FGD SYSTEMS NOT OPERATING

INSTALLATION NAME	HARRIS MINING CO.
INSTALLATION LOCATION	SPRUCE PINE, NORTH CAROLINA
SOURCE CHARACTERISTICS	COAL (0.8% SULFUR)
SOURCE RATING	4,000 SCFM (TOTAL - 2 BOILERS)
NUMBER OF SEPARATE FGD UNITS	2
SOURCE CAPACITY	2 MW (EQUIVALENT); TOTAL - 2 BOILERS
CONTROL SYSTEM VENDOR	W.W. SLY MANUFACTURING CO.
CONTROL PROCESS	WATER SCRUBBING (NA,NH3 OPTN.)
NEW / RETROFIT	RETROFIT
START-UP DATE	1973
CONTROL SYSTEM STATUS	TERMINATED
SO2 EFFICIENCY	
PARTICULATE EFFICIENCY	96%
SLUDGE OR BY-PRODUCT DISPOSAL	DISPOSAL TECHNIQUE NOT KNOWN
CONTROL SYSTEM COST	CAPITAL: $51,000 (1973). THIS IS THE TOTAL INSTALLED CO

BACKGROUND INFORMATION

THE FGD SYSTEM AT THE HARRIS MINING COMPANY LOCATED AT SPRUCE PINE, NORTH CAROLINA REMOVES FLY-ASH AND SULFUR DIOXIDE FROM THE FLUE GAS OF A COAL FIRED BOILER. THE SCRUBBER IS A W.W. SLY IMPINGENT TYPE SCRUBBER CONSTRUCTED OF 304 STAINLESS STEEL. THE BOILER IS RATED 1.9 MW (EQUIVALENT 200 BOILER HORSEPOWER). COAL COMPOSITION IS TYPICALLY 0.8% SULFUR AND 5% ASH. PRIMARY INTEREST IN FLUE GAS SCRUBBING IS IN FLYASH REMOVAL AND NO TESTS FOR SULFUR DIOXIDE REMOVAL EFFICIENCY HAVE BEEN MADE.

OPERATING HISTORY

2ND QUARTER-1977 NO OPERATIONAL PROBLEMS HAVE BEEN REPORTED.

1ST QUARTER-1978 THIS PLANT HAS BEEN MOVED TO THE INACTIVE SYSTEMS FILE UNTIL SUCH TIME AS ACTUAL FGD OPERATIONS BEGIN. THE SCRUBBER IS EQUIPPED WITH ALKALI ADDITION CAPABILITY, BUT WITH THE LOW SULFUR COAL CURRENTLY BEING FIRED, NO ALKALI ADDITION OR PH CONTROL IS OCCURRING.

2ND QUARTER-1978 PLANT REPORTED NO CHANGE.

SECTION 12 (CONTINUED)

DESCRIPTION OF INDUSTRIAL BOILER FGD SYSTEMS NOT OPERATING

INSTALLATION NAME	QUALITY MILLS, INC.
INSTALLATION LOCATION	MT. AIRY, NORTH CAROLINA
SOURCE CHARACTERISTICS	FUEL OIL
SOURCE RATING	
NUMBER OF SEPARATE FGD UNITS	0
SOURCE CAPACITY	5 MW (EQUIVALENT)* TOTAL - THREE BOILERS
	52,000 LB/HR STEAM
CONTROL SYSTEM VENDOR	COMMERCIAL FABRICATION & MAC
CONTROL PROCESS	WATER SCRUBBING
NEW / RETROFIT	RETROFIT
START-UP DATE	MAY, 1970
CONTROL SYSTEM STATUS	TERMINATED
SO2 EFFICIENCY	47% (600-800 PPM @ INLET)
PARTICULATE EFFICIENCY	80%-95% (0.05-0.16 GRAIN/SCF @ INLET)
WATER MAKE-UP	40 GPM* OPEN LOOP
SLUDGE OR BY-PRODUCT DISPOSAL	WASTEWATER TREATMENT AND DISCHARGE TO CITY SEWER
	SCRUBBING LIQUOR DISCHARGED TO NEUTRALIZATION POND

SECTION 12 (CONTINUED)

DESCRIPTION OF INDUSTRIAL BOILER FGD SYSTEMS NOT OPERATING

INSTALLATION NAME	TRANSCO TEXTILES, INC.
INSTALLATION LOCATION	AUGUSTA, GEORGIA
SOURCE CHARACTERISTICS	FUEL OIL (2% MAX. SULFUR)
SOURCE RATING	50,000 ACFM
NUMBER OF SEPARATE FGD UNITS	0
SOURCE CAPACITY	20 MW
CONTROL SYSTEM VENDOR	FMC ENVIRONMENTAL EQUIPMENT
CONTROL PROCESS	SODIUM CARBONATE SCRUBBING
NEW / RETROFIT	NEW
START-UP DATE	MARCH, 1975
CONTROL SYSTEM STATUS	TERMINATED
SO2 EFFICIENCY	80%-85% (610 LB/HR @ INLET)
WATER MAKE-UP	48 GPM* OPEN LOOP
SLUDGE OR BY-PRODUCT DISPOSAL	WASTEWATER TREATMENT AND DISCHARGE TO RIVER NA2SO3/SO4 LIQUOR DISCHARGED TO A HOLDING POND

SECTION 12 (CONTINUED)

DESCRIPTION OF INDUSTRIAL BOILER FGD SYSTEMS NOT OPERATING

INSTALLATION NAME	U.S. GYPSUM CORP.
INSTALLATION LOCATION	OAKMONT, PENNSYLVANIA
SOURCE CHARACTERISTICS	COAL
SOURCE RATING	
NUMBER OF SEPARATE FGD UNITS	0
SOURCE CAPACITY	19,300 SCFM (TOTAL - 4 BOILERS)
CONTROL SYSTEM VENDOR	AIRPOL INDUSTRIES
CONTROL PROCESS	DOUBLE ALKALI (DILUTE)
NEW / RETROFIT	NEW
START-UP DATE	
CONTROL SYSTEM STATUS	TERMINATED
SO2 EFFICIENCY	MEETS CODE
PARTICULATE EFFICIENCY	MEETS CODE
WATER MAKE-UP	10 GPM* CLOSED LOOP
SLUDGE OR BY-PRODUCT DISPOSAL	DEWATERED SLURRY TO LANDFILL SLUDGE TO POND FOR DRYING. THEN TO LANDFILL.

SECTION 13

PROCESS DIAGRAMS FOR INDUSTRIAL BOILER FGD SYSTEMS

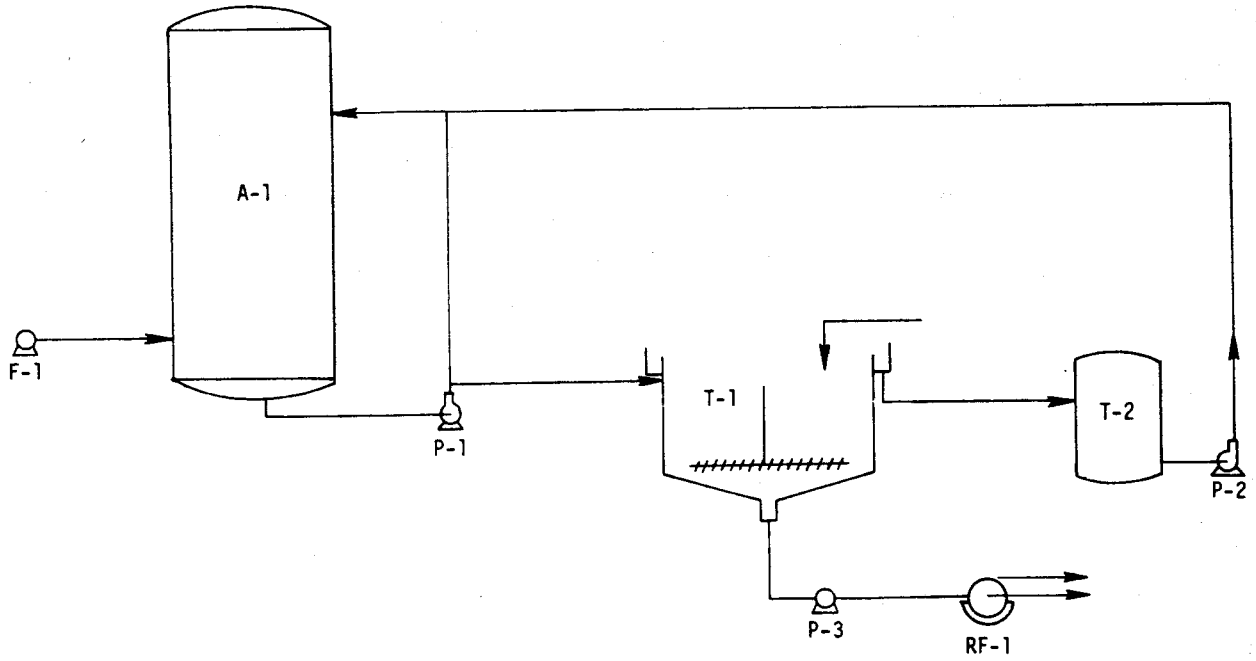

FIGURE 13-1. PROCESS DIAGRAM FOR CATERPILLER TRACTOR, JOLIET INDUSTRIAL BOILER FGD SYSTEM

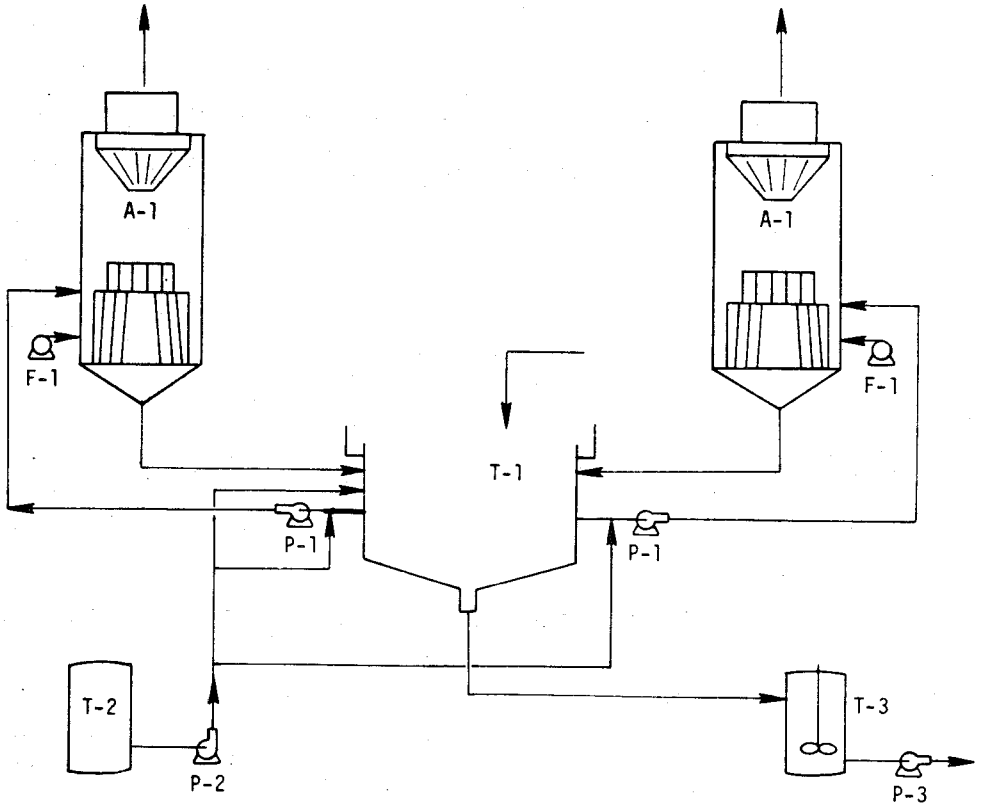

FIGURE 13-2. PROCESS DIAGRAM FOR GENERAL MOTORS, DAYTON INDUSTRIAL BOILER FGD SYSTEM

EQUIPMENT LIST

Equipment no.	Name	Size, feet	Material of construction	No.
A-1	Absorber	6 diameter x 10 high	316L SS	2
F-1	F.D. fan	35,000 scfm, 9 in. WG	Carbon steel	2
P-1	Recirculation pump	200 gpm, 25 head	Carbon steel, rubber-lined	3
P-2	Caustic pump	80 gpm	Carbon steel	1
P-3	Bleed off pump	50 gpm	Carbon steel, rubber-lined	2
T-1	Recycle tank	7.5 diameter x 12 high	316L SS	1
T-2	Caustic tank	9 diameter x 18 high	Carbon steel	1
T-3	Bleed off tank	6 diameter x 6.5 high	316L SS	1

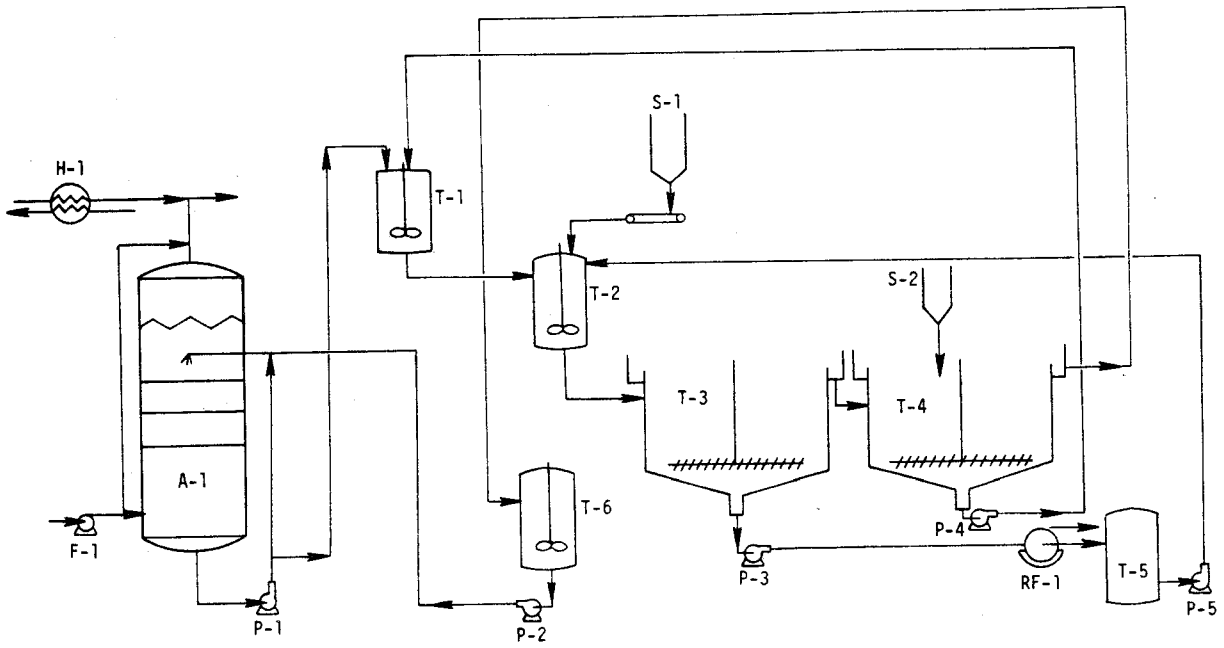

FIGURE 13-3. PROCESS DIAGRAM FOR GENERAL MOTORS, PARMA INDUSTRIAL BOILER FGD SYSTEM

EQUIPMENT LIST

Equipment no.	Name	Size, feet	Material of construction	No.
A-1	Absorber	10.5 diameter x 22.5 high	316L SS	4
F-1	F.D. fan	200 hp, 12 in. WG	Carbon steel	4
H-1	Reheater			4
P-1	Recirculation pump		Carbon steel, rubber-lined	4
P-2	Recirculation pump			2
P-3	Underflow pump		Carbon steel, rubber-lined	1
P-4	Underflow pump		Carbon steel, rubber-lined	1
P-5	Filtrate pump			1
RF-1	Rotary vacuum filter	500 square feet area	Carbon steel, polypropylene cloth	2
S-1	Lime silo		Carbon steel	2
S-2	Soda ash silo		Carbon steel	1
T-1	Chemical mix tank	5000 gallons	Carbon steel	1
T-2	Chemical mix tank	5000 gallons	Carbon steel	2
T-3	Clarifier #1	60 diameter x 14 high		1
T-4	Clarifier #2	60 diameter x 14 high		1
T-5	Filtrate tank	4 diameter x 7 high	Carbon steel	1
T-6	Recirculation tank		Carbon steel, tar coating	4

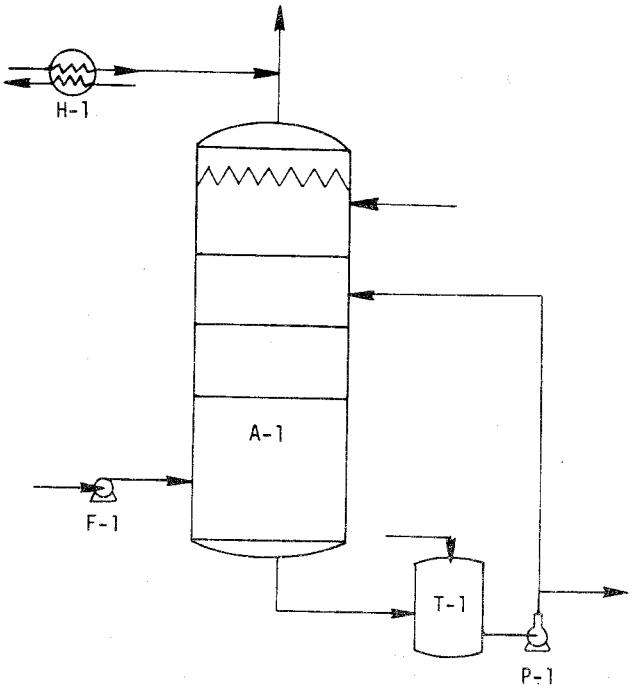

FIGURE 13-4. PROCESS DIAGRAM FOR KERR-McGEE, TRONA INDUSTRIAL BOILER FGD SYSTEM

EQUIPMENT LIST

Equipment no.	Name	Size, feet	Material of construction	No.
A-1	Absorber	30 diameter x 35 high	Carbon steel, fiberglass lined, 316L SS trays	2
F-1	F.D. fan		Carbon steel	2
H-1	Reheater	50°F reheat	Carbon steel	2
P-1	Recirculation pump	125 gpm	Carbon steel, rubber-lined	2
T-1	Recirculation tank			2

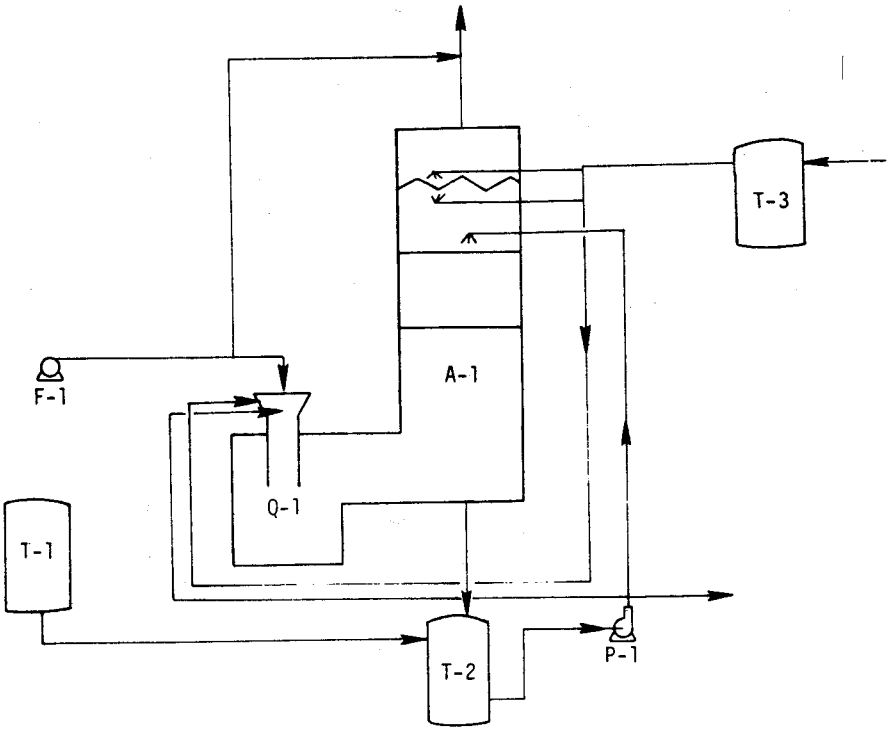

FIGURE 13-5. PROCESS DIAGRAM FOR TEXASGULF, GRANGER INDUSTRIAL BOILER FGD SYSTEM

EQUIPMENT LIST

Equipment no.	Name	Size, feet	Material of construction	No.
A-1	Absorber	15.0 diameter x 20.5 high	316L SS, trays Inconel 625	1
F-1	F.D. fan			
P-1	Recirculation pump	550 gpm @ 15 psig		2
Q-1	Quencher			1
T-1	Liquor head tank			1
T-2	Recirculation tank			1
T-3	Head tank			1

TECHNICAL REPORT DATA
(Please read Instructions on the reverse before completing)

1. REPORT NO. EPA-600/7-78-052b	2.	3. RECIPIENT'S ACCESSION NO.
4. TITLE AND SUBTITLE EPA INDUSTRIAL BOILER FGD SURVEY: Second Quarter 1978		5. REPORT DATE July 1978
		6. PERFORMING ORGANIZATION CODE
7. AUTHOR(S) J. Tuttle, A. Patkar, N. Gregory, and M. Eckstein		8. PERFORMING ORGANIZATION REPORT NO.
9. PERFORMING ORGANIZATION NAME AND ADDRESS PEDCo. Environmental, Inc. 11499 Chester Road Cincinnati, Ohio 45246		10. PROGRAM ELEMENT NO. EHE624
		11. CONTRACT/GRANT NO. 68-02-2603, Task 36
12. SPONSORING AGENCY NAME AND ADDRESS EPA, Office of Research and Development Industrial Environmental Research Laboratory Research Triangle Park, NC 27711		13. TYPE OF REPORT AND PERIOD COVERED Task Final; 4-6/78
		14. SPONSORING AGENCY CODE EPA/600/13

15. SUPPLEMENTARY NOTES IERL-RTP project officer is R. Michael McAdams, Mail Drop 61, 919/541-2915.

16. ABSTRACT The report presents detailed technical information concerning application of flue gas desulfurization (FGD) systems to industrial boilers. Design and operation data has been obtained from 152 separate FGD control systems, with a capacity of 8.3 million acfm (2200 MW equivalent). An average of more than six FGD units per year have come on line since 1972, indicating FGD to be a viable method of controlling SO2 emissions. The information was obtained by a survey of plant personnel, control system vendors, regulatory agencies, and consulting engineering firms. The data is given in two types of tables: one gives summary information; the other, detailed information. Summary tables present information as a function of control process, control system vendor, disposal techniques, operation status, start-up date, and flue gas capacity. Detailed information includes: control system design, economics, operating experience, problems and solutions, waste disposal techniques, and maintenance practices.

17. KEY WORDS AND DOCUMENT ANALYSIS

a. DESCRIPTORS		b. IDENTIFIERS/OPEN ENDED TERMS	c. COSATI Field/Group	
Pollution	Pulping	Pollution Control	13B	13H
Flue Gases	Chemical Industry	Stationary Sources	21B	
Desulfurization		Industrial Boilers	07A, 07D	
Boilers			13A	
Waste Disposal			15E	
Maintenance				

18. DISTRIBUTION STATEMENT Unlimited	19. SECURITY CLASS *(This Report)* Unclassified	21. NO. OF PAGES 124
	20. SECURITY CLASS *(This page)* Unclassified	22. PRICE

EPA Form 2220-1 (9-73)