United States
Environmental Protection
Agency

EPA-600/7-81-083
April 1981

EPA

Research and Development

EPA Industrial Boiler
FGD Survey--1979

Prepared for

Office of Air Quality Planning and Standards
Regional Offices 1 - 10

Prepared by

Industrial Environmental Research
Laboratory
Research Triangle Park NC 27711

RESEARCH REPORTING SERIES

Research reports of the Office of Research and Development, U.S. Environmental Protection Agency, have been grouped into nine series These nine broad categories were established to facilitate further development and application of environmental technology. Elimination of traditional grouping was consciously planned to foster technology transfer and a maximum interface in related fields. The nine series are:

1. Environmental Health Effects Research
2. Environmental Protection Technology
3. Ecological Research
4. Environmental Monitoring
5. Socioeconomic Environmental Studies
6. Scientific and Technical Assessment Reports (STAR)
7. Interagency Energy-Environment Research and Development
8. "Special" Reports
9. Miscellaneous Reports

This report has been assigned to the INTERAGENCY ENERGY-ENVIRONMENT RESEARCH AND DEVELOPMENT series. Reports in this series result from the effort funded under the 17-agency Federal Energy/Environment Research and Development Program. These studies relate to EPA's mission to protect the public health and welfare from adverse effects of pollutants associated with energy systems. The goal of the Program is to assure the rapid development of domestic energy supplies in an environmentally-compatible manner by providing the necessary environmental data and control technology. Investigations include analyses of the transport of energy-related pollutants and their health and ecological effects; assessments of, and development of, control technologies for energy systems; and integrated assessments of a wide range of energy-related environmental issues.

EPA REVIEW NOTICE

This report has been reviewed by the participating Federal Agencies, and approved for publication. Approval does not signify that the contents necessarily reflect the views and policies of the Government, nor does mention of trade names or commercial products constitute endorsement or recommendation for use.

This document is available to the public through the National Technical Information Service, Springfield, Virginia 22161.

EPA-600/7-81-083
April 1981

DCN 81-203-001-13-16

SPECIAL REPORT

EPA INDUSTRIAL BOILER FGD SURVEY - 1979

by

Jay R. Hoover
RADIAN CORPORATION
8501 Mo-Pac Boulevard
Austin, Texas 78759

EPA Contract No. 68-02-3171, Task 13

Project Officer: J. David Mobley

Industrial Environmental Research Laboratory
Office of Environmental Engineering and Technology
Research Triangle Park, North Carolina 27711

Prepared for:

U.S. ENVIRONMENTAL PROTECTION AGENCY
Office of Research and Development
Washington, D.C. 20460

U.S. Environmental Protection Agency
Region 5, Library (5PL-16)
230 S. Dearborn Street, Room 1670
Chicago, IL 60604

ABSTRACT

This Special Report presents the results of a project sponsored by EPA's Industrial Environmental Research Laboratory to survey vendors and operators of flue gas desulfurization (FGD) systems applied to industrial boilers for the 1979 calendar year. It was found that 123 FGD units were operated throughout 1979. Sodium systems (once through) accounted for 102 of these units and 74 of these sodium systems were applied to small oil-fired steam generators in the California oil fields. The second most prevalent FGD process was the dual alkali system typically used on large coal-fired boilers located primarily in Illinois and Ohio. In addition, there were 98 planned industrial boiler FGD units, most of which are once through sodium systems applied to oil field steam generators. The performance data (SO_2 removal) for once through sodium units is high, with all reporting systems achieving greater than 95 percent removal. The lime/limestone units achieved 85 to 92 percent SO_2 removal, with the dual alkali units averaging greater than 90 percent SO_2 removal. Reported reliability for FGD units at seven sites averaged about 95 percent with sodium systems generally achieving greater than and lime/limestone systems less than 95 percent.

CONTENTS

Abstract..... ii

1. Introduction..... 1

2. Results..... 3

2.1 Applications..... 3

2.2 Performance and Reliability..... 11

Appendix A Detailed Data Summaries..... 16

Appendix B Process Descriptions and Flow Diagrams..... 24

FIGURES

Number		Page
1	Growth in number and installed capacity of industrial boiler FGD units, 1972-1979	4
B-1	Sodium scrubbing FGD system	26
B-2	Dual alkali FGD system	28
B-3	Lime or limestone FGD system	31
B-4	Spray drying FGD system	33

TABLES

Number		Page
1	FGD System Applications to Industrial Boiler	5
2	FGD System Applications by Industry and State	7
3	Fuel/Capacity Breakdown for Existing FGD Units	9
4	Summary of Waste Disposal Practices by System Type	10
5	FGD System Vendors	12
6	Reported Performance Data for Existing FGD Units	13
7	Reported Reliability Data for Existing FGD Units	14
A-1	Units Operating Throughout 1979	17
A-2	Units Planned, Under Construction, or Started Up in 1979	20
A-3	Units that Terminated Operation or Changed Status in 1979	23

SECTION 1

INTRODUCTION

The objectives of this project, sponsored by EPA's Industrial Environmental Research Laboratory in Research Triangle Park, North Carolina, are to: 1) survey vendors and operators of industrial boiler flue gas desulfurization (FGD) systems concerning performance and design data, and 2) evaluate and report the collected data for both operating and planned units. The information presented for each plant site includes 1) company name and location, 2) number of boilers and FGD units, 3) boiler fuel type and sulfur content, 4) FGD unit type, capacity and startup date, 5) FGD unit waste disposal practices, and 6) performance characteristics such as SO_2 removal capability and reliability. This report summarizes the results of the survey for the 1979 calendar year. The status of FGD units in operation throughout 1979 is reported and the FGD units that were purchased, under construction, started up, or terminated during the year are described.

A series of quarterly reports on industrial boiler FGD systems was previously compiled for EPA by PEDCo Environmental, Inc. The last report published in that series was EPA-600/7-79-067b, April 1979. That series of reports has been replaced by a series of Special Reports which will present recent information in abbreviated form. These reports, prepared by Radian Corporation, will be updated annually. It should be noted that information regarding utility boiler FGD systems is presented in a separate report series (Reference EPA-600/7-80-029).

To obtain the information contained in this report, vendors and operators of FGD systems were contacted. Vendors were asked to provide lists of new units which were started up or under construction in 1979. Operators of new facilities as well as operators of previously identified

units (whose names were provided by EPA) were also contacted. Information requested for both operating and planned units included: 1) location and status; 2) actual or projected startup date; 3) number of boilers and FGD units; 4) FGD system type and capacity; 5) type of boiler fuel and sulfur content; and 6) design SO_2 removal capability. In addition, actual performance data for SO_2 removal efficiency and system reliability were requested for the operating units.

Thirty-eight out of fifty-nine companies (64 percent) contacted responded to the survey. For those companies not responding to the current survey, information presented in earlier surveys or in the open literature is reported where appropriate.

EPA actively solicits updated information on the implementation and performance of industrial boiler FGD systems. Information for inclusion in future reports should be sent to Jay R. Hoover, Radian Corporation, Post Office Box 9948, Austin, Texas 78766, or J. David Mobley, U. S. Environmental Protection Agency, MD-61, Research Triangle Park, North Carolina 27711.

SECTION 2

RESULTS

This section presents the results of the industrial boiler FGD survey. The trends in application of FGD technology to industrial boilers are discussed in Section 2.1 while performance data (SO_2 removal efficiency and reliability) for operating units are presented in Section 2.2. All of the information collected during the survey is tabulated in Appendix A. The data for existing industrial boiler FGD units operating throughout 1979 are summarized in Table A-1. Table A-2 presents information on units planned, under construction, or started up in 1979, while Table A-3 summarizes information for units that terminated operation or changed status in 1979*. Appendix B provides brief process descriptions and flow diagrams for the more prevalent FGD processes, i.e., sodium scrubbing (once through), dual alkali, lime/limestone, and spray drying.

2.1 APPLICATIONS

This survey identified that there were 123 industrial boiler FGD units that operated throughout 1979. In addition, 98 were either planned, under construction, or started up in 1979. Figure 1 illustrates the growth in the number and installed capacity of industrial boiler FGD units for the period 1972 through 1979. This figure shows that the average installed capacity per unit has increased significantly over this period. Several very large units (>100,000 scfm) installed on coal-fired boilers during 1977-1978 contributed to this trend. The breakdown between the different types of FGD processes applied to industrial boilers is presented in Table 1. This table shows that most of the existing and planned FGD applications to industrial boilers are once through sodium systems. The second most

*Compared to the listing in EPA-600/7-79-067b. This publication reported FGD unit status in the first quarter of 1979.

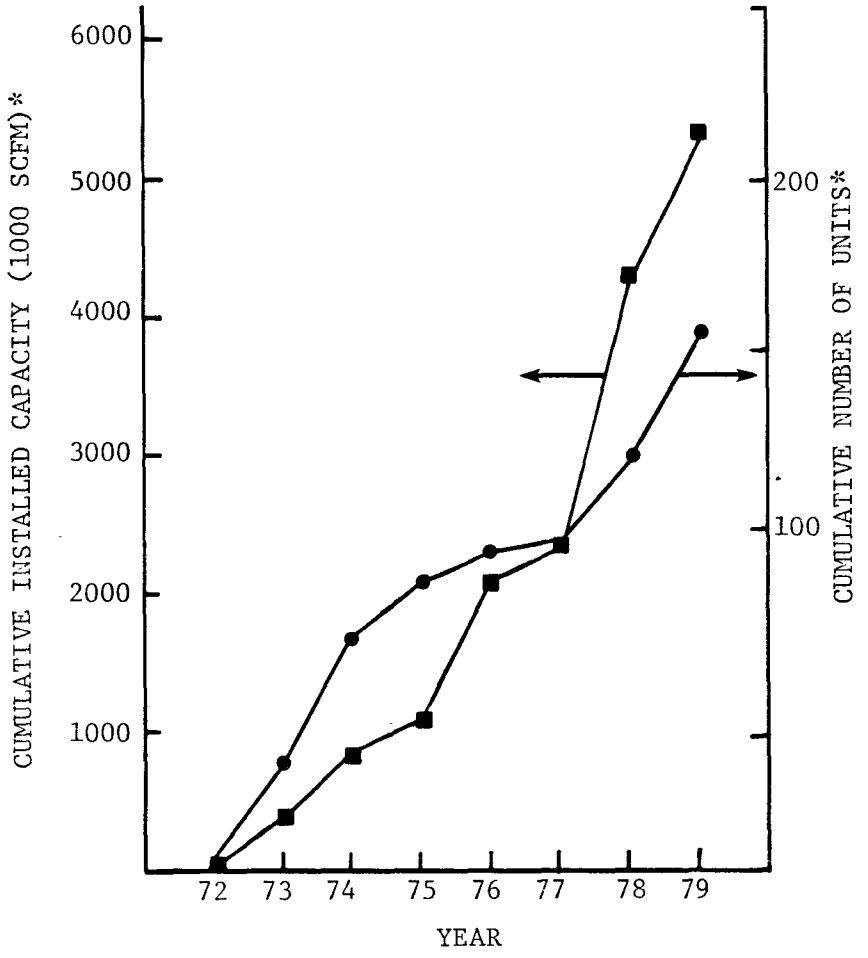

Figure 1. Growth in number and installed capacity of Industrial Boiler FGD Units, 1972-1979.

*Includes only those units that were operating throughout 1979. Does not include units that were shut down prior to 1979.

TABLE 1. FGD SYSTEM APPLICATIONS TO INDUSTRIAL BOILERS

System Type	Existing* Units	Planned**Units
Sodium Scrubbing (once through)	102	81
Dual Alkali	17	10
Lime/Limestone	2	1
Spray Drying	-	2
Ammonia	2	1
Sulf-X	-	1
Undecided	-	2
TOTALS	123	98

* Operating throughout 1979.
**Planned, under construction, or started up in 1979.

prevalent type of FGD system used on industrial boilers is the dual alkali process.

The use of FGD systems in industrial applications is not as widespread as Table 1 implies. Table 2 shows that most of the industrial boiler FGD applications are concentrated in a few industrial groups. For example, of the 123 existing FGD units identified, 74 are installed on steam generators used in California for thermally-enhanced oil recovery operations.* Sixty-seven of these are located at three oil field sites. Over 95 percent of these oil field applications are once through sodium units. The liquid waste from these sodium scrubbers is generally disposed of in evaporation ponds or by well injection. For many applications outside of the oil fields, the liquid waste will require more extensive treatment prior to disposal. Therefore, process complexity and cost may increase significantly and it is expected that once through sodium systems will not find the same widespread use in other applications.

For non-oil field applications, General Motors and Caterpillar Tractor are leaders in demonstrating FGD technology for coal-fired industrial boilers, while the pulp and paper industry has experimented with using waste alkaline streams to achieve SO_2 removal in scrubbers designed primarily for particulate removal. Experience with industrial boiler FGD technology is lacking in most other industrial sectors as there are only 17 operational FGD units outside of the industry groups discussed above. Table 2 also shows the states that contain most of the industrial boiler FGD systems. Seven states have over 90 percent of the existing units. California has the largest number due to stringent environmental standards and the thermally-enhanced oil recovery operations. Illinois has the second largest number of units and Ohio ranks third. This is due in part to the high sulfur coal reserves in these states and the efforts of General Motors and Caterpillar Tractor to utilize this coal in an environmentally acceptable manner. Other states have less than five units each and many have no systems at all.

---

*Steam is injected into producing zones to facilitate heavy oil production. Lease crude is fired in small steam generators and scrubbers are required for SO_2 control from new facilities.

TABLE 2. FGD SYSTEM APPLICATIONS BY INDUSTRY AND STATE

Industrial Groups	Number of Units Existing*	Number of Units Planned**	Applications by State	Number of Units Existing*	Number of Units Planned**
Oil Companies					
TEOR Applications***	74	80	California	79	79
			Illinois	13	5
General Motors	14	-	Ohio	7	-
			New York	4	1
Caterpillar Tractor	12	5	Wyoming	4	1
			Arkansas	3	-
Pulp/Paper	6	4	Georgia	3	-
			Other	10	12
Chemical Companies	7	4		123	98
Other	10	5			
	123	98			

* Operating throughout 1979.
**Planned, under construction, or started up in 1979.
***Thermally-enhanced oil recovery.

Table 3 presents an analysis of existing industrial boiler FGD units by fuel type and capacity. This table illustrates several significant trends. The once through sodium system, which is the most prevalent, finds primary application to small oil-fired steam generators. Sodium hydroxide is used as the scrubbing medium for these units, while sodium carbonate is used for most of the larger sodium units. These units are less complex and therefore require lower capital investment than other FGD processes. However, chemical costs for sodium carbonate or sodium hydroxide are high. Therefore, for small capacity applications to boilers firing low-to-medium sulfur fuels*, sodium systems will generally be preferred unless waste disposal costs are prohibitively expensive.

Once through sodium systems, primarily sodium hydroxide, are also the most prevalent FGD processes applied to small coal-fired boilers. For large coal-fired boilers, dual alkali units are the most prevalent. The equipment required to regenerate the expensive sodium alkali in the dual alkali process can be economically justified for large-scale facilities (see Appendix B for descriptions of sodium scrubbing and dual alkali processes).

Several once through sodium units on large coal-fired installations use a plant waste stream containing sodium to achieve SO_2 reduction. These units are typically particulate scrubbers with a waste alkaline liquor added for SO_2 removal. An example of this waste stream is the caustic stream from the pulp bleaching stage in pulp/paper mills. Most of these applications are in the pulp/paper industry. These installations typically recycle the waste stream to other plant processes or treat it prior to discharge.

All of the existing or planned FGD systems produce a liquid or solid waste stream requiring disposal. Table 4 summarizes the waste disposal practices for the existing industrial boiler FGD units. The most prevalent disposal techniques for once through sodium units are evaporation in holding

*The oil burned in steam generators typically contains 1-2 wt.% sulfur. Uncontrolled SO_2 emissions are about 1-2 lb $SO_2/10^6$Btu.

TABLE 3. FUEL/CAPACITY BREAKDOWN FOR EXISTING* FGD UNITS

Capacity	≤ 32,000 scfm**		> 32,000 scfm**	
Fuel Type	Coal	Oil	Coal	Oil
Sodium Scrubbing (once through)				
Waste Stream	1	-	5	-
NaOH	9	60	4	3
Na_2CO_3	-	-	4	16
Dual Alkali	4	-	13	-
Lime/Limestone	-	-	2	-
Other	-	-	2	-

* Operating throughout 1979.

**32,000 scfm is the estimated volume of flue gas produced by firing approximately 100×10^6 Btu/hr of coal or 145×10^6 Btu/hr of oil.

TABLE 4. SUMMARY OF WASTE DISPOSAL PRACTICES BY SYSTEM TYPE*

System Type/Disposal Practice	Number of Existing**Units
ONCE THROUGH SODIUM	
Holding pond for evaporation	45
Deep-well injection	29
Wastewater treatment and discharge to sewer, river or tailings pond	21
Alkaline scrubbing liquor recycled to other processes	3
Unknown	4
DUAL ALKALI	
Dewatered slurry to landfill	17
LIME/LIMESTONE	
Non-fixated slurry to lined pond	1
Dewatered slurry to landfill	1
AMMONIA	
Wastewater treatment	2

*Based on EPA-600/7-79-0676

**Operating throughout 1979.

ponds, well injection, and wastewater treatment. All of the dual alkali systems use landfill for the dewatered slurry or sludge. This technique is also used for one of the lime/limestone units, while the other lime/limestone facility discharges the waste solids from the thickener to a lined disposal pond. The two ammonia scrubbing processes use wastewater treatment consisting of anaerobic digestion, followed by an open pond, followed by aerobic digestion.

There are many vendors that license industrial boiler FGD systems. Table 5 lists the vendors which supplied/will supply the systems for the operating/planned industrial boiler FGD applications.

2.2 PERFORMANCE AND RELIABILITY

Few data concerning actual performance and reliability were obtained from operators during this survey. Table 6 presents the reported performance data while Table 7 summarizes the available reliability data. Reliability is defined as the hours the FGD unit was operated, divided by the hours it was called upon to operate.

Actual performance data were reported or obtained for only 24 of the 123 existing units*. The data presented in Table 6 show that the SO_2 removal capability of the once through sodium units is high, with all reporting systems achieving greater than 95 percent removal. The two lime/limestone units achieved removals of 85 and 91.5 percent. The two dual alkali units achieved greater than 90 percent SO_2 removal based on continuous monitoring tests.

Reliability data were reported for only 20 of the 123 existing units. Based on these limited data, the following observations can be made:
1) the reliability reported for the 16 once through sodium units was high,

*The reported performance data presented were obtained from either continuous on-line monitoring or wet chemical analysis (EPA Method 6). The continuous monitoring data were obtained by EPA in 1979-1980 to provide technical background for the ongoing Industrial Boiler NSPS activities.

TABLE 5. FGD SYSTEM VENDORS

Vendor*	Type of System**	Number of Units**** Planned	Operating
A. D. Little	SS	-	2
Andersen	SS	4	-
CE Natco	SS	2	1
Ceilcote	SS	-	29
Combustion Equipment Assoc.	SS	-	2
Ducon Company	SS	6	-
Entoleter, Inc.	SS	-	2
Flakt, Inc.	SS	1	-
FMC Environmental Equipment	SS,DA	8	17
Heater Technology	SS	52	1
Koch Engineering	SS,AM	6	7
Mikropul Corp.	SD	1	-
Neptune Airpol, Inc.	SS,DA,AM	7	8
Pittsburgh Environment & Energy Systems, Inc.	SX	1	-
Research-Cottrell/Bahco	LS	-	1
Wheelabrator-Frye/Rockwell Int.	SD	1	-
SWEMCO, Inc.	SS	-	2
Thermotics, Inc.	SS	5	1
W. W. Sly Manufacturing Co.	SS	1	-
Zurn Industries	DA	-	4
Carborundum Abrasives***	L	1	-
General Motors***	SS	-	6
Getty Oil Co.***	SS	2	11
Mobil Oil Co.***	SS	-	28
Pfizer, Inc.***	L	-	1
		98	123

* For units planned or operating throughout 1979

** SS = Sodium Scrubbing (once through)
DA = Dual Alkali
SD = Spray Drying
L = Lime
LS = Limestone
AM = Ammonia
SX = Sulf-X

***These companies have developed capabilities within their own organizations for FGD system design.

****Operating means operating throughout 1979. Planned means planned, under construction, or started up in 1979.

TABLE 6. REPORTED PERFORMANCE DATA FOR EXISTING* FGD UNITS

	Number of FGD Units	Total Capacity scfm	Process Type**	Boiler Fuel	lb $SO_2/10^6$ Btu at scrubber exit	Percent SO_2 Removal***
Rickenbacker Air National Guard****	1	55,000	Lime/ Limestone	Coal 3.6% S	0.44	91.5[a]
Texas Gulf Chemicals	2	140,000	Waste soda ash	Coal 0.75% S	0.01	99.8[b]
Alyeska Pipeline Service Co.	1	50,000	Sodium hydroxide	Diesel Oil 0.07% S	0.013	96.0[b]
Getty Oil Co. Cat Canyon Field	1	5,000	Sodium hydroxide	Oil 4.0% S	0.07	98.0[b]
Minn-Dak Farmers Cooperative	2	164,000	Ammonia	Lignite 1.0% S	DNR	95.0[b]
Kerr-McGee Chemical Corp.	1	245,000	Sodium carbonate	Coke, coal, oil: 0.5-5.0% S	DNR	99.1[b]
	1	245,000	Sodium carbonate	Coke, coal, oil: 0.5-5.0% S	DNR	98.1[b]
Pfizer, Inc.	1	100,000	Lime	Coal 3.5% S	0.83	85.0[b]
Getty Oil Kern River Field	10	891,000	Soda ash	Oil 1.0% S	0.04	97.0[b]
General Motors-St. Louis	1	64,000	Sodium hydroxide	Coal 3.2% S	0.2	96.0[a]
General Motors-Parma	1	38,000	Dual alkali	Coal 2.5% S	0.33	91.3[a]
	1	26,000	Dual alkali	Coal 2.5% S	0.24	93.8[a]
Mead Paperboard	1	100,000	Sodium carbonate	Oil 1.5-3.0% S	DNR	96.0[a]

* Units that operated throughout 1979.
** For once through sodium systems, the makeup sodium alkali is specified (where known) i.e., sodium hydroxide, sodium carbonate, soda ash, etc.
*** Method of determining performance:
a = On-line continuous monitoring instrumentation. Data taken in 1979-1980.
b = EPA Method 6
**** Continuous monitoring data was taken with lime being used as the sorbent.
DNR - Data not reported.

TABLE 7. REPORTED RELIABILITY DATA FOR EXISTING* FGD UNITS

Installation Name	Number of FGD Units	Total Capacity scfm	Process Type**	Boiler Fuel	Reliability*** percent 1	2	3	4	Yr
Rickenbacker Air National Guard	1	55,000	Lime/ Limestone	Coal 3.6% S	98	94	96	25	78.3
Texas Gulf Chemicals Co.	2	140,000	Waste Soda Ash	Coal 0.75% S	100	100	100	100	100
Minn-Dak Farmers Coop.	2	164,000	Ammonia	Lignite 1.0% S	97.8	100	94.4	98.5	97.7
Nekoosa Papers	2	211,000	Caustic Waste	Coal 1.0-1.5% S	100	100	98	100	99.5
Kerr-McGee Chemical Corp.	2	490,000	Sodium Carbonate	Coke,coal,oil 0.5-5.0% S	100	100	100	100	100
Pfizer, Inc.	1	100,000	Lime	Coal 3.5% S	94.0	95.0	90.0	89.0	92.0
Getty Oil Co. Kern River Field	10	891,000	Soda Ash	Oil 1.0% S	100	DNR	DNR	98.9	98.9

*Units that operated throughout 1979.

**For once through sodium systems, the makeup sodium alkali is specified (where known), i.e., sodium hydroxide, sodium carbonate, soda ash, etc.

***Reliability data, given for each quarter and the year, is defined as:

$$\frac{\text{the hours the FGD unit operated}}{\text{the hours the FGD unit was called upon to operate}} \times 100\%$$

DNR - Data not reported.

generally greater than 98 percent; 2) the lime/limestone units reported 6 of 8 quarterly reliabilities of 90 percent or higher; 3) the two ammonia systems reported greater than 97 percent reliability for the year. No reliability data were reported for dual alkali systems.

APPENDIX A

DETAILED DATA SUMMARIES

TABLE A-1. UNITS OPERATING THROUGHOUT 1979

Company Name and Location (Vendor)	Start-Up Date	Number of Boilers	Number of FGD Units	Capacity (scfm)	Process Type**	Boiler Fuel	Design SO_2 Removal Efficiency, %
General Motors Corporation St. Louis, MO (A. D. Little)	0/72	2	2	64,000 total	Sodium hydroxide	Coal 3.2% S	90
*Texaco, Inc. San Ardo, CA (Ceilcote)	11/73	29	29	347,000 total	Sodium hydroxide	Oil 1.7% S	73
*Mobil Oil Company San Ardo, CA (In-House Design)	0/74	28	28	175,000 total	Sodium hydroxide	Oil 2.0-2.25% S	90
General Motors Corporation Parma, OH (GM Environmental)	3/74	4	4	128,000 total	Dual alkali (dilute)	Coal 2.5% S	90
*Canton Textiles Canton, GA (FMC Environmental Equipment)	6/74	1	1	25,000	Caustic waste	Coal 0.8% S	70
Caterpillar Tractor Company Joliet, IL (Zurn Industries)	9/74	2	2	67,000 total	Dual alkali (dilute)	Coal 3.2% S	90
General Motors Corporation Dayton, OH (Entoleter, Inc.)	9/74	2	2	55,400 total	Sodium hydroxide	Coal 0.7-1.3% S	85
*Firestone Tire and Rubber Company Pottstown, PA (FMC Environmental Equipment)	1/75	1	1	8,070	Dual alkali (concentrated)	Coal 2.5-3.0% S	90.5
*Great Southern Paper Company Cedar Spring, GA (Neptune Airpol, Inc.)	0/75	2	2	420,000 total	Caustic waste stream	Bark, oil, coal 1.0-2.0% S	85-99
*ITT Rayonier, Inc. Fernandes Beach, CA (Neptune Airpol, Inc.)	0/75	4	2	176,000 total	Sodium hydroxide	Bark, oil 2.0-2.5% S	85
Mead Paperboard Company Stevenson, AL (Neptune Airpol, Inc.)	0/75	2	1	100,000	Sodium carbonate	Oil 1.5-3.0% S	95

(Continued)

* Based on EPA 600/7-79-067b

** For once through sodium systems, the makeup sodium alkali is specified (where known), i.e., sodium hydroxide, sodium carbonate, soda ash, etc.

DNR - Data not reported

TABLE A-1. UNITS OPERATING THROUGHOUT 1979 (Continued)

Company Name and Location (Vendor)	Start-Up Date	Number of Boilers	Number of FGD Units	Capacity (scfm)	Process Type**	Boiler Fuel	Design SO_2 Removal Efficiency, %
General Motors Corporation Tonowanda, NY (FMC Environmental Equipment)	6/75	4	4	132,700 total	Sodium hydroxide	Coal 1.2% S	90
*Georgia Pacific Crossett, AR (Neptune Airpol, Inc.)	6/75	1	1	220,000	Caustic waste stream	Bark, coal, oil 1.5-2.0% S	80
Caterpillar Tractor Company Mossville, IL (FMC Environmental Equipment)	10/75	4	4	140,000 total	Dual alkali (concentrated)	Coal 3.2% S	90
Nekoosa Papers, Inc. Ashdown, AR (Neptune Airpol, Inc.)	2/76	1	2	211,000 total	Caustic waste stream	Coal 1.0-1.5% S	90+
Rickenbacker Air National Guard Columbus, OH (Research Cottrell-Bahco)	3/76	7	1	55,000	Limestone or Lime	Coal 3.6% S	90
General Motors Corporation Pontiac, MI (GM Environmental)	4/76	2	2	107,300 total	Sodium hydroxide	Refuse, Coal 0.84% S	90
FMC Green River, WY (FMC Environmental Equipment)	5/76	2	2	446,000 total	Sodium carbonate	Coal 1.0% S	80
Texasgulf Chemicals Company Granger, WY (SWEMCO)	9/76	2	2	140,000 total	Waste soda ash	Coal 0.75% S	90
Alyeska Pipeline Service Company Valdez, AK (FMC Environmental Equipment)	6/77	3	1	50,000	Sodium hydroxide	Diesel oil 0.07% S	96+
Getty Oil Company Cat Canyon Field #8 Generator Santa Maria, CA (In-House Design)	6/77	1	1	5,000	Sodium hydroxide	Oil 4.0% S	94

(Continued)

* Based on EPA 600/7-79-067b

** For once through sodium systems, the makeup sodium alkali is specified (where known), i.e., sodium hydroxide, sodium carbonate, soda ash, etc.

DNR - Data not reported

TABLE A-1. UNITS OPERATING THROUGHOUT 1979 (Continued)

Company Name and Location (Vendor)	Start-Up Date	Number of Boilers	Number of FGD Units	Capacity (scfm)	Process Type**	Boiler Fuel	Design SO_2 Removal Efficiency, %
Minn-Dak Farmers Cooperative Wahpeton, ND (Koch Engineering)	6/77	2	2	164,000 total	Ammonia	Lignite 1.0% S	DNR
Caterpillar Tractor Company Morton, IL (Zurn Industries)	1/78	2	2	38,000 total	Dual alkali (dilute)	Coal 3.2% S	90
Kerr-McGee Chemical Corporation Argus Facility Trona, CA (Combustion Equipment Association)	4/78	1	1	245,000	Sodium carbonate	Coke, coal, oil 0.5-5.0% S	98
	6/78	1	1	245,000	Sodium carbonate	Coke, oil 0.5-5.0% S	98
Caterpillar Tractor Company East Peoria, IL (FMC Environmental Equipment)	4/78	4	4	210,000 total	Dual alkali	Coal 3.2% S	90
*Kernridge Oil Company McKittrick, CA (Heater Technology)	6/78	1	1	12,000	Sodium hydroxide	Oil 1.1% S	DNR
(Thermotics)	7/78	1	1	12,000	Sodium hydroxide	Oil 1.1% S	DNR
(C-E Natco)	1/79	1	1	12,000	Sodium hydroxide	Oil 1.1% S	DNR
*Chevron, USA, Inc. Bakerfield, CA (Koch Engineering)	7/78	18	3	248,000 total	Sodium carbonate	Oil 1.1% S	90
	7/79	12	2	146,000 total	Sodium carbonate	Oil 1.1% S	90
Pfizer, Inc. East St. Louis, IL (In-House Design)	9/78	3	1	100,000	Lime	Coal 3.5% S	95
Getty Oil Company Kern River Field Bakersfield, CA (In-House Design)	12/78	87	10	891,000 total	Soda ash	Oil 1.05% S	96

* Based on EPA 600/7-79-067b

** For once through sodium systems, the makeup sodium alkali is specified (where known), i.e., sodium hydroxide, sodium carbonate, soda ash, etc.

DNR - Data not reported

TABLE A-2. UNITS PLANNED, UNDER CONSTRUCTION OR STARTED UP IN 1979

Company Name and Location (Vendor)	Start-Up Date	Number of Boilers	Number of FGD Units	Process Type**	Boiler Fuel	Design SO_2 Removal Efficiency, %
Caterpillar Tractor Company Mapleton, IL (FMC Environmental Equipment)	3/79	3	3	Dual alkali (concentrated)	Coal 3.2% S	90
*Texaco, Incorporated San Ardo, CA (Ducon Co.)	3/79	9	3	Sodium carbonate	Oil 1.7% S	95
*Mobil Oil Company Buttonwillow, CA (Heater Technology)	4/79	7	7	Sodium carbonate	Oil 1.1% S	85
*Inland Container Corporation New Johnsonville, TN (Neptune Airpol, Inc.)	5/79	1	1	Ammonia	Wood and spent liquor <3.0% S	90
Sun Production Company Newhall, CA (C-E Natco)	9/79	1	1	Sodium hydroxide	Oil 1.2% S	85
	9/79	1	1	Sodium hydroxide	Oil 1.4% S	85
Strathmore Paper Company Woronoco, MA (Mikropul Corporation)	8/79	1	1	Sprayer dryer-Lime	Coal, oil 0.75-3.0% S	75
Mobil Oil Company McKittrick, CA (Heater Technology)	Delivered 8/79	DNR	20	Sodium hydroxide	DNR	DNR
Atlantic Richfield Ferndale, WA (FMC Environmental Equipment)	10/79	DNR	DNR	Sodium (once through)	DNR	DNR
Celanese Corporation Cumberland, MD (Rockwell-Wheelabrator Frye)	12/79	1	1	Spray dryer-Lime	Coal 3.2% S	85
Boise Southern DeRidder, LA (Neptune Airpol, Inc.)	12/79	2	2	Sodium hydroxide	Primary fuel: wood waste Secondary Fuels: natural gas and # 2 fuel oil	85% for #2 Fuel Oil
Getty Oil Company McKittrick, CA (In-House Design)	12/79	2	2	Sodium hydroxide	Oil 1.0-1.1% S	90-95

(Continued)

* Based on EPA-600/7-79-067b

** For once through sodium systems, the makeup sodium alkali is specified (where known), i.e., sodium hydroxide, sodium carbonate, soda ash, etc.

DNR - Data not reported

TABLE A-2. UNITS PLANNED, UNDER CONSTRUCTION OR STARTED UP IN 1979 (Continued)

Company Name and Location (Vendor)	Start-Up Date	Number of Boilers	Number of FGD Units	Process Type**	Boiler Fuel	Design SO_2 Removal Efficiency, %
Sante Fe Energy Taft, CA (Heater Technology)	12/79	8	1	Dual alkali	Oil ~1.1% S	96
	3/81	3	3	Sodium (once through)	Oil ~1.1% S	96
	7/81	1	1	Sodium (once through)	Oil ~1.1% S	96
*Carborundum Abrasives Buffalo, NY (Carborundum Environmental Systems, Ltd.)	0/80	2	1	Lime	Coal 2.2% S	95
Caterpillar Tractor Company Mapleton, IL (FMC Environmental Equipment)	1/80	2	2	Dual alkali (concentrated)	Coal 3.2% S	90
Union Oil Company McKittrick, Ca (Heater Technology)	1/80 3/80 6/80 7/80 11/80	1 2 2 2 1	8	Sodium hydroxide	Oil 0.7-1.2% S	95
Shell Oil Company Coalinga, CA (Ducon Company)	3/80 7/80 6/81	12	3	Sodium hydroxide	Oil 0.6% S	90
Chevron, USA, Inc. Maricopa, CA (Heater Technology)	Delivered 3/80	DNR	1	Sodium hydroxide	DNR	DNR
Mobil Oil Company Taft, CA (Heater Technology)	Delivered 7/80	DNR	2	Sodium hydroxide	DNR	DNR
Arco/Polymers Beaver Valley Plant, Monaca, PA (FMC Environmental Equipment)	8/80	3	3	Dual alkali	Coal 3.0% S	90
Union Oil Company McKittrick, CA (Anderson 2000)	8/80 7/81 10/81	1 2 1	4	Sodium hydroxide	Oil 0.7-1.2% S	95
Texaco, Incorporated Santa Maria, CA (Thermotics, Inc.)	8/80	1	1	Sodium hydroxide	Oil 3.5% S	98

(Continued)

* Based on EPA-600/7-79-067b

** For once through sodium systems, the makeup sodium alkali is specified (where known), i.e., sodium hydroxide, sodium carbonate, soda ash, etc.

DNR - Data not reported

TABLE A-2. UNITS PLANNED, UNDER CONSTRUCTION OR STARTED UP IN 1979 (Continued)

Company Name and Location (Vendor)	Start-Up Date	Number of Boilers	Number of FGD Units	Process Type**	Boiler Fuel	Design SO_2 Removal Efficiency, %
Mobil Oil Company Bakersfield, CA (Heater Technology)	Delivered 10/80	DNR	8	Sodium hydroxide	DNR	DNR
Union Oil Company McKittrick, CA (Koch Engineering)	11/80 7/81 0/82	1 1 2	4	Sodium hydroxide	Oil 0.7-1.2% S	95
Shell Oil Company Taft, CA (Neptune Airpol, Inc.)	12/80	3	1	Sodium hydroxide	Oil 1.5% S	95
Chevron, USA, Inc. Bakersfield, CA (Koch Engineering)	0/81	DNR	2	DNR	DNR	DNR
Grissom Air Force Base Bunker Hill, IN (Neptune Airpol, Inc.)	1/81	3	1	Dual alkali (concentrated)	Coal 3.0% S	DNR
Union Oil Company Guadalupe, CA (Heater Technology)	2/81	1	1	Sodium hydroxide	Oil 2.2% S	95
Shell Oil Company Bakersfield, Ca (Neptune Airpol, Inc.)	3/81	8	1	Sodium hydroxide	Oil 1.1% S	95
Cranston Print Works Fletcher, NC (W.W. Sly Manufacturing Co.)	5/81	1	1	Waste alkali	Coal 1.0-3.0% S	DNR
Grace Petroleum Corporation Pismo Beach, CA (Thermotics, Inc.)	5/81	4	4	Sodium hydroxide	Oil 1.18% S	98
Commonwealth of Pennsylvania Harrisburg, PA (Pittsburgh Environment and Energy Sytems)	6/81	1	1	Sulf-X (iron sulfide slurry)	Coal 1.82% S	90
St. Regis Paper Company Sartell, MN (Neptune Airpol, Inc.)	5/82	1	1	Lime/ Soda ash	Coal, bark, sludge 0.45% S	90
Tenneco Oil Green River, WY (Flakt, Inc.)	4/82	2	1	Soda ash	Coal 0.8% S	93

* Based on EPA 600/7-79-067b

** For once through sodium systems, the makeup sodium alkali is specified (where known), i.e., sodium hydroxide, sodium carbonate, soda ash, etc.

DNR - Data not reported

TABLE A-3. UNITS THAT TERMINATED OPERATION OR CHANGED STATUS IN 1979*

Company Name and Address	Vendor	Process Type	Status April 1979**	Status End of 1979	Comments
C.A.M Houston, TX	Never Selected	Never Selected	Planned	Cancelled	Decision was made to not build cogeneration facility.
Double Barrell Oil Company Bakersfield, CA	C-E Natco	Caustic	Operating	Shut down	Went out of business.
E. I. DuPont de Nemours & Company Athens, GA	Never Selected	Never Selected	Planned	Cancelled	Boiler fires low sulfur fuels or natural gas.
Northern Ohio Sugar Company Freemont, OH	Great Western Sugar Company	Water (alkali addition capability)	Operating	See Comments	Used for particulate removal only; boiler currently burning low sulfur coal.
Phillip Morris, Inc. Chesterfield, VA	Flakt, Inc.	Sodium carbonate	Under Construction	Cancelled	Boiler fires low sulfur fuels or natural gas.
Reichold Chemicals Pensacola, FL	Neptune Airpol	Sodium carbonate	Operating	Shut down	Part of plant that uses FGD system shut down.
Western Correctional Institute Pittsburgh, PA	Pittsburgh Environmental & Energy Systems	FeS; Sulf-X	Planned	Cancelled	Did not install FGD unit; decided to fire natural gas. Sulf-X system will be installed at a different site.

* Compared to the status reported in EPA-600/7-79-067b
**Reported in EPA-600/7-79-067b

APPENDIX B

PROCESS DESCRIPTIONS
AND
FLOW DIAGRAMS

APPENDIX B

Brief process descriptions and flow diagrams for the most prevalent types of FGD processes identified in this survey are presented below.

Sodium Scrubbing (once through)

Sodium scrubbing processes are capable of achieving high SO_2 removal efficiencies over a wide range of inlet SO_2 concentrations. However, these processes consume a premium chemical and produce an aqueous waste for disposal. A simplified process flow diagram is presented in Figure B-1.

Sodium scrubbing processes currently being used in industrial boiler FGD applications employ a wet scrubbing solution of sodium hydroxide (NaOH), sodium carbonate (Na_2CO_3) or an alkaline waste stream to absorb SO_2 from the flue gas. The operation of the scrubber is characterized by a low liquid-to-gas ratio and a sodium alkali sorbent which has a high reactivity relative to lime or limestone sorbents. Additionally, the scrubbing liquid is a solution rather than a slurry because of the high solubility of sodium salts. The SO_2 absorption reactions which take place in the scrubber are:

$$2\ NaOH + SO_2 \rightarrow Na_2SO_3 + H_2O$$

$$Na_2CO_3 + SO_2 \rightarrow Na_2SO_3 + CO_2$$

$$Na_2SO_3 + SO_2 + H_2O \rightarrow 2\ NaHSO_3$$

Simultaneously, some sodium sulfite reacts with the oxygen in the flue gas to produce sodium sulfate:

$$Na_2SO_3 + 1/2O_2 \rightarrow Na_2SO_4$$

The scrubber effluent, therefore, contains a mixture of sodium salts.

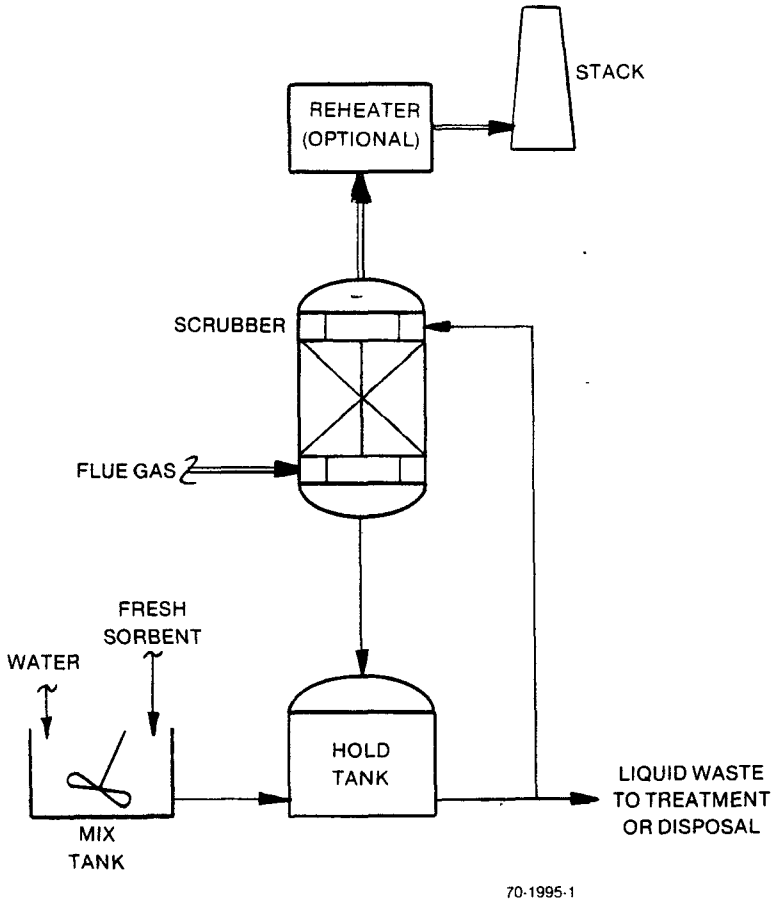

Figure B-1. Sodium scrubbing FGD system.

Chemical storage and handling equipment are auxiliaries associated with sodium scrubbing systems. Sodium carbonate reagent handling requirements include dry storage, usually in silos. A conveyor system is generally used to transport the reactant from the silo to a mixing tank, where the sodium alkali is dissolved to produce the scrubbing solution. The solution from the mix tank is pumped to a larger hold tank where it combines with the scrubber effluent. The majority of the hold tank liquor is recycled to the scrubber with a slipstream going to waste treatment and disposal. For small sodium hydroxide systems, especially in the California oil fields, sodium hydroxide solution is often trucked in and stored in tanks at the scrubbing site. Therefore, no solids handling equipment is required for these installations.

Dual Alkali Process

The dual alkali process, developed and utilized by industry in this country, uses a clear sodium alkali solution for SO_2 removal and produces a calcium sulfite and sulfate sludge for disposal. Although dual alkali processes produce a throwaway by-product, a regeneration step is employed to regenerate the active sodium alkali for SO_2 sorption. A simplified process flow diagram is presented in Figure B-2.

The process can be divided into three principal areas: absorption, regeneration, and solids separation. The principal chemical reactions for a sodium/lime dual alkali system are illustrated by the following equations:

Absorption

$$2\ NaOH + SO_2 \rightarrow Na_2SO_3 + H_2O$$
$$Na_2CO_3 + SO_2 \rightarrow Na_2SO_3 + CO_2$$
$$Na_2SO_3 + SO_2 + H_2O \rightarrow 2\ NaHSO_3$$
$$Na_2SO_3 + 1/2\ O_2 \rightarrow Na_2SO_4$$

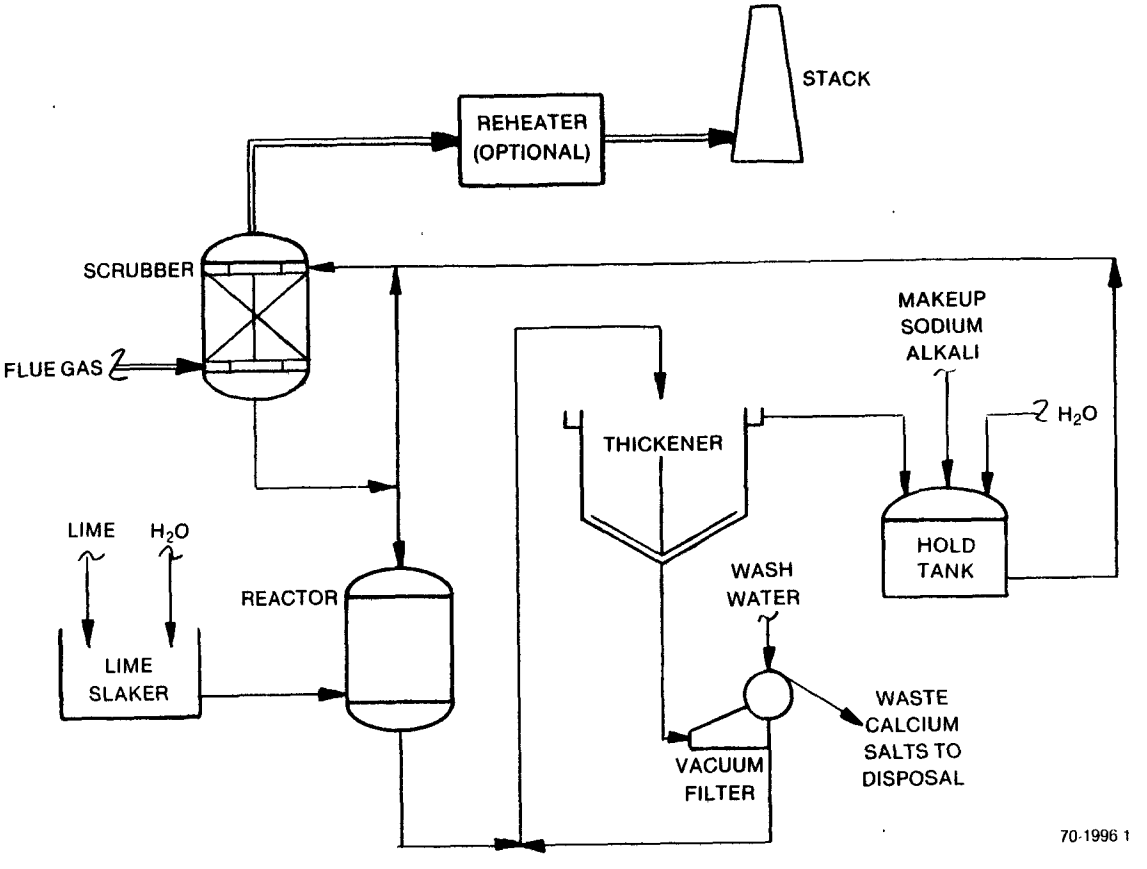

Figure B-2. Dual alkali FGD system.

Regeneration

$$Ca(OH)_2 + 2NaHSO_3 \rightarrow Na_2SO_3 + CaSO_3 \cdot 1/2H_2O + 3/2\ H_2O$$

$$Ca(OH)_2 + Na_2SO_3 + 1/2H_2O \rightarrow 2NaOH + CaSO_3 \cdot 1/2\ H_2O$$

$$Ca(OH)_2 + Na_2SO_4 + 2H_2O \rightarrow 2NaOH + CaSO_4 \cdot 2H_2O$$

In the scrubber, SO_2 is removed from the flue gas due to reaction with NaOH and Na_2CO_3. Because oxygen is present in the flue gas, sulfite oxidation also occurs. Most of the scrubber effluent is recycled back to the scrubber; however, a slipstream is withdrawn and reacted with slaked lime in the regeneration reactor. The presence of sulfate in the system is undesirable in that it converts active sodium to an inactive form, thus lowering SO_2 removal or increasing sodium consumption for a fixed SO_2 removal.

The regeneration reactor effluent, which contains calcium sulfite and sulfate is sent to a thickener where the solids are concentrated. The thickener overflow is returned to the system, and the underflow containing the calcium solids is further concentrated in a vacuum filter (or other device) to about 50 percent solids or more. The solids are washed, to reduce the soluble sodium salts in the adherent liquor prior to disposal, and the wash water is returned to the system.

Chemical storage and handling equipment are the principal auxiliaries associated with dual alkali systems. Receiving, storage, handling, and preparation facilities are required for both lime and the sodium alkali (either sodium hydroxide or sodium carbonate). The types of facilities needed for the sodium alkali are described in the once through sodium process description. Lime facilities include silos for dry storage and a slaker.

Lime and Limestone Processes

The lime and limestone FGD processes use a slurry of calcium oxide or calcium carbonate to absorb SO_2 in a wet scrubber. A by-product calcium sulfite/sulfate sludge is produced for disposal. A simplified process flow diagram is presented in Figure B-3.

The absorption of SO_2 from flue gases by a lime or limestone slurry involves both gas-liquid, and liquid-solid mass transfer. The chemistry is complex, involving many side reactions. The overall reactions are those of SO_2 with lime (CaO) or limestone ($CaCO_3$) to form calcium sulfite ($CaSO_3 \cdot 1/2\ H_2O$) with some oxidation of the sulfite to form calcium sulfate ($CaSO_4 \cdot 2H_2O$). These reactions can be represented as follows:

Lime

$$SO_2 + CaO + 1/2\ H_2O \longrightarrow CaSO_3 \cdot 1/2\ H_2O$$

$$SO_2 + 1/2\ O_2 + CaO + 2H_2O \longrightarrow CaSO_4 \cdot 2H_2O$$

Limestone

$$SO_2 + CaCO_3 + 1/2\ H_2O \longrightarrow CaSO_3 \cdot 1/2\ H_2O + CO_2$$

$$SO_2 + 1/2\ O_2 + CaCO_3 + 2\ H_2O \longrightarrow CaSO_4 \cdot 2H_2O + CO_2$$

The calcium sulfite and sulfate crystals precipitate in a reaction vessel or hold tank which is designed to provide adequate residence time for solids precipitation as well as for dissolution of the alkaline additive. The hold tank effluent is recycled to the scrubber to absorb additional SO_2. A slipstream from the hold tank is sent to a solid-liquid separator to remove the precipitated solids from the system. The waste solids, which may vary from 35-60 weight percent solids, are generally disposed of by ponding or landfill.

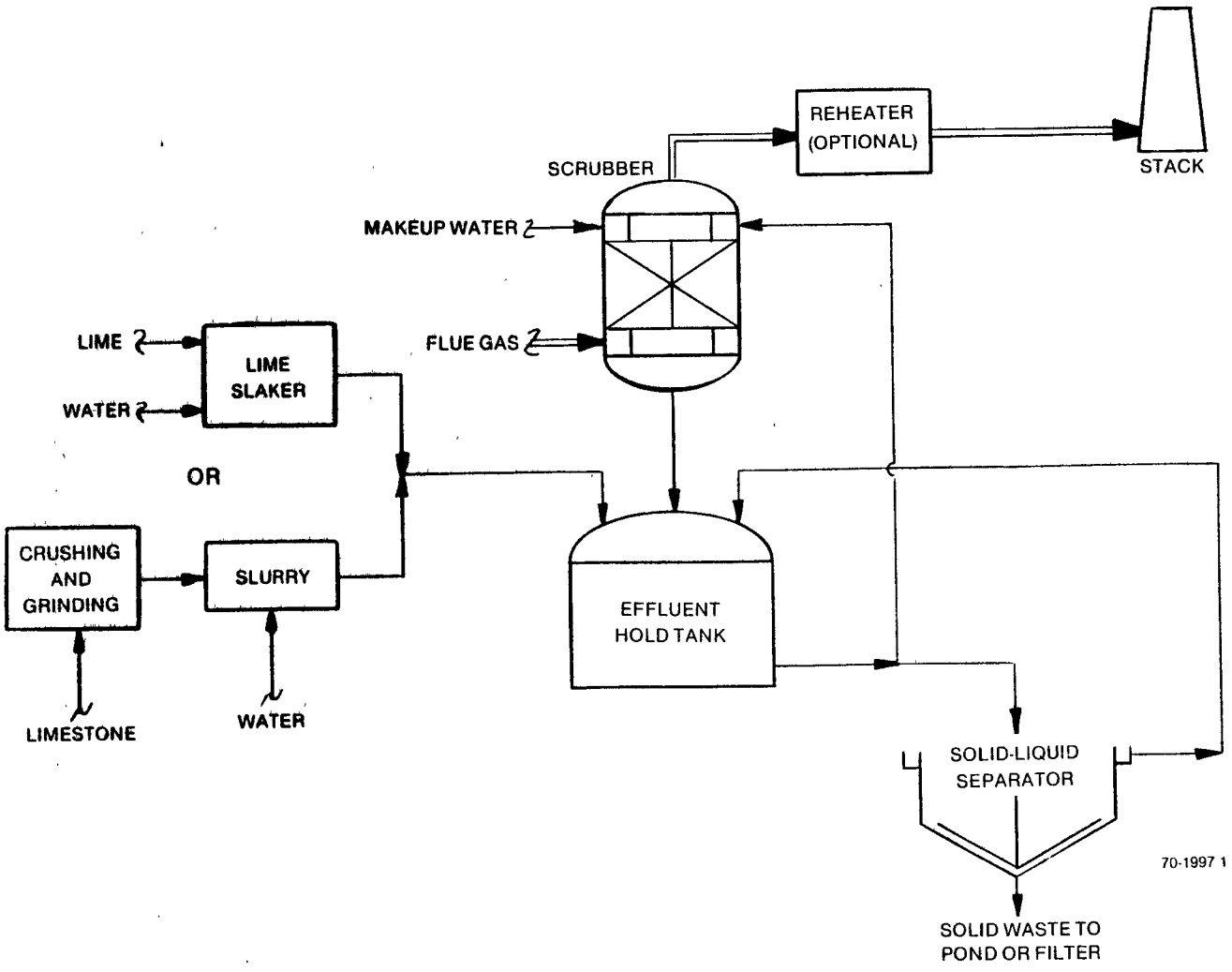

Figure B-3. Lime or limestone FGD system.

Auxiliary equipment associated with this process includes a reagent preparation system. Reagent preparation may consist of limestone grinding and slurrying or lime slaking. However, for most industrial boilers, due to their small size, preground lime and limestone may be purchased. Therefore, the feed preparation system will generally consist of storage silos and either lime slaking or limestone slurrying equipment.

Spray Drying Process

In a spray drying process, flue gas is contacted with a solution or slurry of alkaline material in a vessel (spray dryer) of relatively long residence time (5 to 10 seconds). The flue gas SO_2 reacts with the alkali solution or slurry to form liquid phase salts which are dried in the spray dryer to about one percent free moisture. The alkali is typically lime or sodium carbonate. The spent solids therefore contain either very soluble sodium compounds or relatively insoluble calcium compounds.

Generally, the particulate matter is not removed upstream of the spray dryer. Therefore, the particulate collection device (ESP or baghouse) downstream of the dryer will remove both fly ash and the dry sodium or calcium compounds (unreacted sorbent plus sulfite/sulfate compounds) formed in the dryer. For large capacity units and/or units treating flue gas with high SO_2 concentrations, recycle of the collected solids may be economically feasible to increase sorbent utilization. A generalized flow diagram for a typical spray drying process is shown in Figure B-4.

Reaction between the alkaline material and flue gas SO_2 proceeds both during and following the drying process. The mechanisms of the SO_2 removal reactions are not well understood. It has not been determined whether SO_2 removal occurs predominantly in the liquid phase, by absorption into the finely atomized droplets being dried, or by reaction between gas

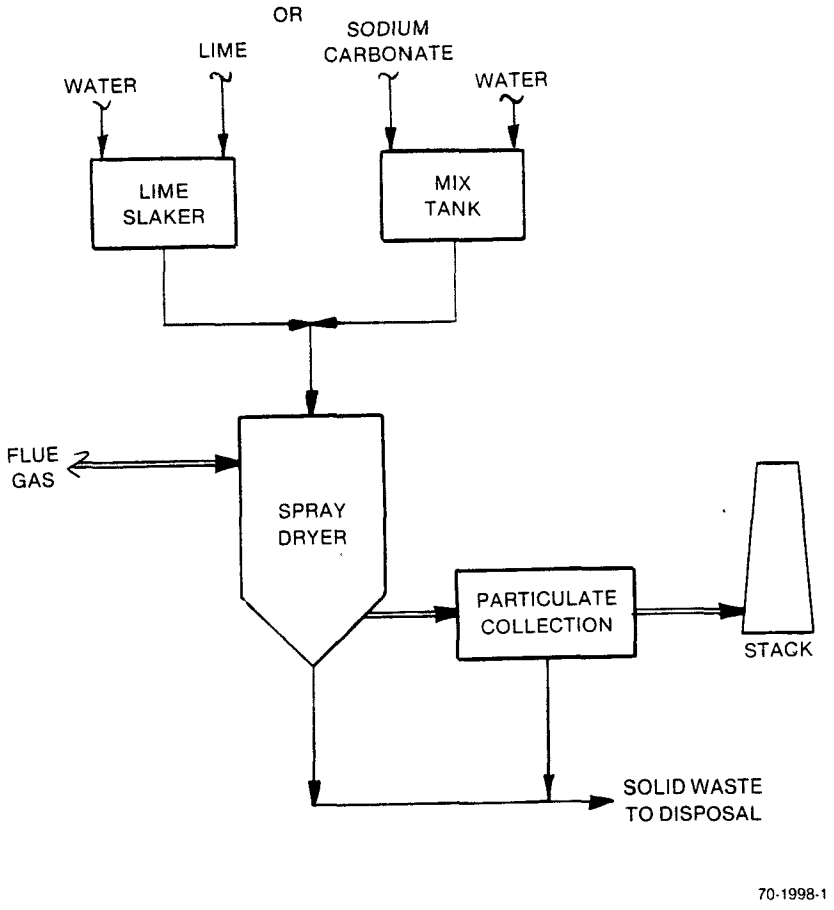

Figure B-4. Spray drying FGD system.

phase SO_2 and the slightly moist spray-dried solids. The overall chemical reactions for this process are shown below.

$$SO_2 + Na_2CO_3 \rightarrow Na_2SO_3 + CO_2$$

or

$$SO_2 + CaO + 1/2\ H_2O \rightarrow CaSO_3 \cdot 1/2\ H_2O$$

In addition to these primary reactions, sulfate salts will be produced by the following reactions:

$$Na_2SO_3 + 1/2\ O_2 \rightarrow Na_2SO_4$$

and

$$SO_3 + Na_2CO_3 \rightarrow Na_2SO_4 + CO_2$$

or

$$SO_2 + CaO + 1/2\ O_2 + 2H_2O \rightarrow CaSO_4 \cdot 2H_2O$$

The combined particulate matter and sulfite/sulfate salts from the particulate collection device are typically disposed of in a landfill. Highly-soluble sodium salts will, of course, require more sophisticated disposal techniques than calcium salts.

Chemical receiving, storage, handling, and preparation equipment are the principal auxiliaries associated with spray dryer systems. These include facilities for dry chemical storage (silos) and sorbent preparation (slakers for lime and mix tanks for sodium carbonate).

TECHNICAL REPORT DATA
(Please read Instructions on the reverse before completing)

1. REPORT NO. EPA-600/7-81-083	2.	3. RECIPIENT'S ACCESSION NO.
4. TITLE AND SUBTITLE EPA Industrial Boiler FGD Survey--1979		5. REPORT DATE April 1981
		6. PERFORMING ORGANIZATION CODE
7. AUTHOR(S) Jay R. Hoover		8. PERFORMING ORGANIZATION REPORT NO.
9. PERFORMING ORGANIZATION NAME AND ADDRESS Radian Corporation, 8501 Mo-Pac Boulevard, Austin, Texas 78759		10. PROGRAM ELEMENT NO. C9BN1B
		11. CONTRACT/GRANT NO. 68-02-3171, Task 13
12. SPONSORING AGENCY NAME AND ADDRESS EPA, Office of Research and Development, Industrial Environmental Research Laboratory, Research Triangle Park, NC 27711		13. TYPE OF REPORT AND PERIOD COVERED Annual; 3/80-3/81
		14. SPONSORING AGENCY CODE EPA/600/13

15. SUPPLEMENTARY NOTES IERL-RTP project officer is J. David Mobley, Mail Drop 61, 919/541-2915. EPA-600/7-78-052a, -b, and -c, and EPA-600/7-79-067a and -b are related reports.

16. ABSTRACT The report gives results of a survey of vendors and operators of flue gas desulfurization (FGD) systems applied to industrial boilers for the 1979 calendar year. A total of 123 FGD units were operated throughout 1979. Once-through sodium systems accounted for 102 of these units, of which 74 were applied to small oil-fired steam generators in the California oil fields. The second most prevalent FGD process was the dual alkali system typically used on large coal-fired boilers, primarily in Illinois and Ohio. In addition, there were 98 planned industrial boiler FGD units, most of which are once-through sodium systems applied to oil-field steam generators. The performance data (SO2 removal) for once-through sodium units is high, with all reporting systems achieving greater than 95% removal. The lime/limestone units achieved 85 to 92% SO2 removal. The dual alkali units averaged greater than 90% SO2 removal. Reported reliability for FGD units at seven sites averaged about 95% with sodium systems generally achieving greater than and lime/limestone systems less than 95%.

17. KEY WORDS AND DOCUMENT ANALYSIS

a. DESCRIPTORS	b. IDENTIFIERS/OPEN ENDED TERMS	c. COSATI Field/Group
Pollution	Pollution Control	13B
Boilers	Stationary Sources	13A
Flue Gases	Industrial Boilers	21B
Desulfurization		07A,07D

18. DISTRIBUTION STATEMENT Release to Public	19. SECURITY CLASS (This Report) Unclassified	21. NO. OF PAGES 39
	20. SECURITY CLASS (This page) Unclassified	22. PRICE

EPA Form 2220-1 (9-73)

U.S. ENVIRONMENTAL PROTECTION AGENCY
Office of Research and Development
Center for Environmental Research Information
Cincinnati, Ohio 45268

OFFICIAL BUSINESS
PENALTY FOR PRIVATE USE, $300
AN EQUAL OPPORTUNITY EMPLOYER

POSTAGE AND FEES PAID
U S ENVIRONMENTAL PROTECTION AGENCY
EPA-335

U.S. MAIL

4TH CLASS
SPECIAL BOOK RATE

1ER0041003JC 000045126001 001
USEPA REG V ENV ENG
EDITHA M ARDIENTE
230 S DEARBORN ST
CHICAGO IL 60604

If your address is incorrect, please change on the above label tear off; and return to the above address.
If you do not desire to continue receiving these technical reports, CHECK HERE ☐, tear off label, and return it to the above address.

Publication No. EPA-600/7-81-083