600284152

FIELD MANUAL

PERFORMANCE EVALUATION AND TROUBLESHOOTING AT METAL-FINISHING WASTEWATER TREATMENT FACILITIES

by

T. N. Sargent, P.E.
G. C. Patrick, P.E.
E. H. Snider, Ph.D., P.E.
Engineering-Science, Inc.
Atlanta, Georgia 30329

EPA Contract No. 68-03-3040

Project Officer

Thomas J. Powers
Industrial Pollution Control Division
Industrial Environmental Research Laboratory
Cincinnati, Ohio 45268

Industrial Environmental Research Laboratory
Office of Research and Development
U.S. Environmental Protection Agency
Cincinnati, Ohio 45268

FIELD MANUAL

PERFORMANCE EVALUATION AND TROUBLESHOOTING AT METAL-FINISHING WASTEWATER TREATMENT FACILITIES

by

T. N. Sargent, P.E.
G. C. Patrick, P.E.
E. H. Snider, Ph.D., P.E.
Engineering-Science, Inc.
Atlanta, Georgia 30329

EPA Contract No. 68-03-3040

Project Officer

Thomas J. Powers
Industrial Pollution Control Division
Industrial Environmental Research Laboratory
Cincinnati, Ohio 45268

Industrial Environmental Research Laboratory
Office of Research and Development
U.S. Environmental Protection Agency
Cincinnati, Ohio 45268

PREFACE

For the first time, an operating and troubleshooting manual has been put together to assist plant operators and managers of wastewater treatment plants for the metal finishing industry. This performance evaluation and troubleshooting guide has been reviewed by true experts of plating wastewater treatment - the plant operators. Without their day to day insight into operational and maintenance problems, the initial field manual effort would not have been possible.

A more detailed development of this guide is destined for the future. Only by widespread use and evaluation can this manual be revised and upgraded to reflect the current and future trends of complex treatment and control technology systems required for the metal finishing industry. It is hoped that this field manual will guide plant operators in achieving consistently higher performance levels.

CONTENTS

Abstract	iv
Figures	v
Tables	vi
Abbreviations and Symbols	vii
1. Introduction	1
Purpose and Scope of Manual	1
Manual Format	1
2. Literature Review	3
Analysis of Permit Violations	3
Operation and Maintenance Specifics	4
3. Problem Assessment and Recommendations for Improving Permit Compliance	8
Conventional Wastewater Treatment	8
Problem Assessment	10
Recommendations for Improving Permit Compliance	14
Resource Recovery	16
4. Equalization	19
Introduction	19
Theory of Operation	19
Description of Equipment	21
Operational Procedures	25
Typical Performance Values	29
Troubleshooting Guide	29
5. Oil Removal	29
Introduction	32
Theory of Operation	33
Description of Equipment	35
Operational Procedures	42
Typical Performance Values	51
Troubleshooting Guide	52
6. Cyanide Oxidation	57
Introduction	57
Theory of Operation	57
Description of Equipment	62
Operational Procedures	64
Typical Performance Values	70
Troubleshooting Guide	70
7. Chromium Reduction	74
Introduction	74
Theory of Operation	74
Description of Equipment	75
Operational Procedure	77
Typical Performance Values	85
Troubleshooting Guide	85

Contents (cont.)

8. pH Control 88
Introduction 88
Theory of Operation 88
Description of Equipment 91
Operational Procedures 98
Typical Performance Values 109
Troubleshooting Guide 109
9. Metal Precipitation 113
Introduction 113
Theory of Operation 113
Description of Equipment 115
Operational Procedures 118
Typical Performance Values 128
Troubleshooting Guide 132
10. Flocculation 135
Introduction 135
Theory of Operation 135
Description of Equipment 136
Operational Procedures 137
Typical Performance Values 144
Troubleshooting Guide 144
11. Sedimentation 147
Introduction 147
Theory of Operation 147
Description of Equipment 148
Operational Procedures 149
Typical Performance Values 159
Troubleshooting Guide 159
12. Filtration 163
Introduction 163
Theory of Operation 163
Description of Equipment 164
Operational Procedures 167
Typical Performance Values 171
Troubleshooting Guide 171
13. Gravity Thickening 179
Introduction 179
Theory of Operation 179
Description of Equipment 183
Operational Procedures 185
Typical Performance Values 191
Troubleshooting Guide 191
14. Belt Filter Presses 196
Introduction 196
Theory of Operation 196
Description of Equipment 197
Operational Procedures 197
Typical Performance Values 204
Troubleshooting Guide 204

Contents (cont.)

15. Vacuum Filtration 207
Introduction 207
Theory of Operation 207
Description of Equipment 208
Operational Procedures 214
Typical Performance Values 221
Troubleshooting Guide 222
16. Pressure Filtration for Dewatering 229
Introduction 229
Theory of Operation 229
Description of Equipment 231
Operational Procedures 235
Typical Performance Values 241
Troubleshooting Guide 241
17. Centrifugation 245
Introduction 245
Theory of Operation 245
Description of Equipment 246
Operational Procedures 252
Typical Performance Values 262
Troubleshooting Guide 263

References 271
Appendix A - Computer Literature Search 273
Appendix B - Regulations Affecting the Metal Finishing Industry 381
Appendix C - Metric-English Units Conversion 410

ABSTRACT

This manual provides a technical field guide or reference document for use in improving the performance of facilities for the treatment of metal finishing wastes. The main purpose of the manual is to provide a troubleshooting guide for identifying problems, analyzing problems, and solving problems.

The manual describes general procedures for evaluating the performance of treatment processes and equipment commonly used in metal finishing waste treatment. The procedures also cover other items related to the effective operation of treatment facilities.

The methodology used to evaluate compliance problems and develop Operation and Maintenance (O&M) specifics are described in a review of the literature, followed by an assessment of the causes of permit violations and the recommended measures for improving compliance.

The unit processes described in this manual are those commonly used in the treatment of metal finishing wastes. They are the following: equalization, oil removal, cyanide oxidation, chromium reduction, pH control, metal precipitation, flocculation, sedimentation, filtration, gravity thickening, belt filter presses, vacuum filtration, pressure filtration for dewatering, and centrifugation. For each of these unit processes, the manual contains information on theory of operation, description of equipment, operational procedures, typical performance values, and a troubleshooting guide.

FIGURES

Number		Page
1	Electroplating Industry Conventional Wastewater Treatment	9
2	Methods of Equalization	22
3	API Separator	37
4	Line Diagrams of Principal DAF Process Variations	39
5	Destruction Time Required for Cyanate Vs pH	59
6	Distribution of HOCL and OCL	61
7	Two-Stage Cyanide Destruction	63
8	Hexavalent Chromium Reduction with Sulfur Dioxide	76
9	Relationship Between Hexavalent Chromium, pH, and Retention Time for Sulfur Dioxide	81
10	Relationship Between ORP, Sodium Bisulfite Required, and pH	83
11	A Sample Titration Curve	90
12	Feedback Mode of pH Control	93
13	Feedforward Mode of pH Control	94
14	Feedback-Feedforward Mode of pH Control	96
15	Lead Solubility for a Typical Wastewater	114
16	Lead Solubility as a Function of Carbonate Concentration	116
17	Metal Concentration Versus Treatment Process	117
18	Metal Concentration After Treatment Process	119
19	Metal Concentration Versus Treatment Process	122
20	Solubility of Selected Heavy Metal Hydroxides	124
21	Theoretical Solubilities of Metal Hydroxides and Sulfides as a Function of pH	126
22	Wastewater Treatment Processes for Removing Heavy Metals	127
23	Effect of Gravity Thickening upon Solids Concentration	180
24	Effect of Time on Sludge Compaction	182
25	Liquid Zones in a Continuously Operated Thickener	184
26	A Simple Belt Filter Press	198
27	Operating Zones of a Vacuum Filter	210
28	Typical Equipment Layout of Rotary Vacuum Filter System	213
29	Cutaway View of a Filter Press	232
30	Side View of a Filter Press	233
31	Cross Section of Concurrent Flow Solid-Bowl Centrifuge	247
32	Schematic Diagram of a Basket Centrifuge	249
33	Disc Type Centrifuge	251

TABLES

Number		Page
1	Equalization Troubleshooting Guide	30
2	Oil Removal Process Monitoring Requirements	43
3	Oil Removal Troubleshooting Guide	53
4	Cyanide Oxidation Process Monitoring Requirements	65
5	Horsepower Requirements for Medium Agitation	69
6	Cyanide Oxidation Troubleshooting Guide	71
7	Chromium Reduction Process Monitoring Requirements	78
8	Chromium Reduction Troubleshooting Guide	86
9	pH Adjustment Troubleshooting Guide	110
10	Metal Precipitation Process Monitoring Requirements	121
11	Metal Precipitation Troubleshooting Guide	133
12	Flocculation Process Monitoring Requirements	138
13	Flocculation Troubleshooting Guide	145
14	Sedimentation Process Monitoring Requirements	151
15	Sedimentation Troubleshooting Guide	160
16	Filtration Process Monitoring Requirements	169
17	Filtration Troubleshooting Guide	172
18	Gravity Thickening Process Monitoring Requirements	187
19	Gravity Thickening Troubleshooting Guide	192
20	Belt Filter Presses Process Monitoring Requirements	200
21	Belt Filter Press Troubleshooting Guide	205
22	Vacuum Filtration Process Monitoring Requirements	216
23	Typical Performance Values for Vacuum Filtration Dewatering	223
24	Vacuum Filtration Troubleshooting Guide	224
25	Pressure Filtration for Dewatering Process Monitoring Requirements	238
26	Pressure Filtration for Dewatering Troubleshooting Guide	242
27	Centrifugation Process Monitoring Requirements	254
28	Summary of Operational Variables Affecting Centrifuge Performance	257
29	Typical Performance Values for Centrifugal Thickening and Dewatering	264
30	Centrifugation Troubleshooting Guide	265

LIST OF ABBREVIATIONS AND SYMBOLS

Abbreviations

A:S	-	Air to Solids Ratio
API	-	American Petroleum Institute
DAF	-	Dissolved Air Flotation
HRT	-	Hydraulic Retention Time
IAF	-	Induced Air Flotation
ORP	-	Oxidation-Reduction Potential
PI	-	Proportional Plus Integral
PID	-	Proportional-Integral-Derivative
SOR	-	Surface Overflow Rate
SS	-	Suspended Solids Concentration
SVR	-	Sludge Volume Ratio
TSS	-	Total Suspended Solids Concentration

Symbols

C	-	Concentration
C_e	-	Effluent TSS Concentration
C	-	Influent TSS Concentration
C_i	-	Influent TSS Concentration to Clarifier
C_R	-	Sludge TSS Concentration
MVG	-	Mean Velocity Gradient for Flocculation
M	-	Dynamic Viscosity
P	-	Power Input for Flocculation
PD	-	Polymer Dosage
q	-	Polymer Flowrate
Q	-	Flowrate of Wastewater
Q_e	-	Effluent Flowrate
Q	-	Influent Flowrate
Q_i	-	Influent Flowrate to Clarifier
Q_R	-	Sludge Removal Flowrate
SL	-	Solids Loading
V	-	Volume

SECTION 1

INTRODUCTION

PURPOSE AND SCOPE OF MANUAL

The purpose of this manual is to provide a technical field guide or reference document for use in improving the performance of facilities for the treatment of metal finishing wastes. The main purpose of the manual is to provide a troubleshooting guide for the following: 1) identifying problems, 2) analyzing problems, and 3) solving problems.

Plant personnel responsible for waste treatment processes and achieving permit compliance must be knowledgeable about not only the problem areas, but also with electroplating and related metal finishing concepts and in-plant process modifications and changes as they relate to the waste treatment processes. This manual describes general procedures for evaluating the performance of treatment processes and equipment commonly used in metal finishing waste treatment. The procedures also cover other items related to the effective operation of treatment facilities. Troubleshooting guides, operating strategies, and process monitoring material are discussed in detail for each unit process commonly used in metal finishing waste treatment.

MANUAL FORMAT

It is assumed that the manual user has a general understanding of treatment facilities and their operation. The style, language, and format of the manual are directed to the level and technical knowledge of a technician with some experience with in-plant operation, design, inspection, or performance evaluation.

The manual is organized into the following major sections:

Section 1 INTRODUCTION. The purpose, scope, and format of the manual are described in this section.

Section 2 LITERATURE REVIEW. The methodology used to evaluate compliance problems and develop O&M specifics are described in this section.

Section 3 PROBLEM ASSESSMENT AND RECOMMENDATIONS FOR IMPROVING PERMIT COMPLIANCE. The causes of permit violations and the recommended measures for improving compliance are described in this section.

Sections 4 through 17. UNIT PROCESS EVALUATION AND TROUBLESHOOTING INFORMATION. For each unit process commonly used in the treatment of metal finishing wastes, this section contains the following information:

- Introduction
- Theory of Operation
- Description of Equipment
- Operational Procedures
- Typical Performance Values
- Troubleshooting Guide

SECTION 2

LITERATURE REVIEW

A literature review was conducted utilizing technical publications, government reports and documents, and a computerized literature search (see Appendix A). The literature search also included equipment manufacturers' information, data provided by professional organizations, and communications with personnel who were familiar with the treatment and disposal of metal finishing wastes. The objectives of the literature review were to collect data which would aid in identifying the major causes of permit violation, and to collect information which could be used to develop O&M specifics on the treatment and disposal of metal finishing wastes. Furthermore, by qualifying this data and information, methods and techniques for improving compliance of facilities could be developed.

ANALYSIS OF PERMIT VIOLATIONS

An analysis of permit violations was conducted to understand the problems associated with treatment of metal finishing wastes. The troubleshooting manual was then prepared to address the problems. An analysis of permit violations was performed utilizing the Quarterly Noncompliance Report published by the Office of Water of the United States Environmental Protection Agency. The report listed the major industries that were out of compliance and the parameters that were out of compliance. The violations in the Noncompliance Report were listed by SIC code. The SIC numbers used for identifying industries with metal wastes were 3471 (electroplating), 3631, 3632, 3633, 3639, 3714, 3721, and 3731.

The report cited thirty-four industries that were out of compliance from the third quarter of 1979 to the second quarter 1982. The ten parameters which were most frequently out of compliance between 1979 and 1982 for metal waste treatment are listed below:

Parameter	Number of Permit Violation Occurrences
Nickel	17
Cyanide	16
Chromium	15
pH	12
Copper	11
Phenol	8
TSS	7
Cadmium	6
Zinc	6
Lead	4

This field manual addresses all the parameters listed above except phenol. Treatment for removal of phenol was not included in this manual because it is not specifically regulated in the effluent guidelines for the electroplating industry. Treatment practices for control of the other nine parameters as well as oil and grease are included in the manual.

OPERATION AND MAINTENANCE SPECIFICS

Operation and Maintenance (O&M) specifics for the treatment of metal finishing wastes were obtained from a search of technical publications, a computerized literature search, and contacts with equipment manufacturers and operators. The information collected from these sources was then interpreted and compiled. This field manual was developed from information obtained from these sources.

Computerized Literature Search

A computerized literature search was performed using DIALOG™ Information Service of Lockheed Corporation. The computerized literature review was conducted in three steps. The first step was to locate the abstracts from the various data base files. The second step was to search the abstracts for the appropriate publications and documents. The final step was to review the publications.

The first step was initiated by selecting the keywords or series of keywords used to describe O&M specifics for metal finishing waste treatment. A series of keywords coupled by the words "and" or "or" is often used to select the desired abstract. A question mark in a keyword indicates that the identity of a letter is unknown and the computer is to identify all references including the letters which precede the question mark. For example, the keyword "chrom?" will cause the computer to search records labeled chrome, chromium, chromate, etc. The series of keywords selected are listed below:

1. NPDES or Permit and (Violation or Exceed) and Metal
2. Wastewater and Operation? and Maintenance
3. Operation and Maintenance and Metal?
4. Metal? and Precipitate? and Wastewater?
5. Cyanide? and (Oxidation or Removal or Treatment) and Wastewater
6. Chrom? and (Reduction or Removal or Treatment) and Wastewater

The keywords were then used to search the thirty-seven data files in Lockheed's DIALINDEX™. The search of the data files revealed the number of abstracts which contained the keywords. The information was used to ensure that the keyword series was restrictive enough without being overly restrictive. The two files which contained the most abstracts applicable to this project were the Metals Index (File 32) and the Pollution Abstracts Index (File 41). The Metals Index contained 99 abstracts which could be identified by the six series of keywords described above. The Pollution Abstracts contained 445 abstracts.

The second step in the computerized literature search was to review the abstracts identified by the keywords. The abstracts reviewed for both the metals data file and the pollution data file are presented in Appendix A. These abstracts were reviewed to see which publications were most applicable to the project.

The final step in the literature search was to review and evaluate the articles chosen from the abstract search and to incorporate this information into the O&M manual. Much of the information was used to review current treatment practices and to develop O&M specifics for the troubleshooting manual. These articles were only referenced when they contained specific information such as surface loading rates or mixing horsepower.

Technical Publications

The review of literature included technical publications which were not included in the computerized data base or those publications which were more easily obtained by a manual literature search. The former category contained articles that were published generally before 1970 and many reference books. The search of articles before 1970 was performed by reviewing annual indexes from publications such as Proceedings of the Purdue University Industrial Waste Conference, Journal Water Pollution Control Federation, and Water and Waste Engineering.

Sources from which information and data on metal finishing waste treatment could be easily obtained were the U.S. Environmental Protection Agency (EPA), the Water Pollution Control Federation (WPCF), the American Electroplating Society (AES), and reference books. More than 40 EPA publications relating to metal finishing wastes were reviewed. A series of seven EPA Technology Transfer documents provided much general information about metal-finishing waste treatment.[1,2,3,4,5,6,7] Twelve AES project reports were also reviewed. Numerous reference books on treatment of metal wastes were also identified and reviewed. This

review not only included books written for treatment of metal finishing wastes but also materials which described pH control, sedimentation, and sludge dewatering.

Equipment Manufacturers

Several manufacturers of equipment for metal finishing wastes were contacted. Information obtained from manufacturers' representatives was used to characterize and describe the different types of equipment, to develop O&M specifics, and to determine performance data. This information on field operations and maintenance was referenced when used.

SECTION 3

PROBLEM ASSESSMENT AND RECOMMENDATIONS FOR IMPROVING PERMIT COMPLIANCE

CONVENTIONAL WASTEWATER TREATMENT

Conventional wastewater treatment in the electroplating industry consists of the following unit processes (see Figure 1):

- Chromium reduction (if needed) of segregated chromium waste streams to reduce the chromium from its hexavalent form to the trivalent state, which then can be precipitated as chromium hydroxide by alkali neutralization,
- Cyanide oxidation (if needed) of segregated cyanide-bearing waste streams to oxidize the toxic cyanides to harmless carbon and nitrogen compounds,
- Neutralization of the combined metal-bearing wastewaters, acid/alkali wastewaters, strong chemical dumps, and the effluent from the cyanide and chromium treatment systems to adjust the pH within acceptable discharge limits and to precipitate the dissolved heavy metals as metal hydroxides,
- Clarification, in which flocculating/coagulating chemicals are added to promote the initial settling of the precipitated metal hydroxides,
- Gravity thickening over extended time to increase solids content of sludge before disposal.

These unit processes provide effective, reliable treatment for many electroplating waste streams. That is not to say, however, that such treatment is suitable for all applications or that the "normal" design

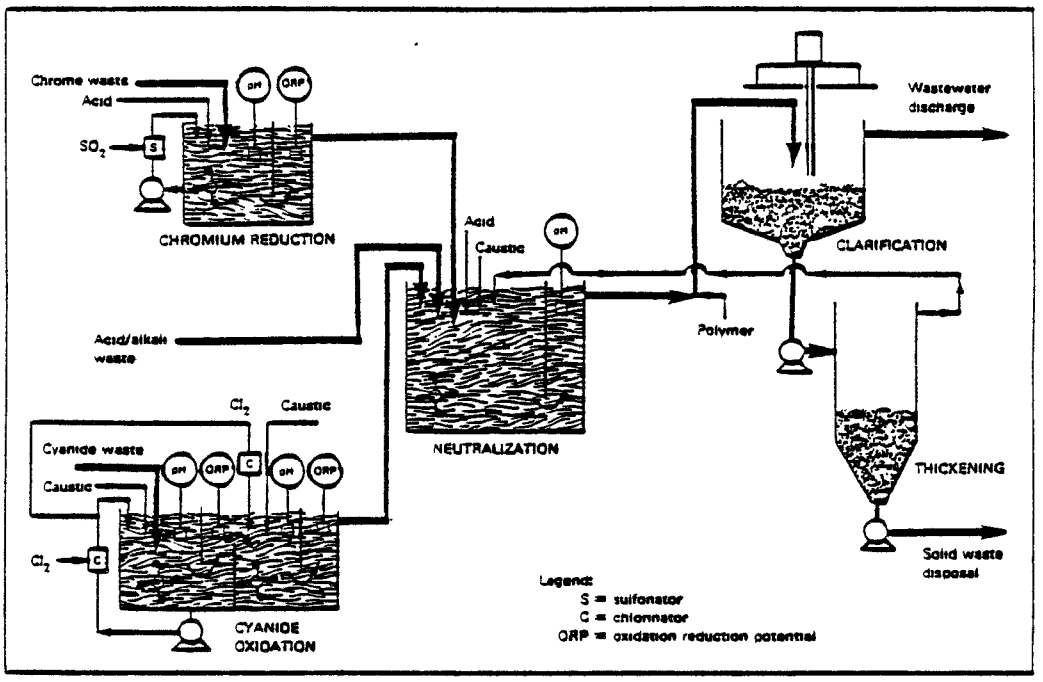

Figure 1. Electroplating industry conventional wastewater treatment.

SOURCE: USEPA ENVIRONMENTAL REGULATIONS AND TECHNOLOGY; THE ELECTROPLATING INDUSTRY, EPA 625/10-80-001, AUGUST 1980, P. 13.

parameters (retention time, reagent dosage, and so forth) will provide effective pollutant removal from every individual plater's wastewater discharge.

Many of the items covered in this manual have their basis in a conventional wastewater treatment system such as the one described in the preceding.

PROBLEM ASSESSMENT

A plant assessment is the initial step in a pollution control program. A plant assessment involves a thorough analysis of the operations of a metal finishing plant that relate to pollutant sources and water use. The information generated during a plant assessment is used in evaluating the application of in-plant changes for reducing chemical loss and water use.

A plant assessment includes the following steps: 1) inspection of the plating room layout, 2) review of plant operating practices, 3) examination of process water use, 4) performance of sampling and laboratory analysis to characterize waste streams and to determine dragout rates, and 5) identification of the frequency, volume, and characteristics of batch dumps.

Laboratory analyses of wastewater samples are performed using standard EPA-approved techniques. Throughout this manual, various analytical parameters and their concentrations are discussed. For all tests the analytical methodology presented in the EPA document "Methods for Chemical Analysis of Water and Wastes"[8] or "Standard Methods for the Examination of Water and Wastewater"[9] should be followed.

The successful operation and maintenance (O&M) of a waste treatment plant requires consistent performance that exceeds regulatory compliance levels. Failure to meet these compliance levels can result in costly disposal alternatives, fines, damage to the environment, and adverse

public reaction. If a treatment facility fails to meet compliance standards, the problem usually falls under one of the following causes:

1) Shock loadings (hydraulic or contaminants) to the waste treatment plant,
2) Poor understanding of O&M procedures,
3) Poor process control,
4) Equipment failure, and
5) Treatment plant design inadequacies.

The potential effect of good O&M on each of the five categories of non-compliance reasons is discussed below. If a plant finds itself in non-compliance it should determine which categories of causes are applicable and take appropriate action to see if improved O&M could be effective in improving its performance.

Shock Loadings

Shock loadings of flow or contaminants frequently cause treatment process upsets which can result in non-compliance. Sources of these shock loadings can be either spills or releases from production batch operations or cleaning operations. Their impact on the treatment process can be mitigated by installing sufficient equalization. Their impact can also often be controlled by changes in operating procedures in the production facility or in the treatment plant. Of foremost importance is communication between production and waste-treatment personnel. If waste-treatment personnel are notified of potential shock loads in sufficient time, mitigating action often can be taken, such as diverting the shock load to sidestream equalization to temporarily bypass sensitive processes, or manually modifying process operating parameters to adjust for the shock loading.

Modification of production procedures with respect to spill control and operating procedures for batch processes and cleaning operations can reduce the magnitude of shock loadings in several ways. Wastes from batch or cleaning operations can be released slowly or during times of

low flow. Spills can be cleaned up using dry chemicals and not be hosed down the drain. Chemical handling procedures can be modified to reduce the likelihood of spills and chemicals can be stored in diked areas to contain spills that do occur.

In all cases implementation of the above procedures requires good training of all personnel in proper operating procedures to control shock loading. Part of this training must include making production personnel aware that their procedures impact waste treatment. This factor is becoming increasingly important as some facilities have had to curtail production in order to achieve discharge compliance levels. Treatment plant personnel also must be trained in the proper operating procedures to mitigate the impact of a shock load. This action may be diverting flow to sidestream equalization, bypassing an oil water separator while a non-oily hydraulic shock load is occurring, notifying production to stop or slow an excessive discharge, or other appropriate procedures.

Poor Understanding of O&M Procedures

A good understanding of O&M procedures is essential to operate successfully a facility for the treatment of metal finishing wastes. An operator who is well versed in the proper O&M procedures can usually operate the treatment facility to meet permit compliance even though one or more of the above causes of permit violation exists at the treatment facility. This manual was developed to assist operators in implementing the proper O&M procedures at the treatment facility. While no manual can be general enough for all plants and yet specific enough for one plant, the intention of this manual is to aid in the understanding of the cause/effect relationship for several treatment processes. Once an operator has developed a cause/effect relationship for the control variables at the treatment facility, then specific adjustments and/or setpoints can be established. A successful O&M program will be attained when the operator can identify a potential problem, understand the cause of the problem and what effect it will have on compliance, and then adjust the control variables so as to mitigate the problem.

Poor Process Control

One of the most common causes of continuous poor performance and frequent non-compliance is poor process control. Poor process control results in the treatment plant not achieving its full capacity and efficiency. When the full or design efficiency is not achieved, the blame is put frequently on poor design, but it must be remembered that the design is based upon the assumption of good process control which may or may not be occurring. Good process control can only be achieved by well trained operators who know and understand their equipment and the impact of all operating variables under their control. This includes understanding the interaction between operating variables and the trade-offs often involved. As an example, increasing the belt tension in a belt filter press can result in a drier cake but will also result in more solids in the filtrate and a shorter belt life. However, the solids in the filtrate might adversely affect the performance of other treatment processes such as an oil coalescer.

Process control through good operations is particularly important in the metal finishing industry where several waste treatment processes require critical control of operating variables to achieve good treatment performance. Examples include pH control for metal precipitation, and pH and oxidaton-reduction potential (ORP) control for chromium reduction and cyanide oxidation. A relatively slight change in these operating variables can result in significant degradation in performance, non-compliance, and in the case of cyanide reduction, the potential for release of toxic gases.

Equipment Failure

Equipment failure can readily cause a treatment plant to fail to meet regulatory compliance levels. The impact of the equipment failure can be minimal when repairs are implemented quickly or the impact may be major with parts and repairs taking days to obtain and install. It is therefore essential to minimize equipment failure and downtime. This

minimization of downtime can be achieved partially by a sufficient parts inventory and overdesign; it also requires good operation and maintenance of existing treatment plant equipment. Mechanical equipment has a set of design operating conditions and any time these conditions are exceeded, premature equipment failure can occur. Treatment plant personnel should be aware of these design conditions and integrate them with plant operating procedures to insure that mechanical equipment is not unduly stressed. It should be noted that this stress does not always come from mechanical forces. Improper pH levels can corrode equipment and excessively high temperatures can cause materials of construction to fail. Once equipment failure has occurred, prompt repair of equipment by well trained maintenance personnel is essential to minimize the impact and prevent recurrence.

Good operations and maintenance can also prevent equipment failure by a regular and orderly inspection of equipment for wear or other early signs of equipment failure such as vibration. A good preventive maintenance program is another essential facet of preventing premature equipment failure.

Treatment Plant Design Inadequacies

No amount of good operations and maintenance can make a poorly or improperly designed treatment plant achieve consistent compliance with regulatory standards; conversely, poor operations and maintenance can make even the best designed treatment plant fall into noncompliance. Before any major design modifications are implemented, the potential for treatment plant performance improvement through improved O&M should be investigated thoroughly.

RECOMMENDATIONS FOR IMPROVING PERMIT COMPLIANCE

The level of pollutants that may be discharged to publicly owned treatment works (POTW) is regulated by the USEPA. Specifically, the

level of pollutants dischargable by a plant falling within the electroplating and metal finishing point source categories is limited by regulations issued in the Federal Register on July 15, 1983.[10] A copy of these regulations is included as Appendix B of this manual.

Improving the level of permit compliance for treatment of metal finishing wastes is a two-step process. The first step is to identify the problem and the second step is to take the necessary corrective actions. Permit compliance problems generally will fall into the following four categories: 1) design, 2) operation, 3) administration, and 4) maintenance.

As mentioned elsewhere in this report, the importance of proper design cannot be overstated. Each unit process along with the integrated waste treatment system must be designed with numerous factors accounted for. A system which is improperly designed will seldom be a system which can be operated well. Improvement of permit compliance by improving design is a long-term process; near-term improvements are seldom attainable through design changes.

A well-designed system may not perform as expected because of improper operating procedures. A number of instances of improper operation have existed; improvement of operation is a direct function of the operators' familiarity with correct O&M procedures. It is the goal of this publication to provide adequate O&M procedures and troubleshooting guides to produce improved levels of permit compliance in metal finishing waste treatment plants.

Administration also affects permit compliance, although often in an indirect manner. Such items as staff supervision, motivation, funding, and planning affect the operation of a facility, which in turn affects all aspects of the treatment plant.

Finally, maintenance affects permit compliance directly. In numerous instances throughout the descriptions which follow, routine inspection and maintenance are cited as the chief deterrents to operating

problems, and hence to permit violations. A competent, well-trained maintenance group is indispensable in the smooth and successful operation of a treatment plant.

Although the tendency is to categorize permit compliance problems as belonging strictly to one of the four areas discussed above, in fact most problems have aspects of two or more areas. A plant which hopes to improve its permit compliance must strive to achieve improvement in all four areas.

RESOURCE RECOVERY[1]

Pollution control legislation has affected industry by increasing the economic penalty associated with inefficient use of raw materials. In the plating industry, for example, loss of a raw material in the wastewater can result in three distinct cost items: replacement of the material, removal of the material from the wastewater before discharge, and disposal of the residue. Similar cost items exist for process water: replacement of water (no longer inexpensive to purchase) used in processing, processing the water in the wastewater treatment system, and processing the water by the treatment plant after discharge into a sewer system.

In response to the incrased cost of raw material losses, plating shops are modifying their processes to reduce these losses as well as water consumption. Recent years also have seen the cost-effective application of various separation processes that reclaim plating chemicals from rinse waters, enabling both the raw material and the water to be reused.

The impact of resource recovery and pollutant load reduction modifications on waste treatment and solid waste disposal costs must be measured if these modifications are to be evaluated. Cost of sophisticated treatment necessary for electroplating wastewater and of residue disposal often provides a significant economic incentive for resource recovery.

Modifications for reducing the pollutant or wastewater loading on a treatment facility range from using flow restrictors to eliminate excess dilution in rinse tanks to installing recovery units, such as reverse osmosis and evaporation, to separating plating chemicals from rinse water for recycle to the plating bath. Actions that can minimize wastewater volume include the following:

- Implementing rigorous housekeeping practices to locate and repair water leaks quickly,
- Employing multiple counterflow rinse tanks to reduce rinse water use substantially,
- Employing spray rinses to minimize rinse water use,
- Using conductivity cells to avoid excess dilution in the rinse tanks,
- Installing flow regulators to minimize water use,
- Reusing contaminated rinse water and treated wastewater where feasible.

Steps to minimize pollutant loading include:

- Implementing a rigorous housekeeping program to locate and repair leaks around process baths, replacing faulty insulation on plating racks to prevent excessive solution drag-out, installing drip trays where needed, and so forth,
- Using spray rinses or air knives to minimize solution drag-out from plating baths,
- Recycling rinse water to plating bath to compensate for surface evaporation losses,
- Using spent process solutions as wastewater treatment reagents (acid and alkaline cleaning baths are obvious examples),
- Using minimum process bath chemical concentrations,
- Installing recovery processes to reclaim plating chemicals from rinse waters for recycle to the plating bath,
- Using process bath purification to control the level of impurities and prolong the bath's service life.

Closed-loop chemical recovery from a rinse stream can often provide the solution to treat. Applying a closed-loop recovery system to a plating operation eliminates the need to treat the rinse water normally associated with that step.

In the case of rinse streams requiring pretreatment (for example, cyanide or chromium) or rinses containing pollutants not effectively removed by conventional end-of-pipe technology (for example, some types of complexed metals), installing a closed-loop system to recycle the rinse may reduce the investment needed to comply with the effluent quality limitations.

SECTION 4

EQUALIZATION

INTRODUCTION

One of the most frequently encountered problems in metal finishing wastewater treatment is process upsets related to intermittent high flowrates and highly variable contaminant levels. Batch discharge of high strength plating solutions and plating wastes often can cause large fluctuations in flowrates, pH, metals concentrations, cyanide concentration, and other critical contaminant levels. These fluctuations are often so severe that process upset and subsequent permit violations can occur before the system is able to compensate. For this reason, wastewater equalization often is implemented to control the extreme fluctuations in flow and contaminant concentrations. Likewise, whenever treatment process upsets occur, especially on a periodic basis, proper equalization should be one of the first operating conditions to be checked.

THEORY OF OPERATION

Wastewater equalization can accomplish three basic tasks. The first is hydraulic or flow equalization which dampens hydraulic surges to downstream treatment processes. Flow equalization can only be accomplished by placing some type of variable liquid volume storage tank in the wastewater flow path upstream of sensitive process equipment. The liquid is stored in the variable volume tank during high flow periods and then is released during low flow periods. Therefore, the hydraulic equalization power is directly related to the utilized <u>variable</u> volume of the tank.

The second equalization task is contaminant or concentration equalization. Contaminant equalization is accomplished by mixing low and high contaminant concentration wastewater, which results in an average concentration with dampened fluctuation. As with flow equalization, some type of storage must be provided which stores highly (or slightly) contaminated flow until such time as the contaminant concentration cycles to the other extreme. Contaminant equalization can be accomplished by placing in the flow path a storage tank and mixer with sufficient volume to mix the low and high concentration wastes or by collecting only the high concentration wastes in a storage tank and bleeding them back during periods of low contaminant concentration. The latter system has the disadvantage that the contaminant concentration must be monitored continuously and rapid action taken based on instantaneous contaminant concentration.

The third equalization task, an offshoot of the earlier discussed two, is to allow means to control the load that reaches the process within limits set by the operator. This is accomplished by positioning the outlet line near the bottom of the equalization basin and providing valving that allows the operator the option of increasing or decreasing flows to his process from the equalization basin. The operator would have the option of lowering flow during period of high concentrations and raising flows during periods of low concentrations and could control the load to the process to limits desired. This system has the disadvantage that it requires more analytical work than the other two systems and requires a larger equalization tank that will allow the operator to vary the tank level and has the advantage that it will reduce the possibility of organic shock and allows much finer control of the process.

Mixing is an integral part of all equalization techniques. Flow equalization requires mixing to keep suspended material in suspension. Without it, solids will accumulate in the storage tank thereby reducing the effective volume of the tank. Contaminant equalization requires mixing to blend the low and high strength wastes together. Typically, the mixers are vertical shafts with turbines or marine propellers. If

tanks are deep, draft tubes are installed or multiple impellers are placed on elongated shafts. Horsepower requirements for equalization mixing typically run between 0.02 and 0.04 horsepower/1000 gallons if gritty material is not present in the waste.* If, however, gritty material is present, horsepower requirements for mixing can exceed 2.5 horsepower/1000 gallons. In all cases, if mixing is occurring in circular tanks, then baffles must be installed on the sidewalls.

DESCRIPTION OF EQUIPMENT

Wastewater equalization can be accomplished by a number of different methods. Some equalization occurs in sewer lines. Pollution control equipment also has some surge capacity available to dampen out fluctuations. However, due to the nature of the variations in the metal finishing industries, these methods provide little if any effective equalization. Several typical equalization methods other than inherent system equalization are described below.

Batch Processing

Equalization by batch processing involves storage and batch processing of the wastewater in the same tank. To accommodate continuous systems, multiple reactors are operated in parallel. When one reactor is full, the flow is switched to another reactor while the wastewater in the first reactor is being treated. Reactor storage capacity must be sufficient to handle the maximum volume of wastewater that could be generated during the time it takes to treat the wastewater and empty wastewater from the other reactor (see Figure 2(a)). Alternatively, the

*This and the following sections present information in a mix of English Engineering and metric units. This mix of units occurs because, although metric units are now preferred for data reporting, many of the quantities are reported still almost exclusively in English units, and "rules of thumb" have been cast in these units. A table of metric-English conversions is provided with this report as Appendix C.

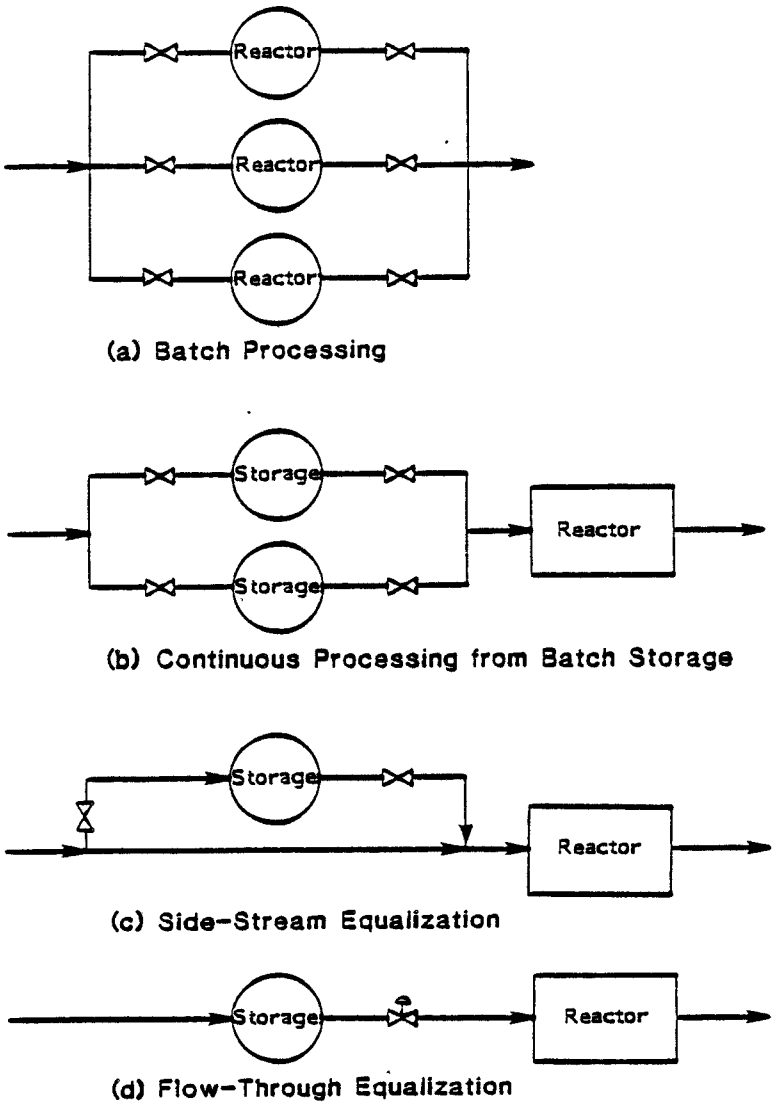

Figure 2. **Methods of equalization.**

SOURCE: EPA REPORT NUMBER 600/2-81-148

system can be operated in batch mode with one tank when the system is used to treat wastewater flows from batch type plating operations. This technique is employed often when specialized treatment is required for intermittent waste flow.

The batch processing procedure is a very effective equalization technique since wastewater in the treatment reactor is consistent for each treatment cycle. The system, however, requires that either the flow must be intermittent with sufficient time for wastewater treatment to occur between flows, or multiple reactors must be provided. The latter is usually prohibitively expensive. Therefore, this process is found primarily on small intermittent flows from batch metal finishing operations whose wastewater requires specialized treatment, such as plating solutions which contain high concentrations of cyanide or chromium.

Continuous Processing from Batch Storage

Continuous processing from batch storage usually involves two storage tanks operating on a fill-and-draw cycle. While one tank is being filled, the other tank is being discharged to a waste treatment facility (see Figure 2(b)). This procedure is unlike batch processing, in which the equalization and waste treatment steps occur in the same vessel. Using this technique the waste treatment facility receives a waste stream with uniform characteristics while processing the contents of an individual tank. The stream characteristics, however, often vary significantly from tank to tank.

This equalization technique requires either automated influent and effluent valves controlled by level indicators in the batch equalization tanks, or intensive operator supervision. The equalization tanks must be sized such that the volume from at least one flow cycle or contaminant concentration cycle can be collected in one tank. If contaminant equalization is desired, the tanks must also be mixed. This system is best suited for relatively small flows and/or rapidly varying (cycling) flows that will permit reasonably sized tanks. Its primary deficiency

is that some degree of automation or labor is required to operate it. Also, the step change in reactor feed characteristics that occurs when the flow is switched from one storage tank to another can be a disadvantage unless the operator keeps his knowledge of tank concentrations updated often.

Side-Stream Equalization

The side-stream equalization method involves the collection and storage of flow or contaminant concentration surges that result from scheduled dumping operations in the production plant. The surge is diverted to a storage vessel for subsequent processing during slack periods. This procedure is sometimes used to store an alkali waste in a plant for future combining with a waste stream that is normally acidic. The collected alkali could be dispensed into the normally acidic waste stream to reduce consumption and cost of neutralizing reagents. The reverse is often practiced to acidify hexavalent chromium wastes prior to reduction (see Figure 2(c)).

Side-stream equalization for contaminant surges is usually implemented by manually opening diversion valves or directly pumping to the storage tank. The major problem with the system is that either advanced knowledge of the event must be available or online monitoring equipment must be installed. With the possible exception of monitors for flow, conductivity, and pH, on line monitoring is very difficult and expensive to implement and maintain. Probably the best implementation of this type of equalization is as a spill collection tank which can be used to collect and hold spills if and when waste treatment personnel are notified of the spill fast enough to implement the system.

If only flow equalization is required, side-stream equalization can be very effective. It can be implemented either using flow meters connected to pumps and control valves or by a passive system of weirs that diverts excessive flow to a storage tank. The stored water can then be pumped back into the system during low flow. The major advantage of the system is that it requires minimal storage volume and is

reliable and relatively simple to implement. The major disadvantage is that it provides little contaminant equalization.

Flow-Through Equalization

The system of flow-through equalization dampens and greatly reduces flow and concentration variations, but does not eliminate them. Typically the system operates on a continuous basis and requires a large tank, mixers, tank baffles, and effluent control devices such as weirs, orifices, control valves, or pumps (see Figure 2(d)). For flow equalization, the tank must be designed to fluctuate in volume in response to influent flow rates. For contaminant equalization, the tank must be large enough to hold the volume which corresponds to the discharge cycle of high or low concentration wastes. The more cycles the tank can hold, the better the equalization achieved. The mixers for contaminant equalization must be sufficient to keep the tank completely mixed and all suspended solids in suspension. If the tank is round, baffles must be installed along the side walls to assure good mixing. The effluent control devices selected will depend on the objective of the equalization. For contaminant equalization, broad crested weirs are frequently used. For simple and reliable flow and contaminant equalization, narrow weirs, proportional weirs, or orifices are used. Pumps or flow control valves are used for maximum flow equalization.

The major advantage of a flow-through equalization system is its simplicity of operation and the continuous nature of its discharge. Flow and contaminant concentration changes do occur, but very gradually. This gradual change usually provides downstream processes such as pH adjustment with adequate time to respond. The major disadvantage of the system is the large tank size generally required.

OPERATIONAL PROCEDURES

The objective of equalization is to limit fluctuations in wastewater flow and/or contaminant concentration to levels that will not adversely affect downstream treatment processes. Equalization can occur

on a continuous basis such as in a flow-through system or can be initiated upon demand as with side stream equalization.

Process Monitoring and Operational Criteria

Equalization monitoring takes two forms. First, with the exception of a continuous flow-through system, the wastewater must be continuously monitored for flow and/or contaminant concentration. Monitoring is required to indicate when flow should be diverted to side stream equalization or to determine the fill and draw cycles in batch equalization. Monitoring can be accomplished using either automated on-line equipment or by periodic measurements by the operator. The former is subject to breakdown and the latter is subject to slow response that may completely miss flow or contaminant surges. Therefore, it is necessary to implement both monitoring techniques whenever possible.

It is also essential that a form of monitoring be conducted by production personnel. Whenever production personnel anticipate generating an abnormal flow or contaminant surge, the production personnel must notify waste treatment prior to the event and indicate the time, magnitude, and duration of the the abnormal waste flow. Similarly, if a spill or accidental release of a large quantity of contaminants or water is detected in the production area, then production personnel must notify wastewater treatment personnel immediately. This information is a critical part of wastewater monitoring and is absolutely essential for effective operation of equalization equipment.

The second part of wastewater equalization monitoring is a periodic program to evaluate the effectiveness of the equalization process. As a minimum, this evaluation should occur monthly with batch systems or after any downstream equipment experiences operational problems which could be attributed to poor equalization. To be effective, the monitoring must be set up in a rigorous test program in which influent and effluent flow and contaminant concentrations are measured simultaneously. The frequency of sample collection during the test programs and the

duration of the program will depend upon the rate of flow and contamination variability. Typically, these variations follow some pattern and exhibit times of peak and minimum flow and contaminant concentration. To be effective, the monitoring program must collect sufficient grab samples to detect these variations, usually sampling every hour for 24 to 48 hours. In some cases, however, where the variations occur rapidly, more samples will be required. If possible, the days for equalization monitoring should be selected such that the maximum variation in flow and contaminants that has been experienced under normal operating conditions is occurring.

Upon completion of the test, the influent and effluent flow and contaminant concentration should be compared graphically by plotting influent and effluent parameters versus time on the same graph. The peak effluent values should be substantially less than the peak influent values and within the design operating values for downstream equipment. The maximum rate of change for effluent contaminant concentration must also be evaluated when the contaminant concentration can affect chemical feed rates in downstream equipment. Too rapid a change can result in poor performance of equipment such as pH controllers.

Process Control Strategies

For the most part, the operator has little control over the equalization process. For continuous flow-through equalization, control can be exercised by adjusting the pumping rate or orifice openings. For batch equalization processes, little control can be exercised over the equalization process, except for the fill-and-draw cycle which is usually dictated by flow patterns. Side-stream equalization, however, is directly controllable by operators by either adjusting set points on automatic monitoring equipment or by manually diverting the flow based on test results or information from production personnel. Rigid criteria for initiating side stream equalization can not be developed; however, the following facts should be evaluated:

- Sensitivity of downstream equipment to the surge.
- Potential for violating permit conditions if a treatment process upset occurs.
- Reserve capacity in side stream equalization tank for a second more severe surge.
- Likelihood of another event requiring side stream equalization prior to release of current equalization volume.
- Compatability of liquid currently in equalization tank with current waste stream (i.e., a current acidic wastestream should not be diverted to side stream equalization if a cyanide waste is currently stored there. Hydrogen cyanide gas could be produced).

In addition to the monitoring of process operating variables specific to side stream equalization, several general operating and maintenance procedures should be performed routinely on all equalization equipment. These include the following:

- Equalization tanks should be checked monthly for accumulation of solids on the bottom of the tank. When the solids accumulation significantly reduces tank volume, the tank must be cleaned.
- Equalization tanks should be checked weekly for accumulation of floating material. If the floating material interferes with weirs, pump intakes, level indicators, or mixers it must be removed.
- Tanks, baffles, mixers, and pipes should be inspected annually for condition of materials of construction. Corroded or worn parts should be repaired or replaced.
- Monitoring programs to evaluate the performance of equalization should be conducted approximately twice per year or after a treatment process upset that could be linked to inadequate equalization.
- Flow meters, level indicators, and on-line monitors should be calibrated annually or at the manufacturer's specified interval, whichever is less.

- All pumps, mixers, and automated valves should be included in a regular preventive maintenance program.

TYPICAL PERFORMANCE VALUES

Almost any desired level of equalization can be achieved by varying the size and type of equalization equipment. Therefore, performance criteria must be established for individual facilities based on the sensitivity of downstream treatment processes.

TROUBLESHOOTING GUIDE

A troubleshooting guide for operation of the equalization tanks or basin is presented in Table 1. Two major operating problems are considered; these are inadequate contaminant equalization and inadequate flow equalization. For each problem, several probable causes, checks and monitors, and corrective actions are given.

TABLE 1
EQUALIZATION TROUBLESHOOTING GUIDE

PROBABLE CAUSE	CHECK OR MONITOR	REASON	CORRECTIVE ACTION
OPERATING PROBLEM: 1. Contaminant equalization inadequate.			
1a. Broken or worn mixer impeller.	- Check condition of mixer impeller.	- Broken or worn impellers can dramatically reduce the efficiency of mixing.	- Replace if worn.
1b. Inadequate basin volume caused by solids deposits on the bottom of tank.	- Check for solids accumulations by draining tank or checking tank side wall depth with a pole or similar device.	- Reduced basin volume limits storage capabilities and hence equalization capacity.	- Clean tank and remove solids.
1c. Missing mixing baffles on circular tank.	- Check for condition of baffles on outer wall of circular tanks.	- Baffles must be present to break circular flow patterns which do not contribute to mixing.	- Repair or replace damaged or missing baffles.
1d. Improperly located mixer.	- Check location of mixers; stationary mixers may not have the proper impeller submergence and mixers in deep tanks may be missing draft tubes or multiple impellers. Submerged mixers too close to the surface may vortex and lose efficiency.	- The efficiency of a mixer can be dramatically affected by improper placement.	- Move and adjust as required. Reference manufacturer's recommendations and design specifications.
1e. Inadequate basin size.	- Conduct monitoring program to determine if basin is large enough to contain wastewater flow between low and high flow and/or contaminant cycles. (Note: for good equalization more than one cycle volume may be required).	- Inadequate basin volume limits storage capacity and hence equalization capacity.	- Modify or add tank volume as required.
1f. Inadequate mixing horsepower.	- Check mixing horsepower; check for solids deposition in equalization tank.	- Mixing is directly related to input horsepower.	- Add mixing horsepower as required. Reference manufacturer's recommendations. Typical values range between 0.02 and 0.04 hp/1000 gallons. If gritty material is present, much larger mixing horsepower will be required.

TABLE 1
(Continued)
EQUALIZATION TROUBLESHOOTING GUIDE

PROBABLE CAUSE	CHECK OR MONITOR	REASON	CORRECTIVE ACTION
OPERATING PROBLEM 2: Flow equalization inadequate.			
2a. Flow meters or level indicators that control tank discharge are improperly set or calibrated.	- Check for proper setting and date of last calibration.	- These devices, when incorporated into the system, directly control the flow to and from the equalization basin.	- Calibrate and adjust as required. Reference manufacturers calibration procedure and design specifications for proper setting.
2b. Improper choice of effluent control device.	- Check type of effluent control device.	- Effluent control devices determine the degree of control that can be exercised on effluen flow. Pumps can provide best equalization followed by valves, orifices, proportional weirs, and narrow rectangular weirs.	- Modify discharge device as required.
2c. Leaks around effluent control devices.	- Check for erosion and wear around effluent weirs and orifice plates.	- The amount of flow equalization is directly proportional to the changes in tank volume. Also, in most equalization techniques, as the water level approaches the top of the tank, the effluent flow is dramatically increased to prevent overfilling.	- Repair or replace as required.
2d. Inadequate storage volume.	- Monitor tank level during operation.		- Modify tank design or effluent control devices as required.

SECTION 5

OIL REMOVAL

INTRODUCTION

The sources of oil found in metal wastewater are from cooling operations, cleaning operations, and lubrication. Oil is typically present in wastewater in three forms: free oils, emulsified oils, and soluble oils. Free oils in wastewater are those which rise to the surface of the wastewater due to buoyant forces in a short quiescent period. Emulsified oil is oil dispersed in the wastewater as small droplets which can range in size from 0.1 to 100 microns. Soluble oil is discussed in the next paragraph. A wide variety of oil removal processes is available for removing the free and emulsified forms of oil. The processes include skimming, coalescing, emulsion breaking, flotation, centrifugation, ultrafiltration, reverse osmosis, carbon adsorption, and biological oxidation. The most widely used and conventional treatment processes in the metal finishing industry are gravity separation and skimming, coalescing, emulsion breaking, and flotation. The other processes are not widely utilized at this time and, therefore, are not covered in this manual.

Soluble oils are those organic oils which are dissolved in the wastewater. Soluble oils are generally the lighter, more polar fraction of an oil mixture. Soluble oils are not removable by the techniques described in the preceding and in this chapter. Techniques such as gravity separation, flotation, and emulsion breaking result in removal of free and emulsified oil, but soluble oils remain dissolved in the wastewater. Soluble oils are, in general, biodegradable, so that the

most successful treatment for removal of soluble oils is often biodegradation in a biological wastewater treatment system.

Along with the topic of oil removal, the subject of total toxic organics (TTO) must be addressed. The materials which make up the TTO are listed in Appendix B; they are typically degreasing solvents used in the cleaning of metal parts. The waste solvents will contain oils, and will exist as free, emulsified, and soluble oils in the wastewater. The concentration of TTO in metal finishing wastewaters can be greatly reduced by proper handling and disposal of solvents and other organics, especially by segregation of these wastes for contract disposal or reclamation for recycle.

Control and management practices for waste solvents and other components which make up the TTO should be devised to follow resource recovery guidelines. Specifically, development of segregation facilities for these materials should be implemented, and disposal should be by a reputable contractor. The potential for reclamation of the organics should be explored; if reclamation is not feasible then disposal must be performed by a reportable disposal contractor. The importance of proper disposal for materials containing the compounds on the TTO list must be emphasized. Those materials are known to exhibit significant toxicity; severe environmental and human health problems can result from their improper handling or disposal.

THEORY OF OPERATION

The theory of operation for the equipment used to remove free and emulsified oil from wastewater is discussed below.

Gravity Separator

Separator design is based on the specific gravity difference between the dispersed oil globules and the wastewater. The lighter oil globules rise to the wastewater surface and are removed. The oil rise rate is described by Stokes' Law which states the rise rate is directly

proportional to the difference in the weight of the oil globule and the wastewater it displaces.

Emulsion Breaking

Emulsified oil is dispersed in wastewater as small droplets. These droplets can range in size from 0.1 to 100 microns. With pure oil and pure water, an oil emulsion is highly unstable since both phases quickly separate and assume a shape having the minimum interfacial area. With oily wastewater, however, an oil emulsion is often formed which is much more stable due to emulsifiers which alter the oil-wastewater interface.

Three common emulsifiers are electrical charge, chemical action, and mechanical assistance. Electrical charge emulsifiers establish a repulsive electrical field at the oil-wastewater interface. This type of emulsifier is normally a negligible cause of stability except for those wastewaters that have a low salt content or dilute oil concentrations. Chemical emulsifiers are materials such as soaps or detergents which cause chemical reactions at the oil-wastewater interface. Mechanical emulsifiers are finely divided colloids such as silt, clay, or metal fines which attach to the oil or are coated by the oil.

Emulsion stability is affected by droplet size, emulsion age, and wastewater viscosity. Smaller droplets are typically more stable. Emulsions generally become more stable with age because the emulsifier is transported to the oil through the wastewater by diffusion. A higher wastewater viscosity generally results in a more stable emulsion since there is more resistance to the movement of small droplets thus reducing the possibility of coalescence.

Coalescing Separator

Coalescing separators work in a similar manner to gravity separators with skimmers except that coalescing separators remove smaller and less bouyant particles. The basic principle of coalescing involves the preferential wetting of a coalescing medium by oil droplets which accumulate on the medium, and then rise to the surface of the solution. The

most important requirements for coalescing media are wettability for oil, large surface area, and contact between the oil particles and the coalescing medium.

Air Flotation

In a flotation process, fine gas bubbles are introduced into the wastewater. These gas bubbles attach to oil globules resulting in an aggregate with a specific gravity much less than that of the surrounding wastewater. The attachment of the fine, micron size air bubbles to the oil globules occurs by several mechanisms. The first mechanism is the adhesion of an air bubble to the oil globule by precipitation or by the collision of the air bubble with the oil globule. The second mechanism is the trapping of the rising air bubble under an oil globule floc structure. The third mechanism is the adsorption of the air bubble by an oil globule floc. The rise rate of the aggregate is described by Stokes' Law which states that the rate of rise is directly proportional to the difference in weight of the aggregate and the wastewater it displaces. The quantity of gas which can be dissolved in the wastewater is described by Henry's Law, which states that for gases of low solubility the gas mass dissolved in water is directly proportional to its partial pressure.

DESCRIPTION OF EQUIPMENT

Gravity Separators and Skimmers

Gravity separators normally remove free oil and little or no emulsified or soluble oil. The separators are used as primary treatment processes and are particularly applicable for the separation of large quantities of free oil.

Gravity separators range from lagoons with oil retention booms and oil removal devices to tanks with automatic oil skimmers. The American Petroleum Institute (API) has developed design criteria for gravity oil

separators. Separators based on these design principles are the most common type of oil separator and are referred to as API separators.

A line diagram of an API separator is presented in Figure 3. The separator includes a trash rack, a forebay with oil skimmer and baffle, an inlet diffusion device, and oil separation channels each with a scraper and oil skimmer. The trash rack removes sticks, rags, stones, and other debris. The forebay distributes the influent. The oil which rises to the surface in the forebay is retained by the baffle and removed by the skimmer. The inlet diffusion baffle reduces flow turbulence and distributes the flow equally over the channel cross sectional area. The free oil rises in the channels, is collected with the scraper, and is removed with the skimmer.

A variation of the gravity separator called the parallel plate separator is also commonly used. It consists of a gravity separator with parallel plates installed in the tank to assure laminar flow conditions. The small distance between the plates also reduces the distance the oil globule must rise, which in turn results in a decrease in the required actual surface overflow rate and detention time.

Emulsion Breaking

Chemical emulsion breaking can be accomplished as either a batch process or a continuous process. The emulsion breaking process resembles gravity separation except that concurrent chemical treatment occurs to break up the emulsified oil. The mixture of emulsified oils and water is initially treated by the addition of chemicals to the wastewater. A means of agitation (either mechanical or by increasing the turbulence of the wastewater stream) is provided to ensure that the chemical added and the emulsified oils are adequately mixed to break the oil/water emulsion bond. Finally, the oily residue (commonly called scum) that results rises to the surface and is separated from the remaining wastewater by a skimming or decanting process. The skimming process can be accomplished by any of the many types of mechanical surface skimmers that are presently in use. Decanting methods include

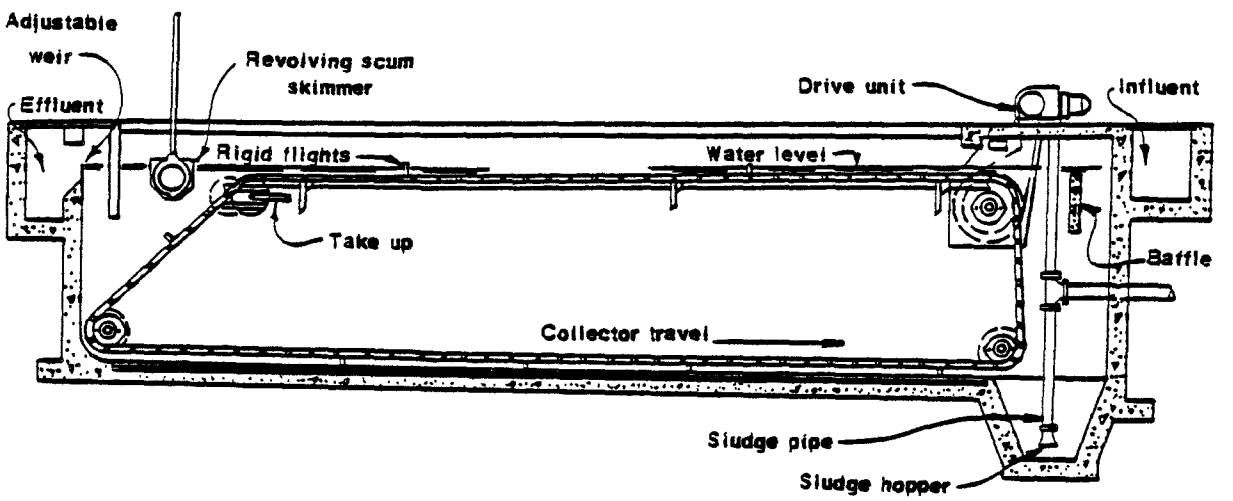

Figure 3. **API separator.**

removal of the oily surface residue via a technique such as controlled tank overflow or by removal of the demulsified wastewater from the bottom of the tank. Decanting can be accomplished with a series of tap-off lines at various levels which allows the separated oils to be drawn off the top or allows the wastewater to be drawn off the bottom until oil appears in the wastewater line. With any of these arrangements, the oil is usually diverted to storage tanks for further processing or hauling by a licensed contractor.

Coalescing

Coalescing also resembles gravity separation, except that the tank is filled with various configurations of coalescing media. The coalescing media can be plates, fibrous media, reticulated polyurethane foams, or loose media so long as they provide a tortuous path for the wastewater. Most media are installed in the form of relatively small diameter cartridges of a standard size, stacked in a parallel position. Orientation may be vertical or horizontal; however, horizontal designs can be more difficult to service since the entire separator vessel must first be drained.

Air Flotation

A variety of flotation methods are commonly used for oil-wastewater separation. The fundamental difference between these methods is the mechanism by which the air is introduced into the wastewater. The two most common methods are the dissolved air flotation (DAF) process and the induced air flotation (IAF) process.

Many variations of the DAF process are used. Three principal variations are full, partial, and recycle operation. Simplified line diagrams of the three principal DAF process variations are presented in Figure 4. These variations differ in the portion of the wastestream which is pressurized and saturated with gas. The full pressurization operation treats the entire influent wastestream. The partial operation treats a portion of the influent wastestream. The recycle operation

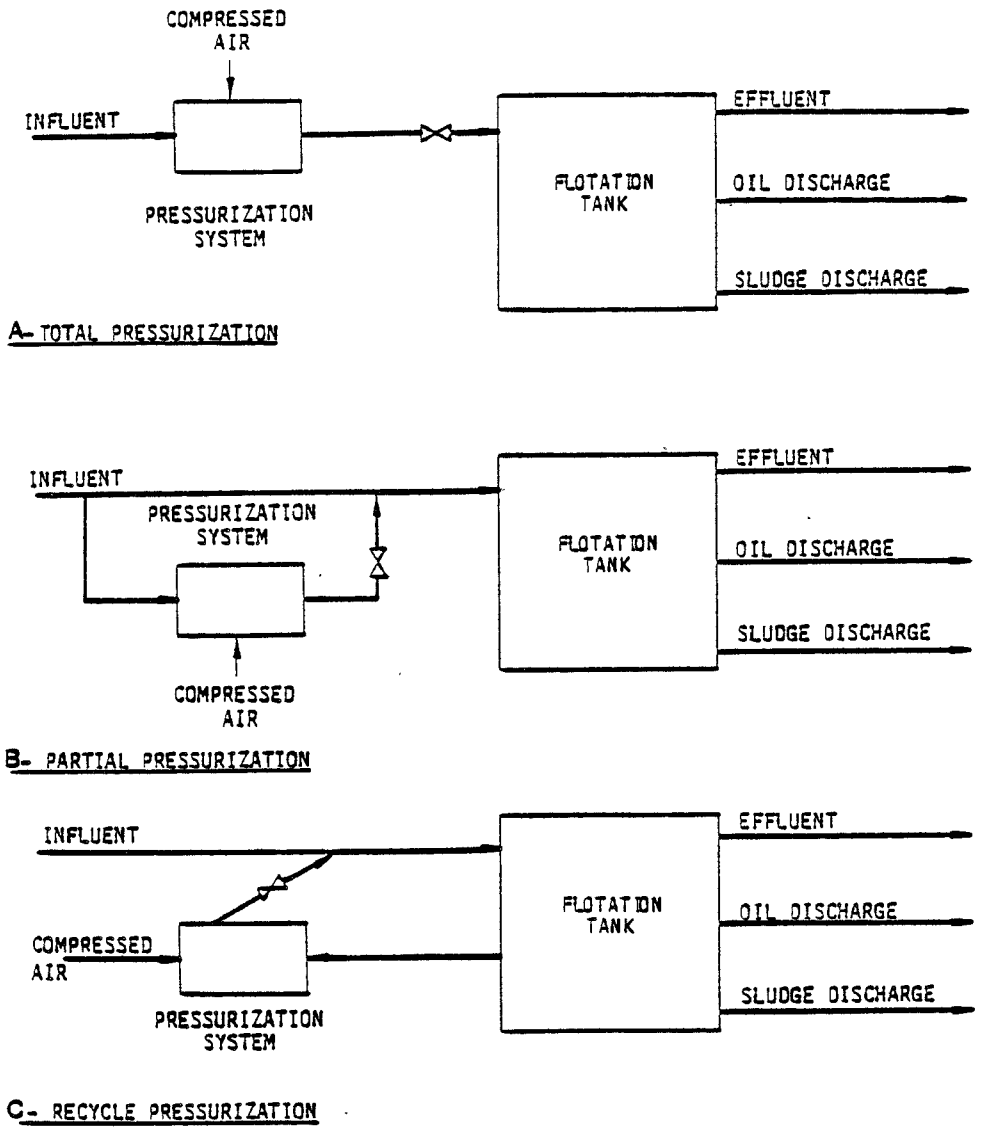

Figure 4. Line diagrams of principal DAF process variations.

treats a portion of the effluent wastestream. A typical recycle system includes a compressed air source, an aeration tank, a feed pump, and a flotation tank. The compressed air is dissolved into the return wastewater at an elevated pressure and stored in the aeration tank. The pressurized wastewater is subsequently mixed with the main wastestream and released to atmospheric pressure in the flotation tank where the dissolved air is released from solution as fine air bubbles, approximately 30 to 120 microns in diameter. The gas bubbles attach to the oil globules and the aggregate rises to surface and is collected.

The induced air flotation process consists of a multicelled tank, froth launders, a recycle pump, and static air inductors or aspirators. The flow through the cells is in series. The wastewater enters the first cell where air is introduced through the action of an aspirator. The aspirator utilizes recycle process effluent. The air is released in the cell in the form of air bubbles approximately 1000 microns in diameter, somewhat coarser than those in a DAF process. The air bubbles attach to the oil globules and the aggregate rises to the surface and is collected. The remaining wastewater flows through a baffle into the subsequent cells and ultimately out of the system. Alternate IAF separators use different methods to induce air into the wastewater. One system forces air under pressure into the liquid. Another common system induces air into the wastewater through high speed mixers.

DAF separators commonly include a chemical feed system to introduce coagulant aids such as polymers and metal salts, including ferric chloride, alum, and lime. IAF separators almost without exception include a chemical feed system. The chemicals are introduced at a variety of points in the system. Some systems include a separate rapid mix and flocculation chamber.

Skimming Devices

Skimming devices to remove floating oil are an integral part of API gravity, parallel plate, and coalescing separators. Four common

skimming devices are the rotary drum, the rotatable slotted pipe, the floating weir, and the belt (or rope) type.

With the rotary drum device, a horizontal drum approximately 0.3 to 0.6 meters (1 to 2 feet) in diameter is partially submerged in the wastestream. Skimming is accomplished as the drum rotates with the flow, picking up a thin oil film which is later scraped off the drum and removed. The depth of submergence is not critical as long as the drum is in contact with the oil layer. A submergence depth of approximately 3 cm (1 inch) is typical. The rotational speed is typically 0.15 to 0.45 m/sec (0.5 to 1.5 ft/sec), but the optimum speed depends upon the amount of oil to be removed and oil viscosity. The device typically results in a recovered oil that is low in water content.

With the rotatable slot device, a horizontal slotted pipe is submerged in the wastestream with the slots normally above the surface. Skimming is accomplished by rotating the pipe such that the slots are submerged, allowing the oil to flow into the pipe and to be removed. This device can result in a recovered oil that may be low or high in water content depending on the amount of care exercised in submerging the slot and adjusting it during the skimming operation.

With a floating weir device, a floating device suspends a horizontal weir in the wastewater channel. The device is weighted such that the weir crest is just above the water surface but below the oil surface. This positioning results in the oil flowing continuously into the weir channel. The recovered oil exits the channel to a discharge point via a flexible hose. The device typically results in a recovered oil high in water content.

With the belt (or rope) device an endless belt is pulled through the wastewater. Skimming is accomplished as floating oils adhere to the belt. After passing through the wastewater, the belt continues on a device located above the liquid level where the recovered oil is squeezed or scraped from the belt and removed. The oil viscosity

and attraction to the belt material affects the belt speed and performance. Baffles are commonly used to direct the floating oil to the belt. Belts are typically 0.3 to 0.6 meters (1 to 2 feet) in width. The device typically results in a recovered oil with low water content.

OPERATIONAL PROCEDURES

The objective of oil removal is to reduce free, emulsified, and soluble oil to a level that is acceptable for discharge. This often requires multiple steps that first remove free oil and then emulsified oil by emulsion breaking or air flotation.

Process Monitoring

The performance criterion for evaluating oil removal equipment is effluent total oil concentration. While this parameter provides the overall performance of the system, several other parameters must be measured and incorporated into a regular monitoring program to successfully and consistently operate an oil removal system. These parameters are listed in Table 2.

Of the parameters listed in Table 2, flow should be monitored continuously. Total influent and effluent oil along with pH, suspended solids, and temperature should be measured at regular intervals as specified or after any oil violation or process upset caused by excessive oil. Sampling may be either composite or grab with grab sampling normally preferred for oil measurements. Samples always should be collected in areas of sufficiently high turbulence to entrain free oil. Influent and effluent oils also should be analyzed for free, emulsified, and soluble oil fractions on a monthly basis or after poor performance of oil removal equipment is noted or suspected. More frequent analyses will be required if a plant upset or permit violation is suspected.

Determination of oil content of water is a critical procedure. Procedures for sample collection, storage, and analysis should be performed in strict accordance with established standards. Quality

TABLE 2

OIL REMOVAL
PROCESS MONITORING REQUIREMENTS

Parameter	Frequency	Comment
1. Flow	Continuously	To determine overflow rate and hydraulic retention time (HRT).
2. Influent total oil	Weekly	To determine mass loading of oil.
3. Influent free, soluble, or emulsified oil	Monthly	To determine mass loading for a particular form of oil.
4. Effluent total oil	Weekly	To determine performance and determine loading to downstream processes.
5. Effluent free, soluble, or emulsified oil	Monthly	To determine performance of the system.
6. Suspended solids	Weekly	
7. Waste oil volume	Weekly	To determine quantity of oil to be disposed.
8. Waste sludge volume	Daily	To determine quantity of sludge to be disposed.
9. Temperature	Continuously or per shift	Temperature will affect oil removal performance.
10. pH	Continuously or per shift	pH will affect oil removal performance.
11. Oil volume collected	Daily	To determine mass balance for oil.

assurance including duplicate analyses and blanks is indispensable. If a violation of permit conditions is detected, sample collection, storage, and analysis procedures should be investigated as part of an assessment of the plant program.

The analysis of samples for total oil content should be conducted according to one of the procedures given in the current edition of "Standard Methods for the Examination of Water and Wastewater".[9] While other techniques are commonly used, they may not be accepted by local regulatory agencies. "Standard Methods", however, does not provide a technique for differentiating between free, emusified, and soluble oil. This differentiation is particularly important when evaluating equipment that is effective in removing one oil classification, but not another. As an example, a gravity separator may appear to be malfunctioning because it is removing only a small fraction of the total oil. If the majority of the oil is free oil, this will be the case. If, however, the majority of the oil is soluble or emulsified oil, the gravity separator may be doing an excellent job removing the free oil that it was designed to remove. A procedure for determining the free, soluble, and emulsified fractions of oils is provided below.

Free Oil--

Place a measured amount of the raw wastewater in a separatory funnel. Shake the sample vigorously and let stand quiescently for approximately two hours. Draw off a portion of the subnatant and determine its oil concentration. The oil measured is the emulsified and soluble fraction. The difference between the total oil concentration and that measured is the free oil concentration of the wastewater sample.

Soluble Oil--

Place a measured amount of the raw wastewater in a separatory funnel and acidify with 10 ml/l of concentrated hydrochloric acid. Next, add 200 g/l sodium chloride and 5 g/l diatomaceous earth. Shake vigorously and let stand quiescently for a minimum of eight hours. Filter the mixture through a wet filter paper and measure the oil

concentration of the filtrate. The oil concentration measured is the soluble fraction of the wastewater sample.

Emulsified Oil--

The difference between the oil concentration of the emulsified and soluble fraction measured in the Free Oil determination and the oil concentration of the soluble fraction measured in the Soluble Oil determination is the emulsified oil concentration of the wastewater sample.

Example Calculations

Several example calculations are provided below for calculating operating parameters essential to operation of an oil removal system.

Hydraulic Retention Time (HRT)--

HRT is the average length of time wastewater spends in a process tank. Since the removal of oil does not occur instantaneously, it is essential that the wastewater spend a minimum time in the oil separator. The HRT calculation is:

$$HRT = \frac{VOL}{FLOW}$$

where VOL is the liquid capacity of the tank and FLOW is the flow to the separator. Note that the VOL and FLOW must be expressed in similar units such as cubic meters or gallons. As an example, if an oil water separator had a volume of 10,000 m^3 and the flow to the tank was 2500 m^3 per hour the calculation would be:

$$HRT = \frac{10{,}000\ m^3}{2500\ \frac{m^3}{hr}} = 4\ hr$$

Surface Overflow Rate--

Surface overflow rate is the process flow rate divided by the active surface of the area of a clarifier or oil water separator. The

result is usually expressed as gallons per square foot per minute and represents the loading on the treatment process with respect to its surface area. The loading can also be expressed as a velocity by converting gallons to cubic meters. This parameter is usually expressed as meters/minute and is used primarily for circular clarifiers and air flotation devices where it represents the average vertical velocity of the water from the submerged center feed well to the surface overflow weirs.

The surface overflow rate is calculated as follows:

$$\text{SURFACE OVERFLOW RATE} = \frac{\text{FLOW}}{\text{SURFACE AREA}}$$

where surface area is the quiesant area of the oil separator excluding influent and effluent weirs and baffles, and flow includes any recycle flow. As an example, if a 10-foot diameter dissolved air flotation oil water separator with a 3-foot diameter center feed well had a flow rate of 80 GPM and a recycle flow rate of 40%, the calculation would be:

$$\text{SURFACE OVERFLOW RATE} = \frac{80 + (0.4 \times 80)}{\frac{(10^2 - 3^2)}{4}} = 1.6 \text{ Gal/ft}^2\text{/min}$$

Air to Solids Ratios (A:S)--

The air to solids ratio is used in conjuction with the air flotation process and represents the ratio of the mass of applied air to the mass of oil. This ratio is calculated as follows:

$$\text{A:S ratio} = \frac{8{,}990 \text{ SCFM}}{\text{OIL CONC} \times \text{FLOW}}$$

where OIL CONC is oil concentration in milligrams per liter (mg/L), FLOW is wastewater flow in gallons per minute (gpm), and SCFM is air flow in standard cubic feet per minute (scfm).

As an example the air requirement for a dissolved air flotation tank with an influent oil concentration of 60 mg/L, a flow rate of 50 GPM, and an A:S ratio of 0.03 would be calculated as follows:

$$SCFM = \frac{0.03 \times 60 \times 50}{8,990} = 0.010 \text{ SCFM}$$

Process Control Strategies

Gravity Separation & Skimmers--

Gravity separators typically offer minimal opportunity for operator control. Periodically, the tank must be checked for solids deposits on the bottom of the tank or on the parallel plates if a plate separator is used. Similarly, if any influent and effluent weirs are used they must be periodically checked for trash and debris accumulations which might impede even flow distribution. The weirs must also be checked to assure they are level and to maintain proper liquid depth. The latter is extremely important when slotted pipes are used to remove the collected oil.

The hydraulic retention time and surface overflow rate should also be calculated and compared to equipment design values. Flow to an oil water separator is usually not controllable, but the calculations can indicate if the system is overloaded or requires more equalization. Similarly the temperature and suspended solids should be monitored. Cold temperatures can reduce the rise velocity of oil globules by as much as 50% and high suspended solids can lead to rapid solids accumulation in the tank.

The oil removing or skimming equipment should be checked daily for proper operation and depth of floating oil blanket. Excessive blanket depth, i.e., more than a few inches for most equipment, can rapidly lead to a system failure. Rotary drum and belt skimming devices should be checked at least weekly for drum or belt surface integrity, scraper blade integrity, and tension against drums. Rotating slot skimming devices should be checked as often as required to keep oil blanket depths within safe operating ranges. Care must be taken in operating the slots to prevent excessive water entrainment. The slots must also be checked periodically for levelness and accumulation of trash or debris. Floating weirs must be checked daily to make sure trash is not

collecting on the weirs and to make sure the weirs are free floating and properly balanced. Periodically, the flexible hose must be checked for integrity.

Coalescers--

The operation of coalescers is essentially the same as that for gravity separators. The frequency of inspection for solids accumulation and plugging of the coalescers must, however, be on at least a monthly basis.

Emulsion Breaking--

Chemical addition is not a separate unit process for oil-water separation. Rather, it is used prior to or in conjunction with other separation processes. Chemical addition is first used to break or demulsify emulsified oils in the wastewater. The treatment is usually directed toward destabilizing the dispersed oil droplets or chemically binding or destroying any emulsifying agents present.

As previously stated, chemical demulsifying processes include acidification, coagulation, salting out, and demulgation with organic cleaving agents. Acids generally cleave emulsions more effectively than do coagulant salts, but are more expensive. In addition, the resultant wastewater must be neutralized after separation. Coagulation with aluminum or iron salts may be effective and is commonly used. However, the resultant hydroxide sludges may be voluminous and are difficult to dewater. Coagulation with polymer may be effective and is sometimes used. The resultant sludge quantities are smaller than those for metal salts but are sometimes more difficult to dewater. The salting out of an emulsifier may be achieved with the addition of large quantities of an inorganic salt, thereby increasing the dissolved solids content of the wastewater. Organic demulgators may be extremely effective demulsifying agents but are generally very expensive and specialized. Demulgators are normally considered only if they are found to be effective in extremely low concentration due to cost and, in many cases, their toxicity at higher concentrations.

The effectiveness of chemical pretreatment is normally determined with bench scale jar testing. A representative wastewater sample is split into several aliquots. Each aliquot is reacted with a different quantity of the chemical under consideration. After each addition, the aliquots may be flash mixed, flocculated, and quiescently settled and then examined to note any reaction and emulsion breaking and the rate and effectiveness of separation.

One typical procedure for jar tests is that suggested by the Tretolite Division of Petrolite Corporation, in their Industrial Bench Testing Procedures Manual.[11] The procedure is as follows.

1. Secure appropriate sample for testing.
2. Fill one liter beakers to either 500 or 1000 ml mark. Test volume is dependent on volume of sample available and volume required for water quality analysis.
3. Place beakers on paddle mixer and begin mixing at maximum speed.
4. Dose beakers with appropriate chemical(s) and appropriate volumes.
5. Mix on high speed for 1 minute.
6. When chemical additions and 1 minute rapid mix intervals are complete, reduce stirrer speed to slow mix for 1 minute minimum. (Note: Mix times can be varied to more closely duplicate full scale system).
7. Turn mixer off and remove beakers for settling. Settling time is dependent on system and rate of contaminant removal (10-30 minutes should prove adequate).
8. Wipe paddles clean with a paper towel or rag in preparation for the next test.
9. Repeat steps 2-8 until the desired treatment program has been thoroughly investigated.
10. After the chosen settling time has elapsed, sample beakers for appropriate water quality analysis.

The jar test procedure is useful for determining the optimum pH for separation, the most effective coagulant and coagulant aid, the optimum chemical dosage and order of chemical addition, the required rapid and slow mix times, the required settling, and the estimated separation effectiveness.

The pretreatment chemicals may be added directly to a process line or may require separate rapid mix and flocculation chambers. The operation of these chambers is discussed elsewhere in this document under "Chemical Addition Equipment" and "pH Control".

Air Flotation

Air flotation, as compared to gravity separation, has several control mechanisms that are directly under the control of the operator. These include the system pressure, recycle rate, air to solids ratio, and chemical addition rate. The operator also has some control of surface overflow rate and hydraulic residence time. Typically increasing the system operating pressure and air to solids ratio will improve performance. However, care should be taken in increasing these because past a certain air to solids ratio very little improvement is obtained and a considerable amount of energy is expended. As the air to solids ratio is increased it may also be necessary to increase the recycle rate in order to provide sufficient water for air to initially dissolve. However, the increase in recycle rates will increase the surface overflow rate, a situation which can lead to performance degradation if the overflow rate exceeds the system design specifications.

The DAF pocess is typically operated with a 40 to 60 psig pressure, 20 to 50 percent recycle, 1 to 4 gpm/sq ft surface overflow rate, 1 to 2 minute aeration tank detention time, 0.01 to 0.06 air to solids ratio and 20 to 40 minute flotation tank detention time. Typically with the DAF process, compressed air is used as the feed gas because it is relatively inexpensive. However, inert gases are sometimes used instead. For example, nitrogen gas is used to minimize corrosion by keeping iron in solution. The choice of gas can depend also upon the nature of the

wastewater and any regulations concerning off-gas removal. The volume of froth layer produced in the DAF process is approximately equal to 0.2 to 2.5 per cent of the influent waste flow.

IAF separators typically use a recycle flow rate of 100 to 400 percent with 5 to 10 minute detention time and result in a froth production rate equal to 1 to 15 percent of the influent flow rate.

When operating air flotation units, pressure gauges and flowmeters should be checked daily for proper readings and calibrated on at least a yearly basis. In addition, any weirs should be checked monthly for trash or debris accumulation and levelness. If scraper arms are used to skim the float, they should be checked monthly for proper submergence, usually around 1/2 to 3/4 inches when water level is at the base of the weirs. They must also be checked for scraper blade integrity and proper seal when crossing the sludge hopper.

TYPICAL PERFORMANCE VALUES

The performance of oil removal equipment is extremely dependent upon the distribution of oil between the free, emulsified, and soluble forms. Gravity oil separators typically have produced an effluent with a total oil concentration between 50 and 100 mg/L. However, gravity separators with an emulsion breaking pretreatment step give typical performance ranges from less than detectable to 40 mg/L of effluent oil. Coalescers should provide slightly better performance than gravity separators. Limited information regarding their performance indicates that an effluent of 1 to 50 mg/L of oil can be achieved (includes units with and without emulsion breaking).

DAF and IAF separators typically produce effluents of equal quality. A flotation separator, preceded by a gravity or parallel plate separator, typically produces an effluent with an oil concentration less than 20 mg/L. When used without pretreatment, the flotation separator can produce an effluent with an oil concentration of 25 to 100 mg/L.

TROUBLESHOOTING GUIDE

A guide for troubleshooting the oil removal process is presented in Table 3. Six problem areas are noted; all the problem areas deal with either excessive oil in the aqueous effluent or excessive water in the collected oil phase. In many cases a detailed analysis of the oil emulsion breaking treatment will be required to correct the problem. Careful sampling, jar test evaluations, and oil analyses are required to define the problem and investigate corrective actions.

TABLE 3
OIL REMOVAL TROUBLESHOOTING GUIDE

PROBABLE CAUSE	CHECK OR MONITOR	REASON	CORRECTIVE ACTION
OPERATING PROBLEM 1: Gravity separator has high effluent oil concentration.			
1a. Flowrate too high.	- Check peak and average flow rate, hydraulic retention time (HRT), and surface overflow rate and compare manufacturer's recommendation and design criteria.	- Separators are designed to achieve quiescent conditions in the oil-water separation zone. Excessive flow promotes turbulence.	- Decrease flow rate; add more oil-water separator capacity; increase equalization if peak flow is excessive.
1b. Emulsified and/or soluble oil present.	- Monitor the free, emulsified, and soluble oil concentration entering and leaving the separator.	- Gravity separator is effective for free oil only.	- Troubleshoot Step 6; install emulsion breaking equipment if not present; control sources of soluble oil.
1c. Short circuiting of tank occurring.	- Check influent and effluent weirs and baffles for plugged, broken, or missing units. Check weirs for for levelness.	- When short circuiting occurs the oil does not have time to separate from the water.	- Clean, repair, replace, or adjust as needed.
1d. Separator tank filled with solids.	- Drain tank and inspect or rod with a pole to detect the presence of solids or sludges on the bottom of the tank.	- As the solids collect in the tank the HRT is decreased and the oil does not have sufficient time to separate from the water.	- Clean and remove all solids and sludges.
1e. Excessive floating oil blanket in separator tank.	- Monitor effluent for free oil and visually inspect for floating oil in effluent.	- If floating oil layer becomes too deep it can extend down to treated water effluent port.	- Adjust oil skimming devices as required.
1f. Change in influent characterization.	- Check viscosity, temperature, and density of oil-water solution and collected oil. Compare to original design conditions and manufacturer's recommendations.	- If process changes result in changes in the density and viscosity of the oil and water, the design requirement for gravity separators can change.	- Modify separator design as required.

TABLE 3
(Continued)
OIL REMOVAL TROUBLESHOOTING GUIDE

PROBABLE CAUSE	CHECK OR MONITOR	REASON	CORRECTIVE ACTION
OPERATING PROBLEM 2: Gravity separator has a very high water content in collected oil.			
2a. Holes or cracks in collection slots.	- Inspect and monitor for water flow when oil is not being removed.	- Treated water can contaminate collected oil.	- Repair as required.
2b. Poor operation of oil collection slot or tilted floating weir which allows water to enter.	- Monitor operation of collection slot. Inspect floating weir for levelness and presence of trash in weirs.	- Treated water can contaminate collected oil.	- Adjust equipment or instruct operators as required.
2c. Floating weir has improper ballast resulting in weir floating too low in water.	- Check distance between bottom of weir and oil-water interface.	- If water too close to the bottom of the weir, wave action caused by wind or hydraulic surges can cause water to enter the weir.	- Clear weir to remove heavy deposits; adjust weir as specified by manufacturer.
2d. Slot oil collectors are located too near the oil water interface.	- Check distance between slot and oil water interface during nonskimming operation.	- If water too close to the bottom of the slot, wave action caused by wind or hydraulic surges can cause water to enter the slot.	- Adjust as required (may require adjusting of an effluent weir opposed to adjusting slot).
OPERATING PROBLEM 3: Coalescer has high effluent oil concentration.			
3a. Coalescers clogged or broken.	- Drain tank and inspect.	- For proper performance oil must come in contact with coalescing plates and proper velocities must be maintained.	- Clean and repair as required.
3b. pH of oil-water solution different from design or normal operating condition.	- Monitor pH.	- pH can affect surface properties of oil droplets and their ability to coalesce.	- Adjust pH to design or normal operating conditions.
3c. See Step 2.	- See "Troubleshooting Gravity Separators"	- See "Troubleshooting Gravity Separators"	- See Step 2.

TABLE 3
(Continued)
OIL REMOVAL TROUBLESHOOTING GUIDE

PROBABLE CAUSE	CHECK OR MONITOR	REASON	CORRECTIVE ACTION
OPERATING PROBLEM 4: Air flotation unit has high effluent oil concentration.			
4a. Inadequate dissolved air being supplied.	- Monitor oil concentration; monitor air flow; determine air:solids (oil) ratio.	- Insufficient air being supplied to float the mass of oil present.	- Adjust as required; typical range is 0.01 to 0.06 pounds of air per pound of oil.
4b. Inadequate recycle flow.	- Check recycle flow rate.	- Recycle flow is often essential to provide enough water to dissolve the required air.	- Adjust as required; see design and manufacturer's recommendations. Typical values range from 20 to 50% recycle.
4c. Inadequate delivery pressure.	- Check delivery pressure and check calibration of pressure gauge.	- Insufficient pressure can result in the air not dissolving in the water.	- Adjust as required; see design and manufacturer's recommendations. Typical values range from 40 to 60 psig.
4d. Inadequate hydraulic retention time (HRT).	- Monitor flow rate; check tank for accumulation of solids; calculate HRT.	- Short HRT's do not allow sufficient time for solids to separate.	- Decrease flow rate; troubleshoot "Equalization"; clean tank. Typical values are 20 to 40 minutes.
4e. Excessive surface overflow rate.	- Monitor flow rate and calculate surface overflow rate.	- Large overflow rates can carry solids out of the tank and break foam..	- Decrease flow rate; troubleshoot "Equalization". Typical values are 1 to 4 gpm/sq ft.
4f. Short circuiting of DAF occurring.	- Check effluent weirs for plugging and levelness. Check influent baffles.	- Short circuiting can result in inadequate detention times.	- Clean and adjust weirs as required.
4g. Skimmer not removing solids fast enough.	- Inspect skimmers for broken scapers, proper submergence in the water, poor seal along the edges or sludge hopper; check speed.	- Air flotation foam breaks with time and can cause reentrainment of oil particles.	- Repair and replace damaged scapers as required. Adjust submergence and rotational speed as required.
4h. Improper chemical addition (where applicable).	- Check chemical feed pumps for proper operation, setting, and calibration.	- Inadequate chemical conditioning can result in significantly reduced performance of air flotation equipment.	- Clean, repair, and adjust as required.

TABLE 3
(Continued)
OIL REMOVAL TROUBLESHOOTING GUIDE

PROBABLE CAUSE	CHECK OR MONITOR	REASON	CORRECTIVE ACTION
	- Perform jar test to optimize type dosage and pH of chemical conditioning agent. The nature of the waste may have changed.	- Inadequate chemical conditioning can result in significantly reduced performance of air flotation equipment.	- Adjust chmical addition equipment as required.
	- If polymer is being used check initial dilution and placement of polymer addition.	- Proper mixing of polymer and waste essential. Polymers must be initially diluted to 0.1 to 0.5% for proper mixing to occur. Polymer can be sheared by injecting it upstream of a centrifugal pump.	- Adjust initial polymer dilution procedures as required. Change polymer addition point to assure adequate mixing prior to downstream release in air flotation tank. Move addition point of centrifugal pump.
OPERATING PROBLEM 5: Float from air flotation unit contains excessive water.			
5a. Leak in float collection hopper.	- Check hopper with skimmer arm turned off. If water enters hopper, leak is present in hopper or top of hopper located below water surface.	- Water contaminating concentrated oil.	- Repair or adjust as required.
OPERATING PROBLEM 6: Emulsion breaking is not converting all emulsified oil to free oil.			
6a. Poor mixing between oil and chemicals.	- Check mixing equipment for worn mixers, missing baffles, and adequate horsepower (See Table 1).	- Proper mixing of conditioning agent and waste water is essential for conditioning agents to be effective.	- Repair and replace as necessary.
6b. Improper conditioning agent or dosage.	- Perform jar test to determine optimum conditioning agent, dosage, and pH.	- Waste characteristics determine optimum conditioning agent, dosage, and pH.	- Adjust chemical addition equipment as required.
6c. Fluctuating or improper pH.	- See "pH Troubleshooting Guide."	- Most emulsion breaking breaking techniques are pH-sensitive.	- See "pH Troubleshooting Guide."

SECTION 6

CYANIDE OXIDATION

INTRODUCTION

Cyanide (CN^-) is used in the metal finishing industry to keep metal ions (zinc, copper, etc.) in the electroplating solutions from precipitating. Cyanide is typically added as sodium cyanide (NaCN) or hydrocyanic acid (HCN). Added either way, the cyanide ion is both highly toxic and soluble. Furthermore, if the pH of cyanide containing waste drops below 7, hydrogen cyanide gas (HCN) which is extremely poisonous will be evolved.

THEORY OF OPERATION

The most frequently employed method for treating cyanide waste is cyanide destruction by chlorination. Other oxidants such as ozone are used also. During the oxidation process, cyanide may be either partially oxidized to a less toxic form, cyanate (CNO^-), or completely oxidized to carbon dioxide (CO_2) and nitrogen (N_2). This corresponds to what is commonly referred to as "one-stage" and "two-stage" treatment respectively. Both stages can be accomplished using various forms of chlorine including chlorine gas dissolved in water, sodium hypochlorite (NaOCl), or calcium hypochlorite ($Ca(OCl)_2$). Acid hydrolysis is also used for destroying cyanate.

Chlorine Oxidation

The first stage of the cyanide destruction is chlorine oxidation of cyanide to cyanate. The equation for this reaction is:

$$Cl_2 + NaCN + 2NaOH \longrightarrow NaCNO + 2NaCl + H_2O$$

This reaction has an intermediate step that first converts chlorine gas to the hypochlorite ion (OCL^-) which then reacts with the cyanide. Because the oxidation reaction depends upon the presence of the hypochlorite ion, it is necessary to perform this reaction at a pH greater than 8.5. This requires that caustic (NaOH) be added to ensure that a pH greater than 8.5 is maintained at all times, and to maintain it during the reaction which consumes two caustic molecules for each cyanide ion oxidized. If the pH is allowed to decrease below 7.0, the reaction will stop and the highly toxic gas, cyanogen chloride, will be evolved. The overall reaction of cyanide to cyanate is both time and pH dependent. At a pH of 10.0 or higher, oxidation of cyanide to cyanate is accomplished rapidly and completely if oxidation periods of 30 to 120 minutes are maintained.[13]

The second stage of the cyanide destruction process is chlorine oxidation of cyanate to nitrogen and carbon dioxide which is then converted to bicarbonate and carbonate ions. This reaction depends upon the presence of hypochlorous acid (HOCl) for an oxidant, as opposed to one stage oxidation which requires the hypochlorite ion. Therefore the pH must be less than 8.5, normally in the range 8.0 to 8.5. The relationship between the cyanate oxidation reaction, pH, and required detention time is displayed in Figure 5. However, for actual plant operations a detention time of 60 minutes is recommended.[13] The chemical formula for cyanate oxidation is:

$$3Cl_2 + 6NaOH + 2NaCNO \rightleftharpoons 2\ NaHCO_3 + N_2 + 6NaCl + 2H_2O$$

As previously stated, the chlorine required for cyanide oxidation can be added to the system in several forms including chlorine gas, sodium hypochlorite solution, and calcium hypochlorite solution. Chlorine gas is quite soluble in water and when dissolved in water, chlorine hydrolyzes rapidly to form hypochlorous acid (HOCl) and/or hypochlorite ion (OCl^-) depending upon the pH. The effect of pH on the distribution

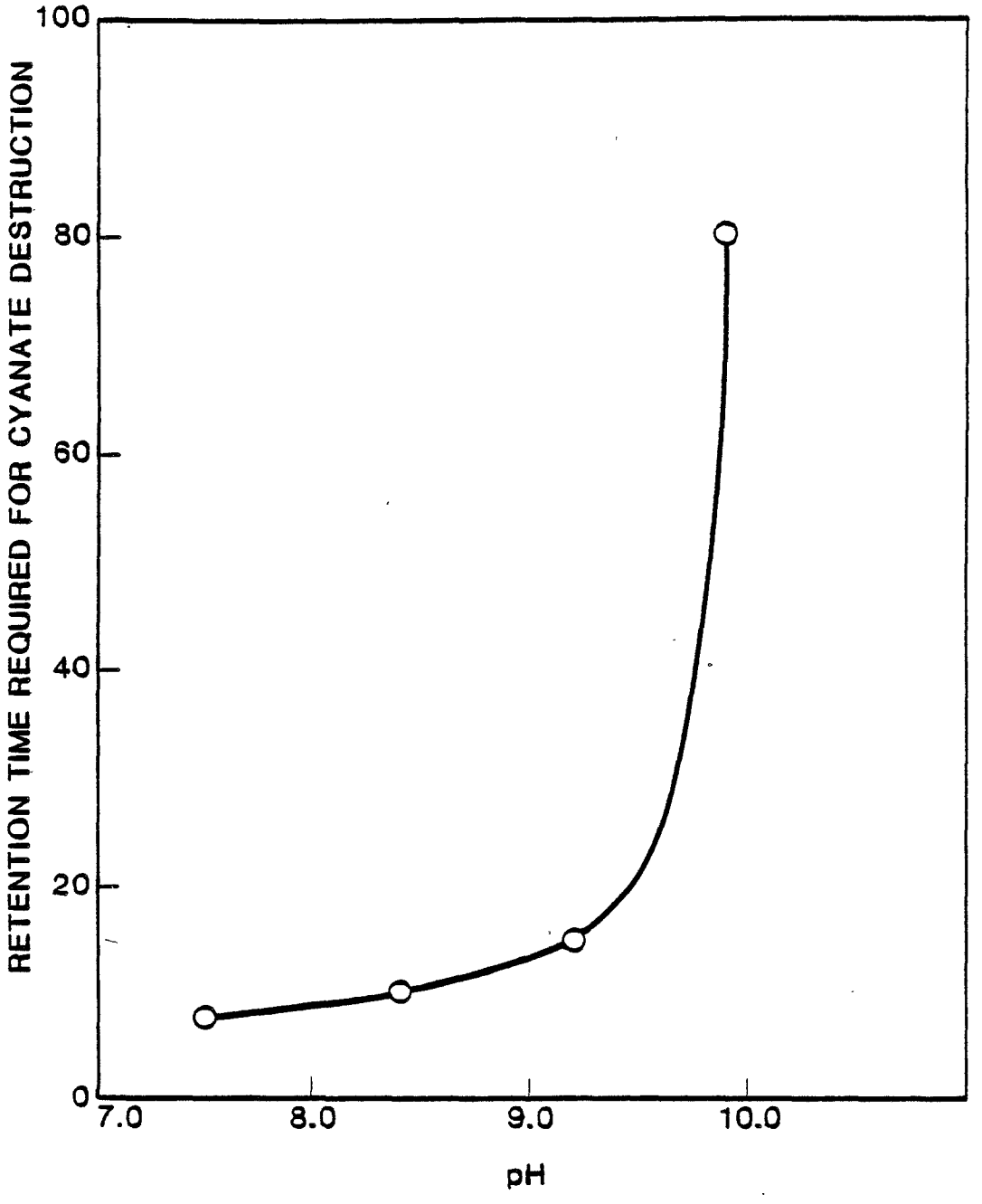

Figure 5. **Destruction time required for Cyanate vs pH.**

DATA SOURCE: SHINSKEY, F.G.; pH AND pION CONTROL IN PROCESS AND WASTE STREAMS, JOHN WILEY AND SONS, NEW YORK, 1973, pp.110–113.

of hypochlorous acid and hypochlorite ion in water at two different temperatures is shown in Figure 6. When dissolved in caustic and water (pH>8.5), chlorine will form the hypochlorite ion (OCl^-). The dissolution reaction for the hypochlorite ion is

$$Cl_2 + 2NaOH \longrightarrow 2Na^+ + OCl^- + Cl^- + H_2O.$$

It can be seen from the equation that one molecule (or one kilogram mole) of chlorine gas will require two molecules (or two kilogram moles) of caustic and will yield one molecule (or one kilogram mole) of hypochlorite ion (OCl^-). The ratio of chlorine gas to caustic is important because caustic and chlorine are generally added at a controlled ratio. Note that we generally add materials to be reacted by weight (kg or lb), although reactions occur by the molecule or mole basis. The mass in kilograms divided by the molecular weight gives the number of kilogram moles.

The main advantage of using chlorine gas is that the chemical cost is the lowest of the three oxidizing agents. However, there is a great disadvantage because chlorine gas is difficult to handle and is toxic. Therefore, the choice of using chlorine gas becomes a trade-off between materials handling-safety and cost.

Sodium hypochlorite (NaOCL) requires no preparation and can be used directly as an oxidizing agent. The main advantage in using sodium hypochlorite is that it is relatively easy and safe to handle and use. The use of calcium hypochlorite [$Ca(OCl)_2$] requires that, for best results, it be dissolved into solution before introduction into the oxidizing reaction. When calcium hypochlorite is not dissolved in water first, increased quantities of sludge will be produced.

Acid Hydrolysis

A second method for destruction of cyanate is acid hydrolysis. Acid hydrolysis is accomplished by lowering the pH to a value of 2 or 3 by adding sulfuric acid. Five minutes reaction time is required to destroy the cyanates.[13] Two disadvantages of this procedure are that

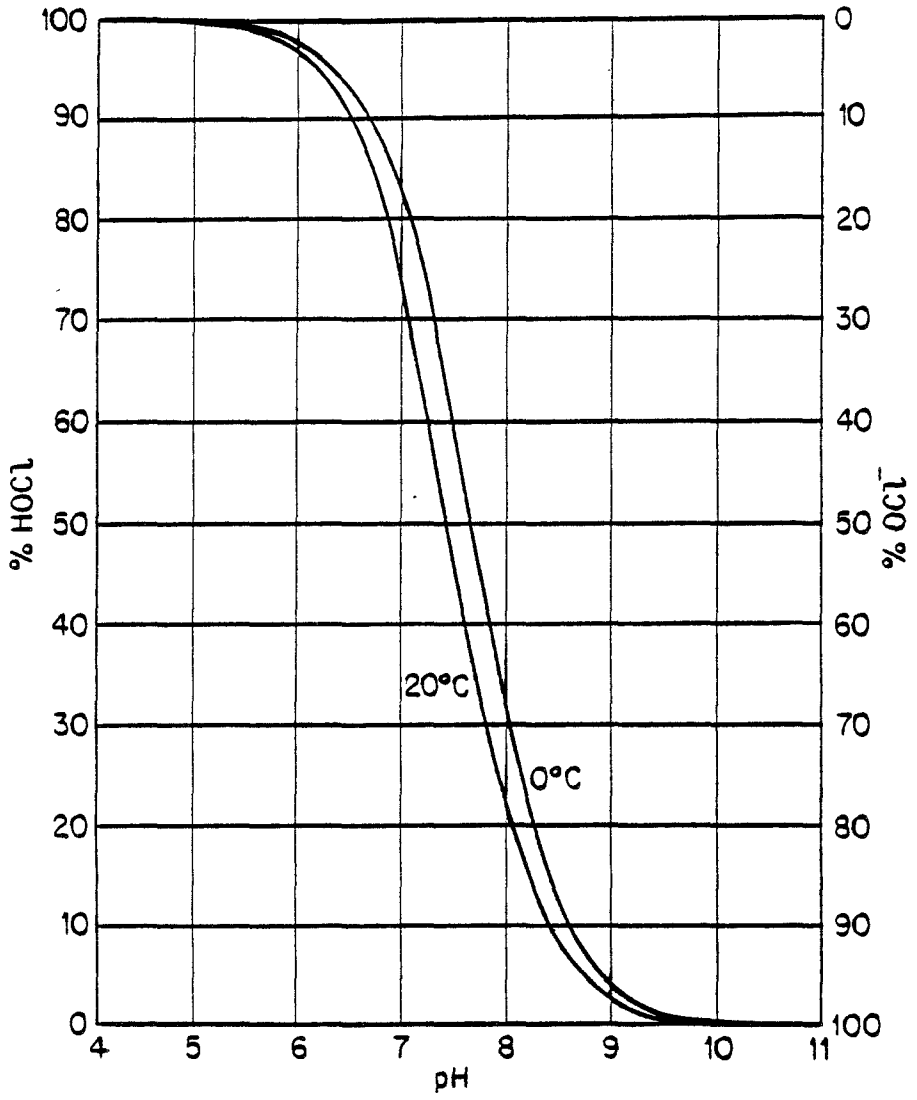

Figure 6. Distribution of HOCL and OCL.

SOURCE: SAWYER, C.N. AND McCARTY, P.L.; CHEMISTRY FOR SANITARY ENGINEERS, McGRAW-HILL BOOK COMPANY, 1967, p. 367.

the pH must be lowered to 2 to 3 with acid; then after hydrolysis, the pH has to be raised again to pH 6 to 9 for discharge. This requires significant volumes of neutralizing agents (both acid and caustic) which increases the total dissolved solids of the wastewater. Furthermore, if incomplete destruction of cyanides occurs in the first stage for any reason, hydrogen cyanide gas will be released when the acid is applied.

DESCRIPTION OF EQUIPMENT

Typical equipment for cyanide treatment consists of reaction vessels, mixers, pH controllers, and chlorinators. These can be operated in a batch or continuous flow mode. Either mode can be used to achieve single stage cyanide oxidation (the conversion of cyanide to cyanate) or two stage oxidation (the conversion of cyanide to CO_2 and N_2). A typical system for a continuous two-stage oxidation unit is shown in Figure 7. It includes two reaction vessels, two automatic pH controllers, two mixers, and a chlorinator with dual control circuits to control independently the chlorine dose for each reaction vessel based on reactor oxidation reduction potential (see Section 7, Chromium Reduction). When only single-stage cyanide reaction is required, the second reaction vessel is deleted from the system. The advantage of single-stage operation is reduced chemical and capital costs as compared to two-stage operation. The disadvantage of single stage oxidation of cyanide to cyanates is that cyanates are somewhat toxic. However, they are much less toxic than cyanides, but in some areas discharge of cyanates may not be allowed.

Batch cyanide oxidation equipment basically resembles the single-stage continuous equipment except that it is operated in a batch mode. This mode of operation requires either an intermittent flow or multiple tanks. In either case, increased operator involvement is required to fill and draw the tanks and to readjust the pH controller between the first and second stage when two-stage oxidation is practiced. For these reasons, batch treatment is seldom practiced when average flows exceed 15 GPM.

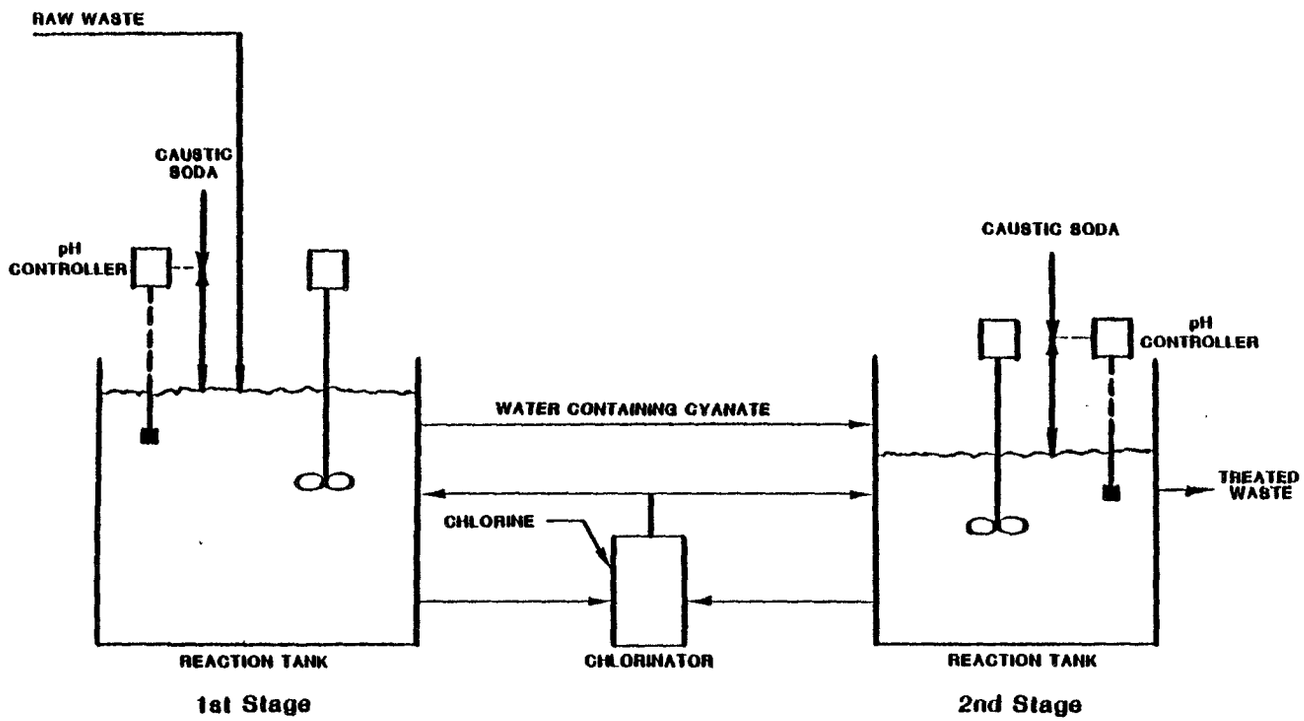

Figure 7. **Two-stage cyanide destruction.**

OPERATIONAL PROCEDURES

To control the operation of the cyanide destruction process, the operator should conduct the necessary process monitoring, perform any control calculations needed, and understand the process control strategies.

Process Monitoring

The main performance criterion used to evaluate the cyanide reduction process is the reactor effluent concentration of cyanide in one stage oxidation or the second reactor effluent concentration of cyanide and cyanate in two stage oxidation. While these parameters provide the overall performance, many other parameters should be measured and incorporated into a regular monitoring program to successfully and consistently operate a cyanide reduction process. These parameters are listed in Table 4. For continuous treatment systems, flow, pH, and oxidation reduction potential (ORP) are normally recorded on a continuous basis. The probes for these units should be calibrated weekly with daily calibration preferable. The cyanide in the process influent and the cyanide and free chlorine in each reactor vessel effluent should be measured daily using a composite sample for cyanide and a grab sample for chlorine. These measurements are required to verify adequate treatment and to establish a working relationship between free chlorine, ORP, and cyanide destruction. The effluent temperature and suspended solids should also be measured on a daily basis to provide an understanding of how these parameters affect efficiency of destruction.

In addition to the above standard, monthly or quarterly analyses of the treatment plant influent for interfering agents should be performed. These agents either cause an excessive use of chlorine or form cyanide complexes that cannot be oxidized by chlorine. These agents include cuprous, nickelous, ferrous, and ferric ions. The presence of cuprous ion in cyanide wastes produces an apparent interference to the destruction of cyanides. The cuprous ion exerts a chlorine demand of 0.56 lbs of available Cl_2 per lb of cuprous copper present. Therefore, at least

TABLE 4

CYANIDE REMOVAL
PROCESS MONITORING REQUIREMENTS

Parameter	Frequency	Comment
1. Reactor Temperature	Daily	To measure temperature.
2. Flow	Continuously	To determine HRT and to adjust chemical dosages.
3. Influent Cyanide Concentration	Daily	To determine destruction efficiency.
4. Effluent Cyanide Concentration	Daily	To measure any residual.
5. Effluent Cyanate Concentration	Daily	To determine loading to downstream processes.
6. Chlorine Concentration	Daily	To measure excess chlorine.
7. Reactor pH	Continuously	To control caustic addition.
8. Reactor ORP	Continuously	To control chlorine addition.
9. Effluent Suspended Solids Concentration	Daily	To determine loading to downstream processes.
10. Reactor Sludge Volume	Daily	To determine treatment chemical requirements and mixing effectiveness.

an additional 0.56 lbs of available Cl_2 has to be used in the oxidation of cyanides to account for this chlorine demand.

The above discussion of cuprous ions also holds true for nickelous ion which exerts 2.24 lbs of available chlorine demand per lb of nickelous ion. This 2.24 lbs/lb represents an excess of 3.7 times the theoretical amount required for the oxidation of nickelous ion to nickelic ion. This excess has been found experimentally to be necessary to eliminate the nickelous interference.

Ferrous and ferric ions present in wastewaters that contain cyanide can react with chlorine to form a complex that is only slightly oxidizable by cyanide.

Example Calculations

Hydraulic residence time (HRT) represents the average length of time wastewater spends in the chemical reaction tank assuming complete mixing of the reactor. Since the oxidation of cyanide is not an instantaneous reaction, it is essential that the wastewater remain in the reaction tank for at least the minimum recommended HRT.

The HRT calculation is:

$$HRT = \frac{VOL}{FLOW}$$

where:

VOL = the volume of liquid in the tank
FLOW = the flow to the reactor.

Note that VOL and FLOW must be expressed in similar units such as cubic meters or gallons. As an example, if a cyanide oxidation vessel had a volume of 6000 gallons and the flow to the tank was 8000 gallons/hour the calculation would be:

$$HRT = \frac{6000\ GAL}{8000\ GAL/HR} = 0.75\ HRS$$

Process Control Strategies

The principal operating strategies for process control of both one and two stage cyanide oxidation are pH, ORP (which controls the chlorine addition), mixing, and HRT. Of these variables the operator has ready control of pH and ORP. The HRT, while having a major impact on the process, is established by the wastewater flow rate and the reactor design, and therefore the operator has little control for continuous-flow systems. However, for batch systems the operator has control of the HRT.

For first stage oxidation, the ORP should be maintained between 350 and 400 mV[12] for a pH between 9.5 and 10. Typically, this will result in nearly complete oxidation of cyanide in 30 to 120 minutes.[13] In general, increasing ORP will decrease the required reaction time (HRT). Similarly, increasing pH to a value of 10 will decrease required reaction time (HRT). Above a pH of 10, no improvement in performance is achieved. Therefore, operating at a pH above 10 will only result in increased caustic consumption and a high strength wastewater that must be neutralized.

For two stage treatment the first stage is operated as described above. However, the second stage is typically operated at a pH between 8 and 8.5 and the ORP is maintained at approximately 600 mV. Increasing the ORP will decrease the reaction time (HRT) but unlike first stage oxidation as the pH is decreased reaction time (HRT) is also decreased. In practice, however, the pH is seldom allowed to decrease below 8.0 for two reasons. First, if incomplete oxidation of cyanides occurred in the first stage for any reason, extremely toxic hydrogen cyanide gas could be released when the pH is dropped to 7 or below. Secondly, if the pH were to drop to 5 or below, nitrogen trichloride, an explosive compound, could be produced.

In addition to the above parameters several other items should be checked by the operator on a routine basis. These include reactor mixing, reactor bottom for solids deposition, the reactor effluent for

suspended solids, solids production, temperature, and the condition of chemical feed equipment.

Mixing is important for four major reasons. Firstly, good mixing is essential to assure good contact between cyanide and the oxidizing agent, chlorine. Secondly, good mixing is required to minimize short circuiting which can cause the actual HRT to be much shorter than the calculated HRT. Thirdly, if inadequate mixing is present in the first stage oxidation, cyanide precipitates which resist oxidation can form. Lastly, inadequate mixing can result in solids settling out in the reaction vessel, thereby reducing its effective volume and HRT.

To assure good mixing the operator should periodically inspect the basin. The operator should also check influent and effluent structures for integrity. The influent and effluent structures should be located at opposite ends of the reaction vessel. Circular tanks should also be equipped with mixing baffles along the side walls. The operator either should occasionally drain the tank or rod the side walls to make sure solids are not being deposited in the tank. The operator also should inspect the mixer. The impeller should be checked for proper submergence and wear. The mixer should also be checked for proper horsepower (see Table 5) especially if poor mixing occurs and no other cause can be found.

The reactor water temperature also should be periodically checked. While wastewater temperature cannot usually be controlled it can affect reaction rates and general performance of the system. By monitoring temperature, variations in performance can sometimes be understood. Similarly, suspended solids concentrations should be monitored. A significant increase in solids across a first stage reactor can indicate inadequate mixing and can result in cyanides being carried through as precipitates.

TABLE 5

HORSEPOWER REQUIREMENTS FOR MEDIUM AGITATION

(Source: Shinskey, F. G.: pH and pIon Control in Process and Waste Streams, John Wiley and Sons, Inc., New York, NY 1973, p. 161).

Vessel Volume (gal)	Horsepower	Hp/1000 gal
100	0.27	2.7
1000	2.3	2.3
10,000	12	1.2
100,000	80	0.8

TYPICAL PERFORMANCE VALUES

The oxidation of cyanide by chlorine can achieve efficiencies of 99% or greater with respect to cyanides not complexed with iron (ferrous and ferric ions), giving effluent cyanide concentrations for cyanide not complexed with iron typically ranging from non-detectable to 10 ppb. For total cyanide, the concentrations typically run from non-detectable to 100 ppb.

TROUBLESHOOTING GUIDE

A troubleshooting guide for operation of the cyanide oxidation process is presented in Table 6. The operating problem areas are threefold -- high cyanide in effluents, high cyanates in effluents, and solids accumulation in the reactors. The high cyanide-cyanates problems usually involve chemical phenomena or equalization; the problem of solids accumulation is primarily physical in nature and is resolved by adequate reactor mixing.

TABLE 6
CYANIDE OXIDATION TROUBLESHOOTING GUIDE

PROBABLE CAUSE	CHECK OR MONITOR	REASON	CORRECTIVE ACTION
OPERATING PROBLEM 1: High cyanide in the effluent.			
1a. Improper or fluctuating reactor pH.	- See "pH Control Troubleshooting Guide."	- Cyanide oxidation is pH sensitive. pH levels less than 9 dramatically reduce the reaction rate.	- See "pH Control Troubleshooting Guide."
1b. Inadequate equalization.	- See "Equalization Troubleshooting Guide."	- Flow surges can cause erratic performance of pH control equipment and wash the cyanide through the treatment process before it has had time to react.	- See "Equalization Troubleshooting Guide."
1c. Improper or fluctuating ORP.	- Check ORP set point. - Check calibration and condition of ORP probe. - Check chemical feed equipment for proper operation.	- Low chlorine dosages can prevent the destruction of cyanides (ORP should be between +350 to + 400 mV in first stage destruction).	- Clean, calibrate, and adjust chlorine addition equipment and ORP controller as required.
1d. Inadequate mixing.	- Check condition of mixer impeller. - Check all mixing baffles including influent, effluent, and sidewall baffles on circular tanks. - Check motor RPM and horsepower. (See Table 5).	- Inadequate mixing can result in formation of solids containing cyanide which resist cyanide destruction. It can also result in reactor short circuiting, poor pH control, and poor contact between chlorine and cyanides.	- Repair and adjust as required.
1e. Inadequate residence time.	- Check reaction vessel for solids accumulation. - Monitor reactor flow and calculate HRT.	- Accumulation of solids in the reaction vessel and excessive flow can reduce hydraulic residence time, thus leaving inadequate time for the reaction to occur.	- Clean reactor. - Reduce flow.

TABLE 6
(Continued)
CYANIDE OXIDATION TROUBLESHOOTING GUIDE

PROBABLE CAUSE	CHECK OR MONITOR	REASON	CORRECTIVE ACTION
1f. Significant quantities of ferrous or ferric ions present.	- Monitor wastewater for presence of iron ions.	- Iron cyanide complexes are formed in presence of ferrous and cyanide ions. They are very stable and resistant to most treatment techniques.	- Identify source of ferrous and ferric ion and eliminate .
OPERATING PROBLEM 2: High cyanates in the effluent.			
2a. Improper or fluctuating reactor pH.	- See "pH Control Troubleshooting Guide."	- Cyanate oxidation is pH sensitive. pH levels betweem 8.0 and 8.5 should be maintained.	- See "pH Control Troubleshooting Guide."
2b. Inadequate equalization.	- See "Equalization Troubleshooting Guide."	- Flow surges can cause erratic performance of pH control equipment and wash the cyanate through the treatment process before it has had time to react.	- See "Equalization Troubleshooting Guide."
2c. Improper or fluctuating ORP.	- Check ORP set point. - Check calibration and condition of ORP probe. - Check chemical feed equipment for proper operation.	- Low chlorine dosages can prevent the destruction of cyanides (ORP should be around +600 mV for second stage cyanide destruction).	- Clean, calibrate, and adjust chlorine addition equipment and ORP controller as required.
2d. Inadequate mixing.	- Check condition of mixer impeller. - Check all mixing baffles including influent, effluent, and sidewall baffles on circular tanks. - Check motor RPM and horsepower. (See Table 5)	- Inadequate mixing can result in reactor short circuiting, poor pH control, and poor contact between chlorine and cyanates.	- Repair and adjust as required.

TABLE 6
(Continued)
CYANIDE OXIDATION TROUBLESHOOTING GUIDE

PROBABLE CAUSE	CHECK OR MONITOR	REASON	CORRECTIVE ACTION
2e. Inadequate residence time.	- Check reaction vessel for solids accumulation. - Monitor reactor flow and calculate HRT.	- Accumulation of solids in the reaction vessel and excessive flow can reduce hydraulic residence time, thus inadequate time for the reaction to occur.	- Clean reactor; reduce flow.
OPERATING PROBLEM 3: Solids accumulate in reactors.			
3a. Inadequate mixing.	- Check condition of mixers, mixer horsepower, RPM of mixers if variable speed mixers are used and condition of side wall baffles if circular tanks are used.	- Inadequate mixing can result in the formation of precipitatants that contain cyanides. Precipitated cyanides resist oxidation.	- Repair and replace equipment as required.
3b. Grit or metal filings present in wastewater.	- Inspect solids in tanks to determine their nature.	- Gritty solids such as metal filings cannot be kept in suspension unless very high mixing horsepower is provided.	- Install grit chamber or similar grit collection system upstream of the process.

SECTION 7

CHROMIUM REDUCTION

INTRODUCTION

Chromium is used in the metal finishing industry as a corrosion inhibitor either in the chromate form, CrO_4^{-2} ion, or as the dichromate form, $Cr_2O_7^{-2}$ ion. As either ion, chromium exists with a valence of +6 (hexavalent). At this valence chromium is both toxic and soluble. Reduction of chromium from the +6 valence state to the +3 valence state and subsequent precipitation of the trivalent chromium is the most common method of chromium removal from wastewater. Other methods include ion exchange and carbon adsorption.

THEORY OF OPERATION

Reduction is a chemical reaction in which one or more electrons are transferred to the chemical being reduced (e.g., +6 chromium) from the chemical initiating the transfer (i.e., reducing agent). There are several reducing agents that can be used to supply electrons to the hexavalent chromium to reduce it to trivalent chromium. These reagents include metallic iron, ferrous sulfate, sulfur dioxide, and various forms of sulfites such as sodium sulfite, sodium bisulfite, and sodium metabisulfite. The chemical reactions for chromium reduction by the most commonly used reagents are shown below.

Sulfur Dioxide:

$$Na_2Cr_2O_7 + 3SO_2 + H_2SO_4 \longrightarrow Cr_2(SO_4)_3 + Na_2SO_4 + H_2O$$

Sodium Sulfite:

$$Na_2Cr_2O_7 + 3Na_2SO_3 + 4H_2SO_4 \longrightarrow Cr_2(SO_4)_3 + 4Na_2SO_4 + 4H_2O$$

Sodium Bisulfite:

$$Na_2Cr_2O_7 + 3NaHSO_3 + 2.5\ H_2SO_4 \longrightarrow Cr_2(SO_4)_3 + 4H_2O + 2.5\ Na_2SO_4$$

Sodium Metabisulfite

$$Na_2Cr_2O_7 + 1.5\ Na_2S_2O_5 + 2.5\ H_2SO_4 \longrightarrow Cr_2(SO_4)_3 + 2.5H_2O + 2.5\ Na_2SO_4$$

The choice of reducing agent depends on the overall process options and localized cost conditions. Sodium metabisulfite offers stability and dry chemical feed capabilities as advantages over the use of bisulfite. A disadvantage of using sulfur dioxide is the potentially hazardous situation that exists when sulfur dioxide is stored and handled. Advantages of sulfur dioxide include ease of automatic control and its lower chemical cost. Ferrous sulfate reduction has been reported to have the advantage of effectiveness which is independent of pH. However, it has also been pointed out that ferrous sulfate produces four times the quantities of sludge produced through the use of sulfur dioxide or bisulfite.

DESCRIPTION OF EQUIPMENT

Chromium reduction can be achieved in either the batch or continuous-flow mode. Both modes require a reaction vessel, mixer, pH controller, ORP controller, and chemical addition equipment (See Figure 8). Batch systems are usually limited to small flows and are operated manually by employees who monitor the pH and ORP and add chemicals as required. The advantages of batch treatment are that the level of hexavalent chromium discharge and complexity of automation are both low. Continuous-flow systems, however, must have automated chemical feed systems that are capable of maintaining proper pH and ORP. The advantage of continuous-flow treatment is that the manpower needs are low.

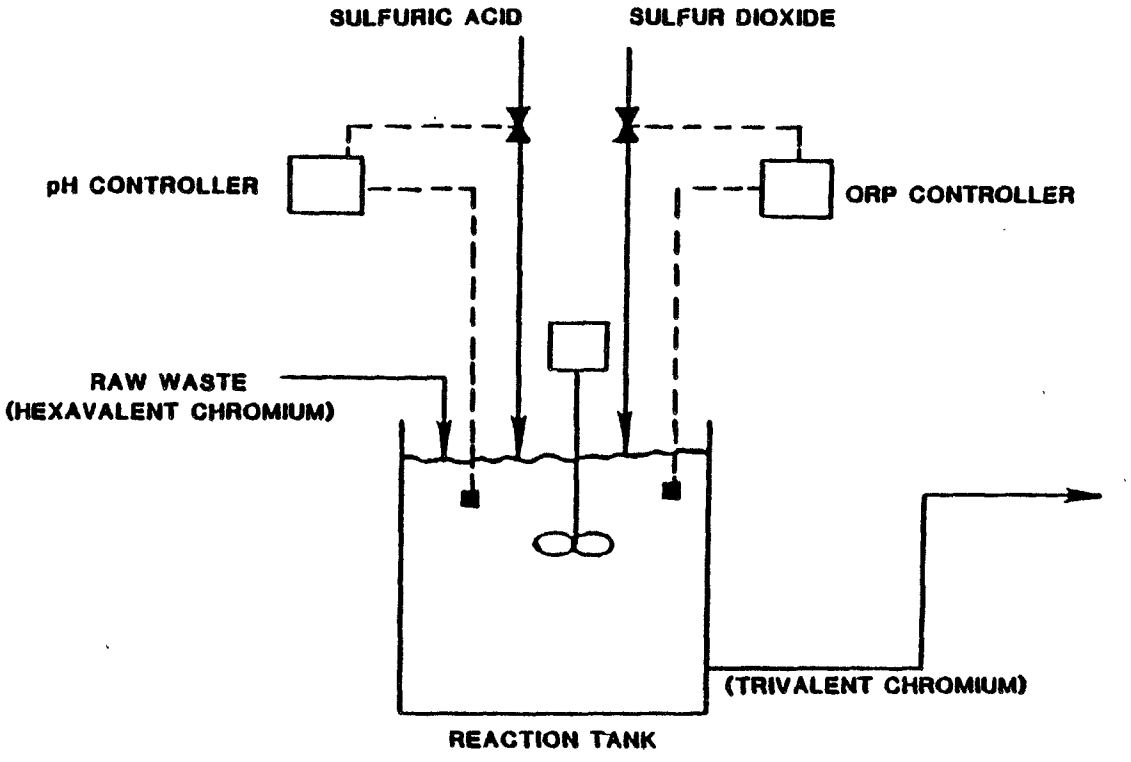

Figure 8. **Hexavalent chromium reduction with sulfur dioxide.**

OPERATIONAL PROCEDURE

The objective of chromium reduction is to convert hexavalent chromium to trivalent chromium. This procedure is crucial because hexavalent chromium is highly toxic to aquatic organisms and is a known carcinogen. It is also very soluble in water in its hexavalent state and is very difficult to remove without first converting it to the trivalent state. Trivalent chromium is less toxic than hexavalent chromium and can be removed readily from wastewater by standard chemical precipitation between pH levels of 7 and 9.

To control the operation of hexavalent chromium reduction processes, the operator should conduct the necessary process monitoring, perform any control calculations needed, and understand the process control strategies or variables.

Process Monitoring

The major parameter used to assess the efficiency of chromium reduction processes is the concentration of hexavalent chromium (chromium +6). The main performance parameters used to monitor the operation of the chromium (+6) reduction process are the flow and the concentration of hexavalent chromium in the reactor effluent. While these parameters provide the overall performance, many other parameters must be measured and incorporated into a regular monitoring program to successfully and consistently operate a chromium reduction process. The parameters which should be monitored for chromium reduction are listed in Table 7.

For continuous-flow treatment, flow, pH, temperature, and ORP are normally recorded whenever the process is in operation. Effluent trivalent chromium and hexavalent chromium concentrations are typically measured using 24 hr composite samples. The remaining analyses should be performed on a regular but less frequent basis, typically weekly.

TABLE 7

CHROMIUM REDUCTION
PROCESS MONITORING REQUIREMENTS

Parameter	Frequency	Comment
1. Reactor Temperature	Continuously	To understand changes in reaction rate for $Cr^{(+6)}$ to Cr^{+3}.
2. Flow	Continuously	To determine HRT and to adjust chemical dosages.
3. Influent Hexavalent Chromium	Weekly	To determine removal efficiency.
4. Effluent Hexavalent Chromium	Daily	To determine any residual Cr^{+6}.
5. Effluent Trivalent Chromium	Daily	To determine loading to downstream treatment.
6. Reactor pH	Continuously	To control acid addition.
7. Reactor ORP	Continuously	To control sulfite addition.

Example Calculations

Several example calculations are provided below for calculating operating parameters essential to operation of a chromium reduction process.

Hydraulic Residence Time (HRT) is the average length of time wastewater spends in the chemical reaction tank. Since the reduction of chromium is not an instantaneous reaction, it is essential that the wastewater spend a minimum time in the reaction tank. The HRT calculation is:

$$HRT = \frac{VOL}{FLOW}$$

where

VOL = the volume of liquid in the tank and

FLOW = the flow to the reactor.

Note that VOL and FLOW must be expressed in similar units such as cubic meters or gallons. As an example if a chromium reduction tank had a volume of 5000 gallons and the flow to the tank was 2500 gallons/hour the calculation would be:

$$HRT = \frac{5000 \text{ gal}}{2500 \frac{\text{gal}}{\text{hr}}} = 2 \text{ hr}$$

Process Control Strategies

The primary operating strategies which control the performance of a chromium reduction process are the reducing agent used, the reactor HRT, and the reactor pH and ORP. The selection of reducing agent is typically made during the design of the facility, and the HRT is a function of the reaction volume and wastewater flow, both of which are usually beyond the control of the operator. This leaves pH and ORP as the primary process control variables over which the operator has control.

Operator control of the chromium reduction process is usually exercised by first adjusting the pH of the reactor based on the HRT. The relationship between the reactor HRT and the required pH for chromium reduction using sulfur dioxide is given in Figure 9. It is important to understand the significance of Figure 9. From Figure 9 it can be seen that for a 20-minute retention time, a pH of 3.0 or less is required to achieve complete reduction of chromium. If the retention time of the system were to decrease from 20 minutes to 10 minutes because of an increase in the flowrate, complete reduction of chromium could still be achieved by decreasing the operating pH from 3.0 to 2.5 or less. However, if the pH remained at 3.0, incomplete chromium reduction would occur. From Figure 9 it can be observed that if the retention time is 50 minutes, a pH of 4.0 or less is sufficient.

The remaining primary control parameter is ORP. ORP is a measure of the preponderance of easily oxidizable or reduceable substances in a wastewater sample. The importance to the operator is knowing whether there is large quantity of reducing substances that may have an immediate and very high demand for oxygen. Sulfide and sulfite are examples of such substances. This measurement, although not specific, is instantaneous.[14] The oxidation-reduction potential is measured in a galvanic cell consisting of a reference electrode (e.g., calomel) and an indicating electrode of a highly noble metal (e.g., platinum or gold). The calomel electrode is the cathode and the inert platinum or gold electrode is the anode. The anode is made of a highly noble metal so that the potential for its oxidation is less than that of any oxidizable solution components. The anode thus is a site of the oxidation of solution constituents but ideally is not affected itself.

Oxidation-reduction potential measurements in natural waters and wastewaters are difficult to interpret. The only potentials that will register in the ORP cell are those from species that can react at the indicator electrode surface - these are called electroactive species. In natural waters only a few reactions proceed at the electrode surface.

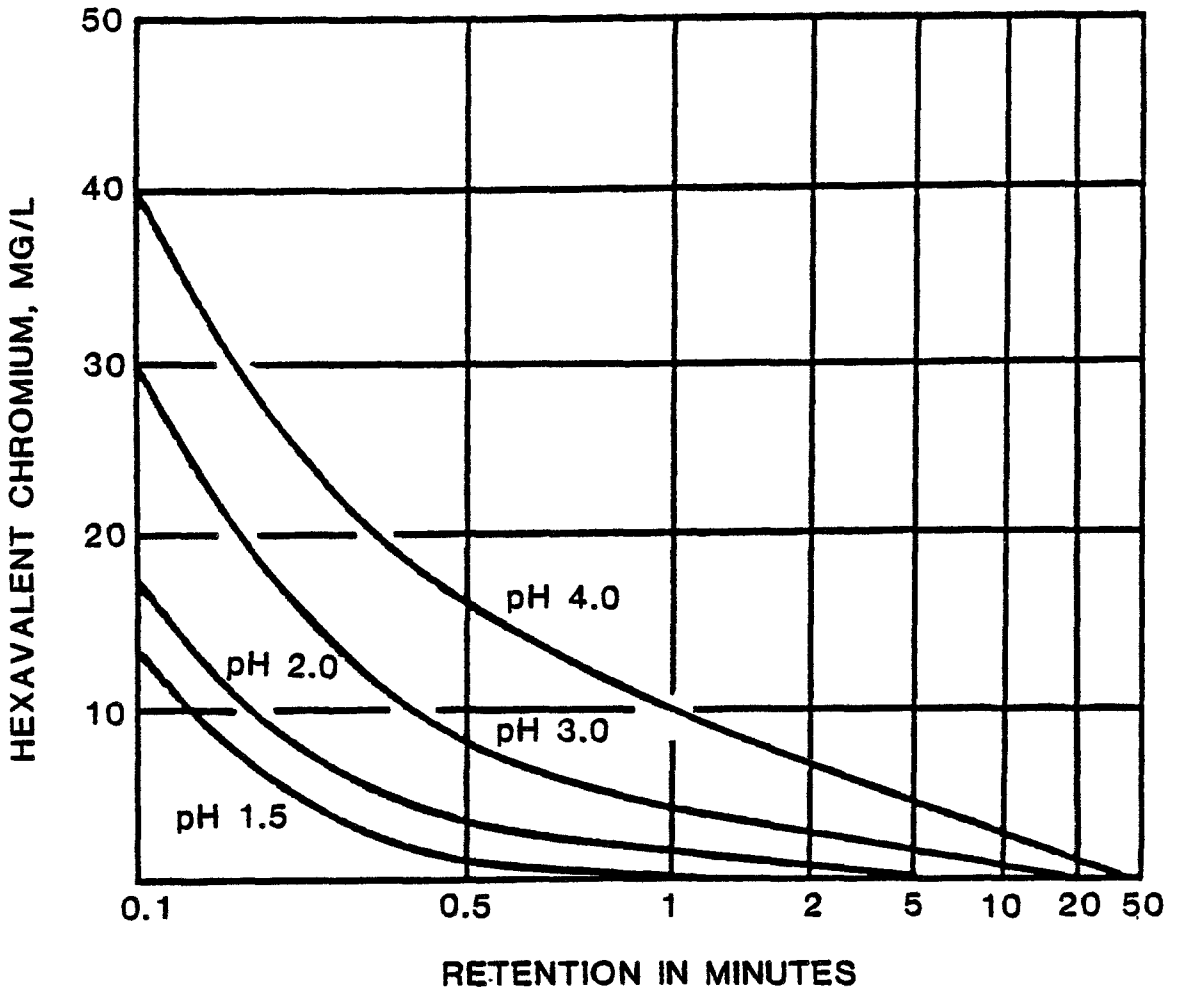

Figure 9. **Relationship between hexavalent chromium, pH, and retention time for sulfur dioxide.**

SOURCE: PATTERSON, J.W., TECHNOLOGY AND ECONOMICS OF INDUSTRIAL POLLUTION ABATEMENT, IIEQ NO. 76/22, ILLINOIS INST. FOR ENV. QUAL., 1976.

All the important redox reactions involved in the nitrogen cycle, the sulfur cycle, and the carbon cycle are not completed at the indicator electrode in an ORP cell. At best, too, the voltage reading produced by an ORP cell is a reflection of many reactions - it is a "mixed potential" and its value is difficult if not impossible to interpret in any fundamental chemical terms. Moreover, when an ORP electrode combination is immersed in a water the voltage reading will vary with time, usually falling from the initial reading obtained. This behavior is due to the general process of polarization and of "poisoning" of the indicator electrode surface by the accumulation of oxidation products on the surface of the electrode.[15]

Despite all of these limitations ORP measurements have been used widely in metal finishing treatment systems where, if they are treated as indices or "black box measurements" rather than fundamental indicators of a specific chemical environment, they can be of qualitative use.[15]

The ORP of a chromium reduction reactor is controlled by the amount of reducing agent added. The ORP set point for the chromium reduction is somewhat dependent upon the pH and the ions present in solution. An ORP value of +300 mv at a pH of 2.3 will normally be satisfactory for chromium (+6) reduction. The relationship between pH and ORP for sodium bisulfite is presented in Figure 10. If inadequate chromium reduction occurs under these circumstances the operator should try decreasing the pH and/or increasing the ORP operating level.

Several other factors affect the operation of the chromium reduction process to a lesser extent and should be checked any time poor performance or excessive chemical use is encountered. Among these factors are mixing, temperature, and mass loading. Rapid and good mixing of the wastewater, acid, and reducing agent is important to ensure efficient use of chemicals. Overfeeding of chemicals is usually required if mixing is inadequate. Furthermore, solids can settle out in the reaction tank if mixing is inadequate, a situation which reduces the

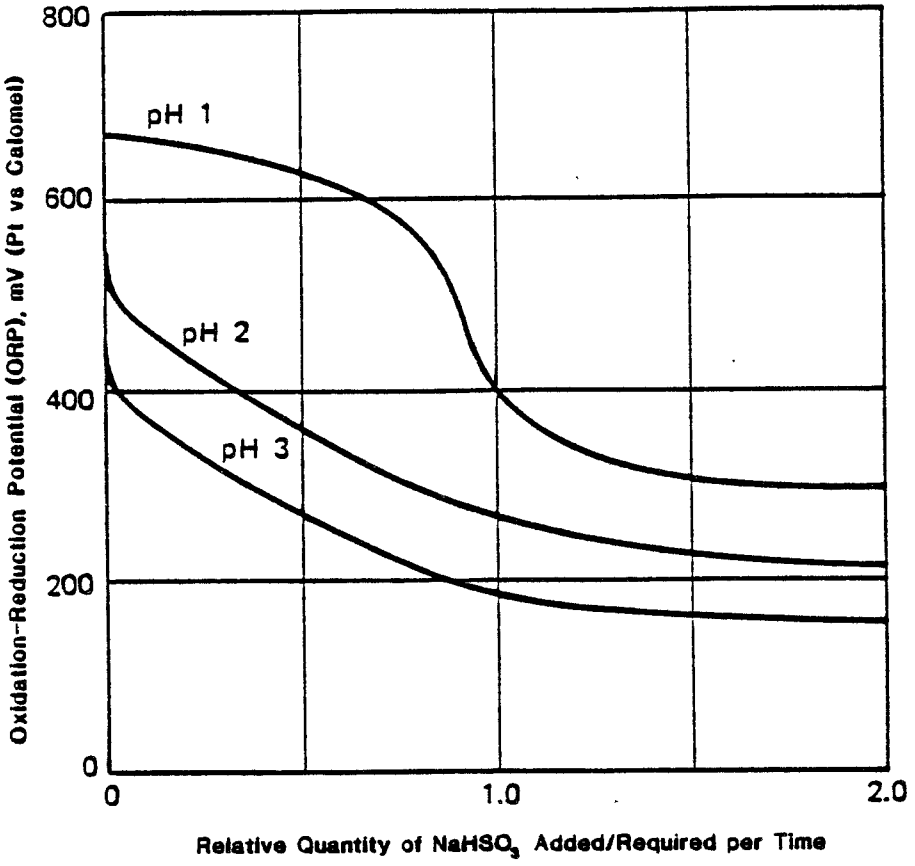

Figure 10. **Relationship between ORP, sodium bisulfite required, and pH.**

SOURCE: SHINSKY, F.G.; pH AND pION CONTROL IN PROCESS AND WASTE STREAMS, JOHN WILEY AND SONS, INC., NEW YORK, NY., 1973. p. 118.

effective volume of the tank which in turn reduces the HRT. When the HRT is decreased, lower operating pH levels and hence increased chemical usage are required.

To ensure that good mixing is maintained several items must be checked periodically by the operator. Among the items are the following:

- Check mixer impeller for wear and proper location with respect to the drive shaft and the tank.
- Check baffles for wear and proper placement. All circular tanks should have baffles along the outer vertical wall and most other tank walls should have some form of influent or effluent baffle to prevent short circuiting.
- Check tank bottom to determine if solids are accumulating. This is usually accomplished either by draining the tank or by rodding the sides to determine water depth versus tank depth.
- Check mixer horsepower. Typical mixer horsepower ratings are given in Table 5.

The effect of temperature on the performance of chromium reduction sometimes can be very significant. Temperature primarily affects reaction rates and, to a lesser extent, mixing. The operator has little control over temperature, but periodically monitoring the temperature may enhance understanding of slightly poorer performance during periods of cold weather. If large temperature swings occur it may be necessary to decrease reactor pH or increase ORP levels. It also should be noted that temperature changes can have dramatic effects on instrument calibration. Any time significant temperature changes occur, pH and ORP meters should be recalibrated.

Significant increases in the mass loading of chromium to a treatment process can result in temporary upsets and increased chemical usage. Hexavalent chromium loading in the reactor effluent also directly relates to the plant discharge of chromium which often is expressed

as a mass per time (i.e., lb/day or kg/day). For these reasons the influent and effluent loadings should be calculated periodically to gain insight into process performance.

TYPICAL PERFORMANCE VALUES

Hexavalent chromium concentrations in the effluent from chromium reduction processes range from 0.009 to 0.045 mg/L. Most values, however, are less than 0.02 mg/L in a well-operated system.

TROUBLESHOOTING GUIDE

A troubleshooting guide for the chromium reduction process is presented in Table 8. The major operational problem in chromium reduction processes is incomplete reduction of hexavalent chromium which results in a significant concentration of Cr^{+6} in the reactor effluent. The causes of incomplete reduction may be physical (short-circuiting, sampling and analysis errors, etc.) or chemical (incorrect pH, ORP, etc.).

TABLE 8
CHROMIUM REDUCTION TROUBLESHOOTING GUIDE

PROBABLE CAUSE	CHECK OR MONITOR	REASON	CORRECTIVE ACTION
OPERATING PROBLEM 1: Cr^{+6} concentration too high.			
1a. Sampling or analytical error.	- Check collection procedure with operator and check with lab to ensure proper reporting of results.	- Error could be with data.	- Recalculate new concentration and make sure hexavalent chromium is to be measured, not total chromium.
1b. Retention time too short to complete Cr^{+6} destruction.	- Calculate retention time versus time shown in retention time/pH graph (see Figure 9).	- Retention time may be insufficient for complete chromium destruction.	- Increase retention time by decreasing the flowrate; or decrease pH.
1c. Shortcircuiting in reaction vessel.	- Inspect mixing regime of tank. Look for dead spots, sludge accumulation, and inlet and outlet shortcircuiting.	- Shortcircuiting will decrease the effective retention time.	- Shortcircuiting may be reduced by installing baffles, increasing pumping action of mixer, or installing inlet and outlet baffles.
1d. Improper pH.	- Check desired pH setting of meter versus retention time.	- Setpoint pH may be too high for given retention.	- Select lower setpoint pH.
	- Check calibration of pH meter.	- Meter may be out of calibration.	- Recalibrate.
	- Check operation of acid addition equipment (pumps, valves, and storage tank).	- Correct as necessary. - Failure to achieve desired pH could be caused by insufficient acid, inoperable pumps or valves, or malfunction in control system.	

TABLE 8
(Continued)
CHROMIUM REDUCTION TROUBLESHOOTING GUIDE

PROBABLE CAUSE	CHECK OR MONITOR	REASON	CORRECTIVE ACTION
1e. Improper ORP.	- Check desired ORP setting.	- Settings range from +200 mV to +400 mV with an average of +300 mV.	- Establish new setpoint ORP.
	- Check calibration of ORP meter.	- Meter reading may not represent actual ORP reading.	- Recalibrate meter.
	- Check location of probe.	- If probe is not located at effluent, then probe is not reading effluent ORP.	- Locate probe at effluent.
	- Check operation of chemical addition system.	- Failure to achieve desired ORP could be caused by insufficient chemical supply, inoperable pumps or valves, or malfunction in control system.	- Correct as necessary.
1f. Hydraulic surges to reaction vessel.	- Monitor flow rate over time and check plant production personnel.	- Evaluate whether flow rates reduce retention time such that complete chromium reduction is not accomplished.	- Equalize flow by decreasing rate of chromium waste discharge from process tanks.

SECTION 8

pH CONTROL

INTRODUCTION

Control of pH is a fundamental process for virtually every metal finishing wastewater treatment system. It is the crux of wastewater metal precipitation that pH be maintained within a narrow range to achieve optimum metal removal. Close pH control is required also for chromium reduction, cyanide oxidation, and possibly for emulsion breaking of oils. Furthermore, it may be required to post-neutralize the treated wastewater to assure that the discharge is within regulatory limits. Because of the number of treatment processes that require pH adjustment, a metal finishing wastewater treatment system may contain several pH control steps, and may include pH control within selected plant processing units.

THEORY OF OPERATION

The parameter pH is a measure of the hydrogen ion (H^+) concentration in a water or wastewater solution. It is calculated as the negative logarithm (base 10) of the hydrogen ion concentration, which means that for each drop in pH of one unit a tenfold increase in the H^+ ion concentration takes place. This means that when the hydrogen ion concentration increases, the pH decreases and the water becomes more "acidic." Likewise, when the hydrogen ion concentration decreases, the pH increases and the waste becomes more "basic" or "alkaline." When the pH is 7 the waste is neither acidic or basic and is considered neutral.

The adjustment of pH requires that, to lower the pH of the wastewater, some chemicals which release H^+ ions must be dissolved in the water. The most common chemicals used in waste treatment are sulfuric acid (H_2SO_4), hydrochloric acid (HCl), and nitric acid (HNO_3). Similarly, to raise the pH, some chemical that reacts with the H^+ ion from solution must be added. The most common chemicals for raising pH are caustic (NaOH), lime (CaOH), and soda ash (Na_2CO_3). The lime and caustic work by releasing a hydroxide ion (OH^-) which reacts with an H^+ ion to form water, H_2O. The soda ash works by reacting with one H^+ ion to form the bicarbonate ion (HCO_3^-) or with two H^+ ions to form $H_2O + CO_2$.

Whenever pH levels are changed, the concept of buffering must be discussed. Buffering is the resistance of a solution to pH changes. This resistance is typically low at pH levels close to 7 and very high for pH levels less than 4 or greater than 10. The resistance, however, is very dependent on the chemicals present in the wastewater.

The best way to determine buffering is with a titration curve. A titration curve is generated by taking a sample of wastewater and gradually adding the acid or base and recording the pH after a small amount of the reagent is added and well mixed. An example titration curve is plotted in Figure 11. It is constructed by plotting the volume of pH-adjusting chemical added versus the pH of the waste sample after mixing with the adjusting chemical. In the example displayed in Figure 11, it can be seen that the first 40 ml of the caustic (NaOH) solution raised the pH from approximately 1 to 2. The next 20 ml of the caustic solution, however, raised the pH to approximately 11.5. In terms of buffering the first segment of the curve is referred to as highly buffered. A large quantity of caustic solution was required to make a small change in pH. The second segment is referred to as poorly buffered. Only a small addition of caustic solution was required to make a large change in pH.

The practical effects of buffering on pH adjustment will be discussed in later sections of this chapter, but from this example it is

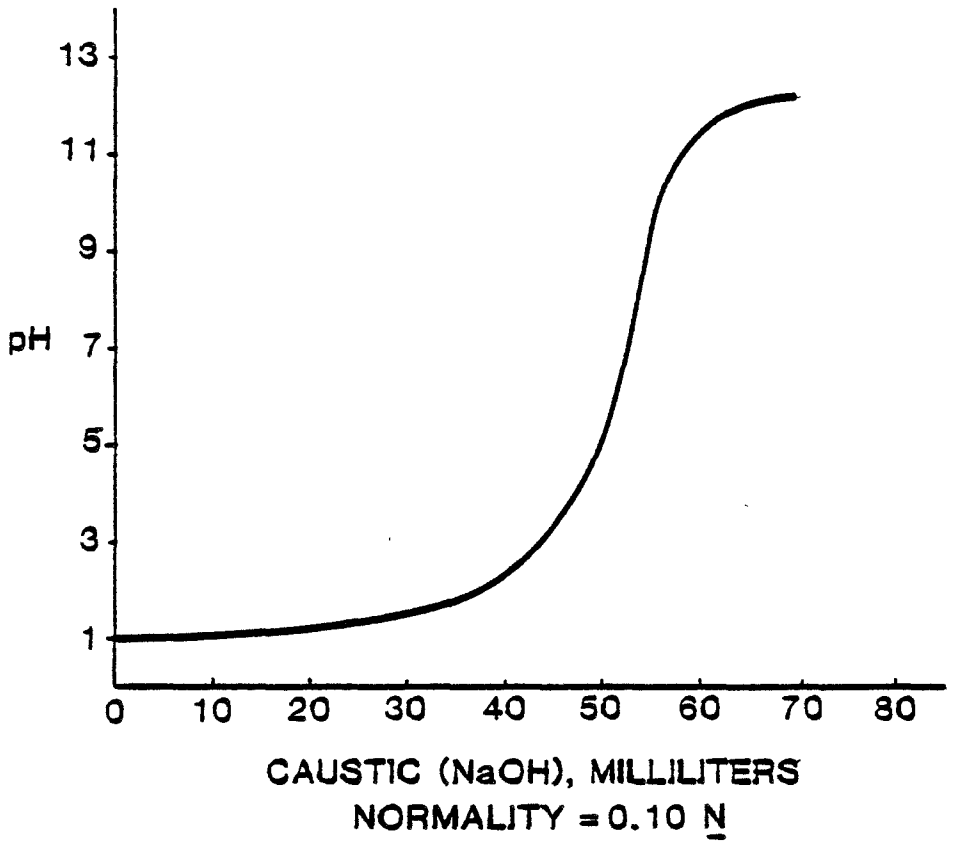

Figure 11. **A sample titration curve.**

easy to see that a pH of 2 could easily be maintained. A pH of 7, however, is difficult to maintain because a very small addition of caustic solution can make a very significant change in pH.

DESCRIPTION OF EQUIPMENT

The pH adjustment process typically consists of a reaction tank, mixer, pH control system, and reagent feed system. The pH adjustment process may either be a batch or a continuous flow system. In a batch system, wastewater is added to the reaction tank; then chemical reagents are added to adjust the pH; and finally the solution is discharged to the subsequent treatment units. Control of the steps in the batch pH adjustment process can either be automatic or manual.

In continuous flow systems, wastewater is continuously entering the reaction vessel. The flowrate can either be constant, if equalization is provided, or variable. Often pH adjustment is accomplished in more than one reaction vessel. This is especially true when the set point is located on a poorly buffered segment of the titration curve. The first tank will adjust the pH close to the set point using a relatively large chemical feed system. The second tank will then use a small metering pump to fine tune and adjust the pH to the set point level. Alternately, a single tank can be used in conjunction with a low and high rate chemical feed system. When the deviation between the set point and the actual pH is large, the high rate system is used. When the difference is small, the low rate system is used to fine tune the adjustment. This system is primarily used for batch operations.

Automatic control of chemical reagent addition is mandatory for continuous systems. There are various methods for providing control of the pH adjustment process. These methods include feedback, feedforward, and feedforward-feedback control techniques and several types of control signal generators. The method best suited for a particular application is dependent upon characteristics of the waste, hydraulic retention time of the reaction vessel, mixing, reaction lags, and other factors.

The common pH control techniques employed today are the feedback, feedforward, and feedforward-feedback control concepts. Feedback control bases the chemical feed rate on the difference or error between the set point pH and the measured pH. Thus, a feedback system solves the pH control problem by trial and error. An example of a feedback control system is shown in Figure 12. The major advantage of this system is that, because it operates by trial and error, the system does not need to know the flow and pH of the influent. It is also relatively insensitive to changes in the titration curve. A disadvantage to feedback control is its susceptibility to oscillatory response, which results from an inherent time lag in the response. This time lag is referred to as "dead" time and is the time required to deliver the chemicals to the wastewater, mix the chemical with the wastewater, and for the appropriate chemical reactions to occur. This time lag means that after a controller initiates a control action, it does not see the results of that action until the "dead" time has elapsed. If the control action were excessive because of poor buffering, a rapid change in flowrate, or excessive "dead" time, the set point can be overshoot before the controller realizes it. It can then overreact to the overshoot and the pH can begin to oscillate around the set point. This oscillation can result in unacceptable performance and/or excessive chemical use.

A feedforward control system does not experience the oscillation problem associated with feedback control. A feedforward system operates by measuring the flow and pH of the wastewater before it reaches the pH adjustment tank. It takes this information and computes the necessary chemical addition based on titration information that has been programmed into the controller. A schematic of a feedforward system is shown in Figure 13. The primary advantage of the system is that it is not susceptible to the problems encountered by feedback control. The system, however, is dependent upon having the ability to predict the buffering of the incoming wastewater. This means that the system can only be used on wastewater streams which have buffering capacity and titration curves that do not vary with time. This is usually a severe restraint when controlling pH. The system is also susceptible to gradual drifts in effluent pH because of cumulative controller error

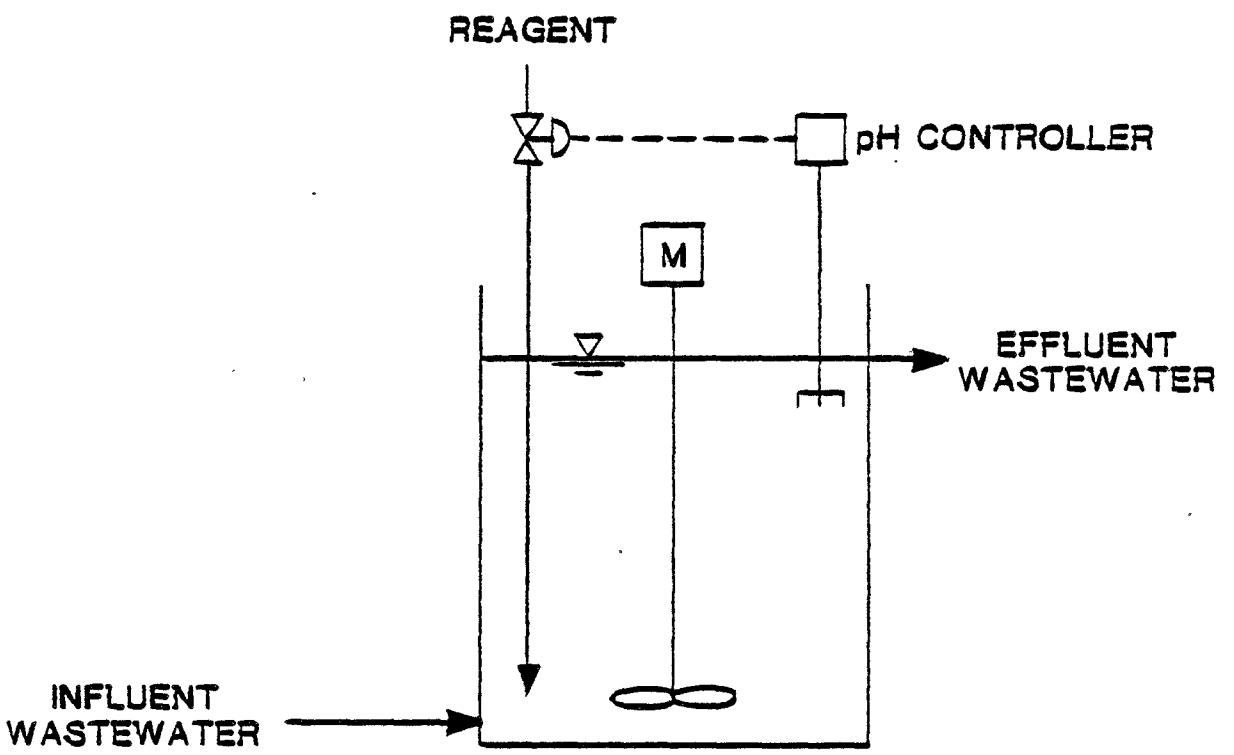

Figure 12. **Feedback mode of pH control.**

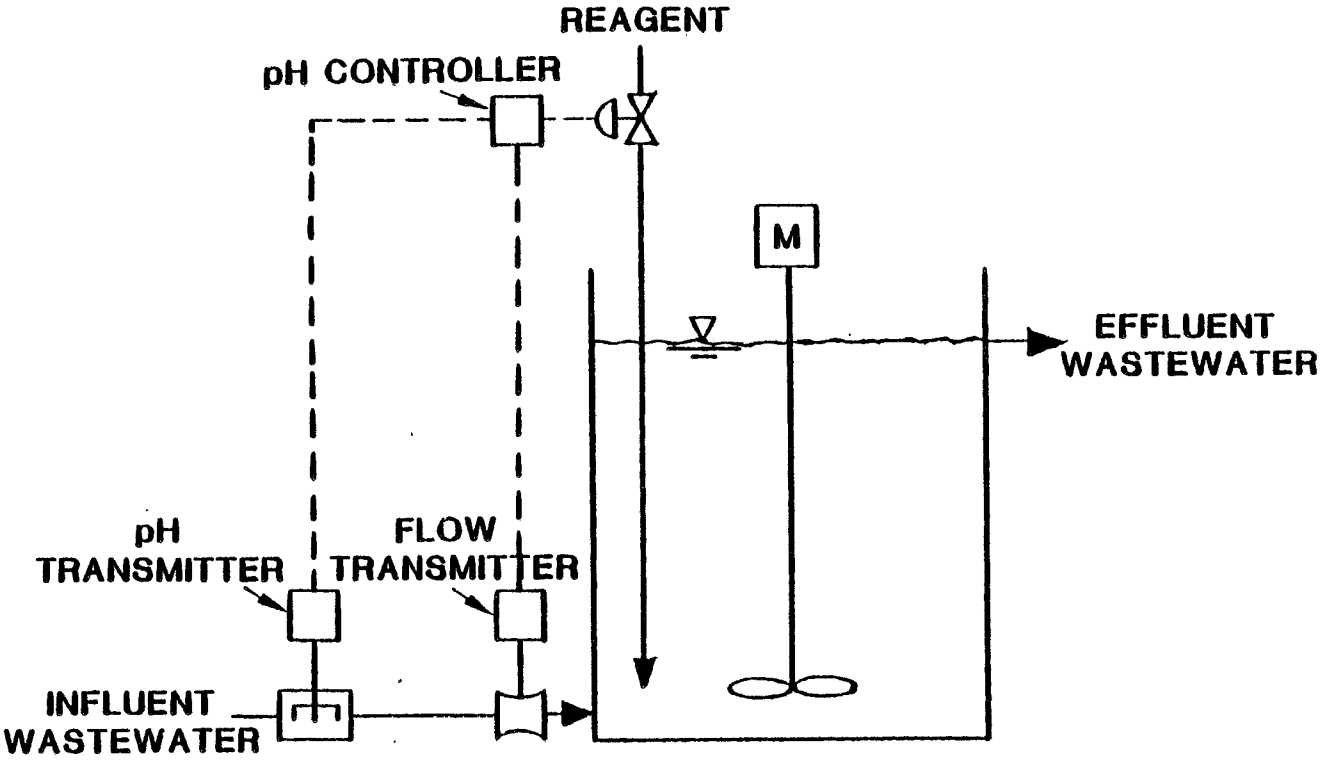

Figure 13. **Feedforward mode of pH control.**

which the controller has no way of detecting because it does not sense the pH of the wastewater after adjustment.

The most common utilization of feedforward control is in conjuction with feedback control. This is referred to as feedback-feedforward control. This configuration is shown in Figure 14. The intent is that the feedforward counteracts most of the problems caused by rapid changes in buffering and flowrate and the feedback provides residual control and setpoint tracking. The advantage of this configuration over feedforward control is better pH control for variable strength and buffering of the influent waste. The above control systems can incorporate several different types of control signal generators that are responsible for directly controlling chemical addition equipment. These include on-off signal controllers, proportional signal controllers, integral signal controllers, differential signal controllers, and programmed signal controllers. These controllers can be used individually or, as is more often the case, in combination. A brief desciption of the controllers and their applicability is provided below.

On-off Controllers

On-off controllers simply generate control signals that turn chemical feed equipment on and off based upon the reactor pH. This type of controller is typically slow and unable to achieve fine pH control. Use of on-off controllers is normally confined to batch operation where speed is not critical, and to multiple stage continuous systems where on-off control is used in the first stage which is designed for gross pH adjustment, not set point tracking.

Proportional Controllers

Proportional controllers generate control signals proportional to the difference between the set point pH and the actual pH (error). This means that as the error grows the chemical addition increases to compensate. This technique is quick and effective for linear regions of a titration curve. However, it does have one drawback in continuous flow

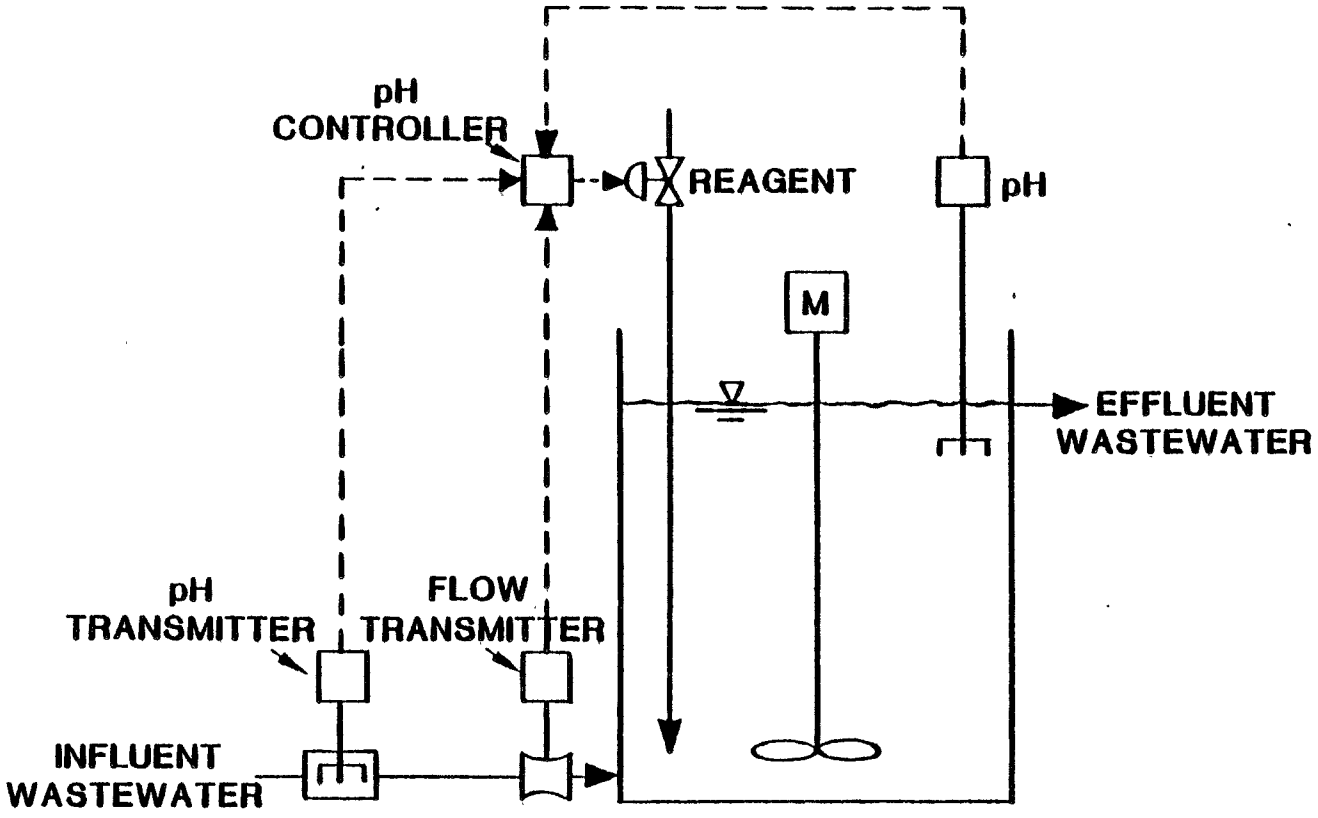

Figure 14. **Feedback-feedforward mode of pH control.**

systems; namely, the controller is continuously approaching the desired pH but does not reach it before some of the wastewater flows through the reactor. The reactor pH is always different from the desired pH. This fact means that the set point pH will have to be offset to compensate for this difference. The offset will vary with chemical demand and should be set based on average wastewater conditions. The offset can only be set by trial and error. This system is very suitable for batch operations which do not experience the offset problem and for continuous flow systems with a relatively consistent wastewater which will allow establishment of an effective offset.

Integral Controllers

Integral control signal generators (reset controllers) are used in conjunction with proportional controllers to eliminate the offset problem. This is accomplished by generating a control signal that is proportional to the time since the pH was last at the set point. This signal is added to the proportional error signal. As the proportional signal drifts away from the set point for the reasons described in the previous discussion, the integrator generates a progressively larger control signal until the pH is forced back to the set point. Once the set point is reached, the integral signal drops back to zero and the whole process begins again. This type of controller is useful when close pH control is required and where the waste flow is not consistent either in volume or buffering capacities. Integral control is never used in conjunction with batch operations.

Derivative Controllers

Derivative control signal generators are used primarily when the pH must pass through a region of low buffer intensity as indicated in a titration curve by a line segment with a very large slope. The derivative controller generates a signal proportional to the rate of change of pH with respect to time. As an example, if the pH is constant the proportional signal is zero. If the pH is rapidly diverging from the set point, a large control signal is generated to correct the pH. If

the pH is rapidly approaching the set point, a large negative control signal is generated to slow the approach to the set point. Once generated, the derivative signal is added to the error signal and the integral signal (if present).

The derivative control technique is often used in conjunction with proportional control for batch neutralization when the set point is in a poorly buffered location on the titration curve. It is also used in conjunction with proportional and integral control (a PID device) for continuous flow systems when the pH must pass through a poorly buffered range on the titration curve. Care must be exercised when using derivative control for continuous systems. If the derivative control is made too sensitive, the system may oscillate between high and low pH because of the lag or dead time in the system.

Programmable Controllers

Programmable controllers are sophisticated controllers that generate control signals based on a logic sequence that is programmed into the controller. For example, the controller can check the reactor pH and choose an appropriate proportional gain depending upon whether the system is operating in a high or low buffer region. Similarly, an integral and proportional response rate could be selected also. There is virtually no limit to the complexity and diversity of control strategies that can be built into these systems. Therefore, it is necessary that the process design manual and manufacturer's literature be referenced to understand individual programmable controllers.

OPERATIONAL PROCEDURES

The operational objective of pH adjustment is to control the addition of acidic and basic chemicals to the wastewater such that a desired pH can be achieved and maintained in the wastewater. This objective should be accomplished with the use of minimal amounts of chemicals in an effort to keep costs down and effluent total dissolved solids from

becoming too high. The latter is especially true when several pH adjustment steps are performed on the wastewater prior to discharge.

Process Monitoring

Process monitoring of the pH adjustment process should consist of continuously monitoring and recording effluent pH from the pH control process. This information is essential to assure that the pH is being maintained within the critical limits required for metal precipitation, cyanide oxidation, chromium reduction, or other pH-sensitive treatment processes. Flow and influent pH must also be measured on a continuous basis for feedforward control, and as frequently as practical for feedback control where such information can be used to understand deviations in the effluent pH. Additionally, reactor temperature should be measured periodically or when poor pH adjustment occurs. Temperature can change the speed at which pH adjustment chemicals react and can affect the calibration of pH monitoring equipment. All pH probes should be calibrated daily with fresh buffer solutions and flow meters monthly. Calibration of pH meters involves the use of standards of at least two pH values; standards of pH 4.0, 7.0, and 10.0 are recommended.

In addition to the standard tests just described, titration curves should be prepared for the influent wastewater for each pH adjustment process. These curves should be prepared from both composite and grab samples using the same chemicals that will be used in the actual pH adjustment. The frequency for preparing these curves will vary greatly from one pH adjustment process to another depending primarily on the variability of the waste. As a minimum, a sufficient number of titration curves should be prepared to define the normal characteristics of the wastewater and then at least on a quarterly basis to assure that the wastewater is not gradually changing its characteristics. Whenever poor pH adjustment or process changes occur, new titration curves should be prepared and compared to the historical titration curves. If the curves differ significantly, the upset was probably caused by the non-characteristic waste. If the change represents a permanent change in the

characteristics of the wastewater, the pH controllers will probably need readjustment.

Process Control Strategies

The four primary operating variables which enable the operator to control the pH adjustment process are pH controller adjustments, treatment chemicals, equalization, and mixing.

pH Controller Adjustments--

As previously discussed, pH controllers use a variety of control strategies to generate control signals. The common adjustments that can be made to the controllers will be described below. The applicable manufacturer's literature and any available design manuals should be referenced for specific systems when available. This is particularly important when manufacturers use terminology different from that used in this manual. It should be stated also that the adjustment procedures presented here are simplified. Whenever possible, fully-trained control and instrumentation personnel should be used to perform comprehensive adjustment procedures.

On-Off Control--On-off control has two primary adjustments; they are the set points for turning chemical feed equipment on and off. These set points should bracket the desired pH such that when the pH starts to move away from the desired pH the chemical feed pumps are turned on. Then, when the pH passes the desired pH in the reverse direction, they are turned off. The set points, of course, have to be selected such that the pH is maintained within acceptable limits. They also must be adjusted such that the set point for turning the equipment off is not too close to the set point for turning the equipment on. If the two set points are too close, the equipment will cycle on and off at an excessive rate. This can cause mechanical equipment to wear and sometimes can cause electrical equipment to overheat. The set point for turning on the equipment is usually controlled by adjusting the "set point" setting while the set point for turning off the equipment is

controlled by the "dead band" setting. The "dead band" setting can be preset by the manufacturer (internal) or can be field adjusted (external).

Proportional Control--The primary control adjustments on a proportional controller are the set point and the gain adjustment. The gain adjustment determines the magnitude of the control signal relative to the pH error (actual minus set point pH). That is, as the gain is increased the magnitude of the control signal relative to the error is increased. The gain should typically be set as high as possible without sending the system into oscillation. Oscillation can occur when the gain is too high and either flow, pH, or buffering capacity of the wastestream changes. The controller detects the change and responds with a corrective signal. The effects of the corrective signal are not sensed by the controller, however, for a period equivalent to the system dead time. Hence, the system can over-respond when the gain is too high and can cause the pH to pass the set point in the other direction. This condition is not in itself bad, unless the pH enters an unacceptable range or continues oscillating for an extended period of time. If either condition occurs, the gain should be decreased. If natural oscillations are not present at the time of adjustment, they can be generated by adding directly a small quantity of base to a pH reduction unit or acid to a unit designed to increase pH. The acid or base should be added such that it does not cause more than a 1 or 2 pH unit change in the process effluent. It should be noted that some manufacturers use a "proportional band" control instead of a gain control. This control functions identically to a gain control except in reverse. Increasing the proportional band decreases the gain.

The set point for proportional only controllers may have to be set at a pH value slightly different from the desired pH value. This is for the reason discussed under "Description of Equipment". The offset will be strictly a matter of trial and error. Typically as the gain is increased the offset can be decreased. Likewise, as buffering intensity

increases the offset must be increased. In highly variable flow systems, there may be no need for an offset because of the frequent swings in pH which will negate the advantage of an offset.

Proportional Plus Integral Control (PI Control)--The function of the integral mode is to eliminate the need for proportional offset. If too much integral action is used, the result will be an oscillation of the measurement as the controller drives the valve from one extreme to the other. If too little integral action is used, the measurement will return to the set point too slowly. The integral action adjustment controls how rapidly the integral control signal changes as a function of time. Among the various controllers manufactured, the integral action adjustment is calibrated in one of two ways--either in minutes per repeat, or the number of repeats per minute. For controllers measuring integral action in minutes per repeat, the smaller the integral number, the greater the action of the integral mode. On controllers that measure integral action in repeats per minute, the adjustment indicates how many repeats of the proportional action are generated by the integral mode in one minute. Thus, for these controllers, the higher the integral number, the greater the integral action. The proper amount of integral action depends upon the system dead time. The longer the system dead time, the less the integral action must be.

A simple way of adjusting the integral action is to set it to its minimum action position and adjust the proportional gain to its optimum position as described in the previous section. Then the system is allowed to come to steady state. Achievement of steady state may require some waiting if proper equalization is not practiced upstream and the system continuously fluctuates about the set point. When steady state is reached, a very slow pattern of pH gradually increasing to the set point and then moving away in the same direction should be evident. The integral action adjustment should then be increased gradually. The pattern should occur at an increasing rate with the pH deviations from the set point becoming less and less. If too much integral action is applied, the pH will start fluctuating significantly to both sides of the set point. It must be remembered when performing the adjustment

that if the integral adjustment is in minutes per repeat, the integral action increases with decreased settings on the adjustment. Conversely, for adjustments marked in repeats per minute, the larger the setting, the larger the integral action.

The above procedure is usually satisfactory for field adjustments when the manufacturer's recommended procedures are not available or when qualified instrumentation and control personnel are not present. When the manufacturer's procedures or qualified personnel are available, they should be utilized.

Proportional-Integral-Derivative (PID Control)--The derivative mode opposes the rapid changes in pH that often occur when the pH adjustment procedure enters a poorly buffered section of a titration curve. The derivative response adjustment is measured typically in minutes. The higher the reading on the adjustment control, the more derivative action present. Too much derivative action causes excessive response of the controller and cycling in the measurement. Too little derivative action has no significant effect. As with the integral control, the system dead time is fundamental with respect to the maximum allowable derivative response. If the derivative response exceeds the system dead time, the system will become unstable and will oscillate.

A field method for adjusting the gain when manufacturer's recommended procedures or qualified instrumentation personnel are not available is provided below:

1. Set the integral to maximum time (minimum integral action).
2. Set the derivative to minimum time (minimum derivative action).
3. Adjust the gain to an optimum setting as before, except that a slight cycle should remain in the measurement.
4. Increase the derivative time until the cycle stops.
5. Increase the gain until the cycle starts again.
6. Repeat Steps 4 and 5 until further increases in the derivative time fail to stop the cycle.
7. Decrease the gain to stop the cycle.

8. Set the integral time equal to derivative time. NOTE: If the integral time is expressed as beats per minute, the time integral control should be set to (1/derivative setting).

pH Adjustment Chemicals--

The operator often has some control over the chemicals used for pH adjustment. Factors which should be considered in selecting a suitable chemical for a wastewater pH adjustment process include speed of reaction, buffering qualities, product solubility, reagent cost, and availability. A discussion of some common neutralizing agents follows.

Lime Materials--Lime is a term used to designate calcined or burned limestone (quicklime or CaO) and its hydrated derivative [hydrated lime or $Ca(OH)_2$]. The two basic types of limestone used are high calcium and dolomitic. High calcium limestones consist chiefly of calcium carbonate with a small amount of magnesium carbonate. Dolomitic limestones contain nearly equal molar quantities of calcium and magnesium carbonate. Typical impurities present in the limestone in amounts of less than five percent include silica, iron, and alumina.

The reactivity of limestones differs with physical characteristics (e.g., size and shape) and chemical composition. As a rule, high calcium limestones are more reactive than dolomitic limestones; however, pronnounced physical characteristics may produce exceptions to the rule. Theoretically, dolomitic limestone has greater basicity, but actual or available basicity depends upon the conditions of application. Pulverized limestone is a stable noncorrosive product that is amenable to dry feeding. It is available in bulk or in 36-kg (80-lb) bags. Various mechanical conveyors are suitable for unloading the bulk material.

Quicklime - Quicklime has an affinity for carbon dioxide and water. Under normal handling or storage conditions, quicklime will air-slake, that is, absorb moisture and carbon dioxide from the atmosphere, causing physical swelling and a marked loss of chemical activity. Consequently, quicklime must be stored in moisture-proof areas that are

free from carbon dioxide. Because of this potential loss of effectiveness, quicklime is usually consumed within a few weeks after manufacture.

Quicklime is available in various forms, ranging from 20-cm (8-in) lumps to pulverized, and is supplied in bulk or in 36-kg (80-lb) bags. Dust from pulverized quicklime can irritate eyes and skin. Although it can be fed dry, for optimal efficiency it is slaked (hydrated) and slurried before use under conditions that will yield maximal reactivity. Improper slaking will adversely affect reactivity. Slaking usually is carried out at temperatures of 82° to 99° C (180° to 210°F). The slaking reaction may reach completion in 10 minutes with highly reactive limes or in more than 30 minutes for limes of lower reactivity.

Following slaking, the lime putty usually is slurried with water to a concentration of 10 to 35 percent (based on dry solids) for feeding purposes. Because the slurry is subject to deterioration from carbonation during storage, it is customary to use it soon after it is made.

The applicability of lime to specific situations may be expected to vary significantly from supplier to supplier. Testing under actual or simulated process conditions is the only sound basis for determination of relative applicability; empirical basicity tests normally are of value only when the application is analagous to the test.

Hydrated Lime--Hydrated lime is suitable for dry feeding or for slurrying. Dust from hydrated lime, a fine powder, can cause eye and skin irritation. The storage characteristics of dry hydrated lime are superior to quicklime, but, as with any strong alkali, carbonation can cause deterioration. Hydrated lime is supplied in bulk or in 23-kg (50-lb) bags. Bulk unloading is usually accomplished by pneumatic conveyor.

Sodium Hydroxide--Sodium hydroxide (caustic soda) is a highly reactive alkali that is marketed in solid or solution form. The solution form is the most convenient for handling because burn hazards to

personnel are minimized. The solid form is hygroscopic, and both the solid and the solution are subject to deterioration from carbonation during prolonged storage. Solid and liquid sodium hydroxide are supplied in drums, but only the liquid form is available in bulk (tank car or truck). Heated tanks should be used for storage of 50-percent solution in situations where the ambient temperature is likely to fall below 12°C (54°F).

Sulfuric Acid--Sulfuric acid is a highly reactive acid that is supplied in liquid form, usually in concentrations of 98 percent. The concentrated acid is strongly hygroscopic and presents a burn hazard to personnel. Dilute solutions are highly corrosive to iron and steel, whereas concentrated solutions (>93 percent) are not corrosive to iron and steel. A maximum freezing point of 8°C (46°F) is exhibited at a concentration of 85 percent. Depending on the concentration, freezing protection may be required during storage and transport. Sulfuric acid is shipped in carboys, barrels, tank cars, or trucks.

Equalization--

Equalization is essential to successful pH adjustment particularly when the set point pH is in a poorly buffered region of the titration curve. The importance of equalization can best be understood by examining the "dead" time concept. If the pH, flow, or buffer capacity of the wastewater stream changes significantly in a time frame shorter than the dead time of the control system, proper pH control cannot be achieved. Similarly, as the rate of change approaches the dead time pH control becomes more difficult and more sophisticated controllers that incorporate integral and derivative action are required.

Whenever poor pH control occurs, the operator should conduct a monitoring program immediately to determine the variability of the influent to the pH adjustment step and to determine if the poor performance coincides with the variability in the influent. If it does, the operator should troubleshoot the equalization process. As a general rule, increased equalization makes pH control easier.

Mixing--

Adequate mixing is essential for good pH adjustment for three closely related reasons. First, mixing is required to blend pH adjustment chemicals with the wastewater. Second, mixing decreases reactor dead time by dispersing the chemicals rapidly throughout the reactor. Lastly, it provides equalization and homogeneity throughout the reactor. The latter is important because the feedback pH control probe will respond to the non-homogeneous contents of the reactor just as readily as to fluctuations in the influent characteristics.

To acheive good mixing, the minimum horsepower requirements presented in Table 5 should be provided for mixing. The influent and effluent devices should also be located at opposite sides of the reaction tank, ideally with one at the top of the tank and one at the bottom. If circular tanks are used, side wall mixing baffles must be provided. The tank must also be checked periodically for solids deposition in the bottom of the tank which can adversely affect mixing and decrease the hydraulic residence time of the system. Similarly, the mixer impeller should be checked for wear or breakage.

Proper location of the chemical feed and the feedback pH probe is also essential and should be verified by the operator. The chemicals either should be added directly at the point of inflow to the system or directly into the mixing vortex. Care should be exercised in the latter case to assure that the chemicals will not corrode the impeller or impeller shaft. The pH probe for feedback control should be located in the outflow of the reactor <u>just</u> outside the reactor. This provides the most representative sample for process control.

Influent and pH-adjusting reagent should enter at the same point, premixed for best results. The direction of inflow should oppose the direction of agitation for most effective backmixing.[16]

The exit should be diametrically opposite to the point of entry, to minimize short-circuiting. Otherwise a significant part of the influent

could pass by the vessel without treatment, and uncontrollable variations in effluent quality could result. If the influent enters at the bottom on one side, effluent should leave at the top from the other side, and vice versa.[16]

In neutralization of industrial wastes, many streams with widely differing properties are usually combined for treatment in a single vessel. Often both acid and basic reagents are required when the influent pH may be on either side of 7. In these instances, reagent can be saved by providing a retention vessel upstream of the neutralization tank. This smoothing vessel should have enough residence time to accommodate the largest expected transient influent variations.[16]

Properly locating the point of measurement is as important as locating the vessel exit, and is, in fact, tied to it. A representative measurement of effluent quality is essential and so electrodes should be placed in the effluent stream. However, they should not be placed out of the mixed zone. Dynamic response is also important, so every effort should be made to maintain a reasonable flow past the electrodes. One tries to avoid the use of stilling wells or other protective devices which restrict flow, and to avoid locations where flow is variable.[16]

Submersible electrode assemblies will always be more responsive than flow-through assemblies since they are directly inserted within the process stream. Flow-through assemblies were designed for pressurized service with a sample withdrawn continuously for measurement. Although desirable for easy maintenance, the additional delay caused by the sample line impedes control action.[16]

Submersible electrodes are used primarily in open vessels. They should extend only slightly below the surface of the liquid to minimize the possibility of leakage. Occasionally, however, deeper submergence is necessary. The assemblies may be air-purged to protect against leakage even under severe conditions.[16]

Flow-through electrode assemblies are required for pressurized service, or whenever a sample must be treated prior to measurement. Sample lines should be as short as practical and velocity high to minimize dead time. High velocity also helps keep the electrodes clean, although excessive velocity can cause erosion and even cleavage of the electrodes. A velocity of 2 ft/sec past the electrodes is probably as high as tolerable for long life.[16]

TYPICAL PERFORMANCE VALUES

With adequate equalization, the proper selection of control strategies, and the proper adjustment of all control equipment, the wastewater exiting a pH adjustment step should be controllable within $\pm$ 0.25 pH units.

TROUBLESHOOTING GUIDE

A guide for troubleshooting the pH adjustment process is presented in Table 9. The pH parameter is one of the first indicators of potential treatment plant upset conditions. Problem areas include, in addition to shock loads, pH instability related to controller settings or breakdown, chemical feed and mixing equipment failure, and chemical system used.

TABLE 9
pH ADJUSTMENT TROUBLESHOOTING GUIDE

PROBABLE CAUSE	CHECK OR MONITOR	REASON	CORRECTIVE ACTION
OPERATING PROBLEM 1: Oscillating or unstable pH. Previous performance satisfactory.			
1a. Shock loading of flow or pH.	- Check influent flow and pH for abnormal levels or fluctuations.	- pH controllers are optimized for specific flow, pH, and buffer intensity conditions. Changes in these parameters can cause controller instability.	- Prevent influent pH and flow in variations either through increased equalization or changes in operating procedures. Tune controller to make it less sensitive to fluctuations.
1b. Buffer intensity of wastewater changed.	- Prepare new titration curve and compare to previous curves. Check to see if chemical feed system at maximum capacity.	- Decreases in buffer intensity can cause controllers to oscillate. Large increases in buffer intensity may cause chemical demand to exceed the chemical feed system capacity.	- Increase equalization; readjust controller to reflect new conditions; modify chemical addition equipment if its capacity is exceeded. If buffer intensity decreased, consider using chemical that provides buffering such as soda ash.
1c. pH probe failure.	- Check condition of probe and all electrical connections. Clean and calibrate probe. Check condition of electrolyte fluid in probe if probe uses it.	- Dirty probes respond slowly and irregularly. Routine maintenance of probes is essential.	- Clean, calibrate, repair, and adjust as required.
1d. Poor mixing.	- Check mixer, mixer impeller, all baffles, and the tank for solids deposition.	- Poor mixing can cause short circuiting and poor chemical dispersion.	- Repair as required. Clean tank.
1e. Chemical feed equipment failure.	- Check feed equipment for smooth operation, leaks, and any blockage in the chemical delivery path. Check calibration of all chemical metering systems.	- If the pH adjustment chemical is not properly delivered to the reactor, no pH adjustment can occur.	- Repair and adjust as required.

TABLE 9
(Continued)
pH ADJUSTMENT TROUBLESHOOTING GUIDE

PROBABLE CAUSE	CHECK OR MONITOR	REASON	CORRECTIVE ACTION
1f. Defective chemicals.	- Check chemical feed containers for chemical content, chemical strength, and formation of solid lumps when dry chemicals are used.	- Improper or defective chemicals can adversely affect pH adjustment. Improper chemical concentration can be placed in feed tanks by accident or ignorance.	- Replace defective chemicals.
1g. Controller breakdown.	- Check all other possible causes.	- Controllers can break down, especially from lightning or other electrical surges.	- Call qualified repairman.
OPERATING PROBLEMS 2: Slow controller response.			
2a. Improper setting on proportional gain control.	- Check gain setting and date of last adjustment.	- Low gain will cause sluggish response.	- Adjust controller proportional gain.
2b. Dirty pH probe.	- Check condition of probe.	- Dirty probes will respond slowly, particularly if oily material present in wastewater.	- Clean probe.
2c. Excessive "dead" time.	- Check mixing; check feedback probe location and type.	- Increasing mixing will decrease dead time. Probe should be located in reactor outflow just outside of reactor. Probes that insert directly into outflow are quickest.	- Increase mixing; move probe; use probe that is inserted directly into outflow.
2d. Slow reacting chemical.	- Check type and form of chemicals. Lime reacts slowly.	- Liquids react faster than solids or slurries.	- Change chemicals.
OPERATING PROBLEM 3: pH offset.			
3a. Controller is proportional only and the pH set point has not been offset.	- Check type and set point of controller.	- Proportional only controllers require that the set point pH be slightly offset from desired pH.	- Adjust by trial and error.

TABLE 9
(Continued)
pH ADJUSTMENT TROUBLESHOOTING GUIDE

PROBABLE CAUSE	CHECK OR MONITOR	REASON	CORRECTIVE ACTION
3b. Controller is proportional-integral type and integral action setting is too low.	- Check type and integral control setting.	- Integral control does away with the offset requirement of proportional controllers if adjusted properly.	- Adjust as required.
3c. Chemical feed system inadequate.	- Check chemical feed system for proper operation and delivery rate.	- Chemical feed system may be unable to deliver chemicals at a sufficient rate to adjust pH.	- Modify feed system; use more concentrated chemicals; decrease wastewater flow.
OPERATING PROBLEM 4: pH oscillates around set point.			
4a. Improper controller adjustment.	- Check type controller and date of last adjustment.	- Improper adjustment of proportional, integral, or derivative control can cause oscillation.	- Adjust as required.
4b. System "dead" time too long.	- Check mixing, type of chemicals used, and location of feedback control.	- Excessive dead time limits a controller's ability to respond to pH changes. If rapid changes occur, the system will oscillate about set point.	- Improve mixing; use liquid chemicals that react quicker; place pH probe directly in outflow just outside of tank. Use proportional-integral-derivative controller; use chemicals with inherent buffering capacty such as soda ash.

SECTION 9

METAL PRECIPITATION

INTRODUCTION

Precipitation is a treatment technique which is commonly used to remove the following metals from wastewater: cadmium, trivalent chromium, copper, lead, nickel, and zinc. Precipitation is the process of adjusting the pH of a wastewater to the minimum solubility of the metal or metals. The insoluble metal precipitate which is formed can then be easily removed from the wastewater by sedimentation and/or filtration. Soluble metals are very stable in solution and will not settle out even at long detention times.

THEORY OF OPERATION

Precipitation of metals from solution involves adjusting the pH to the point of minimum solubility. An example of the solubility of a metal (lead) versus the pH of the wastewater is presented by the curve in Figure 15. The optimum treatment for a wastewater with characteristics shown in Figure 15 would be to adjust the pH of the wastewater to 9.0 and then separate the insoluble precipitate from solution by clarification or filtration. Removing 100 percent of the insoluble precipitate or floc would result in an effluent lead concentration of 0.20 mg/L. If the pH of the wastewater were adjusted to 7.5, then the effluent lead concentration would be 0.8 mg/L for 100 percent removal of the insoluble precipitate.

Heavy metals can exist in either the particulate form or the soluble or dissolved form. The particulate metal concentration represents

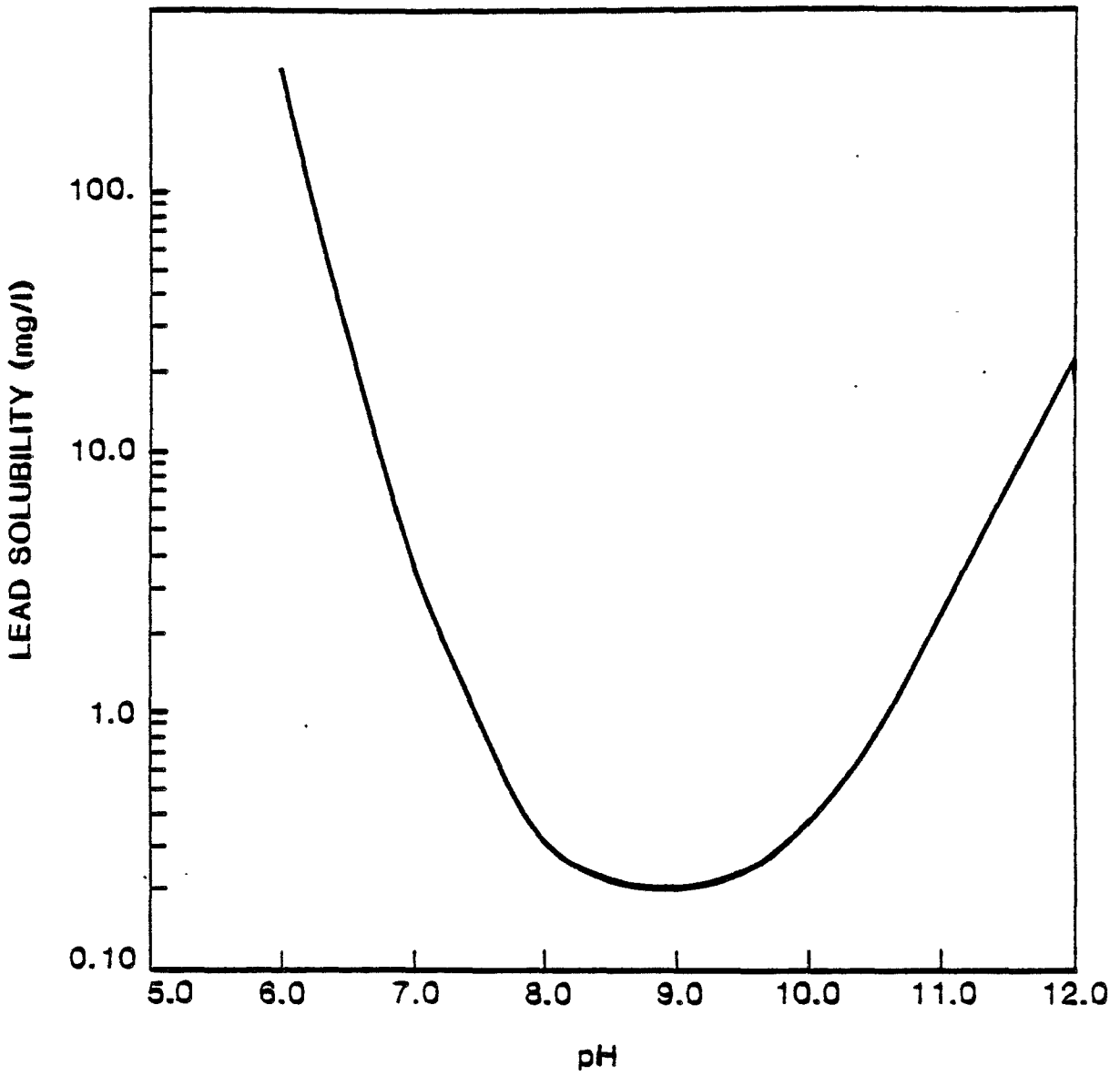

Figure 15. **Lead solubility for a typical wastewater.**

the difference between the total metal concentration and the soluble metal concentration. At each pH value, the soluble metal concentration can be determined theoretically from pH solubility diagrams or experimentally by analyzing for the dissolved metal concentration. The dissolved metal concentration of a solution can be measured by filtering the sample with a 0.45 micron filter and then analyzing the filtrate for the metal concentration. Analyses of aqueous solutions for metal concentration is performed using an atomic absorption spectrophotometer (AAS), an instrument which measures the radiant energy absorbed as the sample passes through a flame. Procedures for the analysis of most common metals by AAS are contained in reference 8.

The soluble metal concentration of a sample should not be based on theoretical considerations because of the effect that other ions have on the solubility of a metal. An example of the effect that carbonate has on lead solubility can be observed in Figure 16. This figure shows that the lead solubility at a pH of 9.0 for carbonate concentrations of 16, 50, and 10,000 mg/L as $CaCO_3$ is 0.07, 0.35 and 2.5 mg/L, respectively. Other metals can be similarly affected by ions in solution. Because of this effect, the optimum pH value should be based on test data rather than theoretical values.

DESCRIPTION OF EQUIPMENT

The processes generally used in metal precipitation include pH adjustment, sedimentation, and sometimes filtration. The functions of pH adjustment and sedimentation processes must not be confused. The pH adjustment step simply converts a metal from the soluble (ionic) form to the insoluble (hydroxide precipitated) form. However, the total concentration of the metal in the wastestream does not change during this process. The sedimentation process removes particulate metal from the wastestream. However, the sedimentation process does not decrease the soluble metal concentration.

The relationship between soluble and total metal concentration and the treatment processes involved is presented in Figure 17. Reading

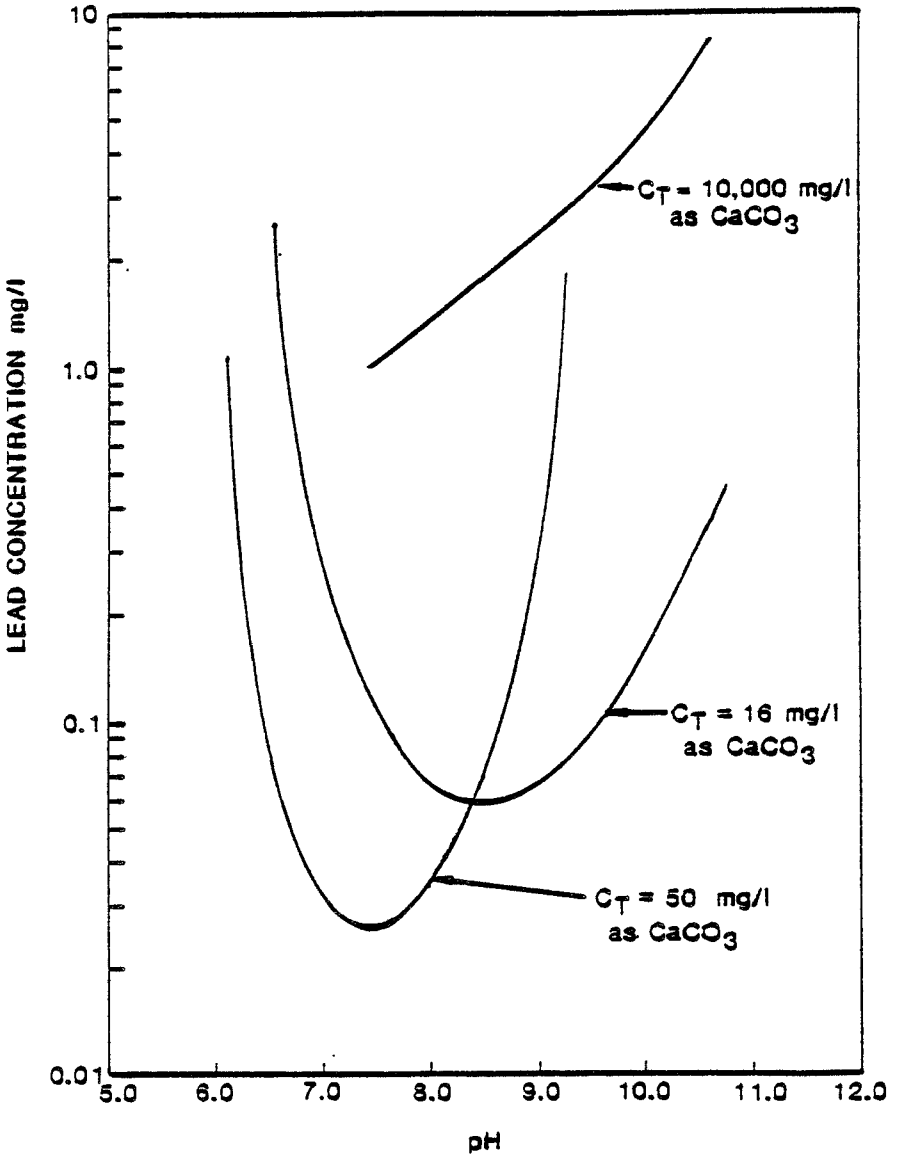

Figure 16. **Lead solubility as a function of carbonate concentration.**

SOURCE: PATTERSON, J.W., SCALA, J.J., AND ALLEN, H.E.; HEAVY METAL TREATMENT BY CARBONATE PRECIPITATION, PROC. 30th IND. WASTE CONF., PURDUE UNIV., 1975.

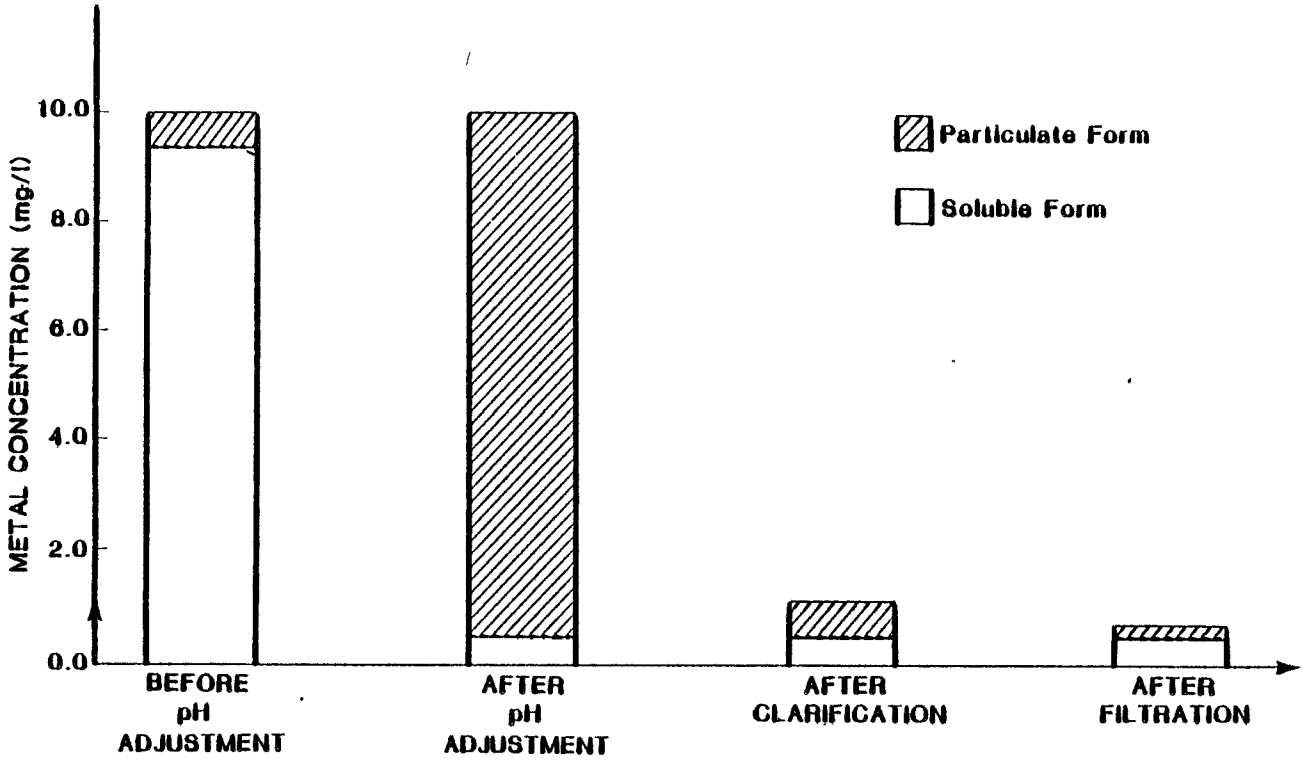

Figure 17. **Metal concentration versus treatment process.**

from left to right on Figure 17, it can be seen that the pH adjustment step changes the relative proportions of soluble and insoluble metal content, but does not in itself reduce the total metal concentration. However, clarification in general removes the majority of the particulate matter, and filtration removes even more, while leaving the soluble metal concentration unchanged. Because the optimum pH value for precipitation of a metal may occur at a pH greater than that allowed by regulatory authorities, post pH adjustment or final neutralization is sometimes necessary. The effect of final pH adjustment will be to change the concentration of the particulate and soluble metal concentration. Either form may increase or decrease depending upon the metal solubility, and the initial pH and final pH to the post pH adjustment process. However, the total concentration of the metal will not change during the process. The two possible effects that final neutralization can have on soluble and particulate metal concentration are shown in Figure 18. From Figure 18 as with Figure 17, it is apparent that changes in pH will change the concentration of the forms of the metal but will not increase or decrease the total metal concentration.

Changes in the pH of wastewater can occur as the result of acid or alkali addition such as in the final neutralization basin. However, changes in the pH of a wastewater can also occur because of introduction of CO_2 into the wastewater, especially for poorly buffered waters. Introduction of CO_2 into the water can occur slowly in a tank open to the atmosphere or more rapidly by aeration or turbulence.

OPERATIONAL PROCEDURES

The objective of precipitation is to cause the metal ion to form an insoluble precipitate which can be removed by separation techniques such as sedimentation or filtration. To control the metal precipitation process, the operator should perform the necessary process monitoring and should apply the necessary control strategies to the system variables.

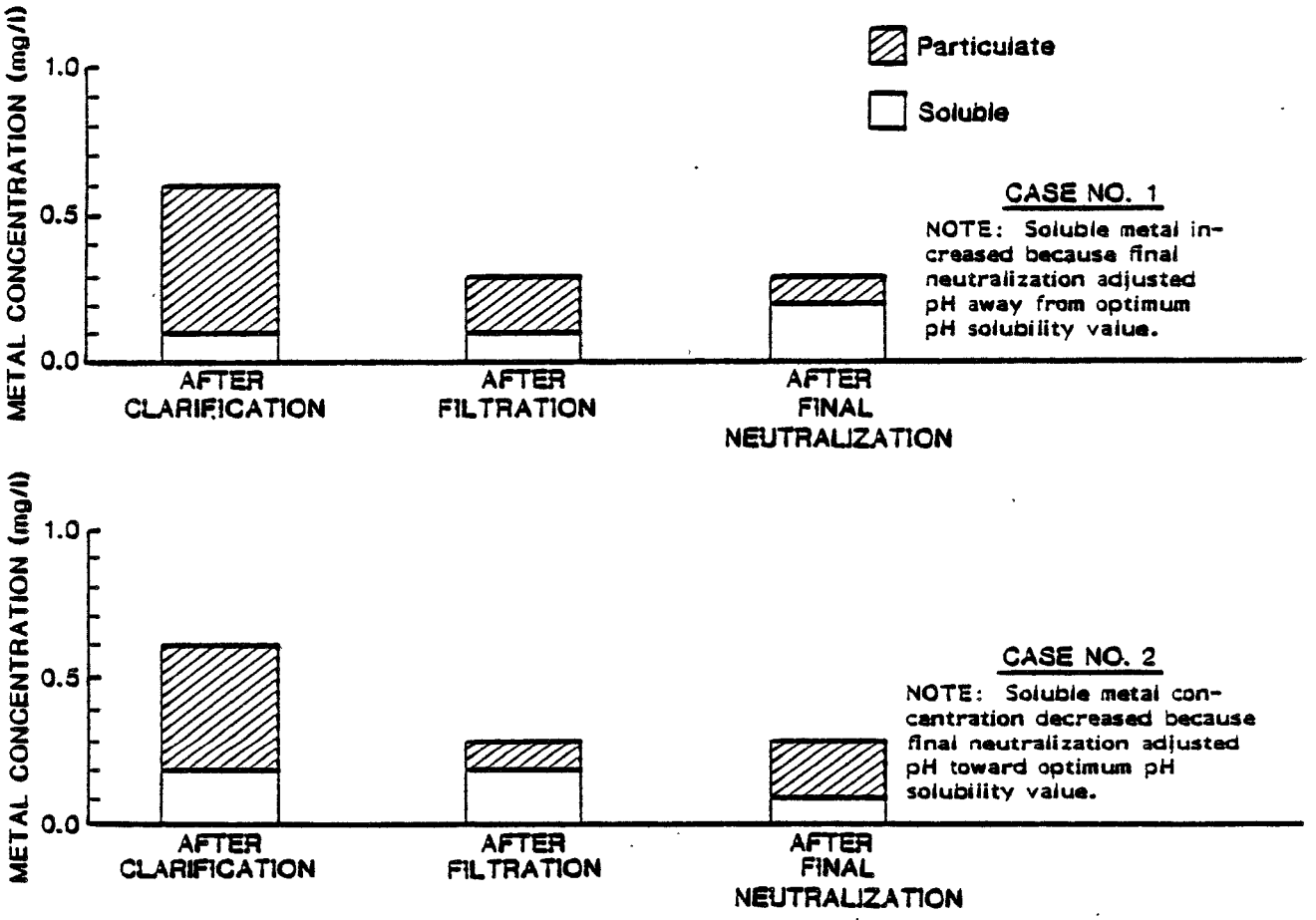

Figure 18. **Metal concentration after treatment process.**

Process Monitoring

Since precipitation involves a number of processes such as pH adjustment, sedimentation, and filtration, process monitoring will involve all these processes. The main parameters involved in monitoring each of the processes are total and dissolved metal, pH, and total suspended solids. The regular or continuous monitoring requirements are summarized in Table 10.

pH Adjustment --

The influent total metal concentration, effluent soluble metal concentration, and reactor pH should be monitored. Ions such as carbonates or phosphates may be analyzed to determine if these ions have an effect on metal solubility.

Sedimentation --

The effluent total and soluble metal concentration should be measured in order to determine the particulate metal concentration that is not removed by sedimentation. Influent and effluent suspended solids should be measured to determine the amount of sludge that must be removed. A correlation may exist between effluent suspended solids and effluent total metal concentration.

Filtration --

Since filtration is typically the last treatment process employed, effluent total metal concentration will indicate permit compliance. The influent and effluent particulate metal concentration should be determined to evaluate filter performance. Influent suspended solids should be measured to allow control of the filtration process.

The key to successfully operating a metal precipitation system is understanding the relationship between the particulate and soluble metal concentration and the treatment processes. An example of the difference between particulate and soluble metal concentration and how it affects permit compliance is shown in Figure 19. Case No. 1 presents data for a

TABLE 10
METALS PRECIPITATION
PROCESS MONITORING REQUIREMENTS

Process	Parameter	Frequency	Reason for Monitoring
1. pH Adjustment	Flow	Continuously	To adjust dosages for feedforward control.
	Influent Total Metal Concentration.	Daily	To determine mass loading.
	Effluent Soluble Metal Concentration.	Daily	To evaluate performance.
	Reactor pH	Continuously (Calibrate daily)	To adjust reagent dosages and for evaluating metal solubility.
2. Sedimentation or Filtration	Flow	Daily	To evaluate effect of hydraulic loading on metal precipitate removal.
	Influent TSS	Daily	To determine influent mass loading of TSS.
	Effluent TSS	Daily	To determine TSS removal performance and to establish correlation between metal concentration & TSS.
	Influent TSS-Effluent TSS (Mass Loadings)	Daily	To determine mass loading of sludge to be removed.
	Effluent Soluble and Total Metal Concentration	Daily	To determine particulate metal concentration in effluent and particulate metal removal performance of separation device.

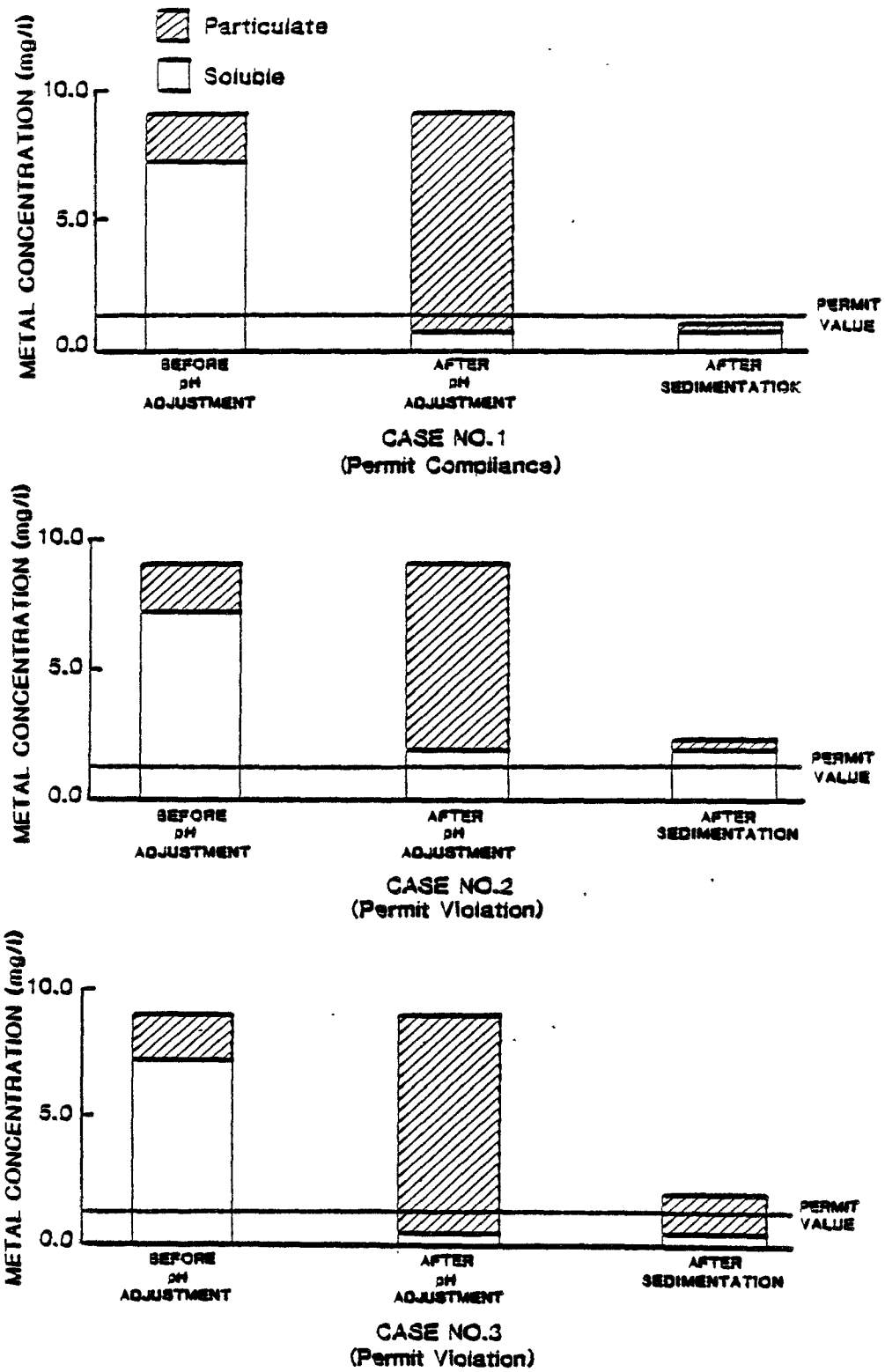

Figure 19. **Metal concentration versus treatment process.**

treatment system which has good operation of pH adjustment and sedimentation. Case No. 2 presents a system which has poor operation of the pH adjustment process. This is evidenced by a high soluble metal concentration. Soluble metal can be measured by filtering a sample immediately after collection. Care must be taken that the pH does not change. A discussion of the variables which affect the solubility of each metal are presented in the PERFORMANCE portion of this Section.

The third case, Case No. 3, presents a treatment system which has good operation of the pH adjustment system but poor operation of the sedimentation process. Poor sedimentation performance will be indicated by high effluent suspended solids concentration and high particulate metal concentration. Particulate metal concentration is the difference between total and soluble metal concentration. The causes and remedies for troubleshooting the sedimentation process are presented in the section on sedimentation. The operator should not attempt to correct the sedimentation problem by installing a filtration unit because the unit will foul with solids. Most filtration systems should be installed for wastewaters that are low in suspended solids.

Process Control Strategies

The control strategies associated with operating a metal precipitation system involve the chemical reagent used in pH neutralization and the operating pH. Other operating variables associated with operating the unit processes (pH adjustment, flocculation, clarification, and filtration) are listed and discussed for each unit process.

Hydroxide Precipitation--

The most common anion used to precipitate metals from wastewater is hydroxide. Hydroxide is generally added to the wastewater as calcium hydroxide (lime) but sometimes added as sodium hydroxide (caustic). The primary advantage for using lime is that a good settling precipitate is usually formed. The advantage for using caustic is less sludge generation. The solubility of metal hydroxides is presented in Figure 20.

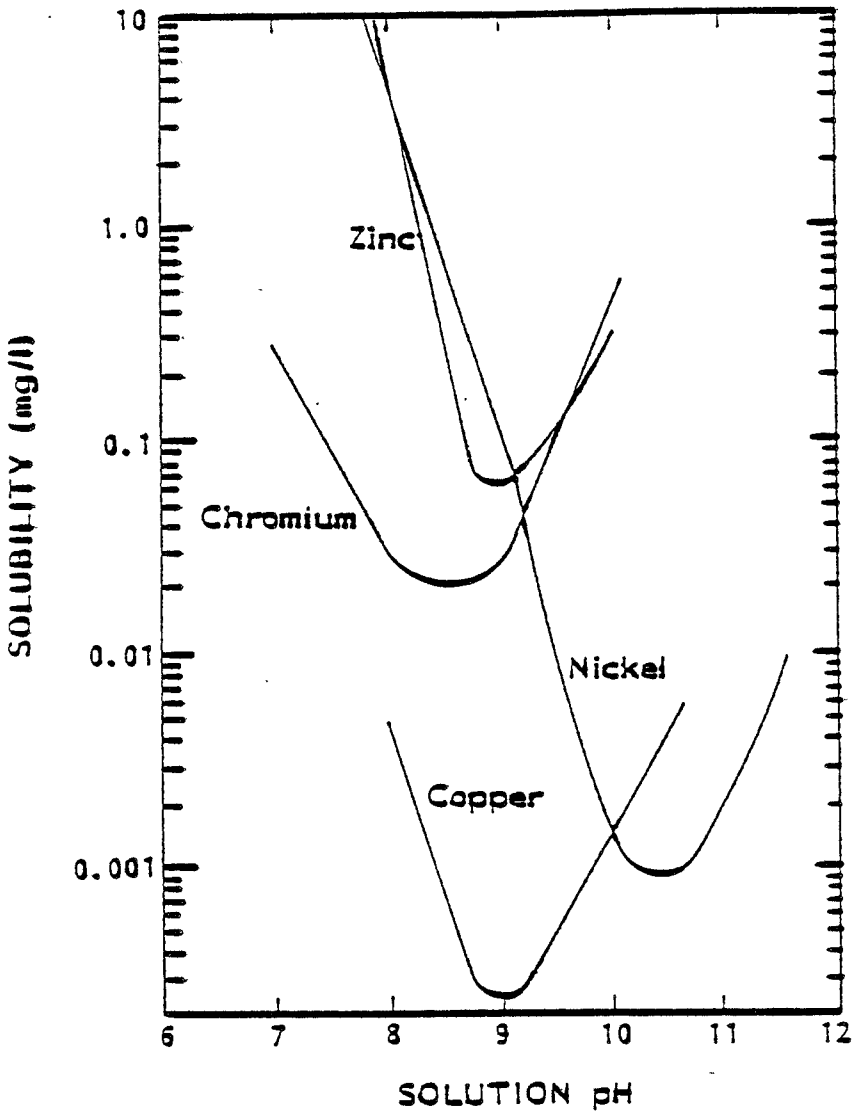

Figure 20. **Solubility of selected heavy metal hydroxides.**

SOURCE: USEPA, SULFIDE PRECIPITATION OF HEAVY METALS, EPA-600/2-80-139, JUNE, 1980, p. 104.

Because of the different pH ranges for minimum solubility of various metals, staged precipitation is sometimes needed.

Staged precipitation is a series of two or three units of pH adjustment process with each followed by a separation process such as sedimentation and/or filtration. An example of the necessity of staged precipitation is for a wastewater which requires removal of both nickel and trivalent chromium. The first stage would consist of pH adjustment to a pH of 8.5 followed by sedimentation and, possibly, filtration. The second stage would consist of pH adjustment of the wastewater from 8.5 to 10.5 followed by sedimentation and/or filtration.

Sulfide Precipitation--

Sulfide precipitation of heavy metals is gaining acceptance because most metal sulfides are even less soluble than metal hydroxides at alkaline pH values. Therefore, lower effluent metal concentrations can be accomplished through the use of sulfide rather than hydroxide. As with hydroxide precipitation, the solubilities of metal sulfides are pH dependent. The pH dependence for various metal hydroxides are presented in Figure 21. Figure 21 also shows the metal solubilities of metal sulfides. Sulfide can be added as hydrogen sulfide, sodium sulfide, or ferrous sulfide. If the sulfide is added as a water-soluble compound (e.g., H_2S or NaS), the process is referred to as soluble sulfide precipitation (SSP). If the sulfide is added as a slightly soluble salt (ferrous sulfide), the process is called insoluble sulfide precipitation (ISP). Figure 22 shows typical precipitation processes for hydroxide precipitation, SSP, and ISP.[4]

In addition to achieving extremely low solubilities for metal sulfides, the sulfide process has the ability to remove chromates and dichromates without preliminary reduction of the chromium to the trivalent state. Furthermore, the sulfide process will precipitate metals complexed with certain complexing agents. Iron sulfide has been demonstrated more effective for metal precipitation when chelating agents

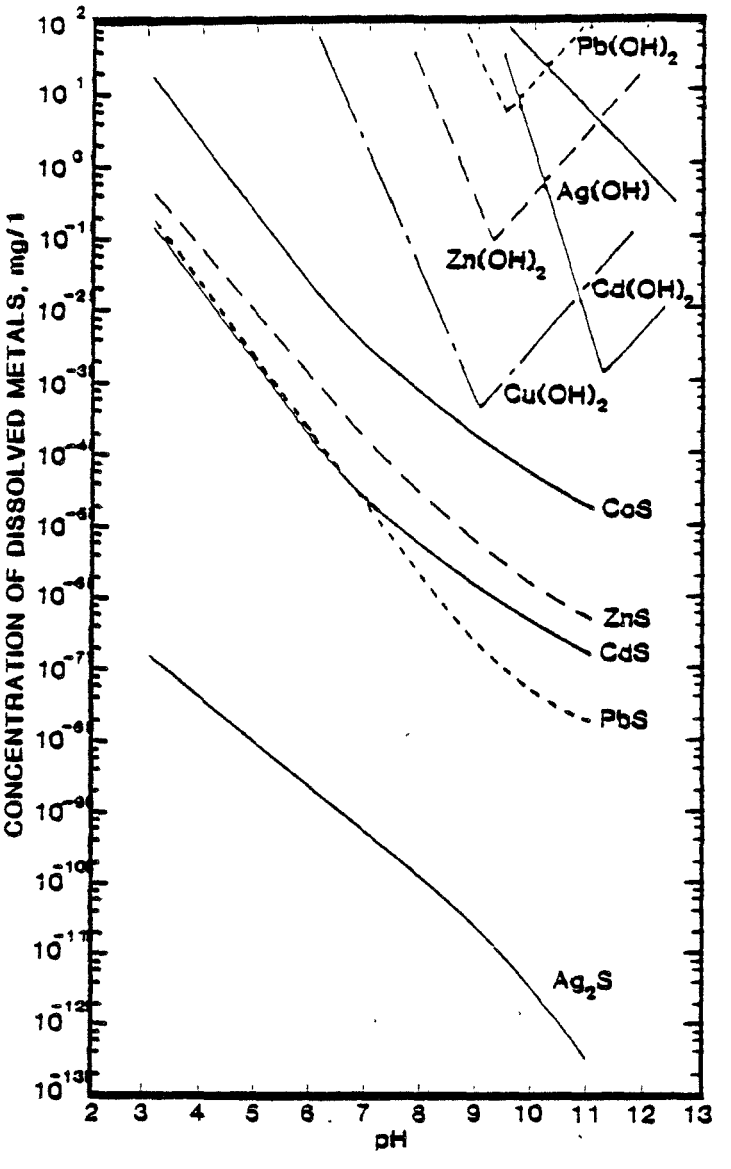

Figure 21. **Theoretical solubilities of metal hydroxides and sulfides versus pH.**

SOURCE: SCOTT, M.C.; SULFEX (TM)- A NEW PROCESS TECHNOLOGY FOR REMOVAL OF HEAVY METALS FROM WASTE STREAMS; PURDUE 32nd INDUSTRIAL WASTE CONFERENCE, 1977, p. 623.

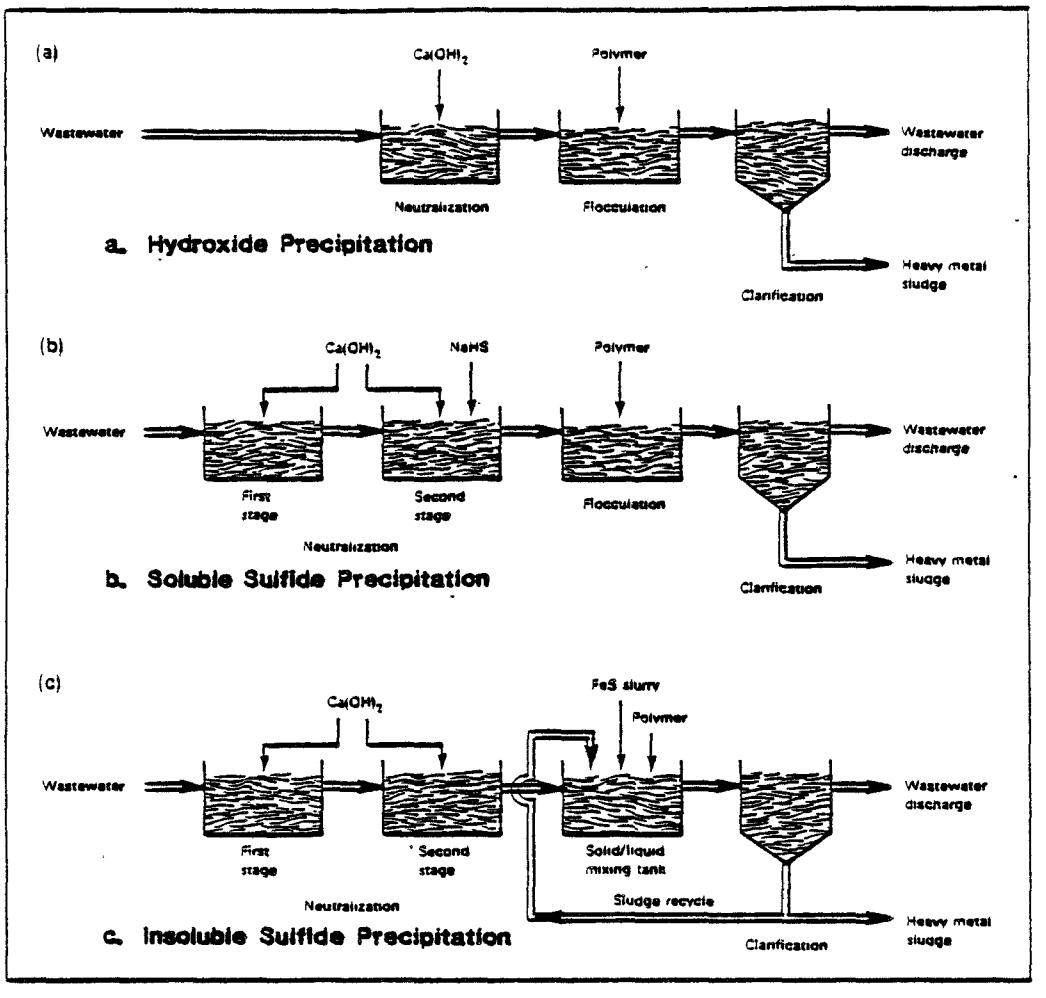

Figure 22. **Wastewater treatment processes for removing heavy metals.**

SOURCE: EPA REPORT NO. EPA 625/8-80-003.

such as EDTA or Rochelle Salt are present.[17] These tests were performed for copper, cadmium, chromium (III), nickel, and zinc precipitation. One disadvantage of the sulfide process is the evolution of toxic hydrogen sulfide gas for certain sulfide reagents if the pH should decrease below 8.0. However, the usage of iron sulfide virtually eliminates the possibility of evolution of hydrogen sulfide. Another disadvantage of the process is that high levels of excess sulfide sometimes must be oxidized to sulfate before discharge.

A key to good operation of the sulfide precipitation is applying the correct amount of sulfide. As with any precipitation reaction, excess reactant (sulfide) must be present to drive the precipitation reaction to completion. However, because sulfide is toxic, sulfide addition must be carefully controlled with only a minimum of excess sulfide used. High levels of unreacted sulfide will require post-treatment such as aeration to oxidize sulfide to sulfate.

TYPICAL PERFORMANCE VALUES

Typical performance values for removal of metals commonly present in plating and finishing wastes are discussed in the following. Also discussed are the effects that various compunds or ions may have upon the shape of the pH-solubility curve.

Chromium

A pH range of 8 to 9 is recommended to achieve the minimum solubility of trivalent chromium. However, this range is very dependent upon the concentration of anions in solution, particularly carbonates and phosphates. Thomas and Theis[18] have demonstrated that a bicarbonate alkalinity and pyrophosphate at concentrations as low as 250 mg/L as $CaCO_3$ and 30 mg/L as P, respectively, together cause appreciable complexation and may make alternatives other than lime impractical. Thomas and Theis showed that if caustic was used for pH adjustment of a wastewater containing pyrophosphate and carbonates not only would the pH range of minimum solubility be altered, but the supernatant chromium

concentrations would be greater than 1.0 mg/L. They recommended that lime should be substituted for caustic soda. The use of lime will cause precipitation and removal of most of the carbonate and pyrophosphate species from solution while providing doubly charged counter ions to aid in coagulation of the negatively charged $Cr(OH)_3$ colloid which exists at pH values above 8. An alternative to substitution of lime for caustic for solutions which contain chromium (III), carbonates, and pyrophosphates is to segregate the Cr(VI) wastes from waste rinses which contain carbonates and phosphates. The advantage for this alternative is that the caustic sludge volume is much lower than the lime sludge volume.

Copper

The presence of anions can affect the solubility of copper. The pH range of minimum solubility for copper hydroxide without the presence of interferences is 7.5 to 11.0. The soluble copper concentration at this level is approximately 0.03 mg/L. However, the presence of carbonates can increase the soluble copper concentration.[19] Patterson showed that the soluble copper concentration for a solution with a carbonate species concentration of 500 mg/L as $CaCO_3$ was 4.5 mg/L at a pH of 7.5, 0.25 mg/L at a concentration of 8.5, and 0.09 mg/L at a concentration of 9.5. Therefore the presence of bicarbonate at a concentration of 500 mg/L as $CaCO_3$ will increase the copper solubility concentration 15-fold at a pH of 7.5.

The operator can reduce the effect of carbonate by several methods. One solution is to reduce or eliminate the concentration of carbonates. An alternative is to use lime and operate at a pH of 10.0 or higher so as to form the insoluble calcium carbonate precipitate.

Lead

The pH range of minimum solubility for lead is 8.5 to 9.5 for lead hydroxide precipitation as seen in Figure 16. Patterson[20] noted that the effect of carbonate on lead solubility is a complex function of carbonate concentration. Furthermore, he reported that at a treatment pH

near 9.0, increased carbonate will increase lead solubility while the reverse pattern will occur at a pH near 6. Bicarbonate concentrations as low as 25 mg/L as $CaCO_3$ will result in a soluble lead concentration of 4.1 mg/L at a pH of 9.3.

Carbonate can be introduced into the system in many ways. One source of carbonate is municipal water supplies. Municipal water supplies in the West, Southcentral, and Midwest regions of the United States have alkalinities greater than 100 mg/L as $CaCO_3$. A second source of carbonate is the atmosphere. Depending upon the equilibrium position (pH and concentration), aqueous solutions not in equilibrium may either evolve or take up carbon dioxide. The equilibrium bicarbonate concentration at a pH of 8.0 is 25 mg/L as $CaCO_3$. The third source of carbonate is carbonate salts used in plating solutions. Examples of these include sodium carbonate, potassium carbonate, and nickel carbonate. The dosages of these salts in solution can be extremely high (e.g., 50,000 mg/L).

The problem of excess carbonate or bicarbonate concentrations can be solved by reducing or eliminating the carbonate concentration by controlling the source or by adding lime to the wastewater and precipitating calcium carbonate. Calcium carbonate precipitation forms a heavier floc which aids in the settling of the lighter lead hydroxide floc.

Mercury

Sulfide precipitation for mercury removal is commonly used. Patterson[13] reported that sulfide precipitation will achieve 99+ percent removal for high initial mercury levels, but the minimum effluent mercury concentration that is achievable with precipitation followed with filtration or activated carbon appears to be 10-20 g/L. Best results for sulfide precipitation are obtained at pH values less than 9.0. Patterson[13] listed three drawbacks of sulfide precipitation. These are the formation of soluble mercury sulfide complexes at

high levels of excess sulfide, the difficulty of monitoring excess sulfide levels, and the problem of toxic sulfide residual in the treated effluent.

Nickel

The theoretical solubility curve for precipitation of nickel as nickel hydroxide was presented in Figure 20. A study conducted by Patterson has shown that experimental results for nickel hydroxide precipitation will be similar to the theoretical results. However, the actual solubility curve for carbonate precipitation will probably be greater than the theoretical carbonate solubility. This anomaly occurs because the kinetics of precipitation for nickel carbonate are very slow and the precipitate will not form within typical treatment plant detention times.[20]

Zinc

The theoretical solubility for zinc hydroxide precipitation is presented in Figure 20. This solubility curve is for a wastewater which is low in carbonate alkalinity. The effect of carbonate either present in the wastewater or induced by the uptake of atmospheric CO_2 is to lower zinc solubility with increased carbonate levels.[20] This effect is especially significant at a pH value less than 9.0 where the presence of carbonate alkalinity can significantly enhance the zinc precipitation process.

Other Metals

Metals other than those discussed in the preceding can be removed from metal finishing wastewates by precipitation. For example, silver may be recovered as the sulfide, although silver hydroxide is relatively soluble.[6] Aluminum may be removed by precipitation as the hydroxide or by phosphate precipitation at pH 5.[15] In point of fact, metal finishing wastewaters may be treated for phosphate removal by addition of aluminum salts and precipitation of $AlPO_4$.

TROUBLESHOOTING GUIDE

The troubleshooting guide for the metal precipitation process is presented in Table 11. The problem areas in the metal precipitation process involve too high a concentration of soluble metal in the effluent (which often traces to inadequate pH adjustment or control) and too high a concentration of particulate metal in the effluent (which usually traces to the solids separation system). In the case of sulfide precipitation processes, sulfide odors may arise due to improper concentrations of the sulfide salt or too short a reaction time.

TABLE 11
METAL PRECIPITATION TROUBLESHOOTING GUIDE

PROBABLE CAUSE	CHECK OR MONITOR	REASON	CORRECTIVE ACTION
OPERATING PROBLEM 1: Total metal concentration in final discharge is too high.			
1a. Soluble metal concentration in discharge is too high.	- Compare soluble metal concentration for pH adjustment process to soluble concentration for plant discharge.	- Shifts in pH of wastewater from pH adjustment to final discharge will affect metal solubility.	- If soluble metal concentration of pH adjustment process is low and within permit, then operation of pH adjustment is acceptable, and cause of problem is solids separation. See Probable Cause (c). - If soluble metal concentration of pH adjustment process is high and out-of-spec, then see Probable Cause (b).
1b. Soluble metal concentration in pH adjustment discharge is too high.	- Check operating problems for the pH adjustment process.	- The problems listed for pH adjustment (see Table 9) can result in soluble metal concentration that is too high.	- Perform corrective action as identified in Table 9.
	- Check operating pH of pH adjustment process.	- The operating pH may not be at optimum pH for precipitation.	- Review or develop pH-solubility diagram for metal. Changing the operating pH of the system can affect precipitation of other metals.
	- Analyze pH adjustment discharge for high concentration of ions.	- Ions, especially phosphates and carbonates, can alter solubility of metal ions.	- Coprecipitate ions in treatment process with lime or other precipitation reagents; eliminate ions that cause problem from wastewater.
OPERATING PROBLEM 2: Particulate metal concentration in final discharge is too high.			
2a. Floc carryover.	- Poor operation of flocculation system.	- Operation of flocculation system must enhance sedimentation.	- Perform corrective action in Table 13.
	- Poor performance of sedimentation system.	- Sedimentation units should remove most of insoluble precipitate formed in pH adjustment process.	- Perform corrective action in Table 15.

TABLE 11
(Continued)
METAL PRECIPITATION TROUBLESHOOTING GUIDE

PROBABLE CAUSE	CHECK OR MONITOR	REASON	CORRECTIVE ACTION
	- Poor performance of filtration system (if provided).	- Filtration units should polish the discharge from sedimentation system.	- Perform corrective action in Table 17.
	- Shifts in pH of the wastewater from pH adjustment process to final discharge.	- Shifts in pH of the wastewater (especially across the post neutralization tank) from the pH adjustment to final discharge will affect metal solubility and, hence, particulate metal concentration.	- If changes in pH occur, then analyze soluble metal concentration for pH adjustment discharge and final discharge. Refer to Probable Cause 1a.
OPERATING PROBLEM 3: Sulfide odor in effluent.			
3a. Too high a concentration of sulfide salt used.	- Sulfide application rate.	- Too high a concentration or too short reaction time will cause sulfide odors.	- Modify sulfide precipitation procedures. Decrease sulfide application rate.

SECTION 10

FLOCCULATION

INTRODUCTION

Flocculation is the process whereby particles are gently agitated to enhance particle agglomeration. The purpose of flocculation is to increase the size of the floc because larger floc particles settle faster than smaller floc particles. The flocculation process generally follows the pH adjustment process which generates the flocculant particles and precedes the sedimentation or filtration process which removes the flocculant particles from the wastewater. Flocculation of particles can be accomplished in tanks, basins, or in pipes. Polymers, which are used extensively to enhance the particle agglomeration for metal finishing wastewaters, are typically added in the flocculation tank or basin.

THEORY OF OPERATION

The key to flocculation is to promote particle contact and agglomeration without providing excess agitation that will shear the floc into smaller particles. Agitation should be carefully monitored and controlled so that the floc particles will not be sheared. The amount of agitation in a flocculation tank can be determined by calculating the mean velocity gradient. The mean velocity gradient is a function of the power input, the basin volume, and viscosity of the water.

In addition to depending upon proper agitation, particle contact and agglomeration will also depend upon the size of the particles and

their charge in solution. Coagulants are added because they destabilize the particles in solution by altering the charge of the particles and bridging small particles into masses or flocs. Generally the larger the size of the floc, the faster the particles will settle. Both inorganic metal salts and organic polymers are used to aid in particle settling. Some of the inorganic chemicals used are aluminum sulfate (alum), ferric chloride, ferrous sulfate, and lime.

Determination of the best coagulant for a given system should be based upon jar tests and scale-up factors. Jar tests are a series of bench scale tests which can be employed to simulate chemical addition, floccuation, and clarification. A "gang stirrer" is commonly used to perform four to six jar tests at one time. Each jar test is subjected to one different condition from the prior test, such as polymer dosage. When performing a jar test, the operating condition of the test should simulate the conditions in the field. The conditions of the full-scale flocculation/clarification system which should be duplicated by the jar test include similar dilutions of the concentrated polymer, similar HRT, and similar mixing intensity of the flocculation/clarification system. The procedure for jar testing for emulsion breaking presented in Section 5, Oil Removal, are applicable with only minor modification to coagulation processes.

Chemical coagulants are used extensively in the treatment of metal finihsing wastes. However, the type and dosage of the coagulant commonly are not optimized. This failure to optimize the system can cause increased chemical cost and/or poor performance. The operator should perform a series of jar tests to determine the optimum dosage whenever the wastewater characteristics change. Every six to twelve months, the operator should evaluate different coagulants in order to select the most cost-effective coagulant.

DESCRIPTION OF EQUIPMENT

Flocculation of particles is promoted by gently stirring the wastewater. There are several methods which range from simple, inexpensive

devices to large pieces of equipment for flocculation. Three types of flocculation equipment commonly used are in-line mixers, reactor-clarifiers, and flocculation basins. In-line or static mixers are simple devices mounted in the pipe. A bypass which will allow for the in-line mixer to be taken out of service should also be provided.

Flocculation can be an integral part of a clarifier (reactor-clarifiers). This system is accomplished by providing an inlet well with a mechanical mixer. Variable speed mixers allow the operator flexibility in controlling the mixing intensity.

Flocculation basins are used for systems which require long mixing periods or for systems in which it is necessary to vary the mixing intensity within the basin. Long mixing periods are desired for slow reacting reagents such as limestone. Flocculation in the tank is usually provided by mechanical mixers but can be provided by either stationary baffles or diffused air.

OPERATIONAL PROCEDURES

To control the operation of the flocculation process, the operator should conduct the necessary process monitoring, perform any control calculations needed, and understand the process control strategies or variables.

Process Monitoring

The primary parameters which should be monitored to control the flocculation process are power input and polymer dosage. Other parameters which should be measured for the polymer system include optimum dosage (e.g., by jar testing), polymer type, and polymer feed concentration. These monitoring requirements are shown in Table 12.

In addition to heeding these requirements, the operator should inspect the flocculation system regularly. The operator should inspect

TABLE 12

FLOCCULATION
PROCESS MONITORING REQUIREMENTS

	Parameter	Frequency	Comment
1.	Polymer Dosage	Regularly	- Dosage should be determined at least hourly.
2.	Polymer Jar Tests	Daily	- Jar tests should be performed daily to determine optimum dosage.
3.	Polymer Type	Occasionally	- Jar tests should be performed occasionally to select best polymer when process problems dictate.
4.	Polymer Feed Concentration	For each batch	- Concentration should be calculated and must not exceed manufacturer's recommendations.
5.	Flocculation Horsepower	Occasionally	- Velocity gradient should be calculated occasionally so that correct power is applied.

mixing baffles and look for hydraulic short-circuiting, torn impellers, or solids accumulation. Any deficiencies should be corrected immediately.

Example Calculations

Example calculations are shown below for determining the mean velocity gradient and the polymer dosage.

Mean Velocity Gradient --

The mean velocity gradient MVG is a function of the mixing intensity or mixing horsepower. The mathematical formula for MVG is as follows:

$$MVG = \left(\frac{P \times 550}{mV} \right)^{1/2}$$

where MVG = mean velocity gradient (sec^{-1})

P = power input (Hp)

m = dynamic viscosity ($lb\text{-}sec/ft^2$)

V = flocculation volume (ft^3)

Consider a flocculation system with the following characteristics: Horsepower = 12 Hp, Viscosity = 2.05×10^{-5} $lb\text{-}sec/ft^2$, and Volume = 75,000 ft^3.

$$MVG = \left(\frac{12 \times 550}{2.05 \times 10^{-5} \times 75{,}000} \right)^{1/2}$$

$$MVG = 66/sec$$

Polymer Dosage --

The polymer dosage can be determined from the following formula:

$$PD = \frac{q \times C}{6000 \times Q} \times 10^6$$

where: PD = polymer dosage (ppm)

q = polymer flowrate (gal/hr)

C = polymer concentration in solution feed (%)

Q = wastewater flowrate (gpm)

Consider the following example: Polymer flowrate = 2.0 gal/hr, Polymer concentration = 0.5%, and Wastewater flowrate = 10 gpm. The polymer dosage will be

$$PD = \frac{2.0 \text{ gal/hr} \times 0.5}{6000 \times 10} \times 10^6$$

$$= 16.7 \text{ ppm}$$

Process Control Strategies

The two primary adjustments controlling the flocculation process are mixing intensity and polymer addition. The operator should determine the optimum set points for these adjustments based on the settling ability of the flocculant particles.

Mixing Intensity--

The operator should control the mixing intensity such that the desired level of agitation between metal particles and polymer is achieved. The correct amount of agitation will result in particles that settle rapidly and do not require high dosages of polymer. Under-agitation between particles and polymer will result in the formation of very small floc particles that do not settle readily. Under-agitation of the flocculation process may be caused by not providing sufficient power or not allowing enough time for particle/polymer contact.

The power input to a flocculation basin should be controlled to obtain a mean velocity gradient between 20 and 75 sec^{-1} for a 15 to 30 minute detention time. High velocity gradients should be used for shorter detention times and low velocity gradients should be used for

longer detention times. Polymers should be added to the inlet or further upsetream of the floculation basin to achieve maximum contact.

Under-agitation for in-line mixers is a result of not providing sufficient head loss through the mixer. The minimum pressure drop for most in-line mixers should be approximately one foot of head for a fluid velocity between 1 and 2 feet per second (fps). For most systems, a four or six element in-line mixer will be adequate. Lower element mixers should be used for systems where there are changes in the direction of flow from the mixer to the settling device.

Over-agitation of the wastewater may shear the floc into smaller particles which also will not settle. Too much agitation may be caused by operating the flocculation paddles at too high a speed or by using a centrifugal pump to pump flocculated wastewater. Also over-agitation may be caused by high velocities in the pipe or the inlet to the clarifier.

Polymer Addition--[24,35,26,27]

Polymers used as coagulants in wastewater treatment can be either synthetic or natural. They are composed of many small compounds (monomers), which can be identical to each other, or of different materials. Polymers are chains of monomers whose number is varied by reaction to produce polymers with different molecular weights; those used in wastewater treatment normally range from 100,000 to 1,000,000. Their prime function is to act as a "coagulant aid," a term applied to chemicals such as lime that are added to wastewater, in addition to conventional coagulants, to improve colloidal destabilization and flocculation.

The term "polyelectrolyte" is used to describe chemicals of charged groups in the form of a polymer. The polyelectrolytes are further classified according to the type of charge they will have in solution, as follows:

Anionic Polyelectrolytes-negative charges
Cationic Polyelectrolytes-positive charges
Nonionic Polymers (Nonionic Polyelectrolytes)-neutral charges

The variety of monomers available as buildling materials for polymers is endless, meaning that there is a large assortment of polyelectrolytes available for use in coagulation.

Polymers can be purchased dry or in liquid form. They are easily handled at the plant site and are generally nonhazardous. The usual protection from dust is required, and the storage facilities for the dry powders must be moisture-free. The materials of construction for storage and handling equipment are normally stainless steel 316 and plastics; selection is made on the basis of the polyelectrolyte chosen.

The coagulation mechanisms of polyelectrolytes are associated with charge reduction of the colloids, which results in adsorption or enmeshment of the individual particles to form a settleable mass. Due to the size of the polymeric compound, the polymers can attach themselves to the surfaces of the suspension at one or more sites. The excess part of the polymer chain extends into the solution and adsorbs onto other particles. The size of the floc being formed is generally restricted by the strength of the attractive forces between the particles and those between the solids and the stream.

Polyelectrolytes are used extensively in coagulation processes because of their versatility, range of properties, handling ease, and effect on coagulation rates. Generally, cationic polyelectrolytes are used alone or as aids to other coagulants in forming metallic salts. Anionic polymers are used as coagulant aids in colloidal destabilization where negative charges are required to bridge the positvely charged colloids. Nonionic polyelectrolytes are added to increase colloid concentration, thereby aiding floc formation, and to increase floc size by attaching themselves to agglomerated colloids.

Polyelectrolytes will:

- o Increase the size and stability of the flocs;
- o Decrease dosages of conventional chemical coagulants, such as alum;
- o Decrease floc formation;
- o Extend the effective range of coagulant dosage;
- o Extend range of pH over which conventional coagulants are effective; and
- o Increase suspended-solids removal efficiencies.

In actual plant use, liquid polymers are usually diluted to approximately a 1% solution (vol/vol). This is done by adding one part (by volume) of polymer to 100 parts (by volume) of water. Dry polymers are usually diluted to approximately a 0.1% solution, (wt/wt). This is done by adding one part of dry polymer (by weight) to 1000 parts of water (by weight). An example of a 1% solution of liquid polymer is to add one gallon raw polymer to 100 gallons of water. To prepare the same solution for a jar test one adds one milliliter of liquid polymer to 100 milliliters of water. An example of a 0.1 % solution of dry polymer would be to add .834 lbs of polymer to 100 gallons of water (834 lbs). To prepare a 0.1% solution for a jar test one adds one gram of polymer to one liter of water (1000 grams). Polymer solutions in excess of these concentrations may be difficult to mix or to pump.

Polymers vary widely as far as their shelf life is concerned and mixed polymers often lose their effectiveness in as short a time as one day. It is recommended that only enough polymer to last for one day's run time be mixed. The method used to add polymer to water and mixing times used are critical. A recommended procedure is to fill the mixing tank to about 3/4 of desired level and start mixers and add polymer very slowly. After all the polymer is added, the tank is filled to the desired level and mixed for a minimum of 30 minutes. Mixing times vary widely for different polymers so one is advised to check with the polymer manufacturer for detailed information.

Different polymers are often not compatible. If polymers being used are changed, all lines and pumps should be thoroughly flushed out, as should mix tanks and day tanks, before the new polymer is added.

Polymers should be protected from extreme changes in weather and so should be stored inside.

Handling, storage, and feed-flow control facilities are as important as proper selection of coagulants and determination of the coagulant dosage. The wrong coagulant dosage can adversely affect the settling and flocculation rates of suspended solids by causing the colloidal suspension to restabilize. Low coagulant flow rates have similar effects.

A data sheet should be completed when performing jar tests. The data sheet contains the various parameters and observations which are important when performing a jar test.

TYPICAL PERFORMANCE VALUES

The performance of the flocculation process can be measured by how well the flocculant particles settle or are filtered. A well operated flocculation process will generally require low dosages of coagulants and will produce low concentrations of suspended solids in the effluent.

TROUBLESHOOTING GUIDE

The troubleshooting guide for the flocculation process is presented in Table 13. The chief problem of the flocculation process is poor settling floc, which may be caused by under-agitation, overagitation, or improper polymer use. Improper polymer use may include the use of an ineffective polymer or the improper application of an otherwise effective polymer.

TABLE 13
FLOCCULATION TROUBLESHOOTING GUIDE

PROBABLE CAUSE	CHECK OR MONITOR	REASON	CORRECTIVE ACTION
OPERATING PROBLEM 1: Poor settling floc.			
1a. Underagitation (Tanks or Basins)	- Calculate mixing intensity of basin or tank.	- Inadequate power will not provide correct particle/ polymer contact.	- Increase horsepower.
	- Check tank baffles and mixer impeller.	- Worn or broken baffles and impeller will cause underagitation.	- Repair baffles and impeller as needed.
	- Calculate theoretical detention time of basin or tank.	- Sufficient detention time required for particle/ polymer contact.	- Increase detention time by reducing flowrate at the equalization basin (if possible).
	- Observe basin for short-circuiting.	- Short-circuiting due to accumulation of solids or improper placement of inlet and outlet structures may reduce detention time.	- Remove solids or relocate inlet and outlet structures if possible.
1b. Underagitation (In-line mixing)	- Check operation of inline mixers.	- Worn or torn elements may reduce mixing capactiy.	- Repair/replace as necessary.
	- Determine number of changes in direction of flow due to number of elements for in-line mixer plus number of bends in piping.	- Four to six or more changes in direction of flow (velocity = 1 to 2 fps) are recommended minimum.	- Add more in-line mixing by adding more changes in direction of flow (Add in-line mixer or bends in piping.)
1c. Overagitation (Tanks or Basins)	- Calculate mixing intensity in basin or tank.	- Excessive power input may shear flocculant particles.	- Reduce horsepower.
	- Determine impeller speed or RPM.	- Excessive impeller speed may shear flocculant particles.	- Contact agitator manufacturer to determine correct impeller speed for particular application.
	- Look for excessive shear forces acting on flocculant particles.	- Excessive shear can be caused by centrifugal pumps or very high pipe velocities.	- Reduce shear forces by replacing centrifugal pumps with positive displacement pumps or replace pipe with larger diameter pipe.

TABLE 13
(Continued)
FLOCCULATION TROUBLESHOOTING GUIDE

PROBABLE CAUSE	CHECK OR MONITOR	REASON	CORRECTIVE ACTION
1d. Incorrect Polymer Addition	- Observe location of polymer addition.	- Improper location of polymer addition will not provide sufficient time for polymer/particle contact.	- Relocate polymer addition location.
	- Determine concentration and shelf life of polymer solution.	- Incorrect polymer solution concentration or too long a solution storage time can reduce effect of polymer addition.	- Make-up new polymer solution at correct concentration or be sure storage time of prepared solution is short.
	- Perform jar tests to determine optimum polymer dosage.	- Compare dosage determined from jar tests to dosage of full-scale system.	- Adjust polymer solution flow-rate to achieve optimum dosage.
	- Perform jar tests to determine optimum coagulant type.	- Optimum coagulant will depend upon jar test results, cost, and applicability to full scale system.	- Select new coagulant.

SECTION 11

SEDIMENTATION

INTRODUCTION

Particles or suspended solids which are generated in pH adjustment and flocculation processes can usually be separated effectively from the wastewater by gravity separation or sedimentation. Since the settling characteristics of flocculant particles will vary with the system, the operation of a sedimentation unit should be based on an understanding of the theory of the sedimentation process and the variables which affect its efficiency.

THEORY OF OPERATION

Settling basins handling wastewater must separate a variety of types of materials in the clarification zone. These materials vary from discrete particles at relatively low concentrations to suspensions of highly flocculent solids at elevated concentrations levels. For purposes of discussion these materials are divided into three general classes:[22]

1. Class I materials;
   (a) discrete particles,
   (b) settling rate independent of concentration, and
   (c) settling rate equal to overflow rate.
2. Class II materials;
   (a) particle growth,
   (b) overflow rate and detention time critical, and
   (c) rate of particle growth important.

3. Class III materials;
   (a) high suspended solids concentration,
   (b) settling rate is a function of the concentration, and
   (c) detention time and solids loading important.

Sedimentation of Class I suspensions is at a constant rate throughout the sedimentation basin and is, therefore, independent of depth. These are discrete particles which will not flocculate, for example, grit particles.

Sedimentation for Class II type suspensions occurs when larger particles settle at faster rates than smaller particles and overtake the smaller particles in their descent. If the particles have characteristics which might cause agglomeration, then growth of the finer particles to larger ones will occur. The greater the tank depth, the greater is the opportunity for contact among particles. Therefore, removal of suspended solids will be dependent upon basin depth as well as properties of the particles and fluid. The growth of individual particles enhances removal rates because larger particles create a reduced surface-area-to-mass ratio and thus the drag forces opposing subsidence are reduced. Polymer addition is normally required to improve particle agglomeration.

Class III suspensions are characterized by relatively high concentrations of material. The material may be flocculent, but not necessarily so. "Hindered settling" is the term generally used to describe Class III solids separation. An example of this type of separation is found in activated sludge settling. Design of settling basins for Class III suspensions must consider hydraulic as well as mass surface area loading.[22]

DESCRIPTION OF EQUIPMENT

The equipment used in gravity sedimentation includes clarifiers, parallel plate or tube settlers, and lagoons. The function of this equipment is to provide quiescent conditions to permit the heavier-than-water particles to settle.

There are many types of gravity clarifiers in service today. Conventional clarifiers vary in complexity but generally consist of a circular or rectangular tank with a mechanical sludge collecting device or with a sloping funnel-shaped bottom designed for sludge collection. Reactor clarifiers combine flocculation and sedimentation in one unit.

Parallel or tube settlers utilize a series of inclined settling plates in close proximity to each other. The inclined plate concept provides the effective surface area of each plate as projected onto the horizontal surface. This arrangement provides a higher effective surface area for a given horizontal surface. Since settling of metal finishing suspended solids is a function of the effective surface area, increasing this area by adding inclined plates allows the horizontal surface to be reduced. Therefore, the total horizontal surface area required for parallel or tube settlers will always be less than that for conventional gravity clarifiers.

Lagoons are also used for gravity settling. The advantage of a lagoon is that very little maintenance is required other than periodic sludge removal. However, appropriate disposal of the sludge is required; recent solid waste regulations can make effective lagoon operation an expensive procedure.

OPERATIONAL PROCEDURES

To control the operation of the sedimentation process, the operator should conduct the necessary process monitoring, perform any control calculations needed, and understand the process control strategies or variables. The operator also should understand how the design of the sedimentation equipment will affect treatment performance.

Process Monitoring

The performance criterion for evaluating sedimentation equipment is effluent total suspended solids concentration. While this parameter assesses the overall performance of the system, several other parameters

must be measured and incorporated into a regular monitoring program to operate a sedimentation system successfully and consistently. The parameters of importance are listed in Table 14.

The influent or effluent wastewater flowrate must be monitored to determine the solids loading and the hydraulic loading to the clarifier. If either the solids loading or the hydraulic loading to the clarifier is greater than the design value, then the performance of the process may decline significantly. Example calculations for determining the solids loading and the hydraulic loading (surface overflow rate) are discussed in the following section.

The influent TSS concentration should be measured to determine the influent solids loading and the effluent TSS concentration should be measured to determine removal performance. In addition to these analyses, the sludge depth and sludge suspended solids concentration should be measured so that a mass balance for suspended solids around the sedimentation basin can be determined. A mass balance is important for estimating sludge wasting rates and for adjusting the timer which controls operation of the sludge wasting pumps. It is essential that the samples collected for the mass balance analyses be flow proportional.

Example Calculations

Several computations should be made by the operator to measure the performance of a sedimentation unit. These calculations are surface overflow rate, solids loading rate, and mass balance. These calculations can be made with minimal effort and are helpful to the operator in avoiding and anticipating problems.

Surface Overflow Rate--

The surface overflow rate of a sedimentation unit is defined as the flowrate divided by the effective surface area.

$$\text{Surface Overflow Rate (GPD/Ft}^2\text{)} = \frac{\text{Flowrate (GPD)}}{\text{Effective Surface Area (Ft}^2\text{)}}$$

TABLE 14

SEDIMENTATION
PROCESS MONITORING REQUIREMENTS

Parameter	Frequency	Comment
1. Wastewater Flow	Continuously	To determine surface overflow rate and TSS loading.
2. Influent and Effluent TSS	Daily	To measure efficiency and TSS loading.
3. Sludge Level	Daily	To determine volume of sludge that must be disposed.
4. Sludge Solids Concentration	Daily	To determine solids loading to disposal equipment.
5. Temperature	Occasionally	Temperature can affect performance.
6. pH	Occasionally	pH affects the coagulation ability of many polymers and inorganic coagulants.

When calculating the surface overflow rate, only the effective surface area should be included in the calculation. The effective surface area is the area in which settling occurs and does not include inlet or outlet zones or dead space. Furthermore, the effective surface area for tube settlers or parallel plate separators should include the sum of the surface area of the plates projected on the horizontal surface.

The following calculation is offered as a guide for determining surface overflow rate.

Given: Flow = 126,000 gallons per day
No. of Tanks = 2
Area of each Tank = 100 ft^2

Surface Overflow Rate (SOR) is calculated as

$$SOR\ (GPD/Ft^2) = \frac{\text{Influent (GPD)}}{\text{Total Tank Area } (Ft^2)}$$

$$= \frac{126{,}000\ GPD}{2 \times 100\ Ft^2}$$

$$= 630\ GPD/Ft^2$$

Solids Loading--

Even though the settling basin design may meet the hydraulic loading criterion, it is still possible for overloading to occur on a solids basis. Solids overloading occurs when the solids loading to the clarifier exceeds the ability of the clarifier to transport solids to the bottom of the basin. The maximum solids loading for a settling basin generally will be a function of sidewater depth, overflow rate, and feedwell sizing.

Solids loading is determined by the following equation:

$$SL = \frac{Q \times C \times 8.34}{SA}$$

where

SL = Solids loading (lbs/day/ft^2)

Q = Influent flowrate (mgd)

C = Influent suspended solids concentration (mg/L)

SA = Effective surface area (ft^2)

Material Balance--

A suspended solids mass balance should be calculated around the sedimentation process to detemine if sufficient solids are being removed. The amount of sludge that should be removed from the sedimentation tank is the difference between the amount of solids entering the clarifier and the amount of solids leaving the clarifier.

This is shown mathematically as:

Mass to remove = Influent Mass - Effluent Mass

$$Q_R C_R = Q_i C_i - Q_e C_e$$

where Q_i = Influent Flow Rate to Clarifier (gpm)

Q_e = Effluent Flow Rate from Clarifier (gpm)

Q_R = Sludge Removal Flow Rate (gpm)

C_i = Influent Wastewater TSS concentration (mg/L)

C_e = Effluent Wastewater TSS concentration (mg/L)

C_R = Sludge TSS concentration (mg/L)

Also, a mass balance on flow gives the fact that flow out is equal to flow in minus the sludge removal rate, or $Q_e = Q_i - Q_R$.

Since $Q_e \simeq Q_i$ for systems where the influent flowrate is much greater than the sludge removal flowrate,

$$Q_R C_R = Q_e (C_i - C_e)$$

or

$$Q_R = \frac{Q_e (C_i - C_e)}{C_R}$$

An example problem which determines the sludge removal rate is:

Given: Influent TSS concentration = 550 mg/L

Effluent TSS concentration = 30 mg/L

Sludge removal TSS concentration = 20,000 mg/L

Plant Flow Rate = 90 gpm

Find: Sludge Removal Flow Rate

$$Q_R = \frac{Q_e (C_i - C_e)}{C_R}$$

$$Q_R = \frac{90 \text{ gal/min } (550 \text{ mg/L} - 30 \text{ mg/L})}{20{,}000 \text{ mg/L}}$$

$$Q_R = 2.3 \text{ gal/min}$$

The amount of sludge to be removed will be a function of the sludge concentration (C_R) and the sludge removal flow rate (Q_R). The greater the sludge concentration is, the lower the sludge removal rate will be. Conversely, the lower the solids concentration is, the greater the sludge removal rate will be. The concentration of the sludge will change with changes in influent loading (Q_i and C_i), effluent quality (C_e), and sludge removal rates. The operator should find the sludge removal flow rate which will not hydraulically overload the downstream dewatering units and which is high enough such that the sludge does not remain in the clarifier sedimentation tank for periods longer than a few hours. Allowing sludge to remain in the clarifier for long periods may cause the sludge to become cementous. Excess sludge in a clarifier increases the torque on the clarifier. High torque in the clarifier will actuate the torque limit switch which will turn off the clarifier rakes.

Process Control Strategies

Based on the monitoring data collected and the values calculated for surface overflow rate, solids loading, or mass (material) balance, the operator can adjust several variables of clarifier operation to meet permit requirements. The important variables in the operation of a sedimentation basin are sludge wasting, hydraulic loading, and chemical addition.

Sludge Wasting--

The sludge wasting rate or sludge removal volume should be adjusted so that sludge does not accumulate in the clarifier. The operator should adjust the sludge wasting rate so that the mass of sludge removed is equal to the difference between the influent mass of suspended solids and the effluent mass of suspended solids. An example of this calculation is presented in the "Material Balance" section discussed previously. The two types of sedimentation systems in which solids overloading are most likely to occur are parallel plate or tube separators and sludge recirculation systems. Solids overloading can occur in tube settlers due to plugging of the tubes. If this happens frequently, the operator should backwash the tube settlers more often in order to eliminate plugging.

Solids overloading can also be caused by not wasting enough sludge from the clarification system. This condition usually occurs in systems that employ sludge recirculation, but can occur if sludge is allowed to build up in the clarifier. The operator should calculate solids loading from the equation presented above. If the solids loading exceeds the maximum value, the operator should waste sludge from the clarifier or should decrease the flowrate temporarily.

Hydraulic Loading Capacity--

In addition to adjusting the flow rate to control the solids loading to the sedimentation unit, the operator should control the flow rate to the sedimentation process so as not to exceed its hydraulic loading capacity, if possible. The hydraulic loading of a sedimentation basin

is generally determined by the surface overflow rate calculation (see preceding discussion). The maximum hydraulic capacity of a sedimentation unit or clarifier will be dependent upon the type of clarifier, the settling characteristics of the particles, and the chemical coagulants used.

Surface overflow rates of 600 to 2880 gpd/ft^2 are recommended for calcium carbonate precipitate. Lower rates (600-1800 gpd/ft^2) are recommended for aluminum and iron floc[21]. Generally higher overflow rates are used for lime precipitation because of favorable settling characteristics. Lower overflow rates are employed for small systems and for systems which use caustic or soda ash for pH adjustment. The hydraulic loading capacity for a particular clarifier should be based on a relationship between flow rate and effluent suspended solids that has been calculated from actual operating data. If the operator determines that flows in excess of a given flow rate will cause treatment problems, then the operator should take steps necessary to reduce the flow rate.

The most practical way to control the flow rate is with a variable level equalization tank or surge tank. However, peak flow rates can be minimized by scheduling tank washdowns and clean-ups during periods of low hydraulic loading.

Coagulant Addition--

The operator can control the settling rate of particles by adjusting the coagulant or polymer addition system. The polymer addition variables which can affect settling are polymer type and dosage, point of injection, and flocculation. The operator should refer to the troubleshooting table for flocculation (see Table 13) for adjusting the polymer addition system.

Design Characteristics

The performance of sedimentation equipment will depend upon operating variables such as influent flow, sludge wasting, and polymer

addition, but will also depend upon factors beyond the control of the operator. These factors can be a function of either the wastewater characteristics or the design of the system. Generally, proper sedimentation of the wastewater will result in suspended solids concentrations of less than 50 mg/L.

The factors which are associated with the design of a sedimentation basin are discussed below.

Flow Variations--

Flow variations can be caused by extremes in instantaneous flows or by a constant speed pump cycling on and off. High instantanous flows can be reduced with equalization, elimination of storm water inflow/infiltration, or reduction of the rate at which high volume wastes are discharged.

Cycling on and off of a constant speed pump can cause pulsating turbulence in the clarification zone and can damage the pump and motor. A number of solutions are available to correct this problem. Part of the discharge from the pump can be recycled back to the pump sump or the pump can be throttled with a valve. Other solutions include replacing the constant speed pump with a variable speed pump and adding a smaller capacity constant speed pump.

Inlet Design--

The Manual of Practice for Wastewater Treatment Plant Design reports that next to the importance of proper sizing of a settling tank is proper inlet design. The inlet to a sedimentation basin must be an effective arrangement to achieve horizontal and vertical distribution of the flow across the entire cross-sectional flow-through area. The inlet design must also dissipate the inlet energy. The maximum inlet velocity to the center inlet well should not exceed 3 fps and the outflow velocity should not exceed 15 feet per minute.[22]

In order to dissipate energy readily, clarifier inlets are normally equipped with baffles or small ports. Inlet ports should be sized for

velocities in the range of 15 to 30 fpm. Baffles should extend from a point several inches below the water surface to a point 6-12 inches below the inlet point.[22]

Density Currents--

Short-circuiting can occur in sedimentation basins if the incoming flow has a higher temperature or density than the mass of liquid in the basin. This condition is usually evidenced by violent rolling of masses of liquid with entrained solids to the surface. Short-circuiting can occur when the temperature suddenly increases 1 to 2°C with light flocculant-type solids.[22]

Temperature increases can be especially significant during start-ups. Control over density currents is achieved by limiting the temperature change to 1-2°C over a period of at least an hour. One method for eliminating temperature gradients in the sedimentation basin is to recycle the clarifier underflow back to the treatment processes.[22]

Outlet Design--

The overflow or effluent takeoff weir should be designed and operated such that the clarifier liquid can be removed from the basin without causing localized high velocity up-drafts. These updrafts cause previously settled solids to be carried over the weir. For this reason most sedimentation basins have a sidewater depth between 8 and 12 feet.

In order to eliminate short circuiting caused by localized velocity up-drafts, a multiplicity of weirs is recommended. The Ten States Standards suggested a limit of 15,000 gpd/ft^2 for secondary settling basins.[23]

Tank Depth--

The depth of a tank will affect performance by affecting particle contact. Since settling of flocculant particles is affected by tank depth, a greater tank depth will produce higher removal efficiencies.

TYPICAL PERFORMANCE VALUES

Sedimentation of flocculant particles from metal finishing wastewater treatment should result in suspended solids concentrations less than 50 mg/L.

TROUBLESHOOTING GUIDE

The troubleshooting table for the sedimentation process is presented in Table 15. Several types of problems are addressed; these include high sludge blanket, high solids concentration in the effluent, flow short-circuiting, mechanical torque problems in the equipment, deflocculation in the clarifier, and high metals concentration in the effluent. Many of the potential solutions involve correction of mechanical problems.

TABLE 15
SEDIMENTATION TROUBLESHOOTING GUIDE

PROBABLE CAUSE	CHECK OR MONITOR	REASON	CORRECTIVE ACTION
OPERATING PROBLEM 1: Sludge blanket overflow weirs.			
1a. Sludge blanket too high.	- Depth of sludge blanket. Operation of sludge pump.	- Sludge not being removed at fast enough rate.	- Increase removal rate of sludge from clarifier.
OPERATING PROBLEM 2: Sludge blanket too high. Sludge removal pumps operating properly.			
2a. Defective scraper blades on bottom sludge scrapers.	- Bottom sludge scraper blade.	- Scraper blade out of adjustment or broken. Sludge not being moved to clarifier hopper.	- Drain clarifier and adjust or repair scraper blade.
OPERATING PROBLEM 3: Excessive torque on rake mechanism.			
3a. Sludge blanket too high. Sludge concentration too high.	- Depth of blanket and sludge concentration.	- Thick sludge can cause torque overload.	- Increase removal rate of sludge. Blanket depth will have to be decreased rapidly to prevent damage to clarifier.
3b. Foreign object in clarifier.	- Bottom of clarifier for foreign objects.	- Foreign object can wedge scraper and cause torque.	- Drain clarifier and remove object.
3c. Bottom sludge scraper out of adjustment.	- Bottom scraper arm adjustment.	- Scraper blades touching bottom causing torque overload.	- Drain clarifier and readjust bottom scaper arm and/or blades.
3d. Top skimmer out of adjustment.	- Top skimmer.	- Skimmer could be rubbing side walls of clarifier or could have dropped causing excessive torque as skimmer passes over skimmings hopper.	- Adjust blade on end of skimmer arm. - Adjust baffle of clarifier if out of round. - Readjust position of top skimmer.
3e. Mechanical problems.	- Gear box, bearings, motor.	- Excessive drag due to mechanical problems can cause torque problems.	- Replace or repair defective part.

TABLE 15
(Continued)
SEDIMENTATION TROUBLESHOOTING GUIDE

PROBABLE CAUSE	CHECK OR MONITOR	REASON	CORRECTIVE ACTION
OPERATING PROBLEM 4: High TSS concentration in clarifier effluent.			
4a. Sludge blanket too high.	- See Steps 1 and 2.	- See Steps 1 and 2.	- See Steps 1 and 2.
4b. Influent flow too high.	- Flow rate to clarifier.	- Excessive flow rates will cause solids carryover.	- Reduce flow rate.
4c. Chemical dosage wrong.	- Chemical dosage.	- Low or high chemical dosage can cause solids carryover.	- Run jar test. Readjust dosage.
4d. Sludge hopper on clarifier for floating solids plugged.	- Exit lines of sludge hopper.	- Plugged hopper will cause increased concentration of floating solids. Solids will overflow weir.	- Unplug hopper.
4e. Poor mixing of wastewater and chemicals.	- Chemical injection point.	- Point of entry of chemicals is critical to proper mixing.	- Inject chmicals at proper point.
	- Turbine drive on reactor clarifiers.	- Drive may be too fast or too slow.	- Readjust speed of turbine drive.
4f. Short circuiting of clarifier flow.	- Level of clarifier weirs.	- Uneven weirs causes short circuiting.	- Level weirs.
4g. Solids concentration to clarifier too high.	- Partial blocking of V notch weirs.	- Partial blocking can cause short circuiting.	- Clean weirs.
	- Solids concentration.	- Exceeding solids loading rate will cause solids carryover.	- Decrease solids loading.
OPERATING PROBLEM 5: Short-circuiting of clarifier flows.			
5a. Uneven weirs.	- See Step 4f.	- See Step 4f.	- See Step 4f.
5b. Plugged weirs	- See Step 4f.	- See Step 4f.	- See Step 4f.

TABLE 15
(Continued)
SEDIMENTATION TROUBLESHOOTING GUIDE

PROBABLE CAUSE	CHECK OR MONITOR	REASON	CORRECTIVE ACTION
5c. Excessive hydraulic load.	- Flow rate to clarifier.	- High flow rate will cause short circuiting.	- Reduce flow rate or place additional units in service.
5d. Temperature difference between influent flow and clarifier water.	- Water temperatures.	- Temperature differences can cause short circuiting.	- Reduce hydraulic load.
OPERATING PROBLEM 6: Deflocculation in clarifier.			
6a. Excessive shear.	- Injection point and agitation.	- Excessive mixing or excessive turbulence can cause shear.	- Reduce mixing or agitation.
OPERATING PROBLEM 7: High concentration of metals in effluent.			
7a. Improper treatment prior to sedimentation.	- pH adjustment and metal precipitation.	- Improper chemical treatment will cause metals to remain in solution.	- Correct pH steps. (See pH Adjustment Troubleshooting Guide and Metal Precipitation Troubleshooting Guide.)
7b. Incorrect polymer dosage in clarifier.	- Polymer dosage.	- High or low polymer dosage can allow solids carryover.	- Run jar test and readjust polymer dosage. See Flocculation Troubleshooting Guide.
7c. Sludge blanket too high.	- See Steps 1 and 2.	- See Steps 1 and 2.	- See Steps 1 and 2.
7d. Short circuiting of clarifier flows.	- See Step 5.	- See Step 5.	- See Step 5.
7e. See Step 4.	- See Step 4.	- See Step 4.	- See Step 4.

SECTION 12

FILTRATION

INTRODUCTION

Filtration is a separation process used to remove suspended solids generated by precipitation and other suspended solids present in the wastewater. Generally, filtration is used after clarification to further reduce the suspended solids concentration in the final effluent, thus enabling the treatment system to meet more stringent effluent requirements or to permit the treated wastewater to be recycled. Additionally, filters are sometimes used in treatment systems in which space is severely limited as the sole suspended solids removal process.

In the filtration process, wastewater is passed through a bed of porous material which separates the solids from the wastewater. Depending upon the nature of the filter, one of two different separation processes predominate. In deep granular filters the solids are removed through an adsorption/disposition process as the wastewater passes through a deep bed of granular material. In pre-coat and cartridge filters the solids are removed through a mechanical straining process as the wastewater passes through a thin layer of filter media.

THEORY OF OPERATION

Filtration involves the passage of water through porous media with a resulting removal of suspended solids. A number of mechanisms, some chemical and some physical, are involved in the solids removal process. The predominant mechanisms are straining, disposition, and adsorption.

The dominant mechanism for a given filter depends upon the physical and chemical characteristics of the wastewater and the filter.

Straining involves removal of particles either at the filter surface or within the interstices of the filter media and is affected by the filter media and particle size and the filtration rate. For both precoat filters and cartridge filters, the predominant removal mechanism is assumed to be straining which occurs at the surface of the filter media. Although straining also occurs to a limited degree in deep granular filters, primarily within the interstices of the media, its importance is generally minimized during design because it leads to rapid buildup of head loss which limits the length of filter runs.

Disposition and adsorption within the filter bed are the predominant solids removal processes in deep granular filters. Disposition involves gravitational settling, diffusion, and interception and is affected by the physical characteristics and size of the media, the filtration rate, the fluid temperature, and the size and density of the suspended solids. Adsorption relies upon the attachment of the suspended solids particles to the filter media. The amount of surface available for adsorption is enormous, roughly 3,000 to 5,000 square feet per cubic foot of media. Adsorption relies upon attachment and is affected by use of coagulants, the characteristics of the wastewater (especially particle size), shear strength and driving force, adhesiveness of the suspended solids floc, and the characteristics of the filter media.

DESCRIPTION OF EQUIPMENT

Filtration processes vary in the type of equipment used, the manner that the driving force is applied to the filter, and the method of backwashing.

Types of Filters

The four most common types of filtration equipment used for treatment of metal wastes are granular deep-bed filters, diatomaceous earth filters, cartridge filters, and pressure filters. Deep bed filters consist of a basin or tank with an 18 to 30 inch layer of sand or other fine granular material supported by an underdrain system and operated under either a gravity head or pressure head. Deep granular filters are generally applicable for the removal of suspended solids in the 5-50 mg/L range, but can handle suspended solids concentrations up to 1000 mg/L and provide about a 90 percent solids removal.

Pre-coat filters consist of a number of porous septa supporting a thin layer of filter media. The filter medium is generally diatomaceous earth and pre-coat filters generally operate under a pressure head. Pre-coat filters can handle high suspended solids concentrations provided solids concentrations remain constant. Precoat filters can provide up to 98 percent solids removal.

The use of cartridge filters for wastewater treatment is limited to effluent polishing prior to wastewater recycling. Cartridge filters consist of cartridges of porous material that are enclosed in a housing and operated under a pressure head. Cartridge filters are limited to wastewaters with low suspended solids concentrations, but, depending upon the pore size of the filter cartridge, can provide essentially complete removal of suspended solids.

Pressure filters are also generally used for effluent polishing after clarification. Pressure filters consist of sand media enclosed in a housing and operated under a pressure head. Pressure filters can be operated under a constant head or variable head. A variable head is used often to achieve a constant flowrate.

Driving Force

There are three basic filter operating methods, and they differ in the way that the driving force is applied across the filter. These methods are referred to as constant-pressure filtration, constant-rate filtration, and declining rate filtration. For constant-pressure filtration a constant driving force is applied across the filter for the entire filter run. Because filter resistance is lowest at the start, the flow rate is at its peak. As solids are captured, filter resistance increases and the rate of flow decreases. This operating method is seldom used because a large flow equalization basin is required to deal with the change in flow during the filter run.

In constant-rate filtration a constant pressure is applied to the filter, but filter resistance is modulated through control of the flow rate using a flow control valve. At the start of the filter run the flow control valve is nearly closed, then as solids accumulate, the flow control valve is opened to compensate for the increase in filter resistance. While storage capacity is minimized the initial and operating costs for the rate controller are high and water quality is lower than with declining rate filtration. The constant rate system is also wasteful of available head because excess head is lost in the controller. Additionally the control valve may set up high frequency surges in the filter bed.

Declining-rate filtration utilizes a bank of filters to moderate the effect of increases in filter resistance. As the filters served by a common header become dirty, the flow through the dirtiest filter drops rapidly, increasing the driving force so that the other filters can handle additional flow from the dirtiest filter. This method provides a more gradual decrease in the rate of flow over the filter cycle and provides a better effluent quality than with constant rate operation. As with constant pressure filtration, a large upstream water storage is needed.

Backwashing

Once filter resistance exceeds the available driving force the accumulated solids must be removed from the filter. In cartridge filters this process requires dismantling of the filter housing and replacement of the filter cartridges. For precoat filters the filter layer is removed from the system by scraping the septa manually or by washing either directly or by a reverse flow. For deep granular filters and pressure filters, the media are washed and returned to service.

Backwashing of deep granular filters involves reversing the flow through the filter at a rate sufficient to expand the filter bed. The deposited material is then dislodged by hydraulic shearing action of the water and abrasion of the grains of filter media. Where cleaning is inadequate, mud balls, masses of filtered solids, develop and over time will grow and sink deeper into the filter bed, increasing head loss and decreasing effluent quality. Where backwash rates are inadequate to thoroughly clean the filter, longer duration backwashes must be used (5 to 10 or at an extreme, 15 minutes) to provide the necessary cleaning. Air scour is often used to assist in backwashing. Deep bed filters can either be backwashed continuously or intermittently.

OPERATIONAL PROCEDURES

The objective of wastewater filtration is to achieve a high capture of suspended solids and to minimize operating and power requirements without constraining wastewater flow. To achieve this objective, the operator should know how to perform the necessary calculations, perform the required process monitoring, and understand the process control variables or strategies.

Process Monitoring

To maintain the desired level of filtration performance, usually measured by effluent suspended solids or metal concentration, the operator should perform the necessary monitoring and understand how the

various parameters can be used to diagnose problems. The monitoring required to troubleshoot the filtration process is listed in Table 16. Included in this table are the frequency of analysis and the reason for monitoring the parameter.

The operation performance of the filtration process is defined by the influent and effluent suspended solids, metal concentration or turbidity, and the filtration rate. As a filter run progresses, the captured solids increase the filter resistance and thus either increase the head loss through the bed or decrease the flowrate through the bed. Decreasing the flowrate through the bed will reduce the filtration capacity of the bed. By operating at higher system pressures the rate of flow can be maintained, but with metal hydroxide flocs there is considerable penetration into the filter and breakthrough can occur at relatively low heads. While run lengths can be shortened to maintain a higher rate of flow, the effects of downtime and backwashing become increasingly important. Thus, filter operation focus is on obtaining the longest possible filter cycle that is consistent with minimal solids breakthrough, practical system head losses, and acceptable filtration rates. Floc breakage at higher pressures can be partially compensated for by use of alum or polyelectrolytes to condition the floc prior to filtration.

Example Calculations

The calculation used most often to troubleshoot the filtration process is the filtration rate. The mathematical formula for filtration rate is

$$\text{Filtration rate (gpm/ft}^2\text{)} = \frac{\text{Flow rate (gpm)}}{\text{Surface area of filter (ft}^2\text{)}}$$

Consider the following example calculation. Determine the filtration rate for a system which has two filters and each filter has a 5-foot diameter. The flow rate is 60 gpm.

TABLE 16

FILTRATION
PROCESS MONITORING REQUIREMENTS

	Parameter	Frequency	Comment
1.	Influent flow	Continuously	- To determine filtration rate.
2.	Influent TSS	Weekly	- To determine mass loading to filters.
			- To troubleshoot low filter run problem.
3.	Effluent TSS	Daily	- To determine filter performance.
			- To determine whether to backwash filters.
4.	Headloss	Continuously	- To determine when to backwash filter.
5.	Filter run time	Each run	- To identify short run periods.
6.	Backwash flowrate	Continuously	- To optimize backwash flowrate and duration.
7.	Filter aid (type and dosage)	Daily	- To optimize type and dosage.
8.	Influent and effluent metal concentration	Regularly	- To determine performance.

$$\text{Filtration rate} = \frac{60}{2 \times (\ \ \times 5^2)/4}$$

$$\text{Filtration rate} = 1.53\ \text{gpm/ft}^2$$

The recommended filtration rates for granular filters are shown below.

Type	Filtration
Slow Sand	0.050 - 0.130 gpm/ft^2
Rapid Sand	1.00 - 1.26 gpm/ft^2
High Rate Mixed Media	2.00 - 3.00 gpm/ft^2

Higher filtration rates can be obtained with cartridge filters or pressure filters. Generally these filters are limited by a maximum pressure drop across the filter of 60 psi.

While most systems are designed to operate at the correct filtration rate, problems can occur when one or more filtration units are out of service due to backwashing, replacement of media, or broken equipment.

Process Control Strategies

Filter operation is generally automatic and requires limited operator control. Possible process variables are thus limited to filter run time, length and duration of backwash, and chemical conditioning of the influent wastewater.

Filter Run Time--

The length of the filter run is generally determined by the time required to reach a predetermined head loss or is set at a predetermined length of time. Head loss control is the most commonly used because it minimizes backwashing or filter renewal. Increasing the final head loss point allows longer filter runs but results in lower filter rates and

possible solids breakthrough. The head loss point setting is also limited by the maximum available system pressure.

Length and Duration of Backwash--

Effective cleaning of the filter media in deep granular filters is very important to successful plant operation. If the bed is not cleaned well, solids can accumulate, leading to bed cracking and the formation of mud balls. Because all filter backwashing water must be returned for treatment excess backwashing should be avoided. The actual requirements for backwashing will vary depending upon the nature of the wastewater and filter aids being used.

Chemical Conditioning of Influent--

Filter performance can be improved by adding filter aids such as polymer and/or alum. These act to strengthen the floc, control penetration of the floc into the filter bed, and improve solids capture on precoat filters. As a result final solids are reduced and allowable flow rate can be increased.

The amount of filter aid required varies with influent wastewater characteristics and should be determined through testing. The optimum dose should be based upon desired filter rate at the end of the filter run.

TYPICAL PERFORMANCE VALUES

The performance of the filtration process can be measured by the suspended solids level of the liquid effluent from the filtration process. A well-operated filtration process produces an effluent with low-suspended solids concentrations; removal efficiences of 90 to 99 percent are common.

TROUBLESHOOTING GUIDE

The guide shown in Table 17 should be used to troubleshoot the filtration process. The table has been divided into three sections to

TABLE 17
FILTRATION TROUBLESHOOTING GUIDE
(PRESSURE FILTERS-SAND)

PROBABLE CAUSE	CHECK OR MONITOR	REASON	CORRECTIVE ACTION
OPERATING PROBLEM 1: High headloss through filter bed.			
1a. Filter clogged with solids.	- Headloss through filter.	- High headloss will indicate that solids are clogging filter and filter requires back-washing.	- Remove filter from service and backwash.
	- Duration of filter run.	- Duration of filter run as compared to other filter runs will indicate if other problems exist.	- If filter run is high compared to others, then refer to 3a, 3e, and 3f.
	- Solids concentration and flow rates to filter.	- Solids concentration and flow rates will indicate if unusual conditions exist in plant that will shorten run time of filters.	- Reduce solids concentration (see Clarification Trouble-shooting Guide) or reduce flow-rate.
OPERATING PROBLEM 2: High headloss through filter just backwashed.			
2a. Insufficient backwash of filter.	- Backwash flow rate.	- Insufficient rate of back-wash water will not allow solids to be removed from filter.	- Increase backwash flow rate to desired value.
	- Backwash pump. Check impeller clearance. Check for partial blockage of impeller.	- Defective pump is often the cause of loss of flow rate.	- If pump is defective, it will have to be dismantled and repaired.
	- Backwash flow valve.	- Defective flow valve can cause loss of flow.	- Defective flow control valves will have to be dismantled and repaired.
	- Plugging in bottom spargers of filters.	- Plugged spargers can restrict backwash flow into filters.	- Plugged spargers can sometimes be cleared by prolonged backwashing. If this fails, the spargers must be removed and manually cleaned or replaced.

TABLE 17
(Continued)
FILTRATION TROUBLESHOOTING GUIDE
(PRESSURE FILTERS-SAND)

PROBABLE CAUSE	CHECK OR MONITOR	REASON	CORRECTIVE ACTION
	- Defective valves in backwash system.	- Defective valves could restrict backwash flow into filters.	- Check valves for open and closed position. Valves that are not functioning properly will have to be dismantled and repaired.
	- Instrument air pressure to backwash control system.	- Insufficient instrument air pressure to backwash controls or valves can limit the operation of the system.	- Reset individual pressure regulators to proper setting.
	- Suction piping of pumps or screens inside backwash water supply tank.	- A blockage of suction piping or dirty suction screens can cause a loss of backwash flow rates.	- Backflush suction lines of pump. Remove and clean suction screens.
	- Duration of backwash.	- Complete backwash requires specified flow rate for a specified period of time.	- Increase backwash time. Defective timers may have to be replaced.
	- Filter skipping backwash cycle.	- If filter is completely automated a defective circuit can cause the filter to skip the backwash cycle.	- Visually observe a complete filter cycle. Have defective circuits repaired. Backwash cells manually.

TABLE 17
(Continued)
FILTRATION TROUBLESHOOTING GUIDE
(GRANULAR DEEP BED FILTERS)

PROBABLE CAUSE	CHECK OR MONITOR	REASON	CORRECTIVE ACTION
OPERATING PROBLEM 1: High headloss through filter bed.			
1a. Filter needs backwashing.	- Headloss through filter.	- High headloss will indicate solids accumulating in filter and filter requires backwashing.	- Remove filter from service and backwash it.
OPERATING PROBLEM 2: High headloss through a filter just backwashed.			
2a. Insufficient backwash time to thoroughly clean the filter media.	- Headloss greater than normal and influent suspended solids.	- High initial headloss (1 - 2 ft) even with low suspended solids concentration will cause short filter runs.	- Increase the setting on the backwash timer to provide longer backwash period.
2b. Inoperative surface wash arm (if applicable).	- Visually inspect surface wash arm.	- Surface wash arm must turn freely.	- Repair suface wash arm.
2c. Inoperable air scouring system (if applicable).	- Inspect pressure setting and aeration pattern.	- Pressure setting could be too high or low and air ports could be plugged.	- Adjust pressure to correct setting. - Unplug air ports.
2d. Rapid accumulation of solids on the top surface of the media due to:			
i) Inadequate prior clarification for sand filters.	- Measure influent TSS concentration.	- High TSS concentration will reduce filter run time.	- Improve clarification performance.
ii) Excessive filter aid dosages in dual or mixed-media filters.	- Evaluate filter aid dosage and type.	- Filter aid dosage and type will affect rate of headloss build-up.	- Reduce or eliminate filter aid dosage.

TABLE 17
(Continued)
FILTRATION TROUBLESHOOTING GUIDE
(GRANULAR DEEP BED FILTERS)

PROBABLE CAUSE	CHECK OR MONITOR	REASON	CORRECTIVE ACTION
OPERATING PROBLEM 3: Short filter runs.			
3a. See Item 2d.	- See Item 2d.	- See Item 2d.	- See Item 2d.
3b. Insufficient filter backwash.	- Check backwash rate and duration.	- Low backwash or short backwash duration can reduce filter runs.	- See Item 2a.
	- Check air scour or surface wash (if applicable).	- Insufficient air scour or inoperable air wash can reduce filter runs.	- See Items 2b and 2c.
OPERATING PROBLEM 4: Filter effluent turbidity increases suddenly but filter headloss is low.			
4a. Inadequate dosage of polymers as filter aid.	- Run jar tests.	- Jar tests will indicate needed dosage of polymer.	- Adjust polymer dosage.
4b. Coagulant feed system malfunction.	- Check chemical feeders.	- Excessive turbidity can be caused by chemical feeder malfunction.	- Repair feeders.
4c. Change in influent characteristics.	- Check pH adjustment and clarification.	- Change in pH can change solubility and increase turbidity.	- See pH Adjustment Trouble-shooting Guide and Sedimentation Trouble-shooting Guide.
OPERATING PROBLEM 5: Mud ball formation.			
5a. Inadequate backwash or surface wash.	- Check backwash flowrate and duration.	- Backwash flowrate and duration may be too low.	- Provide backwash flow rate up to 20 gpm/sq.ft., and maintain proper auxiliary scour (surface wash).
5b. Media needs replacing.	- Look for cementaceous media.	- Cementaceous media will reduce filter run time.	- Replace media.

TABLE 17
(Continued)
FILTRATION TROUBLESHOOTING GUIDE
(GRANULAR DEEP BED FILTERS)

PROBABLE CAUSE	CHECK OR MONITOR	REASON	CORRECTIVE ACTION
OPERATING PROBLEM 6: Loss of media during backwashing.			
6a. Excessive flows used for backwashing.	- Check backwash rate.	- High backwash can cause solids carryover.	- Reduce rate of backwash flow.
6b. Auxiliary scour excessive.	- Check backwash program.	- Excessive air scour can cause solids carryover.	- Cut off the auxiliary scour 2 min. before the end of the main backwash.
6c. Air bubbles attaching to anthracite causing it to float.	- Check for floating anthracite.	- Loss of anthracite can reduce effectiveness of filter system.	- Reduce air scour.

TABLE 17
(Continued)
FILTRATION TROUBLESHOOTING GUIDE
(PRESSURE FILTERS-CARTRIDGE)

PROBABLE CAUSE	CHECK OR MONITOR	REASON	CORRECTIVE ACTION
OPERATING PROBLEM 1: High differential pressure across filter.			
1a. Cartridge plugged with solids.	- Filter cartridge.	- Plugged cartridge.	- Replace cartridge.
OPERATING PROBLEM 2: New cartridge but solids breaking through. Low differential pressure.			
2a. Defective "O" ring or cartridge seal.	- Cartridge seal.	- Solids could be bypassing cartridge.	- Replace seal.
2b. Hole in cartridge.	- Cartridge.	- Solids passing through hole.	- Replace cartridge.
OPERATING PROBLEM 3: Low differential pressure-solids passing through cartridge - no holes in cartridge - seals not defective.			
3a. Wrong cartridge.	- Cartridge type.	- Particles too small for cartridge.	- Change cartridge type.

represent the different types of filtration equipment. Each type of equipment is subject to its own kind of operating problems; most problems have to do with high head loss, short cycle times, backwashing problems, or inadequate solids capture.

SECTION 13

GRAVITY THICKENING

INTRODUCTION

Gravity thickening is a commonly used process for removing water from sludges generated during wastewater treatment, thereby concentrating them prior to dewatering or disposal. Sludges are thickened primarily to decrease the capital and operating costs of subsequent sludge processing steps by substantially reducing the volume. As shown in Figure 23, thickening from one to two percent solids concentration, for example, decreases the sludge volume by fifty percent. Further concentration to five percent solids reduces the volume to one-fifth of its original volume.

In plants in which thickening is the final treatment before sludge disposal, good operation of the gravity thickener can minimize final disposal costs by reducing the volume of sludge to be disposed. The degree of thickening can also affect the performance of downstream processes, particularly dewatering, since the efficiency of process equipment is often related to the concentration of solids in the feed sludge.

THEORY OF OPERATION

Gravity thickeners work on the principle that sludge solids are more dense than water and, under quiescent conditions, will settle and become concentrated over a period of time. As the sludge settles, it forms an interface with the clear water above. In a thickener the solids layer below this interface is referred to as the sludge blanket.

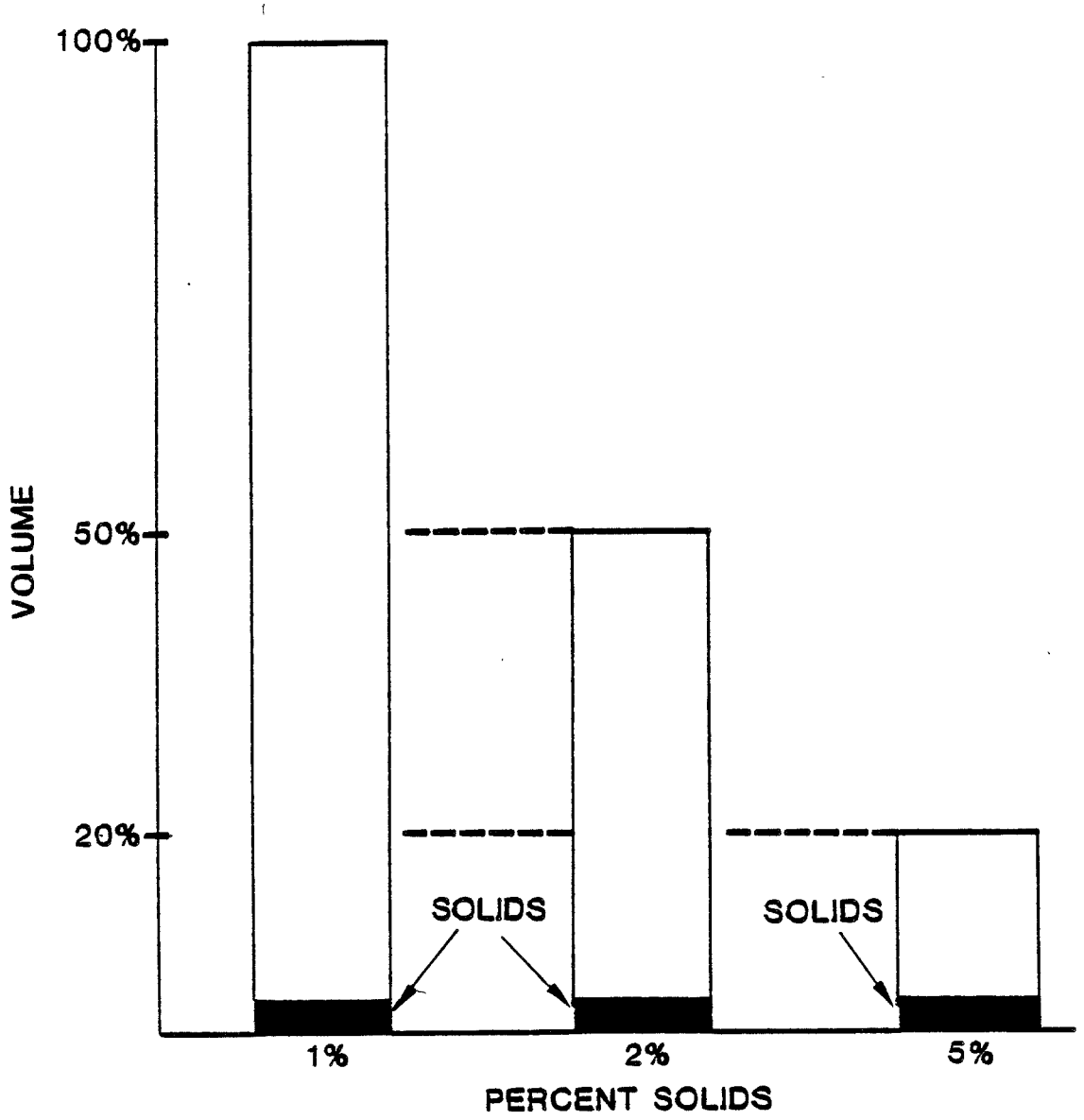

Figure 23. **Effect of gravity thickening upon solids concentration.**

Thickening, concentration, or compaction takes place in the sludge blanket as a result of compression caused by the weight of solids above and by the release of entrapped water. As the sludge becomes more concentrated, the interface moves downward. With time, the interface moves more and more slowly since it becomes progressively more difficult to compact solids and release water entrapped in the sludge. This process is illustrated in Figure 24.

Sludge is removed by pumping from the bottom of the thickener once the desired concentration has been achieved. The supernatant, or clear liquid, is usually sent back to an upstream treatment process since it is rarely of good enough quality to be discharged directly.

Often it is necessary to add chemical coagulants or settling aids to the sludge to improve its thickening characteristics and to maintain a clear supernatant. Polyelectrolytes are most commonly used for conditioning, although chemicals such as lime, alum, and ferric chloride are also used. The choices of conditioning agent(s) and optimum dosage rates are made experimentally in jar tests and through operating experience.

All gravity thickeners operate in one of two ways: either as a batch process or as a continuous process. In batch thickeners, sludge is pumped into the thickener and then sufficient time is provided for settling. Once the desired concentration is achieved, based upon either the sludge blanket (interface) level or the amount of time elapsed since batch thickening began, clear water is decanted off the top until only the sludge blanket remains. The sludge is then pumped to the next treatment process or to final disposal, making the thickener available for a new batch of sludge.

Continous thickeners operate much like clarifiers. Sludge enters at mid-depth, usually in a center well, and is removed by pumping from a hopper or collection box at the bottom. Sludge removal can be either continuous or intermittent with sludge pumps operating on a timed cycle. The latter mode of operation is more common. The supernatant or clear

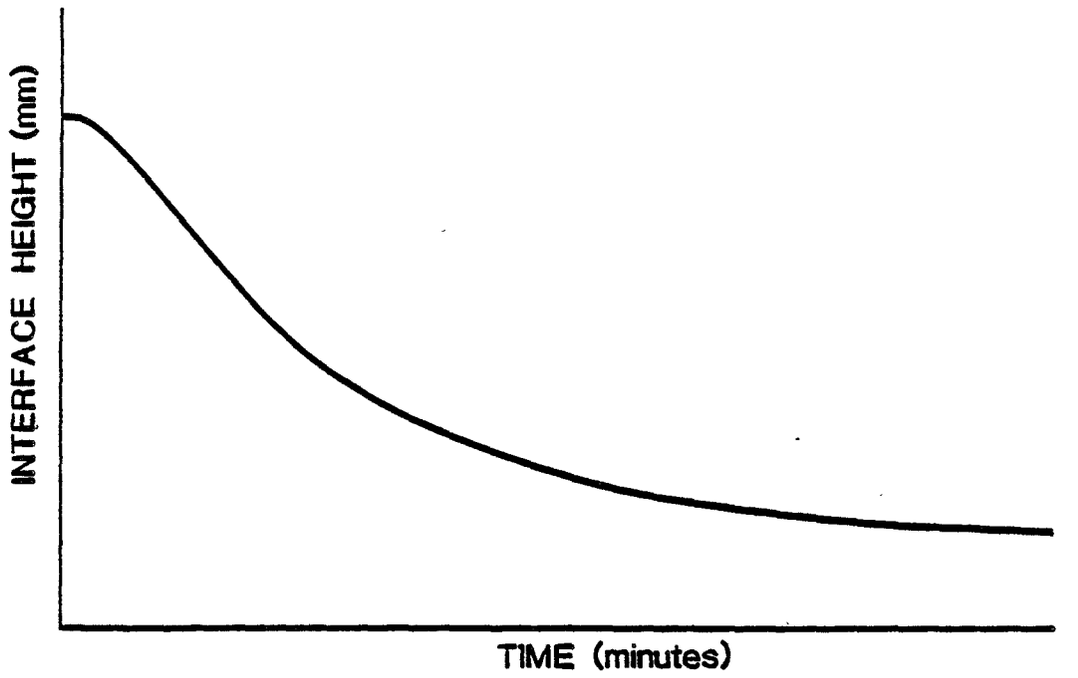

Figure 24. **Typical curve of effect of time on sludge compaction.**

liquid effluent continuously passes over weirs at the top of the thickener. The most basic difference between the two types of thickeners is in formation and behavior of the sludge blanket.

The concentration of solids within a continuously operated thickener is shown in Figure 25. There are three very distinct zones which develop in such a thickener. The clear zone on top is composed of liquid that eventually becomes the effluent or supernatant escaping over the weirs. This liquid has a very low solids concentration. The next zone is called the sedimentation zone; it is characterized by a fairly uniform solids concentration. Below the sedimentation zone is the thickening or compaction zone, characterized by an increasing solids concentration to the point of sludge discharge.

The sludge blanket in a continuous thickener is defined as beginning at the top of the sedimentation zone. Looking into an operating thickener, one can often see the sludge blanket below the clear effluent. The sludge blanket depth is the main operational control that a treatment plant operator has over a thickener. The blanket can be lowered by increasing the underflow sludge pumping rate (or reducing the cycle time on intermittent pumping systems) and blanket depth can be increased by decreasing the underflow rate.

DESCRIPTION OF EQUIPMENT

Most gravity thickeners are circular tanks, either concrete or steel, with sloped bottoms to help in moving the thickened sludge to a hopper or collection box from which it is removed by pumping. Sludge pumping is either continuous or on an intermittent cycle, depending upon the size of the unit. A rotating rake-arm equipped with scrapers is usually provided to push the sludge toward the center and into the hopper. Sometimes pickets are attached to the rake arm to gently agitate the thickened sludge and help release water entrapped in the sludge. Sludge enters the clarifier in a localized area that is enclosed by baffles to help maintain the quiescent conditions required for thickening. Relatively clear effluent passes over weirs at the top

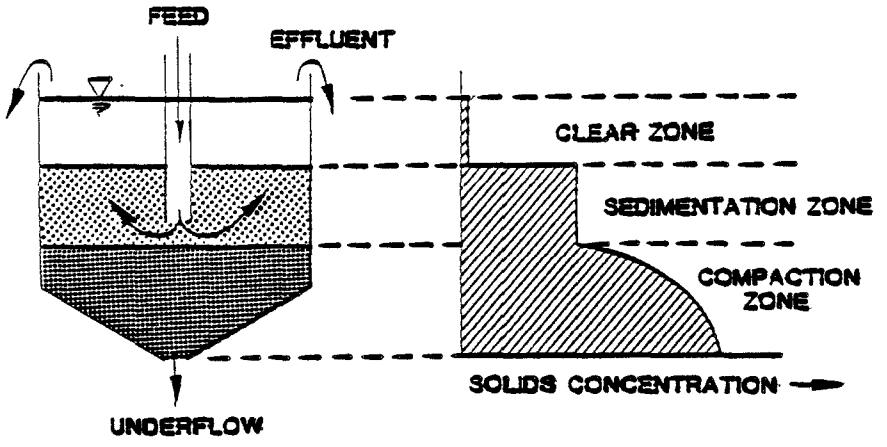

Figure 25. **Liquid zones in a continuously operated thickener.**

and usually is recycled back to a preceding treatment process. Some continuous thickeners are rectangular or even square basins, in which case they generally have moving flights to push sludge toward one end where it falls into a hopper or collection box and is removed by pumping.

Batch thickeners are similar to continuous thickeners except that they lack influent baffles and effluent weirs. Since sludge is added batchwise rather than continuously, influent baffles are not necessary in batch thickeners. Likewise, effluent weirs are not needed. Batch thickeners also have sloped bottoms and a rotating arm equipped with pickets and scrapers to help compact the sludge. The thickened sludge is pumped directly out of the bottom after the supernatant is decanted.

OPERATIONAL PROCEDURES

The main objective in operating thickeners is to provide the thickest possible sludge without upsetting the quality of the supernatant. This objective usually is accomplished by providing the maximum time possible for thickening to occur, or in other words, the longest possible solids residence time. In batch thickeners, one controls the settling time for each batch, taking into account the number of batches that must be thickened in a given period of time.

In continuous thickeners, control of the time available for thickening is usually achieved by adjusting the underflow pumping rate or cycle time to maintain a constant sludge blanket depth. Alternatively, the underflow rate can be controlled to maintain a constant solids concentration in the thickened sludge, which indirectly determines the average solids residence time within the thickener.

Process Monitoring

The main parameter used in evaluating thickener performance is the solids concentration in the thickened sludge.

Continuous gravity thickeners are usually designed to meet two conditions - maximum hydraulic overflow rate and a maximum solids loading. The overflow rate is generally expressed as a surface loading rate with units of gallons per day per square foot of thickener surface area ($gal/ft^2/day$). A maximum overflow rate is established to insure that adequate residence time is provided for a sludge blanket to form and for solids separation or clarification to occur. Otherwise, the supernatant would contain an unacceptably high solids concentration. The maximum solids loading rate is determined by how well the sludge compacts, and is established to insure adequate time for solids thickening or compaction to occur in the sludge blanket layer. The solids loading is also expressed as a surface loading, with units of pounds of solids per square foot of surface per day ($lb/ft^2/day$).

The operation of gravity thickeners is fairly simple, provided the operator has sufficient data to allow a determination of the cause of problems when they occur. Even small changes in sludge characteristics, temperature, pH, flow rates, or other factors can reduce thickener performance. To determine the cause of a problem, a complete record of operating data is necessary. With such information, the operator can compare periods of good and poor thickener performance and easily identify changes in operating conditions which may be causing poor thickening. The data which should be monitored routinely are presented in Table 18.

In addition to the data collected above, several calculated parameters can be used to characterize and monitor thickener performance. Among these are sludge volume ratio, solids loading rate, surface overflow rate, and sludge wasting rate.

The sludge volume ratio (SVR) is an estimate of the average solids residence time or thickening time provided in a continuous thickener. It is calculated by dividing the sludge blanket volume by the underflow pumping rate and is usually expressed in units of hours or days.

TABLE 18

GRAVITY THICKENING
PROCESS MONITORING REQUIREMENTS

Parameter	Frequency	Comment
1. Influent suspended solids concentration (mg/L).	Daily	To determine solids loading and removal efficiency.
2. Underflow suspended solids concentration (mg/L).	Daily	To calculate solids loading to downstream treatment processes.
3. Sludge blanket depth (ft or meters).	Daily	To determine whether sludge is accumulating in clarifier.
4. Effluent or supernatant suspended solids concentration (mg/L).	Daily	To determine removal efficiency.
5. Chemical dosage rate (ppm or mg/L).	Daily	To adjust/optimize chemical dosage as necessary.
6. Influent flow rate (m^3/min or gpd).	Continuously	To calculate solids loading.
7. Underflow pumping rate (gpm or m^3/min).	Daily	To determine sludge loading to downstream treatment processes.

The solids loading rate is the mass of suspended solids applied to the thickener each day divided by the thickener surface area. It has the units of $lb/ft^2/day$ or $kg/m^2/day$.

The surface overflow rate is the total volume of water passing over the effluent weirs in a day divided by the thickener surface area. It is expressed in units of $gal/ft^2/day$ or $L/m^2/day$.

The sludge wasting rate refers to the mass of suspended solids removed in the underflow each day, expressed on a dry weight basis. It is calculated by multiplying the average underflow pumping rate by the underflow suspended solids concentration and has units of lb/day or kg/day.

Example Calculations

The following examples show how the various operating parameters are calculated. Consider a gravity thickener for which the following data have been collected.

(1) Thickener diameter = 20 feet
(2) Average sludge blanket depth = 8 feet
(3) Underflow sludge pumping is intermittent. Pumps are on for 20 minutes every half hour and pump at a rate of 15 gallons per minute.
(4) Influent flow rate = 25 gpm
(5) Influent suspended solids (TSS) concentration = 15,000 mg/L
(6) Average underflow pumping rate = 5 gpm
(7) Underflow suspended solids concentration = 72,000 mg/L

Sludge Volume Ratio--

Thickener Surface Area = $(\text{Diameter}/2)^2(3.14)$ = 314 square feet

Sludge Blanket Volume = (Thickener Surface Area)(Blanket Depth)

= (314 square feet)(8 feet) = 2,512 cubic feet in blanket

Conversion From Cubic Feet to Gallons = 7.48 gallons/cubic foot

(2,512 cubic feet)(7.48) = 18,792 gallons in blanket

Average Underflow Pumping Rate = (Pumping Rate)(Pumping Time)/

(Cycle Time) = (15 gpm)(10 minutes)/(30 minutes) = 5 gpm

SVR = (Sludge Blanket Volume)/(Average Underflow Pumping Rate)

= (18,792 gallons)/(5 gpm) = 3,758 minutes

(3,758 minutes)(1,440 minutes per day) = 2.61 days

Solids Loading Rate--

Thickener Surface Area = $(\text{Diameter}/2)^2(3.14)$ = 314 square feet

Daily Flow = (25 gallons/minute)(1,440 minutes/day) = 36,000 gpd

(36,000 gpd)/(1,000,000) = 0.036 Mgd

Mass of Influent Solids per Day = (Infl. Flow)(Infl. TSS)(8.34)

= (0.036 Mgd)(15,000 mg/L)(8.34) = 4,504 lb solids per day

Solids Loading Rate = (Mass of Influent Solids/Day)/(Thickener

Surface Area) = (4,504 lbs solids per day)/(314 sq ft)

= 14.3 lb/sq ft/day

Surface Overflow Rate--

Daily Effluent Flow = (Influent Flow Rate)-(Average Underflow

Pumping Rate) = (25 gpm) - (5 gpm) = 20 gpm

(20 gpm)(1,440 minutes per day) = 28,800 gpd

Surface Overflow Rate = (Daily Effluent Flow)/(Thickener Surface

Area) = (28,800 gpd)/(314 square feet) = 92 gal/sq ft/day

Sludge Wasting Rate--

Daily Volume of Sludge Underflow = (5 gpm)(1,440) = 7,200 gpd

(7,200 gpd)/(1,000,000) = 0.0072 Mgd

Sludge Wasting Rate = (Daily Underflow Volume)(Underflow Solids

Concentration)(8.34) = (0.0072 Mgd)(72,000 mg/L)(8.34)

= 4,323 lb solids per day

For the influent mass of solids = 4,504 lb/day,

$(4,323)/(4,504) \times 100 = 96.0$ % of solids are in underflow

Process Control Strategies

The simplest type of thickener to operate is a batch thickener since the only operational control is the amount of time provided before decanting off the clear liquid. The optimum time must be determined from operating experience and will depend upon the desired underflow solids concentration and the total amount of sludge that must be thickened in a given period of time with the available equipment.

In a continuous gravity thickener, the depth of the sludge blanket (or position of the sludge-liquid interface) is the main process variable used for control. The sludge blanket can be lowered by increasing the underflow sludge pumping rate (or reducing the cycle time on intermittent pumping systems) and can be raised by decreasing the underflow rate. Lowering the sludge blanket essentially reduces the average solids residence time within the thickener and, as is the case in batch thickeners, this usually results in a lower solids concentration in the underflow. Increasing the sludge blanket depth results in a longer solids residence time which usually results in a higher underflow solids concentration.

One advantage of maintaining a lower sludge blanket is that some extra sludge storage capacity is provided within the thickener for periods of high sludge loadings or for occasions when downstream equipment is being serviced or repaired.

Sometimes thickeners are operated to maintain a minimum sludge volume ratio (SVR). While the SVR is helpful in understanding the operation of a thickener, its use as an operational control parameter is limited unless the underflow solids concentration and other factors are also considered. For example, the SVR could increase while at the same time the underflow solids concentration drops, if the influent solids

concentration decreases or if a problem occurs with the operation of the chemical addition system.

Solids loading and solids wasting rates are useful in several ways. The solids wasted each day should be almost the same as the solids fed to the thickener. If not, one of three things must be happening. Either solids are accumulating in the sludge blanket, solids are being lost from the sludge blanket, or solids are leaving the thickener with the effluent. On a short-term basis, only the last of these possibilities is really to be avoided, since a high solids concentration in the supernatant defeats the purpose of thickening and can cause problems in other treatment processes. Over a longer period of time changes in the sludge blanket can also cause problems. As discussed earlier, there are limits to the range in which the sludge blanket can be maintained without reducing underflow solids concentration too much or increasing solids to the point that underflow pumping becomes difficult.

TYPICAL PERFORMANCE VALUES

Performance of gravity thickeners can vary considerably depending upon design features such as solids loading and surface overflow rates. Another factor affecting performance is the nature of the sludge. Metal hydroxide sludges are lighter and do not thicken as well as lime sludges that are high in calcium carbonate concentration. A gravity thickener is designed to achieve about 95 percent solids capture and will produce a thickened sludge ranging from 4 to 10 percent solids. Sludges much thicker than 10 percent may be achievable, but are often difficult to pump and handle. As a minimum, the thickener should about double the solids concentration of the sludge.

TROUBLESHOOTING GUIDE

The problems which are commonly associated with gravity thickener operation have been summarized in the form of a troubleshooting guide in Table 19. Specific details on pumps, sludge rake drives, and other

TABLE 19
GRAVITY THICKENING TROUBLESHOOTING GUIDE

PROBABLE CAUSE	CHECK OR MONITOR	REASON	CORRECTIVE ACTION
OPERATING PROBLEM 1: Thickened sludge is too thin.			
1a. Underflow pumping rate is too great.	- Blanket depth and pumping rate.	- Low blanket indicates pumping rate is too high, may be confirmed if pumping rate has been increased recently.	- Decrease pumping of thickened sludge to maintain a blanket volume between 1/4 and 1/2 of total thickener volume.
1b. Surface overflow rate is too great in continuous thickener.	- Check for high solids in effluent and increased feed flow rate.	- Increased overflow rate results from higher flows and usually results in greater solids losses in the effluent.	- Reduce flow to thickener if possible to keep a maximum surface overflow rate of 600-800 gpd/ft^2. (See also Items 1e and 3a).
1c. Insufficient time for settling in batch thickeners.	- Check the time allowed for settling against previous data and perform batch settling tests.	- To determine if sufficient time is being provided for settling and if sludge characteristics have changed.	- If necessary and possible, allow more time per batch for settling and thickening to occur.
1d. Short-circuiting of flow through thickener.	- Check for high effluent solids concentrations. Inspect surface of clarifier for evidence of uneven flow and solids discharge. Check level of weirs.	- Short circuiting reduces the time available for settling and results in higher effluent solids.	- Level weirs and repair or adjust influent baffles to eliminate short circuiting.
1e. Improper chemical dosage or wrong chemical being used.	- Check chemical addition system for malfunction and check chemical flow.	- Problem may be equipment malfunction or improper setting. If neither, the dosage or chemical used must be changed.	- Repair, replace, or adjust equipment if this is the problem. Otherwise, perform jar tests to select new chemical and/or dosage rates to be used.
1f. Sludge collection or conveying equipment not functioning properly.	- Check for non-uniform blanket and rat-holing (coning). Check to see that drive is working properly. Use probe to check for broken rake or pickets.	- Sludge may be accumulating elsewhere in thickener than the sludge hopper or broken rakes and pickets may cause water to be entrapped in thickened sludge.	- Repair or replace broken equipment, drain tank if necessary.

TABLE 19
(Continued)
GRAVITY THICKENING TROUBLESHOOTING GUIDE

PROBABLE CAUSE	CHECK OR MONITOR	REASON	CORRECTIVE ACTION
OPERATING PROBLEM 2: Torque overload on sludge collection equipment.			
2a. Heavy accumulation of sludge in bottom of thickener - sludge too thick.	- Check sludge blanket depth and underflow solids concentration.	- Sludge can get too thick to move, especially if blanket is very thick.	- Agitate sludge in front of collection equipment using rod, water jet, or air.
2b. Foreign object jamming equipment.	- Inspect all visible parts for foreign objects. Probe along front of underwater collection equipment.	- To determine the presence and location of foreign objects.	- Remove foreign object. Use grappling hook, if possible, for objects underwater. Drain tank if necessary.
2c. Mechanical problems such as insufficient lubrication.	- Check maintenance records, lubricant reservoirs, and free movement of parts.	- Poor maintenance, such as improper lubrication, can cause friction that increases torque.	- Correct any problems and and revise routine maintenance procedures to to prevent future problems.
OPERATING PROBLEM 3: Plugging of sludge pumps or pipelines.			
3a. Underflow sludge concentration too high due to insufficient pumping.	- Check blanket level and underflow solids concentration.	- Sludge can become too thick to pump.	- Flush out plugged lines with water, making sure all valves are open. If this doesn't work, try 2a above. Increase underflow pumping rate or decrease pump cycle time to reduce blanket level and underflow solids concentration.
OPERATING PROBLEM 4: Poor solids capture.			
4a. Overflow rate too high.	- See Item 1b.	- See Item 1b.	- See Item 1b.
4b. Short circuiting of flow through thickener.	- See Item 1d.	- See Item 1d.	- See Item 1d.

TABLE 19
(Continued)
GRAVITY THICKENING TROUBLESHOOTING GUIDE

PROBABLE CAUSE	CHECK OR MONITOR	REASON	CORRECTIVE ACTION
4c. Improper chemical dosage or wrong chemical.	- See Item 1e.	- See Item 1e.	- See Item 1e.
4d. Excessively high sludge blanket due to insufficient underflow pumping rate.	- Check blanket level and underflow pumping rate.	- A high sludge blanket can cause carryover of solids in effluent.	- Increase underflow pumping to reduce blanket level to half or less of total thickener volume.
OPERATING PROBLEM 5: Changing sludge blanket level at constant underflow pumping rate.			
5a. Changing influent flow rates or solids loadings.	- Influent, effluent, and underflow rates and solids concentrations.	- To isolate the causes of the fluctuations and determine how rapidly they occur.	- If underflow solids concentration and effluent quality are acceptable, do nothing. If either is inadequate, make adjustments in underflow rate to achieve an acceptable average condition or, if possible, even out flow rate to thickener.

equipment can be found in the manufacturer's literature. The two predominant problems considered in Table 19 are inadequate thickening of the sludge and problems with sludge blanket level.

SECTION 14

BELT FILTER PRESSES

INTRODUCTION

The treatment of metal plating wastewater often generates dilute sludges during treatment processes such as metal precipitation. These sludges are difficult to dispose of because of their volume and their liquid nature. It is therefore advantageous to dewater the sludges. Dewatering reduces volume and weight of sludges and allows them to be handled as solids.

A belt filter press is a device for accomplishing sludge dewatering. The process produces a solid cake and a relatively clean water stream called the filtrate. Often belt filter presses used for dewatering are preceded by a gravity thickener or centrifuge to increase the solids concentration of the sludge fed to the filter. This combination helps to maximize the solids content of the cake produced.

THEORY OF OPERATION

Filtration for dewatering is a process whereby solids are separated from a liquid by passing the liquid through a porous medium on which the solids remain, eventually building up to form a cake that is removed for disposal. The formation of a solids cake and the fact that solids are removed primarily on the surface of the medium rather than throughout its depth are two distinguishing features that characterize this type of filtration. Both features are important since the object of dewatering is to maximize the recovery of solids in a concentrated form.

DESCRIPTION OF EQUIPMENT

The belt filtration process includes three basic operational stages: chemical conditioning of the feed slurry, gravity drainage to a nonfluid consistency, and compaction of the previously dewatered sludge. These stages are shown in the simple belt filter press shown in in Figure 26. Although present-day belt presses are more complex, they follow the same principles indicated in Figure 26.

Chemical conditioning is essential for successful and consistent performance of the belt filter press, as for other dewatering processes. As shown in Figure 26, a flocculant (usually an organic polymer) is added to the sludge prior to the sludge being fed to the belt press. Free water then drains from the conditioned sludge in the gravity drainage stage of the press.

Following gravity drainage the sludge enters a contact zone usually consisting of two belts. The sludge is initially gently pressed between the two belts and carried passed a series of rollers with generally decreasing diameters. This stage subjects the sludge to continuously increasing pressure and shear forces. Progressively, more and more water is expelled throughout the roller section to the end where the cake is discharged. A scraper blade is often employed for each belt at the discharge point to remove the cake from the belts.

After scraping the cake from the belts, the belts are subjected to a spray wash to clean any remaining solids from the belt surface. Usually treated wastewater is used as a water source. The spray water is then combined with the filtrate and returned to the influent of the treatment plant.

OPERATIONAL PROCEDURES

The objective of operating a belt filter press is to concentrate sludges into a dry cake suitable for disposal. The filter press also produces a filtrate that must be maintained relatively free of solids.

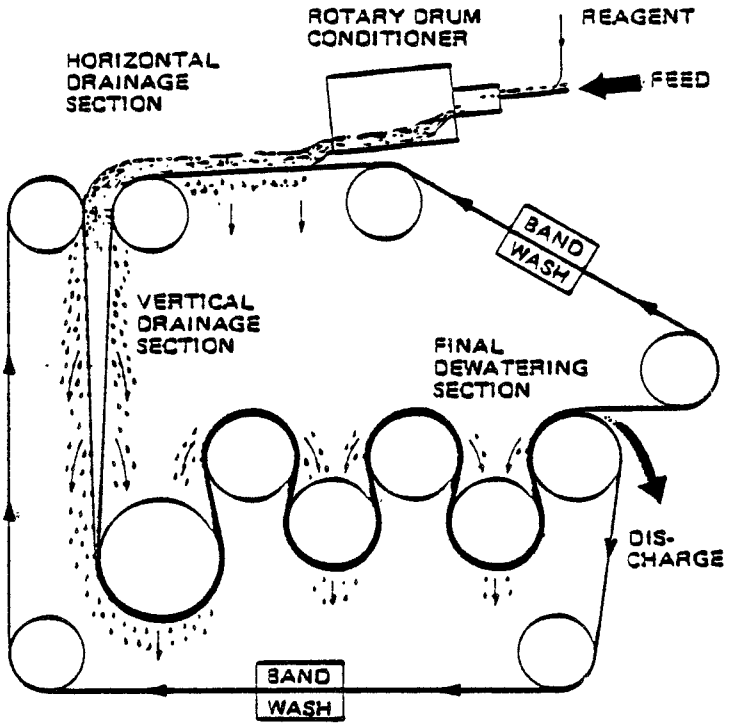

Figure 26. A simple belt filter press.

Excessive solids in the filtrate will get recycled through the treatment process and may adversely affect other treatment operations.

Process Monitoring

The primary criteria for evaluating the performance of a belt filter press are percent solids in the filter cake and the percentage of total solids entering the filter press that are captured in the cake. The calculation of these parameters and other parameters necessary for successfully operating a filter press are listed in Table 20.

The above parameters, with the possible exception of filtrate flow rate and total dissolved solids concentration, should be measured any time the belt press is used. Filtrate flow rate and total dissolved solids concentration may be measured less frequently but still should be measured approximately monthly. In addition the belt speed and the type and application rate of chemical conditioner should be recorded.

Example Calculations

Influent Suspended Solids--

Influent suspended solids are often difficult to measure directly in thick sludges. Therefore this parameter is often calculated by measuring the total solids in the influent and subtracting the filtrate total dissolved solids. If possible the filtrate total dissolved solids sample should be collected prior to the addition of wash water.

Percent Capture--

Percent capture is the percentage of influent solids that are captured in the cake. Percent capture is calculated as follows:

$$\% \text{ Capture} = 100 \times \left(1 - \frac{\text{Filtrate SS} \times \text{Filtrate Flow}}{\text{Influent SS} \times \text{Influent Flow}}\right)$$

An alternate, but less sensitive technique, for calculating percent capture is available when details about the filtrate are unavailable:

TABLE 20

BELT FILTER PRESS
PROCESS MONITORING REQUIREMENTS

Parameter	Frequency	Comment
1. Influent flow rate (gpm or L/min).	Continuously	- To set chemical dosages and to set flow rate.
2. Filtrate flow rate (gpm or L/min).	Monthly	- To determine mass (solids) loading of filtrate.
3. Influent total solids concentration (mg/L).	Regularly	- To set chemical dosage and to set flow rate.
4. Filtrate suspended solids concentration (mg/L).	Monthly	- To determine mass (solids) loading of filtrate.
5. Percent solids in cake.	Weekly	- To determine percent capture.
6. Net cake production rate (lb/hr, kg/hr, yd^3/hr, or m^3/hr).	Weekly	- To set loading rate.
7. pH	Continuously	- High or low pH values can increase solubility of particles.
8. Chemical conditioner type and concentration.	Weekly	- To set chemical dosage.

$$\% \text{ Capture} = \frac{\text{Wet Cake Production Rate x Percent Cake Solids}}{\text{Influent SS x Influent Flow}}$$

When using the above equations care must be taken to convert all parameters to similar units.

As an example, if a belt filter press received 50 liters/min of 20,000 mg/L sludge and produced 190 kg/hour of 30% cake the percent capture would be:

$$\% \text{ Capture} = \frac{190 \text{ kg/hr x } (1{,}000{,}000 \text{ mg/kg}) \text{ x } (\text{hr}/60 \text{ min}) \text{ x } 30}{20{,}000 \text{ mg/L x } 50 \text{ l/min}} = 95$$

Conditioning Agent Application Rate--

As previously described, the pretreatment of the sludge with chemical conditioning agents is essential for good dewatering. Typically, the conditioning agent is a polymer which is purchased in a dry or liquid form. The polymer is then diluted with water to a concentration that typically ranges from 1000 to 5000 mg/L (0.1 to 0.5 percent). The operator is advised to see manufacturer's recommendations for concentrations. This dilute polymer solution is then applied to the sludge on a basis of mass of polymer to mass of sludge suspended solids. The application rate of conditioner can be calculated as follows:

$$\text{Feed Rate} = \frac{\text{Polymer Dosage x Influent Flow x Influent SS}}{\text{Polymer Solution Concentration}}$$

where polymer dosage is the ratio of the weight of polymer applied per weight of influent solids and feed rate is the polymer pumping rate.

As an example, suppose a sludge stream containing 20,000 mg/L (2.0 percent) solids is being dewatered using a belt filter press at a rate of 50 liters per minute. Jar testing has indicated that a polymer dosage rate of five pounds of polymer per ton of dry solids is the optimum dosage rate and the manufacturer recommends that the polymer be diluted and premixed with water to a concentration of 5000 mg/L (0.5% solution). The polymer feed rate could then be calculated as follows:

$$\text{Feed Rate} = \frac{\frac{5 \text{ lb}}{\text{ton}} \text{ x } \frac{\text{ton}}{2000 \text{ lb}} \text{ x } \frac{50 \text{ lb}}{\text{min}} \text{ x } \frac{20{,}000 \text{ mg}}{\text{L}}}{5000 \text{ mg/L}} = 0.5 \text{ L/min}$$

One must use extreme care to make sure that the proper units and conversion factors are used.

Process Control Strategies

The operator of a belt filter press has several operating variables that are under his direct control. These variables and their effect on dewatering are listed below.

Sludge Feed Rate--

Increasing sludge feed rate will increase machine throughput if the belt speed is high enough, but will also cause an increase in cake moisture.

Conditioning Agent--

Proper selection of conditioning agent can dramatically increase solids capture and percentage of solids in cake. Selection of polymer is usually made based on jar test results.

Conditioning Agent Application Rate--

As polymer dosages increase, both cake solids and solids capture increase until an upper limit is reached. If sludge is underconditioned, improper drainage occurs in the gravity drainage section, and either extrusion of inadequately drained solids from the compression section or uncontrolled overflow of sludge from the drainage section may occur. Most belt presses can be equipped with sensing devices which can be set to automatically shut off the sludge feed flow in case of underconditioning. Both underconditioned and overconditioned sludges can blind the filter media. In addition, overconditioned sludge drains so rapidly that solids cannot distribute across the belt. Vanes and distribution weirs included in the gravity drainage section help alleviate the problem of distribution of overconditioned sludge across the belt. Inclusion of a sludge blending tank before the belt press can also reduce this problem.

Belt Speed--

Increasing belt speed can increase machine throughput but will typically result in lower cake solids content because both gravity drainage time and press time are decreased. Conversely, decreasing belt speed should result in a drier cake.

Belt Tension--

Increasing belt tension will promote a drier cake but solids capture typically will decrease and belt wear will increase.

Washwater Flow Rate--

An increase in washwater flow and/or pressure can increase cake solids concentration if the washwater was not adequately cleaning the belt, but also increases the flow requiring retreatment back to the head end of the plant. The flow rate required for belt washing is usually 50 to 100 percent of the flow rate of sludge to the machine and the pressure is typically 690 kPa (100 psi) or more. The combined filtrate and belt washwater flow is normally about 1.5 times the incoming sludge flow.

Belt Material--

Belts with different porosities are available. Increasing the porosity will increase the solids content of the cake, but will decrease the percent capture.

pH--

The pH of the sludge usually has little effect on polymers. The pH can, however, significantly affect the sludge material. Most sludges are metal precipitates and changing the pH can resolubilize a significant fraction of the sludge. This resolubilization is most likely to happen if sludges from two separate precipitations at different pH levels were mixed.

Polymer Addition Point--

It is essential that the polymer and sludge be properly mixed. Mixing usually occurs in a small tank prior to the belt filter press.

However, in some systems polymer is injected to the feed pipe to the filter press. Changing the injection point can significantly change the effectiveness of the polymer. Typically, increasing the distance between the injection point and the press will improve performance.

Influent Solids Concentration--

In general, a thicker incoming sludge will produce a drier cake. However, the initial solids concentration is not normally a process control variable. It is customary, unless special conditions apply, to deliver as thick a sludge as practical to the belt filtration unit.

TYPICAL PERFORMANCE VALUES

The performance of a properly operated belt filter press will vary significantly depending primarily upon the material being dewatered. Metal carbonates, such as those generated during lime precipitation, dewater easily with cake solids concentration in the range of 35 to 45% and capture ratios of over 95%. Hydroxide sludges usually do not dewater as well as carbonates. Typical cake solids concentrations will be 20 to 30% with capture ratios of 90 to 95%.

TROUBLESHOOTING GUIDE

The troubleshooting guide for the belt filter press process is presented in Table 21. The major problem in belt filter press operation is too thin or watery a sludge cake. The corrective methods involve either mechanical corrections (belt speed, application rate, etc.) or chemical changes (adjustments to the flocculation process, etc.). The problem of excessive belt wear is also addressed is Table 21.

TABLE 21
BELT FILTER PRESS
TROUBLESHOOTING GUIDE

PROBABLE CAUSE	CHECK OR MONITOR	REASON	CORRECTIVE ACTION
OPERATING PROBLEM 1: Dewatered sludge not thick enough.			
1a. Sludge application rate too high.	- Check sludge pumping rate.	- Excessive pumping causes excessively thick cake that does not have time to dewater.	- Adjust influent sludge pumping rate.
1b. Belt speed too high.	- Check belt speed.	- Sludge is carried through belt press before it has time to dry.	- Adjust belt speed.
1c. Incorrect polymer dose.	- Check polymer type, initial dilution, and flow rate. Determine polymer application rate on a pound polymer to ton of dry solids basis.	- Proper polymer dosage is essential for effective dewatering.	- If polymer dose is much less or much greater than optimum dose, performance will decrease. Use jar test procedure to determine optimum dose.
1d. Poor polymer-sludge mixing.	- Check polymer-sludge mixing.	- Improper mixing of polymer and sludge can completely negate the benefits of polymers.	- Enhance mixing. Change polymer addition point.
1e. Belt tension inadequate.	- Check belt tension.	- Insufficient tension will not force water out of cake.	- Increase belt tension.
1f. Improper belt type.	- Check belt type and manufacturer's recommendations.	- Belt porosity can directly affect cake solids content.	- Change belt.
1g. Insufficient wash water or pressure.	- Check belt to see if it is clean after washing.	- A dirty belt can inhibit the transport of water through the belt during dewatering.	- Increase water pressure and/or flow.

TABLE 21
(Continued)
BELT FILTER PRESS
TROUBLESHOOTING GUIDE

PROBABLE CAUSE	CHECK OR MONITOR	REASON	CORRECTIVE ACTION
OPERATING PROBLEM 2: Excessive belt wear.			
2a. Improper alignment of rollers.	- Check tracking of belt to see if it creeps off to one side.	- Can cause excessive pressure on localized areas.	- Adjust alignment of belt.
2b. Sludge buildup on bottom of belt or on rollers causing improper alignment.	- Check bottom of belt and the rollers.	- Can cause excessive pressure on localized areas.	- Clean belt and rollers.
2c. Belt tension too high.	- Check belt tension and automatic tension adjustment mechanism.	- Excessive tension causes wear.	- Adjust tension; repair tension adjustment equipment.

SECTION 15

VACUUM FILTRATION

INTRODUCTION

Vacuum filtration is a process used for dewatering sludges generated during wastewater treatment. The two products of vacuum filtration are a relatively clear liquid, the filtrate, and a solids cake which is suitable for final disposal. Depending upon the type of sludge being dewatered, vacuum filtration can produce a cake that is typically between 20 and 30 percent solids. Often, vacuum filters used for dewatering are preceded by a gravity thickener or a centrifuge to increase the solids concentration of the sludge fed to the filter, a combination which helps to maximize the solids content of the cake produced.

THEORY OF OPERATION

Filtration for dewatering is a process whereby solids are separated from a liquid by passing the liquid through a porous medium on which the solids remain and eventually build up to form a cake that is removed for disposal. The formation of a solids cake and the fact that solids are removed primarily on the surface of the medium rather than throughout its depth are two distinguishing features that characterize this type of filtration. Both features are important since the object of dewatering is to maximize the recovery of solids in a concentrated form.

Two steps are involved in the vacuum filtration process. In the first, a solids cake is formed when a portion of the water in the sludge drains through the filter medium leaving a more concentrated but still very wet sludge layer or cake behind. In the second step, additional

water drains from the solids, resulting in a much drier cake that can be handled as a solid material and is suitable for disposal. Thus, filtration to form a dry solids cake works on the same basic priniciple as do sludge drying beds, which are sometimes used for dewatering of metal finishing sludges.

The rate at which a solids cake is formed and is dried depends upon the rate at which water drains through the filter medium. In sludge drying beds, gravity is the force which causes the water to drain out of the sludge solids (the importance of evaporation is neglected in this discussion). To increase the rate at which sludge can be dewatered and thereby reduce the land area or size of equipment required, vacuum filters were developed. Such machines apply a suction or vacuum to one side of the filter medium while liquid sludge is applied to the other. Water is removed by the force of the pressure differential that develops across the medium, a pressure differential which is much greater than the force exerted by gravity.

Many types of vacuum filters and filter media have been developed, and several have been successfully used for dewatering sludges generated during treatment of metal finishing wastes. All operate on the same basic principle, differing primarily in the means by which the sludge is applied to and the solids cake removed from the medium. Although the process itself is fairly simple, the complexity of both machine-related and process- or sludge- related variables makes the operation of vacuum filters as much of an art as a science. For example, to optimize filter performance often requires that sludge conditioning with polymers and other chemicals be used. Although jar tests can be used to select appropriate polymers, finding the best combinations and optimum dosages is largely a matter of operating experience.

DESCRIPTION OF EQUIPMENT

Almost all of the vacuum filters used in wastewater treatment applications operate continuously and have as their principal component a horizontal cylindrical drum which rotates partially submerged in a vat

or tank containing the sludge to be dewatered, as shown in Figure 27. The drum is divided by partitions or seal strips into multiple compartments or sections each of which is connected by pipe to a rotary valve within the drum. Bridge blocks in this valve divide the drum compartments into three zones referred to as the cake formation zone, the cake drying zone, and the cake discharge zone.

The portion of the drum which is submerged in the sludge vat is the cake formation zone. Vacuum applied through the rotary valve to this portion of the drum causes liquid (filtrate) to pass through the medium with the sludge being retained on its surface in the form of a wet cake. The sludge vat is usually equipped with a reciprocating agitator to keep the slurry mixed and solids in suspension. As the drum rotates, each section or compartment is passed through the cake formation zone and on to the cake drying zone. Beginning where the rotating drum leaves the vat of liquid sludge, the cake drying zone usually represents 40 to 60 percent of the drum surface and ends at the point where the internal vacuum is shut off by the rotary valve. Here the sludge cake and drum section enter the cake discharge zone where the cake is removed from the medium.

A few vacuum filters have a gravity feed system which applies sludge directly on the top of the drum for cake formation rather than having the drum pass through a vat of sludge. Otherwise, the operation of this type of filter is essentially the same as the others.

The cake discharge cycle depends upon the type of filter medium used. The earliest type developed employs a scraper mechanism and a pressure blow-back system for cake removal. A positive air pressure is continuously applied through the rotary valve to the drum segment just preceding the scraper or "doctor" blade; the air aids in loosening the dried cake for removal. Often a fine spray is used to clean the medium after cake removal, with the washings being captured in a trough for recycle to a preceding treatment process.

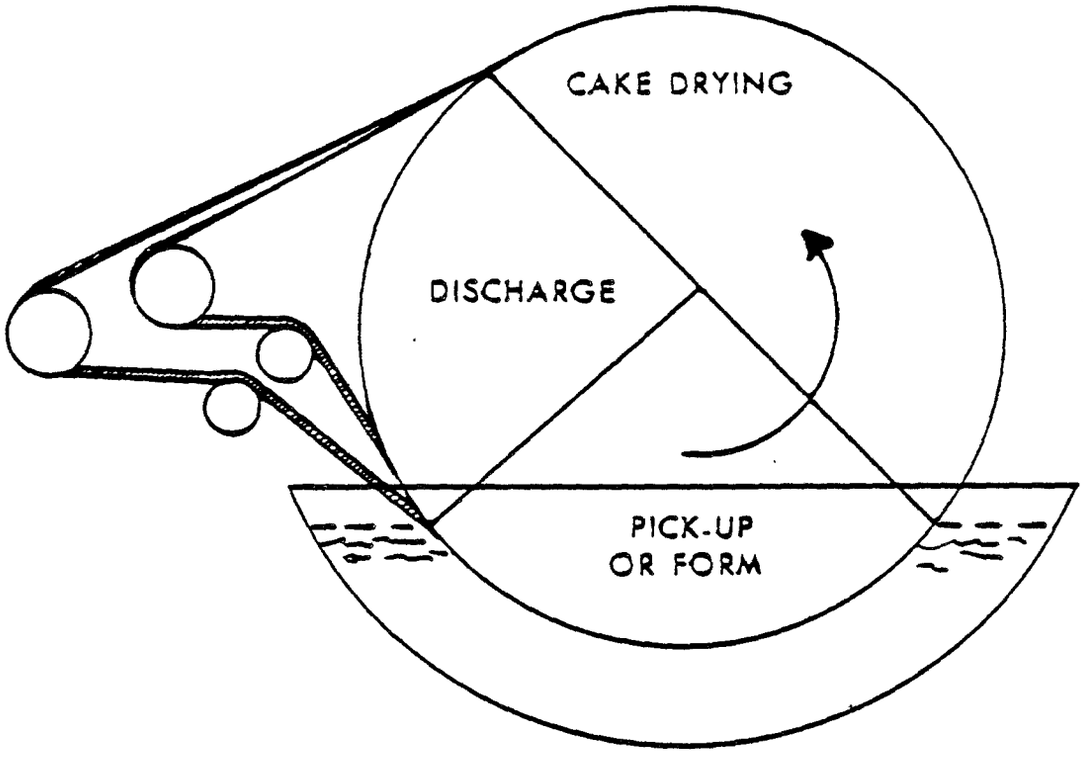

Figure 27. **Operating zones of a vacuum filter.**

More recently the belt-type rotary vacuum filters have gained in popularity since they do not depend upon intimate contact between a scraper and the rotating drum for effective removal of the solids cake. Rather, the filter medium forms a continuous belt that leaves the rotating drum when it enters the cake discharge zone and returns just before the cake formation zone. This kind of filter is shown in Figure 27. Three types of media or drum coverings have been used commonly: coil springs, closely spaced strings, and either woven cloth or metal fabric.

In one type of coil spring, belt-type vacuum filter, two layers of stainless steel springs wrap around the drum and act as the filter medium. After leaving the cake drying zone, the coil springs leave the drum and are separated in such a manner that the sludge cake is lifted off the lower layer and discharged off the upper layer with the aid of a positioned tine bar. The two coil spring layers are then washed with a water spray before returning to the drum just ahead of the cake formation zone.

A very similar type of filter uses closely spaced strings which are wrapped around the filter drum and serve as the medium. After leaving the drum, the strings pass over a series of discharge and return rolls which frees the cake from the medium. The strings then pass through a set of aligning combs before returning to the drum.

The other type of rotary vacuum belt filter has a fiber belt made of woven cloth (either natural or synthetic) or metal. A wide range of materials has been developed for use as filter media and the selection of media type and pore size for use with a particular sludge is a critical variable affecting filter performance. In this type of filter, the belt (or filter medium) leaves the cake drying zone and passes over a small diameter discharge roll which facilitates cake removal. Generally this type of filter has a small diameter curved bar between the point where the belt leaves the rotating drum and the discharge roll. The position of this bar can be adjusted so that it pushes against the inside of the belt to control belt tension and maintain dimensional stability. After the cake is discharged, the belt usually is washed with

water sprays from one or both sides before it returns to the drum just ahead of the cake formation zone.

There are several important auxiliary equipment items which are part of the vacuum filtration system. These are vacuum pumps, vacuum receiver, filtrate pump, sludge pump, chemical feed system, sludge conditioning tank, silencer, and, with some units, blowers. In larger facilities these auxiliary items are often remote from the filters themselves and several filters may be served by the same equipment through common headers. A schematic illustration of a typical system is presented in Figure 28.

The most important auxiliary item is, of course, the vacuum pump which provides the negative pressure filtering force. Several types of vacuum pumps have been used including reciprocating positive displacement types, centrifugal (wet), and rotary or lobe pumps (semi-wet). Depending on solids content and chemical composition, the filtrate is sometimes used as seal water on these pumps. A silencer usually is provided on the discharge of a vacuum pump to reduce the noise produced during its operation. The "wet" operating pumps must also have provisions for water separation and draining of the seal water. Vacuum pumps are usually sized to provide between 1 and 2 scfm/sq ft of filter surface area at negative operating pressures of 20 inches of mercury.

Each filter generally is supplied with a vacuum receiver located between the rotary valve (which distributes the vacuum inside the drum) and the vacuum pump. The principal purpose of the vacuum receiver is to separate the air from the filtrate, as well as to serve as a reservoir for the filtrate pump suction. With dry-type vacuum pumps, a moisture trap is provided between the vacuum receiver and the pump.

Usually a filtrate pump is provided to carry away the water separated in the vacuum receiver. Specially designed centrifugal pumps that operate at very low net positive suction heads are used for this purpose, since the receiver is often under a negative pressure of about 20 inches of mercury. Check valves generally are provided on the discharge

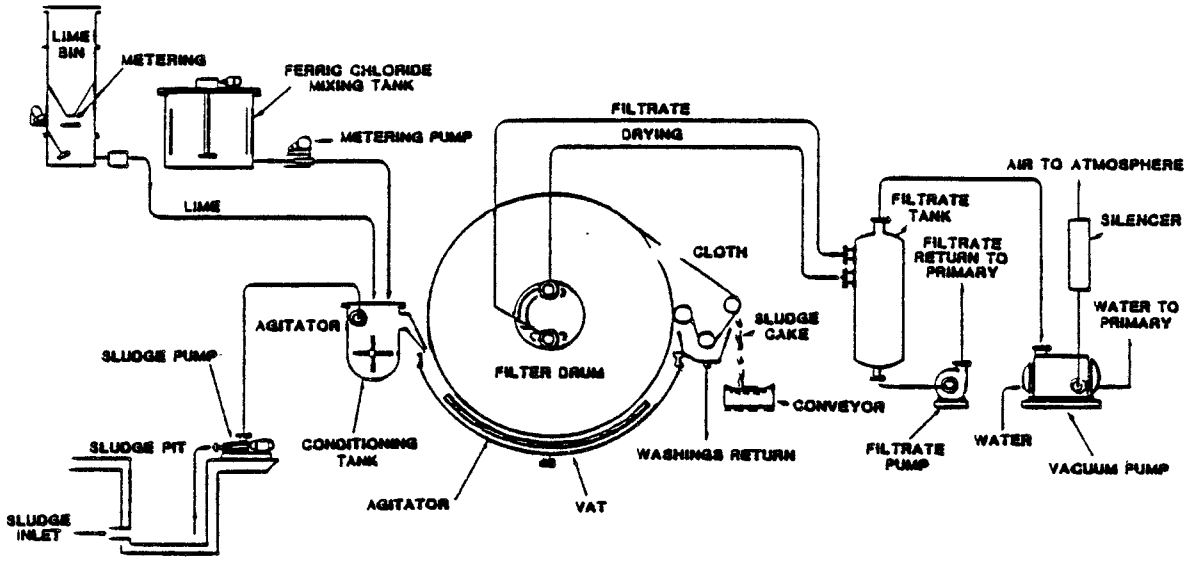

Figure 28. **Typical equipment layout of rotary vacuum filter system.**

side of these pumps to prevent air from leaking back through the pump and into the receiver. Sometimes the filtrate pump is omitted when a barometric leg or gravity discharge is provided on the bottom of the receiver.

Piston, diaphragm, and progressive cavity pumps are all commonly used as sludge feed pumps. They are installed so that a constant capacity can be maintained at a given setting. Usually a stroke counter or other totalizing device is provided for flow measurement.

A sludge conditioning tank usually is provided in close proximity to the vacuum filter from which the conditioned sludge either flows by gravity or is pumped to the filter. The tank acts as both a mixing vessel and a flocculation tank. Other aspects of the chemical addition system are common to other sludge handling systems and are described in a separate section.

In vacuum filters that have a positive pressure blow-back system to lift the medium from the filter drum ahead of a scraper or doctor blade, low capacity lobe type air blowers are used. These are usually sized to provide about 0.25 scfm/sq ft of filter surface area and operate at pressures of about 2 psig.

OPERATIONAL PROCEDURES

The main objective of vacuum filter operation is to produce a sludge cake with a high solids concentration (low moisture content) that is suitable for final disposal. In doing so, the filtrate that is produced must be low in suspended solids so that problems are not created when it is recycled back to preceding treatment processes. Further, these two objectives must be met without reducing the filter yield below a level sufficient to handle the sludge solids generated during wastewater treatment. Otherwise, solids will accumulate in the system and will eventually affect other treatment processes. Maintaining an acceptable filter yield often requires the addition of chemical coagulants and filter aids. Another process objective is to minimize the operating

costs associated with sludge conditioning. Vacuum filter performance cannot be maximized with respect to all of these objectives at the same time, since some of them are conflicting. Therefore, good vacuum filter operation represents a compromise between these objectives in which filter performance is optimized for a particular application.

Process Monitoring

The criteria used to evaluate vacuum filter performance are solids concentration or water content of the cake, efficiency of solids removal, and filter yield. The efficiency of solids removal usually is expressed as the percent solids recovery (or solids capture) which is the mass ratio of dry cake solids produced by the filter to the dry sludge solids fed to the filter over a given period of time. A decrease in solids recovery means that more solids are passing through the filter medium. Since this usually results in higher solids concentrations in the filtrate, the efficiency of filtration is sometimes expressed as a function of the filtrate solids concentration, although the solids removed from the cloth by water sprays should also be accounted for. The filter yield refers to the amount of solids, on a dry weight basis, removed as part of the solids cake over a given period of time.

In order to evaluate vacuum filter performance and diagnose problems, a complete record of several operating parameters must be kept. These are summarized in Table 22.

This information should be recorded routinely, along with machine operating conditions such as drum speed, drum submergence, vacuum pressure, etc. It is particularly important that any changes in performance or operating conditions be recorded along with the time that they are made.

TABLE 22

VACUUM FILTRATION
PROCESS MONITORING REQUIREMENTS

Parameter	Frequency	Comment
1. Feed sludge flowrate (GPM or L/min).	Daily	To determine flowrate.
2. Filtrate flowrate (gpm or L/min).	Weekly	To determine filter performance.
3. Total and suspended solids concentration in feed sludge slurry (mg/L).	Daily	To determine feed rate to filter.
4. Total solids concentration in solids cake (mg/L or percent by weight).	Daily	To determine solids removal and filter efficiency.
5. Total and suspended solids concentration in filtrate (mg/L).	Daily	To determine solids loading in filtrate.
6. Concentration of chemical conditioners added to sludge (ppm or percent).	Weekly	To set conditioning requirements.
7. Feed rate for chemical conditioners (L/min or gpm).	Weekly	To set conditioning requirements.
8. Feed sludge temperature (^{o}F or ^{o}C).	Daily	Temperature affects filterability.
9. Feed sludge pH.	Daily	High or low pH values can change solubility of particles.
10. Wash water flowrate (gpm or L/min).	Weekly	To determine volumes of liquid in mass balance.
11. Solids concentration in wash water (mg/L).	Weekly	To determine solids in wash water, solids removal, and filter efficiency.

Example Calculations

Example calculations of operating parameters are presented below. Consider a rotary belt vacuum filter for which the following data have been collected:

Feed sludge flow rate	= 20 gpm
Filtrate flow rate	= 18 gpm
Feed suspended solids	= 40,000 mg/L (4.0 percent)
Filtrate suspended solids	= 600 mg/L
Cake solids concentration	= 300,000 mg/L (30 percent)
Cloth wash water spray	= 6 gpm
Solids concentration in wash water	= 4,900 mg/L

The solids feed rate (dry solids fed to the filter per hour) is calculated as follows:

Solids feed rate = (feed sludge flow rate)(feed suspended solids)

= (20 gpm)(60 min/hr)(3.785 L/gal)(40 g/L)

($kg/10^3$ g)

= 182 kg/h = 400 lb/hr

The solids removed (dry solids removed per hour) is calculated as follows:

Solids removal = (feed solids mass)-[(filtrate solids mass)+

(wash water solids mass)]

= 400 lb/hr - [(18 gpm)(0.6 g/L)+(6 gpm)(4.9 g/L)]

[(3.785 L/gal)(lb/454 g)(60 min/hr)]

= 380 lb/hr

The filter efficiency, expressed as percent solids recovered, is calculated as follows:

$$\text{Filter efficiency (\%)} = \frac{\text{Solids removal}}{\text{Solids feed rate}} \times 100$$

Filter efficiency = (380)/(400) x 100 = 95.0 percent

Process Control Strategies

The operation and performance of a vacuum filter is determined by several variables that are related either to the machine itself (machine variables) or to the specific sludge dewatering application (process variables). Among these are the following:

Machine Variables	Process Variables
Vacuum Pressure	Sludge Characteristics
Drum Speed	Chemical Addition
Drum Submergence	Solids Concentration
Filter Medium	Sludge Feed Rate
Tank Agitation	Temperature
Spray Water Pressure	pH
Position of Doctor Blades	

Machine Variables--

One of the most important machine-related variables is the vacuum pressure applied during formation and drying of the sludge cake. Within limits, the filter yield can be increased by increasing the vacuum since a higher vacuum generally results in greater cake thickness during the formation process. Practical limits usually are encountered at vacuum pressures of about 15 inches of mercury, since energy requirements increase rapidly with higher operating pressures. Further, many wastewater sludges are highly compressible, though this is not true for all types of sludge, and under higher vacuums these sludges form an impervious cake that is difficult to dewater. In such a case, increased vacuum pressures may reduce filter yield.

The drum speed, or the rate at which the filter drum rotates, affects both cake formation and cake drying operations. As the drum speed is reduced, the cake has a longer period of time to dewater, resulting in a drier cake. However, reducing drum speed reduces filter

yield so that less sludge can be dewatered in any given period of time. Conversely, an increase in the drum speed results in a higher filter yield since more medium is passed through the cake formation zone during any given period of time. A wetter cake also results, however, since the sludge cake spends less time in the cake drying zone.

The degree to which the filter drum is submerged in the sludge vat, referred to as drum submergence, usually is expressed as a percentage of the drum circumference or filter medium surface area (the difference between these is a constant value). Drum submergence normally can be varied between 15 and 25 percent. An increase in submergence increases the cake formation area (and therefore cake formation time) but reduces the area (and time) available for cake drying; this usually results in a wetter but thicker cake. Decreasing the drum submergence produces a thinner but drier cake. A minimum submergence must be maintained to prevent vacuum on the filter from being broken.

Probably the most important machine variable is the filter medium itself. Selection of a filter medium suitable for use in a particular application is one of the most critical design considerations since it can determine the operating and performance limits of the vacuum filter. Materials which have been used as fabric media include cotton, rayon, acrylic, polyolefin, polyester, polypropylene, and nylon. Metal wire or mesh media also have been used, as have stainless steel coil springs. All of these media can be categorized as open or tight, with open media having larger size pores through which small solid particles can pass. Although a tight filter medium will remove a higher percentage of fine particles, thereby increasing filter efficiency, it can blind or stop up completely making filtration impossible. Spray washing of the media after cake discharge helps to prevent the build-up of fine particles which might otherwise blind the filter media. The characteristics of the filter medium usually change with use as it becomes worn or partially blinded with solids. While such changes usually occur gradually, it can eventually become necessary to replace the medium. Occasionally the medium type has to be changed, either to improve filter performance or because the previously used medium is not available. Whenever the

filter medium is changed, and particularly when a different type of medium is used, the operation and performance of the vacuum filter can be expected to change also; sometimes these changes are significant.

Two machine variables that affect solids removal from the filter media are the pressure of the water sprays and the position of the doctor blades. Both are of critical importance and very minor adjustments can result in improved or diminished performance. Optimization of water spray pressure and doctor blade position is a matter of operating experience.

The final machine variable requiring discussion is the degree of agitation provided in the sludge vat through which the filter drum rotates. Agitation is required to prevent solids from settling, and some minimum level needed to meet this objective must be determined from operating experience. However, too much agitation can result in shearing or break-up of the sludge floc resulting in a lower filter efficiency and higher solids levels in the filtrate.

Process Variables--

The physical and chemical characteristics of the sludge to be dewatered together represent the single most important process variable affecting vacuum filtration. Different sludges exhibit dramatically different dewatering characteristics. Among the factors that determine filterability are the size, shape, density, and electrical charge of solid particles, viscosity of the liquid, and compressibility of the sludge solids. Generally these factors are not directly under the operator's control since they result from optimization of upstream treatment processes.

To compensate for poor filtering characteristics or to increase cake solids concentration, polymers and other chemicals often are added to the sludge prior to filtration. These may be required to help in cake formation and/or cake drying. Polymers and other coagulant aids promote flocculation, which increases particle size and improves filter efficiency. Filtering aids such as lime, diatomaceous earth, clay, fly

ash, and other materials can be mixed with the sludge to improve solids recovery, facilitate good cake formation, and reduce sludge compressibility (which helps in cake drying). Selecting the proper coagulants and filter aids for a particular application is based upon jar tests, while optimizing their use is a matter of operating experience. Optimization of chemical usage is important since chemical cost usually represents the greatest single operating cost associated with vacuum filtration.

Another process-related variable is the solids concentration of the feed sludge. Up to a point, a higher solids concentration in the feed sludge usually results in a drier cake discharge and a higher filter yield. Another advantage of higher feed solids levels is that chemical requirements for sludge conditioning often are reduced. For these reasons, vacuum filters are sometimes preceded by gravity thickeners or centrifuges that increase the sludge solids concentration. Changes in the operation of upstream thickeners, centrifuges, or even clarifiers can improve filter performance if the changes increase the concentration of solids in the feed sludge. However, there are practical limits as to how high the feed solids concentration can be, as determined when pumping, mixing, and other problems begin to occur. The maximum solids concentration usually fed to vacuum filters is from 8 to 10 percent; above these numbers cake formation becomes difficult.

TYPICAL PERFORMANCE VALUES

The most important factor affecting the performance of a vacuum filter is the type of sludge being dewatered. If sodium hydroxide is used for pH adjustment to precipitate metal hydroxides, a light, slimy, and relatively difficult to dewater sludge will result. One of the main problems caused by this type of sludge is that it can blind the filter medium and form an impermeable cake that dewaters poorly. These problems usually can be overcome, however, by using proper conditioning agents, such as polymers and filter aids.

When lime is used for precipitation of metals, the amount of excess lime determines the dewatering characteristics of the sludge. When very little or no excess lime is added, most of the sludge formed will be metal hydroxides. If considerable excess lime is used, a large amount of calcium carbonate will be present in the sludge, making it heavier and more easily dewatered, since calcium carbonate sludges tend to form much more permeable cakes.

Table 23 gives typical performance values for rotary vacuum filters applied to both metal hydroxide and lime-carbonate sludges.

TROUBLESHOOTING GUIDE

The problems which are commonly associated with vacuum filter operations have been summarized in the form of a troubleshooting guide in Table 24. This is a general guide and some parts of the vacuum filtration system may have unique operating problems; these are usually addressed in the manufacturer's literature.

Vacuum filtration is one of the more difficult wastewater treatment processes to operate, because of the number of variables which affect performance. Therefore, whether diagnosing operating problems or optimizing filter performance, it is important to change only a single variable at a time. Otherwise, the cause of a problem (or its solution) cannot be determined with certainty. It is especially important that all other variables be held constant when determining optimum dosages for sludge conditioning.

TABLE 23
TYPICAL PERFORMANCE VALUES FOR VACUUM FILTRATION DEWATERING

Type of Sludge	Feed Solids Concentration (%)	Cake Solids Concentration (%)	Solids Recovery (%)	Typical Conditioning Chemicals
Metal Hydroxide				
- without conditioning	2-6	15-25	85-95	Lime; Diatomaceous Earth
- with conditioning	4-8	20-30	90-95	Anionic Polymers
High $CaCO_3$				
- without conditioning	2-8	20-30	90-95	Anionic Polymers Diatomaceous
- with conditioning	6-10	30-45	95+	Earth

TABLE 24
VACUUM FILTRATION
TROUBLESHOOTING GUIDE

PROBABLE CAUSE	CHECK OR MONITOR	REASON	CORRECTIVE ACTION
OPERATING PROBLEM 1: Thin cake, poor dewatering.			
1a. Filter media blinding.	- Digest media and check spray washes.	- To determine if blinding is occurring and if it is caused by insufficient washing.	- Adjust spray washes or, if necessary, shut down filter and clean media.
1b. Improper chemical dosage.	- Check chemical addition system for malfunction.	- If no problems with equipment, the optimum dosage may have changed.	- Repair or adjust chemical addition system or, if necessary, determine new optimum dosage rates.
1c. Inadequate vacuum.	- Vacuum gauges and input for leaks or broken seals.	- To isolate the problem.	- Repair or adjust vacuum system to achieve desired vacuum.
1d. Drum speed too high.	- Drum speed and operating records.	- To determine if a change has occurred.	- Reduce drum speed if necessary.
1e. Drum submergence too low.	- Drum submergence and operating records.	- To determine if a change has occurred.	- Increase drum submergence to get thicker cake, decrease it to get drier cake.
1f. Feed sludge solids concentration has decreased.	- Solids feed rate and operating records.	- If solids have decreased, different operating conditions may be required.	- Determine if the solids level can be increased by changes in upstream processes. Otherwise, new operating conditions will have to be determined.
OPERATING PROBLEM 2: High solids in filtrate - low efficiency.			
2a. Improper chemical dosage.	- Check chemical addition system for malfunction.	- If no problems with equipment, the optimum dosage may have changed.	- Repair or adjust chemical addition system or, if necessary, determine new dosage rates.

TABLE 24
(Continued)
VACUUM FILTRATION
TROUBLESHOOTING GUIDE

PROBABLE CAUSE	CHECK OR MONITOR	REASON	CORRECTIVE ACTION
2b. Wrong type of media.	- Filter leaf tests.	- To select better media.	- Change media type.
OPERATING PROBLEM 3: Vacuum pump stops.			
3a. Lack of power.	- Check to see if heater tripped.	- Motor overload will trip heater.	- Determine cause of overload. Restart after cooling period.
3b. Lack of seal water.	- Source of seal water.	- To insure adequate flow.	- Start seal water flow.
3c. Broken V-belt.	- V-belt.	- V-belt may be worn or broken.	- Replace V-belt.
OPERATING PROBLEM 4: Drum stops rotating.			
4a. Lack of power.	- Check to see if heater tripped.	- Motor overload will trip heater.	- Determine cause of overload. Restart after cooling period.
4b. Drive mechanism broken.	- Check belt, chain, gear, etc.	- To determine what is broken.	- Repair or replace broken part(s).
OPERATING PROBLEM 5: High vat level.			
5a. Feed rate too high.	- Feed rate, solids yield, and operating records.	- To determine if any changes have occurred.	- Lower feed rate or increase drum speed.
5b. Drum speed too slow.	- Drum speed, solid yield, and operating records.	- To determine if any changes have occurred.	- Increase drum speed or reduce feed rate.

TABLE 24
(Continued)
VACUUM FILTRATION
TROUBLESHOOTING GUIDE

PROBABLE CAUSE	CHECK OR MONITOR	REASON	CORRECTIVE ACTION
5c. Improper chemical dosage - poor cake formation.	- Check chemical addition equipment for malfunction.	- If no problems with equipment, optimum dosages may have changed.	- Repair or adjust chemical addition system and, if necessary, determine new dosage rates.
5d. Filtrate pump off or clogged.	- Check filtrate pump and discharge.	- If on, it may be clogged.	- Turn on pump or unclog it.
5e. Drain line clogged.	- Drain line for flow.	- Drain line may stop flow.	- Clear drain line.
5f. Vacuum pump stopped.	- See Item 3.	- See Item 3.	- See Item 3.
5g. Seal strips missing.	- Drum interior.	- Loss of vacuum would prevent removal of filtrate.	- Replace seal strips.
OPERATING PROBLEM 6: Low vat level.			
6a. Feed rate too low.	- Feed rate, solids yield, operating records.	- Cake forms faster than solids applied to filter.	- Increase feed rate or decrease drum speed.
6b. Vat drain valve open.	- Vat drain valve.	- Open valve can drain vat.	- Close vat drain valve.
OPERATING PROBLEM 7: Filtrate receiver vibrating.			
7a. Filtrate pump is clogged.	- Check pump outlet for flow.	- Flow indicates possible clog.	- Turn off pump and clean it.
7b. Loose bolts or other parts.	- Check gaskets, inpaction plates, mounting, etc.	- Damage can result.	- Tighten loose parts; replace broken parts.
7c. Check to see if ball valve in filtrate pump or suction line is worn.	- Check ball valve.	- Worn ball valves can cause vibrations.	- Replace worn parts.

TABLE 24
(Continued)
VACUUM FILTRATION
TROUBLESHOOTING GUIDE

PROBABLE CAUSE	CHECK OR MONITOR	REASON	CORRECTIVE ACTION
7d. Air leaks in suction line.	- Impact line for leaks.	- Leaks in air line can cause vibrations.	- Seal leaks.
7e. Dirty drum face.	- Check drum face.	- Uneven vacuum results in pressure surges.	- Clean off drum face with with hose.
7f. Seal strips missing.	- Check drum interior.	- Uneven vacuum results in surges.	- Replace seal strips.
OPERATING PROBLEM 8: High amperage draw by vacuum pump.			
8a. Filtrate pump clogged.	- Filtrate pump output for flow.	- Vacuum pump drawing water from receiver.	- Turn pump off and clean.
8b. High vat level.	- See Item 6.	- See Item 6.	- See Item 6.
8c. Cooling water flow to vacuum pump too high.	- Cooling water flow.	-	- Decrease cooling water flow.
8d. Blinding of media causing high vacuum pressure.	- Check media and spray washer.	- To determine if media is soiled.	- Adjust spray washer and clean media, if necessary.
8e. Highly compressible sludge forming impermeable cake.	- Cake dryness and consistency. Check chemical addition system.	- May require addition of lime or other filter aid to improve sludge characteristics.	- Adjust chemical addition rates to improve cake characteristics.
OPERATING PROBLEM 9: Scale buildup on equipment.			
9a. High dosage of lime.	- pH adjustment to determine if excessive lime is added.	- High lime dosages or presence of unreacted lime may cause scale.	- Fine tune lime dosage (see pH adjustment and metal precipitation.)

TABLE 24
(Continued)
VACUUM FILTRATION
TROUBLESHOOTING GUIDE

PROBABLE CAUSE	CHECK OR MONITOR	REASON	CORRECTIVE ACTION
9b. $CaCO_3$ is precipitating out of solution.	- Influent calcium concentration and calcium solubility at operating pH.	- If influent calcium concentration is greater than solubility, then scale will form.	- Fine tune lime dosage, operate pH adjustment at different pH or decrease retention time of sludge in equipment by washing thoroughly with muriatic acid after operation.

SECTION 16

PRESSURE FILTRATION FOR DEWATERING

INTRODUCTION

Pressure filtration is a process used for dewatering sludges generated during wastewater treatment. Pressure filtration results in the generation of two products: a relatively clear liquid, called the filtrate, and a solids cake that is suitable for direct disposal. Compared to other mechanical dewatering processes, pressure filtration generally achieves the driest solids cake for any particular sludge. There is a cost associated with improved performance, however, as pressure filters are usually more expensive to operate than other types of dewatering equipment. Generally, but not always, pressure filters used for sludge dewatering are preceded by a gravity thickener or a centrifuge to increase the solids concentration of the sludge fed to the filter. Since pressure filters are designed and operated as batch processes, it may be important to reduce sludge volume by thickening prior to filtration.

THEORY OF OPERATION

The basic principle by which pressure filtration works is the same as for vacuum filtration: solids are separated from a liquid by passing the liquid through a porous medium on which the solids remain, eventually building up to form a cake that is removed for disposal. This process is much like what happens when sludge is applied to a sand drying bed. Water drains from the sludge into the sand leaving behind a concentrated solids layer. Given time, the force of gravity will cause enough water to drain out so that a sludge cake will form which can be handled and disposed of as a solid. In vacuum filters, a negative

pressure differential that is equivalent to about 1000 times that of sand drying is applied to speed up the drying process. Pressure filters apply even greater forces to the sludge--up to 20,000 times the pressure differential of sand drying--which results in an even drier solids cake.

Almost all pressure filters used in sludge dewatering applications are designed to operate in a batch mode, as opposed to continuous operation. The usual sequence of events is as follows. First, the sludge slurry is applied to the filter and a sludge cake is formed on the filter medium as the filtrate passes through it and is removed. As additional sludge is pumped into the filter, the cake grows thicker and the backpressure increases. Eventually a point is reached when the sludge feed pumps are stopped. This point is based either upon time, decrease in feedrate, or operating pressures. Depending upon the type of filter, a cake compression step may follow, in which additional water is removed from the cake. Any remaining sludge slurry is then drained from the filter, after which the filter is opened to expose and discharge the solids cake. Once the cake has been removed and the media cleaned (if necessary), the filter is closed and the next cycle can begin.

Some filters and some types of sludge require that additional steps be performed. For example, to prevent blinding of the media, to improve solids capture, and to allow easy cake removal, it may be necessary to apply a precoat to the filter media before introducing the sludge. Precoating is done often when a greasy or sticky sludge, e.g., metal hydroxide, is being dewatered.

Sludge characteristics can affect dewaterability by pressure filtration just as they affect vacuum filtration. Generally, the much higher operating pressures compensate for poor sludge characteristics, although there are exeptions to this rule. Chemical conditioning with polymers or inorganic chemicals may be necessary to improve the sludge compressibility (resulting in a drier cake) and achieve a good quality filtrate. Sludge conditioning may also be necesary to get good cake release.

DESCRIPTION OF EQUIPMENT

As with vacuum filtration, the formation of a solids cake and the fact that solids are removed primarily on the surface of the filter medium rather than throughout its depth are two features that distinguish pressure filtration for sludge dewatering from other filtration processes. This distinction is important since pressure filters are used in other applications, such as in cartridge filters and strainers used online for the removal of solids from liquid streams. Since such types of pressure filters are not used in sludge handling and treatment operations, they will not be discussed in this section of the manual.

Batch pressure filters can be divided into three major groups:

(1) Filter Presses--including plate-and-frame presses and recessed-plate presses,

(2) Leaf, Plate, and Candle (Tubular) Filters--filters which take their names from the shape or orientation of the surfaces that collect the filter cake,

(3) Variable-Volume Filters--in which a cake is formed by pressure filtration and then compressed to expel the excess water remaining in it.

The distinction between these groups is somewhat arbitrary and different people may consider the same kind of filter to belong in different groups. These points are not important, however, since all operate on the same basic principles.

Filter Presses

Filter presses represent the most common type of pressure filters and consist of numerous plates with corrugated surfaces over which the filter medium is draped, as shown in Figures 29 and 30. The filter medium is usually in the form of woven cloth and often is made of synthetic monofilament fiber. The operating pressure is created by pumps

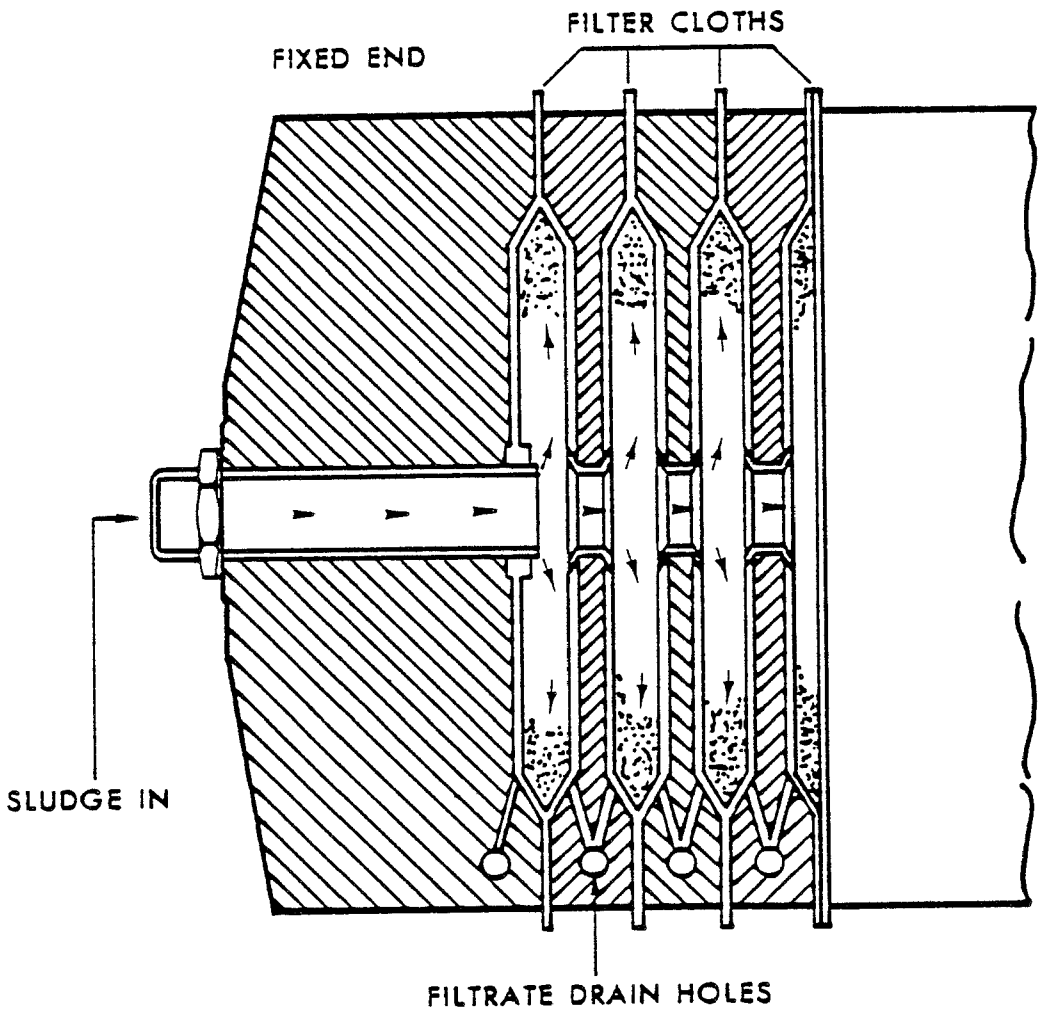

Figure 29. **Cutaway view of a filter press.**

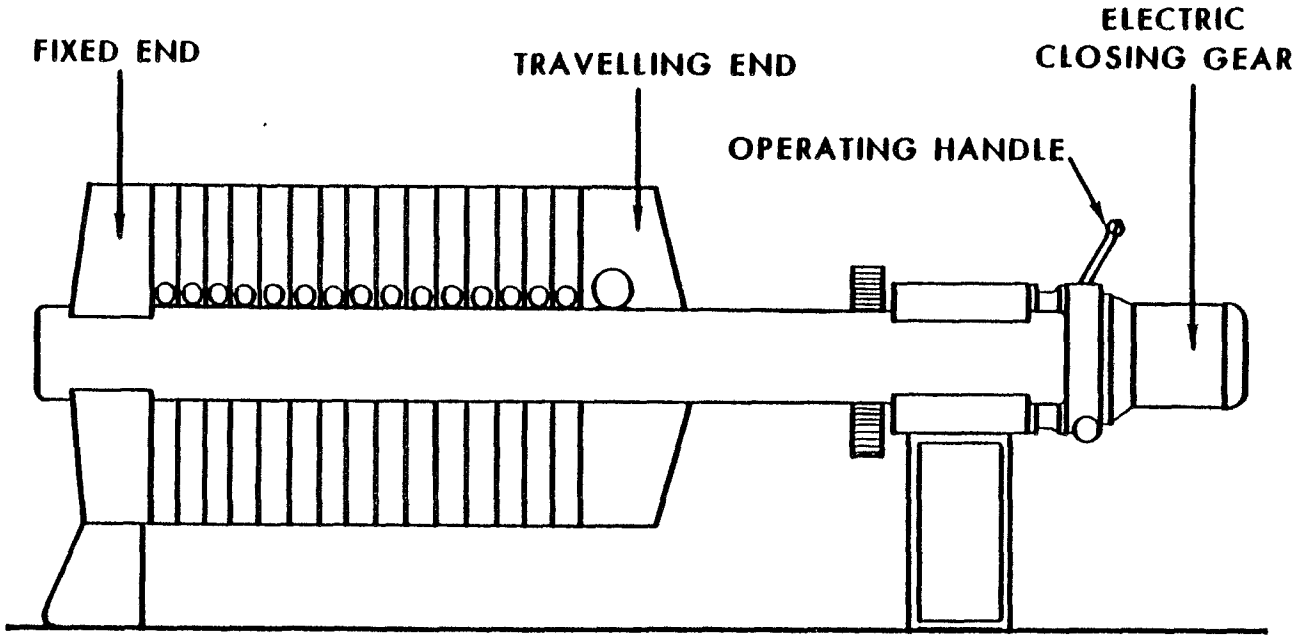

Figure 30. **Side view of a filter press.**

which introduce the sludge slurry between layers of the filter medium. One end of the press is fixed while the other end can be moved to allow separation of the plates and discharge of the solids cake. There are two main types of filter presses, the plate and frame press and the recessed plate press.

In the plate-and-frame press, the plates are separated by hollow frames which are covered with the filter medium. The alternating plates and frames are held tightly together during filter operation to form a continuous unit. Sludge is introduced into the hollow frames and the solids cake then forms on the filter medium (within the frames). The filtrate passes through and drains along the corrugations in the plate from which, depending upon the individual filter, it may drain directly out the bottom of each plate or may flow through a channel that runs the length of the press. Sludge feed continues until the frames are full, as judged by time, decrease in feedrate, or increase in backpressure. At the end of the batch, the press usually is drained of any remaining liquid after which it is opened and the plates and frames separated to release the solids cake.

Another type of filter press is the recessed-plate press. In this type of press, the plates are shaped so that a hollow space exists between them in which the solids cake forms. There are no separate hollow frames between adjacent plates. Sludge enters the press through ports in the center of the plates. Otherwise, the recessed-plate press looks and is operated just like the plate and frame press.

Leaf, Plate, and Candle Filters

Pressure filters in this group have a number of hollow filter elements suspended either vertically or horizontally within a closed vessel. The shape of these elements is what gives the various types of filters in this group their names. These filter elements are often covered with a woven cloth filter medium, although there are some applications in which the surface of the filter element also serves as the filter medium. Sludge flows into the vessel under pressure and liquid

(filtrate) flows out through the hollow elements to a common discharge manifold. In the process, the solids left behind on the filter medium build up to form a cake which eventually causes the operating pressures to increase and sludge feedrates to decrease.

At the end of an operating cycle, the vessel is depressurized and any remaining slurry is drained. The filter is then opened and the filter elements are removed (usually this process is automatic). The cake is then removed from the filter elements by one or more of several methods including vibration, scraping, compressed air blow-back, centrifugal force, and leaf rotation.

Variable-Volume Filters

The third type of pressure filter first forms a solids cake, usually by pressure filtration, and then compresses it to expel additional water contained in the wet cake. The purpose is to produce a drier cake than in conventional filter presses. The variable-volume name refers to the fact that in these filters the size of the chamber in which the cake is formed changes during operation by the movement of a diaphragm. In fact, these filters are often referred to as diaphram filters. The most common type of variable-volume diaphragm pressure filter somewhat resembles a recessed plate filter press. All of the filters of this type operate on the same basic principle, although there are numerous variations in the individual steps of an operating cycle.

OPERATIONAL PROCEDURES

The main objective of using pressure filters for dewatering is to produce a solids cake for discharge that has a very high solids concentration. High solids concentration is important since the moisture content of the sludge directly affects hauling and disposal costs--it is certainly not desirable to pay more for hauling water in the form of a wet cake, if a drier cake can be achieved. To achieve a high concentration in the cake, very high operating pressures are required, as is a tight filter medium (one with very small pore sizes). As a result of

these features, filtrate quality is usually not considered to be a performance limiting factor in pressure filtration. More important is the filter yield, or mass of solids (dry weight) that can be dewatered in a given amount of time. An increase in the yield usually requires that the batch cycle time be decreased, which in turn results in a wetter cake. Therefore, the objective of pressure filter operation is to maximize cake solids while still achieving a filter yield that is sufficient to process all the sludge generated in upstream treatment processes.

Process Monitoring

Filter press performance is measured by the solids content in the feed sludge, required chemical conditioning dosages, cake solids content, total cycle time, solids capture, and the filter yield. Of these, the last two require some explanation.

Solids capture, also called solids recovery, is the mass ratio of cake (or thickened sludge) solids to the feed solids for a single batch run. A low solids capture means that solids are lost in the filtrate and are not part of the solids discharge. The solids yield (removal) refers to the amount of solids, on a dry weight basis, that can be removed by a pressure filter during a single batch run. The yield multiplied by the number of batches run must equal or exceed the sludge generation rate if solids are not to accumulate upstream in the treatment system.

The performance parameters discussed above are all interrelated; for example, as the feed solids content increases, the required chemical dosages and total cycle time usually decrease, while the filter yield or throughput usually increases. As the chemical conditioning dosage is increased to the optimum level, the cake solids content, solids capture, and yield all increase, while the cycle time decreases.

In order to evaluate pressure filter performance and diagnose operating problems, a complete record of several operating parameters must be kept. These are listed in Table 25.

This information should be recorded routinely, preferably for each batch. It is especially important that changes in pressure settings, filter cycle time settings, chemical conditioning dosages, etc. be recorded along with the time (batch number) that they are made. In this way a useful record of the effects of process variables on performance will be developed.

Example Calculations

Consider a pressure filter for which the following data have been collected:

Volume of sludge fed per run	= 10,000 gallons
Volume of filtrate produced per run	= 9,000 gallons
Feed suspended solids	= 40,000 mg/L (4 percent)
Filtrate suspended solids	= 6 mg/L
Cake solids concentration	= 400,000 mg/L (40 percent)

Sludge feed volume and filtrate volume per run are functions of cycle time and maximum operating pressures. The solids fed per filter run (dry weight basis) is calculated as follows:

Solids fed per run = (Volume of sludge fed)(Feed suspended solids)
= (10,000 gallons (3.785 L/gal)(40 g/L)
= 1514 Kg = 3335 lbs.

The solids lost per filter run is calculated as follows:

Solids lost per run = (Volume of filtrate)(Filtrate suspended solids)
= (9,000 gallons)(3.785)(0.6g/L)
= 20 Kg = 45 lbs.

TABLE 25

PRESSURE FILTRATION
PROCESS MONITORING REQUIREMENTS

Parameter	Frequency	Comment
1. Batch cycle times (minutes).	Per batch	To determine system performance.
2. Volume of sludge fed per batch (gallons or liters).	Per batch	To determine solids feed rate, solids capture, and solids yield.
3. Total and suspended solids in feed slurry (mg/L or percent by weight).	Per batch	See Comment 2.
4. Feed slurry back-pressure (psi).	Per batch	To determine pressure history during operation.
5. Machine hydraulic pressure (psi).	Per batch	To assess system operation.
6. Filtrate flowrate (gpm or L/min).	Weekly	To correlate filtrate solids to solids capture.
7. Filtrate suspended solids concentration.	Weekly	See Comment 6.
8. Total solids concentration of cake (mg/L or percent by weight.)	Per batch	To determine percent capture and solids yield.
9. Dosage rate for chemical conditions and filter aids (mg/L, ppm, or percent by weight)	Per batch	To determine conditioning requirements.
10. Feed sludge temperature (^{o}F or ^{o}C).	Per batch	Temperature affects solubility of particles.
11. Feed sludge pH.	Per batch	pH affects solubility of particles.

The solids yield for a single run is calculated as follows:

Solids yield = (Solids fed per run) - (Solids lost per run)
= 3335 - 45
= 3,290 lbs.

The solids capture for a single run is calculated as follows:

Solids capture (percent) = (Solids yield)/(Solids fed per run) x 100
= (3,290/3,335) x 100
= 98.7 %

Process Control Strategies

The operation and performance of pressure filters for sludge dewatering is determined by a relatively small number of variables, compared to other mechanical dewatering processes. Although control of the process may be manual, semi-automatic, or fully automatic, the basic operating cycle and machine related variables are the same.

A typical cycle begins with the closing of the filter, after which sludge is pumped into the press until it is essentially full of cake. Sludge pumping then continues with increasing back pressures and decreasing sludge flows. The end of the sludge feed step in the filter cycle is determined when back-pressures reach the designed maximum (usually 100 psi, but sometimes as much as 220-250 psi). To reach this point typically takes 20 to 30 minutes. The high back-pressure is then maintained for a period of usually one to four hours, during which time additional water is removed from the cake as filtrate. Based upon either time or filtrate flow rate (which becomes nearly zero), the filter cycle is ended by relieving the pressure, opening the filter, and removing the solids cake. The only real variation on this cycle is when a variable volume filter is used. In this case, the high-pressure holding time is much less, and it is followed by an additional step in

which diaphragms behind the filter media are expanded by high pressure air or water to force out water and further concentrate solids in the cake.

Therefore, the only machine variables that are under operator control are the time settings for each step in the filter cycle and, in the case of some machines, the operating back-pressures (which are determined by the sludge feed pumps). Cycle time is usually the main machine variable affecting filter yield. In rare cases, it may be necessary to select a different type of filter medium to improve performance, particularly if the sludge cake is not removed easily from the medium or high filtrate solids concentrations are a problem.

Of the process (non-machine) variables, the most obvious are those related to the sludge. The sludge characteristics that improve dewatering by vacuum filtration are also advantageous for pressure filtration. Because of the greater energy involved in pressure filtration, however, the sludge variables are considered to be less of a factor in dewatering performance.

However, the variable over which the operator can exercise complete control is chemical conditioning. The wide range of chemicals used in pressure filtration also are similar to those for vacuum filtration. Filter presses usually require a filter aid and/or a precoat material to reduce blinding and to facilitate release of the cake from the media during the unloading stage. Incinerator ash or diatomaceous earth are typical precoat materials that are added just before sludge charging.

Precoat application is a critical step in the batch operating cycle, and manufacturers' recommendations for mixing and applying precoat must be followed explicitly to achieve good results. A poor precoat can cause several problems, one of which is high solids in the filtrate. However, the most important reason for achieving a good precoat is to insure good solids cake release from the media. Otherwise, it will be necessary to wash the medium with high pressure water sprays after each batch to prevent media blinding and maintain performance. This step can

be extremely time consuming, in addition to defeating the whole purpose of filtration by diluting with water the cake solids that remain stuck on the media.

Other operating procedures include routine water washing of the filter media to prevent blinding and to maintain filter yield. Occasionally acid washing with dilute muriatic acid is necessary to remove calcium carbonate scale that forms on the media. It is also occasionally necessary to replace worn media, although this is usually only done after filter yields drop to the point that water and acid cleaning are no longer sufficient to maintain acceptable yields.

TYPICAL PERFORMANCE VALUES

Most sludges from metals finishing wastewater treatment dewater very well in pressure filters, provided proper precoat application and chemical conditioning are used. Typically, a solids cake from 30 to 50 percent by weight is achieved, with a solids recovery of 95 to 99 percent.

TROUBLESHOOTING GUIDE

The troubleshooting guide for the pressure filtration process is presented in Table 26. Major problem areas include filter blinding, improper sludge conditioning, and high cake moisture content. Both chemical and mechanical methods of solving these problems are considered.

TABLE 26
PRESSURE FILTRATION FOR DEWATERING
TROUBLESHOOTING GUIDE

PROBABLE CAUSE	CHECK OR MONITOR	REASON	CORRECTIVE ACTION
OPERATING PROBLEM 1: Low cake solids concentration (high moisture content in cake).			
1a. Filter cycle time too short.	- Operating records to correlate filtrate flow and cycle time with cake moisture content.	- To determine if optimum operating conditions have changed.	- Increase filter cycle time.
1b. Improper sludge conditioning.	- Chemical and filter aid feed systems and mixers.	- To determine if mechanical problems exist or if a dosage change is required.	- Repair any malfunctioning equipment or change dosage of either chemicals or filter aid and re-evaluate filter performance.
OPERATING PROBLEM 2: Cake discharge is difficult or incomplete.			
2a. Inadequate precoat on media.	- Precoat slurry mixing and pumping system.	- To determine if a mechanical problem exists or if precoat mix or application procedure should be changed.	- Repair any malfunctioning equipment or change either precoat mix or application procedure. Follow manufacturers' recommendations for initial changes.
2b. Improper sludge conditioning.	- See Item 1b.	- See Item 1b.	- See Item 1b.
OPERATING PROBLEM 3: Filter cycle time excessively long.			
3a. Feed solids concentration too low.	- Operation of upstream thickening process. Check solids feed rate with historical data.	- Inadequate thickening can result in an excessive time to build up solids cake.	- If possible, improve performance of upstream thickening operation to achieve higher feed solids; otherwise, see Item 3b.
3b. Improper sludge conditioning.	- See Item 1b.	- See Item 1b.	- See Item 1b.

TABLE 26
(Continued)
PRESSURE FILTRATION FOR DEWATERING
TROUBLESHOOTING GUIDE

PROBABLE CAUSE	CHECK OR MONITOR	REASON	CORRECTIVE ACTION
OPERATING PROBLEM 4: Frequent media blinding, failure to develop cake on media.			
4a. Inadequate precoat on media.	- See Item 2a.	- See Item 2a.	- See Item 2a.
4b. Initial sludge feed rate too high (where no precoat is used).	- Feed sludge pumping rates and correlate with previous performance.	- To establish whether lower pumping rates have previously resulted in less blinding and better cake formation.	- Keep initial feed rate low to develop cake slowly; or consider use of precoat if problems persist.
4c. Improper sludge conditioning.	- See Item 1b.	- See Item 1b.	- See Item 1b.
OPERATING PROBLEM 5: Pressures increasing during precoat application.			
5a. Filter media becoming blinded, possibly with carbonate scale.	- Filter media.	- To establish if blinding has occurred.	- Water wash filter media. Acid wash media to remove carbonate buildup.
5b. Improper sludge conditioning causing media blinding.	- See Item 1b. Also check for high moisture content in cake or increased filter cycle times.	- See Item 1b.	- See Item 1b.
5c. Improper precoat mix or feed procedure.	- See Item 2a. Also check manufacturer's recommended procedures for precoat application.	- See Item 2a.	- See Item 2a.
OPERATING PROBLEM 6: Solids cake sticks to conveying equipment after removal from filter.			
6a. Improper sludge conditioning.	- See Item 1b.	- See Item 1b.	- See Item 1b. Also may need to change to more inorganic chemicals (e.g. lime) or different filter aid material.

TABLE 26
(Continued)
PRESSURE FILTRATION FOR DEWATERING
TROUBLESHOOTING GUIDE

PROBABLE CAUSE	CHECK OR MONITOR	REASON	CORRECTIVE ACTION
OPERATING PROBLEM 7: Failure to form adequate seal between plates.			
7a. Plates out of alignment.	- Check alignment.	- See Probable Cause.	- Realign plates.
7b. Inadequate skimming.	- Check stay bosses.	- See Probable Cause.	- Adjust skimming of stay bosses.
7c. Foreign object preventing a good seal.	- Open press and inspect sealing faces for foreign objects.	- See Probable Cause.	- Remove foreign object.

SECTION 17

CENTRIFUGATION

INTRODUCTION

Centrifugation is a process used for concentrating sludges generated during wastewater treatment. Often, centrifuges are used in place of gravity thickeners. Centrifuges have also been installed, usually following a thickener, as dewatering devices. The difference between thickening and dewatering depends upon the final water content of the sludge. The product of thickening is still a fluid that can be pumped, while the product of dewatering is a cake that can be handled as a solid and is transported by conveyers and dumpsters. Whether a sludge needs to be thickened only or dewatered prior to disposal depends upon many factors. Similarly, the objective of centrifugation (whether for thickening or dewatering) will be different from one facility to the next, although the basic principles and operating procedures are the same.

THEORY OF OPERATION

Centrifugation works on the same principle as gravity settling and thickening, except that the centrifugal forces which cause the particles to settle are much greater than the force of gravity. In a clarifier or thickener, the suspended solids which are more dense than water sink to the bottom of the tank leaving clear liquid above. In centrifuges, a rotating bowl acts as a highly effective settling chamber. When sludge is introduced into the bowl and is thrown against the inside wall, it forms a pool or layer of liquid. The suspended solids in this pool move toward the wall, as a result of their greater density, and leave behind a layer of clear liquid called the centrate. The centrate then is

removed, leaving a thickened sludge or solids cake for further treatment or disposal. Since the same principle is involved as with other thickening devices, sludges that thicken poorly by gravity are generally more difficult to thicken and dewater by centrifugation. As is the case in gravity thickening, both polymers and chemical coagulants often are used to condition sludges prior to centrifugation.

DESCRIPTION OF EQUIPMENT

The method by which the centrate and solids are separated is the main difference between the many types of centrifuges used in wastewater treatment. The basic operating principles are the same for all, however. Three basic types of centrifuges have been used commonly for wastewater treatment applications in the metal finishing industry; the solid bowl decanter, the imperforate basket, and the disk-nozzle centrifuge. These will be discussed separately below.

Solid Bowl Decanter

The solid bowl decanter centrifuge, also sometimes called a scroll or conveyor centrifuge, is the most common type used for dewatering wastewater sludges. This type of centrifuge operates in a continuous or flow-through mode and consists of a rotating horizontal cylindrical bowl containing a screw type conveyor or scroll which also rotates, but at a slightly lower or higher speed than the bowl, as shown in Figure 31. The differential speed between the bowl and the conveyor is used to move the solids toward one end of the bowl for discharge. The bowl is usually a cylinder made of mild or stainless steel with a conical section at one end. The conical section is the discharge end for the sludge and serves as a dewatering beach or drying deck. Sludge enters the rotating bowl through a stationary feed pipe extending into the hollow shaft of the rotating conveyor and is distributed through ports in this hollow shaft into a pool within the rotating bowl.

There are two main types of solid bowl centrifuges. The most common is the counter-current type in which the solids cake and centrate

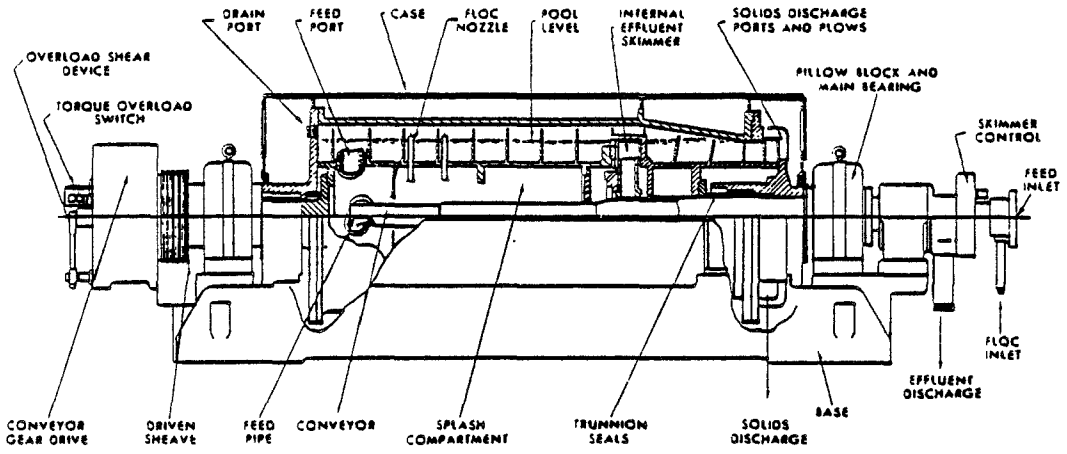

Figure 31. **Cross section of concurrent flow solid - bowl centrifuge.**

move toward opposite ends of the bowl for discharge. The centrate is decanted off the top of the liquid pool through a port or over a weir, the location of which can be adjusted to change the depth of the liquid within the bowl. In the other type of centrifuge, the concurrent flow type (Figure 31), the sludge slurry is introduced at the far end of the bowl from the dewatering beach and the sludge solids and centrate both flow in the same direction. The centrate is withdrawn by a skimming device or return tube located near the junction of the bowl and the beach. Clarified centrate then flows into channels inside the scroll hub and returns to the feed end of the machine where it is discharged over adjustable weir plates through discharge ports built into the bowl head.

Imperforate Basket Centrifuge

The imperforate basket centrifuge, also known as a knife-discharge centrifuge, is a semi-continuous feeding and solids discharging unit that rotates about a vertical axis, as shown in Figure 32. Sludge is fed into the bottom of the basket and sludge solids form a cake on the bowl walls as the unit rotates. The centrate is displaced over a baffle or weir at the top of the unit. Sludge feeding is continued either for a specific period of time or until the suspended solids in the centrate reach a predetermined concentration.

After sludge feeding is stopped, the centrifuge slows to about 70 rpm, and a plowing knife moves into position, either automatically or manually, to cut the sludge away from the walls; the sludge cake then drops through the open bottom of the basket. After plowing terminates, the centrifuge begins to accelerate and feed sludge again is introduced. At no time does the centrifuge actually stop rotating. Many units also have a skimming step which precedes plowing. A special skimmer nozzle swings into position to remove the low concentration solids which remain in the basket near the inside surface of the liquid pool. These are recycled back to an upstream process along with the centrate.

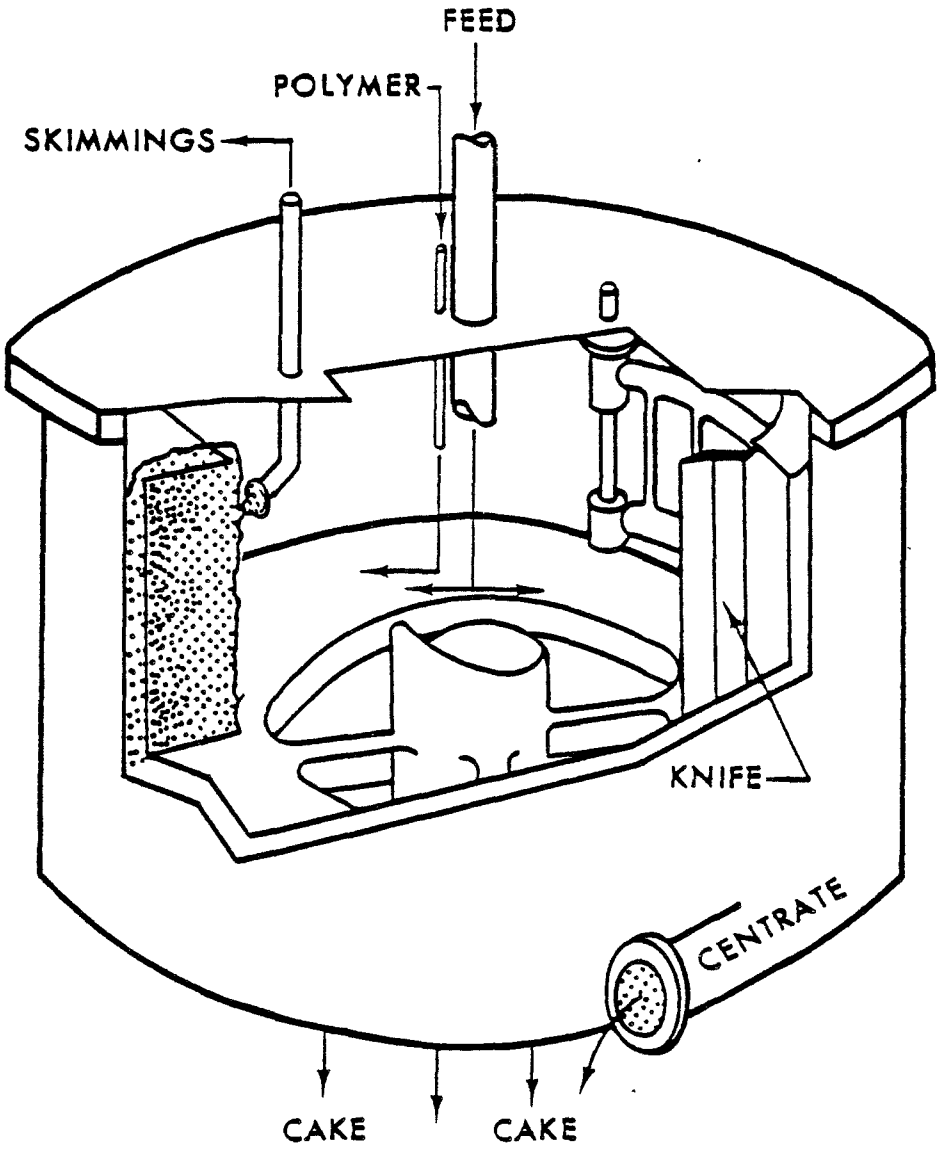

Figure 32. **Schematic diagram of a basket centrifuge.**

In smaller facilities, where the volume of sludge to be handled is less, centrifugation may be strictly a batch operation in which rotation stops completely after each batch is processed. In this case, operation is usually not automated and the equipment is somewhat simpler in design.

Although the cake solids concentration and yield are not as high for the basket centrifuge as for a solid bowl centrifuge, solids recovery is generally better and often less polymer and other conditioning chemicals are required. Obviously, the cake solids concentration must be considered as average solids content, since the solids content is maximum at the bowl wall and decreases toward the center.

Disk-Nozzle Centrifuge

The disk-nozzle centrifuge is a continuous-flow vertical bowl machine which contains a number of closely spaced disks against which the particulate solids settle, as shown in Figure 33. The feed slurry normally enters through the top although bottom feed is also possible, and passes down through a feedwell in the center of the rotor. An impeller within the rotor accelerates and distributes the feed slurry, filling the rotor interior. The heavier solids settle outward toward the circumference of the rotor under increasing centrifugal force. The liquid and the lighter particles flow inward through the cone-shaped disc stack. These lighter solids are settled out on the underside of the discs, where they agglomerate, slide down the discs, and migrate out to the nozzle region. The centrifugal action causes the solids to concentrate as they settle outward. At the outer rim of the rotor bowl, the high energy imparted to the fluid forces the concentrated material through the rotor nozzles.

Often, a portion of the thickened sludge discharge is recycled back into the concentrating chamber near the base of the rotor to increase the final concentration in the sludge and to help prevent plugging of the nozzles. In addition to providing a flushing action, the recycle also permits the use of larger nozzles which are less likely to plug.

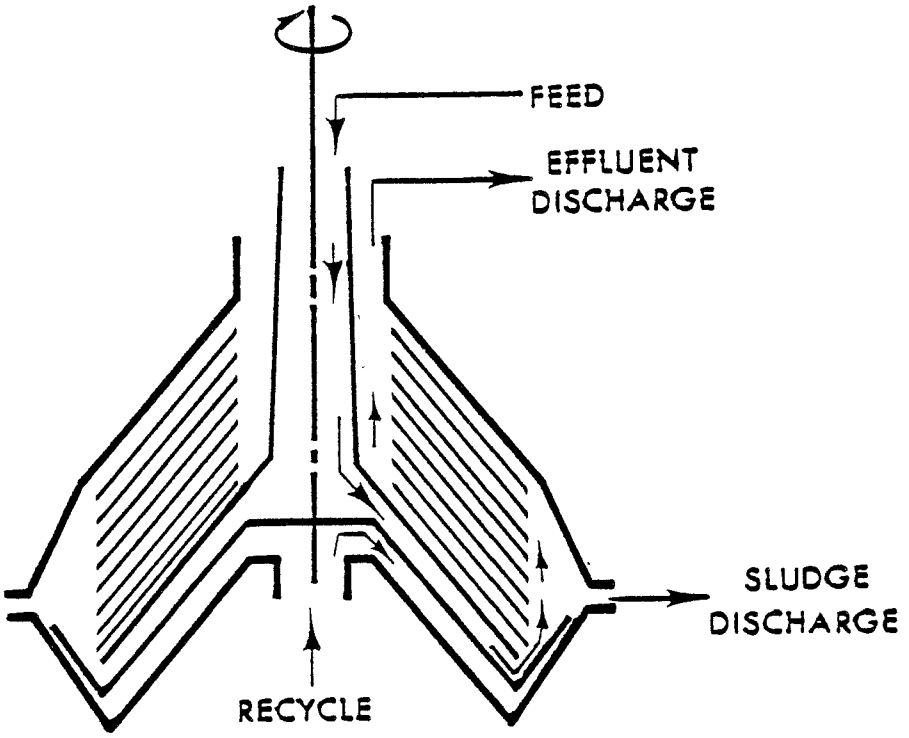

Figure 33. **Disc type centrifuge.**

Plugging or clogging of the nozzles or the space between disks (which are generally separated by only 1 to 2 mm) is the main reason that disk-nozzle centrifuges have not gained wider acceptance in wastewater treatment. However, for thickening sludges from the treatment of metal finishing wastes, which contain little or no fibrous or gritty material, they are gaining acceptance.

OPERATIONAL PROCEDURES

The purpose of centrifugation is to minimize both the water content of the thickened sludge or solids cake and the solids concentration in the centrate while maintaining sufficient machine throughput to prevent a buildup or accumulation of sludge in upstream treatment processes. Generally, efforts to increase the solids concentration result in a centrate of poorer quality, while improving centrate quality usually reduces the sludge or cake solids concentration. Acceptable limits on the solids content of the centrate are determined when the recycled centrate begins to interfere with the operation of other treatment processes or fine solids begin to build up to unacceptable levels in the sludge handling system. Although a high solids concentration and good centrate quality often can be achieved at the same time, to improve both may require that the machine throughput or solids yield be reduced and that the use of chemicals for conditioning be increased. There is a limit on how much the yield can be reduced, as solids must be removed for disposal as fast as they are generated or they will build up and affect the performance of other treatment processes. Similarly, there are limits on chemical usage since such usage represents a significant part of the total operating costs associated with centrifugation. Therefore, good centrifuge operation is a compromise between final solids concentration, centrate quality, solids loading or yield, and operating costs.

Process Monitoring

The main criteria used in evaluating centrifuge performance are concentration of the solids discharge, concentration of solids in the

centrate, solids capture or recovery, and solids removal or yield (or machine throughput). Of these the last two require some explanation.

Solids capture, also called solids recovery, is the mass ratio of cake (or thickened sludge) solids to the feed solids over equal sampling periods. A lower solids capture means that a greater fraction of the feed solids are lost to the centrate and are not part of the solids discharge. For a constant solids feed rate, the result is a higher concentration of solids in the centrate.

The solids yield (removal) refers to the amount of solids, on a dry weight basis, that can be removed by the centrifuge during a given period of time. As a long term average, the yield must equal or exceed the solids feed rate if sludge solids are not to accumulate in the treatment system.

In order to evaluate centrifuge performance and diagnose problems, a complete record of several operating parameters must be kept. These are listed in Table 27.

The information listed in Table 27 should be recorded routinely, along with machine operating conditions such as bowl speed, weir settings or pool depth, sludge recycle rate, etc. It is particularly important that any changes in performance or operating conditions be recorded along with the time that they occur.

Example Calculations

Example calculations of operating parameters are presented below. Consider a continuous solid bowl centrifuge operation for which the following data have been collected:

Feed sludge flow rate	=	40 gpm
Centrate flow rate	=	36 gpm
Feed suspended solids	=	40,000 mg/L (4.0 percent)
Centrate suspended solids	=	2,250 mg/L (0.23 percent)

TABLE 27

CENTRIFUGATION
PROCESS MONITORING REQUIREMENTS

Parameter	Frequency	Comment
1. Sludge flowrate or volume.	Daily	To determine solids feed rate.
2. Sludge suspended solids concentration.	Daily	To determine solids feed rate.
3. Dewatered cake suspended solids concentration.	Daily	To determine centrifugation dewatering performance.
4. Dewatered cake volume.	Daily	To determine volume of cake to be disposed.
5. Centrate flowrate.	Weekly	To determine solids capture.
6. Centrate suspended solids concentration.	Weekly	To determine solids capture.
7. pH, Temperature	Daily	To evaluate effects of pH and temperature.
8. Polymer type and dosage.	Weekly	To determine conditioning requirements.

Solids cake concentration	=	350,000 mg/L (35 percent)
Polymer dosage rate	=	2 lb/ton
Concentration of polymer feed	=	1.0 percent

The solids feed rate (dry solids fed to centrifuge per hour) is calculated as follows:

Solids Feed Rate = (feed sludge flow rate) x (feed suspended solids)

= (40 gpm)(60 min/hr)(3.785 L/gal)x(40 g/L)

= 363 kg/hr = 800 lb/hr

Solids removed (dry solids per hour) is calculated as follows:

Solids removed = (feed solids mass applied) - (centrate solids mass)

= (800 lb/hr) - (2.25 g/L)(lb/454g)(36gpm)(3.7854 L/gal)(60min/hr)

= 760 lb/hr

Solids capture or solids recovery is calculated as follows:

Solids Capture = (760)/(800) x 100 = 94.9 percent

Process Control Strategies

The operation and performance of a centrifuge is determined by a number of variables that can be related either to the machine itself (machine variables) or the specific sludge thickening or dewatering application (process variables). Although these variables differ for various types of centrifuges, many are of general importance. Among them are the following.

Machine Variables	Process Variables
Centrifuge Design	Sludge Characteristics
Bowl Speed	Chemical Addition
Pool Depth	Solids Concentration
Conveyor Speed	Solids Feed Rate
	Temperature
	pH
	Recycle of Sludge

These variables and the effect that these variables have on solids recovery and cake solids concentration are presented in Table 28.

Machine Variables--

Some of the most important machine variables are fixed by the centrifuge design and are not under operator control. Among these are the bowl length to diameter ratio, bowl angle or slope of the dewatering deck, scroll or conveyor design, flow patterns (concurrent or counter-current), disk spacing, and nozzle diameter. Although important as design choices, a detailed discussion of these variables and their effects on the process will not be presented in this manual.

The rotational speed of the centrifuge is one of the most important factors affecting performance since centrifugal force speeds up the sedimentation process. An increase in bowl speed provides more gravity-settling force, thus providing greater clarification of the centrate and compaction of the solids. In solid bowl decanters, greater centrifugal forces also can help to squeeze water out of the sludge on the drainage deck, thereby producing a drier solids cake. Sometimes, higher bowl speeds can reduce polymer usage. If these advantages outweigh the increased power costs, operation at higher speeds can be beneficial.

There are problems with increasing bowl speeds, however. Higher speeds sometimes result in shearing of the sludge floc. Since smaller particles settle more slowly, higher bowl speeds can result in a higher concentration of suspended solids in the centrate. This problem can be avoided largely in machines where coagulant aids are added internally

TABLE 28
SUMMARY OF OPERATIONAL VARIABLES AFFECTING
CENTRIFUGE PERFORMANCE

Variable	Effect of increase in variable on	
	% Solids Recovery	Cake Solids Concentration
Machine Variables		
Bowl Speed	Increase	Increase
Pool Depth	Increase	Decrease
Scrolling Speed	Decrease	Decrease
Process Variables		
Feed Rate	Decrease	Increase
Feed Concentration	Decrease	Increase
Temperature	Increase	Increase
Chemical Addition	Decrease	Increase
*Sludge Recycle	Decrease	Increase

* Disk-nozzle centrifuges only.

into the bowl and flocculation occurs after the solids are up to the bowl speed. Another problem with higher speeds, especially in solid bowl centrifuges with a conveyor or scroll, is that tremendous pressures are set up between the solids and the surfaces of scroll and bowl, tending to lock these two parts together. Further, with abrasive sludges, high friction and costly wear result. Some sludges, though not especially abrasive, have poor sliding characteristics and resist conveying. This resistance can impose high loads on the scroll and on the gear unit which drives it. Therefore, final adjustment of bowl speed must be a compromise between degree of clarification, degree of cake dryness, chemicals used, and costs of maintenance and power. Because of these and other complicating factors, bowl speed is not normally varied on most centrifuge models once a centrifuge is installed.

Pool depth affects the performance of both conveyor and basket centrifuges, while disk-nozzle centrifuges usually are designed to operate completely filled without a variable pool depth. Settling theory says that the best clarification (or solids capture) occurs when liquid depths are shallow, since the solid particles have a shorter distance to travel to be separated from the liquid. However, experience has shown there to be a limit to how shallow the pool can be and still maintain good solids capture. Too shallow a pool results in a high linear velocity through the centrifuge, a condition which causes turbulence that resuspends settled particles and prevents settling of very fine particles. In conveyor type centrifuges, the turbulence caused by the scroll also has more adverse effect on settleability when the pool depth is shallow. Since the residence time within the centrifuge is shorter when the pool depth is shallower, less time is available for flocculation to occur. This also can result in poorer centrate quality.

There are limits to how deep the liquid pool in a centrifuge can be, however. As settling theory predicts, increasing the depth too much can also cause a low solids capture and poor centrate quality since the particles must settle through a greater distance to be removed. There are also cases in which a shallow pool is desirable. In a solid bowl conveyor type centrifuge, lowering the pool exposes more of the drainage

deck or beach area, and increases the time available for dewatering. This condition results in a drier solids cake.

With most centrifuges, pool depth is more easily changed than bowl speed, but still requires several hours of labor and down-time. Therefore, other remedies usually are tried first when a problem exists.

In solid bowl decanter centrifuges, the conveyor or scroll rotates at a slightly different speed (either faster or slower) than the bowl. This speed differential can normally be varied by adjusting gear ratios manually while the machine is not running. Some centrifuges are equipped with an automatic backdrive, making the differential speed relatively easy to change. Usually the pool depth is fixed in such machines. Conveyor speeds normally are designed or adjusted to the minimum that still provides sufficient conveying capacity.

Increasing the differential between the bowl speed and the scroll speed normally results in a wetter sludge cake and poorer solids recovery because of increased turbulence and reduced solids residence time. However, the machine throughput or yield is increased; that is, more sludge can be processed in a given period of time. A reduction in differential speed reduces turbulence inside the pool, yielding a better quality centrate and a drier cake. Differential speed reduction also reduces the rate of wear on the conveyor blades when poorly degritted sludges are handled. The main disadvantage is that machine throughput is reduced.

Operating at too low a differential speed can cause the pile of solids formed in front of the scroll conveyor blade to increase in overall height such that it infringes on the clarified liquid area. This condition may result in the skimming of some fine solids from the top of the cake pile to the centrate, thereby lowering solids capture. At very low differentials, it is even possible to plug a centrifuge with solids.

Process Variables--

Among the process-related variables, the most basic are those associated with the sludge itself. The factors that influence settling and gravity thickening also affect centrifugation. Among these are particle size, shape, and density, viscosity of the liquid, and consistency of the sludge. These variables are generally not under direct control of the operator, but simply result from optimizing upstream treatment processes. In some cases, changes in the operation of an upstream process can affect the thickening and dewatering properties of the sludge generated without reducing performance.

Often, polymers or other chemical conditioners can be used to improve the characteristics of a sludge prior to centrifugation. These polymers generally work by promoting flocculation of the sludge solids, thereby increasing solids capture. Usually flocculating agents are required to achieve an acceptable centrate quality. Although polymers can sometimes improve the compatability of a sludge, their use in centrifuges generally results in a wetter solids cake. The wetter cake results because the additional particles that are captured are very fine and their presence in the solids cake makes it more difficult for the entrapped water to be released. Jar tests are used to select the best polymers and to determine approximate dosage levels, after which operating experience is required to optimize polymer usage. Very small changes in sludge properties sometimes can require that polymer dosages be changed and can occasionally even necessitate the use of different types or combinations of polymers. In addition to wasting money, adding too much polymer (overdosing) can hurt performance.

The solids concentration in the sludge feed can affect both solids capture and cake dryness. A higher feed concentration generally results in lower solids capture and higher concentrations of suspended solids in the centrate. However, depending upon the concentration range, there are some sludges which show better clarification at higher solids concentrations. The concentration of solids in the feed slurry can also affect the optimum coagulant dose, and jar tests should be performed whenever the feed concentration changes significantly. The other effect

of higher solids concentrations in the feed is to produce a drier sludge cake. If a drier cake is an objective of centrifuge operation, changes in the operation of upstream treatment steps which affect sludge concentration, such as clarification and thickening, can improve centrifuge performance.

The rate at which sludge is fed to a centrifuge is important. When the volume of sludge centrifuged during a given period of time is increased, the residence time within the centrifuge is decreased and more solids are lost in the centrate. However, a higher feed rate sometimes can result in a drier cake since the additional solids lost in the centrate are fines which tend to entrap water within the cake. When centrifugation is not performed on a continuous basis, taking a longer period of time to centrifuge a batch of sludge can improve performance and possibly can reduce chemical requirements for coagulation. In facilities in which centrifugation is a continuously operated process, the feed rate can only be decreased by increasing the concentration of the sludge feed.

Recycle of concentrated solids usually is performed only in disk-nozzle type centrifuges where several functions are served. First, recycle permits control over the solids residence time in the centrifuge and helps to optimize operation under equilibrium conditions. If the feed rate changes, the recycle rate can be changed accordingly to maintain the required solids residence time to achieve the desired degree of solids concentration. Second, the use of recycle helps keep the velocities high through the concentrating section so that the nozzles do not become plugged. In fact, some centrifuges are designed with larger nozzles (to prevent plugging) which require that recycle be used in order to achieve the necessary solids residence times. The third reason for recycle or for changing the recycle rate is to provide a longer residence time and thereby achieve even greater concentration of the sludge solids.

Another process variable affecting centrifugation is temperature. As is the case in gravity settling and thickening, an increase in sludge temperature reduces the viscosity of the liquid and results in better centrifuge performance since solid particles settle faster. Although temperature is not usually a controlled variable, it is of importance if seasonal changes affect the temperature of the sludge fed to a centrifuge. For example, poorer solids capture and a wetter cake can be expected during winter months when sludge temperatures drop.

Changes in either or machine or process-related variables generally result in changes in centrifuge performance. Some factors which affect performance are not subject to change, such as those related to centrifuge design or sludge thickening and dewatering characteristics. Of the variables which can change, some are used in controlling centrifuge operation while others (such as temperature and feed concentration) may depend upon the operation of upstream treatment processes. The typical effects of these variables on performance are summarized in Table 23. It should be noted that these effects only apply over normal operating ranges when one variable is changed at a time. Generally predictions cannot be made as to the effects of changing several variables at once.

TYPICAL PERFORMANCE VALUES

Two factors must be considered when referring to typical performance values for centrifugation of sludges generated during treatment of metals finishing wastewater. First is the type of sludge. If sodium hydroxide is used for pH adjustment to precipitate metal hydroxides, a light, slimy, and relatively difficult to dewater sludge will result. When lime is used, the amount of excess lime determines the dewatering characteristics of the sludge. When very little or no excess lime is added, most of the sludge formed will be metal hydroxides. If considerable excess lime is used, a large amount of calcium carbonate will be present in the sludge, making it heavier and more easily dewatered.

The second factor to consider is the objective of centrifugation. Most often, centrifuges are used for dewatering and are sized to give a

high solids concentration cake. Sometimes, however, centrifuges are intended to function as thickeners prior to final dewatering by another process. This is especially common when disk-nozzle centrifuges are used. The product of centrifugal thickening is still a pumpable liquid, rather than a solids cake.

Table 29 gives some typical applications and performance values for different types of centifuges applied to both metal hydroxide and lime carbonate type sludges.

TROUBLESHOOTING GUIDE

The problems which are commonly associated with centrifuge operations have been summarized in the form of a troubleshooting guide in Table 30. This is a general guide and some specific types or brands of centrifuges may be subject to unique operating problems which usually are covered in the manufacturer's literature.

The most important fact to remember regarding centrifuge operation is that all of the machine and process variables which have been discussed are interrelated in some way. Therefore, when evaluating the effect of any one variable, care must be taken to insure that all others remain unchanged. Otherwise, the cause of a particular problem (or its solution) cannot be determined with certainty.

TABLE 29
TYPICAL PERFORMANCE VALUES FOR CENTRIFUGAL THICKENING AND DEWATERING

Centrifuge Type/Sludge Type	Feed Solids Concentration (%)	Cake Solids Concentration (%)	Solids Recovery (%)	Polymer Dosage (lb. per dry ton)
Solid Bowl (Scroll)				
Metal Hydroxide	0.5-4	15-45	80-95	0-10
High $CaCO_3$		2-8	90-99	20-50
Imperforate Basket				
Metal Hydroxide	0.5-4	10-30	80-95	0-5
High $CaCO_3$		2-8	90-99	15-45
*Disk-Nozzle				
Metal Hydroxide	0.2-1	1-5	85-90	0-10
High $CaCO_3$	0.5-2	2-10	90-95	0-10

*Generally used only for thickening.

TABLE 30
CENTRIFUGATION TROUBLESHOOTING GUIDE

PROBABLE CAUSE (Centrifuge Type)	CHECK OR MONITOR	REASON	CORRECTIVE ACTION
OPERATING PROBLEM 1: Poor centrate quality - low solids recovery.			
1a. Improper chemical dosage. (All types)	- Chemical addition system.	- Setting may be wrong or equipment malfunctioning. If neither, sludge characteristics may have changed.	- Repair or reset equipment or perform jar tests to establish new polymer dosage.
1b. Feed rate too high. (All types)	- Flow data records and performance.	- High flows can reduce detention times. Compare with period of good operation to see if this is the case.	- Reduce flow to centrifuge or reduce sludge recycle.
1c. Feed solids concentration too high. (All types)	- Check feed solids against previous values.	- Determine if good operation has been achieved at the same high feed solids concentration.	- Dilute sludge feed or reduce flow rate.
1d. Pool depth setting wrong.(Solid bowl, basket)	- Check weir or effluent port position and compare with operating records.	- Generally, poor solids capture results from too shallow a pool depth, but not always. Compare with previous performance.	- Adjust weir or port settings.
1e. Improper speed differential between bowl and conveyor.(Solid bowl)	- Differential speed setting and operating records. Excessive build-up of solids in bowl.	- Probably too great a differential causing turbulence in liquid pool. If solids build-up is great, speed differential may be too small.	- Adjust differential speed.
1f. Worn or damaged conveyor flights. (Solid bowl)	- Vibration or unusual noise; excessive build-up of solids in bowl.	- Build-up of solids causes conveyor entrainment into centrate discharge.	- Repair or replace solids conveyor.

TABLE 30
(Continued)
CENTRIFUGATION TROUBLESHOOTING GUIDE

PROBABLE CAUSE	CHECK OR MONITOR	REASON	CORRECTIVE ACTION
1g. Improper bowl speed.(All types)	- Check bowl speed and operating records.	- Insufficient speed results in poor solids capture.	- Increase bowl speed or repair or replace malfunctioning equipment.
1h. Solids discharge line or nozzle plugged.(Disk-nozzle, Solid bowl)	- Check solids discharge line and nozzle for foreign objects and low flow.	- Low sludge discharge results in poor solids capture.	- Unplug solids discharge line or nozzle.
OPERATING PROBLEM 2: *Cake or sludge discharge too wet.*			
2a. Improper chemical dosage.(All types)	- Chemical addition system and chemical flow rate.	- Setting may be wrong or equipment malfunctioning.	- Repair equipment or adjust dosage. Run jar tests to determine dosage.
2b. Feed rate too high. (All types)	- Flow and performance data.	- High flows reduce retention time. Compare with period of good operation.	- Reduce flow to centrifuge or increase sludge recycle.
2c. Feed solids concentration too low.(All types)	- Solids concentration and operating records.	- Higher feed solids usually give a drier cake.	- Determine if thickened sludge can be obtained from previous treatment steps.
2d. Pool depth too great.(Solid bowl, Basket)	- Weir or effluent put setting.	- Shallower pool exposes more beach or drying deck.	- Adjust weir or put settings.
2e. Improper bowl speed. (All types)	- Check bowl speed and operating records.	- Insufficient speed results in poor sludge compaction.	- Increase speed or repair/replace malfunctioning equipment.
2f. Centrate outlet partially plugged. (Solid bowl, Disk-nozzle)	- Check outlet for foreign objects.	- Low centrate flow results in thinner sludge discharge.	- Clean outlet port.

TABLE 30
(Continued)
CENTRIFUGATION TROUBLESHOOTING GUIDE

PROBABLE CAUSE	CHECK OR MONITOR	REASON	CORRECTIVE ACTION
OPERATING PROBLEM 3: High torqe alarm.			
3a. Feed rate too high. (All types)	- Flow records.		- Reduce flows.
3b. Feed solids too high.(All types)	- Solids data records.		- Dilute sludge or reduce flow rate.
3c. Foreign material in machine.(All types)	- Inspect interior.		- Remove foreign material.
3d. Gear unit mis-aligned.(All types)	- Vibration.		- Correct alignment.
3e. Faulty bearing, gear.(All types)	- Inspect gear unit.		- Replace faulty parts.
OPERATING PROBLEM 4: Excessive vibration.			
4a. Improper lubrication. (All types)	- Check lubrication system.		- Correct lubrication.
4b. Improper adjust-ment of vibration isolators.(All types)	- Vibration isolators.		- Adjust isolators.
4c. Discharge funnels may be contacting centrifuge.(All types)	- Position of funnels.		- Reposition slip joints at funnels.
4d. Portion of conveyor flights may be plugged with solids causing imbalance. (Solid bowl)	- Interior of machine.		- Flush out centrifuge.
4e. Gear box improperly aligned.(All types)	- Gear box alignment.		- Align gear box.
4f. Pillow block bearings damage. (All types)	- Inspect bearings.		- Replace bearings.

TABLE 30
(Continued)
CENTRIFUGATION TROUBLESHOOTING GUIDE

PROBABLE CAUSE	CHECK OR MONITOR	REASON	CORRECTIVE ACTION
4g. Bowl out of balance. (All types)			- Return rotating parts to manufacturer for rebalance.
4h. Parts not tightly assembled. (All types)			- Tighten parts.
4i. Uneven wear of conveyor. (Solid bowl)	- Inspect conveyor.		- Resurface, rebalance.
OPERATING PROBLEM 5: Sudden increase in power consumption.			
5a. Contact between bowl and accumulated solids in centrifuge case.(All types)	- Solids plows; look for polished area on outer bowl.		- Apply hard surfacing to to areas with wear.
5b. Effluent pipe plugged.(All types)	- Check for free discharge of solids.		- Clear effluent pipe.
OPERATING PROBLEM 6: Gradual increase in power consumption.			
6a. Conveyor blade wear. (Solid bowl)	- Conveyor condition.		- Resurface blades.
OPERATING PROBLEM 7: Spasmodic, surging solids discharge.			
7a. Pool depth too low. (Solid bowl)	- Plate dam position.		- Increase pool depth.
7b. Conveyor helix rough. (Solid bowl)	- Improper hard surfacing or corrosion.		- Refinish conveyor blade areas.
7c. Feed pipe (if adjustable) too near drainage deck.(Solid bowl)			- Move feed pipe to effluent end.

TABLE 30
(Continued)
CENTRIFUGATION TROUBLESHOOTING GUIDE

PROBABLE CAUSE	CHECK OR MONITOR	REASON	CORRECTIVE ACTION
7d. Machine vibration excessive (Solid bowl, Disk-nozzle)	- See Item 4.		- See Item 4.
OPERATING PROBLEM 8: Centrifuge shuts down (or will not operate).			
8a. Blown fuses. (All types)	- Fuses.	- Overload or weak fuse. May be wrong size fuse.	- Replace fuses, flush machine. If fuse blows on start-up, mechanical inspection is required.
8b. Overload relay tripped. (All types)	- Overload relay.		- Flush machine, reset relay. If relay trips on restart, mechanical inspection is required.
8c. Motor overheated, thermal protectors tripped.(All types)	- Thermal protectors.	- Insufficient ventilation. High air temperature.	- Flush machine, reset thermal protectors. Check fan on motor.
8d. Torque control tripped.(All types)	- See Item 3. Check torque indicator.	- Torque indicator may be stuck or defective.	- Replace or repair.
8e. Vibration switch tripped.(All types)	- See Item 4.	- Switch may be defective.	- Replace.

REFERENCES

1. USEPA. Environmental Regulations and Technology: The Electroplating Industry, EPA 625/10-80-001, 1980. 44 pp.

2. USEPA. Environmental Pollution Control Alternatives: Centralized Waste Treatment Alternatives for the Electroplating Industry, EPA 625/5-81-017, 1981. 36 pp.

3. USEPA. Summary Report: Control and Treatment Technology for the Metal Finishing Industry, Ion Exchange, EPA 625/8-81-007, 1981. 46 pp.

4. USEPA. Summary Report: Control and Treatment Technology for the Metal Finishing Industry, Sulfide Precipitation, EPA 625/8-80-003, 1980. 54 pp.

5. USEPA. Summary Report: Control Technology for the Metal Finishing Industry, Evaporators, EPA 625/8-79-002, 1979. 42 pp.

6. USEPA. Environmental Pollution Control Alternatives: Economics of Wastewater Treatment Alternatives for the Electroplating Industry, EPA 625/5-79-016, 1979. 72 pp.

7. USEPA. Summary Report: Control and Treatment Technology for the Metal Finishing Industry, In-Plant Changes, EPA 625/8-82-008, 1982. 30 pp.

8. USEPA. Methods for Chemical Analysis of Water and Wastes, EPA 600/4-79-020, 1979.

9. American Public Health Association. Standard Methods for the Examination of Water and Wastewater, 14 ed., American Public Health Association, Washington, D.C., 1975. 1193 pp.

10. Federal Register, 48(137), 32462-32488 (July 15, 1983).

11. Tretolite Industrial Bench Testing Procedures Manual, Tetrolite Corporation, St. Louis, MO.

12. Cherry, K. F. Plating Waste Treatment. Ann Arbor Science Publishers, Inc., Ann Arbor, Michigan, 1982. 324 pp.

13. Patterson, J. W. Technology and Economics of Industrial Pollution Abatement. IIEQ No. 76/22, Illinois Institute for Environmental Quality, Chicago, Illinois, 1976. 614 pp.

14. Water Pollution Control Federation. Operation of Wastewater Treatment Plants, Manual of Practice No. 11, Water Pollution Control Federation, Washington, D.C., 1976.

15. Snoeyink, V. L. and D. Jenkins. Water Chemistry, John Wiley and Sons, Inc., New York, NY, 1980.

16. Shinskey, F. G. pH and pIon Control in Process and Waste Streams, John Wiley and Sons, Inc., New York, NY, 1973.

17. Scott, M. C. Sulfex® - A New Process Technology for Removal of Heavy Metals from Waste Streams. In: Proceedings of the 32nd Industrial Waste Conference, Purdue University, Ann Arbor Science Publishers, Inc., Ann Arbor, Michigan, 1977. pp. 622-629.

18. Thomas, M. J., and T. L. Theis. Effects of Selected Ions on the Removal of Chrome (III) Hydroxide. Journal Water Pollution Control Federation, 48(9):2032-2045, 1976.

19. Patterson, J. W. Effect of Carbonate Ion on Precipitation Treatment of Cadmium, Copper, Lead, and Zinc. In: Proceedings of the 36th Industrial Waste Conference, Purdue University, Ann Arbor Science Publishers Inc., Ann Arbor, Michigan, 1975. pp. 132-150.

20. Patterson, J. W., J. J. Scala, and H. E. Allen. Heavy Metal Treatment by Carbonate Precipitation. In: Proceedings of the 30th Industrial Waste Conference, Purdue University, Ann Arbor Science Publishers Inc., Ann Arbor, Michigan, 1975. pp. 132-150.

21. Weber, W. J., Jr. Physiochemical Processes for Water Quality Control. John Wiley and Sons, Inc., New York, New York, 1972. 640 pp.

22. Water Pollution Control Federation. Wastewater Treatment Plant Design, Manual of Practice 9, Water Pollution Control Federation, Washington, D.C., 1977. 560 pp.

23. Great Lakes - Upper Mississippi River Board of State Sanitary Engineers. Recommended Standards for Sewage Works, Health Education Service, Inc., Albany, New York, 1978.

24. Sexsmith, D. R., E. A. Sayinelli, and J. S. Beecher. The Use of Polymers for Water Treatment. Ind. Water Eng., Dec. 1969, pp. 18-24.

25. The American City and County, Dec. 1976, pp. 45-48.

26. BIF Technical Information, Polyelectrolyte Coagulant Aids and Flocculants, Dry and Liquid, Handling and Application, April 1971.

27. Adorjan, L. A. Some Aspects of Flocculation. Coal Preparation, Sept./Oct. 1968, pp. 171-176.

(This page left blank intentionally.)

APPENDIX A

LITERATURE REVIEW

This appendix consists of a computer literature search performed on the Lockheed Dialog™ system. Two data files were accessed, after a preliminary scan indicated that they contained the most references for the applicable keywords. These files were the Metals Index (File 32) and the Pollution Abstract Index (File 41). A total of 289 references are contained herein; 47 are from the Metals Index and 247 are from Pollution Abstract Index.

784136 81-580849
Routes to Metals Recovery From Metal Finishing Sludges.
Mehta, A
Third Conference on Advanced Pollution Control for the Metal Finishing Industry, Kissimmee, Fla., 14-16 Apr. 1980
76-79
Publ Industrial Environmental Research Laboratory, U.S. Environmental Protection Agency, Cincinnati, Ohio 45268, 1981
Language: ENGLISH
Document Type: BOOK
Process wastewaters from the electroplating industry contain cyanides and heavy metals that must be treated because of environmental impact and discharge regulations. One of the treatment technologies already in wide use and more likely to be installed is neutralization and precipitation technology which destroys the cyanide and removes the heavy metals as hydroxides. Various ways to recover metals from metal finishing sludges are discussed along with economical considerations. The concept of a Centralized Waste Treatment Facility (CWTF) is presented as an alternate to individual metal recovery treatments. Other topics discussed are: pyrometallurgical treatments; hydrometallurgical treatments; commonly used leaching reagents; ion exchange; solvent extraction; cementation and electrolysis.7 refs.--G.G.M.
Descriptors: Electroplating; Sludge disposal; Pollution abatement; Copper, Recovering; Zinc, Recovering
Section Heading. 58 (METALLIC COATING) Journal Announcement: 8110

784034 81-570604
Stabilization of Heavy Metal Wastes by the Soliroc Process.
Rousseaux, J M ; Craig Jr, A B
Third Conference on Advanced Pollution Control for Metal Finishing Industry, Kissimmee, Fla., 14-16 Apr. 1980
70-75
Publ Industrial Environmental Research Laboratory, U.S. Environmental Protection Agency, Cincinnati, Ohio 45268, 1981
Language: ENGLISH
Document Type: BOOK
The metal finishing industry generates a variety of waste materials that are potentially hazardous, i.e. electroplating process residues, pickling acids and wastewater treatment sludges containing cyanides and heavy metals. Landfilling and ponding are two common methods for disposal of these wastes but very little precaution is taken to prevent ground water contamination. Various fixation techniques have been studied to chemically bind inorganic residues and sludges; these include precipitation, encapsulation, asphalting, cementation and other similar stabilization processes. An evaluation of one fixation process, the Soliroc process, developed by Cemstobel in Brussels, Belgium, is discussed. The evaluation was designed to provide experimental data and to establish a data base for future pilot scale work.--G.G.M.
Descriptors. Waste disposal; Pollution abatement; Pickling; Electroplating
Section Heading: 57 .(FINISHING) Journal Announcement. 8110

764901 81-420522
Process for Recovering Molybdenum and Tungsten From Mining Wastewater.
Ramirez, E R ; Ramadoral, G
Dravo Corp
Patent: US4219416 ,U.S.A . 29 June 1978
Off. Gaz. ,26 Aug. 1980,
Document Type: PATENT
A method for removing heavy metals selected from the group consisting essentially of Mo, tungsten, Cr and arsenic from wastewater in their anionic forms as molybdates, tungstates, chromates and arsenates comprises the steps of adding to a wastewater having a pH of approx 2.0-6.0 a trivalent metal ion selected from the group consisting of ferric, Co, Al, Cr or Re to the wastewater in an amount sufficient to provide 6-20 ppm trivalent metal cations/ppm of total molybdate, tungstate, chromate and arsenate ions to form insoluble heteropoly molybdate, tungstate, chromate and arsenate salts within the wastewater; adding a hydroxyl providing base to raise the pH yet maintain it within the acidic range to form a gelatinous precipitate; subjecting the wastewater to a dense zone of microbubbles to form embryo flocs from the insoluble salts; adding an anionic polyelectrolyte polymer flocculant to the wastewater; and subjecting the wastewater to an additional dense zone of microbubbles to form from the embryo flocs full flocs that are buoyed to the surface.
Descriptors: Molybdenum, Recovering; Tungsten, Recovering; Chromium, Recovering; Solvent extraction; Flocculating
Section Heading: 42 .(EXTRACTION AND SMELTING) Journal Announcement: 8105

724528 80-580612
Removal of Copper, Nickel, Zinc, Cadmium and Cyanide From Plating Wastewater by Electroflotation.
Poon, C P C
Management and Control of Heavy Metals in the Environment, London, England, Sept. 1979
572-575
Publ: Commission of the European Communities, Boite Postale 1003, Luxembourg, 1979
Language· ENGLISH
Document Type. BOOK
The use of an electroflotation process to remove heavy metals from plating wastewaters was investigated. Cathodic generation of hydroxides raised the pH and reduced the metal solubility, resulting in metal precipitation which was carried up to the surface by the rising gas bubbles. Copper, Ni, Zn and Cd were successfully removed, with the effluents meeting U S standards. Free oxygen and ozone produced at the anode oxidized Ni in solution to form nickel oxides which precipitated out. Hypochlorite and Cl gas oxidized cyanide and liberated heavy metals from the cyanide--metal complexes which preceded alkaline precipitation. Performance equations were developed which indicated the relative significance of the effect of each operating variable on treatment performance and suggested how the process could be better modified to treat plating wastewaters of different characteristics.--AA
Descriptors: Electroplating; Flotation; Pollution abatement; Copper, Recovering; Nickel, Recovering; Zinc, Recovering; Cadmium, Recovering
Section Heading 58 .(METALLIC COATING) Journal Announcement: 8008

724527 80-580611
Laboratory Scale Treatment of Nickel-Bearing Industrial Effluent.
Chin, K K ; Tay, J H
Management and Control of Heavy Metals in the Environment, London, England, Sept. 1979
567-571
Publ. Commission of the European Communities, Boite Postale 1003, Luxembourg, 1979
Language. ENGLISH
Document Type: BOOK
A laboratory scale study was carried out for Ni-bearing wastes from the electroplating industry. The wastewater in general contained approx 80 mg/l of Ni. Chemical precipitation using approx 5 mg/l of lime or alum resulted in 80% removal of the metal. Barium sulfide precipitation produced excellent settling flocs and 100% removal of th metal at pH > 9. Polymer dosage of up to 0.1 mg aided the precipitation process. Ion exchange using amberlite IR-120 was able to remove 100% of the ions present. Cost for treating 500 000 kg/day of this waste, using chemical precipitation followed by ion exchange with pH adjustment, was dollars U.S. 0 68/m3 water treated.--AA
Descriptors: Nickel plating; Wastes; Pollution abatement
Section Heading: 58 .(METALLIC COATING) Journal Announcement: 8008

703024 80-720019
Eleventh Mid-Atlantic Industrial Wastes Conference.
Pennsylvania State University, Pa., 15-17 July 1979
Pp 244, 81/4 x 103/4 in., Illustrated
Publ: Pennsylvania State University, Philadelphia, Pa., 1979
Language: ENGLISH
Document Type: BOOK
Contents include: J.L. FALK, "Water Pollution Abatement Moore Co."; B.D. GILLEN, "Removal of Dilute Zinc, Manganese, Lead Concentrations From a Municipal Refuse Quench/Scrubber Wastewater Effluent Using Chemical Precipitation Techniques"; R.M. Results for Sulfide Treatment of Heavy Metal Wastewaters Using Generated Ferrous Sulfide"; F.A. DAMICO and O.F SMITH, Recoverable Wastes From III--V Compound Semiconductor Manufacture"; SUJARITTANONTA and J.H. SHERRARD, "Activated Sludge
Descriptors: Pollution abatement
Section Heading: 72 .(SPECIAL PUBLICATIONS) Journal Announcement: 8001

702973 80-710042
Removal of Dilute Zinc, Manganese, Cadmium and Lead Concentrations From a Municipal Refuse Quench/Scrubber Wastewater Effluent Using Chemical Precipitation Techniques.
Gillen, B D
Eleventh Mid-Atlantic Industrial Wastes, Pennsylvania State University, Pa., 15-17 July 1979
14-24
Publ: Pennsylvania State University, Philadelphia, Pa., 1979
Language: ENGLISH
Document Type: BOOK
Various sampling programs and bench-scale treatability studies performed on the process water discharge of two municipal refuse incinerators are described. The waste water was characterized for chemical composition and solids concentration. Effluent métal concentrations were related to effluent pH and temp. Metal removal in the 90-97% range was achieved by lime polymer addition. A system for the removal of metals is recommended.14 refs.--A.M.G.
Descriptors: Gas scrubbing; Industrial wastes; Effluents; Zinc, Recovering; Cadmium, Recovering; Manganese, Recovering; Lead (metal), Recovering
Section Heading: 71 .(GENERAL AND NONCLASSIFIED) Journal Announcement: 8001

702779 80-580040
Operating Results for Sulfide Treatment of Heavy Metal Wastewaters Using In-Process Generated Ferrous Sulfide.
Schlauch, R M
Eleventh Mid-Atlantic Industrial Wastes, Pennsylvania State University, Pa., 15-17 July 1979
38-51
Publ: Pennsylvania State University, Philadelphia, Pa., 1979
Language: ENGLISH
Document Type: BOOK
The operation and performance of four wastewater treatment installations for different types of metal finishing operations are described. Each system employs an advanced technique for highly effective removal of heavy metals by reaction with sulfide. A novel method of sulfide precipitation, using ferrous sulfide, has been shown to be superior to the conventional hydroxide processes in removing both dissolved and complexed heavy metals. It also has the advantage over other sulfide precipitation methods in that it will maintain a high stoichiometric excess of sulfide in the system to increase reaction kinetics, but prevents the unwanted formation and evaluation of toxic hydrogen sulfide gas.--AA
Descriptors: Copper, Recovering; Iron, Recovering; Electroless plating; Precipitation; Water pollution; Effluents ; Sulfides
Section Heading: 58 .(METALLIC COATING) Journal Announcement: 8001

680080 79-720340
Advanced Pollution Control for the Metal Finishing Industry.
Kissimmee, Fla., 5-7 Feb. 1979
Pp 151, 81/2 x 11 in., Illustrated
Publ: U.S. Environmental Protection Agency, Cincinnati, Ohio 45268, May 1979
Language: ENGLISH
Document Type: BOOK
Contents include. M E. BROWNING, J. KRALJIC and G.S. Finishing Sludge Disposal; Economic, Legislative and Technical for 1979"; C. ROY, "Methods and Technologies for Reducing the Electroplating Sludges"; P.S. MINOR and R.J. BATSTONE, Federal Republic of Germany's Centralized Waste Treatment Approach in United States"; F.A. STEWARD and H.H. HEINZ, "Economical Shop Case History"; J A. BIENER, "City of Grand Rapids, Industrial Waste Control"; A.F. LISANTI and S.O. Proper Unit Processes for the Treatment of Electroplating Wastewaters"; PRICE and C. NOVOTNY, "Water Recycling and Nickel Recovery Exchange"; K.J. McNULTY and J.W. KUBAREWICZ, "Field Closed-Loop Recovery of Zinc Cyanide Rinsewater Using Reverse Osmosis Evaporation"; J.L. EISENMANN, "Membrane Processes for Metal Electroplating Rinse Water"; M.C. SCOTT, "An EPA Heavy Metals Removal by Sulfide Precipitation"; C.P. HUANG and "The Development of an Activated Carbon Process for the Treatment of Chromium (VI)-Containing Plating Wastewater"; J. SANTO, et "Removal of Heavy Metals From Battery Manufacturing Wastewaters by Cross-Flow Microfiltration"; G.D. McKEE, "Status of Analytical Cyanide"; V.S. KATARI, R.W GERSTLE and C.H. Degreaser Emissions".
Descriptors: Pollution abatement; Electroplating
Section Heading: 72 .(SPECIAL PUBLICATIONS) Journal Announcement: 7911

680036 79-710506
Removal of Heavy Metals From Battery Manufacturing Wastewaters by Hydroperm Cross-Flow Microfiltration.
Santo, J
Advanced Pollution Control for the Metal Finishing Industry, Kissimmee, Fla., 5-7 Feb. 1979
123-130
Publ: U.S. Environmental Protection Agency, Cincinnati, Ohio 45268, May 1979
Language: ENGLISH
Document Type: BOOK
The results of the heavy metals separation tests by the Hydroperm separation system described are not dependent on either the fact that the wastewater containing the heavy metals is from a battery manufacturing plant or that the metals were precipitated with lime. Removal by Hydroperm of various metals in suspended solid (SS) form as a result of precipitation by chemicals other than lime would still be just as effective. Thus, the results would appear to have widespread application throughout the metal finishing industry. If either the waste characteristics or the precipitant were to be changed, it is clear from past Hydroperm tests (with Zn, Cu, Cd and Ni) results similar to those reported in suspended solids removal would be obtained by appropriate changes in tube pore-size distribution and operating conditions. Tube performance in removal of SS is substantially independent the type of metal or concentration.10 refs.--AA
Descriptors: Lead (metal), Recovering; Cadmium, Recovering; Electric batteries; Water pollution; Filtration; Precipitation
Section Heading: 71 .(GENERAL AND NONCLASSIFIED) Journal Announcement: 7911

668264 79-710324
Ammonia Steam Stripping at Miscellaneous Nonferrous Metals Plants, Case Histories.
Struzeski Jr, E J
The 33rd Industrial Waste Conference, Lafayette, Ind., 9-11 May 1978
204-210
Publ: Ann Arbor Science Publishers Inc, P.O. Box 1425, Ann Arbor, Mich. 48106, 1979
Language: ENGLISH
Document Type: BOOK
The advantages and disadvantages of various methods for removal of N from nonferrous metals plants' wastewaters are described. These are: biological nitrification--dentrification, chemical precipitation, reverse osmosis, ion exchange, breakpoint chlorination, evaporation, air stripping and steam stripping. Four case histories of steam stripping are given; Ta and rare earths, processing of nuclear fuels and Zr processing --H.A.D.
Descriptors: Water pollution; Pollution abatement; Nonferrous metals; Ammonia; Stripping (distillation)
Section Heading: 71 .(GENERAL AND NONCLASSIFIED) Journal Announcement: 7906

668069 79-580327
Recovery of Metals From Electroplating Wastes.
Knocke, W R ; Clevenger, T ; Ghosh, M M ; Novak, J T
The 33rd Industrial Waste Conference, Lafayette, Ind., 9-11 May 1978
415-426
Publ: Ann Arbor Science Publishers Inc., P.O. Box 1425, Ann Arbor, Mich. 48106
Language: ENGLISH
Document Type: BOOK
Two alternate methods for liquid--liquid extraction of metals from wastewaters were investigated: direct extraction of metals and physico--chemical concentration treatment followed by liquid--liquid extraction. The following topics are discussed: plating process description, insolubilization/-precipitation, sludge dewatering, metal hydroxide sludge characteristics, and liquid--liquid extraction.18 refs.--H.A.-D.
Descriptors: Electroplating; Wastes; Reclamation
Section Heading: 58 .(METALLIC COATING) Journal Announcement 7906

652203 79-720011
Proceedings of the 31st Industrial Waste Conference.
Bell, J M
Lafayette, Ind., 6-8 May 1976
Pp 1164, 6 x 91/4 in., Illustrated
Publ: Ann Arbor Science Publishers, Inc., P.O. Box 1425, Ann Arbor, Mich. 48106., 1976
Language: ENGLISH
Document Type: BOOK
Contents include: J. McVAUGH and W.T. WALL, Jr., Metals Wastewater Treatment Effluent Quality Vs. Sludge Treatment"; METRY and M.E. HARRIS, "A New Concept for Treating Leachate Runoff Waters From a Taconite Transshipment Facility"; M-H Wu, and C-P. HUANG, "Regeneration of Activated Carbon for the Chromium"; W.E. LINK and J.G. RABOSKY, "Fluoride Ion Waste-Water Employing Calcium Precipitation and Iron Salt WARNKE, K G. THOMAS and S.C. CREASON, "Reclaiming Reverse Osmosis"; J.A. DRAGO and J.R. BUCHHOLZ. "Removal Contaminants From Aqueous Laboratory Wastes by Chemical Treatment"; PROBER, P.B. MELNYK and L.A. MANSFIELD, "Treatment Furnace Effluents to Inhibit Formation of Iron-Cyanide Complexes"; HOCKENBURY, J.M. BOWER and A.W. LOVEN, "Metal Wastewater Treatment: a Case History."
Descriptors: Waste disposal; Pollution abatement
Section Heading: 72 .(SPECIAL PUBLICATIONS) Journal Announcement: 7901

652174 79-710043
Removal of Heavy Metals From a Fatty Acid Wastewater With a Completely Mixed Anaerobic Filter.
Chian, E K ; DeWalle, F B
Proceedings of the 32nd Industrial Waste Conference, Lafayette, Ind., 10-12 May 1977
920-928
Publ: Ann Arbor Science Publishers, Inc., Ann Arbor, Mich. , 1978
Language: ENGLISH
Document Type: BOOK
A study showed that a completely mixed anaerobic filter is effective in removing heavy metals (Fe, Zn, Cu, Cr, Ni, Pb and Cd) from a acidic wastestream. The effectiveness of the filter increases with increasing metal concentrations in the influent. The metals are precipitated as carbonates and hydroxides and are removed from the filter as a slurry that accumulates in the bottom solids collection device. The percentage metal removal decreased while the metal content in the bottom slurry increased with decreasing hydraulic detention time. Analysis of metals at different depths the filter showed that most of the metals are removed in the lower 50 cm of the filter.12 refs.--AA
Descriptors: Wastes; Filtration; Pollution abatement; Effluents; Iron; Zinc; Copper
Section Heading: 71 .(GENERAL AND NONCLASSIFIED) Journal Announcement: 7901

652172 79-710041
Sulfex--a New Process Technology for Removal of Heavy Metals From Waste Streams.
Scott, M C
Proceedings of the 32nd Industrial Waste Conference, Lafayette, Ind., 10-12 May 1977
622-629
Publ: Ann Arbor Science Publishers, Inc., Ann Arbor, Mich. 1978
Language: ENGLISH
Document Type. BOOK
The Sulfex process described represents an economical and feasible approach to sulfide precipitation of heavy metals. As such it offers the advantages of more complete removal of metals from waste streams than hydroxide precipitation, generally at pH ranges which are acceptable discharge. It removes most chelated metals from wastewaters and reduces hexavalent Cr as it precipitates the other heavy metals as sulfides. It is a new process which has been successfully piloted on three waste --AA
Descriptors: Sludge; Precipitation; Sulfides; Wastes; Chromium; Iron
Section Heading: 71 .(GENERAL AND NONCLASSIFIED) Journal Announcement: 7901

652153 79-710022
***Fluoride Ion Removal From Wastewater Employing Calcium* Precipitation and Iron Salt Coagulation.**
Link, W E ; Rabosky, J G
Proceedings of the 31st Industrial Waste Conference, Lafayette, Ind., 6-8 May 1976
485-500
Publ: Ann Arbor Science Publishers, Inc., Ann Arbor, Mich. 1976
Language: ENGLISH
Document Type: BOOK
Fluoride-laden wastewaters originate from many different types of industries. Some metal finishing and electroplating operations produce effluents containing fluoride. Other industries which use fluorides are Al, insecticide, chemical and fertilizer. The results of a study in which fluoride ion was reduced to approx 3.0 mg/l are presented. Laboratory studies were conducted using both sodium fluoride solutions and actual plant wastewater from a manufacturing plant. The process employed required lime for precipitation which was then followed by coagulation with iron salts. The proposed *method for fluoride removal utilized two distinct chemical* additions. In the first, lime provided the Ca and hydroxide necessary. for fluoride precipitation and downstream neutralization of acid wastewaters, respectively. ferrous sulfate, which was the second chemical to be added, was necessary for coagulation. Fluoride removal efficiencies of approx 96 to 98% were achieved using actual plant wastewaters. These reductions were obtained for both the segregated or concentrated fluoride waste stream and for the total or blended plant wastewaters. Using the proposed method of treatment, one series of samples was reduced in fluoride concentration from 145 to 3.0 mg/l; however, final fluoride concentration averaged approx 6-7 mg/l for all treated samples.28 refs.--AA
Descriptors: Water pollution; Fluorides; Precipitation; Coagulation
Section Heading: 71 .(GENERAL AND NONCLASSIFIED) Journal Announcement: 7901

652143 79-710012
Heavy Metal Treatment by Carbonate Precipitation.
Patterson, J W ; Scala, J J ; Allen, H E
Proceedings of the 30th Industrial Waste Conference, Lafayette, Ind., 6-8 May 1975
132-150
Publ: Ann Arbor Science Publishers, Inc., Ann Arbor, Mich 1975
Language· ENGLISH
Document Type: BOOK
Various treatment methods are employed to remove heavy metals such as Ni, Cd, Pb, Cu and Cr from industrial wastewaters. Carbonate the heavy metals Zn, Ni, Cd and Pb was investigated for three reasons: predicted optimum carbonate precipitation treatment occurs at pH values less than those for optimum hydroxide treatment; the metal carbonate precipitate is reported to be more dense than the hydroxide precipitate, yielding improved solids separation and decreased *sludge volume; and carbonate precipitates are reported to have* better filtration characteristics than hydroxide precipitates. The determination of hydroxide solubility for Zn, Cd and Pb over a range of approx pH 6-13, the carbonate solubility for same heavy metals over the same pH range, at selected carbonate concentrations are determined and the solubility of the hydroxide precipitate vs. the carbonate precipitate in controlling the solubility of the precipitated metal was assessed --AA
Descriptors: Industrial wastes; Precipitation; Solubility; Zinc, Solubility; Nickel, Solubility; Cadmium, Solubility; Lead (metal), Solubility
Section Heading: 71 .(GENERAL AND NONCLASSIFIED) Journal Announcement: 7901

652002 79-580025
Cementation Treatment of Copper in Wastewater.
Patterson, J W ; Jancuk, W a
Proceedings of the 32nd Industrial Waste Conference, Lafayette, Ind., 10-12 May 1977
853-865
Publ: Ann Arbor Science Publishers, Inc., Ann Arbor, Mich. 1978
Language. ENGLISH
Document Type: BOOK
The cementation treatment process is employed to a limited extent for removal and recovery of Cu in an essentially pure metallic form. The stoichiometry and kinetics of Cu cementation, utilizing Fe as the metal were investigated. Copper cementation was determined to be a reaction with respect to the removal of Cu from wastewater and the rate of cementation is independent of the presence of O. Copper cementation is independent of pH, but at pH > 3 ferric hydroxide precipitation masks and interferes with Cu recovery. Kinetic expressions developed in experiments can be employed to predict the performance of continuous-flow reactors. The recovered Cu contains approx 38% moisture, and 95.5% pure Cu on a dry weight basis.13 refs.--AA
Descriptors: Copper; Cementation; Reclamation; Wastes
Section Heading: 58 .(METALLIC COATING) Journal Announcement: 7901

651582 79-520025
Metal Forging and Processing Wastewater Treatment: a Case History.
Hockenbury, M R ; Bower, J M ; Loven, A W
Proceedings of the 31st Industrial Waste Conference, Lafayette, Ind., 6-8 May 1976
982-993
Publ: Ann Arbor Science Publishers, Inc., Ann Arbor, Mich. 1976
Language: ENGLISH
Document Type: BOOK
Wastewater from the forge shop containing suspended solids and oil and grease can be treated using series gravity oil/water separation, equalization, coagulation, flocculation and dissolved-air flotation. Emulsified oily wastewater is treated by chemical coagulation, acid cracking, free oil removal and gravity settling following pH adjustment. Chemical rinsewaters containing heavy metals and fluoride are amenable to high-pH (10 to 11) precipitation of metal hydroxides and calcium fluoride, followed by coagulation, flocculation and clarification. Secondary pH adjustment, coagulation, flocculation and clarification are necessary for Al removal due to its solubility at high pH. Spent acids can continue to be on a batch basis with lime and caustic as efficient heavy metal and fluoride precipitation can be accomplished.8 refs.--AA
Descriptors: Forging; Wastes; Aluminum; Pollution abatement
Section Heading: 52 .(WORKING) Journal Announcement: 7901

630519 78-580798
Sulfide Vs. Hydroxide Precipitation of Heavy Metals From Industrial Wastewater.
Robinson, A K
First Annual Conference on Advanced Pollution Control for the Metal Finishing Industry U S EPA, Cincinnati, Ohio. 1978, 59-65.
Language: ENGLISH
Document Type: ARTICLE
Descriptors: Waste disposal; Chromium, Reactions (chemical); Sulfides, Reactions (chemical); Precipitation; Electroplating
Section Heading: 58 .(METALLIC COATING) Journal Announcement: 7812

559847 77-420209
Integrated Recycling of Wastewater by Application of Ion, Precipitate and Ultrafine-Particle Flotation in the Pb-Zn Concentrator of Kamioka Mine.
Ishizu, Akira; Matsui, Nobuo; Nagahama, Tatsuya
World Mining and Metals Technology Vol 2 American Institute of Mining, Metallurgical and Petroleum Engineers, New York. 1976, 754-776.
Language: ENGLISH
Document Type: ARTICLE
Descriptors: Recycling; Water; Lead (metal), Extraction; Zinc, Extraction; Flotation; Pollution abatement
Section Heading: 42 .(EXTRACTION AND SMELTING) Journal Announcement: 7704

786710 81-421536
Air, Land or Water: the Dilemma of Coke Plant Waste Water Disposal. (Retroactive Coverage).
Dunlap, R W ; McMichael, F C
American Iron and Steel Institute, 83rd General Meeting, New York, N.Y., 21 May 1975
Pp 27
Publ: AISI, 150 E. 42nd St., New York, N.Y. 10017, 1975
Language: ENGLISH
Document Type: BOOK
Wastewater discharges containing cyanide, phenol and ammonia, e.g. must be treated according to EPA standards. Eight alternative strategies are discussed, considering levels of wastewater treatment, recycle or quench water. Choices between alternative strategies are based on the relative values of a numerical index with cross-media analysis, which is basically a weighted mass emissions analysis. Quenching with coke plant effluents appears to be a preferred practice for greatest net improvement of the environment.--J.J.P.
Descriptors: Pollution abatement; Coke ovens; Waste disposal ; Water pollution; Recycling
Section Heading: 42 .(EXTRACTION AND SMELTING) Journal Announcement: 8111

784136 81-580849
Routes to Metals Recovery From Metal Finishing Sludges.
Mehta, A
Third Conference on Advanced Pollution Control for the Metal Finishing Industry, Kissimmee, Fla., 14-16 Apr. 1980
76-79
Publ: Industrial Environmental Research Laboratory, U.S. Environmental Protection Agency, Cincinnati, Ohio 45268, 1981
Language: ENGLISH
Document Type: BOOK
Process wastewaters from the electroplating industry contain cyanides and heavy metals that must be treated because of environmental impact and discharge regulations. One of the treatment technologies already in wide use and more likely to be installed is neutralization and precipitation technology which destroys the cyanide and removes the heavy metals as hydroxides. Various ways to recover metals from metal finishing sludges are discussed along with economical considerations. The concept of a Centralized Waste Treatment Facility (CWTF) is presented as an alternate to individual metal recovery treatments. Other topics discussed are: pyrometallurgical treatments; hydrometallurgical treatments; commonly used leaching reagents; ion exchange; solvent extraction; cementation and electrolysis 7 refs.--G.G.M.
Descriptors: Electroplating; Sludge disposal; Pollution abatement; Copper, Recovering; Zinc, Recovering
Section Heading: 58 .(METALLIC COATING) Journal Announcement. 8110

784034 81-570604
Stabilization of Heavy Metal Wastes by the Solroc Process.
Rousseaux, J M ; Craig Jr, A B
Third Conference on Advanced Pollution Control for Metal Finishing Industry, Kissimmee, Fla., 14-16 Apr. 1980
70-75
Publ: Industrial Environmental Research Laboratory, U.S. Environmental Protection Agency, Cincinnati, Ohio 45268, 1981
Language: ENGLISH
Document Type: BOOK
The metal finishing industry generates a variety of waste materials that are potentially hazardous, i.e. electroplating process residues, pickling acids and wastewater treatment sludges containing cyanides and heavy metals. Landfilling and ponding are two common methods for disposal of these wastes but very little precaution is taken to prevent ground water contamination. Various fixation techniques have been studied to chemically bind inorganic residues and sludges; these include precipitation, encapsulation, asphalting, cementation and other similar stabilization processes. An evaluation of one fixation process, the Solroc process, developed by Cemstobel in Brussels, Belgium, is discussed. The evaluation was designed to provide experimental data and to establish a data base for future pilot scale work.--G G.M.
Descriptors: Waste disposal; Pollution abatement; Pickling; Electroplating
Section Heading: 57 .(FINISHING) Journal Announcement: 8110

724758 80-720283
Management and Control of Heavy Metals in the Environment.
London, England, Sept. 1979
Pp 664, 8 x 113/4 in., Illustrated
Publ: Commission of the European Communities, Boite Postale 1003, Luxembourg, 1979
Language: ENGLISH
Document Type: BOOK
Contents include: I. BREMNER and C.F. MILLS, "Effects of Diet on the Toxicity of Heavy Metals"; N.W. GHELBERG and E. BODOR, "Arsenic Levels in the Environment and in Human Body in a Copper Metallurgy Plant Area"; M. ABDULLA, S. SVENSSON and A. NORDEN, "Antagonistic Effect of Zinc in Heavy Metal Poisoning"; W.H. STRAIN, A.W. VARNES and O.A. HILL, JR., "Heavy Metal Contamination of Household Water"; B.Z. DIAMANT, "Environmental Health Impact of Heavy Metals in Wastewater Sludge Applied to Cropland"; I. SAITO, "Removal of Chromium (VI) in Aqueous Solutions by Activated Carbons"; K.K. CHIN and J.H. TAY, "Laboratory Scale Treatment of Nickel-Bearing Industrial Effluent"; C.P C. POON, "Removal of Copper, Nickel, Zinc, Cadmium and Cyanide from Plating Wastewater by Electroflotation"; N.L. GALE and B.G. WIXSON, "Control of Heavy Metals in Lead Industry Effluents by Algae and Other Aquatic Vegetation"; J. HRSAK and M. FUGAS, "Distribution of Particulate Lead, Zinc and Cadmium Around a Lead Smelter"; K. SCHWITZGEBEL, R.V. COLLINS and R.T. COLEMAN, "Arsenic Discharge From a Primary Copper Smelter"; C.L. CHAPPELL and S.L. WILLETTS, "Isolation of Heavy Metals From the Environment"; A.N. CLARKE and D.J. WILSON, "The Removal of Metallo-Cyanide Complexes by Foam Flotation"; H J. JEBENS, G.J. MEYERHOFER and D.J. MASTERS, "Removal of Heavy Metals From Industrial Wastewaters"; F. EL-GOHARY, M.R. LASHEEN and H I. ABDEL-SHAFY, "Trace Metal Removal From Wastewater Via Chemical Treatment".
Descriptors: Toxicology; Water pollution; Pollution abatement
Section Heading: 72 .(SPECIAL PUBLICATIONS) Journal Announcement: 8008

724528 80-580612
Removal of Copper, Nickel, Zinc, Cadmium and Cyanide From Plating Wastewater by Electroflotation.
Poon, C P C
Management and Control of Heavy Metals in the Environment, London, England, Sept. 1979
572-575
Publ: Commission of the European Communities, Boite Postale 1003, Luxembourg, 1979
Language. ENGLISH
Document Type: BOOK
The use of an electroflotation process to remove heavy metals from plating wastewaters was investigated. Cathodic generation of hydroxides raised the pH and reduced the metal solubility, resulting in metal precipitation which was carried up to the surface by the rising gas bubbles. Copper, Ni, Zn and Cd were successfully removed, with the effluents meeting U.S. standards. Free oxygen and ozone produced at the anode oxidized Ni in solution to form nickel oxides which precipitated out. Hypochlorite and Cl gas oxidized cyanide and liberated heavy metals from the cyanide--metal complexes which preceded alkaline precipitation. Performance equations were developed which indicated the relative significance of the effect of each operating variable on treatment performance and suggested how the process could be better modified to treat plating wastewaters of different characteristics.--AA
Descriptors: Electroplating; Flotation; Pollution abatement; Copper, Recovering; Nickel, Recovering; Zinc, Recovering; Cadmium, Recovering
Section Heading: 58 .(METALLIC COATING) Journal Announcement: 8008

715594 80-720189
Ironmaking Conference, Vol. 35.
St. Louis, Mo., 28-31 Mar. 1976
Pp 651, 81/4 x 111/2 in., Illustrated (retroactive coverage)
Publ: Iron and Steel Society AIME, 345 E. 47th St., New York, N.Y. 10017, 1976
Language: ENGLISH
Document Type: BOOK
Contents include: M. HATANO and M. FUKUDA, "The Effect on the Blast Furnace Operation"; D.G. WHITE, "An Adaptive Model Top-Gas Analysis"; D. KONCHAR and R.L. PRIDDY, Iron"; A. MERTDOGAN and R. LANGHOFF, "Response Time of Composition of Molten Iron to the Changes in Coke Moisture and Chemical Composition of Sinter in the Blast Furnace"; T. OCHIAI, H HOSHIIDE, "Vibration Forming Troughs"; R. SANTELLA, Furnace Linings"; J.L. PUGH, "Anhydrous Clay Vs. Water-Base YOUNT, JR., "Anhydrous Taphole Mixes for the Blast Furnace'; "Blast Furnace Anhydrous Taphole Mixes'; R.E. ROSS, "Blast Taphole Mixes"; J.A. WILLIAMS and O.A. HOMBERG, "Coke Desulfurization and Sulfur Recovery Utilizing the Sulfiran Process"; LOWNIE, JR., and A.O. HOFFMAN, "A Research Approach to Problems";; D. GLASSMAN, "USS CYAM System--an Improved and Cyanide Removal From Coke-Plant Wastewater'; J.G. MANDA, and D.F. CAIRNS, "Development of One-Spot Enclosed Coke Pushing N.A. HASENACK, R.B. VOGEL and F. HOMMINGA, "The and Their Behavior in the Blast Furnace"; R.F. CNARE and G.M. Recoup System--a New Method of Heat Recuperation in the Grate-Kiln R.P. SOUZA, "The Production of Pellets in CVRD Using Hydrated Is Growing Up Fast"; W.J. PRIESTNER, "Air Preheater System Stoves"; G. VICARD and P.M. WECHSELBLATT, "High Furnaces"; E.L. GUNTHER and H. SCHOPPA, "Panel in the Blast Furnace. Experience With Stave Coolers on a Blast Hoesch Huttenwerke, AG"; H.W. BLACKBURN, "Experience With Cooling at the Steel Co. of Canada's No 4 Blast Furnace"; T.E. "Cooling Hazards in High Tonnage Carbon Hearths"; C.M. on Blast-Furnace Tuyeres"; M. YOSHINAGA, M. SANADA and "Industrialization of Briquet Blent Coking Process"; L.G. THOMPSON, "Selection of Coals and Coal Mixes to Avoid Excessive Pressure"; E.J. OSTROWSKI, "Coal Quality--Its Effect on the J. FISCHLEY, "Some Aspects of Blast Furnace Operation at Poor Quality Coking Coals in the Coke Plant Mix"; P. SCHROTH ROBINSON, "The Effects of Alkali Attack on Various Carbon LAMBERT, "Operation of Geneva Works Blast Furnaces With Burdens"; F. FORES, J. BALLANO, J. LAVANDERA, M. "Alkalies--Problem or Solution? at Altos Hornos de VIzcaya SA"; and W.R. CORZILLIUS, "Blast furnace Operations at Granite High Alkali Bearing Burdens" R.T.Roberts,, "MIDREX Yesterday H.A. KULBERG, "Current Status of the FIOR de Venezuela Plant G.G.W. THOM and K. WILSON, "New SL/RN Direct Reduction Mine"; J. CELADA and G.E. McCOMBS, "HYL Direct LEONARD and S. MACDONALD, "Direct Reduction With Gas Coal Gasification Process"; R.J. HELFINSTINE, "Charging a Pilot Coke Oven"; D.A. COOPER, P.J. DE KOKER, I. and A N. VENTER, "South African Experiences With Preheated Coal J.P. GRAHAM, "Coal Preheating--Research and Development in the Kingdom"; R.F. DAVIS, JR., "The COALTEK System--Pipeline Ovens"; W L McHENRY, R.L LAND and A. FERNANDEX, and Start-Up of United States Steel's No. 2 Coke Battery at Gary PRIES and F WACKERBARTH, "Experience Gained During the Start-Up of the 7.5 Meter Coke Ovens in Fos-sur-Mer, France"; W.C. and J.L. BAYER, "Measurement and Evaluation of Heat Distribution Ovens"; M. HIGUCHI, M. IIZUKA and Y. TAKASAKI, "On Operational Control of No. 5 Sinter Machine at Fukuyama Works, Nippon KK"; P.T. SEATON and F.B. TRAICE, "Development of a Prediction of Sinter Plant Productivity From Ore Properties"; H. J. OTTO, "Possibilities of Improvements to Existing Sinter WILSON and G.K. JEFFERSON, "Operating Experience of No. Gary Works"; S.E. NANNE, "Operating Experience on Algoma's No. Furnace"; S. SHIMADA, "Production of 13.5 Million Tons on Furnace".
Descriptors: Ironmaking; Blast furnaces; Heat recovery
Section Heading: 72 .(SPECIAL PUBLICATIONS) Journal Announcement: 8005

714467 80-420433
USS CYAM System--an Improved Process for Ammonia and Cyanide Removal From Coke-Plant Wastewater. (Retroactive Coverage).
Glassman, D
Ironmaking Conference, Vol. 35, St. Louis, Mo., 28-31 Mar. 1976
121-131
Publ: Iron and Steel Society AIME, 345 E. 47th St , New York, N.Y. 10017, 1976
Language: ENGLISH
Document Type: BOOK
Environmental regulatory agencies require the treatment of coke-plant wastewater for removal of ammonia, cyanide and phenol before discharge to streams and other utilities, uses lime and avoids fouling. When used in conjunction with an activated-sludge system, it provides an ideal feed that promotes smooth operation because of the virtual absence of simple cyanides. These benefits are achieved with capital costs that are competitive with for conventional free- and fixed-ammonia stills.--AA
Descriptors: Coking; Water pollution; Waste disposal; Purification; Ammonia
Section Heading: 42 .(EXTRACTION AND SMELTING) Journal Announcement: 8005

680080 79-720340
Advanced Pollution Control for the Metal Finishing Industry.
Kissimmee, Fla., 5-7 Feb 1979
Pp 151, 81/2 x 11 in., Illustrated
Publ. U.S. Environmental Protection Agency, Cincinnati, Ohio 45268, May 1979
Language: ENGLISH
Document Type: BOOK
Contents include: M.E. BROWNING, J. KRALJIC and G.S. Finishing Sludge Disposal; Economic, Legislative and Technical for 1979"; C. ROY, "Methods and Technologies for Reducing the Electroplating Sludges"; P.S. MINOR and R.J. BATSTONE, Federal Republic of Germany's Centralized Waste Treatment Approach in United States"; F.A. STEWARD and H.H. HEINZ, "Economical Shop Case History"; J.A. BIENER, "City of Grand Rapids, Industrial Waste Control"; A.F. LISANTI and S.O. Proper Unit Processes for the Treatment of Electroplating Wastewaters"; PRICE and C. NOVOTNY, "Water Recycling and Nickel Recovery Exchange"; K.J. McNULTY and J.W. KUBAREWICZ, "Field Closed-Loop Recovery of Zinc Cyanide Rinsewater Using Reverse Osmosis Evaporation"; J.L. EISENMANN, "Membrane Processes for Metal Electroplating Rinse Water"; M.C. SCOTT, "An EPA Heavy Metals Removal by Sulfide Precipitation"; C.P. HUANG and "The Development of an Activated Carbon Process for the Treatment of Chromium (VI)-Containing Plating Wastewater"; J. SANTO, et "Removal of Heavy Metals From Battery Manufacturing Wastewaters by Cross-Flow Microfiltration"; G.D. McKEE, "Status of Analytical Cyanide"; V.S. KATARI, R.W. GERSTLE and C.H. Degreaser Emissions".
Descriptors: Pollution abatement; Electroplating
Section Heading: 72 .(SPECIAL PUBLICATIONS) Journal Announcement: 7911

679868 79-580679
Selecting the Proper Unit Processes for the Treatment of Electroplating Wastewaters.
Lisanti, A F ; Megantz, S O
Advanced Pollution Control for the Metal Finishing Industry, Kissimmee, Fla., 5-7 Feb. 1979
64-75
Publ: U.S. Environmental Protection Agency, Cincinnati, Ohio 45268, May 1979
Language. ENGLISH
Document Type: BOOK
An engineering approach to the selection of unit processes for the treatment of electroplating wastewaters is presented. The approach consists of rinse water conservation, waste stream segregation, stream characterization, field treatability studies, laboratory treatability studies, system design, construction and startup. Three electroplating facilities are described to show differences in these systems and how to accomodate unique problems with these systems Data are given on removal of complexed Cu, Ni other metals, electrolytic reduction of segregated Cr(+6), treatment of cyanide, effect of polishing filtration, effect of total treatment, analysis of effluent, projected concentrations in chemical O demand waste, removal of soluble and insoluble oil, quality of combined treated wastewaters, destruction of amenable cyanide, filter press performance and ultrafiltration effluent quality of permeate soluble oil.--H.A D.
Descriptors: Electroplating; Water pollution; Pollution abatement; Effluents; Recovering
Section Heading: 58 .(METALLIC COATING) Journal Announcement: 7911

679860 79-580671
Environmental Pollution Control Alternatives: Economics of Wastewater Treatment Alternatives for the Electroplating Industry. (Pamphlet).
Pp 72
Publ: Industrial Environmental Research Laboratory, Cincinnati, Ohio 45268, June 1979
Report Number: EPA 625/5-79-016
Language: ENGLISH
Document Type: REPORT
This report provides a detailed examination of the costs associated with various water pollution control alternatives available to the metal finishing industry. The document also provides some figures for computing the savings associated with various good housekeeping practices such as spent bath reuse and minimization of water usage. The document is geared to the plater who may be evaluating control costs for the first time. However, even those experienced in these matters will probably benefit from the discussions of housekeeping practices, various recovery techniques and emerging technologies.--AA
Descriptors: Electroplating; Cyanides; Recycling; Effluents; Water pollution; Pollution abatement
Section Heading: 58 .(METALLIC COATING) Journal Announcement: 7911

652203 79-720011
Proceedings of the 31st Industrial Waste Conference.
Bell, J M
Lafayette, Ind., 6-8 May 1976
Pp 1164, 6 x 91/4 in., Illustrated
Publ: Ann Arbor Science Publishers, Inc., P.O. Box 1425, Ann Arbor, Mich. 48106., 1976
Language. ENGLISH
Document Type BOOK
Contents include: J. McVAUGH and W.T. WALL, Jr., Metals Wastewater Treatment Effluent Quality Vs. Sludge Treatment"; METRY and M.E. HARRIS, "A New Concept for Treating Leachate Runoff Waters From a Taconite Transshipment Facility"; M-H. Wu, and C-P. HUANG, "Regeneration of Activated Carbon for the Chromium"; W.E. LINK and J.G. RABOSKY, "Fluoride Ion Waste-Water Employing Calcium Precipitation and Iron Salt WARNKE, K.G. THOMAS and S.C. CREASON, "Reclaiming Reverse Osmosis"; J.A. DRAGO and J.R. BUCHHOLZ, "Removal Contaminants From Aqueous Laboratory Wastes by Chemical Treatment"; PROBER, P.B. MELNYK and L.A. MANSFIELD, "Treatment Furnace Effluents to Inhibit Formation of Iron-Cyanide Complexes"; HOCKENBURY, J.M BOWER and A.W. LOVEN, "Metal Wastewater Treatment· a Case History".
Descriptors: Waste disposal; Pollution abatement
Section Heading: 72 .(SPECIAL PUBLICATIONS) Journal Announcement: 7901

652171 79-710040
Industrial Wastewater Ozonation.
Hardisty, D M ; Rosen, H M
Proceedings of the 32nd Industrial Waste Conference, Lafayette, Ind., 10-12 May 1977
294-302
Publ: Ann Arbor Science Publishers, Inc., Ann Arbor, Mich , 1978
Language· ENGLISH
Document Type: BOOK
Ozone generation and application is an established technology with numerous applications in industrial wastewater treatment. The key advantage offered by ozone is its strong oxidizing capability and its clean, add-nothing feature. As for any wastewater treatment system, the cost factors require careful assessment The economics of using O feed vs. air feed bear on this cost analysis. Treatment of effluents with materials such as cyanide, phenol, color and COD is feasible.10 refs.--AA
Descriptors: Wastes, Oxidation; Ozone; Pollution abatement
Section Heading: 71 .(GENERAL AND NONCLASSIFIED) Journal Announcement 7901

755990 81-570054
Wastewater and Hazardous Solid Waste Disposal in the Aluminum Products Industry.
Marino, M
Met Finish. ,Oct. 1980, 78, (10), 21-27, 40
Language: ENGLISH
Document Type: ARTICLE
Government regulations concerning the disposal of solid and liquid wastes in the Al industry are discussed. The existing regulations for waste water discharge were established by the Federal Water Pollution Control Act Amendments of 1972. The practical application of these regulations to Al product plants (anodizing, chromating and phosphating) is described and the impact of probable future regulatory changes is outlined. Solid waste disposal is regulated by the 1976 Resource Conservation and Recovery Act. The proposed EPA guidelines for defining hazardous solid wastes are included. Recommendations for meeting guidelines and treatment cost minimization are included.--G.P.K.
Descriptors: Aluminum base alloys, Coating; Waste disposal; Pollution abatement; Anodizing; Chromating
Section Heading: 57 (FINISHING) Journal Announcement: 8102

724758 80-720283
Management and Control of Heavy Metals in the Environment.
London, England, Sept. 1979
Pp 664, 8 x 113/4 in., Illustrated
Publ: Commission of the European Communities, Boite Postale 1003, Luxembourg, 1979
Language: ENGLISH
Document Type: BOOK
Contents include: I. BREMNER and C.F. MILLS, "Effects of Diet on the Toxicity of Heavy Metals"; N.W. GHELBERG and E. BODOR, "Arsenic Levels in the Environment and in Human Body in a Copper Metallurgy Plant Area"; M. ABOULLA, S. SVENSSON and A. NORDEN, "Antagonistic Effect of Zinc in Heavy Metal Poisoning"; W.H. STRAIN, A.W. VARNES and D.A. HILL, JR., "Heavy Metal Contamination of Household Water"; B.Z. DIAMANT, "Environmental Health Impact of Heavy Metals in Wastewater Sludge Applied to Cropland"; I. SAITO, "Removal of Chromium (VI) in Aqueous Solutions by Activated Carbons"; K.K. CHIN and J.H. TAY, "Laboratory Scale Treatment of Nickel-Bearing Industrial Effluent"; C.P.C. POON, "Removal of Copper, Nickel, Zinc, Cadmium and Cyanide From Plating Wastewater by Electroflotation"; N.L GALE and B.G. WIXSON, "Control of Heavy Metals in Lead Industry Effluents by Algae and Other Aquatic Vegetation"; J. HRSAK and M. FUGAS, "Distribution of Particulate Lead, Zinc and Cadmium Around a Lead Smelter"; K SCHWITZGEBEL, R.V. COLLINS and R.T. COLEMAN, "Arsenic Discharge From a Primary Copper Smelter"; C.L. CHAPPELL and S.L. WILLETTS, "Isolation of Heavy Metals From the Environment"; A.N. CLARKE and D.J. WILSON, "The Removal of Metallo-Cyanide Complexes by Foam Flotation"; H.J. JEBENS, G.J. MEYERHOFER and D.J MASTERS, "Removal of Heavy Metals From Industrial Wastewaters", F. EL-GOHARY, M R. LASHEEN and H.I. ABDEL-SHAFY, "Trace Metal Removal From Wastewater Via Chemical Treatment".
Descriptors: Toxicology; Water pollution; Pollution abatement
Section Heading: 72 .(SPECIAL PUBLICATIONS) Journal Announcement: 8008

680080 79-720340
Advanced Pollution Control for the Metal Finishing Industry.
Kissimmee, Fla., 5-7 Feb. 1979
Pp 151, 81/2 x 11 in., Illustrated
Publ: U.S. Environmental Protection Agency, Cincinnati, Ohio 45268, May 1979
Language: ENGLISH
Document Type: BOOK
Contents include: M.E. BROWNING, J. KRALJIC and G.S. Finishing Sludge Disposal; Economic, Legislative and Technical for 1979"; C. ROY, "Methods and Technologies for Reducing the Electroplating Sludges"; P.S. MINOR and R.J. BATSTONE, Federal Republic of Germany's Centralized Waste Treatment Approach in United States"; F.A. STEWARD and H.H. HEINZ, "Economical Shop Case History"; J.A. BIENER, "City of Grand Rapids, Industrial Waste Control"; A.F. LISANTI and S.O. Proper Unit Processes for the Treatment of Electroplating Wastewaters"; PRICE and C. NOVOTNY, "Water Recycling and Nickel Recovery Exchange"; K.J McNULTY and J.W. KUBAREWICZ, "Field Closed-Loop Recovery of Zinc Cyanide Rinsewater Using Reverse Osmosis Evaporation"; J.L. EISENMANN, "Membrane Processes for Metal Electroplating Rinse Water"; M.C. SCOTT, "An EPA Heavy Metals Removal by Sulfide Precipitation"; C.P. HUANG and "The Development of an Activated Carbon Process for the Treatment of Chromium (VI)-Containing Plating Wastewater"; J. SANTO, et "Removal of Heavy Metals From Battery Manufacturing Wastewaters by Cross-Flow Microfiltration"; G.D. McKEE, "Status of Analytical Cyanide"; V.S. KATARI, R.W. GERSTLE and C.H. Degreaser Emissions".
Descriptors: Pollution abatement; Electroplating
Section Heading: 72 .(SPECIAL PUBLICATIONS) Journal Announcement: 7911

679872 79-580683
The Development of an Activated Carbon Process for the Treatment of Chromium (VI)--Containing Plating Wastewater.
Huang, C P ; Bowers, A R
Advanced Pollution Control for the Metal Finishing Industry, Kissimmee, Fla., 5-7 Feb. 1979
114-122
Publ: U.S. Environmental Protection Agency, Cincinnati, Ohio 45268, May 1979
Language: ENGLISH
Document Type: BOOK
The recent developments in the use of activated C for total Cr removal from plating wastewaters are discussed. The topics include interactions of (VI) with activated C in batch experiments and packed columns, operation of packed columns, regeneration of exhausted activated C by thermal, caustic, combined thermal-caustic and acid methods, and the removal of Cr (III). are given for the effects of C bed size, depth, increasing Cr concentration, number of regeneration cycles and effect of time and caustic concentration on desorption.20 refs --H.A D.
Descriptors: Chromium, Recovering; Electroplating; Water pollution; Activated carbon, Reactions (chemical); Effluents; Regenerators
Section Heading: 58 .(METALLIC COATING) Journal Announcemeht: 7911

668318 79-720170
The 33rd Industrial Waste Conference.
Lafayette, Ind., 9-11 May 1978
Pp 1028, 6 x 9 in., Illustrated
Publ: Ann Arbor Science Publishers Inc, P.O. Box 1425, Ann Arbor, Mich 48106, 1979
Language, ENGLISH
Document Type: BOOK
The Conference is under the direction of the Purdue University Civil Engineering and the Div. of Conferences and Continuation Services, cooperation with the Indiana State Board of Health, Indiana Stream Control Board, Indiana Environmental Management Board, Indiana Dept. Natural Resources, Indiana Section of the American Water Works Assoc., Water Pollution Control Assoc. and Indiana Section of the American Civil Engineers. Contents include: M.E. McGUIRE, D R. FAUSCH, "Pollution Control Through Water Conservation at a Gray Foundry"; W.C. KREYE, J.W. OLVER, H.C. SUTTON and Zinc Plating and Oil Bearing Washer Wastewater"; E.J. "Ammonia Steam Stripping at Miscellaneous Nonferrous Metals Plants, Histories"; W.M. WINN and E.L MORGAN, "Stream Ecosystem Municipal Sewage Discharges and Accommodation to Aluminum Industry Effluents"; W R. KNOCKE, T. CLEVENGER, M.M. GHOSH of Metals From Electroplating Wastes"; E L. LEE and R.E. of Oily Machinery Wastes"; D.M. SOBOROFF, J.D. TROYER One-Step Method for Recycling Waste Chromic Acid--Sulfuric Acid Solutions"; M.C. FISCHER, "Wet Scrubber Water Treatment in the Steel Industry Using Lamella Gravity Settlers"; J "Extended Aeration of Coke-Plant Effluents"
Descriptors: Waste disposal; Pollution abatement
Section Heading: 72 .(SPECIAL PUBLICATIONS) Journal Announcement: 7906

668068 79-580326
Treatment of Zinc Plating and Oil Bearing Washer Wastewater.
Kreye, W C ; Olver, J W ; Sutton, H C ; Vorch, F R
The 33rd Industrial Waste Conference, Lafayette, Ind , 9-11 May 1978
155-164
Publ: Ann Arbor Science Publishers Inc., P.O Box 1425, Ann Arbor, Mich. 48106, 1979
Language: ENGLISH
Document Type: BOOK
The treatment of Zn and Cr plating and washer wastewaters of a major manufacturer is described. Following a survey of the wastewaters, laboratory testing, treatment system evaluation, an interim treatment system and pilot testing, a final treatment system was built. Details and data are given for the system.--H.A.D.
Descriptors: Zinc plating; Chromium plating; Wastes; Water pollution; Pollution abatement
Section Heading: 58 .(METALLIC COATING) Journal Announcement: 7906

652203 79-720011
Proceedings of the 31st Industrial Waste Conference.
Bell, J M
Lafayette, Ind., 6-8 May 1976
Pp 1164, 6 x 91/4 in., Illustrated
Publ: Ann Arbor Science Publishers, Inc., P.O. Box 1425, Ann Arbor, Mich. 48106., 1976
Language: ENGLISH
Document Type: BOOK
Contents include: J. McVAUGH and W.T. WALL, Jr., Metals Wastewater Treatment Effluent Quality Vs. Sludge Treatment"; METRY and M.E. HARRIS, "A New Concept for Treating Leachate Runoff Waters From a Taconite Transshipment Facility"; M-H. Wu, and C-P. HUANG, "Regeneration of Activated Carbon for the Chromium"; W.E LINK and J.G. RABOSKY, "Fluoride Ion Waste-Water Employing Calcium Precipitation and Iron Salt WARNKE, K.G. THOMAS and S.C. CREASON, "Reclaiming Reverse Osmosis"; J.A. DRAGO and J.R. BUCHHOLZ, "Removal Contaminants From Aqueous Laboratory Wastes by Chemical Treatment"; PROBER, P.B. MELNYK and L.A MANSFIELD, "Treatment Furnace Effluents to Inhibit Formation of Iron-Cyanide Complexes"; HOCKENBURY, J.M. BOWER and A.W. LOVEN, "Metal Wastewater Treatment: a Case History".
Descriptors: Waste disposal; Pollution abatement
Section Heading: 72 .(SPECIAL PUBLICATIONS) Journal Announcement: 7901

652172 79-710041
Sulfex--a New Process Technology for Removal of Heavy Metals From Waste Streams.
Scott, M C
Proceedings of the 32nd Industrial Waste Conference, Lafayette, Ind., 10-12 May 1977
622-629
Publ: Ann Arbor Science Publishers, Inc., Ann Arbor, Mich., 1978
Language: ENGLISH
Document Type: BOOK
The Sulfex process described represents an economical and feasible approach to sulfide precipitation of heavy metals. As such it offers the advantages of more complete removal of metals from waste streams than hydroxide precipitation, generally at pH ranges which are acceptable discharge. It removes most chelated metals from wastewaters and reduces hexavalent -Cr as it precipitates the other heavy metals as sulfides. It is a new process which has been successfully piloted on three waste --AA
Descriptors: Sludge; Precipitation; Sulfides; Wastes; Chromium; Iron
Section Heading: 71 (GENERAL AND NONCLASSIFIED) Journal Announcement: 7901

652152 79-710021
Regeneration of Activated Carbon for the Adsorption of Chromium.
Wu, M-H ; Hsu, D Y ; Huang, C-P
Proceedings of the 31st Industrial Waste Conference, Lafayette, Ind., 6-8 May 1976
409-419
Publ: Ann Arbor Science Publishers, Inc., Ann Arbor, Mich., 1976
Language: ENGLISH
Document Type: BOOK
Recent studies have shown that Cr can be effectively removed by the C adsorption process, but the practical application of this technique to the treatment of industrial wastewater depends not only upon the adsorption capacity but also on the feasibility of regenerating the spent C. Research was conducted to study some physical and chemical techniques for the regeneration of Cr-loaded activated C. The activated C, Calgon filtrasorb effectively removed hexavalent Cr The removal efficiency is governed by pH and the ratio of Cr to C Among the three regeneration techniques studied--caustic desorption, thermal activation and a combined caustic-thermal process--the latter gave the best regeneration results, showing that > 97% of the original removal efficiency was maintained through three regeneration cycles. To achieve high adsorption and regeneration efficiencies, it is recommended that a relatively low initial Cr loading (e.g. 0 015 g Cr(VI)/g C) be applied for the adsorption cycle and that the used C be regenerated at a level of surface occupancy (e.g. 0.050 g Cr(VI)/g C) well below the max. adsorption capacity. 11 refs.--AA
Descriptors: Chromium, Sorption; Industrial wastes; Activated carbon, Sorption; Adsorption; Reclamation
Section Heading: 71 .(GENERAL AND NONCLASSIFIED) Journal Announcement: 7901

82-02169
Characterization of DDT in Factory Effluent by Thin-Layer Chromatography
Sharma, S.K.; Dave, J.V.
Sch. Environ. Sci., Jawaharlal Nehru Univ., New Delhi, India
ENVIRON. INT VOL. 4, NO. 516, pp. 391-395, Publ.Yr: 1980
SUMMARY LANGUAGE - ENGLISH
Languages: ENGLISH
Thin-layer chromatography (TLC) is shown as an effective, inexpensive, reliable, and less time-consuming technique for simple and effective monitoring of persistent toxicant-like present in its manufacturing plant effluent Aqueous untreated and treated grab and compost effluent samples were collected, extracted with a solvent and concentrated and chromatographed both for qualitative and quantitative analysis for p,p'-DDT and related compounds. This technique was sucessful and can form an effective, inexpensive method to be used by the developing countries, which have limited financial resources.
Descriptors: chromatography; DDT; effluents; monitoring; toxicants; pollutant detection; wastewater treatment; cost benefit analysis

82-02090
Economical and Efficient Phosphorus Control at a Domestic-Industrial Wastewater Plant
Van Dam, D.
Address Not Stated
J WATER POLLUT. CONTR. FED VOL. 53, NO. 12, pp. 1732-1737, Publ.Yr: 1981
SUMMARY LANGUAGE - ENGLISH
Languages ENGLISH
It is the purpose of this paper to discuss the special challenges the merged waste flow posed to design and subsequent operation of the treatment plant. How concentrated side streams, such as heat treatment supernatants, must be considered in overall plant efficiency is discussed. The techniques used to control phosphorus at a very low cost are presented. A summary of several years of plant efficiency and cost figures accompany the text. The Grand Haven, Mich., wastewater plant was designed to best accomodate the domestic wastewater from Grand Haven and the adjacent village of Spring Lake, as well as a sizable contribution of wastes from a local chrome and vegetable tanning operation. Five-year operating results and cost experience of phosphorus control with the addition of waste pickle liquor to primary settling tank influent followed by activated sludge treatment is shown.
Descriptors: wastewater treatment plants; economics; phosphorus; activated sludge process; technology; cost benefit analysis; chromium; settling basins

82-02074
Fate of Priority Pollutants in Large Municipal Treatment Plants
Lue-Hing, C.; Lordi, D.T.; Kelada, N.P.
Metro. Sanitary Dist. Greater Chicago, IL
AIChE Nat. Mtg. Boston, Portland, Chicago 1980
IN "WATER - 1980 VOL. 77, NO. 209, pp 144-150, Publ.Yr: 1981
AICHE, 345 EAST 47 ST., NEW YORK, NY 10017
SUMMARY LANGUAGE - ENGLISH
Languages: ENGLISH
The U.S. Environmental Protection Agency has issued a list of 129 priority pollutants which include metals, cyanides, phenols, pesticides and other organics. The Metropolitan Sanitary District of Greater Chicago (MSDGC) which operates seven treatment plants has regulated heavy metals, phenols and cyanides for a number of years The heavy metals found in the influents include chromium, copper, zinc, iron, nickel, and cadmium. Substantial but variable removals do occur with the effluents reaching some background level for a specific metal. These metals are found to concentrate in the treatment plant sludges. The results of a screening of the occurrence of the priority organics at four of the MSDGC treatment plants showed relatively few organics occurring in detectable quantities. The concentrations of those found were highly variable but generally less than 100 mu g/l in the influents and less than 20 mu g/l in the effluents.
Descriptors: pollutants; organic compounds; heavy metals; effluents; wastewater treatment plants; sludge; cyanides; phenol; pesticides; contamination

82-02013
Water Purification System

Shorr, J.
Sys. Eng. & Mfg. Corp., Stoughton, MA
U.S. PAT. OFF. GAZ.
VOL. 1007, NO. 5, p. 2034, Publ.Yr: 1981
Pat. No. 4,276,176
Languages. ENGLISH
A method of purifying water including, combining at least 1700 ppm of a combining agent with wastewater at a pH of from 7.1 to 14 with the molar ratio of said combining agent to the impurities in said wastewater being 1:1 or greater so that a particle-water blend is formed wherein said impurities are bound with said combining agent in particles of size at least 10 angstroms; said combining agent including inorganic metal hydroxide with the metal being selected from the group consisting essentially of iron aluminum, tin, copper, zinc, cadmium nickel, cobalt, silicon, barium, calcium, manganese, and chrome.
Descriptors: Purification; Wastewater treatment; Particle sizes; Inorganic compounds; pH; Patent; Heavy metals; Water management; Particle size

82-00578
Industrial Waste-Water Reuse by Selective Silica Removal
Matson, J.V.
Houston, TX
U.S. PAT OFF. GAZ VOL. 1007, NO. 5, p 2035, Publ.Yr: 1981
Pat. No. 4,276,180
Languages: ENGLISH
A method for maintaining silica content in a recirculating cooling water system containing water conditioning chemicals selected from the group consisting of sulfates, phosphonates and chromates below a level at which silica scale formation occurs without discharging blowdown from the system with consequential elinimation from the system of said water conditioning chemicals or resulting pollution of the environment, which include continuously diverting a portion of the chemically conditioned cooling water from said cooling system as a side stream.
Descriptors. Cooling systems; Industrial effluents; Wastewater treatment; Water reuse; Chemicals; Environmental protection, Activated alumina; Patent

82-00563
Rening av Kromhaltigt Avloppsvatten och Ateranvandning av Utfallt Krom Vid Elmo-Calf AB, Svenljunga
Emanuelsson, I.; Persson, C E ; Horrdin, S
Scandiaconsult AB, Goteborg
VATTEN VOL. 36, NO. 4, pp. 343-351, Publ.Yr 1980
Languages· ENGLISH
At Elmo-Calf tannery a new system for recovering chromium has been installed. Earlier some process liquors were recirculated back to the process. But the amount of chromium in the waste water was too high. The new system was worked out through laboratory tests and tests in pilot plant. During the tests magnesium oxide together with anionic polymers were used. The full scale plant was then constructed for precipitation with either magnesium oxide or sodium carbonate. The plant which has been in operation with sodium carbonate as precipitation agent since 1978 with good results, consists of batchwise precipitation and settling of the wastewater and thickening and dewatering and dissolving the sludge. As dissolving agent concentrated sulfuric acid has been used. The chromium liquor is then recirculated to the tanning processes.
Descriptors: Tanning industry wastes; Chromium; Sludge dewatering; Polymers; Recycling; Wastewater treatment
Identifiers: Elmo Calf tannery

81-07214
Two Step Removal of Metal Ions From Effluents
Cassella, V.J.; Irani, M.R.
PQ Corp., Valley Forge, PA
U.S. PAT. OFF. GAZ VOL. 1004, NO. 3, p 1131, Publ.Yr· 1981
Pat. No. 4,256,577
Languages: ENGLISH
A process for reducing the metal ion concentration of aqueous effluents to less than 0.1 part per million (ppm) consisting of the sequential steps of: a. Agitating an aqueous effluent containing up to 1500 ppm of a metal ion selected from the group consisting of divalent manganese, copper, cadmium, lead, iron, cobalt, nickel and zinc and trivalent chromium and iron; b. Adding an aqueous solution of an inorganic base to adjust the pH of the effluent to a value between 7.0 and 9.0.
Descriptors: Heavy metals; Effluents; Ions; Wastewater treatment; pH; Patent

81-07183
New Method of Regeneration of Anion Exchangers Used for Recovering Chromates From Wastewater
Pawlowski, L.; Klepacka, B.; Zalewski, R.
Dept. Chem. Tech., Inst. Chem., Lublin, Poland
WATER RES VOL 15, NO. 10, pp. 1153-1156, Publ.Yr: 1981
Languages: ENGLISH
A new economically attractive method of recovery of water and chromates from wastewater has been presented. In order to obtain a high enough concentrated regeneration effuent for refilling plating bath, high concentrated sodium hydroxide (45%) was used for regeneration of a weakly based anion exchanger bed (Wofatit AD 41). Further increase of the concentration of the regeneration effluent was obtained by recycling certain frontal and tail parts of regeneration effuent to raw wastewater. It permits to recycle only a high concentrated part of the regeneration effluent to refilling the plating bath. The influence of flow rates, doses of sodium hydroxide and recirculation ratio on the average concentration of the regeneration effluent and ion exchange capacity has been presented.
Descriptors: Effluents; Resource management; Wastewater treatment; Recycling; Flow rates; Chromates; Sodium compounds; Anion exchangers

81-07175
Elimination of Toxic Metals From Wastewater by an Integrated Wastewater Treatment/Water Reclamation
Smith, R.; Wiechers, S.G.
Nat. Inst. Water Res. Council Sci. & Indust. Res., Rep. S. Afr.
WATER SA VOL. 7, NO. 2, pp. 65-70, Publ.Yr: 1981
Languages: ENGLISH
The overall effectiveness of a pilot-scale, integrated wastewater treatment/water reclamation plant for the removal of the eight toxic metals listed in the U.S. Environmental Protection Agency National Interim Primary Drinking Water Regulations (arsenic, barium, cadmium, chromium, lead, mercury, selenium and silver) was investigated. Certain unit processes in the system were shown to be capable of acting as additional safety barriers against toxic metal contamination. The most significant processes for toxic metal removal were denitrification, chemical mixing/clarification and active carbon treatment.
Descriptors: Wastewater treatment; EPA; Federal regulations; Toxic metals; Contaminants; Activated carbon

81-07159
Treatment of Paint-Stripping Wastewaters Which Contain Phenol and Chromium
Barnes, D.; O'Hara, M.; Samuel, E.; Waters, D.
Sch. Civil Eng., Univ NSW, Kensington, Austral
ENVIRON TECH. LETT VOL. 2, NO 2, pp. 85-94, Publ.Yr: 1981
Languages: ENGLISH
The wastewaters from paint stripping and surface treatment operations on aircraft contain a range of materials including phenolic compounds and chromium. The wastewaters are generated erratically and only during part of the paint stripping, repainting cycle. A Fenton's reagent system employing 100-200 mg.L super(-) super(1) of ferrous iron and hydrogen peroxide at a weight ratio of hydrogen peroxide to phenol of 2.5-3.0 to 1, has been shown to oxidise phenols and reduce any hexavalent chromium to trivalent chromium. Subsequent lime treatment removed the organic residues, chromium and phosphate into the sludge and produced a supernatant suitable for discharge to sewers and subsequent biological treatment. The laboratory results have been confirmed by pilot plant scale studies.
Descriptors: Wastewater; Phenol compounds; Chromium; Lime; Laboratory methods; Contaminants; Paint stripping; Surface treatment; Aircraft

81-07129
Mechanical Aeration Versus Hydrogen Peroxide in Stabilization Pond Treatment
Iwugo, K.O.
Publ. Health Eng., Univ. Lagos.
EFFLUENT AND WATER TREAT. J VOL 21, NO. 1, pp. 8-18, Publ.Yr: 1981
Languages: ENGLISH
This article presents the results of laboratory investigations on the treatment of molasses-based yeast and chrome-based tannery wastewaters in waste stabilization ponds.
Descriptors: Tannery industry wastes; Wastewater; Ponds; Laboratory methods; Water treatment

81-07018
Chrome Removal Waste Treatment Process
Cassidy, J.D.; Steinbrecher, L.
Amchem Prod., Inc., Ambler, PA
U.S. PAT. OFF. GAZ VOL. 1005, NO. 1, p. 256, Publ.Yr. 1981
Pat. No. 4,260,491
Languages: ENGLISH
In a process for the removal of chrome from waste water which includes chromium in the hexavalent valence state, wherein the pH of said waste water is adjusted to below about 5, wherein a reducing agent is added to said waste water while its pH is below about 5 in an amount sufficient to convert all of the chromium present in the hexavalent valence state to the trivalent valence state.
Descriptors: Wastewater treatment; pH; Chromium; Pollution control; Patent

81-05676
Main Compounds Behavior in Kraft Wastes Cleaning by Acid Coagulation and Carbon Adsorption
Aguado, J.; Rodriguez, J.J.; Tijero, J.
Dept. Quimica Indust., Fac. Ciencias Quimicas, Univ. Complutense, Madrid, Spain
J. ENVIRON. SCI. HEALTH VOL. A16, NO. 4, pp. 405-418, Publ.Yr: 1981
Languages: ENGLISH
A kraft wastewater cleaning method, consisting in acid coagulation and carbon adsorption is studied on a chemical basis. The results obtained show that acid coagulation mainly produces a precipitation as well as a partial acidolysis of lignin compounds; a certain retention of cellulosic compounds was also noticed. Subsequent carbon adsorption substantialy removes carbohydrates and practically all of the remaining ligninic compounds.
Descriptors: Paper industry wastes; Precipitation; Carbon; Adsorption; Wastewater treatment; Spectroscopy; Chromatography

81-05600
Quantification of the Munitions, HMX, RDX, and TNT in Waste Water by Liquid Chromatography
Cattran, D.E.; Stanford, T.B ; Graffeo, A.P.
Dept. Secretary Army, Wash., DC
U.S. PAT OFF. GAZ VOL. 1003, NO. 4, p. 1557, Publ.Yr: 1981
Pat. No 4,252,537
Languages: ENGLISH
A method for the quantitative detection of aliphatic nitroamine and nitroaromatic munitions selected from the group consisting of 1,3,5,7-tetranitro-1,3,5,7-tetraazacyclooctane, 1,3,5-trinitro-1,3,5-triazacyclohexane, 2,4,6-trinitrotoluene, combinations thereof, and the degradation products thereof, in liquid samples, which includes (a) directly injecting up to 400 microliters of a non-concentrated liquid sample containing said munitions in trace amounts as low as 25 parts per billion onto a reverse phase, high performance liquid chromatographic column; (b) chromatographically separating said munitions on said column by elution with a mobile phase comprising methanol and water; and, (c) monitoring the absorbance of the resulting eluant in the ultra-violet region to provide a quantitative determination of the munitions present in said sample.
Descriptors: Wastewater treatment; Liquid chromatography; Absorption; Water sampling; Purification; Chemicals; Patent

81-05578
Elimination of Toxic Metals From Wastewater by an Integrated Wastewater Treatment/Water Reclamation System
Smith, R.; Wiechers, S.G.
Nat. Inst. Water Res. Council Sci. Indust. Res., Pretoria, Rep. S. Africa
WATER SA VOL. 7, NO 2, pp. 65-70, Publ.Yr: 1981
Languages: ENGLISH
The overall effectiveness of a pilot-scale, integrated wastewater treatment/water reclamation plant for the removal of the eight toxic metals listed in the U.S. Environmental Protection Agency National Interim Primary Drinking Water Regulations (arsenic barium, cadmium, chromium, lead, mercury, selenium and silver) was investigated. Certain unit processes in the system were shown to be capable of acting as additional safety barriers against toxic metal contamination. The most significant processes for toxic metal removal were denitrification, chemical mixing/clarification and active carbon treatment.
Descriptors: Wastewater treatment; Potable waters; Heavy metals; Contamination; Activated carbon; EPA; Federal regulations; Water reuse

81-05574
Activated Sludge and Activated Carbon Treatment of a Wood Preserving Effluent Containing Pentachlorophenol
Guo, P.H.M.; Fowlie, P.J.A.; Cairns, V W.; Jank, B.E.
Wastewater Tech. Ctr., Environ. Protect. Serv., Environ. Can.
Publ.Yr: 1980
ENVIRONMENTAL PROTECTION SERVICE, ENVIRONMENT CAN., OTTAWA, ONT. K1A 1C8, CAN.
ISBN. 0-662-10978-3; Rept. No. EPS 4-WP-80-2
Languages: ENGLISH
A six-month monitoring and wastewater treatment plant effluent upgrading program was carried out at Abitibi-Northern Wood Preservers Limited, Thunder Bay, Ontario, a plant which preserves wood with creosote, pentachlorophenol (PCP) and chromated copper arsenate (CCA). Treatment of the wastewater, after oil separation and flow equalization by the extended aeration activated sludge process, gave good removal of most organics; however, PCP removal averaged only 35% and the effluent was toxic to rainbow trout. Treatment of the activated sludge effluent by carbon adsorption resulted in effective PCP removal and non-toxic effluents. Activated carbon treatment of wastewater, after oil separation and flow equalization, gave good removals of organics and PCP.
Descriptors: Wastewater treatment plant; Effluent; Aeration; Activated sludge process; Toxic materials; Contaminants; PCP compounds

81-05377
Heavy Metals in the Ruhr River and Their Budget in the Catchment Area
Imhoff, K.R.; Koppe, P.; Dietz, F.
Ruhrverband, FRG
10th Int. Conf Int. Assoc. Water Pollut. Res. (IAWPR) Toronto, Ont. Jun. 23-27, 1980
WATER SCI. & TECH VOL. 13, NO. 1, Publ.Yr: 1981
Languages: ENGLISH
Numerous analyses of heavy metals have been evaluated with respect to origin, concentration, behavior and fate of these elements in the 4.488 km super(2) large catchment area of the most intensively used Ruhr River. For the ratio of the dissolved and the total heavy metal concentration in Ruhr water the following topological progression with increasing dissolved fraction results: lead< copper< zinc< nickel< chromium< cadmium. A heavy metal balance has demonstrated that 55% of the heavy metals in the Ruhr River are discharged from municipal and industrial waste water treatment plants. 45% are of geochemical origin. The municipal treatment plants receive 31% of the heavy metals from domestic and 69% from industrial waste water. These figures represent the average of all analysed heavy metals. The fraction of the particular elements varies considerably. For example 90% of the chromium, 65% of nickel and cadmium and 50% of copper and zinc are discharged by industries. The "population equivalent" of heavy metals was calculated from the results of 19 plants receiving only domestic waste water deducting the fraction contained in the drinking water.
Descriptors: Heavy metals; Rivers; Industrial effluents; Wastewater treatment plants; Potable water
Identifiers: Ruhr River

81-04011
Control of Pollution in Waters Containing Heavy Metals
Kincannon, D.F.; Bates, M.H.; DeVries, R.N.
OK St. Univ., Stillwater, Sch Civil Eng
Publ.Yr. 1980
NTIS, SPRINGFIELD, VA
PB81-124133
Languages: ENGLISH
An integrated set of experiments wre carried out on the fate of chromium and copper in biological waste water treatment processes, aqueous environments, and soil systems. A rotating biological contactor and activated sludge were used as the waste water treatment processes; Stillwater, Oklahoma area lake and river water and sediments, as the aqueous environments; and sandy and red silty clay soils, as the soil systems. While it was determined that chromium was removed by the lake and river sediments but not generally removed by biological treatment processes or by algae, it was found that copper was removed by all systems. Removal efficiencies of the metals were highly dependent upon operating and environmental conditions. Sediments and soils had strong affinities for copper, and uptake could be correlated with soil type.
Descriptors: Wastewater treatment; Activated sludge process; Soils; Freshwater environments; Algae; Heavy metals

81-03981
Type A Zeolite in the Activated Sludge Process-II: Heavy Metal Removal
Carrondo, M.J.T.; Lester, J.N.; Perry, R.
Publ. Health Eng. Lab., Imperial Coll., London, G.B.
J. WATER POLLUT. CONTR. FED. VOL. 53, NO. 3 , pp. 344-351 , Publ.Yr: 1981
Languages: ENGLISH
Pilot plant studies were conducted over a range of type A zeolite concentrations expected in settled wastewater and at two degrees of calcium exchange for sodium in the zeolite. Two hydraulic regimes also were examined. An identical pilot plant, operating under conditions identical to those of the test unit and to which no zeolite was added, provided a control. At the high calcium exchange rate, no effect was detected on heavy metal removal. At the low calcium exchange, the removals of cadmium, chromium, nickel, and lead were unaffected. There also seemed to be a slight deterioration in zinc removal and an equally small improvement in copper removal, but the evidence for both was inconclusive The general order of decreasing removal observed was Cu > Cr, Zn, Pb > Cd > Ni. Although not studied so intensively, the removal of iron seemed to be unaffected by zeolite.
Descriptors: Activated sludge process; Wastewater treatment; Heavy metals; Water pollutants; Chemical compounds
Identifiers. zeolite

81-03936
Activated Carbon Processes for the Treatment of Chromium (VI)-Containing Industrial Wastewaters
Bowers, A.R.; Huang, C.P.
Environ. Eng. Prog., Dept. Civil Eng., Univ. DE, Newark
10th Int. Conf. Int. Assoc Water Pollut. Res. (IAWPR) Toronto, Ont. Jun. 23-27, 1980
WATER SCI. & TECH. VOL. 13, NO. 1 , Publ.Yr: 1981
Languages: ENGLISH
Various operational systems using activated carbon for the removal of Chromium (VI) from synthetic wastewaters have been examined in the laboratory. The influence of controllable parameters, such as pH, Cr(VI) concentration, column depth, and mixing in solution were evaluated for the possibility of scale-up to an economically feasible treatment system. Completely-mixed, column, and rotating carbon disk systems were compared as system design alternatives.
Descriptors: Activated carbon; Wastewater treatment; Chromium; Heavy metals; Economics; Engineering; Water purification

81-03878
Treatment Effects and Pollution Dangers of Secondary Effluent Percolation to Groundwater
Idelovitch, E ; Michail, M.
Sewage Reclam Dept , Tel Aviv, Israel
Tenth Int Conf. IAWPR Toronto, Ont. Jun 23-27, 1980
WATER SCI. & TECH. VOL. 13, NO. 2 , Publ.Yr: 1981
Languages· ENGLISH
Percolation of secondary effluent from oxidation ponds to the groundwater aquifer, which was studied in a large-scale field operation, acted as an efficient advanced wastewater treatment system. The major processes involved were: slow sand filtration, biological degradation, nitrification, denitrification, chemical precipitation, adsorption and ion exchange. Excellent removal was obtained by effluent passage through the soil-aquifer system for several important pollutants, including: phosphorus, particulate organic matter, coliform bacteria, cadmium and chromium. Good removal was also obtained for soluble organics (expressed as DOC or filtered KMnO sub(4) consumption).
Descriptors: Effluent treatment; Oxidation; Groundwaters; Aquifers; Filtration; Biodegradation; Denitrification; Nitrification; Adsorption; Ion exchange; Wastewater treatment

81-03090
Hexachlorocyclopentadiene Contamination of a Municipal Wastewater Treatment Plant
Kominsky, J.R.; Wisseman, C.L.; Morse, D.L.
Nat. Inst. Occup. Safety Health, Cincinnati, Oh.
AM. INDUST. HYG. ASSOC. J. VOL. 41, NO. 8 , pp 552-556 , Publ.Yr: Aug. 1980
Languages: ENGLISH
In Mar. 1977 hexachlorocyclopentadiene (HCCPD) and octachlorocyclopentene (OCCP) entered the Morris Forman Wastewater Treatment plant in Louisville, Kentucky. Airborne HCCPD concentrations of a blue haze generated by cleanup procedures measured 19,200 ppb. A NIOSH questionnaire sought information on type and duration of symptoms. HCCPD and OCCP were collected on pre-extracted Chromosorb 102 (20/40 mesh) packed into a 7 cm long 4 mm ID glass tube and then analyzed using a gas chromatograph equipped with a flame ionization detector. The type of protective equipment used varied with the conditions of exposure. Usable responses to medical questionnaires were received from 177 treatment plant employees.
Descriptors: TOXICOLOGY AND HEALTH
Identifiers: hexachlorocyclopentadine contamination of wastewater treatment plants

81-02773
Trace Organic Behavior in Soil Columns During Rapid Infiltration of Secondary Wastewater
Bouwer, E.J.; McCarty, P.L.; Lance, J.C.
Environ. Eng. Sci., Civil Eng. Dept., Stanford, CA
WATER RES. VOL. 15, NO. 1 , pp. 151-159 , Publ.Yr: 1981
Languages: ENGLISH
Secondary treated municipal wastewater from the City of Phoenix was applied to three laboratory-scale soil columns at various infiltration rates typical of high-rate land application systems, and a fourth column was inundated with tapwater to serve as a control. Samples of the column influent and effluent streams, collected with continuous flow-through systems to prevent organic volatilization losses, were analyzed for organic compounds using gas chromatography/mass spectrometer. This study was performed to give a general indication of the behavior of trace organics in soil column systems with an attempt to indicate the presence of various removal processes.
Descriptors: SEWAGE & WASTEWATER TREATMENT; LAND POLLUTION
Identifiers: trace organic behavior in soil columns during infiltration of wastewater

81-02772
Efficiencies of Liquid-Liquid Extraction and XAD-4 and XAD-7 Resins in Collecting Organic Compounds From a Coke Plant's Effluent
Schaeffer, D.J.; Tigwell, D.C.; Somani, S.M.; Janardan, K.G.
IL E.P.A. Springfield, IL
BULL. ENVIRON. CONTAM. TOXICOL. VOL. 25, NO. 4 , pp. 569-573 , Publ.Yr: Oct. 1980
Languages: ENGLISH
The authors have examined the theoretical requirements of composite sampling, the propagation of errors which occur from sampling through identification, and the efficiency of sampling methods using capture-recapture methods. Estimates of the total number of compounds which might be identifiable by gas chromatograhpy-mass spectrometry, have been made. The theoretical findings have been translated into practice by the development of a multichannel sampler (Tigwell and Schaeffer 1980) which permits the simultaneous collection of a sample by up to four methods. The present paper will describe how these elements interplayed in a study of a coke plant's waste water.
Descriptors: SEWAGE & WASTEWATER TREATMENT
Identifiers: organic compounds extraction from coke plant effluents

81-02759
Ion Exchange in the Recycling of Plating Effluents
Pawlowski, L.; Zalewski, R.
Inst. Chem. Inst. Math Marie Curie-Sklodowsda Univ
EFFLUENT AND WATER TREAT J VOL. 20, NO. 12 , pp 581-585 , Publ Yr. Dec 1980
Languages: ENGLISH
Decationized wastewater is directed onto weakly base ion exchanger bed Amberlite IRA 67. The cation exchanger bed is regenerated by means of 5% H sub(2)SO sub(4). The anion exchanger bed is regenerated with 10% NaOH. Some fractions of the front and tail of the regeneration effluent are recycled into raw wastewater to increase the concentration of the regeneration effluent. Using computer analysis it was shown that recirculation of about 23% of chromates contained in the regeneration effluent into raw wastewater increases twice the concentration of the recovered concentrate of chromates from about 25g to 47g Cr super(+6)/dm super(3).
Descriptors: SEWAGE & WASTEWATER TREATMENT
Identifiers: ion exchange in recycling of plating effluents

81-02703
Influence of Sludge Age on Heavy Metal Removal in the Activated Sludge Process
Sterritt, R.M.; Lester, J.N.
Publ. Health Eng. Lab , Imperial Coll., London, Engl.
WATER RES. VOL. 15, NO. 1 , pp. 59-65 , Publ.Yr: 1981
Languages. ENGLISH
In a laboratory simulation of the activated sludge process ten heavy metals were added continuously to the system which was allowed to equilibrate at six sludge ages between 3 and 18d. Cobalt, manganese and molybdenum removals were poor and were unaffected by changes in the sludge age The highest removal efficiencies for the other metals occurred at the 15d sludge age. Chromium (trivalent) and cadmium had the highest removal efficiencies, typically greater than 50%. The behaviour of the majority of the metals which were removed to a significant extent was related to one of the parameters influenced by sludge age. The metals which were poorly removed showed little affinity for the activated sludge.
Descriptors: SEWAGE & WASTEWATER TREATMENT
Identifiers: sludge age influence on heavy metal removal

81-02692
Comparison of the Characteristics of Soluble Organic Nitrogen in Untreated and Activated Sludge Treated Wastewaters
Parkin, G.F ; McCarty, P.L.
Dept. Civil Eng., Drexel Univ., Phila., PA
WATER RES. VOL. 15, NO. 1 , pp. 139-149 , Publ.Yr: 1981
Languages: ENGLISH
Soluble organic materials containing nitrogen (SON) are present in effluents from activated sludge treatment of domestic wastewater, but little is known about the sources and characteristics of these materials. The characteristics of SON in untreated wastewaters and activated sludge effluents were evaluated. Characterization techniques used included low microbial seed biodegradability, molecular weight distribution using gel filtration chromatography, removal by activated carbon and ion exchange, and analysis for free and combined amino acids.
Descriptors: SEWAGE & WASTEWATER TREATMENT
Identifiers: organic nitrogen in untreated and treated sludge treated wastewater

81-02680
Field Disposal of Methyl Parathion Using Acidified Powdered Zinc
Butler, L C.; Staiff, D.C.; Davis, J.E.; Sovocool, G.W.
Wenatchee Pesticides Res. Br., Health Effects Res. Lab., U.S. EPA, Wenatchee, Wa.
J. ENVIRON. SCI. HEALTH VOL. B16, NO. 1 , pp. 49-58 , Publ Yr: 1981
Languages· ENGLISH
The degradation of methyl parathion in soil with various amounts of acidified powdered zinc under field conditions was studied. Treatment was progressively more effective with increasing amounts of zinc Disappearance of parent compound was followed for 2 1/2 years. The expected conversion product aminomethyl parathion and its N-methyl derivative were formed. Aminomethyl parathion was shown to be identical to an authentic standard The other specific positional isomers were considered likely, but were not proven by mass spectrometry. Structure elucidation was made with high resolution mass spectrometry, using the direct insertion probe, and with gas chromatography/low resolution mass spectrometry.
Descriptors SEWAGE & WASTEWATER TREATMENT
Identifiers field disposal of methyl parathion

81-01797
Foam flotation treatment of industrial wastewaters: Laboratory and pilot scale.
Wilson, D J ; Thackston, E. L.
Vanderbilt Univ., Nashville, TN 37235
U.S Environmental Protection Agency. Office of Research and Development Environmental Protection Technology Series Coden EPTSBT Publ Yr· Jun 1980
Illus. 90 refs.
Abs. (Available from NTIS, Springfield, VA 22161)
Languages: ENGLISH
TREATMENT CODES: D .(DESCRIPTIVE) ; I .(INVESTIGATIVE/OBSERVATION)
A floc foam flotation pilot plant removed Pb and Zn in dilute aqueous solution to quite low concentrations. Design improvements are presented. The floc foam flotation of Zn is readily carried out with aluminum hydroxide ($Al(OH)_3$) and sodium lauryl sulfate (NLS). Chromium hydroxide is floated with NLS, but adsorbing colloid flotation of Cr^{+3} with ferric hydroxide ($Fe(OH)_3$) or $Al(OH)_3$ yielded better results. Cobalt and Ni levels are reduced to =1 mg/L by flotation with $Al(OH)_3$ and NLS. The Mn^{+2} levels can be reduced to 1-2 mg/L by flotation with $Fe(OH)_3$ and NLS. Floc foam flotation of Cu was compatible with several precipitation pretreatments (soda ash, lime, $Fe(OH)_3$, and $Al(OH)_3$), although modifications were needed to prevent interference from excessive Ca or CO_3^{-2}. Therefore, floc foam flotation can be used as a polishing treatment. The flotation of mixtures of Cu^{+2}, Pb^{+2}, and Zn^{+2} was conducted using $Fe(OH)_3$ and NLS. The flotation of simple and complexed cyanides and mixtures of metal cyanide complexes was also conducted with $Fe(OH)_3$ and NLS; a pH of =5 is optimum. A surface adsorption model for floc foam flotation was analyzed and accounted for the effects of surfactant concentration, ionic strength, specifically adsorbed ions, and surfactant hydrocarbon chain length. (AM)
Descriptors: Flotation; Industrial wastes; Wastewater treatment; Pilot plants; Engineering; Flocculation; Ions; Surfactants; Iron compounds; Aluminum compounds; Heavy metals; Zinc; Nickel; Manganese; Chromium; Cobalt; Copper; Lead; Chemical treatment; Adsorption
Identifiers: floc foam flotation

81-01795
Sulfide precipitation of heavy metals.
Robinson, A. K., Sum, J. C.
Boeing Commercial Airplane Co., Manufacturing Research and Development, P O. Box 3707, Seattle, WA 98124
U.S. Environmental Protection Agency. Office of Research and Development Environmental Protection Technology Series Coden: EPTSBT Publ Yr: Jun 1980
illus. 16 refs.
Abs. (Available from NTIS, Springfield, VA 22161)
Languages: ENGLISH
TREATMENT CODES: I .(INVESTIGATIVE/OBSERVATION) ; D .(DESCRIPTIVE) ; E .(ECONOMIC/COMMERCIAL/MARKET)
The sulfide precipitation of heavy metals from industrial wastewaters was evaluated. Five processes were compared in bench-scale, continuous-flow equipment-conventional lime processing, conventional lime processing plus filtration, lime with a sulfide polishing and filtration, lime with sulfide, and lime with sulfide plus filtration. Wastewater samples from 14 metal working industries were processed through the bench-scale equipment using all 5 processes. Reductions in the concentrations of Cd, Cr, Cu, Ni, and Zn, plus selected other metals, were measured by atomic absorption chemical analysis. Capital and operating costs for the processes were compared for 3 plant sizes-37 85 m3/d (10,000 gpd), 757 m3/d (200,000 gpd), and 1,893 m3/d (500,000 gpd). To reduce the levels of Cd, Cu, Ni, or Zn from a wastewater treatment plant using conventional lime processing, the addition of a final filtration should be considered first. If filtration does not achieve the desired low levels, then a sulfide polishing process with added filtration is recommended. If reduction of the levels of Cr, Pb, Ag, or Sn is required, the conventional lime process plus filtration is recommended. The sulfide process did not significantly reduce the levels of these metals. Details are included on the use of a specific ion electrode for the control of sulfide additions. (AM)
Descriptors: Heavy metals; Precipitation; Wastewater treatment; Sulfur compounds; Industrial effluents; Lime; Filtration; Metal industry wastes; Economics; Engineering; Cadmium; Copper; Chromium; Nickel; Zinc; Chemical treatment
Identifiers: sulfite precipitation

81-01755
Kinetic model for chromate reduction in cooling tower blowdown.
Kunz, R. G.; Hess, T. C.; Yen, A. F.; Arseneaux, A. A.
Air Products and Chemicals, Inc., P.O. Box 538, Allentown, PA 18105
86th national meeting of the American Institute of Chemical Engineers Houston, Texas Apr 1-5, 1979
American Institute of Chemical Engineers
Water Pollution Control Federation. Journal 52(9), 2327-2339, Coden: JWPFA5 Publ Yr: Sep 1980
illus. 29 refs.
Eng., Fr , Ger., Port., Span abs.
Languages ENGLISH
Doc Type: JOURNAL PAPER CONFERENCE PAPER
TREATMENT CODES: T .(THEORETICAL/MATHEMATICAL) ; D .(DESCRIPTIVE)
A model was developed to represent the liquid-phase reduction of Cr+6 by SO2, the simultaneous competitive reaction of DO with SO2, and O2 reaeration. The model is applicable to both batch and continuous stirred tank reactors and gives conservative results compared to batch and continuous-flow data. Sulfur dioxide and its salts reduce Cr+6 to Cr+3. The reaction rate increases with increasing reactant concentration and temperature and decreasing pH. Residual Cr is lower in a batch reactor than in a continuous reactor of equal residence time. DO competes with Cr+6 for SO2. Oxygen-saturated cooling tower blowdown is the initial source of O2 to the reaction, and O2 enters the system by reaeration as the DO concentration is depleted. Reaeration can be significant and is a serious enemy of chromate reduction. (AM.FT)
Descriptors: Mathematical models; Kinetics; Chromium; Heavy metals; Cooling systems; Reduction; Sulfur compounds; Chemical reactions; Chemical treatment; Wastewater treatment; Sulfur dioxide; DO; Aeration
Identifiers: cooling tower blowdown; Cr(VI); hexavalent Cr

81-01723
Pretreatment of industrial discharges to publicly owned treatment works.
Ongerth, J. E.; DeWalle, F. B.
Brown and Caldwell Engineers, 600 First Ave., Seattle, WA 98104
Water Pollution Control Federation. Journal 52(8), 2246-2256, Coden: JWPFA5 Publ.Yr: Aug 1980
illus. no refs.
Eng., Fr., Ger., Port., Span. abs.
Languages: ENGLISH
Doc Type: JOURNAL PAPER CONFERENCE PAPER
TREATMENT CODES: I .(INVESTIGATIVE/OBSERVATION)
The effectiveness of an industrial pretreatment program to limit the discharge of toxic metals and organics into publicly owned treatment works was evaluated. Measured median industrial discharge concentrations were as follows: 0.69 mg/L Zn; 0.65 mg/L Cu; 0.17 mg/L Pb; 0.29 mg/L Cr; 0.10 mg/L Ni; and 0.02 mg/L Cd. Analysis of wastewater from different treatment plants showed the presence of 36 priority pollutants. All groups but phthalates showed an increase with increasing plant flow and percentage of industrial contribution, indicating that industrial pretreatment can reduce wastewater concentration levels by >1/2. Primary treatment was effective in removing high molecular weight compounds, and secondary treatment can remove volatile compounds through air stripping and additional adsorption and degradation by bacterial solids. (AM)
Descriptors: Industrial effluents; Wastewater treatment; Heavy metals; Toxic materials; Pollution control; Zinc; Copper ; Lead; Chromium; Nickel; Cadmium
Identifiers: pretreatment

81-01709
Chromatographic behavior of humic materials extracted from Barberton sludge.
Manos, G. P.; Tsai, E.
Univ. of Akron, 302 E. Buchtel Ave., Akron, OH 44325
Water, Air, and Soil Pollution; an International Journal of Environmental Pollution 13(3), 373-377, Coden: WAPLAC Publ.Yr Sep 1980
illus. refs.
Abs.
Languages: ENGLISH
Doc Type: JOURNAL PAPER
TREATMENT CODES: I .(INVESTIGATIVE/OBSERVATION)
Humic and fulvic acids extracted from alkali treated municipal sludge contain more higher molecular weight materials than from secondary wastewater effluents. This suggests that higher molecular weight materials (>30,000) are more easily entrapped on the proteinaceous surface of the biomass. About 28% of the sludge COD is humic material. The humic acid fraction is of a higher molecular weight than the fulvic acid fraction. The value of the E4:E6 ratio indicates that humic materials of raw sludges are of recent origin. While the higher molecular weight humic materials (>30,000) would be easily adsorbed on the soil structure, the lower molecular weight material may have a higher mobility in the transport of heavy metals when the sludge is applied to soils. (AM.FT)
Descriptors: Acids; Alkalies; Sludges; Chromatography; Biomass; COD; Wastewater treatment; Sewage treatment; Organic wastes; Effluents; Municipal wastewaters; Heavy metals
Identifiers: humic acid; fulvic acid; high molecular weight materials

81-01703
Further studies on the influence of zeolite type A on metal transfer in the activated sludge process.
Perry, R.; Obeng, L. A.; Lester, J. N.
Univ. of London, Imperial College, Civil Eng. Dept., Public Health and Water Resource Eng. Section, London SW7 2BU, England
Environment International 3(3), 225-230, Coden: ENVIDV Publ.Yr: 1980
illus. refs.
Sum.
Languages: ENGLISH
Doc Type: JOURNAL PAPER
TREATMENT CODES: I .(INVESTIGATIVE/OBSERVATION)
The effect of zeolite type A on metal (Cd, Cr, Cu, Ni, Pb, Zn) removal by activated sludge was investigated using laboratory activated sludge simulations operated at constant aerator sludge age and settler surface loading. Different concentrations of raw zeolite and zeolite extracted from washing powder (0, 15, 30, 60, 120 mg/L) were introduced into the simulations. The zeolite was added at 2 degrees of Ca exchanged for Na, 25% and 75% of the maximum exchange capacity. Metals were added at concentrations typical of mixed domestic-industrial wastewaters. Apparently zeolite does not adversely affect metal removal at the concentrations and under the conditions used, but could slightly improve removal of Pb and, to a lesser extent, Zn and Cd. The greatest improvement occurred on the initial addition of zeolite; however, the improvement is not as great as that observed under conditions in the presence of detergent PO4-3. (MS.FT)
Descriptors: Heavy metals; Activated sludge process; Simulation; Detergents; Lead; Zinc; Cadmium; Chromium; Copper; Nickel; Surfactants; Sewage treatment; Wastewater treatment; Pollutant removal; Phosphate removal
Identifiers: zeolite; metal removal; 6 heavy metals

81-01409
Effluent rules are here for inorganic chemicals.
Shaw, J. S.
World News, Washington, DC
Chemical Engineering 87(18), 53-55, Coden: CHEEA3
Publ.Yr: Sep 8, 1980
illus no refs.
No abs.
Languages: ENGLISH
Doc Type: JOURNAL PAPER
EPA's new guidelines for inorganic chemicals apply to pollutants in the wastewaters of 152 out of 750 US inorganic chemical plants, but only 107 will have to make changes to conform, at an estimated cost of $41.2 million. Segments of the industry most seriously affected are titanium dioxide and chromium pigment producers. The crux of the EPA effort is the determination of ''best available technology'' (BAT), and the requirement that this standard be incorporated into industrial-wastewater permits. Compliance with BAT is mandated by July 1984. The guidelines are expressed numerically, and any suitable technology can be used which ensures compliance. The guidelines also propose slightly revised ''best practicable technology'' (BPT) standards. EPA also established somewhat more stringent standards than BAT for firms which discharge into municipal sewage treatment plants and set standards for new plants. In most cases, BAT translates into BPT plus additional end-of-pipe treatment. EPA is still considering other options for the final rules and is seeking information about the costs of complying with RCRA to determine the effect these will have on the total cost of meeting the various wastewater regulations. (FT)
Descriptors: EPA; Federal regulations; Chemical industry wastes; Inorganic compounds; Wastewaters; Titanium compounds; Chromium compounds; Pigments; Effluents
Identifiers: best available technology; best practicable technology

81-00759
Utilization of waste tin cans in the control of chromium plating wastes.
Ouano, E. A. R ; Arellano, F.
Quezon City, Philippines
Second recycling world congress· New and better uses of secondary resources Manila, Philippines Mar 19-22, 1979
National Science Development Board of the Philippines~Asian Recycling Association-Bureau International de la Recuperation~United Kingdom Society of Chemical Industry~United Kingdom ''Conservation & Recycling''~United Kingdom Institution of Metallurgists~Illinois Institute of Technology~United States Research Institute~United Kingdom Institution of Production Engineers~Clean Japan Center~Japan Waste Management Association~United States Bureau of Mines
CONSERVATION & RECYCLING 3(3-4), 355-359, Coden: CRECD2 Publ.Yr. 1979
illus. 5 refs
No abs.
Languages: ENGLISH
Doc Type: JOURNAL PAPER CONFERENCE PAPER
Rusting is an oxidation process that converts Fe from its elemental state to Fe+2 or Fe+3. During oxidation, Fe has potential for reducing substances from their higher oxidation states, e.g., Cr+6. Thus, if the chromic acid solution is passed through a stock of rusting tin cans it will oxidize the Sn and Fe to Sn+2 and Fe+2 oxidation states, and at the same time, the Cr+6 is reduced to Cr+3. The advantages of the procedure over the standard method of SO3-2 or SO2 reduction are listed. A bench-scale model was constructed using various sizes of tin can and different wastewater feeding characteristics to evaluate the effectiveness of the process. The more heavily rusted tin cans are more effective in reducing Cr+6. Generally, a retention time of 12 hr is required to reduce 90% of the Cr+6 to Cr+3, but for purposes of design, a 24-hr retention time is ideal to reduce Cr+6 almost to negligible level. Calcium carbonate is used as a precipitating agent. The chemical cost of conventional Cr treatment processes is twice that of the new process using rusted tin cans based on a 100 m3/d of combined wastewater with 5 ppm SO2 and pH 3.0. (FT)
Descriptors: Waste reuse; Waste management; Materials recovery; Tin; Chromium; Metal finishing industry wastes; Waste treatment; Pollution control; Chemical oxidation; Kinetics; Economics
Identifiers: rusted tin cans; Cr plating wastes

81-00665
Wastewater treatment plant works overtime.
Fritch, G. H.
Howard R. Green Co , Green Engineering Bldg., Cedar Rapids, IA 52401
Water and Wastes Engineering 17(9), 70-73, Coden: WWAEA2 Publ.Yr: Sep 1980
illus. no refs.
No abs.
Languages: ENGLISH
Doc Type: JOURNAL PAPER
The Amana, Iowa, wastewater treatment plant, operated and maintained by Amana Refrigeration, Inc. (which contributes >80% of the design loading), is described. The plant's industrial wastes-containing a high concentration of heavy metals-and its domestic wastes are segregated, with the latter transported through gravity collector sewers to a pumping station where it is ground before being sent to a flow equalization tank. A concrete splitter box divides the flow equally to 2 aeration basins. Aerobic digestion is accomplished using a center flow mounted mixing system; treated effluent is disinfected by chlorination. The system has a hydraulic capacity of 300,000 gpd and an organic capacity of 510 lb of BOD5/d. The segregated waste streams are pretreated separately. An unusual filtering system then removes metal hydroxides without prior clarification. The waste streams are segregated into 2 categories-Cr+6 wastes and acid-alkali wastes. Hexavalent chromium is reduced to Cr+3 with sodium bisulfite under acidic conditions, blended with the acid-alkali waste, and neutralized to precipitate insoluble metal hydroxides. Ferrous sulfate agglomerates the gelatinous waste, which is filtered through PVC filter tubes. (FT)
Descriptors Wastewater treatment plants; Industrial wastes; Aerobic process; Iowa; Engineering; Biological treatment; Heavy metals; Domestic wastes; Wastewater treatment
Identifiers: Middle Amana; Amana Refrigeration, Inc.,

81-00615
Aerobic sewage treatment system performance tested at Penn State.
Anonymous
WATER POLLUTION CONTROL ASSOCIATION OF PENNSYLVANIA. MAGAZINE 13(4), 16-18, Publ.Yr: Jul-Aug 1980
illus. no refs.
No abs.
Languages: ENGLISH
Doc Type: JOURNAL PAPER
Two aerobic treatment units, CA-5 and CA-15, manufactured by the Cromaglass Corporation have undergone 6 mo of tests at the Pennsylvania State University Wastewater Treatment Plant and have been approved by the Pennsylvania Department of Environmental Resources. The CA-5 is a 500-gpd model suitable for single family dwellings that can remove 82% BOD and 84% of the SS from incoming wastes. The batch processing system offered by the Cromaglass units reduces the loading on the drain field, which in turn reduces the required size of the field. The units are also designed to keep untreated sewage from entering the drain field. (FT)
Descriptors: Aerobic process; Sewage treatment; Aerobic systems; Domestic wastes
Identifiers: Pennsylvania State Univ.; CA-15 and CA-5 aerobic treatment units; Chromaglass Corp.

81-00599
Electrolytic ferrite formation system for heavy metal removal.
Nojiri, N.; Tanaka, N.; Sato, K.; Sakai, Y.
Mitsubishi Petrochemical Co., Ltd., Central Research Lab., Ami-cho, Ibaraki-ken, Japan
Water Pollution Control Federation. Journal 52(7), 1898-1906, Coden: JWPFA5 Publ.Yr: Jul 1980
illus. 3 refs.
Eng., Fr., Ger., Port., Span. abs.
Languages: ENGLISH
Doc Type: JOURNAL PAPER
An electrolytic coagulation process was developed for removal of heavy metals from industrial wastewaters. The process consists of the following processes: an electro-bath, in which Cr+6 is reduced to Cr+3; polymer coagulation and settling; and formation of ferrite in the settled sludge. Ferrite sludge is separated in a magnetic separator. The Cr in ferrite sludge is not soluble in water. Phosphate and silicon dioxide also are incorporated into the ferrite sludge. Supernatant water from the settling contains very little Cr. (AM)
Descriptors: Electrochemistry; Heavy metals; Materials recovery; Contaminant removal; Wastewater treatment; Ions; Engineering; Mathematical analysis; Industrial effluents; Separation processes; Chromium
Identifiers: electrolytic ferrite formation

81-00575
Collection and analysis of purgeable organics emitted from wastewater treatment plants.
Pellizzari, E. D.; Little, L.
Research Triangle Inst., Research Triangle Park, NC 27709
U.S. ENVIRONMENTAL PROTECTION AGENCY. OFFICE OF RESEARCH AND DEVELOPMENT. ENVIRONMENTAL PROTECTION TECHNOLOGY SERIES Coden: EPTSBT Publ.Yr: Mar 1980
illus. 15 refs.
Abs.
Languages: ENGLISH
An analytical method was developed for the analysis of volatile priority pollutants in airstreams passing through wastewaters using a Tenax GC cartridge in combination with GC-MS/computer. A sampling system was designed and field tested for sampling airstreams passing through grit chambers and activated sludge systems. Recovery of the volatile priority pollutants was accomplished by thermal desorption, purging with He into a liquid-nitrogen-cooled NI capillary trap, and introducing the vapors onto a GC column. Characterization and quantification of the priority pollutants was by MS using mass fragmentography. The areas of investigation were as follows: the performance of a Tenax GC sampling cartridge for the priority pollutants occurring in the airstreams passing through wastewaters; the design, fabrication and evaluation of a field sampler; recovery studies of priority pollutants from distilled water, raw wastewater, and activated sludge using laboratory-simulated conditions; a methods-of-addition study for priority pollutants in raw wastewater and activated sludge; the delineation of the GC/MS/COMP operating parameters for priority pollutants collected on Tenax GC cartridges; the application of the developed methods to the analysis of priority pollutants; and evaluation of the accuracy and precision of the collection methods for ''purgeable'' priority pollutants in airstreams from raw wastewater and activated sludge basins. (AM)
Descriptors: Wastewater treatment plants; Engineering; Air sampling; Activated sludge; Pollutant detection; Organic compounds; Chemical analysis; Wastewaters; Gas chromatography; Mass spectroscopy; Computer programs; Aromatic compounds; Halogenated compounds
Identifiers: purgeable organics

81-00564
Selected organic pesticides, occurrence, transformation, and removal from domestic wastewater.
Saleh, F. Y.; Lee, G. F.; Wolf, H. W.
North Texas State Univ , Denton, TX 76203
WATER POLLUTION CONTROL FEDERATION. JOURNAL 52(1), 19-28, Coden JWPFA5 Publ.Yr: Jan 1980
illus. 16 refs.
Eng., Fr., Ger., Port., Span. abs
Languages: ENGLISH
Doc Type JOURNAL PAPER
A study was conducted on the characterization of chlorinated organic pesticides in Dallas, Texas, municipal wastewater. The effects of biological wastewater treatment processes on these compounds were also studied using a 3,785-m3/d nominal capacity pilot plant with 2 activated sludge units. Wastewater from different stages of treatment from a 204-m3/d overloaded high-rate trickling filter treatment plant was used as feed to the activated sludge units. Analytical methods included electron capture GC on several columns of different polarity and chemical derivatization. Confirmatory tests, e.g., TLC, extraction of p-value, and central processing unit-MS/GC, were used to confirm the compounds detected by electron capture GC. Electron capture chromatograms of wastewater showed characteristic fingerprints, consisting of 20-25 peaks, which were constantly detected over a 2-yr period. Thirteen compounds were confirmed. (AM)
Descriptors: Municipal wastewaters; Insecticides; Herbicides ; Organochlorine compounds; Chlorophenoxyacetic acids; 2,4-D; Diazinon; Organophosphorus compounds; Aldrin; DDE; DDT; Pollutant detection; Pollutant removal; Wastewater treatment; Texas; Biological treatment; Activated sludge process
Identifiers: Dallas; heptachlor epoxide; 13 pesticides

81-00510
Cooling-water treatment prevents excessive deposits.
Anonymous
CHEMICAL ENGINEERING 87(16), 91, Coden: CHEEA3 Publ.Yr: Aug 11, 1980
illus. no refs.
No abs.
Languages: ENGLISH
Doc Type: JOURNAL PAPER
Phosphate-based treatments are now replacing the chromate- or chromate/Zn-based cooling water additives used to protect against corrosion and deposition for the past 30 yr. A patented system-Dianodic II-involves the use of 2 additives injected successively into the cooling-water system. The first additive contains orthophosphate, polyphosphate and phosphonate compounds, and a Cu corrosion inhibitor, while the second contains an inhibitor/dispersant for calcium orthophosphate. The system improves corrosion protection without excessive deposition and allows greater changes in water chemistry without affecting the coating. Operating costs are 45% less than that of the conventional chromate treatment. (FT)
Descriptors: Cooling waters; Wastewater treatment; Corrosion ; Materials protection; Phosphates; Water pollutants

81-00508
Evaluation of reverse osmosis membranes for treatment of electroplating rinsewater.
McNulty, K. J.; Hoover, P. R.
Abcor, Inc., Walden Div., Wilmington, MA 01887
U.S. ENVIRONMENTAL PROTECTION AGENCY. OFFICE OF RESEARCH AND DEVELOPMENT. ENVIRONMENTAL PROTECTION TECHNOLOGY SERIES Coden: EPTSBT Publ.Yr: May 1980
illus. refs.
Abs. (Available from NTIS, Springfield, VA 22161)
Languages: ENGLISH
The RO system described functions by concentrating the chemicals for return to the processing bath while purifying the wastewater for reuse in the rinsing operation. The effectiveness of the PA-300, PBIL, NS-100, NS-200, SPPO, B-9, and CA membranes were evaluated in tests on rinsewater with extreme pH and oxidant levels. The PA-300 membrane performed well with copper cyanide, zinc cyanide, and chromic acid rinsewaters, while the NS-200 and PBIL membranes performed best with acid Cu rinsewaters. After commercializing the membranes, applications in various metal finishing, non-ferrous metal, steel, and inorganic industries may be found. (FP.AM)
Descriptors: Reverse osmosis; Membranes; Wastewater treatment; Metal finishing industry wastes; Waste treatment
Identifiers: electroplating rinsewater

80-08412
Management & control of heavy metals in the environment.
Anonymous
International conference: Management & control of heavy metals in the environment London, England Sep 18-21, 1979
Commission of the European Communities-Institution of Water Engineers & Scientists-Institution of Public Health Engineers-Institute of Water Pollution Control-World Health Organisation
664 pp Publ.Yr: 1979
Publ: Edinburgh, Scotland CEP Consultants
illus. index refs. for various papers
Abs.
Languages: ENGLISH
Doc Type: BOOK CONFERENCE PROCEEDINGS
Problems associated with management and control of heavy metal-bearing wastes in marine, freshwater, and terrestrial environments are discussed. Topics include health effects, sources and pathways, analytical techniques, metal speciation, sludge treatment and disposal via land application, industrial sources, and waste management. The following metals are considered: Cd, Pb, Zn, Hg, Se, Ag, As, V, Be, Co, Cr, Ni, Sb, Fe, Al, and Cu. (FP.FT)
Descriptors: Heavy metals; Waste disposal; Waste management; Marine environments; Freshwater environments; Terrestrial environments; Toxicology; Public health; Measuring methods; Sludge treatment; Sludge disposal; Land application; Wastewaters; Books; Aquatic organisms; Sediments; Air pollution; Conferences; Pollution control; Soils; Plants; Chromium; Nickel; Antimony; Iron; Aluminum; Copper; Mercury; Selenium; Silver; Arsenic; Vanadium; Beryllium; Mining; Industrial wastes; Cadmium; Lead; Zinc; Cobalt
Identifiers: 16 metals; proceedings; metal speciation

80-07570
Studies on the use of inorganic gels in the removal of heavy metals.
Srivastava, S. K.; Bhattacharjee, G.; Sharma, A. K.; Oberoi, C K.
Univ. of Roorkee, Chemistry Dept., Roorkee, U.P., India
WATER RESEARCH 14(2), 113-115, Coden: WATRAG Publ.Yr: 1980
illus. refs.
Abs.
Languages: ENGLISH
Doc Type: JOURNAL PAPER
Chromium ferrocyanide gel shows a great affinity for Ag^+, Cu^{+2}, Tl^+, Zn^{+2}, CO^{+2}, Cd^{+2}, Mn^{+2}, and Fe^{+3} and has been used to separate and recover some heavy metal ions, e.g., Tl^+, Hg^{+2}, Mg^{+2}, and Fe^{+3}. Some of these can be completely eluted from the columns of this exchanger material, and the compound can be used to treat wastewater rich in heavy metal ions. The only drawback of this material is the partial recovery of a few metal ions, e.g., Co^{+2}, Cd^{+2}, Mn^{+2}, Zn^{+2}, and Pb^{+2} and the irreversible uptake of Cu^{+2} and Ag^+. (AM.FT)
Descriptors: Inorganic compounds; Ion exchange; Ions; Heavy metals; Wastewater treatment; Silver; Copper; Thallium; Zinc; Cobalt; Cadmium; Manganese; Iron; Mercury; Magnesium; Contaminant removal
Identifiers: chromium ferrocyanide gel; distribution coefficients

80-07551

Activated carbon process for treatment of wastewaters containing hexavalent chromium.

Huang, C P.; Bowers, A. R
Univ. of Delaware, Newark, DE 19711

U.S. ENVIRONMENTAL PROTECTION AGENCY. OFFICE OF RESEARCH AND DEVELOPMENT. ENVIRONMENTAL PROTECTION TECHNOLOGY SERIES Coden. EPTSBT Publ.Yr: Jul 1979
illus refs.
Abs (Available from NTIS, 6285 Port Royal Rd., Springfield, VA 22161)
Languages: ENGLISH
Doc Type: REPORT

The removal of Cr+6 from dilute aqueous solution by an activated carbon process was investigated. Two removal mechanisms were observed- Cr+6 species were removed by adsorption onto the interior C surface and/or through reduction to the trivalent state at the external C surface. The effects of Cr+6 concentrations, pH, C dosage, and extent of mixing in the reaction vessel were studied in the batch mode and in continuous flow packed column experiments in the laboratory. The adsorptive capacity of the C and the rates of Cr+6 adsorption and reduction were determined. Thermal regeneration of the exhausted C was examined, along with caustic or acid stripping solutions and a combined caustic-thermal process. A case study is presented and the experimental data and rate expressions obtained from the data are used to evaluate the design variables (pH, carbon dose, Cr+6 concentration, and mixing in the reaction vessel). Several Cr+6 treatment schemes are proposed, together with an economic analysis of each scheme. (AM)

Descriptors: Wastewater treatment; Activated carbon; Chromium; Heavy metals; Adsorption; Kinetics; Mathematical analysis; Contaminant removal; Reduction; Economics
Identifiers: hexavalent Cr

80-07525

Examination of the applicability of cellulose ion exchangers for water and waste water treatment.

Joergensen, S. E.
Royal Danish School of Pharmacy, Dept. of Chemistry AD, 2 Universitetsparken, DK-2100 Copenhagen Oe, Denmark

WATER RESEARCH 13(12), 1239-1247, Coden: WATRAG Publ.Yr 1979
illus. refs.
Abs
Languages: ENGLISH
Doc Type: JOURNAL PAPER

Three cellulose ion exchangers were able to remove proteins, azodyes, DBS, humic acid, chromate, and heavy metal ions. The selectivity of the ion exchangers for removal of these compounds is very high, which explains their ability to remove the examined compounds with high efficiency and capacity, although the 3 cellulose ion exchangers have only a small capacity expressed as equivalents per liter. The mass transfer coefficient was determined; only the internal mass transfer determines the uptake rate Theoretical column calculations based upon the found mass transfer coefficients were confirmed by pilot plant experiments (AM)

Descriptors: Ion exchange; Wastewater treatment; Water treatment; Laboratory testing; Resins; Mathematical analysis; Pilot plants; Feasibility studies
Identifiers: cellulose ion exchangers; mass transfer coefficient

80-07510

Processing chrome tannery effluent to meet best available treatment standards.

Barber, L. K.; Ramirez, E. R.; Zemaitis, W. L.
A. C. Lawrence Leather Co., Inc., 1 Bridge St., Winchester, NH 03470

U.S. ENVIRONMENTAL PROTECTION AGENCY. OFFICE OF RESEARCH AND DEVELOPMENT. ENVIRONMENTAL PROTECTION TECHNOLOGY SERIES Coden: EPTSBT Publ.Yr: Jul 1979
illus. refs.
Abs. (Available from NTIS, 5285 Port Royal Rd., Springfield, VA 22161)
Languages: ENGLISH
Doc Type: REPORT

To satisfy stream discharge requirements at its Winchester, New Hampshire, chrome tan shearling tannery, the A. C. Lawrence Leather Co., Inc. selected primary and secondary systems that are unique as applied to tannery effluent treatment in the US. Primary clarification is accomplished by means of coagulation and flotation, using electrolytic and mechanical micro-bubble generation. The secondary biological section is a CARROUSEL,TM a technical modification of the Passveer oxidation ditch. During the 12-mo study, complete analytical data representing winter and summer operating conditions were acquired along with operating cost data. The following parameters were analyzed. BOD5; SS; N; NH3; Cr; sludge volume; and fats, oils, and grease levels. These data are presented and the design and operation of the system is described. Possible applications of these principles to other tannery wastewaters are suggested. (AM.FT)

Descriptors: Tanning industry wastes; Wastewater treatment; Water quality standards; Primary treatment; BOD; Secondary treatment; Coagulation; Oxidation; Oils; Suspended solids; Nitrogen; Ammonia; Chromium; Sludges
Identifiers: best available treatment; A. C. Lawrence Leather Co., Inc.

80-07458

Movement of heavy metals into a shallow aquifer by leakage from sewage oxidation ponds.

Nissenbaum, A.; Wolfberg, A.; Kahanovich, Y.; Avron, M.
Weizmann Inst. of Science, Isotope Dept., Rhovot, Israel

WATER RESEARCH 14(6), 675-679, Coden: WATRAG
Publ.Yr: 1980
illus. refs
Abs.
Languages. ENGLISH
Doc Type· JOURNAL PAPER

The concentrations of Mn, Ni, Cu, Cd, and Cr were measured in a shallow perched groundwater aquifer which underlies the Dan Region Sewage Reclamation Project (Israel). The contribution of effluents to the groundwaters has been evaluated on the basis of Cl- concentration. Groundwater containing >60% effluents showed a 100-fold decrease in Cu and Mn 650 m away from the ponds, as compared with the near ponds samples. Nickel and Cd showed only a small decrease in concentration over 150 m, and then stayed constant. The concentrations of Cu and particularly of Mn in the groundwaters near the oxidation ponds is equivalent to or greater than in the ponds themselves. Copper and Mn are mobilized from the precipitated sludge into the interstitial waters. They percolate into the groundwater near the ponds and then are precipitated by increasing aeration during the movement of the water away from the pond area. Cadmium and Ni form stable soluble organic chelates which are only slightly removed by interaction with the sandy soil of the aquifer. (AM)

Descriptors: Groundwater; Aquifers; Israel; Effluents; Heavy metals; Wastewater treatment plants; Sewage; Lagoons; Activated sludge process; Manganese; Nickel; Copper; Cadmium; Chromium; Chlorine compounds
Identifiers: Dan Region Sewage Reclamation Project

80-06270

The analysis and fate of odorous sulfur compounds in wastewaters.

Jenkins, R. L.; Gute, J. P.; Krasner, S. W.; Baird, R. B.
County Sanitation Districts of Los Angeles County, San Jose Creek Water Quality Lab., 1965 S Workman Mill Rd., Whittier, CA 90601

WATER RESEARCH 14(5), 441-448, Coden: WATRAG
Publ Yr: 1980
illus. refs.
Abs.
Languages· ENGLISH
Doc Type: JOURNAL PAPER

GC coupled with the S-specific flame photometric detector was used as the basis for developing an analytical system with sensitivity in the ppb (mL odorant/mL air) range for organosulfur compounds. A high vacuum line for storage and handling of standard compounds, and the use of gas syringes are integral features of the calibration system. Sampling equipment was constructed and tested which allows the analysis of gaseous organosulfur compounds in wastewaters, sewer gases, and ambient air. Gaseous mixtures keep better than aqueous solutions with respect to microbiological, chemical, or physical losses. The analytical system was employed to trace and characterize an odor incident from a municipal treatment plant to the industrial discharger causing the problem. Certain long-chain mercaptans which are not normally odorous can decompose in aeration treatment facilities to produce low molecular weight mercaptans which then cause an odorous condition. (AM)

Descriptors: Odors; Sulfur compounds; Wastewaters; Pollutant analysis; Gases; Organic compounds; Laboratory methods; Organosulfur compounds; Gas chromatography
Identifiers: flame photometric detector

80-06231

A practical approach to wastewater treatment for the metal finishing industry.

Olthof, M.
Duncan, Lagnese and Assoc., Inc., 3185 Babcock Blvd., Pittsburgh, PA 15237

WATER POLLUTION CONTROL ASSOCIATION OF PENNSYLVANIA. MAGAZINE 12(6), 18-27, Publ.Yr: Nov-Dec 1979
illus. no refs.
No abs.
Languages: ENGLISH
Doc Type: JOURNAL PAPER

General guidelines for the development of a pollution control program for a metal finishing plant are provided. In-plant considerations for the design of a treatment system include water flow reduction, optimizing the dilution ratio, counterflow rinsing, cascade rinsing, segregation, process solutions, floor spillage, and dragout reduction. Practical treatment methods include hexavalent chromium treatment, cyanide treatment, and general rinse water treatment. Reference is made to promising new technologies and their potential application. The chemistry outlined forms the basis for the design of wastewater treatment facilities. A typical flow schematic for a metal finishing plant is presented. Miscellaneous treatment approaches include integrated system, ion exchange, and RO. The potential for recovery of one of the plating solutions should be evaluated during the planning stage for pollution control facilities; Ni, Cr, Cu, and Zn plating baths are possibilities. (FT)

Descriptors: Metal industry wastes; Wastewater treatment; Pollution control; Engineering; Ion exchange; Reverse osmosis; Chromium; Cyanides
Identifiers. metal finishing industry; hexavalent Cr treatment; cyanide treatment; general rinse water treatment

80-06157
Treatment of dilute metal effluents in an electrolytic precipitator.
Bryson, A. W ; Dardis, K. A.
Univ. of the Witwatersrand, Dept. of Chemical Eng., Jan Smuts Ave , Johannesburg 2001, South Africa
WATER S. A 6(2), 85-87, Coden: WASADV Publ.Yr: Apr 1980
illus. refs.
Abs
Languages: ENGLISH
Doc Type: JOURNAL PAPER
Excessive concentrations of metals in industrial effluents may adversely affect the performance of sewage purification works Although there is existing technology for treating these effluents, it has not found wide application due to costly equipment and chemicals and the absence of sufficient space on most plants. The feasibility of removing these metals from dilute solutions by electrolytic precipitation using a particulate electrode is investigated. A test plant was constructed which was compact, did not require the addition of chemicals and could be operated by unskilled personnel. The plant was installed at an electroplating works on the Witwatersrand and was successful in treating wash waters containing Cu, Ni, Cr, and Zn. (AM)
Descriptors: Heavy metals; Electric collectors; Industrial effluents; Wastewater treatment; Nickel; Nickel; Chromium; Copper; Zinc; Engineering; South Africa; Sewage treatment; Feasibility studies
Identifiers: Johannesburg; electrolytic precipitator

80-04555
Effects of treated effluent on a natural marsh.
Murdoch, A.; Capobianco, J. A.
Canada Centre for Inland Waters, Process Research Div., Geology Section, P.O. Box 5050, Burlington, Ontario L7R 4A6, Canada
WATER POLLUTION CONTROL FEDERATION. JOURNAL 51(9), 2243-2256, Coden: JWPFA5 Publ.Yr: Sep 1979
illus. refs.
Eng., Fr , Ger., Port., Span. abs.
Languages: ENGLISH
Doc Type: JOURNAL PAPER
Long-term effects of poor-quality wastewater treatment plant effluent on a natural marsh on the western shore of Lake Ontario were studied. The major contributor of N and P to the marsh area was the treatment plant discharge. Metal concentrations in the water were generally low (<1X10-3-90X10-3 mg/L). Increased concentrations of Pb, Cr, Zn, N, P, and organic C (<=300 mug/g, 90 mug/g, 210 mug/g, 2.34%, 1.10%, and 0.87% of sediment dry weight, respectively) were found in the sediment vertical profile obtained from the marsh area. The shoot standing crop of the dominant plant species (Glyceria grandis) was associated with amounts of P, N, and organic C in the sediments. (AM)
Descriptors: Wastewater discharges; Wetlands; Lake Ontario; Nitrogen; Phosphorus; Lead; Chromium; Zinc; Carbon; Sediments; Plants; Environmental impact; Nutrients
Identifiers: Glyceria grandis

80-03410
(Biological purification of wastewater in the presence of chemically bonded oxygen).
Karyukhina, T. A.; Ksenofontov, V. A.
Kuibysheva Moscow Eng. Construction Inst., USSR
VODOSNABZHENIE I SANITARNAIA TEKHNIKA No. 3, 9-11, Coden: VSTEAO Publ.Yr: 1979
illus refs.
abs.
Languages: ENGLISH
Doc Type: JOURNAL PAPER
Thermodynamic equations were developed for comparative assessment of the theoretical possibility of various biochemical processes for use in wastewater purification. Biochemical reduction of O-containing anions of Group III-VII elements in the periodic table under anaerobic conditions was accompanied by decreases in the concentration of organic pollutants, dissociation of anions, and the partial demineralization of wastes. The calculations showed the possibility of biochemical reduction of chromates and bichromates, sulfates, nitrates, carbonates, selenates, tellurates, tungstenates, and vanadates. For the first time, iodates and bromates were reduced experimentally; the rate of reduction of bromates was 3 mg O/g/hr of ash-free sludge while that for iodates was 2.8 mg/g/hr. (AM.FT)
Descriptors: Wastewater treatment; Oxygen compounds; Anions; Biological oxidation; Chemical treatment; Mathematical analysis
Identifiers: anion reduction; chromates; bichromates; nitrates; carbonates; selenates; tellurates; tungstentes; vanadates

80-03296
Analysis of selected trace organics in advanced wastewater treatment systems.
Baird, R.; Selna, M.; Haskins, J.; Chappelle, D.
Los Angeles County Sanitation Districts, San Jose Creek Water Quality Lab., 1965 S. Workman Mill Rd., Whittier, CA 90601
WATER RESEARCH 13(6), 493-502, Coden: WATRAG Publ.Yr: 1979
illus. refs.
Abs.
Languages: ENGLISH
Doc Type: JOURNAL PAPER
Effluents through 4 different pilot tertiary wastewater treatment systems were monitored for selected trace organic compounds. The effects of using O3, and free and combined Cl residuals in these systems were studied. Advanced treatment of secondary effluent using various combinations of flocculation (alum and polymer), dual media filtration, and carbon adsorption were evaluated for production or removal of volatile halogenated organics, PAHs, chlorinated pesticides, and PCBs. GC methods were used; specific techniques and analytical parameters are described. Salient results included drastic increases in trihalomethane production using free Cl residuals: no significant levels of trihalomethanes with disinfection using combined Cl species: =90% reduction in trihalomethane levels by carbon adsorption; absence of detectable quantities of PAHs; and significant decreases in pesticide and PCB levels by carbon adsorption and chlorination. Statistical dependence of trihalomethane production on soluble COD, SS, and chloramine levels was evident from multiple linear regression calculations. (AM)
Descriptors. Chemical analysis; Wastewaters; Organic compounds; Gas chromatography; Wastewater treatment; Disinfectants; Aromatic compounds; PCB compounds; Pesticides
Identifiers: trihalomethanes

80-03204
Trace organics removal by advanced waste treatment.
Reinhard, M.; Dolce, C. J.; McCarty, P. L.; Argo, D. G.
Stanford Univ., Dept. of Civil Eng., Stanford, CA 94305
91st annual meeting of the AOAC: Symposium on environmental contamination by industrial organic chemicals Washington, DC Oct 1977
AMERICAN SOCIETY OF CIVIL ENGINEERS. ENVIRONMENTAL ENGINEERING DIVISION. JOURNAL 105(EE4), 675-693, Coden: JEEGAV Publ.Yr: Aug 1979
illus. refs.
Abs.
Languages ENGLISH
Doc Type: JOURNAL PAPER CONFERENCE PAPER
The performance of an advanced waste treatment plant, Water Factory 21, in Orange County, California, was investigated with respect to organics removal. The processes for treating trickling-filter effluent were lime treatment for SS and heavy-metal removal, NH3 stripping and breakpoint chlorination for N removal, recarbonation and filtration, activated-carbon adsorption for organics removal, RO for demineralization, and final chlorination for disinfection. The COD and a broad range of volatile and gas chromatographable substances were measured in the plant influent and effluent and in the effluents of individual processes. Lime treatment was effective in removing COD and PCBs, while NH3 stripping and activated-carbon contacting removed a broad range of volatile compounds. Chlorination led to the formation of a variety of halogenated compounds, mainly trihalomethanes. (AM)
Descriptors: Wastewater treatment plants; Water treatment; California; Organic compounds; Pollutant removal; COD; Heavy metals; Suspended solids
Identifiers. Water Factory 21; Orange Co.

80-01973
Textile plant wastewater toxicity.
Rawlings, G. D.; Samfield, M.
Monsanto Research Corp., Dayton, OH 45407
ENVIRONMENTAL SCIENCE & TECHNOLOGY 13(2), 160-164, Coden: ESTHAG Publ.Yr: Feb 1979
illus. refs.
ISSN: 0013-936X
No abs.
Languages: ENGLISH
Doc Type: JOURNAL PAPER
TREATMENT CODES: D .(DESCRIPTIVE) ; I .(INVESTIGATIVE/OBSERVATION)
The American Textile Manufacturers Institute (ATMI) and the EPA sponsored a study to gather enough technical and economic data to determine the best available technology economically achievable (BATEA) for reducing critera pollutants from textile wastewaters. Criteria pollutants from textile industry include BOD5, COD, color, sulfide, pH, Cr, phenol, and TSS. Two mobile pilot plants were constructed and used to evaluate treatments at 23 textile plants. Seven tertiary treatment modes for best available technology evaluation were tested. Bioassays used were selected by EPA and included tests for assessment of health and ecological effects. Toxicity measures and rankings are discussed. Phase I of the test consisted of ranking textile plants for detailed toxicity of their secondary wastewater and selecting 10 plants for detailed toxicity evaluation in phase II. Those plants with relatively more toxic effluents were selected to study the reduction in toxicity by selected tertiary treatment wastewater control technologies. During Phase II of the project, samples will be collected at each plant before and after each of the tertiary treatment unit operations being tested in the pilot plant. (FT)
Descriptors: Textile industry wastes; Wastewater treatment plants; Water pollutants; BOD; COD; Chromium; Suspended solids ; Sulfur compounds; Tertiary treatment; Pilot plants; Bioassays; Toxicity
Identifiers: phenol; American Textile Manufacturers Institute; best available technology economically achievable

80-01928
Methods for neutralizing toxic electroplating rinsewater-part 3.
Marin, S.; Trattner, R. B.; Cheremisinoff, P. N.
New Jersey Inst. of Technology, Newark, NJ 07102
INDUSTRIAL WASTES 25(5), 22-23, Coden. INWABK Publ.Yr Sep-Oct 1979
refs.
ISSN: 0537-5525
No abs.
Languages: ENGLISH
Doc Type. JOURNAL PAPER
TREATMENT CODES: M .(METHODOLOGICAL) ; D .(DESCRIPTIVE)
In the removal of Cr from electroplating rinsewater, the treatment is intended to convert Cr+6 to Cr+3, and then to precipitate it as the insoluble hydroxide. The reduction is performed with sodium bisulfite (NaHSO3) at a pH of 2.0, with the precipitation occurring at pH 8.5, using caustic for the pH adjustment. A pH recorder-controller is used to measure the pH and add the NaHSO3 under automatic oxidation-reduction potential (ORP) control. When the ORP indicates a value of 300 mV, the chromates are reduced, and the addition is stopped. After 15 min of mixing, the pH is adjusted to 8.5, and after ≈15 min of additional stirring, the precipitated hydroxides are allowed to settle. In the removal of cyanide and alkali wastes, the cyanides are 1st converted to cyanates with a 15% solution of sodium hypochlorite (NaOCl) at a pH >10, and are then oxidized to N and CO2 with the NaOCl solution at pH 8.5. When the ORP reaches a range of 350-400 mV (indicating that all cyanides have been oxidized) the wastewater changes from a clear, transparent green to sky blue. Complete oxidation takes ≈10 min. The treated water is allowed to settle for ≈2 hr, during which time small amounts of metals, e.g., Cu and Ag, will be precipitated as insoluble hydroxides. (FT)
Descriptors: Industrial wastes; Wastewater treatment; Chromium; Cyanides; Precipitation; Chemical oxidation; Reduction; pH; Metals; Toxic materials
Identifiers: electroplating rinsewaters; automated control; sodium bisulfite; sodium hypochlorite; hydroxides

80-01891
IBM Owego give metal finishing wastes total treatment.
Forbes, J. M.
IBM, Owego, NY 13126
POLLUTION ENGINEERING 11(3), 46-49, Coden: PLENBW
Publ.Yr. Mar 1979
Illus. no refs.
ISSN: 0032-3640
No abs.
Languages: ENGLISH
Doc Type: JOURNAL PAPER
TREATMENT CODES: A (APPLICATIONS) ; N .(NEW DEVELOPMENTS)
IBM's Federal Systems Division facility at Owego, New York, has various plating and metal finishing operations including copper plating, cleaning, surface treatment, and etching, with associated rinses that generate =500,000 gpd of wastewater. At the main facility there are 3 prime industrial drain systems, a general rinse drain for nonchrome, noncyanide rinse waters, an acid-alkali drain for intermittent small volume batch dumps of acids and alkali cleaners, and a chrome drain to receive chrome waste rinse waters. The chrome and acid-alkali wastes are pretreated before entering the general rinse system. The general rinse system alone handles the bulk of the wastes and begins with the collection and equalization of wastes in a 500,000-gal lined lagoon. After passing through a settling and skimming tank, the general rinse passes *through a demineralizer-neutralization tank to two 500-gpm* clarifiers for removal of the metallic hydroxides and SS by the filtering action of a sludge blanket. Results from the past 2 yr have shown very successful system operation, with effluent standards well within EPA limits. (FT)
Descriptors: Wastewater treatment; Wastewater treatment plants; Engineering; New York; Pollutant removal; Metal finishing industry wastes
Identifiers. IBM's Federal Systems Division; Owego

80-01866
Methods for neutralizing toxic electroplating rinsewater-part 1.
Marin, S.; Trattner, R. B.; Cheremisinoff, P. N.; Perna, A. J
New Jersey Inst. of Technology, Newark, NJ 07102
INDUSTRIAL WASTES 25(3), 50-52, Coden. INWABK
Publ.Yr. May-Jun 1979
Illus. no refs.
ISSN: 0537-5525
No abs.
Languages: ENGLISH
Doc Type: JOURNAL PAPER
TREATMENT CODES: M .(METHODOLOGICAL) ; A .(APPLICATIONS) ; D .(DESCRIPTIVE)
Rinsewaters from the electroplating process contain high concentrations of cyanides and chromates. To comply with US EPA discharge standards several chemical processes have been developed to destroy the cyanides and chromates. for cyanide the most common form of treatment is alkaline chlorination oxidation by sodium hypochlorite or Cl2 plus sodium hydroxide addition to the waste. Electrolytic decomposition and ozonation are also effective treatments for cyanide wastes. Chromium waste treatment involves reduction and precipitation processes Reducing agents include ferrous sulfate, sodium bisulfate, and sulfur dioxide; neutralizing compounds include lime slurry or caustic. Batch treatment is necessary in shops *having a total daily flow <30,000 gpd, whereas continuous* treatment is recommended for volumes >30,000 gpd. (FT)
Descriptors: Metal finishing industry wastes; Cyanides; Chromium compounds; Wastewater treatment; Contaminant removal; Chemical oxidation; Neutralization; Reduction
Identifiers: electroplating

80-01412

The EPA-proposed granular activated carbon treatment requirement: Panacea or Pandora's box.

Pendygraft, G. W.; Schlegel, F E.; Huston, M. J.
Baker & Daniels

AMERICAN WATER WORKS ASSOCIATION. JOURNAL 71(2), 52-60, Coden: JAWWA5 Publ.Yr: Feb 1979
no refs.
ISSN: 0003-150X
No abs.
Languages: ENGLISH
Doc Type: JOURNAL PAPER
TREATMENT CODES: D .(DESCRIPTIVE) ; N .(NEW DEVELOPMENTS)

The feasibility of GAC treatment to accomplish the EPA's desired goal, a substantial reduction or removal of trace amounts of synthetic organic chemicals (SOCs) in public drinking supplies, is questioned. No water system in the world has used GAC treatment to satisfy the design criteria prescribed by the proposed regulation. Although the European GAC practice has been cited as support for the EPA-proposed GAC requirement, scrutiny demonstrates that river bank filtration or ground passage, not carbon treatment, is responsible for much of the organic removal in European waterworks. The use of GAC for taste and odor control has little, if any, bearing on its efficacy to control organics. The use of GAC in the food and beverage industry, pharmaceuticals, municipal, and industrial wastewater treatment is examined. Six alternatives to GAC are suggested. Additional research is needed to evaluate the chromatographic or desorption effects of GAC. GAC itself may be a source of harmful chemicals, its large surface area providing a site for many undesirable chemical reactions and an ideal location for bacterial growth that would subsequently be released into the final drinking water. The financial effects and energy consumption problems are examined. Engineers and cancer specialists overwhelmingly oppose the regulation. (FT)

Descriptors: Activated carbon; EPA; Water purification; Public concern; Feasibility studies; Federal regulations; Economics; Engineering; Organic wastes; Water treatment plants ; Public health

Identifiers: trihalomethanes; synthetic organic chemicals; granular activated carbon; health risks

79-06664

Residual heavy metal removal by an algae-intermittent sand filtration system.

Filip, D. S ; Peters, T.; Adams, V. D.; Middlebrooks, E. J.
Utah State Univ , Utah Water Research Lab., Logan, UT 84322

WATER RESEARCH 13(3), 305-313, Coden: WATRAG Publ.Yr. 1979
illus. refs.
Abs.
Languages: ENGLISH
Doc Type. JOURNAL PAPER

A laboratory scale study was undertaken to determine the feasibility of using algae growing in wastewater lagoons to absorb residual heavy metals for subsequent complete removal by intermittent sand filtration of the metal laden algae. In semicontinuous cultures the mixed algal flora native to wastewater lagoons absorbed 70%-90% of the Cd and Cu from the wastewater media. Chromium absorption was less by ratio (20% was absorbed), but the mass of Cr removed was much greater as high levels of Cr were added. Only 1 alga (Oscillatoria sp.) which was extremely resistant to Cr grew in the Cr exposed cultures. Nearly total removal of the Cd and Cu was achieved by the algae-intermittent sand filter system. The net Cr removal agreed with the accumulation analyses. (AM)

Descriptors: Heavy metals; Lagoons; Algae; Wastewater treatment; Filtration; Copper; Cadmium; Chromium; Feasibility studies; Contaminant removal

79-06658

Instrumental analysis in wastewater treatment.

McLean, D. A.; Phillips, S. L.
East Bay Municipal Utility District, P.O. Box 24055, Oakland, CA 94623

ANALYTICAL CHEMISTRY 50(14), 1361A-1376A, Coden: ANCHAM Publ.Yr: Dec. 1978
illus. refs.
No abs.
Languages: ENGLISH
Doc Type: JOURNAL PAPER

The development of wastewater treatment is reviewed, emphasizing the analytical methods used to monitor the treatment processes. Early methods of analysis were manual, i.e., gravimetric, titrimetric, and visual comparison, and rudimentary instrumentation. The advent of AAS and GC provided methods by which individual elements or compounds could be analyzed with high specificity and sensitivity. Heavy metals could be analyzed for at low concentrations in samples that contained high levels of interfering substances. Trace organic compounds were analyzed with developing GLC and gas-solid chromatography technology; the analysis of chlorinated pesticides and polychlorinated aromatics became possible with the development of thermal conductivity, flame ionization, electron capture, and alkali flame GC detectors. Instrumental methods which have been used the longest in monitoring wastewater treatment processes include pH, conductivity, oxidation-reduction potential, DO, turbidity, and Cl residual analysis (FT)

Descriptors: Wastewater treatment; Monitoring methods; Chemical analysis; Historical reviews

79-06647

Investigation of soluble organic nitrogen compounds in municipal secondary effluent.

Keller, J. V ; Leckie, J. O.; McCarty, P. L.
James M. Montgomery Consulting Engineers, Inc., 1990 N. California Blvd., Suite 444, Walnut Creek, CA 92707

WATER POLLUTION CONTROL FEDERATION. JOURNAL 50(11), 2522-2529, Coden: JWPFA5 Publ.Yr: Nov. 1978
illus. refs.
Eng., Fr., Ger., Port., Span. abs.
Languages: ENGLISH
Doc Type. JOURNAL PAPER

The ability of anion and cation exchange resins and granular activated carbon to remove soluble organic nitrogen and other soluble organics from filtered municipal activated sludge effluent was studied Ion exchange, particularly using cation exchange resins, could be used as an expensive polishing treatment to remove N50% of the soluble organic fraction remaining after adsorption with high dosages of activated carbon. Before and after activated carbon contacting of secondary effluent, more of the soluble organic nitrogen was positively charged, and more of the soluble COD was negatively charged. Sephadex column chromatography indicated that activated carbon contacting removed a significant fraction of the soluble organic nitrogen and soluble COD present in secondary effluent. (AM)

Descriptors: Resins; Ion exchange; Activated carbon; Wastewater treatment; Nitrogen; COD; Activated sludge process; Adsorption; Tertiary treatment
Identifiers: anion exchange resins; cation exchange resins

79-06623

Treatability evaluation of general organic matter. Matrix conception and its application for a regional water and waste water system.

Tambo, N.; Kamei, T.
Hokkaido Univ., Faculty of Engineering, Dept. of Sanitary Engineering, Sapporo, 060 Japan

WATER RESEARCH 12(11), 931-950, Coden: WATRAG Publ.Yr· 1978
illus. refs.
Abs.
Languages: ENGLISH
Doc Type: JOURNAL PAPER

Grouping of organic compounds in wastewater treatability evaluation can be performed by gel chromatography. Using Sephadex G-15 gel with 2-stage elution of distilled water and 0.1M ammonium hydroxide solution, general organic compounds in a regional water and wastewater system are characteristically grouped into 6 groups. The treatability of each group is characterized by the ratio of TOC:E 260 (UV absorbance at 260 nm). Only a portion of TOC, which is insensitive to UV absorbance at 260 nm, can effectively be removed by aerobic biological processes Small organic compounds are biologically decomposed readily until TOC:E 260 ratio of 40-50·1 is obtained Large organic compounds are effectively removed by coagulation with Al followed by sedimentation and sand filtration. For smaller organic compounds, coagulation is ineffective; activated carbon adsorption is effective for TOC: E260 ratios of N50. (MS)

Descriptors: Wastewater treatment; TOC; Ultraviolet radiation; Biological treatment; Physicochemical treatment; Engineering; Liquid chromatography; Organic compounds
Identifiers: treatability criteria; gel chromatography

79-05437

Direct analytical procedure for determination of volatile organic acids in raw municipal wastewater.

Narkis, N.; Henfeld-Furie, S.
Technion-Israel Inst. of Technology, Environmental Engineering Labs., Technion City, Haifa, Israel

WATER RESEARCH 12(7), 437-446, Coden: WATRAG Publ.Yr: 1978
illus. refs.
Abs.
Languages: ENGLISH
Doc Type: JOURNAL PAPER

A direct analytical method for identification and determination of the individual volatile acids in raw sewage was developed. The proposed procedure is rapid, omitting tedious sample pretreatment, and thus avoiding possible losses involved in steam distillation, evaporation, or extraction. Raw sewage is directly injected into a gas chromatograph, with Carbowax 20 M on acid washed Chromosorb W column and a flame ionization detector. Sample preparation is confined to addition of solid metaphosphoric acid to the raw sewage, and removal of precipitated proteins and SS by centrifugation. Volatile acids content in raw municipal sewge in Haifa, Israel, was in the range of 150-160 mg/L, of which 120-125 mg/L was acetic acid, 30-33 mg/L propionic acid, 6-8 mg/L butyric acid, 2 mg/L isovaleric acid, and 0.5-1 mg/L valeric acid. (AM)

Descriptors: Gas chromatography; Acids; Sewage; Israel
Identifiers: Haifa; acetic acid; propionic acid; butyric acid; isovaleric acid; valeric acid

79-05426

Effects of chlorination of some volatile organics in primary municipal sewage effluent.

Mori, B. T.; Hall, K. J.; Blazevich, J. N.
Health and Welfare Canada, Health Protection Branch, 1001 W. Pender St., Vancouver, B.C., Can.

JOURNAL OF ENVIRONMENTAL SCIENCE AND HEALTH. PART A: ENVIRONMENTAL SCIENCE AND ENGINEERING A13(7), 445-467, Coden: JESEDU Publ.Yr: 1978
illus refs.
Abs.
Languages: ENGLISH
Doc Type: JOURNAL PAPER

The effects of chlorination on volatile organic components of primary municipal sewage effluent were investigated. Primary sewage effluent had TOCs of 50 mg/L after filtration through 1 l glass filters and 38 mg/L after filtration through 0.45 l membrane filters. Chlorine doses of 0-103 mg/L had no measurable effect on the TOC value. GC-electron capture analysis indicated that 19-21 new peaks consistently resulted from chlorination at treatment plant dosages. Seventeen to 19 of these peaks were neutral or basic compounds. GC with a microelectrolytic conductivity detector demonstrated that 0.01% of the Cl applied to primary effluent at treatment plant levels ends up in stable, volatile chlorinated organic compounds. Furthermore, 40% of the volatile organically bound Cl in chlorinated-dechlorinated primary effluent resulted from the chlorination process. Three of the compounds resulting from chlorination, i.e., chlorobenzene, 1,3-dichlorobenzene and a-chlorotoluene, were positively identified by GC-MS. The concentrations of these compounds were in the lg/L range; 61 other compounds were also identified with varying degrees of certainty. None of these latter compounds appeared to be formed by the chlorination-dechlorination process. (AM)

Descriptors: Chlorination; Municipal wastewaters; Sewage treatment; Gas chromatography; Mass spectroscopy; Wastewater treatment

79-04165

Heavy metal removal with completely mixed anaerobic filter.

DeWalle, F. B.; Chian, S. K.; Brush, J.
Univ. of Washington, Dept. of Environmental Health, Seattle, WA 98105

WATER POLLUTION CONTROL FEDERATION. JOURNAL 51(1), 22-36, Coden: JWPFA5 Publ.Yr: Jan. 1979
illus refs
Eng., Fr., Ger., Port., Span. abs.
Languages: ENGLISH
Doc Type: JOURNAL PAPER

A completely mixed anaerobic filter was subjected to various leachate loadings. At each detention time samples were taken from the influent, effluent, and other sampling ports for AAS heavy metal analysis. The filter was effective in removing heavy metals, the effectiveness increasing with increasing metal concentrations in the effluent The metals were precipitated as sulfides, carbonates, and hydroxides and were removed from the filter as a slurry With decreasing hydraulic detention time the metal removal percentage decreased while the metal content in the bottom slurry increased. Most metals were removed in the lower portion of the filter. Copper was associated with the largest solids particles, but also showed the largest variation in concentrations and largest decrease in removal efficiency at decreasing hydraulic detention times. (AM)

Descriptors: Copper; Zinc; Nickel; Chromium; Filters; Anaerobic systems; Heavy metals; Wastewater treatment
Identifiers. metal removal

79-02832
A clean water project in Poland.
Kieszkowski, M.; Jackson, G. S.
Inst. of Precision Mechanics, Plating Effluent Treatment Dept., 00-967 Warsaw, Pol.
ENVIRONMENTAL SCIENCE & TECHNOLOGY 12(8), 896-899, Coden: ESTHAG Publ.Yr: Aug. 1978
illus. refs.
Sum.
Languages: ENGLISH
Doc Type JOURNAL PAPER
Wastewaters produced in metal finishing operations contain such pollutants as cyanides, chromates, heavy metals, mineral acids, alkalis, oils, greases, detergents, and organic solvents. The most common effluent treatment consists of well-known, conventional chemical procedures which can be done either continuously or batch-wise. They involve several operations, such as alkaline chlorination of segregated cyanide solutions, reduction of segregated chromate solutions, and final neutralization of mixed effluents and precipitation of metal hydroxides, followed by land fill disposition. A schematic diagram of such an effluent treatment plant is presented. Applied research for the Polish metal finishing industry is conducted by the Institute of Precision Mechanics, in Warsaw, which has developed several new effluent treatments and material recovery techniques. The most promising include evaporative recovery of plating bath constituents from rinse waters, RO systems for some plating solutions, improved ion exchange systems for single metal recovery from separated rinse streams, secondary polishing systems for final effluent purification, rinse water purification steps prior to evaporative recovery of RO, foreign metal recovery and other impurity removal from metal finishing solutions, ultrafiltration methods for water reclamation, and solidification of metal finishing sludges containing mixed metallic hydroxides. Other promising techniques include possible utilization of sulfide precipitation of heavy metals, solvent rinsing, ion flotation, C adsorption, and recovery of metals from hydroxide sludges by solvent extraction (FT)
Descriptors: Metal finishing industry; Pollution control; Materials recovery; Reverse osmosis; Ion exchange; Engineering ; Cleaning process; Heavy metals; Poland
Identifiers plating industry; Polish Institute of Precision Mechanics

79-01659
Contribution of chronic petroleum inputs to Narragansett Bay and Rhode Island Sound sediments.
Van Vleet, E. S.; Quinn, J. G.
Univ. of California at San Diego, Inst. of Marine Resources, La Jolla, CA 92093
Symposium on recovery potential of oiled marine northern environments Halifax, N.S , Can. Oct. 10-14, 1977
Recovery potential of oiled marine northern environments. Symposium papers. Edited by J. C. Stevenson. In CANADA FISHERIES RESEARCH BOARD. JOURNAL 35(5), 536-543, Coden: JFRBAK Publ.Yr: May 1978
illus refs.
Eng., Fr. abs.
Languages: ENGLISH
Doc Type: CONFERENCE PAPER
The petroleum hydrocarbon content of sediment cores collected from Narragansett Bay and Rhode Island Sound were compared to a relatively unpolluted sediment core from the Gulf of Maine. Organic components were extracted from the saponified sediment using a toluene-methanol mixture and separated by column chromatography and TLC. GLC analysis identified and quantified 3 hydrocarbon types, unbound, bound or associated with the clay mineral or kerogen matrix, and bound or associated with humic substances. In general 90%-100% of the hydrocarbons were in the unbound form and could be easily extracted with organic solvents. The petroleum hydrocarbons decreased with depth at all stations. Biogenic hydrocarbons (nC25, nC27, nC29, and nC31) made up an increasingly greater percentage of the total with increasing depth. The hydrocarbons in the Narragansett Bay sediments and near surface Rhode Island Sound sediments strongly resembled the hydrocarbons previously reported for the Providence River and upper Narragansett Bay. These petroleum-like hydrocarbons were largely introduced to the river and bay through chronic inputs from a municipal wastewater treatment plant. The hydrocarbons then undergo sedimentation throughout the entire bay and into Rhode Island Sound. Preliminary calculations indicate that K0.2 million t of petroleum hydrocarbons may be transported to the marine environment annually from municipal treatment plants. Most of these hydrocarbons appear to accumulate in estuarine and coastal sediments. (AM)
Descriptors: Sediments; Petroleum; Hydrocarbons; Wastewater treatment plants; Municipal wastes; Marine environments; Estuaries; Rhode Island; Chromatography
Identifiers: Narragansett Bay; Rhode Island sound; Providence River; Gulf of Maine

79-00626

Wastewater from plating works-required pretreatment and disposal of concentrates.

Imhoff, K. R

Ruhrverband und Ruhrtalsperrenverein, Kronprinzenstrasse 37, 4300 Essen 1, FRG

International conference on advanced treatment of wastewater Johannesburg, S. Africa June 13-17, 1977

Advanced treatment and reclamation of wastewater: Conference proceedings. In PROGRESS IN WATER TECHNOLOGY 10(1-2), 419-430, Coden: PGWTA2 Publ.Yr: 1978

illus. refs. (Some in Ger.)

Sum.

Languages: ENGLISH

Doc Type: CONFERENCE PAPER

The Ruhrverband ensures that the wastes of metal finishing establishments in the Ruhr catchment are recycled to the chemical industry; the sale of the wastes covers only transportation costs, but there are savings compared to chemical precipitation and sludge disposal. Wastewater is treated in 118 mostly small plants. Cyanide and chromate-containing wastewaters must be collected separately and pretreated. The central decontamination plant at Iserlohn, and the central treatment plant at Heiligenhaus are described. To supplement the system of wastewater treatment plants 4 impoundments were constructed in the Ruhr valley. The central wastewater treatment plants elimiate 60% of the influent heavy metals. During low flow in the lower Ruhr river a ratio between clean water and treated wastewater of 70:30 is maintained on the average. From this mixture waterworks abstract their water and prepare drinking water by artificial groundwater recharge. (FT)

Descriptors: Federal Republic of Germany; Metal finishing industry wastes; Effluent treatment; Wastewater treatment plants; Industrial effluents; Municipal water supplies; Waste reuse

Identifiers Ruhr valley

79-00567

Chromate handling systems for cooling tower blowdown.

Roensch, L. F.; Feltes, A. L.; Oberhofer, A. W.

Nalco Chemical Co., 2901 Butterfield Rd., Oak Brook, IL 60521

Fifth annual industrial pollution conference Atlanta, Ga. Apr. 19-21, 1977

Fifth annual industrial pollution conference· Proceedings. Edited by L. Delpino and A. Krigman pp. 121-135 Publ.Yr· 1977

Publ: McLean, Va. Water and Wastewater Equipment Manufacturers Association

illus. refs.

Abs.

Languages: ENGLISH

Doc Type: CONFERENCE PAPER

Removal of hexavalent chromate by chemical reduction requires the following 4 steps lower blowdown pH to 3-4 to increase the reaction rate; add a reducing agent; raise pH 08 to precipitate chromium hydroxide; and clarify the effluent to minimize chromium hydroxide carryover. A several fold excess of reducing agent is required to reduce the chromate quantitatively. The amount of acid, reducing agent, and alkali used is a function of the complete chemical composition of the blowdown, the reducing agent used, and the discharge restrictions. Electrochemical reduction involves a series of Fe anodes connected to an electrical source; the block of anodes is placed in a reservoir through which the blowdown flows. Efficiency of chromate removal is decreased when other oxidizing agents are present in solution. A conservative estimate of electrode usage is 4 lb/lb of Cr. Current flow, arrangement of electrodes, and level of gas-liquid interface affect the pattern of electrode dissolution. Chromate can be selectively removed from blowdown by ion exchange with Cl-, sulfate, or hydroxide. Anion resins will not remove trivalent Cr or Zn. A major advantage of ion exchange is that no sludge is produced. Ion column rinse and backwash are returned to the cooling tower. Chemical reduction is generally the most economical. The major drawback of both reduction systems is the need for sludge disposal facilities. (FT)

Descriptors: Chromium compounds; Cooling waters; Wastewater treatment; Water reuse; Reduction; Ion exchange

Identifiers: blowdown

79-00470
Chlorinated tyrosine in municipal waste treatment plant products after superchlorination.
Burleson, J. L.; Peyton, G. R.; Glaze, W. H.
North Texas State Univ., Dept. of Chemistry and Inst. of Applied Sciences, P.O Box 5057, Denton, TX 76203
BULLETIN OF ENVIRONMENTAL CONTAMINATION AND TOXICOLOGY 19(6), 724-728, Coden: BECTA6 Publ.Yr: June 1978
illus. refs.
Sum.
Languages: ENGLISH
Doc Type: JOURNAL PAPER
One milliliter of a 28-lm Cl2/l aqueous solution was added to 1 ml of a 20-lm/l tyrosine solution adjusted to pH 1-2. The reaction proceeded for 30 min, and the mixture was extracted with 1 ml of ether. Analysis of the extract by GC-MS showed approximately equal proportions of mono- and dichlorinated phenylacetonitrile and phenylacetaldehyde; analysis of the N-heptafluorobutyryl n-propyl ester derivative confirmed the presence of chloro- and dichlorotyrosine, which were also found in effluent from superchlorination facilities in use at 3 municipal waste treatment plants. The extent to which these and other possible chlorinated amino acids occur in superchlorinated waste products is not known, but is under investigation. (FT)
Descriptors: Municipal wastewaters; Water; Chlorination; Amino acids; Gas chromatography; Mass spectroscopy; Chlorinated hydrocarbon compounds; Sewage treatment; Sewage treatment plants; Effluents
Identifiers: tyrosine; superclorination

78-04472
Cooling water and boiler possibilities for wastewater reuse.
Morresi, A. C.; Cheremisinoff, P. N.
Hoffmann-La Roche
INDUSTRIAL WASTES 24(2), 33-34, Coden: INWABK Publ.Yr: Mar.-Apr. 1978
illus. no refs.
No abs.
Languages: ENGLISH
Doc Type: JOURNAL PAPER
Cooling towers offer the most readily available source for recyclable water. Cooling towers handling large quantities of water (N100,000 gpm) can use a variety of wastewaters as makeup. The water conservation benefit of cooling towers must be economically justified by balancing the reduced cost of waste treatment against any additional treatment costs needed to produce a reuse stream of acceptable quality. If cooling towers are made secondary users of water, the blowdown will contain more contaminants and require additional treatment before discharge If water with a low dissolved solids content is used as makeup, windage may remove enough impurities so that a blowdown stream is not required. If contaminated water can be used in a cooling tower, the tower can serve as an equalization facility to protect downstream waste treatment from shock loads of pollutants. All cooling tower reuse plans must insure that the prime function of cooling towers-providing cool water to heat exchangers without causing scaling, sliming, or corrosion problems-is not impaired. Cooling tower blowdown has been used as wash water, utility water, flare drum seal water, pump coolant, and tank field water. If chromates are used as corrosion inhibitors in the cooling tower, ion exchange can recover them and make the cooling water acceptable for reuse. Feed water for low-to-medium pressure boilers (N650 psi) requires softening, deaeration, and silica removal. High-pressure boilers require demineralized, deaerated water. Low-pressure steam has been generated in unfired waste heat boilers from some wastewaters. Clean stream condensate is extensively recycled, but boiler blowdown is seldom used. High-pressure boiler blowdown can sometimes be used as makeup water for low-pressure boilers (FT)
Descriptors: Water reuse; Wastewaters; Wastewater treatment; Waste reuse; Cooling systems; Cooling waters; Boilers

78-04471
Treatment of plating wastes from the automotive industry.
Cullinane, M. J., Jr.; Dietz, J. D.
Clark, Dietz and Assoc.-Engineers, Inc.
INDUSTRIAL WASTES 24(2), 29-32, Coden: INWABK
Publ.Yr: Mar.-Apr. 1978
Illus. no refs
Sum.
Languages: ENGLISH
Doc Type: JOURNAL PAPER
Water conservation measures recommended for a Mississippi plant include using spring-loaded shutoff nozzles on water hoses, collecting and returning steam condensate for boiler water makeup, using recycled water in the buffing process, and using counterflow rinsing in the plating operation. Several wastewater segregation practices were also recommended. To meet federal standards, the most cost-effective effluent treatment was reduction followed by chemical precipitation. Complete treatment and direct discharge was more cost effective than pretreatment and discharge to the municipal waste system. The optimum rinse system is a modified countercurrent system with 5 rinse tanks, which reduced water consumption from K400 gpm to J60 gpm. Features incorporated in the treatment design include addition of an acid feeding system for raw waste pH adjustment and use of the abandoned oxidation pond to equalize shock loadings. The treatment process included the following: reduction of Cr+6 in a continuous flow system; equalization of flow wastes; raw waste pumping; pH adjustment in a flash mix tank; and coagulation and settling in a reactor-clarifier. Provision is made for future addition of filters and final pH adjustment. Vacuum filtration and landfilling is the chosen method of sludge disposal. Problems since plant startup in March 1977 have been minimal. Water consumption could be reduced a further 40%-50% if recycle systems and more stringent water conservation measures were used, but these measures do not appear to be economically justified at the present. (FT)
Descriptors: Mississippi; Automotive industry wastes; Metal finishing industry wastes; Chromium compounds; Water conservation; Wastewater treatment; Wastewater treatment plants; Industrial effluents; Reduction; Coagulation

78-03967
Arsenic.
National Research Council-Div. of Medical Sciences-Committee on Medical and Biologic Effects of Environmental Pollutants
2101 Constitution Ave. NW, Wash. DC 20418
Medical and Biologic Effects of Environmental Pollutants
332 pp Publ.Yr: 1977
Publ: Washington, D.C. National Academy of Sciences
Illus. indexes numerous refs. (Some in Chin.; Croatian; Czech ; Dan.; Fr.; Ger.; Ital.; Japanese; Norw.; Pol.; Port.; Russ.; Span)
No abs. Price. $13 75 (pbk.)
Languages: ENGLISH
Doc Type BOOK

The chemistry, environmental distribution, metabolism, biological effects on plants and animals, and biological effects on man of As and As compounds are discussed in detail. The degree of As air pollution due to smelter operations and pesticide use should decrease if currently proposed occupational and environmental standards are promulgated. Arsenic pollution from coal burning is widely dispersed, which minimizes its danger to public health. Common use of shale oil would require removal of As from the oil or more careful monitoring of As. While food supplies normally contain As, the concentrations are very rarely harmful. Water supplies generally contain negligible quantities of As. Industrial effluents often contain As, but the problem is minimized by the self-purification of receiving waters and the improved quality of wastewater discharges. Use of As pesticides was greatly reduced with the introduction of chlorinated hydrocarbon and organophosphorus chemicals. With increasing restrictions on these, however, As chemicals may again be widely used, requiring careful monitoring. Little or no qualitative information is available regarding the fate of arsenicals in the ecosphere, so it is not possible to state with any certainty whether As is building up in any sector. Individual As compounds can be determined only after isolation by volatilization, paper chromatography, GC, or electrophoresis. The continued concern about the association between inorganic arsenic and cancer has raised questions regarding the implications of widespread dispersion of inorganic arsenicals in the environment. Recommendations for future research areas and protocols are given. (SS & FT)
Descriptors: Books; Literature reviews; Arsenic; Arsenic compounds; Metabolism; Humans; Plants; Animals; Foods; Pesticides; Smelting; Chemistry; Pollutant detecti

78-03385
Electrolysis.
Vlahakis, J.; Ouellette, R.
Electrotechnology Vol. 1 Wastewater treatment and separation methods. Edited by R. P Ouellette, J. A King and P. N. Cheremisinoff 193-237, Publ.Yr: 1978
Publ: Ann Arbor, Mich Ann Arbor Science Publishers
illus. refs.
No abs.
Languages: ENGLISH
Doc Type: BOOK CHAPTER
The most important industrial applications of electrolysis, a chemical process by which chemical reactions are produced electrically in solutions or molten salts, are metal recovery and electroextraction, electrochemical organic synthesis, and electroconcentration of solids. Among many specific potential applications are the manufacture of propylene oxide from propylene and water, the treatment of acid mine drainage to recover Fe, reducing the COD of cheese whey waste, the recovery of fatty minerals from edible fats, the regeneration of chromated Al deoxidizers, the treatment of domestic wastes, cyanide and organic waste treatment, and electroflotation. Electrolytic processes produce less pollution than many conventional techniques, and also compare favorably, on an economic basis, with them. Electrolysis is energy competitive with other chemical routes for manufacturing chemical compounds and, as environmental standards become more strict, shoud become more popular in metal recovery and waste treatment applications. (FT)
Descriptors: Electrochemistry; Reduction; Oxidation; Metals; Wastewater treatment; Water purification; Organic wastes; Mine drainage; Materials recovery; Chemical wastes; Waste treatment ; Technology
Identifiers: electrolysis

78-03330
Aluminum manufacturer removes chromium.
Anonymous
INDUSTRIAL WASTES 24(1), 24, 34, Coden: INWABK Publ.Yr: Jan.-Feb. 1978
illus. no refs.
No abs.
Languages ENGLISH
Doc Type: JOURNAL PAPER
A New Hampshire aluminum company installed a Hussong/Couplan Chrome Removal Treatment System to treat its raw effluent. The effluent contains 164 mg/l total Cr, 136 mg/l hexavalent Cr, 620 mg/l total P, and 22.8 mg/l Al. The decision was based on 2 factors. The system reduced the pollutants to the lowest concentrations in the final effluent and met, by a comfortable margin, the requirements of the final EPA regulations and the local municipal sewer code. Another Hussong/Couplan System employing sphagnum peat as the treatment medium can readily be tied into the existing system, in a series flow arrangement, at a later date. Changing conditions can be met without costly, extensive replacement or modification of the present system. The Hussong/Couplan System treats the wastewaters with ferric chloride (FeCl3) and sodium sulfide (Na2S) at a pH in the 5-7 range in such a way as to obtain a specific molar ratio of Cr6+6, FeCl3, and Na2S in the effluent. A massive precipitate is formed which carried down virtually all of the Cr, both hexavalent and trivalent. The system at the Al plant is a 6,000 gpd system and is composed of 3 holding-batch tanks, chemical adders, misers, controls, and sensors. To insure the continuing purity of the discharge, colorimetric checks are made at the precipitation tank. (FT)
Descriptors: Chromium; Aluminum; Metal industry wastes; Effluent treatment; Industrial effluents; Precipitation; Contaminant removal
Identifiers. Hussong/Couplan Treatment System

78-03320
Organochlorinated residues in wastewaters before and after treatment.
Martin, G. B.; Gosselin, C.
Universite Laval, Centre de Recherches en Nutrition, Que. G1K 7P4, Can.
JOURNAL OF ENVIRONMENTAL SCIENCE AND HEALTH-PART A A13(1), 1-11, Coden: JESEDU Publ.Yr: 1978
illus. refs.
Abs.
Languages: ENGLISH
Doc Type: JOURNAL PAPER
PCBs and pesticides were measured in effluent from the primary treatment sand deposition stage and from the secondary oxidation basin stage of the treatment plant of a small Quebecois town. During a 24-hr sampling period, the secondary treatment reduced TDE concentrations from a mean of 0.08 ppb to a mean of 0.03 ppb; DDT concentrations were so close to the detection limit that no conclusions can be drawn. PCBs were reduced from 1.29 to 0.38 ppb. Over a 5-d sampling period, PCB concentrations were 0.50-2.00 ppb before secondary treatment and 0.02-0.60 ppb after it. The pattern of PCB chromatograms was affected by the treatment, with an increase in the proportion of the less chlorinated PCBs evident. (FT)
Descriptors: PCB compounds; Pesticides; DDT; Organochlorine compounds; Wastewater treatment

78-03235

The distribution of heavy metals in anaerobic digestion.

Hayes, T. D.; Theis, T. L.
Cornell Univ., Dept. of Agricultural Engineering, Ithaca, NY 14850

WATER POLLUTION CONTROL FEDERATION. JOURNAL 50(1), 61-72,
Coden: JWPFA5 Publ.Yr: Jan. 1978
illus. refs.
Eng., Fr., Ger., Port., Span. abs.
Languages. ENGLISH
Doc Type: JOURNAL PAPER

Bench scale anaerobic digesters using municipal wastewater sludge were dosed with different levels of heavy metals (Cr+3, Cr+6, Cd, Cu+2, Ni, Pb, and Zn) to determine their distribution and note their effects under operating conditions Dosings were made in both a stepwise and pulse manner. Characteristic responses observed during periods of digester distress included increased volatile acids and total organic carbon, decreased gas production and methane composition, and depressed values of pH. The order of toxicity established in this study was NiK CuKPbKCr+6jCr+4KZn. Toxic limits for Cd were not reached. Metals were rapidly removed from digester supernatant in excess of 95%. The total insoluble portion was divided between inorganic precipitates and the biomass fraction. Between 30% and 60% of the metals were associated with the bacterial cells. Toxic effects became apparent at or near the maximum metals taken up by the digester component. (AM)

Descriptors: Anaerobic process; Sludge digestion; Distribution; Chromium; Copper; Cadmium; Nickel; Lead; Zinc; Municipal wastewaters; Pollutant removal; Heavy metals

78-02754

Chromium removal with activated carbon.

Kim, J. I.; Zoltek, J., Jr.
Univ of Florida, Dept. of Environmental Engineering Sciences, Gainesville, FL 32611

Eighth international conference on water pollution research Sydney, Australia Oct. 17-22, 1976
Eighth international conference on water pollution research. Edited by S. H. Jenkins. In PROGRESS IN WATER TECHNOLOGY 9(1), 143-155, Coden: PGWTA2 Publ.Yr: 1977
illus. refs.
No abs.
Languages: ENGLISH
Doc Type: CONFERENCE PAPER

Mechanisms responsible for Cr adsorption and reduction by activated carbon are described and results are presented to help in the development of a process for Cr+6 removal. The activated carbon used was Filtrasorb 400 and the Cr levels were determined by AAS. A solution of Cr+6 in the presence of activated carbon was reduced to Cr+3 to a greater extent as the pH was increased. Total Cr adsorption increased to a maximum with increasing pH up to an initial Cr+6 concentration of 300M, after which the adsorption decreased. The total amount of Cr adsorbed was a direct function of the initial proton activity in the solution and was a maximum at a mole ratio of protons:Cr+6 of 1 0. Desorption studies were performed at different pH values with various acids and sodium hydroxide (NaOH). Alkaline desorption was more effective than the acid desorption. The Cr+6 was desorbed in the alkaline pH regions, whereas Cr+3 was the prevailing species in the case of acid desorption. Using NaOH, K80% Cr was desorbed at a pH value close to 14. At a Cr+6 concentration higher than the initial proton concentration, an amount equal to the initial amount of protons is first adsorbed, with any remaining removal of Cr being by hydrolytic adsorption. At a concentration lower than the initial proton concentration, reduction of Cr+6 to Cr+3 takes place, with reduced Cr+3 remaining in solution at low pH values. The degree of reduction is a function of the proton:Cr+6 ratio, the initial pH value, and the amount of activated carbon in solution. The final form of adsorbed Cr within the activated carbon is in the hexavalent form. An activated carbon column configuration produced significant Cr+6 removal when the proton:Cr+6 ratio is 1.0. (FT)

Descriptors: Activated carbon; Adsorption; Chromium; Contaminant removal; Wastewater treatment

78-02570
Present art and status of reverse osmosis and ultrafiltration in Japan.
Ohya, H.
Yokohama National Univ., Dept. of Chemical Engineering, Yokohama, Japan
International Congress on Desalination Tokyo, Japan Nov. 27-Dec. 3, 1977
Proceedings of the International Congress on Desalination and Water Reuse: Vols. 1 and 2. In DESALINATION 22(1-3), 223-233, Coden: DSLNAH Publ.Yr: Dec. 1977
illus no refs.
Sum.
Languages: ENGLISH
Doc Type: CONFERENCE PAPER
Japan will have a water supply deficit of 70 billion TPY by 1985. The deficit can be made up by desalination and by multiple reuse of process water. RO seems most economical for water reuse applications. In a typical system, the wastewater is divided into a low salinity stream treated by conventional tertiary treatment systems and a high-salinity system treated by RO. Flow charts for systems processing ion exchange regenerating reagent, soybean fermentation wastes, and bean paste wastes are presented. Manufacturers, distributors, licensees and sublicensees of RO and ultrafiltration systems in Japan are listed. The capacities of RO units distributed by Japanese companies are listed. Typical operational data are given for a new type of cellulose acetate, hollow fine fiber module designed to minimize fouling deposits on membrane surfaces (Hollosep). A tubular module using plastic reinforced porous fiberglass tubes as support is described. A new polyheterocyclic polybenzimidazolone membrane which can withstand strong acid has shown promise in concentrating chromic acid rinses. (FT)
Descriptors: Japan; Reverse osmosis; Filtration; Membranes; Wastewater treatment; Food processing industry wastes; Industrial effluents; Desalination; Technology
Identifiers: ultrafiltration

78-02560
An experience on re-use of waste water discharged from metal plating shop.
Murai, Y.; Yamadera, T.; Koike, Y.
Hitachi Plant Engineering & Construction Co., Water & Waste Water Treatment Div., Tokyo, Japan
International Congress on Desalination Tokyo, Japan Nov. 27-Dec. 3, 1977
Proceedings of the International Congress on Desalination and Water Reuse: Vols. 1 and 2. In DESALINATION 22(1-3), 97-104, Coden: DSLNAH Publ.Yr: Dec. 1977
illus. refs.
No abs.
Languages: ENGLISH
Doc Type: CONFERENCE PAPER
Conventional treatment processes for metal plating wastewaters consist of oxidation, reduction, and coagulation-sedimentation for both rinsing water and used bath. Such treatment does not satisfy recent municipal regulations. A new process treats rinse water, containing the bulk of cyanide and Cr wastes, with ion exchangers; acid or alkaline wastewater is treated by chelate resin after coagulation-sedimentation. The treated water can be returned to the shop. The mixed bed exchanger consists of a strongly acid and a weakly basic anion exchange resin after an activated carbon filter, followed by a strongly basic anion exchanger. At the near neutral pH value of the wastewater made possible by this system, complex cyanides are not precipitated nor cyanide gas produced; free cyanide which passes the mixed bed exchanger is caught by the strongly basic exchanger. Regeneration water and deteriorated bath are treated with sodium hypochlorite and ferric sulfate. Chromium (III) is treated with other cations with a strongly acid exchange resin; hydrogen chromate and chromate ion are treated with other anions by weakly basic exchange resins. Wastewater containing heavy metals other than cyanide and Cr is treated by coagulation and sedimentation, sand filtration, and chelate resins which adsorb the metals selectively in series. (FT)
Descriptors: Wastewater treatment; Cyanides; Metal finishing industry wastes; Chromium; Heavy metals; Ion exchange; Industrial effluents; Resins

78-02556

An integrated industrial waste water treatment system using electroflotation and reverse osmosis.

Roth, H. P.; Ferguson, P. V.
Swissair Engineering, Metals Technology Section, Zurich, Switz

International Congress on Desalination Tokyo, Japan Nov. 27-Dec. 3, 1977
Proceedings of the International Congress on Desalination and Water Reuse. Vols. 1 and 2. In DESALINATION 22(1-3), 49-63, Coden: DSLNAH Publ.Yr: Dec. 1977
illus. refs.
Sum
Languages: ENGLISH
Doc Type: CONFERENCE PAPER

At the Swissair Maintenance and Overhaul Base in Zurich, wastewater and process effluent treatment is centralized except 'for cyanides and chromate plating wastes detoxification. The central treatment for wastewater consists of clarification stages, neutralization, and sludge treatment performed by electroflotation. Process water treatment, consisting of a desalination stage, is performed by RO, including necessary pre- and posttreatment equipment. In the electroflotation process, electrolytically produced minute gas bubbles which adhere to flocculation particles are used to separate clarified water from the sludge phase. Batch treatment times are 20-30 min. The sludge layer which forms on top of the tank is skimmed pneumatically at regular intervals. In this facility, electroflotation is laid out in 2 independent lines with a capacity of 20 m3/hr each. The outlet stream contains J5 ppm SS. Intermediate treatment consisting of post-alum flocculation followed by multimedia pressure filtration, and pH and scale inhibitor conditioning prepares the stream for RO. Modified cellulose acetate spiral module membranes are used. Design recovery rate is 80% on a capacity of 720 m3/d. Automatic flushing devices control membrane fouling. Average salt rejection rates are 98 4%. Daily plant utilization is 16 hr-13 hr for waste and 3 hr for city water. The city water stream has a beneficial effect on membrane flux performance restoration; the bank flushing system needs to be used only every 4 wk. Permeate posttreatment includes degasification, pH adjustment, and carbon bed filtration. Operational costs of the facility are calculated at about $1.92/1,000 gal. (FT)

Descriptors Switzerland; Wastewater treatment; Reverse osmosis; Flotation; Desalination; Industrial effluents; Neutralization; Sludge treatment
Identifiers· electroflotation; Swissair; Zurich

78-01295

A mercury-free accelerated method for determining the chemical oxygen demand of large numbers of water samples by autoclaving them under pressure with acid-dichromate.

Ryding, S. -O.; Forsberg, A.
National Swedish Environment Protection Board, Inst. of Physiological Botany, Algal Assay Lab., Box 540, S-751 21 Uppsala, Sweden

WATER RESEARCH 11(9), 801-805, Coden· WATRAG Publ.Yr: 1977
illus. refs. (Some in Scan.)
Abs.
Languages: ENGLISH
Doc Type· JOURNAL PAPER

In order to fulfill the objective of a water control program based on frequent sampling in several wastewater treatment plants, rivers, and lakes, a simplified method for measuring COD was developed. · The procedure, called the RR method, includes small sample and reagent volume, rapid addition of a mixture of all reagents to the sample, exclusion of mercury, and autoclaving at 120degC for 1 hr in flasks with fitted glass stoppers. To avoid dilution before analysis, the method was adapted for wastewater (10-300 mg/l O2) and fresh water (10-100 mg/l O2). Parallel analyses on different types of water samples according to standard methods showed that the yield by the RR method was about 10% lower. With water from the wastewater treatment plant at Uppsala (COD around 20 mg/l O2), the two methods gave an identical result. The somewhat lower yield was mostly due to decreased dichromate concentration and oxidation temperature The lower oxidation potential made correction for chloride interference unnecessary below 1 g/l Cl-. The RR method also showed a good correlation to the values for potassium permanganate-consumption. Parallel analyses of 318 samples from 14 wastewater-receiving lakes gave the correlation coefficient r=+0.90. (AM)

Descriptors: COD; Acids; Chromium compounds; Water sampling; Sweden; Wastewater treatment plants; Lakes; Rivers; Measuring methods
Identifiers: acid-dichromate; autoclaving; Uppsala; RR method

78-01288
Advanced treatment methods for electroplating wastes.
Jakobsen, K.; Laska, R.
EPA, Office of Energy, Minerals, and Industry, 401 M St. SW, Wash., DC 20460
POLLUTION ENGINEERING 9(10), 42-46, Coden: PLENBW Publ.Yr: Oct. 1977
Illus. no refs.
Sum.
Languages. ENGLISH
Doc Type: JOURNAL PAPER
The EPA withdrew its metal finishing industry effluent guidelines because they appeared potentially destructive to the economic viability of the industry. The EPA is sponsoring projects to help electroplaters achieve control of effluents economically and effectively. Ion exchange and reverse osmosis show the most technical and economical promise of the several control technologies under development, but each technology will optimally apply to specific wastewater streams. Pilot and full scale demonstrations showed that chromate solution recovered by ion exchange can be recycled into product manufacture without sacrificing product quality. The chromate composition of a demonstration plant effluent is being reduced from 2,700 ppm to 1-2 ppm. The treatment system was designed to treat 60 gpm of influent and discharge an effluent which is within statutory limits for pH and heavy metal content. A demonstration combined reverse osmosis with solar evaporation for disposal of removed contaminants and achieved zero discharge to navigable waters. Water consumption was cut by 750,000 gal/mo. (FT)
Descriptors: Federal agencies; Federal regulations; Wastewater treatment; Metal finishing industry wastes; Reverse osmosis; Ion exchange
Identifiers: EPA

78-00417
Rate of microbial transformation of polycyclic aromatic hydrocarbons: A chromatographic quantification procedure.
Herbes, S. E.; Schwall, L. R.; Williams, G. A.
Oak Ridge National Lab., Environmental Science Div., Oak Ridge, TN 37830
APPLIED AND ENVIRONMENTAL MICROBIOLOGY 34(2), 244-246, Coden: AEMIDF Publ Yr: Aug. 1977
Illus. refs.
Abs.
Languages ENGLISH
A chromatographic procedure was developed for isolating and quantifying microbial transformation products of qtC-labeled polycyclic aromatic hydrocarbons. PAH-utilizing cultures were isolated from an oil-drilling site and a wastewater treatment unit. Microorganisms were grown by inoculation of soil and wastewater samples into autoclaved basal inorganic medium saturated with naphthalene or phenanthrene; several bacterial strains were isolated. PAH transformation rates were determined by centrifuging cells from an exponential culture, washing them, and suspending them in a hydrocarbon-free basal medium. A qtC-labeled PAH compound was added in 4 ll of acetone, and the culture incubated at 23.C for 2-3 d. Extracts were combined and evaporated to near dryness, and the residue redissolved in benzene. Transformation rates of naphthalene, anthracene, benz(a)anthracene, and benz(a)pyrene by a mixed bacterial population were measured. With this procedure, extremely slow or incomplete transformations may be quantified that would not be detectable by previously used techniques. (AA & from Text)
Descriptors: Aromatic compounds; Hydrocarbons; Cyclic compounds; Bacteria; Chromatography; Effluents; Carcinogens; Water pollutants; Microorganisms
Identifiers: PAH

77-05373
Removing soluble metals from wastewater.
METZNER, A.V.
Ecodyne Corp., Industrial Waste Treatment Div.
Water & Sewage Works, 124(4): 98-101, Apr. 1977 Publ.Yr: 1977
Languages: ENGLISH
Descriptors: ZINC; CHROMIUM; WASTEWATER TREATMENT; COPPER; TECHNOLOGY; IRON; NICKEL
Identifiers: METAL REMOVAL; CYANIDES

77-05240
The sulfex heavy metal waste treatment process.
FEIGENBAUM, H.N.
Permutit Co., E. 49 Midland Ave., Paramus, NJ 07652
Proceedings of the Fifth Annual Industrial PollutionConference. Edited By L. Delpino and A. Krigman. Mclean,Va.: Water and Wastewater Equipment ManufacturersAssoc-iation, 1977. 629-642 Publ.Yr: 1977
Languages: ENGLISH
Descriptors: IRON; COOLING WATERS; CHROMIUM COMPOUNDS; METAL FINISHING INDUSTRY WASTES; SULFUR COMPOUNDS; CHROMIUM; HEAVY METALS; WASTEWATER TREATMENT
Identifiers: SULFEX; PERMUTIT COMPANY

77-05215
Chromate handling systems for cooling tower blowdown.
ROENSCH, L.F.
Nalco Chemical Co., 2901 Butterfield Rd., Oak Brook, IL60521
Proceedings of the Fifth Annual Industrial PollutionConference. Edited By L. Delpino and A. Krigman. Mclean,Va.: Water and Wastewater Equipment ManufacturersAssoc-iation, 1977. pp. 121-135 Publ.Yr: 1977
Languages: ENGLISH
Descriptors: COOLING WATERS; ECONOMICS; ION EXCHANGE; WASTEWATER TREATMENT; CHROMIUM COMPOUNDS

77-00407
Waste treatment for a metal finishing plant.
YOUNG, R.A.
Pollution Engineering, 1301 S. Grove Ave., Barrington, IL60010
Pollution Engineering, 8(9): 40-41, Sept. 1976 Publ.Yr: 1976
Languages: ENGLISH
Descriptors: MARYLAND; WATER QUALITY; ENGINEERING; METAL FINISHING INDUSTRY WASTES; CHROMIUM; WASTEWATER TREATMENT
Identifiers. GENERAL ELECTRIC CO.

76-05299
Pollution abatement through the treatment of industrial waste water with ion exchange resins.
WAITZ, W.H., JR.
Rohm and Haas Co., Pollution Control Research Dept., 5000Richmond St., Philadelphia, PA 19137
Institute of Environmental Sciences: 22nd AnnualTechnical Meeting. Mt. Prospect, Ill : Institute ofEnvironmental Sciences, 1976. pp. 491-495 Publ.Yr: 1976
Languages: ENGLISH
Descriptors: WASTEWATER TREATMENT; RESINS; ECONOMICS; CYANIDES; METALS; BORON; ION EXCHANGE; INDUSTRIAL EFFLUENTS
Identifiers: CHROMATES

74-03243
Gas-liquid chromatographic separation of sulfur from chlorinated pesticide residues in wastewater samples.
KUO, C.L.
County Sanitation Districts of Los Angeles County, 2101S. Workman Mill Ln., Whittier, CA 90601
Bulletin of Environmental Contamination andToxicology, 9(2), 108-115, Feb 1973 Publ.Yr: 1973
Languages· ENGLISH
Descriptors: CHLORINE; CHROMATOGRAPHY; HALOGENATED PESTICIDES; MEASURING METHODS; PESTICIDE RESIDUES; SULFUR REMOVAL; WASTE WATERS
Identifiers GLC

74-02237
Petroleum hydrocarbons and fatty acids in wastewater effluents.
QUINN, J.G.
WHOI, Main St., Woods Hole, MA 02543
Water Pollution Control Federation. Journal, 45(4) 704-712, Apr. 1973 Publ.Yr: 1973
Languages: ENGLISH
Descriptors: CHROMATOGRAPHY; EFFLUENTS; HYDROCARBONS; LIPIDS ; PETROLEUM; WASTE WATER TREATMENT PLANTS
Identifiers: FATTY ACIDS

72-06467 72-5TF-00981
Continous effluent analysis halts chromate batch tests.
ANONYMOUS,
UNKNOWN
Chemical Processing, Chicago, 34(12): 9, Mid-Nov. 1971 Publ.Yr· 1971
Languages: ENGLISH
Descriptors: COLORIMETRY; WASTEWATER TREATMENT; CHROMATES
Identifiers: TURBIDIMETERS

72-01025 72-1TF-00228
Chromate pollution of water--detection, effects, and prevention: A bibliography.
STEMPLE, RUTH
AEC, Oak Ridge National Lab., Y-12 Technical Library, TN
U. S. Atomic Energy Commission. Oak Ridge NationalLaboratory. Oak Ridge, Tenn. Report No. ORNL·TM-3450, 20pages, Oct 1971 Publ.Yr: 1971
Languages: ENGLISH
Descriptors: INDUSTRIAL WASTES; WATER POLLUTANTS; WASTEWATER TREATMENT; CHROMATES
Identifiers: BIBLIOGRAPHY

71-04278 71-3TF-00407
Uptake of nitrosyl 106-ruthenium on chitin and chitosan from waste solutions and polluted sea-water.
MUZZARELLI, RICCARDO A. A.
Univ. of Bologna, Ciamician Chemical Inst., It.
Water Research. New York, 4(6): 451-455, June 1970
Publ.Yr: 1970
Languages: ENGLISH
Descriptors: POLYMERS; CHROMATOGRAPHY; RADIOACTIVE WASTES; CHELATION; WASTEWATER TREATMENT
Identifiers: RADIONUCLIDE UPTAKE

71-02852 71-2TF-00342
Rid sewage of toxic inorganics.
FULMER, MARY
Columbus, OH
Water and Wastes Engineering. New York, 8(1): 26-27, Jan. 1971 Publ.Yr: 1971
Languages: ENGLISH
Descriptors: CHROMIUM; INDUSTRIAL WASTES; ION EXCHANGE; WASTEWATER TREATMENT; SEWAGE

82-02074
Fate of Priority Pollutants in Large Municipal Treatment Plants
Lue-Hing, C.; Lordi, D.T.; Kelada, N.P.
Metro. Sanitary Dist. Greater Chicago, IL
AIChE Nat. Mtg. Boston, Portland, Chicago 1980
IN "WATER - 1980 VOL. 77, NO. 209, pp. 144-150, Publ.Yr: 1981
AICHE, 345 EAST 47 ST., NEW YORK, NY 10017
SUMMARY LANGUAGE - ENGLISH
Languages: ENGLISH
The U.S. Environmental Protection Agency has issued a list of 129 priority pollutants which include metals, cyanides, phenols, pesticides and other organics. The Metropolitan Sanitary District of Greater Chicago (MSDGC) which operates seven treatment plants has regulated heavy metals, phenols and cyanides for a number of years. The heavy metals found in the influents include chromium, copper, zinc, iron, nickel, and cadmium. Substantial but variable removals do occur with the effluents reaching some background level for a specific metal. These metals are found to concentrate in the treatment plant sludges. The results of a screening of the occurrence of the priority organics at four of the MSDGC treatment plants showed relatively few organics occurring in detectable quantities. The concentrations of those found were highly variable but generally less than 100 mu g/l in the influents and less than 20 mu g/l in the effluents.
Descriptors: pollutants; organic compounds; heavy metals; effluents; wastewater treatment plants; sludge; cyanides; phenol; pesticides; contamination

82-00550
Method and Apparatus for Removing Biodegradable Compounds From Wastewater
Bhattacharyya, A.
Republic Steel Corp., Cleveland, OH Hanna Furnace Corp., Buffalo, NY
U.S. PAT. OFF. GAZ VOL. 1007, NO. 1, p. 274, Publ.Yr: 1981
Pat. No. 4,271,013
Languages: ENGLISH
A method for removing biodegradable compounds selected from the group which include oils, volatile organics, phenolics free and fixed ammonia compounds, thiosulfates, thiocyanates, cyanides, sulfides and the like from a feed wastewater: distilling said wastewater to remove said free ammonia compounds, oils and volatile organics.
Descriptors: Biodegradation; Ammonia compounds; Cyanides; Wastewater treatment; Patent; Instruments; Pollution control equipment

81-03951
Process for the Removal of Cyanides From Effluent
Kuit, W.J.M.; Babcock, A.R.
Cominco Ltd., Vancouver, Can
U. S. PAT. OFF. GAZ. VOL. 1003, NO. 2, p. 703, Publ.Yr: 1981
Pat. No. 4,250,030
Languages: ENGLISH
A method for the removal of dissolved free and complex cyanides from water-containing effluent which comprises controlling the pH of said effuent in a range of about 7.0 to 8.5 and contacting said effuent with an effective amount of an insoluble solid iron sulfide chosen from at least one of ferrous sulfide and ferric sulfide having particle sizes smaller than about 300 mu for a period of at least about 5 minutes to remove said dissolved free and complex cyanides to a desired level, said effective amount being sufficient to give a weight ratio of said iron sulfide to total cyanide in said effluent of greater than about 2:1.
Descriptors: Cyanides; Effluents; Wastewaters; pH; Wastewater treatment; Water purification

81-03880
Response of Methane Fermentation to Cyanide and Chloroform
Yang, J.; Speece, R.E.; Parkin, G.F.; Kocher, W.; Gossett, J.
Drexel Univ., Phila., PA
Tenth Int. Conf. IAWPR Toronto, Ont. Jun. 23-27, 1980
WATER SCI. & TECH. VOL. 13, NO. 2, Publ.Yr: 1981
Languages: ENGLISH
The anaerobic digestion process has excellent potential for the treatment of warm industrial wastewaters. However this process is generally considered to be especially sensitive to many toxicants which occur occasionally or chronically in industrial wastewaters. Cyanide and chloroform were selected as sample toxicants which show inhibition of methane production at concentrations less than 1 mg/l. This study was directed toward an evaluation of the inhibition pattern of these two toxicants. The effect of toxicant concentration on methane production recovery pattern was determined. Suspended growth systems were to study toxicity acclimation characteristics and recovery patterns.
Descriptors: Industrial effluents; Toxicants; Cyanides; Methane; Anaerobic digestion; Chloroform

81-03819
Ion-Precipitate Flotation of Iron-Cyanide Complexes
Bucsh, R.D ; Spottiswood, D.J.; Lower, G.W.
Int. Nickel Inc , Sterling Forest, N.Y.
J. WATER POLLUT. CONTR. FED. VOL. 52, NO. 12 , pp. 2925-2930 , Publ.Yr: 1980
Languages: ENGLISH
An ion-precipitate flotation process is proposed to remove iron-cyanide complexes from wastewaters. A quarternary amine, tricaprylmethyl ammonium chloride, is used to precipitate the iron-cyanide complexes as a waxy solid, a material that is floated Both cyanide and ferrocyanide removal are included, but the emphasis of this work is on ferricyanide removal. The variables studied were: surfactant dosage, the presence of chloride ion, solution flow rate, airflow rate, initial ferricyanide concentration, and the pH of the feed.
Descriptors. Ions; Flotation; Wastewaters; Solids; Flow rates; Chemical compounds; Iron compounds
Identifiers: iron-cyanide

81-01797
Foam flotation treatment of industrial wastewaters: Laboratory and pilot scale.
Wilson, D. J.; Thackston, E L.
Vanderbilt Univ., Nashville, TN 37235
U S. Environmental Protection Agency. Office of Research and Development. Environmental Protection Technology Series Coden EPTSBT Publ.Yr: Jun 1980
Illus. 90 refs.
Abs. (Available from NTIS, Springfield, VA 22161)
Languages: ENGLISH
TREATMENT CODES: D .(DESCRIPTIVE) ; I .(INVESTIGATIVE/OBSERVATION)
A floc foam flotation pilot plant removed Pb and Zn in dilute aqueous solution to quite low concentrations. Design improvements are presented. The floc foam flotation of Zn is readily carried out with aluminum hydroxide (Al(OH)3) and sodium lauryl sulfate (NLS). Chromium hydroxide is floated with NLS, but adsorbing colloid flotation of Cr+3 with ferric hydroxide (Fe(OH)3) or Al(OH)3 yielded better results. Cobalt and Ni levels are reduced to =1 mg/L by flotation with Al(OH)3 and NLS. The Mn+2 levels can be reduced to 1-2 mg/L by flotation with Fe(OH)3 and NLS. Floc foam flotation of Cu was compatible with several precipitation pretreatments (soda ash, lime, Fe(OH)3, and Al(OH)3), although modifications were needed to prevent interference from excessive Ca or CO3-2. Therefore, floc foam flotation can be used as a polishing treatment. The flotation of mixtures of Cu+2, Pb+2, and Zn+2 was conducted using Fe(OH)3 and NLS. The flotation of simple and complexed cyanides and mixtures of metal cyanide complexes was also conducted with Fe(OH)3 and NLS; a pH of =5 is optimum. A surface adsorption model for floc foam flotation was analyzed and accounted for the effects of surfactant concentration, ionic strength, specifically adsorbed ions, and surfactant hydrocarbon chain length. (AM)
Descriptors: Flotation; Industrial wastes; Wastewater treatment; Pilot plants; Engineering; Flocculation; Ions; Surfactants; Iron compounds; Aluminum compounds; Heavy metals; Zinc; Nickel; Manganese; Chromium; Cobalt; Copper; Lead; Chemical treatment; Adsorption
Identifiers: floc foam flotation

81-01743
Mechanism and kinetics of cyanide ozonation in water.
Zeevalkink, J. A.; Visser, D. C.; Arnoldy, P.; Boelhouwer, C.
Univ. of Amsterdam, Lab. of Chemical Tech., Plantage Muidergracht 30, Amsterdam, Holland
Water Research 14(10), 1375-1385, Coden: WATRAG Publ.Yr: 1980
Illus. refs.
Abs.
Languages: ENGLISH
Doc Type: JOURNAL PAPER
TREATMENT CODES: T .(THEORETICAL/MATHEMATICAL) ; D .(DESCRIPTIVE) ; I .(INVESTIGATIVE/OBSERVATION)
The rate of oxidation by O3 of potassium cyanide into cyanate was measured in alkaline aqueous solutions buffered at a pH of 11.8 and a temperature of 20degC. The initial cyanide concentration was usually 100 g/m3. Under these conditions, the reaction rate can, within the experimental error, be described by an equation which is of first order in O3 and independent of the cyanide concentration. The reaction rate is so large that the conversion is limited by mass transfer. Mass balances show that 1 mole of O3 oxidizes 1 mole of cyanide. The oxidation of cyanide is part of a reaction sequence similar to the O3 decomposition mechanism. For both reactions-cyanide oxidation and O3 decay-mechanisms are proposed. The kinetics predicted for the O3 decay are in agreement with experimental data. The mechanism proposed for the cyanide oxidation predicts a reaction rate equation which has been supported by experimental evidence. (AM)
Descriptors: Kinetics; Ozonation; Mathematical analysis; Wastewater treatment; Nitrogen compounds; Chemical treatment; Metal finishing industry wastes; Chemical reactions; Engineering
Identifiers: cyanide ozonation

81-00537
Automatic water quality analyzers for wastewater collection and treatment
Murakami, K.
Ministry of Construction, Public Works Research Inst., Water Quality Section, Toyosato-cho, Tsukuba-gun, Ibaraki-ken, Japan
WATER POLLUTION CONTROL FEDERATION. JOURNAL 52(5), 938-942, Coden JWPFA5 Publ.Yr: May 1980
no refs.
Eng., Fr., Ger., Port., Span. abs.
Languages: ENGLISH
Doc Type: JOURNAL PAPER
The current status of automatic water quality analyzers and sensors for wastewater collection and treatment systems in Japan is described. If automatic analyzers for cyanide, Cr, Cd, and measurement and recording of organic loading discharged from wastewater treatment plants are to be implemented in Japan, automatic analyzers for organic substances will have to be used widely. The performance of automatic analyzers and sensors for treatment process controls was evaluated at various locations. (AM)
Descriptors. Heavy metals; Toxic materials; Water quality; Monitoring instruments; Wastewater treatment; Japan
Identifiers: automatic analyzers and sensors

81-00522
Inhibitory effects on nitrification by typical compounds in coke plant wastewaters.
Ramadori, R.; Beccari, M.; Passino, R.; Tandoi, V.
IRSA-CNR, Via Reno 1-00198 Rome, Italy
ENVIRONMENTAL TECHNOLOGY LETTERS 1(5), 245-252, Publ.Yr: May 1980
illus 16 refs.
Abs.
Languages: ENGLISH
Doc Type: JOURNAL PAPER
Nitrifying sludge for the nitrification kinetic studies was obtained from a steady state laboratory biological plant, mixed with a synthetic NH3 substrate to a predetermined concentration, and then introduced into a batch reactor. The kinetics were monitored by determining the amount of alkali used up in neutralizing the acidity produced during oxidation of NH3 to NO2-. The method is automated and gives more accurate results than those obtained with respirometric methods. Aniline, quinoline, pyridine and sulfides are significant inhibitors. (FT)
Descriptors. Nitrification; Coke; Industrial effluents; Wastewaters; Biological treatment; Aromatic compounds; Chemical reactions; Nitrogen compounds; Sulfur compounds; Mathematical analysis; Laboratory methods; Thermodynamics; Kinetics; Bacteria
Identifiers: nitrification inhibition; coke plant wastewaters; 8 inhibitor types; aniline; quinoline; cyanides; phenols; pyridine; methylpyridine; sulfides; thiocyanates; Nitrosomas

81-00508
Evaluation of reverse osmosis membranes for treatment of electroplating rinsewater.
McNulty, K J.; Hoover, P. R.
Abcor, Inc., Walden Div., Wilmington, MA 01887
U.S. ENVIRONMENTAL PROTECTION AGENCY. OFFICE OF RESEARCH AND DEVELOPMENT. ENVIRONMENTAL PROTECTION TECHNOLOGY SERIES Coden: EPTSBT Publ.Yr: May 1980
illus. refs.
Abs. (Available from NTIS, Springfield, VA 22161)
Languages: ENGLISH
The RO system described functions by concentrating the chemicals for return to the processing bath while purifying the wastewater for reuse in the rinsing operation. The effectiveness of the PA-300, PBIL, NS-100, NS-200, SPPO, B-9, and CA membranes were evaluated in tests on rinsewater with extreme pH and oxidant levels. The PA-300 membrane performed well with copper cyanide, zinc cyanide, and chromic acid rinsewaters, while the NS-200 and PBIL membranes performed best with acid Cu rinsewaters. After commercializing the membranes, applications in various metal finishing, non-ferrous metal, steel, and inorganic industries may be found. (FP,AM)
Descriptors: Reverse osmosis; Membranes; Wastewater treatment; Metal finishing industry wastes; Waste treatment
Identifiers: electroplating rinsewater

81-00400
Calorimetric studies of biodegradation processes in biological wastewater treatment.
Fortier, J. -L.; Reboul, B.; Philip, P.; Simard, M. -A.; Picker, P.; Jolicoeur, C.
Universite de Sherbrooke, Centre d'Applications en Calorimetrie et Thermodynamique, Sherbrooke, Quebec J1K 2R1, Canada
WATER POLLUTION CONTROL FEDERATION. JOURNAL 52(1), 89-97,
Coden: JWPFA5 Publ.Yr: Jan 1980
illus 25 refs.
Eng., Fr., Ger., Port., Span. abs.
Languages: ENGLISH
Doc Type: JOURNAL PAPER
The heat associated with biodegradation reactions in culture suspensions was investigated by using flow microcalorimetry. Bacterial cultures obtained in batch or continuous recycling processes (activated sludge) were mixed with synthetic biodegradable effluents, and the heat output was monitored as a function of time. With batch cultures, experiments were conducted at various growth stages and COD levels. The response of both types of cultures to a sudden change in the COD content of the effluent and to the addition of toxic contaminants (e.g., cyanide, Cd, Cr, Cu, and phenol) was also studied. The heat flux measured is in general accordance with the data obtained by respirometric techniques. Moreover, the fast response of the flow microcalorimeter makes it possible to follow the kinetic response of the system after composition changes. The calorimetric method shows promise for applications in the control of biological wastewater treatment. (AM)
Descriptors: Biodegradation; Biological treatment; Wastewater treatment; Activated sludge process; Bacteria; Measuring methods; Monitoring methods; Engineering; Kinetics; Oxygenation; COD; Effluents; Absorption spectroscopy
Identifiers: calorimetry

80-07619
The Environmental impact of refinery effluents (EIRE study): CONCAWE's assessment.
Boisvieux, P.; Bonnier, P. E ; Goethel, G. F.; Jenkins, R H.; Lemlin, J. S.; Levi, J. D.; Marmin, A.; Pauluis, C. D. A.; Rotteri, S.; Sibra, P.; Verschueren, K.
CONCAWE, Water Pollution Management Group, The Hague, Netherlands
STICHTING CONCAWE. REPORT Coden: CONRD3 Publ.Yr. Feb 1980
illus. no refs.
Sum.
Languages: ENGLISH
Doc Type: REPORT
The environmental impact of refinery liquid effluents is reviewed. Refinery effluents in general are not a major source of pollution because of substantial achievements by the oil refining industry in reducing hydrocarbon discharges. The existing parameters, as measured by current techniques, provide an adequate assessment of refinery effluent quality. Recent legislative proposals designed to control the concentration of specific compounds would be difficult to implement for refinery discharges. Most hydrocarbons display short life under normal environmental conditions. High molecular weight compounds, e.g., polynuclear aromatics which persist for some time, can be reduced to prevailing background levels by modern effluent treatment techniques. Heavy metals can also be reduced to background levels in water treatment plants at refineries. Other pollutants found in refinery effluents (phenols, NH3, sulfides, and cyanides) are normally reduced by preliminary treatment and can be further reduced to very low levels by biological treatment. (FT.MS)
Descriptors: Environmental impact; Refineries; Effluents; Hydrocarbons; Petroleum industry; Aromatic compounds; Heavy metals; Wastewater treatment

80-07559
A process for simultaneous removal of cadmium and cyanide.
Poon, C. P. C.; Soscia, K. P.
Univ. of Rhode Island, Kingston, RI 02881
INDUSTRIAL WATER ENGINEERING 17(2), 28-30, Coden: IWEGAA Publ.Yr: Mar-Apr 1980
illus. refs.
No abs.
Languages: ENGLISH
Doc Type: JOURNAL PAPER
A compact reactor was used in which seawater or sodium chloride solution was electrolyzed below a column of metal finishing waste containing both cyanide and Cd. The chemicals generated from the seawater electrolysis rose in the reactor, bringing about reactions that completed the treatment process. A combination of lower power input and a deeper wastewater column is more effective in treatment. Several series of experiments were conducted. For experiments using lower Cd concentrations, values were obtained <4,189 mg/kWh with the lowest one at =2,000 mg/kWh. The effect of initial Cd concentration is illustrated. Greater removal per unit power consumption was achieved with greater rinse water depth. (FT)
Descriptors: Cyanides; Cadmium; Heavy metals; Contaminant removal; Seawater; Laboratory methods; Electrochemistry; Metal finishing industry wastes; Wastewater treatment
Identifiers: electrolysis

80-07506

Cyanide problems in municipal wastewater treatment plants.

Lordi, D. T.; Lue-Hing, C.; Whitebloom, S. W.; Kelada, N.; Dennison, S.
Metropolitan Sanitary District of Greater Chicago, Research and Development Dept., 100 E. Erie St., Chicago, IL 60611

51st annual conference of the Water Pollution Control Federation Anaheim, California Oct 1-6, 1978
Water Pollution Control Federation
WATER POLLUTION CONTROL FEDERATION. JOURNAL 52(3), 597-609, Coden: JWPFA5 Publ.Yr: Mar 1980
illus. refs.
Eng., Fr., Ger., Port., Span. abs.
Languages: ENGLISH
Doc Type: JOURNAL PAPER CONFERENCE PAPER

Data from daily monitoring of wastewater effluents from the treatment plants of the Metropolitan Sanitary District of Greater Chicago indicated that all effluents occasionally exceed the limit of 0.025 mg cyanide/L set by the Illinois Pollution Control Board. Of the larger plants serving industrialized areas, the Calumet plant, which receives wastes from 5 major steel mills, averaged 0.095 mg/L, and plants serving electroplating industries had averages of 0.027-0.07 mg/L. The major proportion of the cyanide is in the complex form. The plants serving industrial areas averaged 0.080-0.096 kg cyanide removed per milliliter treated wastewater. A revised standard for discharges to Illinois waters of 0.10 mg/L was established as a total cyanide monthly average and 0.20 mg/L for any 24-hr composite. (AM)

Descriptors: Cyanides; Wastewater treatment plants; Municipal wastewaters; Illinois; Industrial wastes; Toxic materials
Identifiers: Chicago; Metropolitan Sanitary District of Greater Chicago

80-07031

Does the permit system force technology?

Josephson, J.
E S & T, 1155 Sixteenth St NW, Washington, DC 20036

E S & T 13(8), 911-912, Coden: ESTHAG Publ.Yr: Aug 1979
no refs.
No abs.
Languages: ENGLISH
Doc Type: JOURNAL PAPER

''Forcing'' may be defined either as compelling the use of known technology, which might not otherwise be used to meet guidelines, or as pushing water pollution control technology beyond its present limits. Cases in which the state-of-the-art might have to be pushed occur where regulations require that discharges may have to meet standards of ''best available technology economically available'' by 1984-87. One example of absolute requirements for this involves treatment requirements for any effluent containing toxic substances. To control toxics, EPA suggests the direct limitation of specific toxicants, where feasible. When not feasible, the proposed alternative approach centers on setting limits on certain, more commonly regulated, parameters which can be agreed upon and which will not result in greatly increased compliance monitoring costs. Certain parameters (TSS, BOD, cyanide, etc.) will be used as indicators of toxic pollutants. While the verdict is not yet delivered concerning this approach, the trend seems to be toward permit consolidation, or the ''one stop'' permit. Another initiative aimed at ''forcing'' technology, and curbing violations may well be the increased use of criminal statutes to enforce laws and regulations. Under these guidelines, most stringent action would be taken against violators when health and environmental damage or risk are great (especially if the discharge violations involve toxic or hazardous pollutants), when data are withheld for falsified, or where there are flagrant cases of willful or negligent misconduct. (FT)

Descriptors: Wastewater treatment; Government regulations; Legislation; Pollution control; Industrial effluents; Technology; EPA; Toxic materials
Identifiers: best available technology economically achievable

80-06267
Kinetics of reaction of cyanide and reduced sulfur species in aqueous solution.
Luthy, R. G.; Bruce, S. G., Jr.
Carnegie-Mellon Univ., Dept. of Civil Eng., Pittsburgh, PA 15213
E S & T 13(12), 1481-1487, Coden: ESTHAG Publ.Yr: Dec 1979
illus. refs.
Abs.
Languages: ENGLISH
Doc Type: JOURNAL PAPER
Interactions of cyanide and reduced S species in aqueous solution can produce thiocyanate. Kinetics of the reactions of cyanide and polysulfide and cyanide and thiocyanate were investigated. The reaction of cyanide and polysulfide is mixed order and the order decreases from 1.9 to 1.3 as pH increases from 8.2 to 12; this is largely accounted for by a decrease in reaction order with respect to cyanide as pH increases above the pKa for hydrogen cyanide. Catalysis and inhibition studies showed that high concentrations of NH3 were inhibitory and that coal char fines were catalytic. The rate of reaction of cyanide and polysulfide is =>=3 orders of magnitude faster than reaction of cyanide and thiosulfate depending on pH value. A neutral or slightly alkaline solution containing the order >=10-3 M total sulfide may form polysulfide on exposure to O2 and in the presence of cyanide there should be reaction to yield thiocyanate. (AM)
Descriptors: Kinetics; Cyanides; Sulfur compounds; Wastewaters; Chemical reactions; Coal conversion; Oxidation; Catalysis
Identifiers: thiocyanate; coke effluents; sulfide

80-06231
A practical approach to wastewater treatment for the metal finishing industry.
Olthof, M.
Duncan, Lagnese and Assoc., Inc., 3185 Babcock Blvd., Pittsburgh, PA 15237
WATER POLLUTION CONTROL ASSOCIATION OF PENNSYLVANIA. MAGAZINE 12(6), 18-27, Publ.Yr: Nov-Dec 1979
illus. no refs.
No abs.
Languages: ENGLISH
Doc Type. JOURNAL PAPER
General guidelines for the development of a pollution control program for a metal finishing plant are provided. In-plant considerations for the design of a treatment system include water flow reduction, optimizing the dilution ratio, counterflow rinsing, cascade rinsing, segregation, process solutions, floor spillage, and dragout reduction. Practical treatment methods include hexavalent chromium treatment, cyanide treatment, and general rinse water treatment Reference is made to promising new technologies and their potential application. The chemistry outlined forms the basis for the design of wastewater treatment facilities. A typical flow schematic for a metal finishing plant is presented. Miscellaneous treatment approaches include integrated system, ion exchange, and RO. The potential for recovery of one of the plating solutions should be evaluated during the planning stage for pollution control facilities; Ni, Cr, Cu, and Zn plating baths are possibilities. (FT)
Descriptors: Metal industry wastes; Wastewater treatment; Pollution control; Engineering; Ion exchange; Reverse osmosis; Chromium; Cyanides
Identifiers: metal finishing industry; hexavalent Cr treatment; cyanide treatment; general rinse water treatment

80-06158
Removal of inorganic pollutants from wastewater during reclamation for potable reuse.
Smith, R.; Siebert, M. L.; Hattingh, W. H. J.
CSIR, National Inst. for Water Research, P.O. Box 395, Pretoria 0001, South Africa
WATER S. A 6(2), 92-95, Coden: WASADV Publ.Yr: Apr 1980
illus. refs.
Abs.
Languages: ENGLISH
Doc Type: JOURNAL PAPER
The effectiveness of a pilot water reclamation plant for removing certain toxic and aesthetically undesirable inorganic chemical constituents from wastewater designed for potable reuse is described. Process stages include high lime treatment, primary clarification, ammonia stripping, secondary clarification, sand filtration, chlorination, and activated carbon adsorption. The high lime and activated carbon treatments were the most significant for the removal of Cd, Cu, Pb, Hg, and Zn, while the chlorination stage was the most effective for cyanide removal. High lime treatment alone was sufficient for the complete removal of highly toxic Cd and Pb Concentrations of all 6 substances investigated were reduced to below the detection limits of the analytical methods used. (AM.FT)
Descriptors. Cyanides; Wastewater treatment; Pollutant removal; Heavy metals; Pilot plants; Toxic materials; Inorganic compounds; Potable waters; Chlorination; Mercury; Activated carbon; Engineering; South Africa; Cadmium; Copper; Lead; Zinc
Identifiers: Pretoria; Stander Water Reclamation Plant

80-06116
Bench-scale testing for residual waste treatment.
Vuceta, J.; Anderson, J. R.; TeKippe, R. J.; Calkins, R. J.; Bishop, W. J.
James M. Montgomery Consulting Engineers, Inc., 555 E. Walnut St., Pasadena, CA 91101
50th annual conference of the Water Pollution Control Federation Philadelphia, Pennsylvania Oct 2-7, 1977
Water Pollution Control Federation
WATER POLLUTION CONTROL FEDERATION. JOURNAL 51(10), 2366-2383, Coden: JWPFA5 Publ.Yr: Oct 1979
illus. refs.
Eng., Fr., Ger., Port., Span. abs.
Languages: ENGLISH
Doc Type: JOURNAL PAPER CONFERENCE PAPER
The most effective technologies for centralized treatment of various industrial residual wastes generated in Ventura County, California, were determined. Steps required for a successful treatment of metallic wastes include cyanide and cyanate oxidation, Cr (VI) reduction, hydroxide and sulfide precipitation, coagulation and flocculation, and filtration. Ion exchange and carbon sorption are not usually required. Coagulation and flocculation of nonmetallic toxic wastes, followed by filtration and carbon sorption, is more effective in the removal of toxic nonmetallic substances from wastewaters than foam fractionation coupled with carbon sorption. A batch mode of operation is superior to continuous flow. (AM)
Descriptors: Waste treatment; Filtration; Heavy metals; Coagulation; Flocculation; Industrial wastes; Wastewater treatment; Cyanides; California; Oxidation; Precipitation; Toxic materials
Identifiers: bench-scale testing; Ventura County

80-05527
Industrial pretreatment.
Heritage, J.
EPA Journal, 401 M St. SW, Washington, DC 20460
U.S. ENVIRONMENTAL PROTECTION AGENCY. E P A JOURNAL 5(7), 17-18, Coden: EPAJDB Publ.Yr. Jul-Aug 1979
no refs.
No abs.
Languages: ENGLISH
Doc Type: JOURNAL PAPER
The cleanup program announced by the EPA will remove toxic chemicals, e.g., cyanide, hexavalent Cr, Cd, and Pb, from industrial wastes currently being discharged into municipal plants. The pretreatment standards will affect =30,000 industrial plants, cover 34 major industrial types, and control discharges of 129 toxic industrial pollutants. The standards will set numerical limits on the quantities of specific pollutants that can be discharged by a plant in an industry category To simplify the pretreatment job, EPA is demonstrating new technology To back up the pretreatment action, the Clean Water Act, Clean Air Act, RCRA, and TSCA will be implemented (FT)
Descriptors: EPA; Federal regulations; Toxic materials; Chemicals; Industrial wastes; Water pollutants; Wastewater treatment plants; Technology; Effluent standards
Identifiers: cleanup program; RCRA; TSCA

80-04756
Electrodialysis of effluents from treatment of metallic surfaces.
Kagaku Kojo, Feb 1979. Translated by Bureau of Reclamation, Denver, CO
Itoi, S.
Asahi Glass Co., Specialty Chemicals and Plastics Marketing Div., 1-2-1 Marunouchi, Chiyoda-ku, Tokyo, 100 Japan
DESALINATION 28(3), 193-205, Coden: DSLNAH Publ Yr: Mar 1979
illus. refs.
Sum.
Languages: ENGLISH
Doc Type: JOURNAL PAPER
Electrodialysis is applied for treatment of effluents from washing after galvanization, and specifically from washing after Ni galvanization. This method is useful for recovery of galvanization reagents used in various processes. Electrodialysis is probably applicable for treatment of effluents from washing after cyanide galvanization or galvanization with other substances. To establish a closed system for the effluents discharged during the treatment processes for metallic surfaces, techniques for industrialization of electrodialysis were developed not only for the recovery of useful components, but also for recycled use of water. Industrialization of electrodialysis is expected in the near future. To establish these techniques, technical development is needed not only in ion-exchange membranes and electrodialyzers, but also in systematized processes, including all related techniques, e g., pretreatments. (MS)
Descriptors: Industrial effluents; Metal finishing industry wastes; Water recycling; Dialysis; Materials recovery; Electrochemistry; Wastewater treatment
Identifiers: electrodialysis; galvanization

80-04557
Cyanide and thiocyanate in coal gasification wastewaters.
Luthy, R. G ; Bruce, S. G., Jr.; Walters, R. W.; Nakles, D. U.
Carnegie-Mellon Univ , Dept of Civil Eng., Pittsburgh, PA 15213
WATER POLLUTION CONTROL FEDERATION. JOURNAL 51(9), 2267-2282, Coden. JWPFA5 Publ.Yr: Sep 1979
illus. refs.
Eng., Fr., Ger., Port., Span. abs.
Languages: ENGLISH
Doc Type: JOURNAL PAPER
Procedures for preservation and identification of cyanide and thiocyanate in coal gasification wastewater, possible pathways for aqueous-phase formation of thiocyanate, and reaction of cyanide and polysulfide-S to produce thiocyanate were investigated. Cyanide preservation procedures require removal of sulfide and high levels of carbonate. An analytical procedure for thiocyanate determination based on a Cu-pyridine colorimeiric method with preextraction was tested successfully on most samples. The reaction of cyanide with polysulfide-S was =1.54+/-0.25 with a rate constant of =0.24 (M/L)-0.54/min. Control of cyanide-polysulfide reaction requires selective control of sulfide oxidation kinetics. (AM)
Descriptors: Wastewaters; Cyanides; Energy sources; Coal gasification; Chemical reactions; Absorption spectroscopy; Organosulfur compounds; Oxidation; Contaminant removal
Identifiers: thiocyanate; polysulfide; preservation

80-01965
Hydrogen peroxide in sewage treatment.
Sims, A. F. E.
Interox Chemicals, Ltd., Moorfield Rd., Widnes, Cheshire WA8 0JU, England
ENVIRONMENTAL POLLUTION MANAGEMENT 9(4), 107-110, Coden. EVPMBX Publ.Yr. Jul-Aug 1979
illus. no refs.
ISSN: 0367-150X
No abs.
Languages: ENGLISH
Doc Type JOURNAL PAPER
TREATMENT CODES: D .(DESCRIPTIVE) ; M .(METHODOLOGICAL) ; A .(APPLICATIONS)
The most notable advantage of using hydrogen peroxide (H2O2) in wastewater treatment is its ability to control the odor and corrosion problems caused by H2S. Hydrogen peroxide converts available sulfide to inert S and provides a preferential source of consumable O2 to prevent further sulfide formation. The preferred method of administration is by injecting the H2O2 directly into the main using a positive-action metering pump operating in conjunction with the sewage flow. It can also be used to control sulfide in sludge as well as upgrade biological oxidation systems. In treating industrial effluents, H2O2 oxidizes cyanide to relatively nontoxic cyanate and biodegrades phenols. (FT)
Descriptors: Oxidants; Wastewater treatment; Chemical oxidation; Odors; Corrosion; Hydrogen compounds; Contaminant removal
Identifiers: hydrogen peroxide

80-01928
Methods for neutralizing toxic electroplating rinsewater-part 3.
Marin, S.; Trattner, R. B.; Cheremisinoff, P. N.
New Jersey Inst. of Technology, Newark, NJ 07102
INDUSTRIAL WASTES 25(5), 22-23, Coden: INWABK Publ.Yr: Sep-Oct 1979
refs.
ISSN: 0537-5525
No abs.
Languages: ENGLISH
Doc Type: JOURNAL PAPER
TREATMENT CODES: M .(METHODOLOGICAL) ; D .(DESCRIPTIVE)
In the removal of Cr from electroplating rinsewater, the treatment is intended to convert Cr+6 to Cr+3, and then to precipitate it as the insoluble hydroxide. The reduction is performed with sodium bisulfite (NaHSO3) at a pH of 2.0, with the precipitation occurring at pH 8.5, using caustic for the pH adjustment. A pH recorder-controller is used to measure the pH and add the NaHSO3 under automatic oxidation-reduction potential (ORP) control. When the ORP indicates a value of 300 mV, the chromates are reduced, and the addition is stopped. After 15 min of mixing, the pH is adjusted to 8.5, and after =15 min of additional stirring, the precipitated hydroxides are allowed to settle. In the removal of cyanide and alkali wastes, the cyanides are 1st converted to cyanates with a 15% solution of sodium hypochlorite (NaOCl) at a pH >10, and are then oxidized to N and CO2 with the NaOCl solution at pH 8.5. When the ORP reaches a range of 350-400 mV (indicating that all cyanides have been oxidized) the wastewater changes from a clear, transparent green to sky blue. Complete oxidation takes =10 min. The treated water is allowed to settle for =2 hr, during which time small amounts of metals, e.g., Cu and Ag, will be precipitated as insoluble hydroxides. (FT)
Descriptors: Industrial wastes; Wastewater treatment; Chromium; Cyanides; Precipitation; Chemical oxidation; Reduction; pH; Metals; Toxic materials
Identifiers: electroplating rinsewaters; automated control; sodium bisulfite; sodium hypochlorite; hydroxides

80-01866
Methods for neutralizing toxic electroplating rinsewater-part 1.
Marin, S.; Trattner, R. B.; Cheremisinoff, P. N.; Perna, A. J
New Jersey Inst. of Technology, Newark, NJ 07102
INDUSTRIAL WASTES 25(3), 50-52, Coden: INWABK Publ.Yr: May-Jun 1979
illus. no refs.
ISSN: 0537-5525
No abs.
Languages: ENGLISH
Doc Type: JOURNAL PAPER
TREATMENT CODES: M .(METHODOLOGICAL) ; A .(APPLICATIONS) ; D .(DESCRIPTIVE)
Rinsewaters from the electroplating process contain high concentrations of cyanides and chromates. To comply with US EPA discharge standards several chemical processes have been developed to destroy the cyanides and chromates. For cyanide the most common form of treatment is alkaline chlorination oxidation by sodium hypochlorite or Cl2 plus sodium hydroxide addition to the waste. Electrolytic decomposition and ozonation are also effective treatments for cyanide wastes. Chromium waste treatment involves reduction and precipitation processes. Reducing agents include ferrous sulfate, sodium bisulfate, and sulfur dioxide; neutralizing compounds include lime slurry or caustic. Batch treatment is necessary in shops having a total daily flow <30,000 gpd, whereas continuous treatment is recommended for volumes >30,000 gpd. (FT)
Descriptors: Metal finishing industry wastes; Cyanides; Chromium compounds; Wastewater treatment; Contaminant removal; Chemical oxidation; Neutralization; Reduction
Identifiers: electroplating

80-01856
Disinfection and oxidation of wastes by chlorine dioxide.
Rauh, J. S.
Olin Corp., Olin Water Services, 3155 Fiberglas Rd., Kansas City, KS 66115
JOURNAL OF ENVIRONMENTAL SCIENCES 22(2), 42-45, Coden: JEVSAG Publ.Yr: Mar-Apr 1979
illus. refs.
ISSN: 0022-0906
No abs.
Languages: ENGLISH
Doc Type: JOURNAL PAPER
TREATMENT CODES: M .(METHODOLOGICAL)
Although in acidic, organic-free environments, Cl shows a slight advantage over chlorine dioxide (ClO2) in dosages <0.75 mg/L, in an alkaline environment, ClO2 far exceeds the performance of Cl. This is due primarily to the dissociation of hypochlorous acid to the hypochlorite ion in the alkaline environment. A comparison of effective dosage concentrations and contact time of the 2 in sewage effluent shows that a dosage of 0.25 mg/L of ClO2 gave better kill than 0.75 mg/L of Cl. The best performance was a dosage of 2.0 mg/L of ClO2, which gave a complete kill in =30 sec, while 5.0 mg/L of Cl failed to give a complete kill after 5 min of contact time. As an oxidant, ClO2 is selective to some compounds considered wastewater pollutants. Sulfide-containing gases and waste products of petroleum refining, coal coking, black liquor evaporations, viscose rayon manufacturing, and natural gas purification are frequently scrubbed with alkaline solutions and require treatment before discharge. Between pH 5.0 and 9.0 an average of 5.2 parts by weight of ClO2 oxidizes 1 part by weight of H2S, expressed as sulfide ion, instantaneously to the sulfate ion. ClO2 oxidizes simple cyanide to cyanate and/or CO2 and N. It can also be used over a wide pH range and in organic contaminated systems for biocontrol and for the control of industrial odors. These capabilities, combined with an on-site technology that adapts easily to existing process facilities, make it a logical choice when considering wastewater treatment alternatives. (FT)
Descriptors: Chlorine compounds; Wastewater treatment; Disinfectants; Oxidation; Water treatment; Odors; Pollutant removal
Identifiers: chlorine dioxide

80-01339
Effluent guidelines and standards; electroplating point source category; pretreatment standards for existing sources.
c/o E. P. Hall, Effluent Guidelines Div. (WH-552), 401 M St. SW, Washington, DC 20460
FEDERAL REGISTER 44(175), 52589-52629, Coden FEREAC Publ.Yr: Sep 7, 1979
Illus. no refs.
Sum.
Languages: ENGLISH
Doc Type: JOURNAL PAPER
TREATMENT CODES: D .(DESCRIPTIVE) ; G .(GENERAL OR REVIEW) ; W .(NEWS)
Effective Oct. 9, 1979, this regulation limits the concentrations or mass and requires pretreatment of certain pollutants that may be introduced into publicly owned treatment works by operations in the electroplating point source category. For plants with a flow of >=38,000 L/d, the promulgated standards specifically limit indirect discharges of cyanide, Pb, Cd, Cu, Ni, Cr, Zn, and Ag, and total metal discharge, the sum of the individual concentrations of Cu, Ni, Cr, and Zn. For plants with a process wastewater flow of <38,000 L/d, these standards limit only Pb, Cd, and cyanide. The specific numerical limitations are given. (FT)
Descriptors: EPA; Federal agencies; Federal regulations; Wastewater discharges; Metal finishing industry wastes; Cyanides; Heavy metals; Water pollutants; Industrial effluents ; Effluent standards
Identifiers: final rule; electroplating point source category

80-00487
Plant demands require reliable instrumentation.
McClain, T. L.; Goswami, S. R.
R. E. Warner & Assoc., 2130 W. Park Dr., Lorain, OH 44053
WATER AND WASTES ENGINEERING 16(2), 26-31, 66-67, Coden: WWAEA2 Publ Yr: Feb 1979
Illus. refs.
ISSN: 0043-115X
No abs.
Languages: ENGLISH
Doc Type: JOURNAL PAPER
TREATMENT CODES: M .(METHODOLOGICAL) ; A .(APPLICATIONS)
Available control parameters for wastewater treatment plants are listed, and their applications are discussed. The closed-loop system, the pacing system, and the radio controlled system are schematically diagrammed. The closed-loop system is comprised of a process; a measuring subsystem; and a controlling subsystem consisting of the controller, the final control element, and the control agent. The pacing system involves the controlled feeding of a ''slave'' material in proportion to the ''master'' material. This system can be modified to a true automatic loop by developing a radio control system in which both flows are measured and brought to a radio controller system where their quotient is compared to the desired ratio. Major process control parameters in the treatment of water and wastewater are flow rate, level, pH, oxidation-reduction potential, and residual Cl. Additional parameters commonly used to evaluate the degree of treatment include conductivity, temperature, turbidity, and DO. Several other parameters are measured using more sophisticated methods, e.g., ion selective electrodes and cyanide and TOC analyzers. These methods are relatively new and generally require pretreatment of the sample to remove interfering agents in free or combined form or to change the parameter to a more desirable one. All the systems described share the common goals of releasing the operator from manually making adjustments and providing for more efficient use of chemicals and energy. (FT)
Descriptors: Wastewater treatment plants; Water treatment plants; Monitoring instruments; Engineering; Data systems; Technology
Identifiers: automated control

79-06686

Photo processing sludge; New Comstock lode?

Frank, A.

Sludge Magazine, P.O. Box 1067, Silver Spring, MD 20910

SLUDGE MAGAZINE 2(1), 22-26, Publ.Yr: Jan.-Feb. 1979

illus no refs

No abs.

Languages: ENGLISH

Doc Type: JOURNAL PAPER

The combination of new technologies, favorable economics, and stringent pollution controls is leading to in-plant recovery, especially within the photoprocessing industry. There is no typical photographic processing effluent, according to the industry's trade association, but faced with the possibility of industry-wide regulation under the Federal Water Pollution Control Act, the trade association sponsored the ANSI development of a standard to identify those substances which might be present and establish acceptable analytical techniques. The standard identifies 30 elements and characteristics that may be found in photo processing effluent. Only Ag and total cyanides have received regulatory cognizance to date. Effluent standards designed to restrict direct discharges of Ag and cyanides were established by the EPA in July 1976. New standards are expected from the EPA by Feb. 1, 1980, which could be so stringent as to preclude large concentrations of Ag and cyanides from accumulating in municipal treatment plant sludge. Many photo processors are not waiting for EPA's new regulations for reasons of economics. Silver, at $1.25-$5/oz, is reason enough to pretreat wastewaters. Eastman Kodak Company markets a simple, inexpensive Ag recovery system suitable for smaller processors. Pilot tests using a 2-stage disposal cartridge filtration system had a Ag recovery of 99.99%. Filter press and sludge evaporation techniques are examined. To assess the leaching potential of Ag and ferrocyanide column tests were performed under conditions simulating landfill; Ag and ferrocyanide were released from sludges in particulate form only and were rapidly filtered and bound within the soil. (FT)

Descriptors: Economics; Technology; EPA; Silver; Cyanides; Materials recovery; Photography; Leaching; Feasibility studies ; Federal regulations; Industrial effluents

Identifiers: Eastman Kodak Co.; Federal Water Pollution Control Act

79-06677

Second-stage activated sludge treatment of coke-plant effluents.

Ganczarczyk, J. J.

Univ. of Toronto, Dept of Civil Engineering, Toronto, Ontario M5S 1A4, Canada

WATER RESEARCH 13(4), 337-342, Coden: WATRAG Publ.Yr: 1979

illus. refs.

Abs.

Languages: ENGLISH

Doc Type: JOURNAL PAPER

The efficiency of the 2nd stage activated sludge treatment of coke plant effluents depends substantially on an effective quality equalization of the wastewater and consistent ammonia (NH3) stripping pretreatment. In a pilot plant study, warm weather conditions favored the necessary NH3 oxidation. The studied system showed j90% NH3 oxidation and was characterized with very fast recoveries from shock NH3 loadings. The mixed liquor temperature was an important factor affecting the performance of the nitrification unit. An effective nitrification can be achieved under winter conditions with the application of a heating system in the aeration tank. (FT)

Descriptors: Activated sludge process; Coke; Industrial effluents; Biological treatment; Cyanides; Ammonia; Nitrification; Pilot plants; Laboratory methods; Wastewater treatment

Identifiers: coke plant effluents

79-04997

The impact of toxic pollutants on disposal from wastewater systems.

Schwartz, H. G., Jr.; Buzzell, J. C., Jr.
Sverdrup Corp., 800 N. Twelfth Blvd., St. Louis, MO 63101

INDUSTRIAL WATER ENGINEERING 15(6), 14-20, Coden: IWEGAA Publ.Yr: Oct.-Nov. 1978
illus. refs.
Sum.
Languages. ENGLISH
Doc Type: JOURNAL PAPER

A broad overview is provided of the current state of knowledge regarding the effects of toxic pollutants of publicly owned treatment works (POTWs) on the water, land, and air environments to which they may ultimately be released. The 65 classes of pollutants referenced in the Clean Water Act contain 129 specific elements or compounds identified as priority pollutants. These include 13 metals and 114 organics, plus cyanides and asbestos. The need for controlling their discharge is apparent. Many of them can interfere with the efficient operation of POTWs, or pass through them to affect the environment adversely Metals can inhibit biological processes or accumulate in waste sludges, preventing them from being used for agricultural purposes. Incineration of contaminated sludges may release the metals to the atmosphere, and leaching from landfills may return them to the aqueous environment. Organics can have similar impacts. Some of them can be stripped from the waste stream and discharged to the atmosphere during waste treatment. Establishment of equitable pretreatment standards will be difficult, especially in the area of organic compounds. There is little information available regarding sources, quantities, treatability, variability, health effects, and environmental impact of these pollutants at the low concentrations encountered, but EPA has embarked on an extensive program to develop an adequate data base upon which to formulate standards. (FT)

Descriptors: Wastewater treatment plants; Toxic materials; Organic compounds; Metals; Environmental impact; Federal regulations; Water quality standards; EPA
Identifiers: Clean Water Act

79-03874

Pre-treatment of coke-plant effluents.

Ganczarczyk, J. J.
Univ. of Toronto, Dept. of Civil Engineering, Toronto 181, Ont. M5S 1A1, Can.

TORONTO. UNIVERSITY. DEPT. OF CIVIL ENGINEERING PUBLICATION Coden: PUTED9 17 pp Publ.Yr: June 1978
illus. refs.
Abs.
Languages. ENGLISH

In the majority of North American coke-plants, the effluents are composed of excess flushing liquor and condensates from primary and final coolers and the benzol plant. At some plants wastewaters from ammonium sulfate crystalization, tar still, gas desulfurizers and cyanide strippers contribute to these effluents. The effluents contain biodegradable (BOD) and non-biodegradable organics, specific organics (e.g., phenols), cyanide, thiocyanate, other mineral sulfur compounds and ammonia. Their flow may vary widely depending on coal moisture content and the specific design and operation of the plant. The methods and strategies of pretreatment for coke-plant effluents practiced in some typical plants are discussed. A statistical analysis of an ammonia stripping tower performance is also presented. Pretreatment of coke-plant effluents seriously effects the performance of the subsequent wastewater biological treatment (carbonaceous oxidation and nitrification). An example illustrates the effectiveness of biohydrolysis of thiocyanate measured in a full-scale treatment process and in pilot-scale nitrification experiments. (AM)

Descriptors: Industrial effluents; Wastewater treatment; Ammonia; BOD; Organic compounds; Cyanides; Coke; Sulfur compounds; Nitrification; Chemical oxidation

79-03136

Waste water treatment at Climax.

Gott, R. D.
Climax Molybdenun Co., Climax Mine, Climax, CO 80429

1977 American Mining Congress mining convention. San Francisco, Calif. Sept. 11-14, 1977
American Mining Congress: 1977 mining convention: Session papers. Set No. 5. Environmental Controls I & II 30 pp Publ Yr: (n.d.)
Publ: Washington, D.C. American Mining Congress
illus. no refs.
No abs.
Languages: ENGLISH
Doc Type: CONFERENCE PAPER

Process definition for wastewater treatment at Climax incorporates countercurrent ion exchange for Mo removal, followed by Swift electrocoagulation-electroflotation for heavy metals removal with a polishing filter for final effluent clarification. Sodium hypochlorite is added prior to the electroflotation basin as an oxidant for cyanide destruction. Pilot scale operations indicate essentially all the Fe and Mn and K 90% of the Zn, Cu, Mo, and cyanide are removed. The Mo removed by the ion exchange unit is processed by solvent extraction-crystallization producing a marketable sodium molybdate. Skim electroflotation products will be chem fixed and returned to the tailing area for impoundment. The inclusion and adaptation of the Swift Lectro Clear process to treatment of process water at Climax is considered a first for the mineral industry. (MS)

Descriptors: Molybdenum; Wastewater treatment; Mineral recovery; Mining wastes; Ion exchange

79-03061
Industrial applications of ozone.
Stopka, K.
U.S. Ozonair Corp.
INDUSTRIAL WASTES 24(3), 23-24, Coden: INWABK Publ.Yr: May-June 1978
illus. no refs.
No abs.
Languages: ENGLISH
Doc Type: JOURNAL PAPER
European and Japanese fisheries use ozone (O3) for sterilization purposes. Improved treatment of industrially contaminated wastewater is obtained by enriching the air used for oxygenation with 5% O3. Sulfuric acid is added to pH 2-4, along with .05-1 g of ferric or aluminum chloride, followed by alkalization to pH 6.5-7.5 with lime. This precipitates most organics, solvents, oils, resins, fatty esters, and toxic metals. At a retention time of 6-10 min, 20 mg/L of O3 usually will produce an effluent acceptable to most environmental requirements. Cyanide decomposition can be speeded up by as much as 100 times through Cu catalysis. With appropriate pretreatment, ozonation of composite wastewater from a resin manufacturer reduced phenol from 272 to 0, formaldehyde from 376 to 0, and total SS from 2,470 to 160 mg/L. The COD in acidic wastewater from an edible oil processing plant was reduced from 10,500 to 320 mg/L, a 96% reduction. For industries requiring ultrapure water, the treatment system consists of an electrolytic coagulator tank, a 20l filter, an ion exchange bed, an O3 system with 2% O3 concentration from predried air and efficient contactors able to dissolve instantly 1 mg/L O3 into the liquid, and an activated carbon filter and 0.2l filter on discharge. Incorporation of an ozonation unit before a RO unit can prevent membrane clogging. (FT)
Descriptors: Ozonation; Wastewater treatment; Engineering

79-02832
A clean water project in Poland.
Kieszkowski, M.; Jackson, G. S.
Inst of Precision Mechanics, Plating Effluent Treatment Dept., 00-967 Warsaw, Pol.
ENVIRONMENTAL SCIENCE & TECHNOLOGY 12(8), 896-899, Coden: ESTHAG Publ.Yr: Aug. 1978
illus. refs.
Sum.
Languages: ENGLISH
Doc Type: JOURNAL PAPER
Wastewaters produced in metal finishing operations contain such pollutants as cyanides, chromates, heavy metals, mineral acids, alkalis, oils, greases, detergents, and organic solvents. The most common effluent treatment consists of well-known, conventional chemical procedures which can be done either continuously or batch-wise. They involve several operations, such as alkaline chlorination of segregated cyanide solutions, reduction of segregated chromate solutions, and final neutralization of mixed effluents and precipitation of metal hydroxides, followed by land fill disposition. A schematic diagram of such an effluent treatment plant is presented. Applied research for the Polish metal finishing industry is conducted by the Institute of Precision Mechanics, in Warsaw, which has developed several new effluent treatments and material recovery techniques. The most promising include evaporative recovery of plating bath constituents from rinse waters, RO systems for some plating solutions, improved ion exchange systems for single metal recovery from separated rinse streams, secondary polishing systems for final effluent purification, rinse water purification steps prior to evaporative recovery of RO, foreign metal recovery and other impurity removal from metal finishing solutions, ultrafiltration methods for water reclamation, and solidification of metal finishing sludges containing mixed metallic hydroxides. Other promising techniques include possible utilization of sulfide precipitation of heavy metals, solvent rinsing, ion flotation, C adsorption, and recovery of metals from hydroxide sludges by solvent extraction. (FT)
Descriptors: Metal finishing industry; Pollution control; Materials recovery; Reverse osmosis; Ion exchange; Engineering ; Cleaning process; Heavy metals; Poland
Identifiers: plating industry; Polish Institute of Precision Mechanics

79-00693

Evaluation of EPA recommended treatment and control technology for blast furnace wastewater.

Wong-Chong, G. M.; Caruso, S. C.
Carnegie-Mellon Inst. of Research, 5000 Forbes Ave., Pittsburgh, PA 15213

AMERICAN SOCIETY OF CIVIL ENGINEERS. ENVIRONMENTAL ENGINEERING DIVISION. JOURNAL 104(EE2), 302-321, Coden: JEEGAV Publ.Yr: Apr. 1978
illus. refs.
Abs.
Languages: ENGLISH
Doc Type: JOURNAL PAPER

An evaluation of the EPA-recommended technology for treating blast furnace wastewater, esstenially SS removal and recirculation of water, found the technology inadequate to produce effluent quality in compliance with the 1977 guidelines that include ammonia (NH3), cyanide (CN), and phenol. The evaluation examined an extensive data base consisting of reponses to a questionnaire, long-term plant operation data, a field survey, and a literature review, while the EPA effluent limitation guidelines were developed from a very limited data base. Alkaline chlorination and gas-liquid mass transfer were examined for controlling NH3, CN, and phenol. Suspended solids removal from the blast furnace scrubber and cooler wastewater can be achieved by gravity settling Effluent SS levels of about 50 mg/l can be reliably achieved in clarifiers with the aid of a flocculant. The water usage for scrubbing and cooling blast furnace can be significantly reduced by conducting material and energy balances around the scrubber cooler system. The control of the scrubber and cooler water pH may offer a feasible and probably least costly alternative to controlling the NH3 or CN and phenol content of the blowdown to comply with effluent limitations at some blast furnace plants. The EPA-proposed use of alkaline chlorination is effective for the removal of free CNs, but uses costly chemicals. This process will not destroy the complex iron cyanides and can create a problem by releasing chloroorganics to the receiving waters. In almost all cases, once-through systems were within the 1977 limits for all parameters except SS. (FT & SS)

Descriptors: Technology; Wastewater treatment; Water pollution control; Effluent standards; EPA; Furnaces; Cooling waters; Ammonia; Cyanides; Organic compounds; Water reuse; Chlorination; Suspended solids; Scrubbers; pH
Identifiers: phenol

79-00626

Wastewater from plating works-required pretreatment and disposal of concentrates.

Imhoff, K R
Ruhrverband und Ruhrtalsperrenverein, Kronprinzenstrasse 37, 4300 Essen 1, FRG

International conference on advanced treatment of wastewater Johannesburg, S. Africa June 13-17, 1977
Advanced treatment and reclamation of wastewater: Conference proceedings. In PROGRESS IN WATER TECHNOLOGY 10(1-2), 419-430, Coden: PGWTA2 Publ.Yr: 1978
illus. refs. (Some in Ger.)
Sum.
Languages: ENGLISH
Doc Type: CONFERENCE PAPER

The Ruhrverband ensures that the wastes of metal finishing establishments in the Ruhr catchment are recycled to the chemical industry; the sale of the wastes covers only transportation costs, but there are savings compared to chemical precipitation and sludge disposal. Wastewater is treated in 118 mostly small plants. Cyanide and chromate-containing wastewaters must be collected separately and pretreated. The central decontamination plant at Iserlohn, and the central treatment plant at Heiligenhaus are described. To supplement the system of wastewater treatment plants 4 impoundments were constructed in the Ruhr valley. The central wastewater treatment plants elimiate 60% of the influent heavy metals. During low flow in the lower Ruhr river a ratio between clean water and treated wastewater of 70:30 is maintained on the average. From this mixture waterworks abstract their water and prepare drinking water by artificial groundwater recharge. (FT)

Descriptors: Federal Republic of Germany; Metal finishing industry wastes; Effluent treatment; Wastewater treatment plants; Industrial effluents; Municipal water supplies; Waste reuse
Identifiers: Ruhr valley

79-00591

The Sulfex heavy metal waste treatment process.

Feigenbaum, H. N.
Permutit Company, Inc., E. 49th St. and Midland Ave., Paramus, NJ 07652

Fifth annual industrial pollution conference Atlanta, Ga. Apr. 19-21, 1977
Fifth annual industrial pollution conference: Proceedings. Edited by L. Delpino and A. Krigman pp 629-642 Publ.Yr: 1977
Publ: McLean, Va. Water and Wastewater Equipment Manufacturers Association
illus. no refs.
Abs.
Languages. ENGLISH
Doc Type: CONFERENCE PAPER

The Sulfex process removes heavy metals from solution in the form of S- precipitates. The iron sulfide (FeS) used as the source of S- is added to the system as a slurry prepared by combining ferrous sulfate, a soluble sulfide, and lime. The insoluble FeS forms a sludge blanket in a properly operated precipitator which serves as a source of excess unreacted S-. The metal residuals in the effluent are normally lower than can be obtained by the hydroxide process. The Sulfex process overcomes complexing and chelating agents. Hexavalent Cr can be reduced and removed in one step along with other metals and does not have to be segregated for pretreatment. Cost savings may be realized by not having to use alkalis to raise pH above 8-9 as is necessary for hydroxide precipitation along with additional acid to readjust the pH to acceptable discharge range. Dual media pressure filters are provided for polishing removal of SS carried over from the reactor. Cyanide bearing wastes must be pretreated. (FT)

Descriptors: Heavy metals; Precipitation; Effluent treatment ; Metal finishing industry wastes; Wastewater treatment; Industrial effluents; Sulfur compounds; Cyanides
Identifiers. Sulfex

79-00496

The use of automatic analysers on waste water treatment plant.

Meredith, W. D.
Kent-Belgium S.A., Place du Nouveau Marche aux Grains 10, 1000 Brussels, Bel.

International workshop on instrumentation and control for water and wastewater treatment and transport systems London and Stockholm May 1977
Instrumentation and control for water and wastewater treatment and transport systems: International workshop proceedings. In PROGRESS IN WATER TECHNOLOGY 9(5-6), 71-74.
Coden: PGWTA2 Publ Yr: 1978
illus refs
No abs
Languages ENGLISH
Doc Type CONFERENCE PAPER

Continuous measurement and control of such variables as pH, DO, temperature, conductivity, redox potential, and turbidity have been in use for many years in wastewater treatment plants. Water quality monitoring systems composed of these sensing systems with their associated amplifiers, recorders, alarm circuits, and central data processors are in operation in many countries. Many units are used at the outfall from wastewater and sewage treatment plants for supervision of the neutralization control loop, the effectiveness of the O2 control system of an activated sludge process, or the efficiency of a final clarification stage. Some of the available ion-selective and gas-permeable membrane sensors have immediate application to wastewater and sewage plant control. The nitrate analyzer should be used for determination of nitrate levels before and after denitrification stages. It is preferable to use 1 analyzer with automatic switching of the 2 samples On industrial wastewaters, the F- and cyanide monitors have been used with success. COD measurement has been automated. Because the 0.5-2 hr analysis time is thought too slow for real time control, or because correlation with BOD is considered inadequate, other analyzers are being developed for TOC and total C. (FT)

Descriptors: Monitoring instruments; Wastewater treatment plants; Sewage treatment plants; Water quality; Pollutant analysis
Identifiers: automated control

78-03385
Electrolysis.
Vlahakis, J.; Ouellette, R
Electrotechnology: Vol. 1: Wastewater treatment and separation methods. Edited by R. P. Ouellette, J. A King and P N Cheremisinoff 193-237, Publ.Yr: 1978
Publ Ann Arbor, Mich. Ann Arbor Science Publishers
illus. refs.
No abs.
Languages: ENGLISH
Doc Type: BOOK CHAPTER
The most important industrial applications of electrolysis, a chemical process by which chemical reactions are produced electrically in solutions or molten salts, are metal recovery and electroextraction, electrochemical organic synthesis, and electroconcentration of solids. Among many specific potential applications are the manufacture of propylene oxide from propylene and water, the treatment of acid mine drainage to recover Fe, reducing the COD of cheese whey waste, the recovery of fatty minerals from edible fats, the regeneration of chromated Al deoxidizers, the treatment of domestic wastes, cyanide and organic waste treatment, and electroflotation. Electrolytic processes produce less pollution than many conventional techniques, and also compare favorably, on an economic basis, with them. Electrolysis is energy competitive with other chemical routes for manufacturing chemical compounds and, as environmental standards become more strict, shoud become more popular in metal recovery and waste treatment applications. (FT)
Descriptors: Electrochemistry; Reduction; Oxidation; Metals; Wastewater treatment; Water purification; Organic wastes; Mine drainage; Materials recovery; Chemical wastes; Waste treatment ; Technology
Identifiers: electrolysis

78-03333
Decontamination of water containing chemical warfare agents.
Lindsten, D. C.
US Army Mobility Equipment Research and Development Command, Petroleum/Environmental Technology Div., Ft. Belvoir, VA 22060
AMERICAN WATER WORKS ASSOCIATION. JOURNAL 70(2), 90-92, Coden: JAWWA5 Publ.Yr: Feb 1978
illus. no refs.
Sum.
Languages. ENGLISH
Doc Type. JOURNAL PAPER
The maximum permissible concentrations (MPC) of chemical agents in water serve as thresholds to determine contamination and measure the success of decontamination. The presence of chemical warfare agents in water can be determined by detection kits, by dead fish or other aquatic life, unusual odors from the water, an unusually high Cl demand, or intelligence reports. There is presently no field method for quantitative analysis of agents in water or for detection at any level below the MPC For some agents, detection at the MPC level is not available The standard army ERDLator water purification unit is ineffective when used directly against most chemical warfare (CW) agents. A pretreatment procedure, consisting of superchlorination with 70% calcium hypochlorite to 100 ppm available Cl, followed by a dechlorination with 600 ppm of activated carbon, was developed, and proved effective at removing CW agents to the MPC levels. Safe levels were also achieved by distillation of water contaminated with HN-3 and HD (blister agents), but not with GA, GB, VX (nerve agents), and AC (cyanide). RO was successful for removing only sodium hydrogen arsenate. Waste slurries developed as a result of using army field equipment should be disposed of properly by burial, exposure to weathering processes, or destruction by decontaminating chemicals. (FT)
Descriptors: Contaminant removal; Contaminants; Pollutant detection; Chemical pollutants; Chlorination; Reverse osmosis; Distillation; Wastewater disposal
Identifiers: chemical warfare agents

78-03214
Analysis of cyanides in coke plant wastewater effluents.
Barton, P. J.; Hammer, C. A.; Kennedy, D. C.
Univ. of Missouri, St. Louis, MO 63121
WATER POLLUTION CONTROL FEDERATION. JOURNAL 50(2), 234-239, Coden: JWPFA5 Publ.Yr: Feb. 1978
illus. refs.
Eng., Fr., Ger., Port., Span. abs.
Languages: ENGLISH
Doc Type: JOURNAL PAPER
Experimental results are presented comparing various methods for the analysis of simple and complex cyanide in coke plant wastewaters. Analyses were performed on synthetic solutions containing various combinations of cyanides (CN-), Fe(CN)6-3, and SCN-. Additional analyses were performed on actual coking plant wastewaters with and without standard addition. Simple and complex cyanides in these wastewaters cannot be reliably measured by either the Standard Methods or the ASTM procedures owing to the interference of sulfides produced by the decomposition of thiocyanates during the distillation step. A simple modification is demonstrated to remove sulfide interference by treating the distillate with cadmium carbonate. Additionally, the distillation procedure employing Cu2Cl2 as the catalyst is shown to give consistantly lower results than the magnesium chloride procedure owing to air oxidation of Cu+1 to Cu+2 during distillation. A simple experimental modification is demonstrated which increases the recovery of cyanide when the Cu2Cl2 distillation procedure is employed. (AM)
Descriptors: Wastewater treatment; Effluent treatment; Industrial effluents; Coke; Cyanides; Distillation; Chemical analysis

78-02560

An experience on re-use of waste water discharged from metal plating shop.

Murai, Y.; Yamadera, T.; Koike, Y.
Hitachi Plant Engineering & Construction Co., Water & Waste Water Treatment Div., Tokyo, Japan

International Congress on Desalination Tokyo, Japan Nov. 27-Dec. 3, 1977
Proceedings of the International Congress on Desalination and Water Reuse: Vols. 1 and 2. In DESALINATION 22(1-3), 97-104, Coden. DSLNAH Publ.Yr: Dec. 1977
illus refs.
No abs.
Languages: ENGLISH
Doc Type· CONFERENCE PAPER

Conventional treatment processes for metal plating wastewaters consist of oxidation, reduction, and coagulation-sedimentation for both rinsing water and used bath. Such treatment does not satisfy recent municipal regulations. A new process treats rinse water, containing the bulk of cyanide and Cr wastes, with ion exchangers; acid or alkaline wastewater is treated by chelate resin after coagulation-sedimentation. The treated water can be returned to the shop. The mixed bed exchanger consists of a strongly acid and a weakly basic anion exchange resin after an activated carbon filter, followed by a strongly basic anion exchanger. At the near neutral pH value of the wastewater made possible by this system, complex cyanides are not precipitated nor cyanide gas ·produced; free cyanide which passes the mixed bed exchanger is caught by the strongly basic exchanger. Regeneration water and deteriorated bath are treated with sodium hypochlorite and ferric sulfate. Chromium (III) is treated with other cations with a strongly acid exchange resin; hydrogen chromate and chromate ion are treated with other anions by weakly basic exchange resins. Wastewater containing heavy metals other than cyanide and Cr is treated by coagulation and sedimentation, sand filtration, and chelate resins which adsorb the metals selectively in series. (FT)

Descriptors: Wastewater treatment; Cyanides; Metal finishing industry wastes; Chromium; Heavy metals; Ion exchange; Industrial effluents; Resins

78-02556

An integrated industrial waste water treatment system using electroflotation and reverse osmosis.

Roth, H. P.; Ferguson, P. V.
Swissair Engineering, Metals Technology Section, Zurich, Switz.

International Congress on Desalination Tokyo, Japan Nov. 27-Dec. 3, 1977
Proceedings of the International Congress on Desalination and Water Reuse: Vols. 1 and 2 In DESALINATION 22(1-3), 49-63, Coden: DSLNAH Publ.Yr· Dec. 1977
illus refs
Sum.
Languages ENGLISH
Doc Type: CONFERENCE PAPER

At the Swissair Maintenance and Overhaul Base in Zurich, wastewater and process effluent treatment is centralized except for cyanides and chromate plating wastes detoxification. The central treatment for wastewater consists of clarification stages, neutralization, and sludge treatment performed by electroflotation. Process water treatment, consisting of a desalination stage, is performed by RO, including necessary pre- and posttreatment equipment. In the electroflotation process, electrolytically produced minute gas bubbles which adhere to flocculation particles are used to separate clarified water from the sludge phase. Batch treatment times are 20-30 min. The sludge layer which forms on top of the tank is skimmed pneumatically at regular intervals. In this facility, electroflotation is laid out in 2 independent lines with a capacity of 20 m3/hr each. The outlet stream contains J5 ppm SS. Intermediate treatment consisting of post-alum flocculation followed by multimedia pressure filtration, and pH and scale inhibitor conditioning prepares the stream for RO. Modified cellulose acetate spiral module membranes are used. Design recovery rate is 80% on a capacity of 720 m3/d. Automatic flushing devices control membrane fouling. Average salt rejection rates are 98.4%. Daily plant utilization is 16 hr-13 hr for waste and 3 hr for city water. The city water stream has a beneficial effect on membrane flux performance restoration; the bank flushing system needs to be used only every 4 wk. Permeate posttreatment includes degasification, pH adjustment, and carbon bed filtration. Operational costs of the facility are calculated at about $1.92/1,000 gal. (FT)

Descriptors: Switzerland; Wastewater treatment; Reverse osmosis; Flotation; Desalination; Industrial effluents; Neutralization; Sludge treatment
Identifiers: electroflotation; Swissair; Zurich

78-02439

Cyanide removal from petroleum refinery wastewater using powdered activated carbon.

Huff, J. E.; Bigger, J. M.
IIT Research Inst., Chicago, IL 60606

ILLINOIS INSTITUTE FOR ENVIRONMENTAL QUALITY. IIEQ DOCUMENT Coden: IIDOD2 100 pp. Publ.Yr: June 1977
illus. refs.
Abs.
Languages: ENGLISH
Doc Type: REPORT

A 2-phase program, consisting of batch tests and continuous tests, was conducted to determine the basic chemistry and cyanide removal efficiency of the adsorption and catalytic oxidation of cyanide by powdered activated carbon (PAC) and cupric chloride CuCl2. In the 1st phase, the operating variables of pH, Cu dosage, mode of Cu addition, C dosage, and type of C were investigated. A pH near neutral (pH 6-8.5) was desirable to obtain low equilibrium cyanide in the aqueous phase while maintaining a low Cu level. Cyanide removals K95% were readily achieved in the batch tests using 250 mg/l of powdered carbon and 1.0-1.5 mg/l Cu on solutions containing 0.5 mg/l iron cyanide. The most important factors in cyanide removal were the Cu concentration and C concentration in the solution. Phase II was a series of continuous tests using 2 laboratory-scale activated sludge units and actual refinery wastewater. Both C and Cu were added to the aeration basin, and organic removal and cyanide removal performances were monitored. Cyanide can be successfully removed though the addition of PAC and CuCl2 into an activated sludge unit. The biological efficiency did not indicate any detrimental effects from the Cu addition (with the exception of the first test where the aeration basin was slug-dosed). More C is required than predicted in the batch tests due to the organics competing with cyanide for the active sites on the C. This process requires little or no capital expenditure and should provide many refineries with an economic approach for reducing effluent cyanide concentrations. (AM)

Descriptors: Cyanides; Refineries; Petroleum industry wastes ; Industrial effluents; Wastewater treatment; Pollutant removal; Activated carbon; Copper compounds; Economics
Identifiers: cupric chloride; powdered activated carbon

78-01353

Compounds resistant to carbon absorption in municipal wastewater treatment.

Chow, D. K.; David, M. M.
Weyerhaeuser Co., Tacoma, WA 94801

AMERICAN WATER WORKS ASSOCIATION. JOURNAL 69(10), 555-561
Coden: JAWWA5 Publ Yr: Oct. 1977
illus. numerous refs.
Sum.
Languages: ENGLISH
Doc Type: JOURNAL PAPER

The most important elements in compounds resistant to the carbon adsorption treatment of biological and secondary effluents were Na, N, and Cl. Less abundant elements were C, K, Fe, Ca, Zn, and Mg. Trace quantities of Br, Mn, Au, Sb, and Al were also found. Elements usually considered toxic-Hg, Pb, Cd, and As-were present only in negligible amounts. Organic resistant compounds after initial carbon treatment were F6% of the total organic content in secondary effluent, but W1/2 of these were adsorbed upon recycling. Most organic resistant compounds were small molecules of J240 nm, and included chlorinated hydrocarbon, aliphatic acids and salts, aromatic amines, and phenolic compounds. Major inorganic compounds included Na and Ca chlorides, nitrates, sulfates, and phosphates. The amount of simple cyanides were negligible. Most of the resistant compounds or their characteristics found in this study are in agreement with previous observations and in general are reasonable. The compounds classified should give a better understanding of the resistant compounds and serve as a base for further investigation of their nature. (MS)

Descriptors: Wastewater treatment; Municipal wastes; Absorption; Activated carbon; Heavy metals; Trace elements; Organic compounds
Identifiers: carbon adsorption-resistant compounds

78-01275
Physical-chemical treatment of Cleveland district coke plant waste waters.
Naso, A. C.; John, E. T.
Cleveland District Coke Plant
American Iron & Steel Institute 85th General Meeting. New York, N.Y. May 25, 1977
8 pp Publ.Yr: (1977?)
Publ: (n.p.) *American Iron and Steel Institute*
illus. refs.
No abs.
Languages: ENGLISH
Reduction of organics-principally phenols, free and emulsified oils, SS, and cyanides-has been the major problem in coke plant wastewaters. The sources of this pollution are excess flushing liquor, barometric condenser water from crystal sulfate plants, and intercepting sump water from light oil plants. Typical contaminant loadings and flow rates from the above streams in one of the Republic Steel Corporation's coke plants are tabulated. Discussed are the investigations that culminated in the development of a modular system and the installation and initial operation of the organic and phenol remover, SS and oil removal, and ammonia removal modules of the system. Organic removal techniques revolved around the use of activated carbon and were capable of removing organics below a level of 0.1 mg/l, as phenol. Free and emulsified oils should be removed from the feed waters prior to contact with the activated carbon. Dissolved gas flotation can effectively remove SS and free and emulsified oils only if an anionic polyelectrolyte is added to cause flocculation and a low O2 gas is used for flotation. Caustic soda is best for removing ammonia from crude ammonia liquor, advantages of this system are listed. Two major process modifications were necessary. One involved replacing the barometric condenser with a surface condenser for cooling the vapors from the crystallizer in the ammonium sulfate plate. The other was the termination of light oil refining, thus eliminating the neutral gums and thereby reducing the emulsification problem in the intercepting sump water. The treatment facility was designed to handle 2 streams, one of 220 gpm and one of 440 gpm. Characteristics of these 2 streams are listed. Operational experiences at start-up are discussed and those areas which presented significant problems are outlined. (SS)
Descriptors: Coke; Ammonia; Industrial effluents; Organic wastes; Wastewater treatment; Suspended solids; Contaminant removal; Physicochemical treatment
Identifiers: phenols; Republic Steel Corp.

78-00476
"Oxyphotolysis"-process for effluent contaminants.
Harwood, R. H.
Ventron Technology Ltd.
RECYCLING & WASTE DISPOSAL 2(6-7), 156-157, Coden: RWDIDB Publ.Yr. July-Aug. 1977
illus no refs
Sum
Languages: ENGLISH
A new broad-spectrum effluent treatment process has recently been introduced to the European market This tertiary treatment process is capable of meeting projected discharge limits. Due to the energy input from UV radiation, the available oxidation energy per molecule of ozone (O6) is increased by N35%. The Oxyphotolysis process thus makes more efficient use of the supplied O6. This process was originally developed as a treatment method for metal-complexed cyanide wastes from the electroplating industry. Chlorinated organics are, for the most part destroyed by the process. Organic thiophosphorus pesticides, such as malathion, are also decomposed by the treatment. This process compares favorably with that using ozone alone, in the decolorizing of unbleached kraft mill effluent. Treatment of an effluent stream of 1,000,000 gpd would require a dosage of 5,000 lb/d O6 using O6 alone. With Oxyphotolysis, dosage would be 1,350 lb/d O6. The Oxyphotolysis method is also capable of treating a wide range of chemical contaminants. (from Text)
Descriptors: Effluents; Wastewater treatment; Engineering; Ozonation; Cyanides; Metal finishing industry wastes; Paper industry wastes; Tertiary treatment; Chlorinated hydrocarbon compounds; Pesticides; Photolysis
Identifiers: Oxyphotolysis

77-05373
Removing soluble metals from wastewater.
METZNER, A.V.
Ecodyne Corp., Industrial Waste Treatment Div.
Water & Sewage Works, 124(4): 98-101, Apr. 1977 Publ.Yr: 1977
Languages: ENGLISH
Descriptors: ZINC; CHROMIUM; WASTEWATER TREATMENT; COPPER; TECHNOLOGY; IRON; NICKEL
Identifiers: METAL REMOVAL; CYANIDES

77-03308
Evaluation of the toxic effect of CD-2+ and CD(CN) 4-2- ions on the growth of mixed microbial population of activated sludges.
MOROZZI, G.
Universita Degli Studi di Perugia, Facolta di Science,Istituto di Igiene, Via del Giochetto, 06100 Perugia,Ital.
Science of the Total Environment, 7(2): 131-143, Mar.1977 Publ.Yr: 1977
Languages: ENGLISH
Descriptors: WASTEWATER TREATMENT; MICROORGANISMS; CYANIDES; ACTIVATED SLUDGE; GROWTH; TOXICITY; CADMIUM

77-01457
Wastewater and sludge control in the Canadian metal finishing industry: Segment including chemical, electrolytic treatment; electrochemical machining and polishing; cyanide hardening.
BUFFA, L.
Canada Dept. of the Environment, Environmental Protection Service, Abatement and Compliance Branch, Ottawa Ont.K1A 0H3, Can.
Canada. Water Pollution Control Directorate.Environmental Protection Service Report Series. Economicand Technical Review Report EPS 3-WP-76-10, Dec. 1976.45 pp Publ.Yr: 1976
Languages: ENGLISH
Descriptors: METAL FINISHING INDUSTRY WASTES; ECONOMICS; CANADA; WASTEWATER DISCHARGES; SLUDGES; INDUSTRIAL EFFLUENTS
Identifiers: FISHERIES ACT; CONTROL TECHNOLOGY

77-01344
Detoxification of hardening salts by high pressure steam treatment (the terralysis process).
SALOMONSSON, G.
Terra Bona AB, Drottninggatan 25, 702 10 Oerebro, Sweden
Second International Congress on Industrial Wastewaterand Wastes. Edited by S. H. Jenkins. In Progress in WaterTechnology, 8(2-3): 163-167, 1976 Publ.Yr: 1976
Languages: ENGLISH
Descriptors: WASTEWATER TREATMENT; BARIUM COMPOUNDS; CYANIDES; METAL INDUSTRY WASTES
Identifiers: TERRALYSIS PROCESS; HARDENING SALTS

76-05299
Pollution abatement through the treatment of industrial waste water with ion exchange resins.
WAITZ, W.H., JR.
Rohm and Haas Co., Pollution Control Research Dept., 5000Richmond St., Philadelphia, PA 19137
Institute of Environmental Sciences: 22nd AnnualTechnical Meeting. Mt. Prospect, Ill.: Institute ofEnvironmental Sciences, 1976 pp. 491-495 Publ.Yr: 1976
Languages: ENGLISH
Descriptors: WASTEWATER TREATMENT; RESINS; ECONOMICS; CYANIDES; METALS; BORON; ION EXCHANGE; INDUSTRIAL EFFLUENTS
Identifiers CHROMATES

76-04259
Instrumentation and automatic control of cyanide waste treatment.
DIGGENS, A.
Orion Research, Inc., 380 Putnam Ave., Cambridge, MA02139
Pollution Engineering, 8(3): 43-45, Mar. 1976 Publ.Yr: 1976
Languages ENGLISH
Descriptors: CYANIDES; INDUSTRIAL EFFLUENTS; METAL INDUSTRY WASTES; PH; POLLUTION CONTROL EQUIPMENT; WASTEWATER TREATMENT
Identifiers. METAL PLATING BATHS

72-07743 72-6TF-01173
Plating and cyanide wastes.
SMITH, STUART E.
Environment/One, Schenectady, NY
Water Pollution Control Federation. Wash., D.C. Journal,44(6): 1100 - 1104, June 1972 Publ.Yr: 1972
Languages: ENGLISH
Descriptors: CYANIDE WASTES; METAL FINISHING INDUSTRY; INDUSTRIAL WASTES; WASTEWATER TREATMENT
Identifiers: 1971; LITERATURE REVIEW; METAL PLATING

72-06935 72-5TI-00771
Integrated waste water treatment for reusage after cyanide type plating (3,882,701).
LANCY, LESLIE E.
Ellwood City, PA
Official Gazette. U. S. Patent Office, 901(2):623-624,Aug 8, 1972 Publ.Yr: 1972
Languages: ENGLISH
Descriptors: PATENTS; CYANIDE WASTES; WASTEWATER TREATMENT
Identifiers: ASSIGNOR TO LANCY LABS. INC., ZELIENOPLE, PA

72-02641 72-2TF-00586
Giving cyanide the treatment.
ANONYMOUS,
UNKNOWN
Chemical Week, 110(2): 55, 57, Jan. 12, 1972 Publ.Yr: 1972
Languages: ENGLISH
Descriptors: METAL FINISHING INDUSTRY; WASTEWATER TREATMENT; CYANIDE; TOXIC WASTES
Identifiers: ELECTROPLATING WASTES

71-06822 71-5TF-01068
Elimination of cyanides in the waste waters of the metallurgical industry.
MALAFOSSE, J.
L'Air Liquide, Lyon, Fr.
See Citation No. 71-5TF-1057. 14 pages. 1970 Publ.Yr: 1970
Languages: ENGLISH
Descriptors WASTEWATER TREATMENT; CYANIDE WASTES; METAL INDUSTRY
Identifiers: CN ION OXIDATION

71-05413 71-4TF-00660
New process detoxifies cyanide wastes.
MALIN, H. MARTIN, JR.
Environmental Science and Technology, Wash., DC
Environmental Science and Technology. Wash., D. C.,5(6). 496-497 June 1971 Publ.Yr: 1971
Languages: ENGLISH
Descriptors: CHEMICAL POLLUTANTS; WASTEWATER TREATMENT; CYANIDE WASTES; OXIDATION
Identifiers: E.I. DU PONT DE NEMOURS; KASTONE PROCESS

71-02884 71-2TF-00374
Effects of radiation on municipal and industrial wastewater.
OLESEN, D. E.
Battelle Memorial Inst., Pacific Northwest Lab., Waterand Waste Management Section, Richland, WA
See Citation No. 71-2TF-0373 p. 43. 1968 Publ.Yr: 1968
Languages: ENGLISH
Descriptors: RADIATION; PHENOL; CYANIDE WASTES; PETROLEUM WASTES; MICROORGANISMS; WASTEWATER TREATMENT
Identifiers: ABSTRACT ONLY; RADIATION TREATMENT

70-06807
Removal of organic nitrites from wastewater systems.
LUTIN, PHILIP A.
Hensley-Schmidt, Inc., Chattanooga, TN
See Citation No. P70-06805, pp. 1632-1642, Sept. 1970 Publ.Yr: 1970
Languages: ENGLISH
Descriptors: ACTIVATED SLUDGE; CYANIDE WASTES; OXIDATION; WASTEWATER TREATMENT
Identifiers: ORGANIC NITRITE REMOVAL

82-02050
Treatment of Metal Containing Wastewater With Calcium Sulfide
Kim, B.M
GE Co. Schenectady, NY
AIChE Nat. Mtg. Boston, Portland, Chicago 1980
IN "WATER - 1980 VOL. 77, NO. 209, pp. 39-48, Publ.Yr: 1981
AICHE, 345 EAST 47 ST., NEW YORK, NY 10017
SUMMARY LANGUAGE - ENGLISH
Languages: ENGLISH
Recent promulgation of stringent environmental regulations often requires a process of heavy metals removal more effective than hydroxide precipitation. Sulfide precipitation using calcium sulfide slurry was investigated for cleanup of heavy metals. Methods for preparing and delivering calcium sulfide slurry were developed and several processes using such methods are described. Wastewater samples were treated with these processes and their applicabilities are presented.
Descriptors: wastewater treatment; heavy metals; precipitation; water sampling; sulfur compounds; purification

82-02049
Precipitation of Heavy Metals With Sodium Sulfide: Bench-Scale and Full-Scale Experimental Results
Bhattacharyya, D.; Jumawan, A.B.; Sun, G.; Sund-Hagelberg, C.; Schwitzgebel, K
Dept. Chem. Eng. Univ. KY Lexington, KY 40506
AIChE Nat. Mtg. Boston, Portland, Chicago 1980
IN "WATER - 1980 VOL. 77, NO. 209, pp. 31-38, Publ.Yr: 1981
AICHE, 345 EAST 47 ST., NEW YORK, NY 10017
SUMMARY LANGUAGE - ENGLISH
Languages: ENGLISH
The results of an extensive investigation involving both laboratory-scale and full-scale sulfide precipitation behavior of heavy metals and arsenic are presented. The feasibility of a combination of hydroxide-sulfide precipitation (at pH 8-9) process, and a process involving sulfide precipitation (at pH 3-5) followed by lime precipitation, is established to achieve a high degree of separation of heavy metals and arsenic from smelter wastewaters. For precipitation of arsenic and zinc sulfide at pH < 5, the side reaction between dissolved sulfur dioxide (if present in wastewater) and sulfide must be considered in process design
Descriptors: heavy metals; precipitation; arsenic; sulfur compounds; separation; wastewater; feasibility studies

81-05586
Pretreatment of Sewage for Heavy Metal Removals
Huang, J -C.; McCole, P.M.
Dept Civ. Eng , Univ. MO, Rolla
1980 Nat Conf Environ. Eng New York, N Y. Jul. 8-10, 1980
IN "1980 NAT. CONF. ENVIRON. ENG. Publ.Yr: 1980
ASCE, 345 EAST 47TH ST., NEW YORK, N.Y.
Languages: ENGLISH
The objective of this study was to develop an innovative technology to precipitate and remove toxic metals from municipal wastewater without simultaneously removing the largely organic suspended and settleable solids. To achieve this, an upflow expanded sand bed was used with lime feed to nucleate precipitation of metals, calcium carbonate and calcium hydroxylapatite on the sand grains. This new process could be used for pretreatment of municipal wastewater ahead of conventional treatment to remove heavy metals into a relatively small volume of granular precipitate, thus leaving the primary and secondary wastewater treatment sludges with a lower metals content and making them more suitable for agricultural use.
Descriptors: Municipal; Heavy metals; Toxic materials; Precipitation; Secondary treatment; Wastewater treatment

81-05441
Comparative Metals Precipitation Techniques
Croy, L.P.; Knocke, W.R.
Dept. Civil Eng., VA Polytech. Inst. St Univ., Blacksburg, VA
1980 Nat. Conf. Environ. Eng. New York, N.Y. Jul. 8-10, 1980
IN "1980 NAT. CONF. ENVIRON. ENG. Publ.Yr: 1980
ASCE, 345 EAST 47TH ST., NEW YORK, N.Y.
Languages: ENGLISH
The treatment of metal-laden electroplating wastewaters has been through the use of hydroxide precipitation techniques. This process, somewhat traditional, is relatively inexpensive due to the fact that the main chemical cost relates to the purchase of lime. However, certain problems have developed with this method of treatment: (1) ever-tightening discharge standards have begun to exceed the technological capabilities of hydroxide precipitation; (2) the use of complexing agents in electroplating operation has tended to reduce the efficiency of hydroxide precipitation systems; and (3) the resulting metal hydroxide sludges have been shown to be difficult to thicken and dewater. Thus, it was proposed that alternate precipitation schemes be investigated. Patterson et. al . examined carbonate precipitation of metals and concluded this process offered no significant benefits in excess of those obtained with hydroxide precipitation.
Descriptors: Wastewater treatment; Sludge dewatering; Precipitation; Metals; Economics

81-04025
Filtration for Treating Metal-Finishing Wastes
Yeh, C.H.H.; Ghosh, M.M.
1980 Nat. Conf. Environ Eng. New York, N.Y. Jul. 8-10, 1980
IN "1980 NAT. CONF. ENVIRON. ENG." Publ.Yr: 1980
ASCE, 345 EAST 47TH ST., NEW YORK, N.Y.
Languages: ENGLISH
The treatment and methods for recovering metals from such wastes include chemical precipitation, cementation, electrodeposition, solvent extraction, reverse osmosis, and ion exchange (1). The selection of a method depends on the concentration of metals in the wastewater and the ultimate disposal requirement. In one recovery scheme, the "drag-out" metals in the voluminous rinse water is first concentrated using ion exchange. Then, the concentrated metals in the regeneration back-wash are precipitated and recovered as hydrated oxides. The process water containing carry over metal hydroxide flocs from the settling and dewatering steps is polished by filtration, thereby making the scheme a totally "captive" one. Therefore, filtration using either granular media or precoated septum forms an integral part of this treatment scheme.
Descriptors: Industrial wastewaters; Metal finishing industry; Wastes; Water purification; Filtration

81-04012
Ferrite Process for Treatment of Wastewater Containing Heavy Metals
Iguchi, I.; Kamura, T.; Inoue, M.
Rockwell Internat., Golden, CO Rocky Flats Plant
Publ.Yr: 1980
NTIS, SPRINGFIELD, VA
RFP-Trans-284
Languages: ENGLISH
The ferrite process as a unique process in the field of wastewater treatment technology is introduced, and the stabilization treatment of electrostatic precipitator (EP) ash generated from municipal incinerators using this process is discussed. Information is presented on the properties of ferrites, the distribution and concentration of heavy metals in and the solubility of EP ash, heavy metal leaching, an EP ash treatment device, and the money savings possible by using the ferrite process as compared with other stabilization methods.
Descriptors: Wastewater treatment; Heavy metals; Ash; Incinerators; Leaching; Pollution dispersal

81-03906
Effect of Complex Formation on the Removal of Heavy Metals From Water and Wastewater
Huang, C.P.; Bowers, A.R.
Dept. Civil Eng., Univ. DE, Newark
1980 Nat. Conf. Environ. Eng. New York, N Y. Jul 8-10, 1980
IN "1980 NAT. CONF. ENVIRON. ENG." Publ.Yr 1980
ASCE, 345 EAST 47TH ST., NEW YORK, N.Y.
Languages: ENGLISH
The presence of heavy metals in water and wastewater has been a subject of public concern for several decades. Much has been published on the adverse effect of heavy metals to animals and man. In order to safe-guard public health, it is essential that heavy metals be removed from the aquatic environment. The presence of foreign ions that may modify the chemical equilibrium picture of the metal solution and thereby affect the treatment efficienty has been essentially overlooked. It is too obvious that complex formation can alter the chemical characteristics of the metal ions and affect the removal mechanisms regardless of the treatment process employed. It is therefore the purpose of this study to investigate the effect of complex formation on the removal of heavy metals from water and wastewaters exmplified by chemical precipitation and adsorption processes.
Descriptors: Heavy metals; Water pollutants; Wastewater treatment; Adsorption; Public health; Ions; Precipitation; Aquatic environments

81-03905
Pretreatment of Sewage for Heavy Metal Removals
Huang, J.-C.; McCole, P.M
Univ. MO, Rolla
1980 Nat. Conf. Environ. Eng. New York, N.Y Jul. 8-10, 1980
IN "1980 NAT. CONF. ENVIRON. ENG." Publ.Yr: 1980
ASCE, 345 EAST 47TH ST., NEW YORK, N.Y
Languages: ENGLISH
The objective of this study was to develop an innovative technology to precipitate and remove toxic metals from municipal wastewater without simultaneously removing the largely organic suspended and settleable solids. To achieve this, an upflow expanded sand bed was used with lime feed to nucleate precipitation of metals, calcium carbonate and calcium hydroxylapatite on the sand grains. This new process could be used for pretreatment of municipal wastewater ahead of conventional treatment to remove heavy metals into a relatively small volume of granular precipitate, thus leaving the primary and secondary wastewater treatment sludges with a lower metals content and making them more suitable for agricultural use.
Descriptors: Municipal wastewaters; Heavy metals; Toxic materials; Precipitation; Wastewater treatment; Secondary treatment

81-01797

Foam flotation treatment of industrial wastewaters: Laboratory and pilot scale.

Wilson, D J.; Thackston, E. L.
Vanderbilt Univ., Nashville, TN 37235

U.S. Environmental Protection Agency. Office of Research and Development. Environmental Protection Technology Series
Coden: EPTSBT Publ.Yr: Jun 1980
illus. 90 refs.
Abs (Available from NTIS, Springfield, VA 22161)
Languages: ENGLISH
TREATMENT CODES: D .(DESCRIPTIVE) ; I .(INVESTIGATIVE/OBSERVATION)

A floc foam flotation pilot plant removed Pb and Zn in dilute aqueous solution to quite low concentrations. Design improvements are presented. The floc foam flotation of Zn is readily carried out with aluminum hydroxide (Al(OH)3) and sodium lauryl sulfate (NLS). Chromium hydroxide is floated with NLS, but adsorbing colloid flotation of Cr+3 with ferric hydroxide (Fe(OH)3) or Al(OH)3 yielded better results. Cobalt and Ni levels are reduced to =1 mg/L by flotation with Al(OH)3 and NLS. The Mn+2 levels can be reduced to 1-2 mg/L by flotation with Fe(OH)3 and NLS. Floc foam flotation of Cu was compatible with several precipitation pretreatments (soda ash, lime, Fe(OH)3, and Al(OH)3), although modifications were needed to prevent interference from excessive Ca or CO3-2. Therefore, floc foam flotation can be used as a polishing treatment. The flotation of mixtures of Cu+2, Pb+2, and Zn+2 was conducted using Fe(OH)3 and NLS. The flotation of simple and complexed cyanides and mixtures of metal cyanide complexes was also conducted with Fe(OH)3 and NLS; a pH of =5 is optimum. A surface adsorption model for floc foam flotation was analyzed and accounted for the effects of surfactant concentration, ionic strength, specifically adsorbed ions, and surfactant hydrocarbon chain length. (AM)

Descriptors: Flotation; Industrial wastes; Wastewater treatment; Pilot plants; Engineering; Flocculation; Ions; Surfactants; Iron compounds; Aluminum compounds; Heavy metals; Zinc; Nickel; Manganese; Chromium; Cobalt; Copper; Lead; Chemical treatment; Adsorption

Identifiers: floc foam flotation

81-01795

Sulfide precipitation of heavy metals.

Robinson, A. K ; Sum, J. C.
Boeing Commercial Airplane Co., Manufacturing Research and Development, P.O. Box 3707, Seattle, WA 98124

U.S. Environmental Protection Agency. Office of Research and Development. Environmental Protection Technology Series
Coden: EPTSBT Publ.Yr: Jun 1980
illus. 16 refs.
Abs. (Available from NTIS, Springfield, VA 22161)
Languages: ENGLISH
TREATMENT CODES: I .(INVESTIGATIVE/OBSERVATION) D .(DESCRIPTIVE) ; E (ECONOMIC/COMMERCIAL/MARKET)

The sulfide precipitation of heavy metals from industrial wastewaters was evaluated. Five processes were compared in bench-scale, continuous-flow equipment-conventional lime processing, conventional lime processing plus filtration, lime with a sulfide polishing and filtration, lime with sulfide, and lime with sulfide plus filtration. Wastewater samples from 14 metal working industries were processed through the bench-scale equipment using all 5 processes. Reductions in the concentrations of Cd, Cr, Cu, Ni, and Zn, plus selected other metals, were measured by atomic absorption chemical analysis. Capital and operating costs for the processes were compared for 3 plant sizes-37.85 m3/d (10,000 gpd), 757 m3/d (200,000 gpd), and 1,893 m3/d (500,000 gpd). To reduce the levels of Cd, Cu, Ni, or Zn from a wastewater treatment plant using conventional lime processing, the addition of a final filtration should be considered first. If filtration does not achieve the desired low levels, then a sulfide polishing process with added filtration is recommended. If reduction of the levels of Cr, Pb, Ag, or Sn is required, the conventional lime process plus filtrat n is recommended. The sulfide process did not significantly reduce the levels of these metals. Details are included on the use of a specific ion electrode for the control of sulfide additions. (AM)

Descriptors: Heavy metals; Precipitation; Wastewater treatment; Sulfur compounds; Industrial effluents; Lime; Filtration; Metal industry wastes; Economics; Engineering; Cadmium; Copper; Chromium; Nickel; Zinc; Chemical treatment

Identifiers: sulfite precipitation

81-01778

Water and wastewater reclamation: An economical answer to industrial wastes and pollution.

Mulvihill, J.

Culligan USA, Industrial Water Reclamation, One Culligan Pkwy., Northbrook, IL 60062

Industrial Wastes 26(4), 14-16, Coden: INWABK Publ.Yr: Jul-Aug 1980

illus. no refs.

No abs.

Languages: ENGLISH

Doc Type: JOURNAL PAPER

TREATMENT CODES: C (CASE STUDY) E .(ECONOMIC/COMMERCIAL/MARKET)

Many companies are economically reclaiming and reusing heated process water, cooling water, industrial coolants or lubricants, wash water and detergents, and demineralized water. Systems range from 50 to 3,000 gpm. Examples of water reclamation systems are provided, including a large truck terminal in New Jersey, a 120-room motel, a coal processing plant, a rolling steel mill, a cannery, and a metal conduit manufacturer. Oxidation, precipitation, and coagulation properly coupled with physical processes can produce dramatic and cost effective results. The use of simple self-cleaning screens, cyclone separators, and multimedia and carbon pressure filters can remove contaminants efficiently. Ion exchange, membrane/ultra-filtration, and RO processes are finding more applications in wastewater reclamation systems; these processes make it possible to filter in the submicron range and remove substances classified by molecular weight, without chemical addition, which can cause problems in a reclaim environment. The processes for advanced wastewater treatment gaining the greatest acceptance fall into the physical-chemical treatment category as opposed to biological systems. (FT)

Descriptors: Wastewaters; Water reuse; Economics; Water pollution control; Contaminant removal; Pollution control equipment; Wastewater treatment

81-01768

Removal of heavy metals from wastewaters.

Beszedits, S.; Wei, N. S.

B & L Information Services, P.O. Box 458, Station L, Toronto, Ontario M6E 2W4, Canada

Publ.Yr: 1980

Publ: Toronto, Ontario, Canada B & L Information Services

illus. numerous refs.

No abs. Price: $25.50

Languages. ENGLISH

Doc Type: BOOK

TREATMENT CODES: D .(DESCRIPTIVE) ; A .(APPLICATIONS) ; M .(METHODOLOGICAL) ; C .(CASE STUDY)

A state-of-the-art review describes available methods for the removal, recovery, and disposal of heavy metals, e g., Cd, Cu, Fe, Pb, Hg, Ni, Ag, and Zn. Applications of the methods are illustrated in case studies. Methods discussed include the following: precipitation, coagulation, and complexation; cementation; electrolytic recovery and electrodialysis; solvent extraction; liquid membranes and charged membrane ultrafiltration; RO; ozonation; foam separation; ion exchange; and evaporative recovery. Miscellaneous treatment methods and adsorbents, and ultimate disposal are also discussed. (FP.FT)

Descriptors: Heavy metals; Wastewater treatment; Contaminant removal; Precipitation; Coagulation; Dialysis; Solvent extraction; Books; Membranes; Filtration; Reverse osmosis; Ozonation; Ion exchange; Evaporation; Waste disposal

Identifiers: state-of-the-art

81-01726
Starch xanthate and polycations in heavy metal removal from waste waters.
Tiravanti, G.; Marani, D ; Mezzana, M.; Passino, R.
Consiglio Nazionalle delle Ricerche, via De Blasio 5, 70123 Bari, Italy
ENVIRONMENTAL TECHNOLOGY LETTERS 1(3), 141-150, Publ.Yr: Mar 1980
Illus 19 refs.
Abs.
Languages: ENGLISH
Doc Type: JOURNAL PAPER
TREATMENT CODES: I .(INVESTIGATIVE/OBSERVATION)
Starch xanthate and polycations in heavy metal precipitation were studied. Tests were conducted in 2 ways, the differentiation factor being at what stage the polycation was added. The study on controlled-pH heavy metal ion precipitation showed substantial differences in the costly cationic polyelectrolyte doses required. In the system where starch xanthate is added to the solution containing the polycation and metal-containing solution, an increase in cation equivalents was required for each increase in solution metal concentration, while in the system where starch xanthate was added to the metal-containing solution, followed by the addition of polycation, the total removal of the metal was tied to the xanthate-metal ratio on the basis of equivalents. The second method is highly feasible for the following reasons: metal removal is efficient over a wide pH range; only 1 parameter needs checking for total metal removal; low cationic polyelectrolyte doses are necessary; polyelectrolyte doses are constant even with wide variations of metal concentration; and a metal xanthate precipitate is formed with good settling features, along with a sludge which is easily dewaterable. The process may be exploited using the same plants as those already utilizing traditional precipitation processes by substituting lime or soda for starch xanthate. (FT)
Descriptors: Wastewater treatment; Pollutant removal; Precipitation; Laboratory methods; Heavy metals; Cations
Identifiers: starch xanthate; polyelectrolytes

81-00759
Utilization of waste tin cans in the control of chromium plating wastes.
Quano, E. A. R.; Arellano, F.
Quezon City, Philippines
Second recycling world congress: New and better uses of secondary resources Manila, Philippines Mar 19-22, 1979
National Science Development Board of the Philippines-Asian Recycling Association-Bureau International de la Recuperation-United , Kingdom Society of Chemical Industry-United Kingdom ''Conservation & Recycling''-United Kingdom Institution of Metallurgists-Illinois Institute of Technology-United States Research Institute-United Kingdom Institution of Production Engineers-Clean Japan Center-Japan Waste Management Association-United States Bureau of Mines
CONSERVATION & RECYCLING 3(3-4), 355-359, Coden: CRECD2 Publ.Yr: 1979
Illus. 5 refs.
No abs.
Languages: ENGLISH
Doc Type: JOURNAL PAPER CONFERENCE PAPER
Rusting is an oxidation process that converts Fe from its elemental state to Fe+2 or Fe+3. During oxidation, Fe has potential for reducing substances from their higher oxidation states, e.g., Cr+6. Thus, if the chromic acid solution is passed through a stock of rusting tin cans it will oxidize the Sn and Fe to Sn+2 and Fe+2 oxidation states, and at the same time, the Cr+6 is reduced to Cr+3. The advantages of the procedure over the standard method of SO3-2 or SO2 reduction are listed. A bench-scale model was constructed using various sizes of tin can and different wastewater feeding characteristics to evaluate the effectiveness of the process. The more heavily rusted tin cans are more effective in reducing Cr+6. Generally, a retention time of 12 hr is required to reduce 90% of the Cr+6 to Cr+3, but for purposes of design, a 24-hr retention time is ideal to reduce Cr+6 almost to negligible level. Calcium carbonate is used as a precipitating agent. The chemical cost of conventional Cr treatment processes is twice that of the new process using rusted tin cans based on a 100 m3/d of combined wastewater with 5 ppm SO2 and pH 3.0. (FT)
Descriptors: Waste reuse; Waste management; Materials recovery; Tin; Chromium; Metal finishing industry wastes; Waste treatment; Pollution control; Chemical oxidation; Kinetics; Economics
Identifiers: rusted tin cans; Cr plating wastes

81-00682
Chemically treating wastewater: An update.
Ockershausen, R. W.
Bergenfield, NJ 07621
Water & Sewage Works (Reference issue), R51-R52, R110, Coden: WSWDAC Publ.Yr. Jun 1980
illus. 4 refs.
Sum.
Languages: ENGLISH
Doc Type: JOURNAL PAPER
Many US and Canadian treatment plants use chemical treatment methods to reduce P in plant effluents. Phosphorus is precipitated readily by Al, Fe, and Ca salts resulting in high SS and BOD reductions. Precipitation reactions are given for the various salts. A list of wastewater coagulants, and statistics on P, SS, and BOD reductions using chemical treatment are given for various treatment plants. Polyelectrolyte influence on SS and BOD and points where addition of the coagulants are most effective are discussed. The possibilities for removal of potentially harmful metals by coagulation from drinking water may also be possible. (SS)
Descriptors: Chemical treatment; Wastewater treatment; BOD; Suspended solids; Phosphorus removal; Contaminant removal; Precipitation; Coagulation; Salts; Metals
Identifiers: polyelectrolytes

81-00673
Greenville, Maine-two years later.
Cote, D. R.
Edward C. Jordan Co., Inc., 379 Congress St., Portland, ME 04111
1979 fall meeting of the New England Water Pollution Control Association Portland, Maine Oct 22-24, 1979
New England Water Pollution Control Association
New England Water Pollution Control Association. Journal 14(1), 54-60, Coden: JNEWA6 Publ.Yr: Apr 1980
1 refs.
No abs.
Languages: ENGLISH
Doc Type: JOURNAL PAPER CONFERENCE PAPER
When Greenville, Maine's, advanced wastewater treatment plant could no longer meet its discharge permit limitations, land application was selected as the method of waste disposal. Effluent from 3 treatment lagoons is pumped to one of two 16-million gal storage lagoons, which allow for storage during the winter months. Spray irrigation to the 160-acre site takes place during May to Nov. Based on the design flow of 0.17 mgd and a maximum application rate of 1.33 in/wk, =70 acres of land are required to handle the waste flow. An additional 7 acres are required to handle precipitation which falls on the lagoons. Effluent is delivered to the irrigation system by three 50-hp centrifugal pumps. To monitor groundwater quality, monitoring wells are sampled before and during the spraying season and laboratory analyses are conducted for pH, NO3-, NO2-, total Kjeldahl N, total PO4-3, Cl-, specific conductivity, TOC, COD, TDS, and heavy metals. Results after 1 spray season indicate a slight lowering of groundwater pH, a very slight increase in PO4-3, and a small increase in NO3-. Operational problems during the 1st year have been minimal. (FT)
Descriptors: Land application; Wastewater treatment; Engineering; Biological treatment; Wastewater disposal; Irrigation; Maine; Water pollution control
Identifiers: Greenville

81-00665
Wastewater treatment plant works overtime.
Fritch, G. H.
Howard R. Green Co., Green Engineering Bldg., Cedar Rapids, IA 52401
Water and Wastes Engineering 17(9), 70-73, Coden: WWAEA2 Publ.Yr: Sep 1980
illus. no refs.
No abs.
Languages: ENGLISH
Doc Type: JOURNAL PAPER
The Amana, Iowa, wastewater treatment plant, operated and maintained by Amana Refrigeration, Inc. (which contributes >80% of the design loading), is described. The plant's industrial wastes-containing a high concentration of heavy metals-and its domestic wastes are segregated, with the latter transported through gravity collector sewers to a pumping station where it is ground before being sent to a flow equalization tank. A concrete splitter box divides the flow equally to 2 aeration basins. Aerobic digestion is accomplished using a center flow mounted mixing system; treated effluent is disinfected by chlorination. The system has a hydraulic capacity of 300,000 gpd and an organic capacity of 510 lb of BOD5/d. The segregated waste streams are pretreated separately. An unusual filtering system then removes metal hydroxides without prior clarification. The waste streams are segregated into 2 categories-Cr+6 wastes and acid-alkali wastes. Hexavalent chromium is reduced to Cr+3 with sodium bisulfite under acidic conditions, blended with the acid-alkali waste, and neutralized to precipitate insoluble metal hydroxides. Ferrous sulfate agglomerates the gelatinous waste, which is filtered through PVC filter tubes. (FT)
Descriptors: Wastewater treatment plants; Industrial wastes; Aerobic process; Iowa; Engineering; Biological treatment; Heavy metals; Domestic wastes; Wastewater treatment
Identifiers: Middle Amana; Amana Refrigeration, Inc.

81-00648
A design study of biochemical combined wastewater treatment plant.
Rantala, P.
National Board of Waters, Tampere Water District, Box 297, SF-33101 Tampere 10, Finland
Workshop on treatment of domestic and industrial wastewaters in large plants Vienna, Austria Sep 3-7, 1979
International Association on Water Pollution Research
Progress in Water Technology 12(3), 271-278, Coden: PGWTA2 Publ.Yr: 1980
illus. no refs.
Abs.
Languages: ENGLISH
Doc Type: JOURNAL PAPER CONFERENCE PAPER
The design study for upgrading the existing chemical wastewater treatment plant in the city of Tampere (Finland) was conducted in 1975-78. Various process modifications, e.g., trickling filters and activated sludge combined with chemical precipitation, were studied. Almost 1/2 of the wastewater flow originates from industry-textile, metal, and paper board mill. Simultaneous ferrous precipitation process was the most satisfactory treatment method. Laboratory scale studies showed that paper board mill effluent can easily be treated together with the municipal wastewater. The paper board mill wastewater apparently has some good characteristics in combined treatment. Pilot scale and laboratory scale studies are also presented. (FT AM)
Descriptors: Precipitation; Wastewater treatment plants; Engineering; Chemical treatment; Finland; Industrial wastes; Paper industry wastes; Metal industry wastes; Textile industry wastes
Identifiers: Tampere

81-00577
A glittering future foreseen for the Canadian mining industry.
Bhagat, T.
Water & Pollution Control, 1450 Don Mills Rd., Don Mills, Ontario M3B 2X7, Canada
WATER AND POLLUTION CONTROL 118(5), 11-12, Coden: WPCOAR Publ.Yr: May 1980
illus. no refs.
No abs.
Languages: ENGLISH
Doc Type: JOURNAL PAPER
The $12 billion/yr Canadian mining industry has undertaken a multi-billion dollar development program of new mines, expansions, and re-openings. Hundreds of millions of dollars are also being spent on smelter construction, plant improvements, and environmental control. An estimated $450-$550 million was spent on environmental control and improvement between 1971 and 1975. Treatment techniques available for removal of heavy metals from mine and mill wastewaters include precipitation, cementation, ion exchange, charged membrane ultrafiltration, and ozonation. Other methods used to remove heavy metals contaminants from mill process waters include solvent extraction, activated carbon, synthetic polymeric adsorbents, and electrodialysis. Should recovery of the heavy metals from the resultant sludges not be a cost-effective alternative, the sludges must ultimately be disposed of at an environmentally safe site. Case histories are presented which show how some members of the Canadian mining industry are meeting pollution control problems at mining operations. The projects each required a significant capital commitment and are positive contributions to improved environmental quality. (FT)
Descriptors: Canada; Mining; Pollution control; Environmental protection; Wastewater treatment; Heavy metals; Contaminant removal; Lime; Mine drainage; Acidic wastes
Identifiers: Brunswick Mining and Smelting Corp. Ltd.; Hudson Bay Mining and Smelting Co. Ltd.

81-00483
Removal of pollutants in the overland flow (grass filtration) system.
Scott, T. M.; Fulton, P. M.
Melbourne and Metropolitan Board of Works Farm, Werribee, Victoria, Australia
Developments in land methods of wastewater treatment and utilisation Melbourne, Australia Oct 23-27, 1978
International Association on Water Pollution Research-Australian National Committee of the International Association on Water Pollution Research-Australian Water and Wastewater Association-International Association of Hydraulic Research-Melbourne and Metropolitan Board of Works-University of Melbourne-Commonwealth Scientific and Industrial Research Organisation
PROGRESS IN WATER TECHNOLOGY 11(4-5), 301-313, Coden: PGWTA2 Publ.Yr: 1979
illus. refs.
Abs.
Languages: ENGLISH
Doc Type: JOURNAL PAPER CONFERENCE PAPER
In the overland flow system at Melbourne, Australia, the sewage is given primary sedimentation and passed to irrigation areas. A design hydraulic loading on the system of 0.23 ML/ha/d can be achieved with corresponding BOD5 and SS loadings of 90 and 40 kg/ha/d, respectively. Both BOD and TOC decayed in exponential form from mean levels of 507 mg/L and 350 mg/L to 24 mg/L and 65 mg/L, respectively, with TOC approaching a non-decaying residual of 56 mg/L. Suspended solids reduction was of an exponential nature with a residual of 22 mg/L. Methylene Blue Active Substances showed a similar decay to levels <1 mg/L. The removal of N was complex and to some extent unexplained. The main N losses could be attributed to plant uptake and stripping of NH3 from the wastewater. Organic N loss followed a linear regression. Small amounts of NO3- appeared late in the system. The overall reduction in N concentration was 30%. Little P removal was evident, with the system exhibiting an apparent increase and then a decrease to about the original level. Precipitation of heavy metals as sulfides in the anaerobic section of the system was rapid and generally linear with very small residuals of unknown organic complexes. The overland flow system is effective in the removal of BOD5, SS, and heavy metals but only moderately efficient in the removal of nutrients. (AM)
Descriptors: Pollutant removal; Wastewater treatment; Land application; Grasses; Nitrogen; Phosphorus; Uptake; Filtration; Nutrients; BOD; TOC; Suspended solids
Identifiers: overland flow; grass filtration

80-08496
Methods and costs of preventing cadmium emissions.
Rauhut, A.
Landesgewerbeanstalt Bayern, Nuremberg, Federal Republic of Germany
COMMISSION OF THE EUROPEAN COMMUNITIES. PUBLICATION Coden: 25NQAA Publ.Yr: 1980
illus refs.
Sum.
Languages: ENGLISH
Conventional methods for reducing Cd concentrations in wastewater involve neutralization processes using hydroxides or carbonates followed by separation of the solids by gravity *sedimentation or filtration. On a smaller scale, sulfide* precipitation, ion exchange and neutralization precipitation, RO, ion flotation, liquid-liquid extraction, electrolysis, and cementation processes can be used. Electrostatic and cloth filters and wet scrubbing devices find application in removal of airborne Cd. To reduce the Cd in dumps, the proportion of Cd in the refuse must be reduced, the amount of refuse must be reduced, or Cd-containing products must be produced. Studies conducted by the Bavarian Industrial Institute have assessed the efficiency of neutralization and carbonate precipitation techniques in pure solutions and in effluent samples from an electroplating works. Costs for reducing Cd emissions in water and air are also presented. (FT.MS)
Descriptors: Cadmium; Heavy metals; Economics; Air pollution control; Water pollution control; Sedimentation; Filters; Filtration; Precipitation; Ion exchange; Electrochemistry; Scrubbers; Pollution control equipment; Sulfur compounds
Identifiers: carbonates; hydroxides

80-08403

Toxic control-the trend of the future.

Foess, G. W.; Ericson, W. A.
CH2M HILL, 2929 N. Mayfair Rd., Milwaukee, WI 53222

WATER AND WASTES ENGINEERING 17(2), 21-27, Coden: WWAEA2 Publ.Yr: Feb 1980
illus. refs.
No abs.
Languages: ENGLISH
Doc Type: JOURNAL PAPER

Federal regulations have been promulgated to control the quantity of toxics that can be discharged to the public sewers by industry and the quantity that can be released by publicly owned treatment works (POTW) to the air, land, and aqueous environment. On June 26, 1978, EPA published its regulatory program governing industrial discharges into POTW. EPA published water quality criteria for the 65 priority toxic pollutants in 1979. On Sept. 13, 1979, EPA published criteria for acceptable solid waste disposal, including the disposal and utilization of wastewater treatment plant sludge. Air emissions of toxics from POTWs are governed by OSHA air quality standards and by applicable requirements developed for state implementation plans under the Clean Air Act. Virtually all municipal wastewaters contain most of the priority pollutant metals and some of the organics. Investigations of the performance and removal mechanisms of unit processes with respect to toxics have been performed. Unit processes discussed include primary sedimentation, activated sludge, chemical oxidation, chemical precipitation and coagulation, activated carbon adsorption, chelation, ion exchange, RO, incineration, and wet-air oxidation. (FT)

Descriptors: Wastewater treatment; Toxic materials; Legislation; Incineration; Sedimentation; Activated sludge; Oxidation; Chelation; Precipitation; Coagulation; Activated carbon; Ion exchange; Industrial effluents; Sludge disposal; Pollutant removal; Reverse osmosis; Water quality acts; Federal regulations

Identifiers: Clean Water Act

80-07627

Experience with riverbank filtration along the Rhine River.

Sontheimer, H.
Univ. of Karlsruhe, Engler-Bunte Inst., D-7500 Karlsruhe, Federal Republic of Germany

AMERICAN WATER WORKS ASSOCIATION. JOURNAL 72(7), 386-390, Coden: JAWWA5 Publ.Yr: Jul 1980
illus. refs.
Abs.
Languages: ENGLISH
Doc Type: JOURNAL PAPER

A comparison of dissolved organic chlorine (DOC) and COD values found in the Rhine and in bank-filtered water shows a substantial reduction in the overall organic content of the bank-filtered water. There is a nearly constant removal of ≈10 mg/L COD and 3.5 mg/L DOC, and removal is apparently independent of the river water quality. Heavy metals can be removed in the ground by precipitation. While aerobic conditions in the ground are of special advantage, biological oxidation of organics also occurs under anoxic conditions if NO_3^- is present. However, organochlorine compounds are difficult to remove in the ground if their Cl content is excessively high. Other treatment steps have to be used before or after ground filtration to remove nonbiodegradable organics or to alter them into biodegradable ones. Along the Rhine River, bank filtration generally removes 75% of the dissolved organics, and it is only as a result of bank filtration that later treatment steps insure a high quality drinking water. For this reason, all water utilities in Germany that rely on surface supplies use ground filtration in one way or another as part of their treatment scheme. (FT)

Descriptors: Filtration; Rivers; Water treatment; Rhine River; Contaminant removal; Potable waters; Pollution control; Fresh waters; Federal Republic of Germany; Water reuse; Organic compounds; COD; Organochlorine compounds; Wastewater treatment

Identifiers: riverbank filtration

80-07458

Movement of heavy metals into a shallow aquifer by leakage from sewage oxidation ponds.

Nissenbaum, A.; Wolfberg, A.; Kahanovich, Y.; Avron, M.
Weizmann Inst. of Science, Isotope Dept., Rhovot, Israel

WATER RESEARCH 14(6), 675-679, Coden: WATRAG Publ.Yr: 1980
illus. refs.
Abs.
Languages. ENGLISH
Doc Type: JOURNAL PAPER

The concentrations of Mn, Ni, Cu, Cd, and Cr were measured in a shallow perched groundwater aquifer which underlies the Dan Region Sewage Reclamation Project (Israel). The contribution of effluents to the groundwaters has been evaluated on the basis of Cl- concentration. Groundwater containing >60% effluents showed a 100-fold decrease in Cu and Mn 650 m away from the ponds, as compared with the near ponds samples. Nickel and Cd showed only a small decrease in concentration over 150 m, and then stayed constant. The concentrations of Cu and particularly of Mn in the groundwaters near the oxidation ponds is equivalent to or greater than in the ponds themselves. Copper and Mn are mobilized from the precipitated sludge into the interstitial waters. They percolate into the groundwater near the ponds and then are precipitated by increasing aeration during the movement of the water away from the pond area. Cadmium and Ni form stable soluble organic chelates which are only slightly removed by interaction with the sandy soil of the aquifer. (AM)

Descriptors: Groundwater; Aquifers; Israel; Effluents; Heavy metals; Wastewater treatment plants; Sewage; Lagoons; Activated sludge process; Manganese; Nickel; Copper; Cadmium; Chromium; Chlorine compounds
Identifiers: Dan Region Sewage Reclamation Project

80-06157

Treatment of dilute metal effluents in an electrolytic precipitator.

Bryson, A. W.; Dardis, K. A.
Univ. of the Witwatersrand, Dept. of Chemical Eng., Jan Smuts Ave., Johannesburg 2001, South Africa

WATER S. A 6(2), 85-87, Coden: WASADV Publ.Yr. Apr 1980
illus. refs.
Abs.
Languages: ENGLISH
Doc Type: JOURNAL PAPER

Excessive concentrations of metals in industrial effluents may adversely affect the performance of sewage purification works. Although there is existing technology for treating these effluents, it has not found wide application due to costly equipment and chemicals and the absence of sufficient space on most plants. The feasibility of removing these metals from dilute solutions by electrolytic precipitation using a particulate electrode is investigated A test plant was constructed which was compact, did not require the addition of chemicals and could be operated by unskilled personnel. The plant was installed at an electroplating works on the Witwatersrand and was successful in treating wash waters containing Cu, Ni, Cr, and Zn. (AM)

Descriptors: Heavy metals; Electric collectors; Industrial effluents; Wastewater treatment; Nickel; Nickel; Chromium; Copper; Zinc; Engineering; South Africa; Sewage treatment; Feasibility studies
Identifiers: Johannesburg; electrolytic precipitator

80-06116

Bench-scale testing for residual waste treatment.

Vuceta, J.; Anderson, J. R.; TeKippe, R. J.; Calkins, R. J ; Bishop, W. J.
James M. Montgomery Consulting Engineers, Inc., 555 E. Walnut St., Pasadena, CA 91101

50th annual conference of the Water Pollution Control Federation Philadelphia, Pennsylvania Oct 2-7, 1977
Water Pollution Control Federation
WATER POLLUTION CONTROL FEDERATION. JOURNAL 51(10), 2366-2383, Coden: JWPFA5 Publ.Yr: Oct 1979
illus. refs.
Eng., Fr., Ger., Port., Span. abs.
Languages: ENGLISH
Doc Type: JOURNAL PAPER CONFERENCE PAPER

The most effective technologies for centralized treatment of various industrial residual wastes generated in Ventura County, California, were determined. Steps required for a successful treatment of metallic wastes include cyanide and cyanate oxidation, Cr (VI) reduction, hydroxide and sulfide precipitation, coagulation and flocculation, and filtration. Ion exchange and carbon sorption are not usually required. Coagulation and flocculation of nonmetallic toxic wastes, followed by filtration and carbon sorption, is more effective in the removal of toxic nonmetallic substances from wastewaters than foam fractionation coupled with carbon sorption. A batch mode of operation is superior to continuous flow. (AM)

Descriptors: Waste treatment; Filtration; Heavy metals; Coagulation; Flocculation; Industrial wastes; Wastewater treatment; Cyanides; California; Oxidation; Precipitation; Toxic materials
Identifiers. bench-scale testing; Ventura County

80-04673
Hydroxide/modified sulfide precipitation system removes heavy metals from effluent.
Rogers, K. W ; Wojtkiewicz, J. R.; Maris, J.
Chemical and Environmental Services
CHEMICAL PROCESSING. CHICAGO 42(10), 32-34, Coden: CHPCAI Publ.Yr: Sep 1979
illus. no refs.
No abs.
Languages: ENGLISH
Doc Type. JOURNAL PAPER
A modified method of sulfide treatment, where the sulfide ion concentration is easily and inexpensively controlled so that the feed matches the sulfide demand of the wastewater, is presented. The formation of colloidal precipitates is avoided in this treatment for heavy metals in effluent waters. The modified sulfide process uses an insoluble sulfide salt, and is used in conjunction with standard hydroxide precipitation. The system functions automatically and requires very little chemical attention. The cost runs =$2.44/1,000 gal of wastewater. The system has met EPA requirements, saved water, reduced the hydraulic load on the municipal system, avoided municipal user charges, and protected the environment. (FT)
Descriptors: Heavy metals; Pollutant removal; Effluents; Wastewater treatment; Sulfur compounds; Precipitation
Identifiers: hydroxide/sulfide treatment

80-03590
Sludge application: Remove heavy metals two ways.
Lewandowski, G. A.; Abd-El-Bary, M. F.
New Jersey Inst. of Technology, Newark, NJ 07102
WATER & SEWAGE WORKS 127(1), 44-45, Coden: WSWOAC Publ.Yr: Jan 1980
illus. refs.
No abs
Languages. ENGLISH
Doc Type: JOURNAL PAPER
To develop agricultural use of municipal sludge as a means of disposal, methods of removing heavy metals from the sludge were investigated. Heavy metals can be eliminated from sludge at the municipal treatment plant by physicochemical means, following the primary settler, or treating the combined sludge prior to digestion. Heavy metals can also be removed at their source by activated carbon adsorption, adsorption on clay, ion exchange, cementation, or electrolysis. The most commonly used technique is chemical precipitation as an hydroxide, carbonate, or sulfide The sequence for heavy metal precipitation generally involves equalization, precipitation, clarification, filtration, and land disposal of the filtered sludge or metals recovery. Since the volume of wastewater is much smaller at the source than at a receiving municipal treatment plant, capital and operating costs for heavy metals removal are less at the source in most cases. The potential for metals recovery and reuse should be higher at the source of waste generation, and as disposal costs rise, recovery may become much more attractive. (FT)
Descriptors: Land application; Sludge disposal; Heavy metals ; Pollutant removal; Physicochemical treatment; Activated carbon; Adsorption; Precipitation; Economics
Identifiers: metals recovery

80-02682
Management of radionuclides from reprocessing plant gaseous effluents.
Zabaluev, Y. V.
IAEA, Div. of Nuclear Safety and Environmental Protection, Waste Management Section, Kaerntner Ring 11, P.O Box 590, 1011 Vienna, Austria
INTERNATIONAL ATOMIC ENERGY AGENCY. BULLETIN 21(1), 23-31 , Coden: IAEBAB Publ.Yr: Feb 1979
illus. refs.
ISSN: 0020-6067
No abs.
Languages: ENGLISH
Doc Type: JOURNAL PAPER
TREATMENT CODES: D .(DESCRIPTIVE) ; M .(METHODOLOGICAL)
Although current practice at reprocessing plants is to discharge most of the gaseous radionuclides into the environment, methods exist for removing the nuclides from the gas stream prior to discharge. Proposed processes for 85Kr removal involve cyrogenic distillation, fluorocarbon absorption, adsorption, diffusion, and selective membrane processes. Liquid scrubbing and sorption on solid materials are 2 alternative methods for trapping 129I from off-gases. Options developed for tritium recovery include volatilization and collection prior to dissolution, isotropic enrichment and collection from liquid effluents, and aqueous recycle with removal and solidfication of a small side stream. For storage, 85Kr should be encapsulated, preferably embedded in a metal matrix while 129I may be held in precipitates from scrubbing liquids, in Ag molecular sieves and other solid absorbents, or in charcoal filters impregnated with doping agents. Wastewater containing tritium may be stored in sealed containers prior to disposal, while more concentrated forms of tritium should be immobilized in a durable solid. (FT)
Descriptors: Radioactive wastes; Waste management; Krypton; Iodine; Radioisotopes; Waste disposal; Nuclear fuels; Radioactive effluents; Gaseous wastes; Hydrogen
Identifiers: fuel reprocessing plants; Kr-85; I-129; removal processes; tritium

80-01928
Methods for neutralizing toxic electroplating rinsewater-part 3.
Marin, S.; Trattner, R. B.; Cheremisinoff, P. N.
New Jersey Inst. of Technology, Newark, NJ 07102
INDUSTRIAL WASTES 25(5), 22-23, Coden: INWABK
Publ Yr: Sep-Oct 1979
refs.
ISSN. 0537-5525
No abs.
Languages: ENGLISH
Doc Type: JOURNAL PAPER
TREATMENT CODES: M .(METHODOLOGICAL) ; D .(DESCRIPTIVE)

In the removal of Cr from electroplating rinsewater, the treatment is intended to convert Cr+6 to Cr+3, and then to precipitate it as the insoluble hydroxide. The reduction is performed with sodium bisulfite (NaHSO3) at a pH of 2.0, with the precipitation occurring at pH 8.5, using caustic for the pH adjustment. A pH recorder-controller is used to measure the pH and add the NaHSO3 under automatic oxidation-reduction potential (ORP) control. When the ORP indicates a value of 300 mV, the chromates are reduced, and the addition is stopped. After 15 min of mixing, the pH is adjusted to 8.5, and after =15 min of additional stirring, the precipitated hydroxides are allowed to settle. In the removal of cyanide and alkali wastes, the cyanides are 1st converted to cyanates with a 15% solution of sodium hypochlorite (NaOCl) at a pH >10, and are then oxidized to N and CO2 with the NaOCl solution at pH 8.5. When the ORP reaches a range of 350-400 mV (indicating that all cyanides have been oxidized) the wastewater changes from a clear, transparent green to sky blue. Complete oxidation takes =10 min. The treated water is allowed to settle for =2 hr, during which time small amounts of metals, e g., Cu and Ag, will be precipitated as insoluble hydroxides (FT)

Descriptors. Industrial wastes; Wastewater treatment; Chromium; Cyanides; Precipitation; Chemical oxidation; Reduction; pH; Metals; Toxic materials

Identifiers: electroplating rinsewaters; automated control; sodium bisulfite; sodium hypochlorite; hydroxides

80-01866
Methods for neutralizing toxic electroplating rinsewater-part 1.
Marin, S.; Trattner, R B ; Cheremisinoff, P. N.; Perna, A. J.
New Jersey Inst. of Technology, Newark, NJ 07102
INDUSTRIAL WASTES 25(3), 50-52, Coden: INWABK
Publ.Yr. May-Jun 1979
illus. no refs
ISSN 0537-5525
No abs.
Languages ENGLISH
Doc Type. JOURNAL PAPER
TREATMENT CODES: M .(METHODOLOGICAL) ; A .(APPLICATIONS) ; D (DESCRIPTIVE)

Rinsewaters from the electroplating process contain high concentrations of cyanides and chromates. To comply with US EPA discharge standards several chemical processes have been developed to destroy the cyanides and chromates. For cyanide the most common form of treatment is alkaline chlorination oxidation by sodium hypochlorite or Cl2 plus sodium hydroxide addition to the waste. Electrolytic decomposition and ozonation are also effective treatments for cyanide wastes. Chromium waste treatment involves reduction and precipitation processes. Reducing agents include ferrous sulfate, sodium bisulfate, and sulfur dioxide; neutralizing compounds include lime slurry or caustic. Batch treatment is necessary in shops having a total daily flow <30,000 gpd, whereas continuous treatment is recommended for volumes >30,000 gpd. (FT)

Descriptors: Metal finishing industry wastes; Cyanides; Chromium compounds; Wastewater treatment; Contaminant removal; Chemical oxidation; Neutralization; Reduction

Identifiers: electroplating

80-01825

Plant variables determine phosphorus removal methods.

King, P. H ; Hazelwood, R. D.; Tilley, A. R.; Randall, C. W.
Virginia Polytechnic Inst. and State Univ., Dept. of Civil Eng., Blacksburg, VA 24061

WATER & SEWAGE WORKS Reference Number, R-82-R-86, Coden: WSWOAC Publ.Yr. 1979
illus. refs.
ISSN: 0043-1125

No abs.

Languages: ENGLISH

Doc Type: JOURNAL PAPER

TREATMENT CODES: D .(DESCRIPTIVE) ; M .(METHODOLOGICAL)

Chemical precipitation methods utilizing lime and alum metallic salts added prior to primary sedimentation and as add-on tertiary treatment with mixing and sedimentation are discussed. The primary and tertiary sludges were generated after conventional treatment processes and collected after secondary clarification but before chlorination. Lime and alum were added to separate samples and mixed for 20 and 30 min, respectively. The mixture was allowed to settle 1 hr before analysis. Phosphorus content was determined by the vanadomolybdophosphoric acid colorimetric method and total solids by gravimetric analysis. Sludge dewatering properties were determined by the Buchner funnel specific resistance test and by gravity drainage in sand drying beds. Primary sludges had greater dewatering properties than tertiary sludges, and alum sludges, whether primary or tertiary, were more difficult to dewater than lime sludges. Optimum mixing time for alum sludge was 1.5 min, while for primary lime sludge, resistance decreased over a range of mixing times. In tertiary systems, alum sludge mixing time was optimum after 15 sec, but mixing time had little effect on lime sludges. Polymer treatment generally accelerated the gravity drainage phase of sand-bed dewatering, while air drying rates were unaffected by the polymer. (FT)

Descriptors: Chemical treatment; Precipitation; Wastewater treatment; Sludge dewatering; Aluminum compounds; Lime; Polymers; Phosphorus removal

80-00418

RMA-a waste water treatment system for electro-plating operations.

Anonymous

DORNIER POST No. 2, 31-33, Coden: DOPOAC Publ.Yr: 1979
illus. no refs.
ISSN: 0012-5563

No abs.

Languages. ENGLISH

Doc Type: JOURNAL PAPER

Dornier has developed a cost-effective system for recycling metals from wastewater which brings wastewater treatment and metal recycling within the reach of medium and small electroplating operations. Metals are recycled using high quantities of wastewater treated by precipitating only metallic ions or both kinds of ions, depending on the needs of the operation. Loaded resins are not regenerated in the electroplating operation but are collected by an operating company and exchanged for regenerated resins, thereby eliminating the need to regenerate ion exchanger resins and to treat the eluates in a detoxication plant. The essential system component is the modular ion exchanger column with easily replaced cartridges regenerated in a central installation when they are charged. The cartridges are easy to handle and do not require special training for monitoring and operation. The system can be used for automatic water recycling systems, maintenance of process baths, pre- and after-treatment baths, separate treatment of rinse baths for metal recovery, and elimination of toxic metals or complex-forming agents. The Dornier-developed system offers the following advantages: modular conception, small dimensions, low cost, easy handling and high operational safety, and maintenance of prescribed wastewater quality. (SS.FT)

Descriptors: Wastewater treatment; Economics; Metals; Recycling; Ion exchange; Precipitation; Metal industry; Technology

Identifiers: electroplating operations; modular ion exchanger column

79-04165

Heavy metal removal with completely mixed anaerobic filter.

DeWalle, F B.; Chian, S. K.; Brush, J.
Univ. of Washington, Dept. of Environmental Health, Seattle, WA 98105

WATER POLLUTION CONTROL FEDERATION. JOURNAL 51(1), 22-36,
Coden. JWPFA5 Publ.Yr: Jan. 1979
illus. refs.
Eng., Fr., Ger., Port., Span. abs.
Languages: ENGLISH
Doc Type· JOURNAL PAPER

A completely mixed anaerobic filter was subjected to various leachate loadings. At each detention time samples were taken from the influent, effluent, and other sampling ports for AAS heavy metal analysis. The filter was effective in removing heavy metals, the effectiveness increasing with increasing metal concentrations in the effluent. The metals were precipitated as sulfides, carbonates, and hydroxides and were removed from the filter as a slurry. With decreasing hydraulic detention time the metal removal percentage decreased while the metal content in the bottom slurry increased. Most metals were removed in the lower portion of the filter. Copper was associated with the largest solids particles, but also showed the largest variation in concentrations and largest decrease in removal efficiency at decreasing hydraulic detention times. (AM)

Descriptors: Copper; Zinc; Nickel; Chromium; Filters; Anaerobic systems; Heavy metals; Wastewater treatment
Identifiers: metal removal

79-04160

Influence of pH on purification of zinc-containing solutions by electrocoagulations.

Zhurnal Prikladnoi Khimii, 51(6).1235-1239, June 1978

Gnusin, N P.; Vitul'skaya, N. V.; Zabolotskaya, L. I.; et al.
Kuban' State Univ., Ultisa Sedina 4, Krasnodar Kraevoj, USSR

JOURNAL OF APPLIED CHEMISTRY OF THE U.S.S.R 51(6), 1187-1189, Coden: JAPUAW Publ.Yr: 1978
illus. refs. (Some in Russ.)
No abs.
Languages: ENGLISH
Doc Type: JOURNAL PAPER

The effectiveness of electrocoagulation is determined by the product of the anodic current efficiency, and the coefficient K, which is a measure of the tendency of Zn ions to coprecipitation with iron hydroxide. An investigation is reported which was made to determine the quantitative dependence of these 2 quantities on the solution pH. Experiments were conducted in a model galvanizing electrolyte containing 200 g/L of zinc sulfate, 30 g/L of sodium sulfate, and 30 g/L of aluminum sulfate diluted with distilled water to a Zn-ion concentration of 40 mg/L. The solution pH was varied from 3 to 7 by adding either hydrochloric acid or caustic soda. Experiments were performed at various current densities and flowrates. The current efficiency was determined from the amount of Fe dissolved, and the coefficient K from the ratio of Zn:Fe concentrations in the precipitate. The investigations at various initial pH values indicated that the current efficiency depends on both the quantity of electricity/unit volume, and on the solution pH, but that the coprecipitation of the 2 metals is independent of the pH. (FT)

Descriptors: Coagulation; Precipitation; Zinc; Iron; pH; Electrochemistry; Wastewater treatment
Identifiers: electrocoagulation

79-03145

Treatmente of base metal mine drainage at pilot scale.

Huck, P. M.; LeClair, B. P.

CANADA. ENVIRONMENTAL PROTECTION SERVICE REPORT SERIES. TECHNOLOGY DEVELOPMENT REPORT Coden. TDRSDY 94 pp Publ.Yr. July 1978
illus. refs.
Eng., Fr. abs.
Languages: ENGLISH
Doc Type: JOURNAL PAPER

The suitability of conventional precipitation and sedimentation techniques to remove Pb, Zn, Cu and Fe from various types of acid mine drainage in Northeastern New Brunswick was investigated at pilot scale. A 0.3-1.0 L/sec pilot plant was designed for lime and polymer addition, flocculation, clarification, filtration and sludge recycle. Optimum operating ranges were determined for the individual unit processes and data on attainable levels of extractable and dissolved metals are presented. Experiments were also conducted to compare two-stage lime neutralization to single stage neutralization and to investigate sludge dewaterability and effluent toxicity. Average extractable metal levels attained as clarifier overflow concentrations were 0.25 mg/L Pb, 0.36 mg/L Zn, 0.05 mg/L Cu and 0 28 mg/L Fe. Further reductions were achieved by sand filtration. Dissolved metal levels in the clarifier overflow were about equal to extractable metal levels and were unaffected by further polishing. No performance were advantages discerned using two-stage neutralization compared to single stage. Sludge recycle proved to be an effective technique to increase clarifier sludge density. Sludge dewatering tests indicated that the sludge could be effectively dewatered by vacuum or pressure filtration. Bioassay tests showed median lethal times for salmonid test fish to be consistently in excess of the 96 hr maximum test period provided that the pH was adjusted to near neutral values before tests were conducted. (AM)

Descriptors: Mine drainage; Lead; Zinc; Copper; Iron; Pilot plants; Wastewater treatment; Canada
Identifiers· New Brunswick

79-03064
Methods of estimating sludge from power plant systems.
Kuppusamy, N.
Puerto Rico Water Resource Authority, PR
INDUSTRIAL WASTES 24(3), 32-33, Coden: INWABK
Publ.Yr: May-June 1978
illus. no refs.
No abs.
Languages: ENGLISH
Doc Type: JOURNAL PAPER
Construction and operation of wastewater treatment plants in power generating station will result if industry is to comply with existing NPDES pemits. Estimation of the resultant sludge from such a chemical treatment system will enable an industry to preplan a method for handling the sludge. The sludge obtained by the treatment of continuous wastes can be computed by assuming a conservative value of 1,000 ppm of TSS in the original effluent before treatment. The quantity of dry sludge will be 8.34X10-3 lb/gal of waste treated, a negligible amount compared with the sludge obtained due to the processing of intermittent waste from air preheater washings, fan washings, and waterside and fireside cleaning of the boiler. There is no hard and fast rule for calculating sludge amounts from treatment of intermittent wastes because of their heavy metal contaminants. To establish a relationship between the concentration of Fe in the effluent and the resulting sludge, air preheater wash composite samples were collected from the cleaning of various units of 4 fossil plants. After adjusting pH to 8 5 with calcium hydroxide to precipitate heavy metals, the quantity of resulting sludge was estimated. The relationship was linear for Fe concentrations up to 20,000 ppm. The same relationship was applicable for sludge calculation due to treatment of fan washings. Estimation of the sludge due to the chemical cleaning of the boiler was done in the same way for all phases of the cleaning except the Cu removal phase. This curve can be used in conjunction with the other data to predict sludge quantities. (FT)
Descriptors: Electric power plants; Sludges; Wastewater treatment plants

79-03061
Industrial applications of ozone.
Stopka, K.
U.S Ozonair Corp.
INDUSTRIAL WASTES 24(3), 23-24, Coden: INWABK
Publ.Yr: May-June 1978
illus. no refs
No abs.
Languages· ENGLISH
Doc Type. JOURNAL PAPER
European and Japanese fisheries use ozone (O3) for sterilization purposes. Improved treatment of industrially contaminated wastewater is obtained by enriching the air used for oxygenation with 5% O3. Sulfuric acid is added to pH 2-4, along with .05-1 g of ferric or aluminum chloride, followed by alkalization to pH 6 5-7.5 with lime. This precipitates most organics, solvents, oils, resins, fatty esters, and toxic metals. At a retention time of 6-10 min, 20 mg/L of O3 usually will produce an effluent acceptable to most environmental requirements. Cyanide decomposition can be speeded up by as much as 100 times through Cu catalysis. With appropriate pretreatment, ozonation of composite wastewater from a resin manufacturer reduced phenol from 272 to 0, formaldehyde from 376 to 0, and total SS from 2,470 to 160 mg/L. The COD in acidic wastewater from an edible oil processing plant was reduced from 10,500 to 320 mg/L, a 96% reduction. For industries requiring ultrapure water, the treatment system consists of an electrolytic coagulator tank, a 20l filter, an ion exchange bed, an O3 system with 2% O3 concentration from predried air and efficient contactors able to dissolve instantly 1 mg/L O3 into the liquid, and an activated carbon filter and 0.2l filter on discharge. Incorporation of an ozonation unit before a RO unit can prevent membrane clogging. (FT)
Descriptors: Ozonation; Wastewater treatment; Engineering

79-03060
Diesel component plant cuts water consumption with reuse and recycling.
Anonymous.
INDUSTRIAL WASTES 24(3), 20-22, Coden: INWABK
Publ.Yr: May-June 1978
illus. no refs.
No abs.
Languages: ENGLISH
Doc Type: JOURNAL PAPER
About 90,000 GPD of plant wastewater required pretreatment before discharge into the sanitary sewer, including 3,000 gal of softener regenerants, 3,200 gal of boiler blowdown, 63,800 gal of process rinses, and 20,000 gal of oil water from floor washings, spent coolants, and wash tanks. A batch process is used for water treatment. The system includes four 18,000 gal primary holding tanks. Each batch is treated chemically to remove oils and precipitate metals as hydroxides. The best results were obtained when alum was used to coagulate the oil and lime to neutralize the remaining liquid and precipitate heavy metals. The alum works even under anaerobic conditions. The wastewater treatment facility consists of a grit chamber, a raw waste wet well, 4 batch tanks for waste treatment, a 9,500 gal storage tank for waste oils, a 9,000 gal storage tank for sludge, and 2 outside drying beds. The plant's average monthly consumption of 16 mgd is 40% below the original estimates, at a savings of about $6,000/mo. (FT)
Descriptors: Industrial effluents; Effluent treatment; Water reuse; Water recycling; Wastewater treatment; Automotive industry wastes
Identifiers: diesel component industry

79-03000
Advanced wastewater treatment nature's way.
Ember, L R.
Environmental Science & Technology, 1155 16th St. NW, Wash., DC 20036
ENVIRONMENTAL SCIENCE & TECHNOLOGY 12(9), 1013-1014, Coden: ESTHAG Publ.Yr: Sept. 1978
illus. no refs.
Sum.
Languages ENGLISH
Doc Type: JOURNAL PAPER
Five interconnected hyacinth ponds, designed to handle a 100,000-gpd flow and sized for a 6-d maximum retention period, received chlorinated secondary effluent from an activated sludge treatment plant receiving domestic wastes and operating at 95+% BOD and SS removal efficiences. By incorporating the nutrients into their biomass the plants reduced N levels from 10-30 to 0.6 mg/L, and P levels from 5 to 3.5 mg/L. Harvested hyacinths can be dried, mixed with sludge, and processed as fertilizer, or used to produce methane. An alum or ferric chloride precipitation step may be needed to meet forthcoming tertiary P standards. The hyacinths reduced the effluent coliform count to zero and the chlorinated hydrocarbon concentration to about 0.005 mg/L (50%); trace metals were reduced to J 0 001 mg/L. (FT)
Descriptors: Florida; Wastewater treatment; Tertiary treatment; Phosphorus removal; Nitrogen removal; Coliforms; Chlorinated hydrocarbon compounds; Plants; Wastewater treatment plants
Identifiers: water hyacinths; Coral Springs

79-02832
A clean water project in Poland.
Kieszkowski, M.; Jackson, G. S.
Inst. of Precision Mechanics, Plating Effluent Treatment Dept , 00-967 Warsaw, Pol.
ENVIRONMENTAL SCIENCE & TECHNOLOGY 12(8), 896-899, Coden: ESTHAG Publ.Yr: Aug. 1978
illus. refs.
Sum.
Languages: ENGLISH
Doc Type: JOURNAL PAPER
Wastewaters produced in metal finishing operations contain such pollutants as cyanides, chromates, heavy metals, mineral acids, alkalis, oils, greases, detergents, and organic solvents. The most common effluent treatment consists of well-known, conventional chemical procedures which can be done either continuously or batch-wise. They involve several operations, such as alkaline chlorination of segregated cyanide solutions, reduction of segregated chromate solutions, and final neutralization of mixed effluents and precipitation of metal hydroxides, followed by land fill disposition. A schematic diagram of such an effluent treatment plant is presented. Applied research for the Polish metal finishing industry is conducted by the Institute of Precision Mechanics, in Warsaw, which has developed several new effluent treatments and material recovery techniques The most promising include evaporative recovery of plating bath constituents from rinse waters, RO systems for some plating solutions, improved ion exchange systems for single metal recovery from separated rinse streams, secondary polishing systems for final effluent purification, rinse water purification steps prior to evaporative recovery of RO, foreign metal recovery and other impurity removal from metal finishing solutions, ultrafiltration methods for water reclamation, and solidification of metal finishing sludges containing mixed metallic hydroxides. Other promising techniques include possible utilization of sulfide precipitation of heavy metals, solvent rinsing, ion flotation, C adsorption, and recovery of metals from hydroxide sludges by solvent extraction. (FT)
Descriptors: Metal finishing industry; Pollution control; Materials recovery; Reverse osmosis; Ion exchange; Engineering ; Cleaning process; Heavy metals; Poland
Identifiers: plating industry; Polish Institute of Precision Mechanics

79-02591

Wet electrostatic precipitator cuts opacity to 10% or less.

Rockenbach, D.
Intalco Aluminum Co., Ferndale, WA 98248

CHEMICAL PROCESSING. CHICAGO 41(10), 28-30, Coden: CHPCAI Publ Yr. Sept. 1978
illus. no refs.
Sum.
Languages: ENGLISH
Doc Type: JOURNAL PAPER

The existing scrubber system for exhaust gases from bake ovens at a Washington State aluminum plant was not capable of meeting new air quality codes or wastewater specifications without add on equipment. Four vertical wet electrostatic precipitators with integral preconditioners were chosen because of their low cost, materials of construction, high operating velocities, and ease of installation. Water for the precipitator and preconditioner is treated in separate loops. No preconditioner loop water is allowed into the precipitator loop. Hydrated lime is used for precipitation of F. The system is closed loop except for evaporation and the small amount of liquor that escapes with the sludge. The wet precipitator is fabricated from corrosion resistant fiberglass with Hastelloy discharge electrodes. Particulate efficiencies during acceptance testing were 91%-97% with 4 units operating. Condensible tars account for 12% of inlet of 73% of outlet particulates, for a 67% collection efficiency. The system is designed to run in the acid mode while collecting F- but could be modified to the basic mode to maximize sulfur dioxide removal. Operation is fully automatic. (FT)

Descriptors: Emission control equipment; Electrostatic precipitators; Metal industry; Aluminum; Fluorides

79-00626

Wastewater from plating works-required pretreatment and disposal of concentrates.

Imhoff, K R.
Ruhrverband und Ruhrtalsperrenverein, Kronprinzenstrasse 37, 4300 Essen 1, FRG

International conference on advanced treatment of wastewater Johannesburg, S. Africa June 13-17, 1977
Advanced treatment and reclamation of wastewater: Conference proceedings. In PROGRESS IN WATER TECHNOLOGY 10(1-2), 419-430, Coden: PGWTA2 Publ.Yr: 1978
illus. refs. (Some in Ger.)
Sum
Languages: ENGLISH
Doc Type. CONFERENCE PAPER

The Ruhrverband ensures that the wastes of metal finishing establishments in the Ruhr catchment are recycled to the chemical industry; the sale of the wastes covers only transportation costs, but there are savings compared to chemical precipitation and sludge disposal. Wastewater is treated in 118 mostly small plants. Cyanide and chromate-containing wastewaters must be collected separately and pretreated. The central decontamination plant at Iserlohn, and the central treatment plant at Heiligenhaus are described. To supplement the system of wastewater treatment plants 4 impoundments were constructed in the Ruhr valley The central wastewater treatment plants elimiate 60% of the influent heavy metals. During low flow in the lower Ruhr river a ratio between clean water and treated wastewater of 70:30 is maintained on the average. From this mixture waterworks abstract their water and prepare drinking water by artificial groundwater recharge. (FT)

Descriptors: Federal Republic of Germany; Metal finishing industry wastes; Effluent treatment; Wastewater treatment plants; Industrial effluents; Municipal water supplies; Waste reuse

Identifiers: Ruhr valley

79-00591

The Sulfex heavy metal waste treatment process.

Feigenbaum, H. N.
Permutit Company, Inc., E. 49th St. and Midland Ave., Paramus, NJ 07652

Fifth annual industrial pollution conference Atlanta, Ga. Apr. 19-21, 1977
Fifth annual industrial pollution conference: Proceedings. Edited by L. Delpino and A. Krigman pp. 629-642 Publ.Yr: 1977
Publ: McLean, Va. Water and Wastewater Equipment Manufacturers Association
illus. no refs.
Abs.
Languages: ENGLISH
Doc Type: CONFERENCE PAPER

The Sulfex process removes heavy metals from solution in the form of S- precipitates. The iron sulfide (FeS) used as the source of S- is added to the system as a slurry prepared by combining ferrous sulfate, a soluble sulfide, and lime. The insoluble FeS forms a sludge blanket in a properly operated precipitator which serves as a source of excess unreacted S-. The metal residuals in the effluent are normally lower than can be obtained by the hydroxide process. The Sulfex process overcomes complexing and chelating agents. Hexavalent Cr can be reduced and removed in one step along with other metals and does not have to be segregated for pretreatment. Cost savings may be realized by not having to use alkalis to raise pH above 8-9 as is necessary for hydroxide precipitation along with additional acid to readjust the pH to acceptable discharge range Dual media pressure filters are provided for polishing removal of SS carried over from the reactor. Cyanide bearing wastes must be pretreated. (FT)

Descriptors: Heavy metals; Precipitation; Effluent treatment ; Metal finishing industry wastes; Wastewater treatment; Industrial effluents; Sulfur compounds; Cyanides
Identifiers: Sulfex

79-00573

Advanced wastewater treatment produces a recyclable product.

Argo, D. G.
Orange County Water District, Fountain Valley, CA 92708

Fifth annual industrial pollution conference Atlanta, Ga. Apr. 19-21, 1977
Fifth annual industrial pollution conference: Proceedings. Edited by L. Delpino and A Krigman pp. 233-253 Publ.Yr: 1977
Publ. McLean, Va. Water and Wastewater Equipment Manufacturers Association
illus. no refs.
No abs.
Languages: ENGLISH
Doc Type. CONFERENCE PAPER

The Orange County Water District is injecting 20,000-30,000 acre-ft/yr of reclaimed wastewater to provide a barrier against seawater instrusion into the aquifer. The wastewater reclamation plant was designed to treat 15 MGD of trickling filter secondary effluent. The advanced wastewater treatment processes included are lime clarification, ammonia stripping, recarbonation with breakpoint chlorination, mixed media filtration, activated carbon adsorption, post chlorination, RO demineralization, and injection. The plant effectively reduces heavy metal concentration to levels comparable to federal drinking water standards. Chemical clarification with lime results in significant reduction of all metals except Se and Hg, both of which are already below drinking water standards in the plant effluent. Only Cd, Cr, Cu, and Zn are reduced by activated carbon treatment. To reduce the TDS concentration, 5 MGD will be treated by RO; the RO plant will include pH control, feeding of sodium hexametasphophate as a threshold precipitation inhibitor, and 25 l cartridge filter, and prechlorination. When the demineralized water is blended with the remaining effluent, the total cost for treating water will be $206/acre-ft. (FT)

Descriptors: California; Wastewater treatment; Water recycling; Water resources; Injection wells; Aquifers
Identifiers: Orange County

78-00236
The choice is yours with phosphorus removal.
Syal, R. K
John David Jones & Assoc., Cuyahoga Falls, OH
WATER AND WASTES ENGINEERING 14(8), 47-50, Coden: WWAEA2 Publ.Yr: Aug 1977
Illus no refs.
Sum.
Languages: ENGLISH
Factors to consider in selecting the most economical method of P removal from domestic and industrial wastewaters include characteristics of the particular waste, size and type of basic treatment system, degree of operational and maintenance attention available, availability and cost of chemicals, and degree of removal required. Phosphorus in raw wastewater is found as orthophosphate ion, polyphosphates or condensed phosphates, and organic phosphate. Of these, the 1st is the easiest to remove by precipitation. Lime and the salts of Al and Fe are the most commonly used chemicals. The use of lime is limited to the primary and tertiary P removal process due to the incompatability of optimum lime precipitation pH conditions and the maintenance of an optimum environment for microbial life. Alum or ferrous chloride addition to activated sludge, or chemical-biological methods, are the most promising. When planning the system, the designer should be cognizant of the P levels in the effluent SS. If total P residuals of J0. 5 mg/l are required, a multimedia filtration system is recommended. The advantages of metal addition for removal are ease of operation, relatively small additional solids causing increases in sludge density and dewaterability, and flexibility to changing conditions. (from Text)
Descriptors: Phosphorus removal; Wastewater treatment; Aluminum compounds; Iron compounds; Lime

77-00391
Removal of heavy metals from industrial effluents.
ROUSE, J.V.
EPA, National Enforcement Investigations Center, Suite900, Lincoln Tower, 1860 Lincoln St., Denver, CO 80203
American Society of Civil Engineers. EnvironmentalEngineering Division. Journal, 102(EE5): 929-936, Oct.1976 Publ Yr: 1976
Languages. ENGLISH
Descriptors: INDUSTRIAL EFFLUENTS; HEAVY METALS; ION EXCHANGE; WASTEWATER TREATMENT; SORPTION; PRECIPITATION; NEUTRALIZATION; POLLUTANT REMOVAL
Identifiers. REVERSE OSMOSIS; CEMENTATION

77-00229
Comparison of iron(III) and aluminum in precipitation of phosphate from solution.
HSU, P H.
Rutgers Univ., Dept of Soils and Crops, New Brunswick, NJ08903
Water Research, 10(10): 903-907, 1976 Publ.Yr: 1976
Languages: ENGLISH
Descriptors: IRON; PHOSPHATE REMOVAL; ALUMINUM; WASTEWATER TREATMENT; PRECIPITATION; METALS; COAGULANTS

76-03343
Heavy-metals recovery promises to pare water-cleanup bills.
RICCI, L.J.
Chemical Engineering, 1221 Avenue of the Americas, NewYork, NY 10020
Chemical Engineering, 82(27): 29-31, Dec. 22, 1975 Publ.Yr: 1975
Languages: ENGLISH
Descriptors: ADSORPTION; ELECTROCHEMISTRY; ION EXCHANGE; MATERIALS RECOVERY; METALS; POLLUTION CONTROL EQUIPMENT; PRECIPITATION; RECYCLING; WASTEWATER TREATMENT

76-01385
Wastewater treatment at Swedish steel mills.
HALLEN, L.
Vlak AB, Industrial Wastewater Section, Fack, 162 10Vaellingby, Sweden
Water Pollution Control Federation. Journal, 47(4):773-782, Apr. 1975 Publ.Yr: 1975
Languages: ENGLISH
Descriptors: FILTRATION; INDUSTRIAL EFFLUENTS; METAL INDUSTRY; PRECIPITATION; STEEL; SWEDEN; WASTEWATER TREATMENT
Identifiers: MAGNETIC SEPARATION

75-04423
Techniques for removing metals from process wastewaters.
DELLINGER, R.W.
Univ. of Maryland, Dept. of Chemical Engineering, CollegePark, MD 20742
Chemical Engineering, 81(8): 79-85, Apr. 15, 1974 Publ.Yr: 1974
Languages: ENGLISH
Descriptors: CHEMICAL TREATMENT; ION EXCHANGE; ION REMOVAL; METALS; POLLUTANT REMOVAL; PRECIPITATION; TRACE ELEMENTS; WASTE WATER TREATMENT
Identifiers: HEAVY METALS

82-00622
Local Source Control Program for Metal Finishing Plants
Lo, M.P ; Caballero, R C.; Kremer, J.
Indust. Waste Sec., Sanitation Dis Los Angeles County, Whittier, CA
INDUST. WASTES VOL 27, NO. 6, pp. 16-21, Publ.Yr: 1981
Languages ENGLISH
From the experience of the Districts in the past 6 years, a local source control program has effected a significant reduction of pollutants from metal finishing companies. Most have complied with their effluent limits through good housekeeping measures. Many high production companies have installed elaborate end-of-pipe treatment systems. Successful functioning of either type of basic pretreatment system is dependent upon adequate involvement of company management in proper operation and maintenance of the system. Rigorous enforcement of the Phase I limits by the Sanitation Districts has encouraged company owners to give close attention to pollution control.
Descriptors: Effluents; Pollution control; Metal finishing industry; Dispersion; California; Water quality

81-01757
Effects of cadmium on the completely mixed activated sludge process.
Weber, A S.; Sherrard, J. H.
Univ of California, Davis, CA 95616
Water Pollution Control Federation. Journal 52(9), 2378-2388, Coden: JWPFA5 Publ.Yr: Sep 1980
illus 26 refs.
Eng., Fr., Ger., Port., Span. abs.
Languages: ENGLISH
Doc Type: JOURNAL PAPER
TREATMENT CODES: I .(INVESTIGATIVE/OBSERVATION) ; T .(THEORETICAL/MATHEMATICAL)
A laboratory study was conducted to measure the effect of Cd on COD removal efficiency, degree of nitrification, and the kinetic coefficients Ymax (the maximum yield coefficient) and b (the microorganism maintenance coefficient). Data were obtained from the operation of bench scale reactors which were fed 0, 5.15, and 9.98 mg/L solutions of Cd. Mean cell residence time was used as the primary operational control parameter, and values between =3 and 15 d were used to obtain data. COD removal efficiencies of all reactors were independent of the mean cell residence time for the range studied. The COD removal efficiencies for the reactors containing Cd were slightly less than those obtained for the control reactor. No distinguishable difference was obtained for the kinetic coefficients Ymax and b. Nitrification, however, was significantly altered in the presence of Cd The degree of nitrification decreased as Cd concentrations increased at a given mean cell residence time (AM.FT)
Descriptors Cadmium; Activated sludge process; Heavy metals ; Toxicity; Nitrification; COD; Kinetics; Mathematical analysis; Toxic materials; Laboratory testing; Biological treatment

81-00579
Why is Rotunda still an RO success?
Sumrall, H.; Schomaker, B
Rotunda West
WATER AND WASTES ENGINEERING 17(7), 24-28, Coden: WWAEA2 Publ.Yr: Jul 1980
illus. no refs.
No abs.
Languages: ENGLISH
Doc Type: JOURNAL PAPER
A RO water treatment plant in Rotunda West, Florida, in operation since Jan. 1973, treats 500,000 gpd of water, with the highest TDS value on record. Early problems were encountered with the wells pumping sand, silt, H2S, and O2. The problems were corrected by lining the well casing with PVC., replacing pump metallic parts, and installing foot valves on the suction column below the pumps. The plant has performed successfully since that time, primarily because of good operation and maintenance procedures and the use of B-9 hollow fiber membranes. To date, 40 of the original 66 permeators are still in use. Their longevity is attributed to proper and conservative engineering design and review by qualified personnel. (FT)
Descriptors: Reverse osmosis; Water treatment plants; Florida; Membranes
Identifiers: Rotunda West

80-07062
The economic impact of proposed regulations to reduce particulate emissions from steel mills and industrial fugitive sources, R78-10 and R78-11.
ILLINOIS INSTITUTE OF NATURAL RESOURCES IINR DOCUMENT Publ Yr: Apr 1979
illus. numerous refs.
Sum.
Languages: ENGLISH
The benefits and costs of the proposals submitted by Interlake, Inc. and by Granite City Steel are examined. Questions to be answered concerning the benefits of the regulations include what reductions in morbidity and mortality can be expected, what reductions in crop damage and materials can be expected, and what improvements in recreation and aesthetics will result. The question of costs will examine capital, operation, and maintenance costs as well as the effect they will have on the price of goods and services of the producer. Control strategies are evaluated and pollution sources analyzed. Results of the study are presented, but their interpretation is difficult due to the large amount of uncertainty associated with the benefits and costs. (AM)
Descriptors: Economics; Cost-benefit analysis; State regulations; Particulates; Emission control; Metal industry; Air pollution control; Environmental impact; Illinois
Identifiers: Granite City Steel; Interlake, Inc.

80-02062
Lots of hazardous waste finds a home in Kansas.
Anonymous
NATIONAL WASTE NEWS 2(11), 15-18, Coden: NWNED5 Publ.Yr: Nov 1979
illus. no refs.
No abs
Languages. ENGLISH
Doc Type: JOURNAL PAPER
TREATMENT CODES: C .(CASE STUDY) ; D .(DESCRIPTIVE)
The Kansas Industrial Environmental Services, Incorporated disposal site is located in a 90-ft layer of Wellington-Admire clay beneath which is a small nonpotable aquifer The site began operation in 1977 and has a life expectancy of 10-15 yr. Prior to startup, 100 permeability studies were conducted on the 80-acre site, and 6 perimeter and 4 internal monitoring wells were dug to regularly check for leachate. The site accepts plating wastes, heavy metal slurries and sludges, concentrated acids, caustics, paint sludges, oils and solvents, cyanide compounds, and miscellaneous organic chemicals Two evaporation lagoons and 4 ponds are used for evaporation and neutralization of certain wastes, whereas 2 slit trenches and an area fill are employed for landfilling drums. The firm is involved in a waste stream reduction program, and the property is landscaped to allow surface water to drain into holding and evaporation lagoons. In addition to a tight maintenance program, the firm emphasizes safety by using safety-related equipment and conducting a safe driver education course (FF)
Descriptors: Kansas; Disposal sites; Aquifers; Hazardous materials; Landfills; Maintenance; Sludge disposal; Acids; Oils; Solvents; Cyanides; Waste management
Identifiers: Kansas Industrial Environmental Services, Inc.; permeability studies; safety measures; plating wastes; heavy metal slurries; caustics

80-00540
30 years of refuse-fired boiler experience.
Velzy, C. O.
Charles R Velzy Assoc., Inc , 355 Main St., Armonk, NY 10504
Engineering Foundation conference, unit operations in resource recovery engineering Rindge, New Hampshire Jul 1978
RESOURCE RECOVERY AND CONSERVATION 4(1), 83-98, Coden: RRCODN Publ.Yr: May 1979
illus. refs.
ISSN: 0304-3967
Abs.
Languages: ENGLISH
Doc Type: JOURNAL PAPER CONFERENCE PAPER
TREATMENT CODES: D .(DESCRIPTIVE)
The town of Hempstead, New York, began operating energy-from-refuse plants in 1950, incorporating waste heat boilers and producing power totally independent of the local power system. The experiences gained in the areas of boiler tube metal wastage, boiler fouling, particulate emission control, and maintenance and availability are described. With effective use of overfire air, judicious use of protective coatings, conservative volume and velocity in the furnace and convection bank, and limitation of steam temperatures, tube wastage can be avoided. Careful selection of tube configuration and spacing to achieve conservative gas velocities along with proper location of sootblowers can eliminate convection bank tube fouling in incinerator boilers. Properly cooled walls along the grate line shed slag effectively; however, design of these walls is critical to their operation and maintenance experience. A properly sized 2-field electrostatic precipitator following a well operated furnace and boiler is apparently more than adequate to comply with present federal regulations related to dry particulates (AM)
Descriptors: Refuse disposal; Heat recovery; New York, Municipal wastes; Resource management; Energy sources; Fuels; Incinerators; Engineering
Identifiers: Hempstead

80-00418

RMA-a waste water treatment system for electro-plating operations.

Anonymous

DORNIER POST No. 2, 31-33. Coden: DOPOAC Publ.Yr: 1979

Illus. no refs.

ISSN. 0012-5563

No abs

Languages: ENGLISH

Doc Type: JOURNAL PAPER

Dornier has developed a cost-effective system for recycling metals from wastewater which brings wastewater treatment and metal recycling within the reach of medium and small electroplating operations. Metals are recycled using high quantities of wastewater treated by precipitating only metallic ions or both kinds of ions, depending on the needs of the operation. Loaded resins are not regenerated in the electroplating operation but are collected by an operating company and exchanged for regenerated resins, thereby eliminating the need to regenerate ion exchanger resins and to treat the eluates in a detoxication plant. The essential system component is the modular ion exchanger column with easily replaced cartridges regenerated in a central installation when they are charged. The cartridges are easy to handle and do not require special training for monitoring and operation. The system can be used for automatic water recycling systems, maintenance of process baths, pre- and after-treatment baths, separate treatment of rinse baths for metal recovery, and elimination of toxic metals or complex-forming agents. The Dornier-developed system offers the following advantages: modular conception, small dimensions, low cost, easy handling and high operational safety, and maintenance of prescribed wastewater quality. (SS FT)

Descriptors: Wastewater treatment; Economics; Metals; Recycling; Ion exchange; Precipitation; Metal industry; Technology

Identifiers. electroplating operations; modular ion exchanger column

79-05096

Packingless plastic pumps for flow rates to 5,000 gpm.

Anonymous.

CHEMICAL PROCESSING CHICAGO 41(13), 76, Coden: CHPCAI Publ.Yr: Mid-Nov. 1978

Illus. no refs

No abs.

Languages: ENGLISH

Doc Type JOURNAL PAPER

An acid-resistant, double volute, centrifugal pump, designed to operate at 5,000 gpm and heads N180 ft, is constructed of modified phenolic resin and carbon-fiber reinforced plastic to withstand erosion and corrosive attack by a wide range of aggressive substances. The packingless design uses and expeller to create a hydraulic seal when the pump is running and a centrifugally-operated check valve to assure a positive shaft seal when shut down. The design provides trouble-free operation with minimal maintenance. Pumps now in use, each with a 12-in suction, a 10-in discharge, and a 21-in impeller, are being used to recirculate solutions of dilute sulfuric acid (H_2SO_4) and hydrofluoric with a specific gravity of 1.05 at 145degF and solutions of dilute H_2SO_4, metallic dust, and fluorides at 145degF and 134degF (FT)

Descriptors: Pumps; Machinery; Engineering; Plastics; Corrosion; Acids; Smelting; Air pollution control; Pollution control equipment; Technology

79-04326
A natural environment for resource recovery.
Easterbrook, G. E.
Waste Age, 631f Gross Point Rd., Niles, IL 60648
WASTE AGE 9(8), 50-62, Coden: WAGEAE Publ.Yr: Aug. 1978
illus. no refs.
Sum.
Languages. ENGLISH
Doc Type: JOURNAL PAPER
When Monroe County, New York, ran short of landfill space in the early 1970s and began evaluating new sites, the voters selected an advanced $50.4 million resource recovery plant to recycle the county wastes The plant designed and scheduled to be operated by Raytheon Services of Cambridge, Massachusetts, should start-up early in 1979. It was financed by a $31.9 million county general-obligations bond and a $18.5 million New York State grant from an omnibus bond issue The 2000 TPD facility will produce about 65% of the infeed as RDF. It is also designed to recover ferrous metal, Al, mixed-color glass, and lesser by-products. The process combined original Raytheon concepts and materials recovery techniques pioneered by the BOM. Four shredding stations use a total of 7 shredders. The bulk of the coarse-shredded material will proceed to 1 of 4 rotary classifiers, big barrels which turn slowly while air blows through at 15 or 20 mph. Heavy materials drop to a conveyor. Light materials reaching the top of the rotary classifiers will be blown through a fine screen into combustible shredders and stored as RDF. The heavy material is destined for a more complex treatment-the separation into residue classes and segregation of the remaining RDF stock. The plant also includes a water treatment module, involving a static sieve, filters, and holding tanks for surges. The multistage shredding operation should slash maintenance costs, and the shredder 12 in pass is so wide that it will not detonate explosives. The RDF will be transported to Rochester Gas and Electric and used to operate the recycling plant itself. The county legislature passed an ordinance requiring all private refuse haulers to patronize the plant. (FT)
Descriptors: Solid waste disposal; Materials recovery; Fuels ; Municipal wastes; New York; Waste management; Waste treatment plants; Waste recycling
Identifiers: Monroe County; Raytheon Services Co.

79-00491
Improvements in sensor and system technology.
Briggs, R.; Page, H. R. S.; Schofield, J. W.
Water Research Centre, Stevenage Lab., Stevenage, Hertfordshire SG1 1TH, Eng
International workshop on instrumentation and control for water and wastewater treatment and transport systems London and Stockholm May 1977
Instrumentation and control for water and wastewater treatment and transport systems: International workshop proceedings. In PROGRESS IN WATER TECHNOLOGY 9(5-6), 43-52, Coden. PGWTA2 Publ.Yr: 1978
illus. refs.
Abs.
Languages: ENGLISH
Doc Type. CONFERENCE PAPER
Water quality monitoring networks should be based on a flexible modular system of telemetric and data processing modules capable of containing appropriate mathematical models and deploying only the minimum of robust and reliable sensors necessary to achieve a given objective. The following significant determinands are considered: temperature, DO, organic matter, SS, Cl-, F-, nitrate, ammonia, heavy metals, trace organics, and toxicity. Sensors should be accurate, reliable, and require little maintenance. They should be interchangeable with others of the same type without reclibration, and unaffected by changes in other variables. They should be inexpensive, and provide an output easily connected to the telemetry system Use of duplicate sensors in a mode such that one measures sample and the other standard, coupled with the ability to switch streams to confirm or deny unusual quality data, provide automatic calibration, and extend duty cycles, has enabled satisfactory performance to be achieved from many existing sensors. Computers can be used to calculate functions of several determinants or pollution indexes so that alarms can be based on a number of factors taken together. The physicochemical monitoring scheme in the River Wear uses dual sensors for the measurement of DO, temperature, turbidity, organic matter, and ammonia. Operation of the monitors is controlled by a minicomputer at the treatment plant. The dual sensor system was used to monitor DO in settled sewage at Washington Wastewater Treatment Works. During design, construction, and commissioning, it is advisable to spend effort on staff training and motivation. (FT)
Descriptors. United Kingdom; Technology; Monitoring systems; Wastewater treatment plants; Computers; Water quality; Rivers; Telecommunications; Monitoring instruments
Identifiers: telemetry; sensors

78-04157
The expanding role of high ratio fabric filtration in the metallurgical industries.
Erlesand, L.; Stragert, S.
Lund Univ. of Technology, Mechanical Engineering, S-220 07 Lund, Sweden
International clean air conference Brisbane, Australia May 15-19, 1978
Proceedings of the international clean air conference: Clean air-the continuing challange. Edited by E. T. White, P. Hetherington and B. R. Thiele pp. 239-254 Publ.Yr: 1978
Publ: Ann Arbor, Mich Ann Arbor Science Publishers
illus. no refs.
No abs.
Languages: ENGLISH
Doc Type: CONFERENCE PAPER
The experience so far from full-scale installations with FLAKT high-ratio filters (HRFs) for cleaning metallurgical fumes shows that the approach was in the right direction. The use of HRFs, with filtering velocities somewhat K3 times larger than with low-ratio filters (LRFs), has decreased the size of the fabric filter tremendously. The ground space required is J50% than for the LRF, and the total volume, estimated from the ground floor to the roof, is 75% less than for the LRF. Because of its smaller size, the HRF has a total power consumption somewhat less than the LRF. Inspection of bags taken out after 1 year of operation does not show any significant wear The cleaning sequence for the FLAKT HRF is always controlled by the pressure differential across the filter, which minimizes the wearing of the bags. Considering the advantages for inspection and maintenance, for having fans downstream of the filter, and the about 20% lower investment cost, there is a good chance that in the very near future the HRF will completely replace the conventional LRF. As further development is continuing to increase the length of the bags to 6-7 m and perhaps more, the advantage over LRFs will steadily increase. (FT)
Descriptors. Metal industry; Industrial emissions; Emission control; Filters; Filter media; Dusts
Identifiers: high-ratio filters; low-ratio filters; FLAKT

78-03971
Electrochemical recovery of metals.
Barbier, M.
Electrotechnology: Vol. 1 Wastewater treatment and separation methods. Edited by R P. Ouellette, J. A. King and P. N. Cheremisinoff 239-342 Publ.Yr: 1978
Publ: Ann Arbor, Mich. Ann Arbor Science Publishers
illus numerous refs (Some in Fr.; Ger.)
No abs.
Languages: ENGLISH
Doc Type: BOOK CHAPTER
Status Information on current research and development of new processes for electrowinning metals from minerals is presented Interest is focused on methods which have electrolysis as a common base, the electrolyte being either an aqueous solution obtained from the ore by leaching, flotation, or other chemical or physical process, or a high-temperature smelt of fused salts consisting of the ore itself after suitable treatment. New methods are tabulated for the recovery of about 17 metals, and show, in addition to the extracted metal, the source material, the method of recovery, and the developer of the method. In addition, the actual process is described in detail. Besides such incentives as process simplification and by-product recovery, which are mainly geological in nature, there are technological and economic advantages to electrochemical metal recovery The introduction of electrolytic techniques can reduce the number of milling operations, avoid complicated chemical procedures, reduce fossil fuel consumption, and make transportation of voluminous, heavy ore concentrates unnecessary Economic advantages can be derived from savings in energy and materials, and reduction of capital, operation, and maintenance costs. The avoidance of thermal processes involving calcination of the ore, decomposition of ore at high temperatures, emission of flue gases from the fuels used, and of chemical gaseous species and particulates from the minerals is invaluable. Wastewaters and other residues or tailings in aqueous solutions are amenable to recovery of the included metals by electrolysis. The material dispersed to the environment or going back to the water table can be purified to meet pollution standards. (FT)
Descriptors: Metals; Metal industry; Mining; Electrochemistry; Smelting; Economics; Engineering; Materials recovery; Technology; Pollution control; Water purification; Wastewater treatment
Identifiers: electrolytic metal extraction from ores

78-03453
Viable recycling-fact or fiction.
Dodsworth, M. F.
Council of the Borough of Harrogate, Eng.
SOLID WASTES 68(1), 6-15, Coden: SOWAD3 Publ.Yr: Jan. 1978
illus. no refs
No abs.
Languages: ENGLISH
Under proper management, recycling plants can be economically feasible. About 220 T refuse are processed at the Harrogate site every week. Large appliances, car parts, and other easily removable scrap are removed and deposited at an outside dump area in groups of ferrous and nonferrous scrap. Glass recycling proved to be totally uneconomic. Paper recycling was done using a Scapa Hindle HB4 with a shredder. Shredding increased paper bale weights from an average of 5-6.5 cwt. A separate salvage operation, which has been in use for a number of years, collects free-of-change paper and cardboard from commercial premises. During the domestic collection round, refuse workers place separated paper on racks fitted to the sides of the collection vehicles. Tip personnel at the refuse sites receive bonuses based on the amount of reclaimed paper they separate. Increasing prices of recycled paper may result in the profitable operation of a project in which paper is purchased from voluntary organizations. The recycling plant at Harrogate produces 2 grades of paper, mixed and fiberboard. Two men could process N50 T of recycled paper in a normal work week in addition to routine maintenance and loading trailers. Success of any recycling scheme involves minimal labor costs, maximum use of collection vehicles, and maximum cooperation between workers, the public, and other various organizations. (FT)
Descriptors: England; Paper wastes; Waste recycling; Waste reuse, Solid wastes; Economics; Scrap metals; Glass
Identifiers: Harrogate

78-03370
Electrodialysis in advanced waste water treatment.
Korngold, E.; Kock, K.; Strathmann, H.
Ben Gurion Univ., R & D Authority, Beer Sheva, Israel
International symposium on membranes: Desalination and waste water treatment Jerusalem, Israel Jan. 8-12, 1978
International symposium on membranes: Desalination and waste water treatment Proceedings. In DESALINATION 24(1-3), 129-139, Coden: DSLNAH Publ.Yr: Jan. 1978
illus. refs.
No abs.
Languages: ENGLISH
Doc Type CONFERENCE PAPER
Electrodialysis (ED) can be successfully applied only to industrial effluents with a relatively low salt concentration which do not contain an excessive amount of organic fouling and poisoning materials. Applicable effluents include those produced in the electroplating, semiconductor, and pharmaceutical industries The advantages of ED over other treatment processes include the savings on water costs resulting from complete recycling of water and wastewater constituents, low investment costs, continuous operation at relatively low energy costs, and automatic operation with a minimum of maintenance. The following examples of successful ED applications are given. regeneration of chemical Cu plating baths; recycling rinsing waters from chemical plating processes; recycling electroplating rinsing water; recycling rinsing water from a phosphate plating process; and recovery of sulfuric acid from pickling solutions. (FT)
Descriptors: Dialysis; Industrial effluents; Effluent treatment; Metal finishing industry wastes; Waste recycling; Tertiary treatment
Identifiers: electrodialysis

78-02305
Arsenic removal from roaster off-gases.
Goodfellow, H. D.; Nenniger, E H.; Twigge-Molecey, C.; et al
Can.
Fourth international clean air conference Tokyo, Japan May 16-20, 1977
Fourth international clean air conference: Paper abstracts p. 195 Publ.Yr: Mar. 15, 1977
Publ: (n.p) Japanese Union of Air Pollution Prevention Association
Abs. only
Languages: ENGLISH
Doc Type: CONFERENCE PAPER
A system to remove As from a roaster gas was designed in 1972-73 and was commissioned in 1974 for a gold mining operation in northern Ontario. The gold recovery operation requires the roasting of arsenical pyrite. The gas system includes the removal of entrained dust after the cyclones by a hot electrostatic precipitator followed by the sublimation of arsenic trioxide (As_2O_3) in a unique mixing vessel by direct contact with induced ambient air. The mixer is designed to maintain the interface between hot and cold gases away from the walls and to operate at low energy losses, eliminating surface buildup and associated maintenance requirements. Sublimed As_2O_3 is removed in a high-efficiency shaker bag filter before emission from a light-weight, insulated, metallic stack. Operating data are presented with some experimental data from the development stage of mixer design. (AM)
Descriptors: Arsenic compounds; Mining; Canada; Gold; Gaseous waste treatment; Air pollution control; Pollutant removal
Identifiers: roasters; arsenic removal; Ont.; abstract only

78-02010

The application of wet electrostatic precipitators for the control of emissions from three metallurgical processes.

Jaasund, S. A.; Mazer, M. R.
Bethlehem Steel Corp , Bethlehem, PA 18016

Particulate collection problems using ESP's in the metallurgical industry

Proceedings: Particulate collection problems using ESP's in the metallurgiacal industry. Edited by C. E. Feazel. In U.S. ENVIRONMENTAL PROTECTION AGENCY. OFFICE OF RESEARCH AND DEVELOPMENT. ENVIRONMENTAL PROTECTION TECHNOLOGY SERIES EPA-600/2,77-208 Coden: EPTSBT pp. 1-22 Publ.Yr: Oct. 1977
illus. refs.

No abs

Languages: ENGLISH

Doc Type: CONFERENCE PAPER

Bethlehem Steel's test and development program to adapt wet electrostatic precipitators (WESP) for the control of particulate emissions from mineral wool production, hot scarfing, and sintering operations is reported. Work over a 2-yr period culminated in operating procedures and design depositions to counter problems with solid and liquid depositions on high-voltage components, plugging of the water supply systems, and operation in the restricted-blowdown, recirculated-water mode It is possible to successfully adapt WESPs to control hard-to-clean particulate emissions from metallurgical processes, and they can be made to perform satisfactorily when operating with minimum blowdown of recirculated acidic water, but the minimum blowdown rate must be determined for each specific system. Routine maintenance, which can be scheduled to coincide with a plant's normal turndown, must, however, be provided to ensure effective performance Test work so far gives no basis for concluding that compliance with visible emission standards is feasible with WESP technology Schematic diagrams of pilot and full-scale WESPs at various Bethlehem plants are included, and emission and particulate test results on various systems are tabulated. (FT)

Descriptors Electrostatic precipitators; Metal industry; Particulates; Industrial emissions; Pollution control equipment; Air pollution control

Identifiers: wet electrostatic precipitators; mineral wool; Bethlehem Steel Corgll HF

78-01604

Collection, transportation and mechanical handling: Collection and transportation.

Stone, R.
Ralph Stone & Co , Inc , 10954 Santa Monica Blvd , Los Angeles, CA 90025

Handbook of solid waste management, edited by D. G. Wilson pp. 95-114 Publ Yr 1977
Publ: New York Van Nostrand Reinhold Company
illus. refs.

No abs.

Languages: ENGLISH

Doc Type: BOOK CHAPTER

In urban areas, an average of 2.4 lb/d of solid waste are produced by each resident. Typical residential solid waste by weight is 35%-45% paper, 10%-20% food waste, 5%-10% glass and ceramics, 5%-10% metals, 5%-15% grass and leaves, 2%-6% textiles, and J4% wood, plastics, rubber, leather, and inert materials. The aggregate composition of commercial solid wastes is similar to that of residential waste, but individual generation points tend to produce a more homogeneous waste stream. The composition of other waste streams is reviewed. Increased industrial application of air and water pollution controls will increase the solid wastes destined for disposal. Containers, bags, and drop boxes are reviewed as storage devices Compactors can reduce space requirements by increasing solid waste density. Producer-provided segregation of reclaimable materials is a simple method of solid waste separation. Collection system parameters discussed include crew size, task assignment, service type, equipment maintenance and design, and operation. To determine the feasibility of using a transfer station, cost-benefit studies of alternative collection-transport systems must be made and tradeoffs determined. Volume reduction processing can take place at transfer stations. Long-distance transport alternatives considered are rail hauls, barges, semitrailer trucks, and pipelines. A proper solid waste collection system will help reduce street dirt and litter. The available alternatives of manual street cleaning, flushing machines, and sweeping machines are reviewed. (FT)

Descriptors: Urban areas; Solid wastes; Solid waste disposal ; Waste management; Transportation; Refuse collection

78-01296
A sampler for collecting evolved gases from sediment.
Chau, Y. K.; Snodgrass, W J.; Wong, P. T. S.
Canada Centre for Inland Waters, Burlington, Ont L7R 4A6, Can.
WATER RESEARCH 11(9), 807-809, Coden: WATRAG Publ.Yr: 1977
illus. refs.
Abs.
Languages: ENGLISH
A lightweight, simple-operation sampler was successfully applied in studies of the production of methane, carbon dioxide, N, and O. The sampler is stainless steel cone 58.5 cm in diameter and 33.7 cm high. It is a hand-operated, self-contained unit Gases are collected by water displacement. The sampler sits on the bottom with the feet placed away from the gas-evolving area, rather than on thrusts in the sediment. The sediment in the sampling area is exposed to allow maintenance of natural fauna. The sampler has no grid bars so the gas evolution is not caused by mechanical disturbance; its sample bottle is detachable and can be replaced in the field. It is currently used in studies of the production of volatile organo-metallic compounds, such as (CH3)4Pb, (CH3)2Se, (CH3)2Se2, and methyl derivatives of arsine from metal-rich sediments. (AM & FT)
Descriptors: Sediments; Gases; Sampling methods; Methane; Carbon dioxide; Nitrogen; Oxygen; Metals; Organic compounds; Sampling instruments
Identifiers: methyls

78-00236
The choice is yours with phosphorus removal.
Syal, R K.
John David Jones & Assoc., Cuyahoga Falls, OH
WATER AND WASTES ENGINEERING 14(8), 47-50, Coden: WWAEA2 Publ.Yr: Aug 1977
illus. no refs.
Sum
Languages. ENGLISH
Factors to consider in selecting the most economical method of P removal from domestic and industrial wastewaters include characteristics of the particular waste, size and type of basic treatment system, degree of operational and maintenance attention available, availability and cost of chemicals, and degree of removal required. Phosphorus in raw wastewater is found as orthophosphate ion, polyphosphates or condensed phosphates, and organic phosphate. Of these, the 1st is the easiest to remove by precipitation. Lime and the salts of Al and Fe are the most commonly used chemicals. The use of lime is limited to the primary and tertiary P removal process due to the incompatability of optimum lime precipitation pH conditions and the maintenance of an optimum environment for microbial life Alum or ferrous chloride addition to activated sludge, or chemical-biological methods, are the most promising. When planning the system, the designer should be cognizant of the P levels in the effluent SS. If total P residuals of 10 5 mg/l are required, a multimedia filtration system is recommended. The advantages of metal addition for removal are ease of operation, relatively small additional solids causing increases in sludge density and dewaterability, and flexibility to changing conditions. (from Text)
Descriptors: Phosphorus removal; Wastewater treatment; Aluminum compounds; Iron compounds; Lime

APPENDIX B

METRIC-ENGLISH UNITS CONVERSION

English		Metric
1 horsepower (HP)	=	745.7 Watts
1 gallon	=	0.0037854 m^3
1 gallon	=	3.7854 L
1 ft	=	0.3048 m
1 ft^2	=	0.0929 m^2
1 ft^3	=	0.0283 m^3
1 GPD/ft^2	=	0.0407 m^3/day/m^2
1 lb/gallon	=	1.20 x 10^5 mg/L
1 ft/sec	=	18.288 m/min
1 lb	=	453.59 g.

APPENDIX B

REGULATIONS AFFECTING THE METAL FINISHING INDUSTRY

federal register

Friday
July 15, 1983

Part III

Environmental Protection Agency

Electroplating and Metal Finishing Point Source Categories; Effluent Limitations Guidelines, Pretreatment Standards, and New Source Performance Standards

ENVIRONMENTAL PROTECTION AGENCY

40 CFR Parts 413 and 433

[OW-FRL-2383-7]

Electroplating and Metal Finishing Point Source Categories; Effluent Limitations Guidelines, Pretreatment Standards, and New Source Performance Standards

AGENCY: Environmental Protection Agency (EPA).

ACTION: Final rule.

SUMMARY: This regulation limits the pollutants that electroplating/metal finishing facilities may discharge to waters of the United States or to publicly owned treatment works (POTW). The Metal Finishing Regulations provide effluent limitations based on "best practicable technology" and "best available technology" and establish new source performance standards and pretreatment standards under the Clean Water Act. In addition, this rule amends the pretreatment standards for existing sources for the Electroplating Point Source Category.

The preamble summarizes the legal authority, background, technical and economic bases, and other aspects of the regulation as well as a summary of comments on the proposed regulation and on the record supporting the proposed regulation. The abbreviations, acronyms, and other terms used in the preamble are defined in Appendix A. (See "Supplementary Information" below for complete table of contents).

The final rule is supported by EPA's technical conclusions detailed in the *Development Document for Effluent Limitations Guidelines, and Standards for the Metal Finishing Point Source Category*, June, 1983. The Agency's economic analysis is found in *Economic Analysis of Effluent Standards and Limitations for the Metal Finishing Industry*, June 1983. Further supporting materials are filed in the record supporting this rulemaking.

DATES: In accordance with 40 CFR 100.01 (45 FR 26048) this regulation shall be considered issued for the purposes of judical review at 1:00 p.m. Eastern time on July 29, 1983. These regulations shall become effective August 29, 1983.

The compliance date for the BAT regulations is as soon as possible, but no later than July 1, 1984.

The compliance date for New Source Performance Standards (NSPS) and Pretreatment Standards for New Sources (PSNS) is the date the new source begins operations. The compliance date for Metal Finishing Pretreatment Standards for Existing Sources (PSES) is February 15, 1986 for metals and cyanide. Metal Finishing PSES establishes two levels of toxic organic control: the less stringent must be met by June 30, 1984 for most plants and by July 10, 1985 at plants also subject to Part 420 (Iron and Steel); the more stringent must be met by February 15, 1986. In addition, Electroplating PSES requires toxic organic control by July 15, 1986.

Under Section 509(b)(1) of the Clean Water Act judicial review of this regulation can be obtained only by filing a petition for review in the United States Court of Appeals within 90 days after these regulations are considered issued for the purposes of judicial review. Under Section 509(b)(2) of the Clean Water Act, the requirements of the regulations may not be challenged in later civil or criminal proceedings brought by EPA to enforce these requirements.

Reporting provisions in 40 CFR 413.03 and 433.12 will be reviewed by OMB under the paperwork reduction act and are not effective until approved.

ADDRESS: Technical information may be obtained by writing to Mr. Richard Kinch, Effluent Guidelines Division (WH-552), Environmental Protection Agency, 401 M St., S.W., Washington, D.C. 20460. Attention: Metal Finishing Rules. Approximately two weeks from publication, the record for this rulemaking will be available for inspection and copying at the EPA Public Information Reference Unit, Room 2404 (Rear) PM-213 (EPA Library). The EPA public information regulation (40 CFR Part 2) provides that a reasonable fee may be charged for copying. Copies of the technical and economic documents may be obtained from the National Technical Information Service, Springfield, Virginia 22161 (703/487-4650). Copies of both documents will be available for review in the public record at EPA headquarters and regional libraries.

FOR FURTHER INFORMATION CONTACT: Mr. Richard Kinch, Effluent Guidelines Division (WH-552), EPA, 401 M Street, S.W., Washington, D.C. 20460, or by calling (202) 382-7159. Economic information may be obtained by writing Ms. Kathleen Ehrensberger, Economics Branch (WH-586), Environmental Protection Agency, 401 M St. S.W., Washington, D.C. 20460, or by calling (202) 382-5397.

SUPPLEMENTARY INFORMATION:

Organization of This Notice

I. Legal Authority
II. Background
A. The Clean Water Act
B. Prior EPA Regulations
C. Overview of the Industry
III. Scope of this Rulemaking
IV. Data Gathering Efforts
V. Sampling and Analytical Program
VI. Industry Subcategorization
VII. Available Wastewater Control and Treatment Technology
A. Status of In-Place Technology
B. Control Treatment Options
VIII. General Criteria for Limitations
A. BPT Effluent Limitations
B. BAT Effluent Limitations
C. BCT Effluent Limitations
C. BCT Effluent Limitations
D. New Source Performance Standards
E. Pretreatment Standards for Existing Sources
F. Rretreatment Standards for New Sources
IX. Summary of Final Regulations
A. Part 433
B. Part 413
X. Derivation of the Limitations
XI. Changes from the Proposed Limits
XII. Pollutants and Subcategories Not Regulated
A. Exclusion of Toxic Pollutants
B. Exclusion of Subcategories
XIII. Costs, Effluent Reduction Benefits, and Economic Impacts
A. Costs and Economic Impacts
B. Executive Order 12291
C. Regulatory Flexibility Analysis
D. SBA Loans
XIV. Non-Water-Quality Environmental Impacts
A. Air Pollution
B. Noise
C. Radiation
D. Solid Waste
E. Energy
XV. Best Management Practices (BMPs)
XVI. Upset and Bypass Provisions
XVII. Variances and Modifications
XVIII. Implementation of Limitations and Standards
A. Relation to NPDES Permits
B. Indirect Dischargers
C. Applicability and Compliance Dates
D. Enforcement
XIX. Summary of Public Participation
XX. Availability of Technical Information
XXI. OMB Review
XXII. List of Subjects
XXIII. Appendices
A. Abbreviations, Acronyms, and Other Terms Used in This Notice
B. Pollutants Excluded From Regulation
C. Unit Operations in the Metal Finishing Industry

I. Legal Authority

This regulation is being promulgated under the authority of Sections 301, 304, 306, 307, 308, and 501 of the Clean Water Act (the Federal Water Pollution Control Act Amendments of 1972, 33 U.S.C. 1251 *et seq.*, as amended by the Clean Water Act of 1977, Pub. L. 95-217) (the "Act") and as further amended. This regulation is also being promulgated in response to the Settlement Agreement in *Natural Resources Defense Council, Inc.* v

Train, 8 ERC 2120 (D.D.C. 1976), as modified, 12 ERC 1833 (D.D.C. 1979), modified by Order dated October 28, 1982.

II. Background

A. The Clean Water Act

The Federal Water Pollution Control Act Amendments of 1972 established a comprehensive program to "restore and maintain the chemical, physical, and biological integrity of the Nation's waters." Section 101(a).

- Section 301(b)(1)(A) set a deadline of July 1, 1977, for existing industrial direct dischargers to achieve "effluent limitations requiring the application of the best practicable control technology currently available" ("BPT").
- Section 301(b)(2)(A) set a deadline of July 1, 1983, for those dischargers to achieve "effluent limitations requiring the application of the best available technology economically achievable . . . which will result in reasonable further progress toward the national goal of eliminating the discharge of all pollutants" ("BAT").
- Section 306 required that new industrial direct dischargers comply with new source performance standards ("NSPS"), based on best available demonstrated technology.
- Sections 307 (b) and (c) required pretreatment standards for new and existing dischargers to publicly owned treatment works ("POTW"). The Act made pretreatment standards enforceable directly against dischargers to POTW's (indirect dischargers), unlike the requirements for direct dischargers which were to be incorporated into National Pollutant Discharge Elimination System (NPDES) permits issued under Section 402.
- Section 402(a)(1) allows requirements for direct dischargers to be set case-by-case. However, Congress intended control requirements to be based for the most part on regulations promulgated by the Administrator of EPA.
- Section 304(b) required regulations that establish effluent limitations reflecting the ability of BPT and BAT to reduce effluent discharge.
- Sections 304(c) and 306 of the Act required regulations for NSPS.
- Sections 304(g), 307(b), and 307(c) required regulations for pretreatment standards.
- In addition to these regulations for designated industry categories, Section 307(a) required the Administrator to promulgate effluent standards applicable to all dischargers of toxic pollutants.
- Section 308 gave the Administrator authority to collect information necessary to develop and enforce regulations.
- Finally, Section 501(a) authorized the Administrator to prescribe any additional regulations "necessary to carry out his functions" under the Act.

EPA was unable to promulgate many of these regulations by the deadlines contained in the Act, and as a result—in 1976, EPA was sued by several environmental groups. In settling this lawsuit, EPA and the plaintiffs executed a "Settlement Agreement" which was approved by the Court. This agreement required EPA to develop a program and meet a schedule for controlling 65 "priority" pollutants and classes of pollutants. In carrying out this program EPA must promulgate BAT effluent limitations guidelines, pretreatment standards, and new source performance standards for 21 major industries. See *Natural Resources Defense Council, Inc.* v. *Train*, 8 ERC 2120 (D.D.C. 1976), modified, 12 ERC 1833 (D.D.C. 1979), modified by Order dated October 28, 1982.

Several of the basic elements of the Settlement Agreement program were incorporated into the Clean Water Act of 1977. This law also makes several other important changes in the Federal water pollution control program.

- Sections 301(b)(2)(A) and 301(b)(2)(C) of the Act now set July 1, 1984 as the deadline for industries to achieve effluent limitations requiring application of BAT for "toxic" pollutants. "Toxic" pollutants here includes the 65 "priority" pollutants and classes of pollutants which Congress declared "toxic" under Section 307(a) of the Act.
- Likewise, EPA's programs for new source performance standards and pretreatment standards are now aimed principally at controlling toxic pollutants.
- To strengthen the toxics control program, Section 304(e) of the Act authorizes the Administrator to prescribe certain "best management practices" ("BMPs"). These BMPs are to prevent the release of toxic and hazardous pollutants from: (1) Plant site runoff, (2) spillage or leaks, (3) sludge or waste disposal, and (4) drainage from raw material storage if any of those events are associated with, or ancillary to, the manufacturing or treatment process.

In keeping with its emphasis on toxic pollutants, the Clean Water Act of 1977 also revises the control program for non-toxic pollutants.

- For "conventional" pollutants identified under Section 304(a)(4) (including biochemical oxygen demand, suspended solids, fecal coliform and pH), the new Section 301(b)(2)(E) requires "effluent limitations requiring the application of the best conventional pollutant control technology" ("BCT")—instead of BAT—to be achieved by July 1, 1984. The factors considered in assessing BCT for an industry are the relationship between the cost of attaining a reduction in effluents and the effluent reduction benefits attained, and a comparison of the cost and level of reduction of such pollutants by publically owned treatment works and industrial sources. For non-toxic, nonconventional pollutants, Sections 301 (b)(2)(A) and (b)(2)(F) require achievement of BAT effluent limitations within three years after their establishment or by July 1, 1984, whichever is later, but not later than July 1, 1987.

The purpose of this regulation is to establish BPT, BAT, NSPS, PSES, and PSNS for the Part 433 Metal Finishing Point Source Category, and to amend the Part 413 Electroplating PSES.

B. Prior EPA Regulations

On March 28, 1974, EPA promulgated BPT limitations for the electroplating industry but suspended them on December 3, 1976. Interim final pretreatment standards for the electroplating industry were issued on July 12, 1977, and suspended on May 14, 1979. On September 7, 1979, EPA promulgated the Part 413 PSES for the electroplating industry. Amended PSES were promulgated on January 28, 1981 (40 FR 9462).

Currently only those Electroplating PSES are in effect. Nonintegrated indirect discharging facilities must comply with those standards by April 27, 1984. See 47 FR 42698, September 28, 1982. A non-integrated facility is one which does not discharge significant process wastewater, other than from electroplating operations, through a treatment system (or proposed treatment system).

Integrated indirect discharging facilities are also currently covered by the electroplating PSES. These facilities, which prior to treatment combine electroplating waste streams with significant process waste streams not covered by the Electroplating Category, must comply with its provisions by June 30, 1984 (see 48 FR 2774, January 21, 1983).

C. Overview of the Industry

There are 13,500 plants in the electroplating/metal finishing industry. Many discharge wastewaters from

several metal finishing operations other than, and in addition to, electroplating. Part 413 (electroplating) currently applies only to flows from the six specified electroplating processes. These Part 433 (metal finishing regulations) will apply to those electroplating streams and also to wastestreams from most other metal finishing operations within the same plants. The Part 433 PSES will apply only to plants already covered by Part 413; however Part 433 will often cover additional wastewater within the same plants. Thus the Part 433 limits on discharge of toxic metals, toxic organics, and cyanide will apply to most facilities in the electroplating/metal finishing industry.

The industry can be divided into the sectors indicated on Table I. Facilities are either "captives" [those which in a calendar year own more than 50% (area basis) of the materials undergoing metal finishing]; or "job shops" (those which in a calendar year do not own more than 50% (area basis) of material undergoing metal finishing).

Captives can be further divided by two definitions: "integrated" plants are those which, prior to treatment, combine electroplating waste streams with significant process waste streams not covered by the electroplating category; "non-integrated" facilities are those which have significant wastewater discharges only from operations addressed by the electroplating category. Many captives (50%) are "integrated" facilities. Whereas captives often have a complex range of operations, job shops usually perform fewer operations. In theory job shops can be divided like captives; in actuality, however, approximately 97% of all job shops in this industry are "non-integrated".

Finally, the entire industry can be divided into "direct" and "indirect" dischargers. "Directs" discharge wastewaters to waters of the United States and are subject to NPDES permits incorporating BPT, BAT, and BCT limitations or NSPS; "Indirects" discharge to POTWs and are subject to PSES or PSNS.

As discussed above, the electroplating/metal finishing industry is currently covered by Part 413 PSES for the Electroplating Category promulgated on September 7, 1979, and amended on January 28, 1981. The effect of today's amendments is to create a new category—Metal Finishing (Part 433)—and to shift *most* electroplaters to it, replacing their current PSES with new limits which apply uniformly to discharges from their electroplating and other metal finishing operations. This meets industry's requests for equivalent limits for process lines often found together and greatly reduces the need to rely on the Combined Waste Stream Formula for integrated metal finishing facilities. Direct discharger and new source requirements are also being issued as part of the metal finishing regulations.

Indirect discharging job shop electroplaters and independent printed circuit board manufacturers, however, would be left under the existing Part 413 PSES for Electroplating and are exempted from Part 433. This is consistent with a 1980 Settlement Agreement in which the National Association of Metal Finishers (NAMF), and the Institute for Interconnecting and Packaging Electronic Circuits (IIPEC) agreed not to challenge the Part 413 PSES in return for the 1981 amendments and EPA's commitment that the Agency did not intend to develop significantly more stringent standards for those plants for the next several years.

TABLE I.—BREAKDOWN OF THE ELECTROPLATING/METAL FINISHING INDUSTRY

[Number of plants per sector (13,470)]

	Job shops and IPCBMA [1] (3,470)	Captive facilities (10,000)	
		Nonintegrated	Integrated
Indirect dischargers (10,561)	3,061 job & IPCBMA indirect.	3,750 nonintegrated captives.	3,750 integrated captives.
Direct dischargers (2,909)	408 job & IPCBMA directs.	(*)	(*)

[1] Independent printed circuit board manufacturers.
[2] 2,500 captive directs.

The Metal Finishing Category covers plants which perform one or more of the following six operations: electroplating, electroless plating, anodizing, coating (phosphating, chromating, and coloring), chemical etching and milling, or printed circuit board manufacture. If a plant performs any of those six operations then discharges from the 46 operations listed in Appendix C are covered by these standards.

In some cases another industrial category may cover wastewater discharges from a metal finishing operation. In such cases the more specific standards of the other Part(s) will apply to those wastewater streams which appear to be covered by both regulations. For example, if a plant performs coating operations in preparation for painting and also performs electroless plating as part of a porcelain enameling process, then these Part 433 standards would apply to discharges from the coating operation; while Part 466 (porcelain enameling) would apply to discharges from the second operation.

The following regulations will take precedence over metal finishing (Part 433) and electroplating (Part 413) when such an overlap occurs:

Nonferrous metal smelting and refining (40 CFR Part 421)
Coil coating (40 CFR Part 465)
Porcelain enameling (40 CFR Part 466)
Battery manufacturing (40 CFR Part 461)
Iron and steel (40 CFR Part 420)
Metal casting foundries (40 CFR Part 464)
Aluminum forming (40 CFR Part 467)
Copper forming (40 CFR Part 468)
Plastic molding and forming (40 CFR Part 463)

In addition, EPA is excluding from the metal finishing (Part 433) regulation: (1) Metallic platemaking and gravure cylinder preparation conducted within printing and publishing facilities; and (2) existing source job shops and independent printed circuit board manufacturers which introduce pollutants into a publicly owned treatment works. As noted above, the standards do not apply to facilities unless they perform at least one of the following: electroplating, electroless plating, anodizing, coating, chemical etching and milling, or printed circuit board manufacture.

The most important pollutants of concern found in metal finishing industry wastewaters are: (1) toxic metals (cadmium, copper, chromium, nickel, lead, and zinc); (2) cyanide; (3) toxic organics (lumped together as total toxic organics); and (4) conventional pollutants (TSS and oil and grease). These and other chemical constituents degrade water quality, endanger aquatic life and human health, and in addition corrode equipment, generate hazardous gas, and cause treatment plant malfunctions and problems in disposing of sludges containing toxic metals.

These plants manufacture a variety of products that are constructed primarily of metals. The operations, which involve materials that begin as raw stock (rods, bars, sheet, castings, forgings, etc.), can include the most sophisticated surface finishing technologies. These facilities include both captives and job shops. They vary greatly in size, age, number of employees, and number and type of operations performed. They range from very small job shops with less than 10 employees to large facilities employing thousands of production workers. Because of differences in size and processes, production facilities are custom tailored to the individual plant. Some complex products may require the

use of nearly all of the 46 unit operations metioned above; a simple product may require only one.

Many different raw materials are used by these plants. Basis materials (or "workpieces") are mostly metals; from common copper and steel to extremely expensive high-grade alloys and precious metals. They can also include plastics. Solutions used in unit operations can contain acids, bases, cyanide, metals, complexing agents, organic additives, oils, and detergents. All these materials may enter waste streams during production.

Water use within the metal finishing industry is discussed fully in Section V of the development document (see summary above). Plating and cleaning operations are typically the biggest water users. While most metal finishing operations use water, some may use none at all. Water use depends heavily on the type—and the flow rate—of the rinsing used. Product quality requirements often dictate the amount of rinsing needed for specific parts. Parts involving extensive surface preparation will generally require larger amounts of water in rinsing.

III. Scope of this Rulemaking

This regulation establishes Part 433 - BPT, BAT, NSPS, PSES, and PSNS for the Metal Finishing Point Source Category and amends Part 413 PSES for the Electroplating Point Source Category. The BAT goal is to achieve, by July 1, 1984, the best available technology economically achievable that will result in reasonable further progress toward the national goal of eliminating the discharge of all pollutants. This regulation does not alter the existing metal and cyanide standards for job shop electroplaters and printed circuit board manufacturers discharging to POTWs.

EPA first studied the electroplating/metal finishing industry to determine whether differences in raw materials, final products, manufacturing processes, equipment, age and size of plants, water use, wastewater constituents, or other factors required separate effluent limitations and standards for different industry subcategories. This study involved a detailed analysis of wastewater discharge and treated effluent characteristics, including, (a) the sources and volume of water, the processes, and the sources of pollutants and wastewater in the plant and (b) the constituents of wastewaters, including toxic pollutants. This analysis enabled the Agency to determine the presence and concentrations of toxic pollutants on the major wastewater discharges.

EPA also identified several distinct control and treatment technologies (both in-plant and end-of-pipe), including those with potential use in the electroplating/metal finishing industry. The Agency analyzed both historical and newly generated data on the performance of these technologies, including their non-water quality environmental impacts on air quality, solid waste generation, water scarcity, and energy requirements.

Cost curves were used to estimate the cost of each control and treatment technology. These cost curves were developed by applying standard engineering analyses to metal finishing wastewater characteristics. Unit process costs were than derived by applying model plant characteristics (production and flow) to the unit cost curve of each treatment process. These unit process costs were added together to yield the total cost at each treatment level.

By considering these factors, EPA was able to characterize the various control and treatment technologies used as the bases for effluent limitations, new source and pretreatment standards. However, the regulations do not require any particular technology. Rather, they require plants to achieve effluent limitations (mg/l) which reflect the proper operation of these technologies or equivalent technologies. Some facilities are already successfully using technologies other than those relied on by the Agency, such as dragout control, recycle, and recovery, to achieve these values.

IV. Data Gathering Efforts

To develop the regulation, EPA began with a review of previous work on the electroplating/metal finishing industry. The major source of information on this is the *Draft Development Document for Effluent Limitations and Standards for the Metal Finishing Point Source Category* (June 1980). Several studies completed before this development document was published also contributed technical information to the metal finishing data base for the following segments of the industry:

- Machinery and Mechanical Products Manufacturing.
- Electroplating.
- Electroless Plating and Printed Circuit Board Manufacturing (Segments of the Electroplating Category).
- Mechanical and Electrical Products.

We also gathered data on the metal finishing industry from literature surveys, inquiries to professional contacts, seminars and meetings, and the survey and evaluation of manufacturing facilities.

We contacted all Federal EPA regions, several State environmental agencies, and numerous suppliers and manufacturers for the metal finishing industry to collect information on: (1) Permits and monitoring data, (2) the use and properties of materials, (3) process chemical constituents, (4) waste treatment equipment, (5) waste transport, (6) and various process modifications to minimize pollutant generation.

Under the authority of Section 308 of the Clean Water Act, the Agency sent three different data collection portfolios (DCPs) to various industries within the Metal Finishing Point Source Category. The first DCP obtained data from 339 of 1,422 plants originally contacted from the machinery and mechanical products industry. The data included general plant information on raw materials consumed, specific processes used, composition of effluent streams, and wastewater treatment. The second DCP obtained data from 365 of the 900 plants originally contacted in the mechanical and electrical products industries. These data covered general plant characteristics, unit operations performed, plating type operations, wastewater treatment facilities, and waste transport. We sent the third DCP to 1,883 companies involved in electroplating. Approximately 1190 plants sent back economic analysis data and information on general plant characteristics, production history, manufacturing processes, process and waste treatment, wastewater characteristics, and treatment costs.

EPA and its contractors also visited 210 manufacturing facilities to collect wastewater samples and pertinent technical information on manufacturing processes and various treatment techniques.

V. Sampling and Analytical Program

EPA focused its sampling and analysis on the toxic pollutants designated in the Clean Water Act. However, we also sampled and analyzed conventional and nonconventional pollutants. Prior to undertaking sampling programs in support of rulemaking actions, EPA had to identify specific toxic pollutants that would be appropriate subjects for investigation. The list of 65 pollutants and classes of pollutants potentially includes thousands of specific compounds, the analyses of which could overwhelm private and government laboratory resources. To make the task more manageable, therefore, EPA selected 129 specific toxic pollutants for study in this rulemaking and other industry rulemakings. The criteria for

choosing these pollutants included the frequency of their occurrence in water, their chemical stability and structure, the amount of the chemical produced, and the availability of chemical standards for measurement.

In addition to the original 129 toxic pollutants (of which three are now considered nonconventional pollutants), EPA checked for the presence, frequency, and concentration of xylenes, alkyl epoxides, gold, fluoride, phosphorus, oil and grease, TSS, pH, aluminum, barium, indium, magnesium, molybdenum, osmium, palladium, platinum, rhodium, ruthenium, sodium, tin, titanium, vanadium, yttrium, and total phenols.

The criteria used to select plants for sampling visits were: (1) A large percentage of the plant's effluent discharge should result from the manufacturing processes listed in Appendix C; (2) the physical layout of plant plumbing should facilitate sampling of the wastewater type under study; (3) the plant must have waste treatment in place; (4) the mix of plants visited should contain discharges to both surface waters and publicly owned treatment works; and (5) the selected plants should provide a representative geographical distribution to avoid a data base that concentrates on a unique geographical condition. EPA sampled 210 facilities to identify pollutants in plant wastewaters. Before visiting a plant, EPA reviewed all available data on manufacturing processes and waste treatment. We selected representative points at which to sample the raw wastewater entering the treatment systems and the final treated effluents. Finally, we prepared, reviewed, and approved a detailed sampling plan showing the selected sample points and the overall sampling procedure.

Based on this sampling plan, we then took samples at each sample point for 1, 2 or 3 consecutive days. The samples were divided into two analytical groups. Within each group the samples were subjected to various analyses, depending on the stability of the pollutants to be analyzed. The various levels of analysis were conducted at: (1) Local laboratories, (2) EPA's Chicago laboratory, (3) contracted gas chromatography/mass spectrometry (GC/MS) laboratories, and (4) the sampling contractor's central laboratory. The sampling and analysis methods are outlined in the Development Document.

The acquisition, preservation, and analysis of the water samples followed the relevant methods set forth in 40 CFR 136. Although the Agency has not promulgated analytical methods for many organic toxic pollutants under Section 304(h) of the Act, a number of these methods have been proposed for 40 CFR 136 (44 FR 69464, December 3, 1979; 44 FR 75028, December 18, 1979).

VI. Industry Subcategorization

In developing this regulation, the Agency considered whether different effluent limitations and standards are appropriate for different segments of the metal finishing industry. The Act requires EPA to consider a number of factors to determine if subcategorization is needed. These factors include raw materials, final products, manufacturing processes, geographical location, plant size and age, wastewater characteristics, non-water-quality environmental impacts, treatment costs, energy costs, and solid waste generation.

The metal finishing industry comprises 45 unit operations. These processes generate wastewater that falls into five waste groups, each requiring different treatment to reduce the discharge of pollutants. The five groups are metals, cyanide, hexavalent chromium, oils, and solvents, with significant toxic organics pollutants potentially present in the last two.

These wastes occur in a wide variety of combinations. Throughout the industry, however the wastestreams are alike in one critical sense: they all respond similarly to the treatment system which is already most widely used in the industry. That system was selected as EPA's model technology. Its major components, i.e., precipitation and clarification, are used for all waste streams. After isolated treatment of hexavalent chromium, cyanide, and oil and grease, pollutants in these waste streams are further reduced by passage through the precipitation-clarification system which is also used for metal-bearing wastes.

The Agency has determined that the Metal Finishing Point Source Category need not be subcategorized for regulation. A set of concentration based limitations, based on the performance capabilities of the model technology, can be applied to all metal finishing process effluents.

EPA has, however decided to exempt indirect discharging job shops and independent printed circuit board manufacturers from the Part 433 PSES. This has an effect similar to placing them in a separate subcategory. As noted above, this is consistent with the 1980 Settlement Agreement in which the National Association of Metal Finishers promised to withdraw its legal challenge to those Part 413 PSES if EPA did not, for the next several years, make them significantly more stringent.

The Agency considered, but decided against production based standard. With the wide range of operations, product quality requirements, existing process configurations, and difficulties in measuring production, no consistent production normalizing relationship could be found. Concentration based limits, however, can be consistently attained throughout the industry.

VII. Available Wastewater Control and Treatment Technology

A. Status of In-Place Technology

Installed control and treatment technologies in the metal finishing industry generally consist of some form of alkaline precipitation and clarification installed at "end-of-pipe" to remove metals. When cyanide or hexavalent chromium wastes are present, these wastewaters are generally segregated and treated upstream.

B. Control Treatment Options

We examined the following control treatment options:

Option 1: Precipitation and clarification. Stream segregation for cyanide, hexavalent chromium and concentrated oily wastes followed by cyanide destruction, chromium reduction and emulsion breaking skimming as necessary. Solvent waste segregation and removal by hauling.

Option 2: Option 1 plus filtration.

Option 3: Option 1 plus in-plant control for cadmium.

VIII. General Criteria for Effluent Limitations

A. BPT Effluent Limitations

The factors considered in defining best practicable control technolgy currently available (BPT) include: (1) The total cost of applying the technology relative to the effluent reductions that result, (2) the age of equipment and facilities involved, (3) the processes used, (4) engineering aspects of the control technology, (5) process changes, (6) non-water-quality environmental impacts (including energy requirements), (7) and other factors, as the Administrator considers appropriate. In general, the BPT level represents the average of the best existing performances of plants within the industry of various ages, sizes, processes, or other common characteristics. When existing performance is uniformly inadequate, BPT may be transferred from a different subcategory or category. BPT focuses on

end-of-pipe treatment rather than process changes or internal controls, except when these technologies are common industry practice.

The cost/benefit inquiry for BPT is a limited balancing of costs versus benefits, committed to EPA's discretion, which does not require the Agency to quantify benefits in monetary terms. See e.g., *American Iron and Steel Institute* v. *EPA*, 526 F. 2d 1027 (3rd Cir. 1975). In balancing costs against the benefits of effluent reduction, EPA considers the volume and nature of existing discharges, the volume and nature of discharges expected after application of BPT, the general environmental effects of the pollutants, and the cost and economic impacts of the required level of pollution control. The Act does not require or permit consideration of water quality problems attributable to particular point sources, or water quality improvements in particular bodies of water. Therefore, EPA has not considered these factors. See *Weyerhaeuser Company* v. *Costle*, 590 F. 2d 1011 (D.C. Cir. 1978).

B. BAT Effluent Limitations

The factors considered in defining best available technology economically achievable (BAT) include the age of the equipment and facilities involved, the processes used, engineering aspects of the control technology, process changes, non-water-quality environmental impacts (including energy requirements), and the costs of applying such technology (Section 304(b)(2)(B)). The BAT level represents the best economically achievable performance of plants of various ages, sizes, processes, or other shared characteristics. As with BPT, uniformly inadequate performance within a category or subcategory may require transfer of BAT from a different subcategory or category. Unlike BPT, however, BAT may include process changes or internal controls, even when these technologies are not common industry practice.

The statutory assessment of BAT "considers" costs, but does not require a balancing of costs against effluent reduction benefits (see *Weyerhaeuser* v. *Costle*, *supra*). In developing BAT, however, EPA has given substantial weight to the reasonableness of costs. The Agency has considered the volume and nature of discharges, the volume and nature of discharges expected after application of BAT, the general environmental effects of the pollutants, and the costs and economic impacts of the required pollution control levels.

Despite this expanded consideration of costs, the primary factor for determining BAT is the effluent reduction capability of the control technology. The Clean Water Act of 1977, establishes the achievement of BAT as the principal national means of controlling toxic water pollution from direct discharging plants.

C. BCT Effluent Limitations

The 1977 amendments added Section 301(b)(2)(E) to the Act, establishing "best conventional pollutant control technology" (BCT) for discharges of conventional pollutants from existing industrial point sources. Section 304(B)(4) specified the following as conventional pollutants: BOD, TSS, fecal coliform, and pH. The Administrator designated oil and grease as "conventional" on July 30, 1979, 44 FR 44501.

BCT is not an additional limitation but replaces BAT for the control of conventional pollutants. In addition to other factors specified in section 304(b)(4)(B), the Act requires that BCT limitations be assessed in light of a two part "cost-reasonableness" test. *American Paper Institute* v. *EPA*, 660 F. 2d 954 (4th Cir. 1981). The first test compares the cost for private industry to reduce its conventional pollutants with the costs to publicly owned treatment works for similar levels of reduction in their discharge of these pollutants. The second test examines the cost-effectiveness of additional industrial treatment beyond BPT. EPA must find that limitations are "reasonable" under both tests before establishing them as BCT. In no case may BCT be less stringent than BPT.

EPA published its methodology for carrying out the BCT analysis on August 29, 1979, (44 FR 50732). In the case mentioned above, the Court of Appeals ordered EPA to correct data errors underlying EPA's calculation of the first test, and to apply the second cost test. (EPA had argued that a second cost test was not required).

BCT limitations for this industry were proposed on October 29, 1982 (47 FR 49176). They were accompanied by a proposed methodology for the general development of BCT limitations. BCT limits for this industry will be promulgated with, or soon after, the promulgation of the final methodology for BCT development. At that time EPA will respond to relevant comments filed in either that rulemaking or in this one.

D. New Source Performance Standards

The basis for new source performance standards (NSPS) under Section 306 of the Act is the best available demonstrated technology. New plants have the opportunity to design the best and most efficient metal finishing processes and wastewater treatment technologies. Therefore, Congress directed EPA to consider the best demonstrated process changes, in-plant controls, and end-of-pipe treatment technologies that reduce pollution to the maximum extent feasible.

E. Pretreatment Standards for Existing Sources

Section 307(b) of the Act requires EPA to promulgate pretreatment standards for existing sources (PSES), which industry must achieve within three years of promulgation. PSES are designed to prevent the discharge of pollutants which pass through, interfere with, or are otherwise incompatible with the operation of POTW's.

The legislative history of the 1977 Act indicates that pretreatment standards are to be technology-based, analogous to the best available technology for removal of toxic pollutants. The General Pretreatment Regulations which serve as the framework for the final metal finishing pretreatment standards are in 40 CFR Part 403, 46 FR 9404 (January 28, 1981).

EPA has generally determined that there is pass through of pollutants if the percent of pollutants removed by a well-operated POTW achieving secondary treatment is less than the percent removal by the BAT model treatment system. A study of 40 well-operated POTW's with biological treatment and meeting secondary treatment criteria showed that regulated metals are typically removed at rates varying from 20 to 70%. POTWs with only primary treatment have even lower rates of removal. In contrast, BAT level treatment by metal finishing industrial facilities can achieve removals of approximately 97% or more. Thus it is evident that metals from this industry do pass through POTW's. As for toxic organics, data from the same POTWs illustrate a wide range of removal, from 0 to greater than 99%. Overall POTW's have removal rates of toxic organics which are less effective than the metal finishing TTO technology basis of no dumping of toxic organic wastes. The POTW's effluent discharge of specific toxic pollutants ranged from 0 to 4.3 milligrams/liter. Many of the pollutants present in metal finishing wastes, at sufficiently high concentrations, can inhibit biodegradation in POTW operations. In addition, a high concentration of toxic pollutants in the sludge can limit POTW use of sludge management alternatives, including the beneficial use of sludges on agricultural lands.

Section 307 of the Clean Water Act provides that POTW's may grant credit to indirect dischargers, based on the degree of removal actually achieved at the POTW. EPA has General Pretreatment Regulations regulating POTWs' authority to grant such credits.

A Federal Register notice of September 23, 1982 explained EPA's latest data and proposed national removal credits for well operated POTW's achieving the national secondary treatment limits. See 47 FR 42698. That proposal is not being relied on in this rulemaking; however if such credits are available the costs of today's standards could be sustantially reduced.

F. Pretreatment Standards for New Sources

Section 307(c) of the Act requires EPA to promulgate pretreatment standards for new sources (PSNS) at the same time that it promulgates NSPS. These standards are intended to prevent the discharge of pollutants which pass through, interfere with, or are otherwise incompatible with a POTW. New indirect dischargers, like new direct dischargers, have the opportunity to incorporate the best available demonstrated technologies—including process changes, in-plant controls, and end-of-pipe treatment technologies—and to select plant sites that ensure the treatment system can be adequately installed. Therefore, the Agency sets PSNS after considering the same criteria considered for NSPS. PSNS will have effluent reduction benefits similar to NSPS.

IX. Summary of Final Regulations

In the electroplating/metal finishing industry, the pollutants of concern are cadmium, chromium, copper, lead, nickel, silver, zinc, cyanide, toxic organics, TSS, oil and grease, and pH. The treatment option selected for each effluent limitation, pretreatment standard and new source performance standard is based on the criteria specified in the Clean Water Act. The technologies are discussed in more detail in the Development Document for this rulemaking.

A. Part 433

The pollutants being regulated under BPT limitations are cadmium, copper, chromium, nickel, lead, silver, zinc, total cyanide, TSS, oil and grease and pH. Total toxic organics (TTO) is also being regulated. Compliance with the TTO limit basically involves not dumping concentrated toxic organic wastes, e.g., solvent degreasers and paint strippers. Other sources are generally small, infrequent, and of low concentrations.

For BPT, EPA is setting limits achievable by technology based on precipitation and clarification for all metal finishing effluents. In addition, for cyanide or hexavalent chromium the technology basis incorporates techniques to destroy cyanide and reduce hexavalent chromium to its trivalent state. These effluent limitations reflect the average of the best existing control technologies widely used in the industry and remove approximately 97.5 percent of the raw waste of toxic metals and cyanide, and 99 percent of the toxic organics discharged. The technology is consistent with that used as a basis for PSES for the electroplating industry (January 28, 1981, 40 FR 9462) and the March 28, 1974, suspended, BPT limitations. The limitations are derived in the manner discussed in the following section. They are generally more stringent than those found in currently effective electroplating pretreatment regulations, because EPA is now using a revised and updated data base.

For BAT, EPA is establishing limitations for the toxic pollutants and at a level equivalent to BPT. The Agency seriously considered setting BAT and BAT-level PSES limitations based on BPT level technology plus filtration. Filtration would have led to an additional capital cost of almost $1.2 billion. In light of the statutory mandate to consider cost in setting BAT, EPA decided to reject the filtration option, because of its very high aggregate cost on a nationwide basis. We did not select in-plant cadmium control because it can require significant re-engineering of process water flow and of product and equipment handling, on a plant-by-plant basis. The changes vary widely and in many cases could be difficult for existing plants to apply. The compliance date for BAT is no later than July 1, 1984, the maximum time allowed by the Act.

For NSPS, EPA is establishing limitations based on BPT/BAT technology plus in-plant control of cadmium. This additional control takes advantage of a new plant's ability to achieve effluent reductions of 69% beyond BAT cadmium levels. The pollutants regulated under NSPS are the same as those regulated under BPT limitations.

For PSES in the Metal Finishing Category, limitations are based on technology equivalent to BAT and BPT. The pollutants regulated under this PSES are the same as the toxic pollutants regulated under BPT (BAT) limitations. A study of 40 well-operated POTWs with biological treatment and meeting secondary treatment criteria showed that regulated metals and cyanide are typically removed at rates varying from 20 to 70%. POTWs with primary treatment have even lower rates of removal. In contrast, metal finishing PSES-level treatment can achieve removals of approximately 97%. Thus it is evident that metals and cyanide from this industry do pass through POTWs. As for toxic organics, data from the same POTWs illustrates a wide range of removal, from 0% to greater than 99%. Overall POTWs have removal rates of toxic organics which are less effective than the metal finishing TTO technology basis of no dumping of toxic organic wastes. The POTWs effluent discharge of specific toxic pollutants ranged from 0 to 4.3 mg/l. Many of the pollutants present in metal finishing wastes at sufficiently high concentrations can inhibit biodegradation in POTW operations. In addition, a high concentration of toxic pollutants in the sludge can limit POTW use of sludge management alternatives, including the beneficial use of sludges on agricultural lands.

The compliance date for the metal finishing PSES is February 15, 1986 for metals, cyanide, and TTO. Agency analysis indicates that facilities can plan, design, and install the necessary equipment in 31 months, which will be allowed by the specified compliance date. There is also a June 30, 1984 compliance date for an interim toxic organic limit, which can be met by in-house management and handling controls.

For PSNS, limitations are based on technology equivalent to NSPS. The pollutants regulated under PSNS are the same as the toxics regulated under NSPS. As with PSES, these pollutants are necessary for control in PSNS to prevent pass through, interference, and sludge contamination.

B. Part 413

Indirect discharging job shops and independent printed circuit board manufacturers will continue to be regulated under the existing PSES for Electroplating. This is consistent with a 1980 Settlement Agreement in which the National Association of Metal Finishers and the Institute for Interconnecting and Packaging Electronic Circuits agreed not to challenge the Part 413 pretreatment standards for existing source electroplaters, in return for the 1981 amendments and an EPA commitment that, in light of their economic vulnerability, EPA did not plan to develop significantly more stringent standards for those plants for the next several years.

Control of toxic organics is being added to the requirements for facilities under the Electroplating PSES. Examination of the technology requirements, costs, economic impact, and timing indicates that requiring control of toxic organics is consistent with the Settlement Agreement.

First, it will not increase the economic vulnerability of job shops or independent printed circuit board manufacturers. Compliance with the toxic organic standards can be achieved by good management practices (i.e., not dumping waste solvents into the wastewaters). No additional end-of-pipe technology (beyond that already required by Part 413) is necessary. Economic analyses reveal that control of toxic organics does not impose significant additional costs or impacts.

Second, these facilities are being allowed 3 years to comply with the toxic organic standard. Thus, even if control of TTO were considered "more stringent", the time allowed for compliance will amount to 6 years from the date of the Settlement Agreement. That fulfills the Agency's obligation not to develop more stringent standards for these facilities in the next several years.

X. Derivation of the Limitations

EPA began development of these standards by building on the information obtained in developing the Electroplating Pretreatment Standards. For Metal Finishing, 2783 companies were contacted as part of two surveys (one of 1190 plants and the other of 365 plants) and 1555 useable questionaire responses were obtained. The Agency also selected 322 plants for visits and/or obtained long term self-monitoring data on them.

The data gathering effort was the basis for the Agency's first two critical determinations. First, pursuant to Section 307(b) of the Act, EPA identified those pollutants that would pass through or interfere with a POTW, or its sludge. Second, EPA discovered that a basic and "classic" pollution control technology was widely practiced in the industry. The system is designed to remove toxic metals from raw wastestreams and it has two principal components—precipitation and clarification. Of 1190 surveyed plants, 689 reported treatment present, of these, 428 facilities practiced the precipitation of metals through pH adjustment of wastewater.

EPA then analyzed the data to discover what those classic and commonly used treatment devices could achieve. For each regulated pollutant EPA looked for two key figures: The average concentration that properly operated technology would achieve over time, and the variability from that average that would be inevitable even at well-operated plants.

To find long-term concentration averages, EPA examined its file of 322 plants which had been visited and/or had sent long-term self-monitoring data to EPA. Of these plants EPA had sampled 72 with precipitation and clarification. After deletions for improper treatment, dilution, and low raw waste concentrations, 30 plants (sampled by EPA from 1 to 6 days) were used for developing the long-term concentration averages. For these plants, EPA had obtained detailed information on treated and untreated (raw) wastewater characteristics.

For most pollutants the average of this data was used for the long-term average. EPA sampled data for cadmium and lead appeared too low to represent the range of raw wastes in the industry. For these parameters EPA used available self-monitoring data to calculate the long-term average. Although the Agency has less information on which to judge the adequacy of treatment in the self-monitoring data, these higher values were used by the Agency to compensate for the relatively low raw waste cadmium and lead at EPA sampled plants. The average of the self-monitoring data for lead and cadmium was used for the long-term average.

The regulations specify daily and monthly average maximums. Thus, the limits are developed from the Agency assessment of long term concentration averages multiplied by variability factors. If a plant intends to consistently comply with the regulatory limit it should use the long term concentration average as the basis for design and operation. The following long-term concentration averages were found to be attainable by the technology EPA assessed, and were costed in this rulemaking. They are presented here as guidance to dischargers and control authorities:

Long Term Concentration Averages

Pollutant or pollutant property	Long term concentration average milligrams per liter (mg/l)
Cadmium (T)	0.13
Chromium (T)	0.572
Copper (T)	0.815
Lead (T)	0.20
Nickel (T)	0.942
Silver (T)	0.096
Zinc (T)	0.549
Cyanide (T)	0.18
Cyanide, A	0.06

Long Term Concentration Averages—Continued

Pollutant or pollutant property	Long term concentration average milligrams per liter (mg/l)
Oil & Grease	11.8
TSS	11.16.8
TTO (raw wastes)	1.08
TTO (effluent)	0.434

Variability factors were determined by looking at variations that have occurred in the past. This requires multiple observations at single treatment systems. The self-monitoring data collected by EPA provided approximately 12,000 self-reporting observations which were used to derive variability factors. The variability factors were derived by estimating 99th percentiles based on a lognormal distribution, and then dividing those numbers by the average. These Part 433 metal finishing standards are based on the variability expected for one-day and one-month time periods. The monthly variability factors were derived assuming the monthly average was comprised of ten daily observations.

Finally, the Agency multiplied the resulting variability factor by the expected long-term concentration averages. The results were effluent concentration limits based on actual observations of well-operated plants which allowed for the variability observed at all types of reporting facilities. EPA has assessed the cost of this regulation on the assumption that plants design and operate to meet these long term concentration averages. The final limits represent limits which a well-designed and operated plant should meet approximately 99% of the time. If a plant designs and operates its treatment system to achieve the long-term concentration average and reasonable control fluctuations, then it should have very little expectation of exceeding the promulgated limit for each sampling of the discharge.

XI. Changes From the Proposed Limits

As previously stated the limitations are derived using long-term averages and variability factors. Both of these items underwent some changes between proposal and promulgation.

With regard to long-term concentration averages only slight changes were made. Additional data were added to the data base for lead and zinc, and one plant's data for cadmium were excluded due to complexing problems. The long-term concentration average for lead changed

from 0.17 to 0.20 mg/1, zinc changed from 0.582 to 0.549 mg/1, and cadmium changed from 0.19 to 0.13 mg/1.

The derivation of the proposed TTO limit did not distinguish differences between plants. Comments suggested that plants with certain processes should be allowed a higher limit. EPA in response, examined grouping of plants by sources of TTO: e.g. those that perform solvent degreasing, and/or painting. Plants which performed both solvent degreasing *and* painting had higher raw waste TTO than any other process group. The final TTO limit is based on that process grouping, which is a conservative assumption since it had the highest background concentration. Furthermore, EPA is now promulgating two TTO limits for plants covered by Part 433. The first is based solely on background levels found prior to end-of-pipe treatment. It must be met by June 30, 1984, except that plants covered by Part 420 (iron and steel) need not meet it until July 10, 1985. The second TTO limit is based on effluent data and takes into account the additional removals achieved by end-of-pipe treatment. This second limit must be met by February 15, 1986. Most facilities should be able to meet this limit after installing end-of-pipe treatment to meet the electroplating PSES of Part 413. However Part 433 allows the period until February 15, 1986, in case additional process streams present special compliance problems.

For PSES, job shops and independent printed circuit board manufacturers are regulated only under Part 413. They will have until July 15, 1988 to comply with TTO. Thus "several years" will have followed the Settlement Agreement of 1980.

In calculating variability factors, changes were made to both the daily maximum variability and thirty day variability. First, the daily maximum variability was calculated in the proposal by using lognormal statistics for plants with less than 100 sampling days and a nonparametric procedure for plants reporting 100 or more observations. For the final regulation the Agency found that the larger data sets had a good fit to the lognormal distribution. Thus the Agency is using the lognormal procedure for all data sets. Second, 30 day limits based on the average of 30 samples have been replaced with a monthly average based on 10 samples per reporting period. This is consistent with other recent Effluent Guidelines for similar industrial categories.

In addition, the Agency responded to comments that the statistical methodology used in proposal did not predict percent exceedances of the 30 day limits consistently with the 99% criterion used to derive the limits. The main reason for this was that day to day dependence in the data was not accounted for in deriving the proposed limits. In deriving the 10 sample monthly limits, the Agency examined data dependence in three ways. First, by fitting the data to a statistical time-series model; second, by incorporating direct computations of auto-correlations into derivations of the limits; and third, by fitting observed sequences of 10 day averages to a lognormal distribution. The final monthly limits were determined by fitting observed sequences of 10 day averages to a lognormal distribution because this provided the most satisfactory fit to the data. The general effect of these statistical changes was to raise some limits.

Another change is that an alternative amenable cyanide limit is made available to facilities with significant forms of cyanide (i.e., iron cyanides) not controllable by the technology basis.

XII. Pollutants and Subcategories not Regulated

Paragraph 8 of the Settlement Agreement contains provisions authorizing EPA to exclude toxic pollutants and industry categories and subcategories from regulation under certain circumstances.

A. Exclusion of Toxic Pollutants

Paragraph 8 (a) (iii) of the Settlement Agreement authorizes the Administrator to exclude from regulation toxic pollutants:

- Not detectable by Section 304(h) analytical methods or other state-of-the-art methods; or
- Present in amounts too small to be effectively reduced by available technologies; or
- Present only in trace amounts and neither causing nor likely to cause toxic effects; or
- Detected in the effluent from only a small number of sources within a subcategory and uniquely related to those sources; or
- That will be effectively controlled by technologies on which other effluent limitations and standards are based.

Appendix B to this notice indicates the reason for the exclusion of each toxic pollutant excluded from regulation on the basis of the paragraph 8 criteria.

B. Exclusion of Subcategories

In selecting effluent limitations for the Metal Finishing category as a whole, EPA has not established subcategories and, therefore, has not excluded any subcategories from toxic pollutant regulation. However, as discussed above, job shops and IPCBMs which are existing indirect dischargers remain subject to the less stringent Part 413 requirements.

XIII. Costs, Effluent Reduction Benefits, and Economic Impact

A. Cost and Economic Impacts

The economic impact assessment of this regulation is presented in *Economic Impact Analysis of Effluent Standards and Limitations for the Metal Finishing Industry*. The analysis details the investment and annual costs that the industry will incur as a result of this regulation. The report assesses the impact of effluent control costs in terms of plant closures, unemployment effects, and increases in the costs of production.

Since proposal, the economic impact analysis has been revised to reflect changes warranted on the basis of comments received and as a result of continued EPA review. Monitoring and compliance costs associated with the control of the regulated pollutants have been estimated for each industry sector and are presented below. Also, the economic analysis has been revised to reflect a current nominal cost of capital of 13 percent versus the 10 percent originally used. In addition, the Economic Analysis was revised to more clearly present supporting data from elsewhere in the record. Finally, the indirect discharging captive facilities with flows less than 10,000 gallons per day have been included in the analysis. Costs and impacts for this group are presented separately below. This industry group was inadvertently omitted from the earlier economic impact analysis.

In order to measure the potential economic impact, EPA reviewed its incremental effect on each of the sectors of the industry (described above in the "Overview of the Industry," and Table 1). These impacts are presented separately below for direct and indirect discharging facilities by job shop, independent printed circuit board shop and captive shop facilities. The incremental combined investment and annual costs, which include interest and depreciation, for all metal finishing facilities incurring costs are $351 million and $118 million respectively. These costs are in 1982 dollars, as are those presented below. No plant closures or employment effects are projected. Increases in the cost of production average 0.02 percent. If all 10,409 facilities using end-of-pipe treatment technologies are required by the

municipalities and permit writers to monitor 10 days per month, the total annual costs increase by $61 million from $118 million to $179 million. No closures or employments effects are projected to result from this level of monitoring; the average increase in cost of production would be 0.03 percent versus the 0.02 percent presented above. The Agency has determined that this regulation would be economically achievable even if all facilities are required to monitor 10 days a month. No measureable balance of trade effect is expected from this regulation due to the estimated small change in the price of metal finishing products.

BPT

Direct discharging facilities are not expected to incur costs to comply with the metals and cyanide limitations because these facilities are already covered by NPDES permits which set BPT limits on case-by-case best engineering judgments. A 1981 survey of randomly selected permits indicates that nearly all existing permits specify limits equivalent to, or more stringent than, those contained in this regulation.

Direct discharging facilities may incur costs to comply with the limitation on total toxic organics. EPA assessed TTO compliance costs on the assumption that all plants would incur baseline monitoring costs of $1,904 on a one time basis. EPA believes that almost all plants will then comply through the certification process. Nevertheless, EPA assumed that those facilities which currently dump would not be able to use the certification process and would incur annual compliance costs. (This same procedure was used for TTO compliance under PSES.) EPA has assumed that the annual BPT compliance costs could be $29,000 for job shops, $34,700 for independent printed circuit board manufacturers and $468,000 for captive shop facilities. These costs apply to 10 out of 365 direct discharging job shops, 12 out of 44 direct discharging independent printed circuit board manufacturers, and 162 out of 2,500 direct discharging captive shop facilities. Increases in the cost of production resulting from the control of TTO are not expected to exceed 0.9 percent. No closure or employment effects are projected for these sectors.

BAT

Since the BAT limitations are the same as the BPT limitations, there is no incremental cost or impact associated with compliance with the BAT limitations.

PSES

Indirect discharging job shop and independent printed circuit board facilities are expected to incur costs only to comply with the TTO limitation which is being added to the electroplating pretreatment standards in Part 413. This TTO limitation is included in the regulation because compliance will significantly reduce toxic organic pollution and will cause negligible economic impacts on these industry sectors. EPA is not imposing metals and cyanide limitations more stringent than those specified in the existing applicable pretreatment standards despite evidence that such limits can be reliably achieved by the technology that forms the basis of the current standards. This is consistent with a March 1980 Settlement Agreement in which the relevant trade associations agreed not to challenge the Part 413 pretreatment standards for existing source electroplaters.

Approximately 77 of an estimated 2,734 indirect discharging job shops and 88 of the 327 indirect independent printed circuit board manufacturers are assumed to incur costs to comply with the TTO standard. Annual costs of $222,500 and $254,300 respectively are projected for the two sectors. The average annual cost per facility to comply with the TTO limitations is approximately $2900, primarily for sampling and analysis. No closures or employment effects are projected for these sectors. Production cost increases are expected not to exceed 0.03 percent for the two sectors.

Non-integrated indirect discharging captive facilities with effluent flows greater than 10,000 gallons per day are assumed to incur additional costs to comply with the TTO standard. Control of metals and cyanide can be achieved through capital investment already required by currently effective electroplating regulations. Although the metals and cyanide standards promulgated today are more stringent than those in the currently effective electroplating regulations, they can be met through use of the same pollution control equipment relied on to meet the electroplating pretreatment standards. The $167,600 of annual costs associated with control of TTO applies to 58 of the 900 nonintegrated captive indirect dischargers with flow greater than 10,000 gpd. No closure or divestitures are expected to occur.

Non-integrated indirect discharging captive facilities with flows less than 10,000 gallons per day will incur costs from both the metals and cyanide standards and the TTO standards. Unlike the prior group with flows greater than 10,000 gpd, this group was generally exempt from Part 413's precipitation/clarification based pretreatment standards. Their inclusion in the metal finishing standard could necessitate investments in both end-of-pipe and in-plant treatment technologies. The cost for these facilities to comply with the metals and cyanide standards totals $11.8 million annually. These costs apply to 912 out of an estimated 2850 nonintegrated indirect discharging captive facilities with flows less than 10,000 gpd. Data indicate that the remainder of these plants already have adequate treatment in place. The annual cost to comply with the TTO standard is $534,600; this applies to 185 facilities. The average increase in the cost of production is approximately one percent. No closure or employment impacts are projected.

Of the 3,750 facilities in the last industry sector, integrated indirect discharging captives, 1,200 may incur aggregate costs of $104 million annually to comply with the metals and cyanide standards and 243 of these facilities may incur costs of approximately $705,000 annually to comply with the TTO standard. Integrated shops perform metal finishing operations in addition to electroplating processes. Thus, they are affected by the existing electroplating standards as well as by today's regulation. EPA anticipates that the integrated facilities will comply with the metal finishing standards by treating their total process discharge through a single treatment system that would be more costly than the one required solely to treat electroplating wastewaters.

The costs indicated above reflect the additional costs of complying with the metal finishing standard; the electroplating costs were reviewed in an earlier regulation 40 CFR Part 413, 44 FR 52590, September 7, 1979 and they serve as the baseline for determining the impacts of the metal finishing regulation. To determine the baseline costs required to comply with the electroplating pretreatment standards, EPA first revised its earlier estimates, based on updated surveys of treatment in place, improved estimates of the population of affected captive shops, and calculated costs attributed to the electroplating flow of integrated captive indirect dischargers. The revised estimate (in 1982 dollars) indicates that this sector's costs for compliance with the electroplating pretreatment standards are $512 million in capital costs and $169 million in annual costs, including interest and depreciation. EPA now estimates that the major economic

effects of that regulation would be 24 plant closures and six electroplating divestitures which could result in 896 job losses and 84 job transfers.

In estimating the economic impact of today's metal finishing regulation, EPA assessed the costs of treating the additional flows covered by today's regulation at the model plants used in the electroplating analysis. The costs used in conducting the economic impact analysis reflect the cost of treating all process flows, expect for the six electroplating process streams specified in Part 413. To the extent these flows include processes not regulated under metal finishing, the costs and resulting impacts overstate the effect of the metal finishing regulation.

EPA's estimates of the effects of these regulations are based on a sample of approximately 1,100 plants. The results have been extrapolated to the full population of 3,750 plants in this sector. For each model plant the analysis determines the incremental increase in the costs of production to comply with the metal finishing standards. If a plant's compliance costs relative to sales are high, the analysis projects metal finishing process line divestitures or plant closures. Additional impacts, thus, are those due to today's metal finishing regulation only. Investment costs are expected to total approximately $351 million, while annual costs are projected to be approximately $118 million, including interest and depreciation. The annual costs represent approximately 0.20 percent of the $60 billion annual value of shipments from integrated indirect captive plants. EPA's analysis projects that this would lead to no plant closures or process line divestitures, and that no employment disruption would result. The TTO portion of these total annual costs shown above is approximately $705,000. TTO costs apply to 243 of the 3750 integrated indirect discharging captive facilities.

Finally, EPA assessed the combined impact of today's regulation and the electroplating pretreatment regulation on the captive integrated indirect discharging sector of the industry. This analysis, like those for electroplating and metal finishing alone, was based on costs for the treatment technology used for the development of the limitations. Some plants may receive removal credits or install less expensive technology. In addition, EPA has deferred the compliance date for integrated facilities, thereby allowing plants additional time to plan for compliance and not be subject to treatment costs. This analysis indicated that the combined investment for the captive integrated indirect discharging sector for both regulations was $827 million, with annual costs of $274 million, including interest and depreciation. Thirty plants (out of 3,750) might divest their electroplating lines or close, and 980 jobs (out of 450,000) could be lost or displaced. These impacts are the same as those due to the electroplating pretreatment standards alone. No additional closures, divestitures, or unemployment effects are expected from the more stringent standards promulgated today.

NSPS and PSNS

Finally, the requirements for new sources are the same as those for existing sources, except that cadmium must be controlled more stringently. The incremental cost of compliance with the cadmium control ranges from $14,000 to $24,000 per facility depending on the water flow. These costs represent between 0.02 and 2.0 percent of projected value of sales for these facilities. Since cadmium plating occurs at only about 15% of the facilities and in-plant controls can be designed into new facilities, there is expected to be no competitive disadvantage for new sources seeking to enter the industry.

Total Toxic Organics

EPA's economic analysis of the TTO limit had its own costing methodolgy. Its results were incorporated into the impact analyses for the other specified limits. EPA believes, however, that a certification procedure will make these costs unnecessary in almost all cases.

The Agency is offering the certification procedure as an alternative to self-monitoring because frequent monitoring for toxic organics could be expensive. Under the certification procedures facilities can identify the toxic organics used and certify that the resultant wastes are being properly disposed, i.e., recovered or contract hauled. The Agency expects that almost all plants will certify.

Some plants may still be required to monitor. However, estimating the number of facilities that may still be required to monitor TTO must be accomplished indirectly, because there is no history to indicate how control authorities will apply toxic organic requirements and certification alternatives to monitoring. The Agency examined two indicators of the need to require monitoring. The first was the percentage of plants that currently dump waste solvent degreasers. This percentage may approximate the population size that control authorities need to check. Only 24% of the captives use solvent degreasing, which is the primary source of potential toxic organic violations in these wastewaters. Comparable figures are 10.3% for job shops and 100% for printed circuit board manufacturers.

These wastes can profitably be recovered by the plant and some waste haulers, who pay for waste solvents, have been identified, and are cited in the public record. Approximately 73% of the facilities which utilize solvent degreasers, already properly dispose of this waste. However even the 27% of the population who now dump their solvents will probably stop that practice and be eligible for certification. In addition some of the solvent degreasers that these plants use do not contain any toxic organics. Other sources of toxic organics present at metal finishing plants may compensate for the Agency's conservative assessment on degreasing but this should not be significant since dumped solvent degreasers are clearly the single most significant source of TTO in wastewaters. Thus this approach leads to a conservative overestimation by the Agency.

The second approach was to examine the percentage of EPA sampled data which exceeded the TTO limit and to consider this as a measure of the fraction of facilities needing monitoring. This was 2.8 percent of the data (i.e., 97.4% of sampled data already complies with the TTO limit). The 2.8 percent exceedance rate of the TTO limit during EPA's sampling supports the need for certification and for control authorities to establish reasoned plant specific monitoring frequencies.

For purposes of economic analyses the number of facilities costed for TTO monitoring was estimated to be equivalent to the number of facilities currently dumping solvents. The economic impact analysis also performed two sensitivity analyses. The first was with a greater number of plants monitoring for TTO. The second assumed that plants monitored for TTO monthly instead of quarterly. Both changes led to only slightly different impacts. All scenarios were found to be acceptable and economically achievable.

Summary

The Agency concludes that the final regulation is economically achievable, and the impacts are justified in light of the effluent reductions achieved. The metal finishing regulation will remove an additional 20 million pounds per year of metals and cyanide and 10 million pounds per year of toxic organics.

B. Executive Order 12291

Under Executive Order 12291 the Agency must determine whether a regulation is "Major" and therefore subject to the requirements of a Regulatory Impact Analysis. Major rules impose an annual cost to the economy of $100 million or more or meet other economic impact criteria. Based on the Agency's estimates this regulation could have an annual effect on the economy of more than $100 million, making it a major regulation.

Executive Order 12291 does not require a Regulatory Impact Analysis where its consideration would conflict with the development of regulations pursuant to a court order, as with this metal finishing regulation. EPA has prepared, however, an analysis that contains many of the elements of a Regulatory Impact Analysis. A copy of the analysis can be obtained from Alec McBride, Monitoring and Data Support Division, WH-553, U.S. EPA, 401 M Street, S.W., Washington, D.C. 20460.

C. Regulatory Flexibility Analysis

Pub. L. 96-354 requires that a Regulatory Flexibility Analysis be prepared for regulations that have a significant impact on a substantial number of small entities. The analysis may be done in conjunction with, or as part of, any other analysis conducted by the Agency.

A small business analysis is included in the economic impact analysis. This analysis shows that there will not be a significant impact on any segment of the industry, large or small. Therefore a formal Regulatory Flexibility Analysis was not required.

D. SBA Loans

The agency is continuing to encourage small plants—including circuit board manufacturers—to use Small Business Administration (SBA) financing as needed for pollution control equipment. The three basic programs are: (1) The Guaranteed Pollution Control Bond Program, (2) the Section 503 Program, and (3) the Regular Guarantee Program. All the SBA loan programs are only open to businesses that have: (a) net assets less than $6 million, and (b) an average annual after-tax income of less than $2 million, and (c) fewer than 250 employees.

For further information and specifics on the Guaranteed Pollution Control Bond Program contact: U.S. Small Business Administration, Office of Pollution Control Financing, 4040 North Fairfax Drive, Rosslyn, Virginia 22203 (703) 235-2902.

The Section 503 Program, as amended in July 1980, allows long-term loans to small and medium sized businesses. These loans are made by SBA approved local development companies. These companies are authorized to issue Government-backed debentures that are brought by the Federal Financing Bank, an arm of the U.S. Treasury.

Through SBA's Regular Guarantee Program, loans are made available by commercial banks and are guaranteed by the SBA. This program has interest rates equivalent to market rates.

For additional information on the Regular Guarantee and Section 503 Programs contact your district or local SBA Office. The coordinator at EPA headquarters is Ms. Frances Desselle who may be reached at (202) 382-5373.

XIV. Non-Water-Quality Environmental Impacts

The elimination or reduction of one form of pollution may aggravate other environmental problems. Sections 304(b) and 306 of the Act require EPA to consider the non-water-quality environmental impacts (including energy requirements) of certain regulations. To comply, EPA considered the effect of this regulation on air, noise, radiation, and solid waste generation. While balancing pollution problems against each other and against energy use is difficult, EPA believes that the final regulation best serves overall national goals.

The following are the non-water-quality environmental impacts (including energy requirements) associated with today's regulation.

A. Air Pollution

Compliance with the BPT, BAT, NSPS, PSES, and PSNS will not create any substantial air pollution problems. Alkaline chlorination for cyanide destruction and chromium reduction using sulfur dioxide may produce some emissions to the atmosphere. Precipitation and clarification, the major portion of the technology basis, should not result in any air pollution problems. In addition, control of total toxic organics at the source will result in a decrease in the volatilization of solvents from streams and POTWs.

B. Noise

None of the wastewater treatment processes cause significant objectionable noise.

C. Radiation

None of the treatment processes pose any radiation hazards.

D. Solid Waste

EPA has considered the effect these regulations would have on the accumulation of hazardous waste, as defined under Section 3001 of the Resource Conservation and Recovery Act (RCRA). EPA estimates that the BPT and BAT limitations will not contribute to additional solid or hazardous wastes. However, PSES will increase the solid wastes from these plants by approximately 165,000 metric tons per year. This sludge can be hazardous because it will necessarily contain additional quantities (and concentrations) of toxic metal pollutants. Disposal of these wastes was costed as though they were hazardous.

EPA's Office of Solid Waste has analyzed the solid waste management and disposal costs required by the industry's compliance with RCRA requirements. Some results were published in 45 FR 33066 (May 19, 1980). In addition, RCRA costs have been included in the costs and economic impact analysis during the development of this regulation. However, since November 1980, EPA has received 196 petitions to delist wastes from metal finishing facilities. Seventy-seven have been granted, 104 are pending and 15 have been rejected. Thus it appears that the decision to cost all solid waste disposal as hazardous probably overstated likely costs. Furthermore, the Agency has not assessed the savings likely to occur because of reduced contamination of POTW sludges. Those savings are likely to be considerable.

E. Energy Requirements

EPA estimates that achieving the BPT and BAT effluent limitations will not increase electrical energy consumption.

The Agency estimates that PSES will increase electrical energy consumption by approximately 142 million kilowatt-hours per year. For a typical existing indirect discharger, this will increase energy consumption less than one percent of the total energy consumed for production.

The energy requirements for NSPS and PSNS are estimated to be similar to energy requirement for BAT. However, this can only be quantified in kwh/year after projections are made for new plant construction.

XV. Best Management Practices (BMPs)

Section 304(e) of the Clean Water Act authorizes the Administrator to prescribe "best management practices" ("BMPs"). EPA may develop BMPs that apply to all industrial sites or to a designated industrial category, and may offer guidance to permit authorities in

establishing management practices required by unique circumstances at a given plant.

Although EPA is not prescribing them at this time, future BMPs could require dikes, curbs, or other measures to contain leaks and spills, and could require the treatment of toxic pollutants in these wastes.

XVI. Upset and Bypass Provisions

A recurring issue is whether industry limitations and standards should include provisions that authorize noncompliance during "upset" or "bypasses." An upset, sometimes called an "excursion," is unintentional noncompliance beyond the reasonable control of the permittee. EPA believes that upset provisions are necessary, because upsets will inevitably occur, even if the control equipment is properly operated. Because technology-based limitations can require only what technology can achieve, many claim that liability for upsets is improper. When confronted with this issue, courts have been divided on the questions of whether an explicit upset or excursion exemption is necessary or whether upset or excursion incidents may be handled through EPA's enforcement discretion. Compare *Marathon Oil Co.* v. *EPA*, 564 F. 2d 1253 (9th Cir. 1977) with *Weyerhaeuser* v. *Costle, supra* and *Corn Refiners Association, et al.* v. *Costle*, No. 78-1069 (8th Cir. April 2, 1979). See also *American Petroleum Institute* v. *EPA*, 540 F. 2d 1023 (10th Cir. 1976); *CPC International, Inc.* v. *Train*, 540 F. 2d 1320 (8th Cir. 1976); *FMC Corp.* v. *Train*, 539 F. 2d 973 (4th Cir. 1976).

Unlike an upset—which is an unintentional episode—a bypass is an intentional noncompliance to circumvent waste treatment facilities during an emergency.

EPA has both upset and bypass provisions in NPDES permits, and the NPDES regulations include upset and bypass permit provisions. See 40 CFR Part 122.41, 48 FR 14151, 14168 (April 1, 1983). The upset provision establishes an upset as an affirmative defense to prosecution for violation of technology-based effluent limitations. The bypass provision authorizes bypassing to prevent loss of life, personal injury, or severe property damage. Since permittees in the metal finishing industry are entitled to the upset and bypass provisions in NPDES permits, this regulation need not repeat these provisions. Upset provisions are also contained in the general pretreatment regulation.

XVII. Variances and Modifications

Federal and State NPDES permits to direct dischargers must enforce these effluent standards. The pretreatment limitations apply directly to indirect dischargers.

The only exception to the BPT effluent limitations is EPA's "fundamentally different factors" variance. See *E. I. duPont de Nemours and Co.* v. *Train, supra; Weyerhaeuser Co.* v. *Costle, supra*. This variance recognizes characteristics of a particular discharger in the category regulated that are fundamentally different from the characteristics considered in this rulemaking. Although this variance clause was set forth in EPA's 1973–1976 industry regulations, it need not be included in this regulation. See 40 CFR Part 125.30.

Dischargers subject to the BAT limitations are also eligible for EPA's "fundamentally different factors" variance. BAT limitations for nonconventional pollutants may be modified under Sections 301(c) and 301(g) of the Act. These statutory modifications do not apply to toxic or conventional pollutants. According to Section 301(j)(1)(B), applications for these modifications must be filed within 270 days after promulgation of final effluent limitations and standards. See 43 FR 40859 (Sept. 13, 1978). These Part 413 and Part 433 regulations do not regulate any non-conventional, non-toxic, pollutants. If any of the regulated pollutants are declared non-toxic, and non-conventional in the future, then dischargers may seek 301(c) or 301(g) modifications.

Indirect dischargers subject to PSES are eligible for the "fundamentally different factors" variance and for credits for toxic pollutants removed by POTW. See 40 CFR 403.7; 403.13; 46 FR 9404 (January 28, 1981). Indirect dischargers subject to PSNS are only eligible for the credits provided for in 40 CFR 403.7. New sources subject to NSPS are not eligible for EPA's "fundamentally different factors" variance or any statutory or regulatory modifications. See *E. I. duPont de Nemours* v. *Train, supra*.

XVIII. Implementation of Limitations and Standards

A. Relation to NPDES Permits.

The BPT, BAT, and NSPS in this regulation will be applied to individual metal finishing plants through NPDES permits issued by EPA or approved State agencies under Section 402 of the Act. The preceding section of this preamble discussed the binding effect of this regulation on NPDES permits, except when variances and modifications are expressly authorized. This section adds more detail on the relation between this regulation and NPDES permits.

EPA has developed the limitations and standards in this regulation to cover the typical facility for this point source category. In specific cases, the NPDES permitting authority may have to establish permit limits on toxic pollutants that are not covered by this regulation. This regulation does not restrict the power of any permit-issuing authority to comply with law or any EPA regulation, guideline, or policy. For example, if this regulation does not control a particular pollutant, the permit issuer may still limit the pollutant on a case-by-case basis, when such action conforms with the purposes of the Act. In addition, if State water quality standards or other provisions of State or Federal law require limits on pollutants not covered by this regulation (or require more stringent limits on covered pollutants), the permit-issuing authority *must* apply those limitations.

B. Indirect Dischargers

For indirect dischargers, PSES and PSNS are implemented under National Pretreatment Program procedures outlined in 40 CFR Part 403. The table below may be of assistance in resolving questions about the operation of that program. A brief explanation of some of the submissions indicated on the table follows:

A "request for category determination request" is a written request, submitted by an indirect discharger or its POTW, for a certification on whether the indirect discharger falls within a particular subcategory listed in a categorical pretreatment standard. This assists the indirect discharger in knowing just which PSES or PSNS limits it will be required to meet. See 40 CFR 403.6(a).

A "request for fundamentally different factors variance" is a mechanism by which a categorical pretreatment standard may be adjusted, making it more or less stringent, on a case-by-case basis. If an indirect discharger, a POTW, or any interested person believes that factors relating to specific indirect discharger are fundamentally different from those factors considered during development of the relevant categorical pretreatment standard and that the existence of those factors justifies a different discharge limit from that specified in the categorical standard, then they may submit a request to EPA for such a variance. See 40 CFR 403.13.

A "baseline monitoring report" is the first report an indirect discharger must file following promulgation of a standard applicable to it. The baseline report includes: an indentification of the indirect discharger; a description of its operations; a report on the flows of regulated streams and the results of sampling analyses to determine levels of regulated pollutants in those streams; a statement of the discharger's compliance or noncompliance with the standard; and a description of any additional steps required to achieve compliance. See 40 CFR 403.12(b)

A "report on compliance" is required of each indirect discharger within 90 days following the date for compliance with an applicable categorical pretreatment standard. The report must indicate the nature and concentration of all regulated pollutants in the facility's regulated process wastestreams; the average and maximum daily flows of the regulated streams; and a statement of whether compliance is consistently being achieved, and if not, what additional operation and maintenance and/or pretreatment is necessary to achieve compliance. See 40 CFR 403.12(d)

A "periodic compliance report" is a report on continuing compliance with all applicable categorical pretreatment standards. It is submitted twice per year (June and December) by indirect dischargers subject to the standards. The report shall indicate the precise nature and concentrations of the regulated pollutants in its discharge to the POTW; the average and maximum daily flow rates of the facility; the methods used by the indirect discharger to sample and analyze the data, and a certification that these methods conformed to those methods outlined in the regulations. See 40 CFR 403.12(e)

TABLE 2.—INDIRECT DISCHARGERS SCHEDULE FOR SUBMITTAL AND COMPLIANCE

Item/event	Applicable sources	Date or time period	Measured from	Item submitted to
Request for category determination.	Existing	60 days	From effective date of standard.	Director [1]
		or 60 days	From FEDERAL REGISTER Development Document Availability.	
	New	Prior to commencement of discharge to POTW		
Request for fundamentally different factors variance.	All	180 days	From effective date of standard.	Director. [1]
		or 30 days	From final decision on category determination.	
Baseline monitoring report	All	180 days	From effective date of standard or final decision on category determination.	Control authority [2]
Report on compliance	Existing	90 days	From date for final compliance.	Control authority [2]
	New	90 days	From commencement of discharge to POTW.	
Periodic Compliance Reports	All	June and December.		Control authority [2]

[1] Director = a) Chief Administrative Officer of a State water pollution control agency with an approved pretreatment program or b) EPA Regional Water Division Director, if State does not have an approved pretreatment program

[2] Control Authority = a) POTW if its pretreatment program has been approved or b) Director of State water pollution control agency with an approved pretreatment program or c) EPA Regional Administrator, if State does not have an approved pretreatment program.

C. Applicability and Compliance Dates

In the electroplating/metal finishing industry some facilities are subject to the Electroplating Category (Part 413) and/or the Metal Finishing Category (Part 433). Table 3 below illustrates which of the regulations are applicable to the various types of facilities. Facilities are subject only to Part 433 (metal finishing) for BPT, BAT, NSPS, and PSNS. For PSES, facilities generally fall within the applicability of both Parts, although, for each pollutant, only one Part will apply at a given time. There are two exceptions: (1) Existing indirect discharging job shops and IPCBMs have been exempted from the Part 433 Metal Finishing PSES, and (2) metal finishing wastewaters at iron and steel mills are exempted from the Part 413 Electroplating PSES.

TABLE 3.—APPLICABILITY

	Job shops	IPCBM	Captives	Metal finishing at iron and steel mills [1]
PSES.				
Electroplating (Part 413)	x	x	x	
Metal Finishing (Part 433)			x	x
BPT, BAT, NSPS, PSNS:				
Metal Finishing	x	x	x	x

[1] Electroplating process wastewater at iron and steel mills was excluded from the Electroplating PSES by 40 CFR 413.01. Flows from the metal finishing processes at those plants are covered by 40 CFR 433.

The compliance dates for the two categories are presented in Table 4. BPT, BAT, PSNS, and NSPS compliance dates are specified by the Clean Water Act. The compliance dates for Electroplating PSES were set in the Federal Register on September 23, 1982. See 47 FR 42898. Today's regulation allows facilities 3 years to comply with the Electroplating PSES for toxic organics consistent with the Settlement Agreement with NAMF. For metal finishing, the Agency is allowing 31 months for compliance with all parameters. In addition an interim TTO limit has been established for compliance by June 30, 1984; except for metal finishing wastewaters from plants which are also subject to Part 420 (iron and steel), which must comply by July 10, 1985. This last exception is pursuant to a settlement agreement with the steel industry in which EPA agreed that pretreatment requirements would apply to steel discharges in July 1985. It is possible that control of TTO in metal finishing waste streams could, in some cases, lead steel facilities to install treatment technology on the discharge from their steel processes. Therefore, EPA has decided to allow plants covered by Part 420 until June, 1985 to comply with the TTO limit.

TABLE 4.—COMPLIANCE DATES

Regulation	Compliance date
Electroplating PSES for	April 27, 1984 (for nonintegrated plants).
Metals and Cyanide (Part 413).	June 30, 1984 (for integrated plants).
Electroplating PSES (Part 413) for TTO.[1].	July 15, 1986.
Metal Finishing BPT (Part 433).	As soon as possible.
Metal Finishing BAT	July 1, 1984.
Metal Finishing PSES for TTO.[1].	June 30, 1984 (except for plants covered by Part 420); July 10, 1985 (for plants covered by Part 420).
Metal Finishing PSES for Metals, Cyanide and TTO.[2]	February 15, 1986.
Metal Finishing NSPS and PSNS.	From commencement of discharge.

[1] For these facilities the first TTO limit is based on management practices only.
[2] This TTO limit is based on management practices followed by certification/certification.

D. Enforcement

A final topic of concern is the operation of EPA's enforcement program. This was an important consideration in developing this regulation. EPA deliberately sought to avoid standards which would be exceeded by routine fluctuations of well-designed and operated treatment systems. These standards were developed so as to represent limits which such a plant would meet approximately 99% of the time.

The Clean Water Act is a strict liability statute. EPA emphasizes, however, that it can exercise discretion in deciding to initiate enforcement proceedings (*Sierra Club* v. *Train*, 557 F. 2d 485, 5th Cir., 1977). EPA has exercised, and intends to exercise, that discretion in a manner that recognizes and promotes good-faith compliance.

XIX. Summary of Public Participation

At the time of publication of the proposed metal finishing regulation (August 31, 1982), EPA solicited comments on the proposed rules and, in particular, on six specific issues. Ninety-one commenters responded to these and other issues relating to the electroplating and metal finishing standards. The following parties submitted comments:

Air Transport Association of America
Alpha Industries Inc.
The Aluminum Association Incorporated
American Airlines
American Foundrymen's Society
American Hot Dip Galvanizers
American Metal Stamping Association
Anerock Corporation
Anaconda Aluminum Company
Ansul Fire Protection
Apollo Metals, Inc.
American Telephone and Telegraph Company
Atwood
Babcock and Wilcox
Bausch and Lomb
California Metal Enameling Co.
Caterpillar Tractor Company
Charles A. Frawley
Chrysler Corp.
Control Data Corporation
County Sanitation Districts of Los Angeles County
Cumberland Corporation
D.A.B. Industries, Inc.
Deere and Company
Delta Airlines, Inc.
Department of the Air Force
Eaton Corporation
E. I. DuPont de Nemours and Co.
Eltech Systems Corp.
EMP Laboratories, Incorporated
EPA Region V
ERC-Lancy
Federal-Mogul Corporation
Ferro Corporation
Ford Motor Co.
General Electric Company
General Motors Corporation
Goodyear Aerospace Corporation
Goodyear Tire and Rubber Co.
Gould Electronics and Electrical Products
GTE Services Corporation
GWS Technology, Inc.
Harris Corporation
Harvey Hubbell Incorporated
Hofmann Industries Incorporated
Honeywell
Halogenated Solvent Industry Alliance
Huntington Alloys
Imperial Clevite, Inc.
Institute for Interconnecting and Packaging Electronic Circuits
ITT Telecommunications Corporation
Jenn-Air Corporation
Jayto Corporation
Kaiser Aluminum and Chemical Corporation
Masco Corporation
Manufacturing Association of Central New York
Maytag
Metal Finishing Association of Southern California
Metro Municipality of Metropolitan Seattle
Midland Ross Corporation
Milwaukee Metropolitan Sewerage District
3M Company
Mobay Chemical Corporation
Modine Manufacturing Company
National Association of Metal Finishers
National Electrical Manufacturers' Association
New York State Department of Environmental Conservation
Northern Telecom
Ozark Airlines
PCK Technology Division
PEC Industries
Pioneer Metal Finishing, Inc.
Porcelain Enamel Institute
Porcelain Metals Corporation
Praegitzer Industries Inc.
Raytheon Company
Republic Airlines
Rexnord
Reynolds Aluminum
Rockford Area Chambers of Commerce
R.R. Donnelley and Sons
Sanders Associates Inc.
Sanitary District of Rockford
Sperry Corporation
Square D Company
State of Connecticut Department of Environmental Protection
State of Vermont Agency of Environmental Conservation
State of Wisconsin Department of Natural Resources
United Airlines

78-05459

An in-depth, cross-flow separation technique for the removal of suspended solids from wastewaters.

Sundaram, T. R.; Santo, J. E.; Shapira, N. I.
Hydronautics, Inc., Applied Science Dept.

INDUSTRIAL WATER ENGINEERING 15(1), 9-10, 12-18, Coden: IWEGAA Publ.Yr: Jan.-Feb. 1978
illus. refs.
Abs.
Languages: ENGLISH
Doc Type: JOURNAL PAPER

Results are presented from small-scale tests on the microfiltration of a variety waste effluents utilizing microporous tubes (Hydroperm), developed by Hydronautics, Incorporated. These thick-walled, tubular microfilters, which can be made from many common thermoplastics (such as polyethylene and nylon), enable almost the total removal of SS even at very low (about 5 psi) filtration pressures. The unique feature of the tubes is that their pore structure can be controlled during the production process; thus, optimum filtration performance is obtained for different waste effluents by tailoring the tubes to the characteristics of a given effluent under consideration, through a series of systematic, laboratory screening tests. Some results on dewatering of waste sludges produced as an end product of other treatment methods like dissolved air flotation are also described. The filtration technique is also capable of heavy metal removal from waste streams provided that the metals can be precipitated in the hydroxide form by lime addition or by some other appropriate chemical treatment. Tests with battery-waste effluents containing 7 to 8 ppm Pb indicated that the Pb level in the permeate was reduced to 0.018 ppm. (AM)

Descriptors: Suspended solids; Effluent treatment; Pollutant removal; Filtration; Industrial effluents; Heavy metals; Sludge dewatering; Filter media; Engineering; Filters; Hydraulics
Identifiers: Hydroperm

78-05378

Investigation of ion exchange treatment of acid mine drainage.

Wilmoth, R. C ; Scott, R. B.; Kennedy, J. L.
EPA, Industrial Environmental Research Lab., Cincinnatti, OH 45268

Seventh symposium on coal mine drainage research Louisville, Ky. Oct. 18-20, 1977
Seventh symposium on coal mine drainage research: Papers pp. 88-106 Publ.Yr: 1977
Publ: Washington, D.C. National Coal Association
illus. refs.
No abs.
Languages: ENGLISH
Doc Type: CONFERENCE PAPER

In the Sul-biSul ion exchange process, the sulfate form of a strong-acid anion exchanger is used. The acidic nature of the acid mine drainage (AMD) converts the sulfate on the resin to the monovalent bisulfate ion, freeing a resin exchange site which may then be occupied by another anion. At Smith Township, a strong-acid cation exchanger is coupled to the Sul-biSul anion exchanger. The effluent from the cation process-chiefly sulfuric acid (H_2SO_4)-is treated by the anion column to remove the free mineral acid of the AMD and the end product, after chlorination, meets potable standards. The Desal process incorporates a weak-base anion exchange resin which operates in the bicarbonate form to convert metal sulfates to their bicarbonates, capable of being precipitated by Al and Fe^{+3}. Lime treatment removes the remaining cations, except Na. Another process uses 2 resins-an H^+-form, strong-acid cation exchanger, and a weak-base anion exchanger in the free-base (OH^-) form. In the cation column, H^+ are exchanged for the metal ions of the AMD, leaving the cation effluent predominantly H_2SO_4 with residual concentrations of metals. The effluent then enters the weak-base anion exchanger, where the acid is absorbed by the resin. As the anion effluent contains residual levels of Fe and Mn, it is lime-neutralized to pH 9-10, filtered, and adjusted to neutrality. Either hydrochloric acid or H_2SO_4 may be used to regenerate the cation column, producing a waste stream of excess H_2SO_4 and sulfates of Fe, Al, Na, Mn, Ca, and Mg. Regeneration of the anion exchanger is effected with sodium hydroxide, and produces a waste stream composed mainly of sodium sulfate. (FT)

Descriptors: Mine drainage; Ion exchange; Potable waters; Pollutant removal; Chemical reactions; Ions; Resins; Acidic wastes; Wastewater treatment
Identifiers: Sul-biSul process; Desal process

78-05312
Quality and treatment of coal pile runoff.
Cox, D. B ; Chu, T. -Y. J.; Ruane, R. J.
TVA, Div. of Environmental Planning, 246 401 Bldg., Chattanooga, TN 37401
Third symposium on coal preparation Louisville, Ky. Oct. 18-20, 1977
Third symposium on coal preparation: Papers pp. 252-275
Publ Yr: 1977
Publ: Washington, D.C. National Coal Association
illus. refs.
No abs
Languages. ENGLISH
Doc Type: CONFERENCE PAPER
The water quality of coal pile drainage is affected by the leaching of oxidation products of metallic sulfides associated with the coal. Runoff treatment methods of 2 TVA plants (J and E) are summarized. A rainfall-runoff relationship can be used to estimate detention basin design and to calculate acid loads to ash ponds. The pH of the drainage from the 2 plants was similar despite a difference in the S content of their coal supplies, but acidity was higher at plant J despite the similar pHs. Concentrations of TDS were somewhat higher at plant J; most of the dissolved solids were sulfates. Iron concentrations at both plants are lower in range and mean than values encountered by other investigators; Mn levels were comparable or lower to those found in previous work. Lead, Ba, and Ti were low or below the limits of detection; most trace element mean concentrations at plant J are 3-8 times as high as those at plant E. Mercury concentrations exceeded EPA water quality criteria at both plants, while As and Se exceeded criteria only at plant J. Other metal ion concentrations are below the limits of toxicity. Transfer of the drainage to an ash pond for neutralization and precipitation appears to provide adequate treatment. (FT)
Descriptors: Runoff; Wastewater treatment; Electric power plants; Water quality measurements; Coal; Storage; Leaching; pH; Heavy metals; Precipitation
Identifiers: coal storage piles

78-05311
Treatment of precipitation runoff from coal storage piles.
Ferraro, F. A.
American Electric Power Service Corp., Environmental Engineering Division, P.O Box 487, Canton, OH 44701
Third symposium on coal preparation Louisville, Ky. Oct. 18-20, 1977
Third symposium on coal preparation. Papers pp. 243-251
Publ Yr: 1977
Publ. Washington, D.C National Coal Association
illus. no refs.
No abs.
Languages. ENGLISH
Doc Type: CONFERENCE PAPER
Precipitation runoff from coal storage piles can produce wastewater containing objectionable amounts of acidity, metals, and suspended particulates. At the Belpre Coal Dock on the Ohio River, it was decided to treat the runoff by lime neutralization, aeration, and settling of precipitated calcium sulfate, metallic oxides, and hydroxides. From rainfall data from a nearby weather station, it was determined that a treatment rate of 45 gpm with a recycle of a portion of the treated wastewater and sludge would produce the desired effluent and sludge density from the runoff from the 7.5 acres of the storage area. Runoff is diverted to a 207,000-gal equalization basin. It then flows into the concrete treatment sump where 2% lime slurry is added on demand from a pH controller. The treated water is pumped to a 79,000-gal, 2-compartment settling basin; the clarified water is decanted and discharged to the Ohio River. Both equalization and settling basins are clay-lined to prevent seepage into groundwater. To create a denser sludge, a portion of the neturalized wastewater is diverted back to the inlet of the treatment sump. A sludge density of 30%-40% is thus obtained. At power plants, the sludge is burned with the coal. Final effluent from the runoff treatment has a pH of 6.5-7.5, J1 mg/l Fe, greater alkalinity than acidity, and J20 mg/l TSS. In a similar facility handling western coal, only SS need be treated. The system consists of primary settling and collection ponds, a chemical treatment unit to add alum coagulant, and a 2-compartment settling basin. (FT)
Descriptors: Runoff; Wastewater treatment; Coal; Storage; Neutralization; Sedimentation; Settling basins; Sludges; Precipitation
Identifiers. coal storage piles; storm water runoff

78-04507

Physical-chemical unit operations for the treatment of wood preserving wastewaters.

Averill, D W.; Schmidtke, N. W.; Netzer, A.
Fisheries and Environment Canada, Environmental Protection Service, Wastewater Technology Centre, P.O. Box 5050, Burlington, Ont. L74 4A6, Can.

Technology transfer seminar on the timber processing industry Toronto, Ont., Can. Mar. 10-11, 1977
Technology transfer seminar on the timber processing industry: Proceedings. In CANADA. WATER POLLUTION CONTROL DIRECTORATE. ENVIRONMENTAL PROTECTION SERVICE REPORT SERIES. ECONOMIC AND TECHNICAL REVIEW REPORT EPS 3-WP-78-1 pp. 63-107 Publ.Yr: Jan. 1978
Illus. numerous refs.
No abs.
Languages: ENGLISH
Doc Type: CONFERENCE PAPER

The 3 elements of wastewater treatment process design are removal of pollutants which form unstable suspensions, removal of pollutants which form stable suspensions, and removal of pollutants in solution. Gravity separators remove 60%-90% of settleable and floatable materials and separate those materials which are lighter and heavier than water. Dissolved air flotation can remove N95% of free oil and some emulsified oil. Granular media filtration removes N95% of free oil; subsequent separation of oil and creosote from the backwash water is required. Coagulation, followed by sedimentation, flotation, or filtration, removes about 95% of emulsified oil, N90% of COD, most of the pentachlorophenol, and some phenol. Flotation and filtration require less land area than sedimentation. Flotation may be more effective for thickening. Filtration requires a separate backwash storage and separation tank if the backwash water is not returned to the head of the plant and clarified in the separator. Heating is effective for treatment of water in oil emulsions by evaporation. Chemical reduction and precipitation can produce total residual metal ion concentrations J1 mg/l. Chemical oxidation and precipitation can produce residual As concentrations 0.5 mg/l. Chemical oxidation removes phenol and pentachlorophenol. Adsorption on activated carbon can result in effluent concentrations J1 mg/l for many wastewater constituents including phenol and pentachlorophenol. Adsorption requires a relatively high degree of pretreatment to prevent fouling of the carbon surface. Solvent extraction can remove phenol and pentachlorophenol from wastewaters, and provide the potential for direct reuse of reclaimed pentachlorophenol. (MS)

Descriptors: Physicochemical treatment; Lumber industry wastes; Industrial effluents; Effluent treatment; Sedimentation; Flotation; Coagulation; Filtration; Reduction; Chemical oxidation; Adsorption; Solvent extraction; Activated carbon; Oils; Organic compounds
Identifiers: wood preservatives; phenols

78-04471

Treatment of plating wastes from the automotive industry.

Cullinane, M. J., Jr.; Dietz, J. D.
Clark, Dietz and Assoc.-Engineers, Inc.

INDUSTRIAL WASTES 24(2), 29-32, Coden: INWABK Publ.Yr. Mar.-Apr. 1978
Illus. no refs.
Sum.
Languages: ENGLISH
Doc Type: JOURNAL PAPER

Water conservation measures recommended for a Mississippi plant include using spring-loaded shutoff nozzles on water hoses, collecting and returning steam condensate for boiler water makeup, using recycled water in the buffing process, and using counterflow rinsing in the plating operation. Several wastewater segregation practices were also recommended. To meet federal standards, the most cost-effective effluent treatment was reduction followed by chemical precipitation. Complete treatment and direct discharge was more cost effective than pretreatment and discharge to the municipal waste system. The optimum rinse system is a modified countercurrent system with 5 rinse tanks, which reduced water consumption from K400 gpm to J60 gpm. Features incorporated in the treatment design include addition of an acid feeding system for raw waste pH adjustment and use of the abandoned oxidation pond to equalize shock loadings. The treatment process included the following: reduction of Cr+6 in a continuous flow system; equalization of flow wastes; raw waste pumping; pH adjustment in a flash mix tank; and coagulation and settling in a reactor-clarifier. Provision is made for future addition of filters and final pH adjustment. Vacuum filtration and landfilling is the chosen method of sludge disposal. Problems since plant startup in March 1977 have been minimal. Water consumption could be reduced a further 40%-50% if recycle systems and more stringent water conservation measures were used, but these measures do not appear to be economically justified at the present. (FT)

Descriptors: Mississippi; Automotive industry wastes; Metal finishing industry wastes; Chromium compounds; Water conservation; Wastewater treatment; Wastewater treatment plants; Industrial effluents; Reduction; Coagulation

78-04274
Application and determination of organic polymers.
Wang, L. K.; Wang, M. H.; Kao, J-F.
Stevens Inst. of Technology, Castle Pt. Station, Hoboken, NJ 07030
WATER, AIR, AND SOIL POLLUTION 9(3), 337-348, Publ.Yr: Apr. 1978
illus. numerous refs.
Abs.
Languages: ENGLISH
Doc Type: JOURNAL PAPER
Various applications of water-soluble and water-dispersible polymers in the fields of environmental, chemical, and biomedical engineering are reviewed. Cationic electrolytes are powerful primary coagulants because the colloidal matters in natural systems are generally negatively charged. They can be used not only for water purification and sewage treatment but also for oil-water separation, corrosion control, flocculation of Fe-ore slimes, improvement of lime precipitation processes, clarification of titanium sulfate liquor, removal of heavy metals, killing of viruses, dredging treatment, and industrial wastewater treatment. In water quality control, nonionic polymers usually function as coagulant aids, coating the floc particles so that when flocs collide, they adhere and form larger masses. Anion polymers are negatively charged and in the water softening process, where precipitation particles are positively charged, can function as primary coagulants. In general, in the titration of cationic polyelectrolytes, polyvinyl-sulfuric acid potassium is used as a standard titrant. The cationic polyelectrolyte shows a light blue color in the presence of Toluidine Blue O dye (TBO), and the blue color turns bluish purple at endpoint. In the titration of anionic electrolytes, 1,5-dimethyl-1,5-diazaundecamethylene polymethobromide is used, and the anionic polyelectrolyte shows a bluish color in the presence of TBO, which turns light blue at endpoint. (FT)
Descriptors: Polymers; Anions; Cations; Wastewater treatment ; Water treatment; Coagulants; Water pollution control; Chemical analysis
Identifiers: polyelectrolytes; Toluidine Blue O

78-03975
New processes and technology alert.
Anonymous
CHEMICAL ENGINEERING 85(2), 141-151, Coden: CHEEA3 Publ.Yr: Jan. 16, 1978
no refs.
Sum.
Languages. ENGLISH
Doc Type: JOURNAL PAPER
The user, features, current status, and salient remarks are tabulated for the following new products and processes: ammonium sulfite from flue gas desulfurization; carbon black from high temperature pyrolysis of tires; automotive lubrication oil reclaimed by solvent extraction and distillation; synthetic natural gas produced by fluidized-bed coal gasification, coal gasification, fixed-bed coal gasification, and the COGAS process; reclaimed rubber by high-speed comminution; aerosol removal by sound wave bombardment; drinking water purification by adsorption; Hg recovery by chemical treatment; fluegas treatment for sulfite-pulping boilers by scrubbing; heavy metal removal from waste by sulfide precipitation; nuclear waste disposal by ion exchange and by vitrification; odor abatement in kraft pulp mills by in-digester oxidation; particulate removal from flue gas by electrostatic precipitation; sludge drying by toroidal dryer; solvents recovery; sulfate removal from titanium oxide waste by flocculation and by neutralization; sulfur dioxide removal from stack gases by membrane electrodialysis and by scrubbing; trinitrotoluene removal by surfactant treatment; vapor recovery by carbon adsorption; waste incineration by molten-salt combustion; wastewater purification by biological treatment; wastewater sterilization by oxygenation, carbon adsorption, and irradiation, and by UV oxidation; bleached pulp by nonsulfur pulping; coal combustion by fluidized bed; flue gas conditioning by sulfur trioxide generator; river oxygenation by boat mounted O2 separation plants; and reverse osmosis by membrane. Several other processes involving inorganic chemicals, metals, organic chemicals, petroleum and fuels, plastics, etc. are discussed. (SS)
Descriptors: Technology; Chemicals; Petroleum; Fuels; Coal gasification; Industrial plants; Air pollution control; Water pollution control

78-03331
Sodium bicarbonate helps metal plant meet Federal standards.
Barber, N. R.
Church and Dwight Co. Inc., P.O. Box 369 Piscataway, NJ 08854
INDUSTRIAL WASTES 24(1), 26, 29, Coden: INWABK Publ.Yr: Jan.-Feb. 1978
illus. no refs.
No abs.
Languages: ENGLISH
Doc Type: JOURNAL PAPER
Treatment of toxic metal wastes with sodium bicarbonate (NaHCO3) precipitates the metals and holds the pH at optimum level. The treatment appears to be cost-effective, based on theoretical studies of metal precipitation with hydroxides and carbonates. Although NaHCO3 is not as efficient in removing metal from solution as some other bases, it has the advantage of neutralizing excess acidity and thus helps meet wastewater discharge standards. The use of NaHCO3 in place of lime eliminates many of the problems associated with the handling and application of lime. Since the NaHCO3 acts as a buffer to maintain alkalinity near the optimum level, treatment plants can be of a simpler design. Because this buffering action is automatic, there is no need for complicated pH measurement and application control systems. In small to moderate size systems, a dose of bicarbonate once or twice a day should maintain pH at optimum levels for metal precipitation. Although NaHCO3 treatment does not precipitate all metals it can be mixed with a suitable carbonate to increase its range. A principle advantage of the bicarbonate-carbonate mixture is that it can be used to maintain an optimum pH over long periods of time despite varying levels of effluent pH and of metal in the effluent For industrial plants in the 200,000 gpd-500,000 gpd range, bicarbonate treatment systems may be cost-effective (FT)
Descriptors: Metals; Wastewater treatment; Industrial effluents; Precipitation; Effluent treatment; Chemical treatment
Identifiers: sodium bicarbonate

78-03330
Aluminum manufacturer removes chromium.
Anonymous
INDUSTRIAL WASTES 24(1), 24, 34, Coden: INWABK Publ.Yr: Jan.-Feb. 1978
illus. no refs.
No abs
Languages: ENGLISH
Doc Type: JOURNAL PAPER
A New Hampshire aluminum company installed a Hussong/Couplan Chrome Removal Treatment System to treat its raw effluent. The effluent contains 164 mg/l total Cr, 136 mg/l hexavalent Cr, 620 mg/l total P, and 22.8 mg/l Al. The decision was based on 2 factors. The system reduced the pollutants to the lowest concentrations in the final effluent and met, by a comfortable margin, the requirements of the final EPA regulations and the local municipal sewer code. Another Hussong/Couplan System employing sphagnum peat as the treatment medium can readily be tied into the existing system, in a series flow arrangement, at a later date. Changing conditions can be met without costly, extensive replacement or modification of the present system. The Hussong/Couplan System treats the wastewaters with ferric chloride (FeCl3) and sodium sulfide (Na2S) at a pH in the 5-7 range in such a way as to obtain a specific molar ratio of Cr6+6, FeCl3, and Na2S in the effluent. A massive precipitate is formed which carried down virtually all of the Cr, both hexavalent and trivalent. The system at the Al plant is a 6,000 gpd system and is composed of 3 holding-batch tanks, chemical adders, misers, controls, and sensors. To insure the continuing purity of the discharge, colorimetric checks are made at the precipitation tank. (FT)
Descriptors: Chromium; Aluminum; Metal industry wastes; Effluent treatment; Industrial effluents; Precipitation; Contaminant removal
Identifiers: Hussong/Couplan Treatment System

78-03235

The distribution of heavy metals in anaerobic digestion.

Hayes, T. D.; Theis, T. L
Cornell Univ., Dept. of Agricultural Engineering, Ithaca, NY 14850

WATER POLLUTION CONTROL FEDERATION. JOURNAL 50(1), 61-72.
Coden: JWPFA5 Publ.Yr: Jan. 1978
illus. refs.
Eng., Fr., Ger., Port., Span. abs.
Languages: ENGLISH
Doc Type: JOURNAL PAPER

Bench scale anaerobic digesters using municipal wastewater sludge were dosed with different levels of heavy metals (Cr+3, Cr+6, Cd, Cu+2, Ni, Pb, and Zn) to determine their distribution and note their effects under operating conditions. Dosings were made in both a stepwise and pulse manner. Characteristic responses observed during periods of digester distress included increased volatile acids and total organic carbon, decreased gas production and methane composition, and depressed values of pH. The order of toxicity established in this study was NiK CuKPbKCr+6jCr+4KZn. Toxic limits for Cd were not reached. Metals were rapidly removed from digester supernatant in excess of 95%. The total insoluble portion was divided between inorganic precipitates and the biomass fraction Between 30% and 60% of the metals were associated with the bacterial cells. Toxic effects became apparent at or near the maximum metals taken up by the digester component. (AM)

Descriptors: Anaerobic process; Sludge digestion; Distribution; Chromium; Copper; Cadmium; Nickel; Lead; Zinc; Municipal wastewaters; Pollutant removal; Heavy metals

78-02560

An experience on re-use of waste water discharged from metal plating shop.

Murai, Y.; Yamadera, T.; Koike, Y.
Hitachi Plant Engineering & Construction Co., Water & Waste Water Treatment Div., Tokyo, Japan

International Congress on Desalination Tokyo, Japan Nov. 27-Dec. 3, 1977
Proceedings of the International Congress on Desalination and Water Reuse: Vols. 1 and 2. In DESALINATION 22(1-3), 97-104, Coden: DSLNAH Publ.Yr: Dec. 1977
illus. refs.
No abs.
Languages ENGLISH
Doc Type: CONFERENCE PAPER

Conventional treatment processes for metal plating wastewaters consist of oxidation, reduction, and coagulation-sedimentation for both rinsing water and used bath. Such treatment does not satisfy recent municipal regulations A new process treats rinse water, containing the bulk of cyanide and Cr wastes, with ion exchangers; acid or alkaline wastewater is treated by chelate resin after coagulation-sedimentation. The treated water can be returned to the shop. The mixed bed exchanger consists of a strongly acid and a weakly basic anion exchange resin after an activated carbon filter, followed by a strongly basic anion exchanger. At the near neutral pH value of the wastewater made possible by this system, complex cyanides are not precipitated nor cyanide gas produced; free cyanide which passes the mixed bed exchanger is caught by the strongly basic exchanger. Regeneration water and deteriorated bath are treated with sodium hypochlorite and ferric sulfate. Chromium (III) is treated with other cations with a strongly acid exchange resin; hydrogen chromate and chromate ion are treated with other anions by weakly basic exchange resins. Wastewater containing heavy metals other than cyanide and Cr is treated by coagulation and sedimentation, sand filtration, and chelate resins which adsorb the metals selectively in series. (FT)

Descriptors: Wastewater treatment; Cyanides; Metal finishing industry wastes; Chromium; Heavy metals; Ion exchange; Industrial effluents; Resins

78-02557

RO applications in wastewater reclamation for re-use.

Sato, T.; Imaizumi, M.; Kato, O.; et al.
Kurita Water Industries, Japan

International Congress on Desalination Tokyo, Japan Nov. 27-Dec. 3, 1977
Proceedings of the International Congress on Desalination and Water Reuse: Vols. 1 and 2. In DESALINATION 22(1-3), 65-76, Coden: DSLNAH Publ.Yr: Dec. 1977
illus. refs.
Sum.
Languages: ENGLISH
Doc Type: CONFERENCE PAPER

The operation of a 370-m3/d RO plant using ROGA spiral-wound modules to treat metal plating wastewater for reclamation is described. To facilitate achievement of 92% recovery, sodium hydroxide was substituted for calcium hydroxide in the primary neutralization stage, preventing precipitation of calcium sulfate on the membrane surface. The RO feed is measured by filtration time and color. A nonionic polyelectrolyte with ferric chloride is used for coagulation and clarification, followed by gravity type dual layer filtration at a velocity of 8 m/hr. TDS in the RO permeate are J10% that of the RO feed. The permeate is further demineralized by ion exchange. Brine COD is removed by an activated carbon filter, and heavy metals are adsorbed by ion exchange resins. Backwash wastes from filters and regeneration wastes from the heavy metal removal unit are recycled to the neutralization tank. The membranes are chemically cleaned once or twice a year; over 18 mo, the flux decline has been very slight. In a RO plant for etching process wastewater, coagulation is with polyaluminum chloride, with further pretreatment by gravity type dual-layer filter, polishing sand filter, and 20-l safety filter. Permeate water quality is 78 ppm TDS, compared to 1,200 ppm in the feed water. The product water is used for rinsing purposes. Another RO plant treats laboratory wastewater. Water recovery is 90%. Water reclamation from brine wastes is made by an evaporation process, so that overall water recovery is 97%-98%. Recovered water is used for biological experiments and cooling towers. (FT)

Descriptors: Japan; Reverse osmosis; Industrial effluents; Wastewater treatment; Wastewater treatment plants; Metal finishing industry wastes; Water reuse

78-02522

Comparative evaluation of commercial polyelectrolytes for flocculating alum precipitated domestic wastewater.

Benedek, A.; Bancsi, J. J.
McMaster Univ., Dept. of Chemical Engineering, Hamilton 16, Ont. L8S 4L7, Can.

Eighth international conference on water pollution research Sydney, Australia Oct. 17-22, 1976
Eighth international conference on water pollution research. Edited by S. H. Jenkins In PROGRESS IN WATER TECHNOLOGY 9(1), 32-42, Coden PGWTA2 Publ.Yr. 1977
illus refs
Sum.
Languages: ENGLISH
Doc Type: CONFERENCE PAPER

A Jar Based Batch Settling Test (JBBST) was used to evaluate the performance characteristics of commercial polyelectrolytes for use in the flocculation of domestic wastewater subsequent to coagulation by a metallic coagulant. Performance evaluation by the JBBST technique relies on the measurement of floc settling rate which can be used to predict continuous clarifier effluent concentrations as a function of clarifier overflow rate. Thirty-two different commercial polyelectrolytes were examined initially by JBBST for domestic waste water clarification and P removal in conjunction with alum. A mid-range hydrolysis (10%-20%) anionic polyacrylamide is the most suitable polyelectrolyte for such application. Extensive tests were undertaken with different polyelectrolytes, at several dosages and 2 different wastewater plants. At all probabilities, the mid-range hydrolysis polyacrylamide is superior to the high percent hydrolysis polyelectrolytes usually recommended by manufacturers for this application. (AM)

Descriptors: Domestic wastes; Wastewater treatment; Flocculation; Secondary treatment
Identifiers: polyelectrolytes; comparative evaluation

78-01987

Optimization of waste disposal systems in control of environmental impact of coal-fired utilities.

Breitstein, L.; Ellison, W.; Warner, M.; et al.
NUS Corp., Environmental Safeguards Division, 4 Research Pl., Rockville, MD 20850

COMBUSTION 49(4), 35-40, Coden: ENFIAG Publ.Yr: Oct. 1977
illus. refs.

No abs.

Languages: ENGLISH

Doc Type: JOURNAL PAPER

The principal contaminants in flue gas from pulverized coal-fired boilers are particulates, sulfur dioxide (SO2), nitrogen oxides (NOx), and smaller amounts of carbon monoxide, hydrocarbons, aldehydes, and toxic trace elements. The principal wastewaters from steam electric generating plants are low volume waste, ash sluice, metal cleaning waste, boiler blowdown, once-through condenser cooling water, cooling tower blowdown, and material-storage and construction runoff. The principal solid wastes are bottom ash, dewatered fly ash, and flue gas desulfurization (FGD) sludge, containing dissolved solids, COD, and trace elements. Cooling systems produce both chemical and thermal wastes. FGD systems for SO2 control cost $60-$75/kw for a 500-Mw plant. Particulates are removed by electrostatic precipitators at a capital cost of $5-$20/kw. Emission limits for NOx are now met solely through design engineering. Effluents are brought into compliance with 1977 regulations through neutralization, oil removal, mixing, precipitation, flocculation, sedimentation, pH adjustment, and settling. Systems may or may not be mechanical equipment intensive; costs will be $2-$8/kw generating capacity. The 1983 effluent requirements will necessitate incremental expenditures of $5-$15/kw for bottom ash sluice water and $1-$2/kw for cooling tower blowdown. FGD solid waste stabilization methods include pug mill mixing and landfill compaction of filter cake, dry fly ash, and other dry additives, and feeding silicate additives to FGD slurry discharge flow to pond disposal sites; capital costs are $10-$50/kw. Cooling lakes and ponds, evaporative rectangular mechanical draft towers, and hyperbolic natural draft towers are used for cooling surface waters. Liquid and thermal discharge control systems are highly site dependent. (FT)

Descriptors: Coal; Boilers; Industrial emissions; Industrial effluents; Electric power plants; Thermal discharges; Cooling systems; Federal regulations; Economics; Engineering; Solid wastes; Flue gas desulfurization; Environmental impact; Pollution control

78-01271

Reducing fluoride in industrial wastewater.

Paulson, E G
Industrial Pollution Control, Inc., 45 Riverside Ave., Westpost, CT 06880

CHEMICAL ENGINEERING 84(22), 89-94, Coden CHEEA3 Publ.Yr Oct. 17, 1977
illus. refs.
Sum.

Languages: ENGLISH

Doc Type JOURNAL PAPER

The most commonly used treatment for removal of fluorides involves the addition of a soluble Ca salt, forming insoluble calcium fluoride. Effluents treated in this manner generally have concentrations of fluorides from 12 to 30 mg/l. Any fluoride that is complexed will not readily react with a Ca salt. The Ca salt must be present in enough quantity to completely precipitate the soluble fluoride. The pH must also be controlled to a range predetermined by experimentation, usually between 8 and 9, or K12. Factors affecting the required pH range include the characterists of the waste stream and the specific treatment process. Heavy metals and fluorides may be removed simultaneously. Reaction times vary from 30 min to 24 hrs. Fluorides can be removed either by batch treatment or by a continuous flow-through process. Continuous treatment is preferred for K100,000 gpd. Continuous treatment typically utilizes an equalization tank, a reaction tank, sludge-handling systems, and instrumentation. A process flow chart for sludge handling is provided and each step of the continuous treatment procedure is discussed. Hydrofluoric acid solutions must be neutralized, usually with lime, either prior to or at the same time as the precipitation step. Aluminum sulfate (alum) has been used to lower F- concentration and the efficiency of the alum flocculation affects the extent removal. Alum treatment also increases the amount of sludge and results in thickening and mechanical dewatering. The alum can possibly be recovered from the sludge using the proper technology. Activated alumina can reduce F- levels to J2 mg/l. Significant factors affecting this process are discussed. (FT)

Descriptors: Fluorides; Industrial effluents; Wastewater treatment; Pollutant removal; Aluminum compounds

Identifiers: alum precipitation

78-01270
Heavy metals removal.
Lanouette, K H.
Industrial Pollution Control, Inc., 45 Riverside Ave., Westport, CT 06880
CHEMICAL ENGINEERING 84(22), 73-80, Coden: CHEEA3
Publ.Yr: Oct. 17, 1977
illus. refs.
Sum.
Languages: ENGLISH
Doc Type: JOURNAL PAPER
The most common method for the removal of inorganic heavy metals is chemical precipitation. Typical final concentration levels are given for this method, and specific treatment methods are discussed, including batch and continuous systems. Batch treatment systems can be designed for flows J50,000 gpd and usually consist of 2 tanks. When wastewater characteristics are uniform or when large volumes must be handled, a continuous system is applicable. It is best to remove suspended heavy metals from the chemically treated effluent by filtration. Sludge handling may consist of dewatering by centrifugation, plate and frame filters, or sludge-drying beds. Recovery of metals from sludges involves acid digestion, neutralization, and electrolysis. Chemical precipitation of heavy metals is usually accomplished with lime, caustic, and sodium carbonate. Costs and procedures involved with using these chemicals are considered. Alternate removal methods are activated carbon adsorption, ion exchange, reverse osmosis, and cementation. The aspects of each procedure are discussed. Precipitation removal techniques for Cd include pH adjustment with lime or caustic to a pH of about 11, or with sodium carbonate to a pH of 9.5-10. Hexavalent Cr can be precipitated by adjusting the pH and adding a reducing agent, usually sodium dioxide or r sodium metabisulfite. Trivalent Cr is precititated at a pH of 7.5-8.5 with lime or caustic. Other means for Cr removal include activated carbon, ion exchange, and biological treatment. Precipitation of Pb with lime, caustic, or soda ash is useful. Studies indicate a combination of trisodium phosphate and caustic is the most effective system. Mercury is precipitated by an acid pH adjustment and the addition of sodium sulfide; separation is accomplished by filtration Silver is recovered by electrolysis and cementation. Primary sources and specific treatments for each of the above metals are outlined. (FT)
Descriptors: Heavy metals; Industrial effluents; Pollutant removal; Wastewater treatment; Sludge treatment

78-01269
Controlling sulfur compounds in wastewaters.
Watkins, J. P
Hydroscience, Inc , 363 Old Hook Rd., Westwood, NJ 07675
CHEMICAL ENGINEERING 84(22), 61-65, Coden: CHEEA3
Publ.Yr. Oct. 17, 1977
illus. refs
Sum
Languages ENGLISH
Doc Type: JOURNAL PAPER
The advanced techniques of electrodialysis, ion exchange and RO now seem feasible for control of selected S-containing effluents and may become practical for recovery processes as well. Biological treatment of S-containing wastes may involve either aerobic or anaerobic bacteria. For reduced forms of S, aerobic treatment is feasible, typically producing thiosulfates or sulfates as the end products Anaerobic treatment is applicable to oxidized forms of S to yield sulfides or elemental S. The chemistry of each biological system is outlined. Satisfactory operation of an activated-sludge system with influent S-2 concentrations of 5-10 mg/l was reported. Biological waste treatment studies for a manufacturer of textile chemicals and dyestuffs show that highly variable S-2 levels (ranging from 10 to 65 mg/l in the plant waste discharge) inhibited biological treatment. Aerobic biological treatment is effective only when the influent concentrations are relatively constant and sufficient O2 for oxidation is available. The primary end product of biochemical oxidation of thiosulfate is sulfate (SO4-2). Biological treatment in a pulp and paper mill can remove K95% of the S in wastewater containing K200 mg/l of sulfite. Anaerobic bacteria can remove S from wastes, but the reaction generates disagreeable S-2 odors. Sulfate concentrations J100 mg/l avoid significant S-2 odor in an anaerobic lagoon. Chemical treatment by oxidation or precipitation is effective. Oxidation with O2, H2O, Cl2, and other oxidants is described. Precipitation with heavy metals such as Fe, Zn, Pb, Ag, and Cu is an effective treatment method. Activated carbon adsorption gained wide acceptance in general wastewater treatment and now appears to be a viable method for removing S compounds. Pretreatment wastewater to remove particulates may be necessary. (FT)
Descriptors. Sulfur compounds; Sulfur removal; Wastewater treatment; Reverse osmosis; Industrial effluents; Biological treatment; Chemical treatment; Ion exchange
Identifiers: sulfates; sulfides; sulfites; electro-dialysis

Whirlpool Corporation
York Metal Finishing Co.

The major issues raised by commenters are addressed in this section. A summary of all comments received and of our responses is included in the public record for this regulation.

1. Comment: Many commenters objected to the certification language EPA proposed as an alternative to TTO Monitoring. One commenter pointed out that EPA had recently proposed new certification language for signatories to permit applications and reports (40 CFR 122.6) as part of a settlement agreement in the consolidated permits litigation. (*NRDC* v. *EPA*, and consolidated cases, No. 80-1607, D.C. Cir.) and suggested that EPA adopt that language here.

Response: EPA agrees that changes in the certification language are warranted. First, we believe it is appropriate to modify the proposed language to accord more closely with the certification language agreed to in the consolidated permits settlement agreement concerning 40 CFR § 122.22, formerly § 122.6, 47 FR 25548, 25553 (June 14, 1982). We do not see a significant enough difference between this regulation and § 122.22 to justify substantially different language. Thus, we have adapted the proposed settlement language with minor differences reflecting the particular nature of the TTO certification requirement. This language is substantially similar to that now available for the electrical and electronics industry (Phase I). *See* 48 *FR* 15382, April 8, 1983.

Second, we have amended the language to allow the discharger to certify that "no dumping of concentrated toxic organics into the wastewater has occurred since filing the last discharge monitoring report." The proposed language appeared to require the discharger to certify that he is in compliance with the limit; we recognize that it may be difficult to certify to this language in the absence of monitoring. Now, the discharger will be allowed to certify as to his toxic organic management practices. However, because the new wording is less precise (i.e., no "dumping of concentrated toxic organics") and because some commenters pointed to the need for more specificity about certification procedures, we are adding more explicit language requiring the discharger to describe his toxic organic management plan. The proposed language would have required the discharger to specify the toxic organic compounds used and the procedure used to prevent excessive wastewater discharge of toxic organics, whereas the final language requires the discharger to submit a toxic organic management plan that specifies to the permitting or control authority's satisfaction the toxic organic compounds used; the method of disposal used instead of dumping, such as resale, reclamation, contract hauling, or incineration; and procedures for assuring that toxic organics do not routinely spill or leak into the wastewater. The discharger must also certify that the facility is implementing the toxic organic management plan.

Finally, for direct dischargers, the solvent management plan will be incorporated as a condition of their NPDES permits. A similar requirement does not exist for indirect dischargers because under the Clean Water Act permits are not issued for them by the control authority. However, the pretreatment standard does require indirect dischargers to implement the plan which they submit to the control authority. Both these requirements reinforce the discharger's responsibility to implement his certification statement.

Addition of certification language is intended to reduce monitoring burdens. It does not in any way dimish the discharger's liability for noncompliance with the TTO limitation.

2. Comment: Several commenters questioned EPA's estimate of minimal costs for TTO control stating that signficant costs would be incurred from solvent disposal and from compliance monitoring. A number of commenters questioned the statement that costs for solvent disposal could be offset by reclamation of these wastes.

Response: The Agency recognizes that costs can be associated with proper solvent management and compliance monitoring. However, the Agency does not believe these costs will be significant for the majority of the facilities in the industry. 24% of the captives, 10.3% of the job shops and 100% of the printed circuit board facilities perform solvent degreasing. An estimated 73 percent of the facilities using solvent degreasing are already practicing proper disposal of these wastes and would, therefore, not be expected to incur additional costs to comply with the electroplating or metal finishing TTO limits. Facilities not presently practicing proper solvent management would need to implement practices such as contractor removal and/or reclamation.

Costs of proper solvent disposal can be offset by solvent reclamation. In response to comments, the Agency contacted representatives of national solvent reclamation associations. These representatives indicated that solvent reclamation is a widespread, readily available, and growing practice. In addition to the numerous plants with on-site reclamation facilities, it is estimated that more than 100 independent reclaimers are in operation throughout the country and that reclaimers will pay for spent solvents especially if the solvents are segregated and there is a market demand for the particular solvents.

The Agency recognizes that frequent monitoring for TTO can be expensive. The Agency has attempted to reduce the cost by establishing the certification alternative and by allowing monitoring, when necessary, to be limited to those toxic organics likely to be present in the wastewater of a plant. The Agency believes that almost all facilities will be able to certify in lieu of monitoring. However, in response to comments on the cost of compliance monitoring, the Agency has re-assessed its cost estimate to consider quarterly monitoring for TTO. This frequency is reflective of a common monitoring frequency required by control authorities. For the reasons explained in section IX, above, EPA believes that its economic analyses of the impacts of the TTO limit are conservative and fully state or overstate the likely actual economic impacts.

3. Comment: Some commenters pointed out that the new source limits for cadmium were not supported by historical performance data. However, no commenters submitted data on performance capabilities of new source technology.

Response: New source standards for cadmium are based on control technology which is designed to reduce cadmium in wastewater discharge from cadmium sources, e.g. cadmium plating, chromating of cadmium plated parts, and acid cleaning of cadmium plated parts. The new source standards for cadmium are based on the amounts of cadmium expected as a background level to be found in wastewaters from plants not involved with cadmium plating. The standards were determined from data on concentrations observed in untreated wastewater from metal finishing plants that do not plate cadmium. It represents the amount of cadmium present from incidental sources, when the principal cadmium sources are full controlled. The data consist of 81 observations from 27 plants. The data were divided into statistically homogeneous groups by plant. The average upon which the standards were based was taken from the group with the highest average cadmium concentration. Estimates of

variability used in determining the limits were obtained from the two highest groups. This was somewhat conservative, because precipitation/clarification systems should achieve significant further removals from these raw waste streams.

The Agency also checked the consistency of the limit with data from EPA sampled precipitation/clarification systems. These data indicated that the new source limit could be achieved alternatively by using precipitation/clarification, rather than total control of the principal cadmium source. This review included plants with cadmium raw wastes of from 0.012 to 1.88 mg/l. The Agency also reviewed the data base used to develop the cadmium limit to verify that it included all available data from non-cadmium plating plants. Prior to promulgation costs were also re-examined to include expenses for control of chromating and acid cleaning of cadmium plated parts, in addition to controlling cadmium plating which was assessed in the proposal.

4. Comment: Commenters suggested various averaging times as the basis for monthly limitations, including 4-day, 30-day, and "N" day averages.

Response: The Agency has evaluated the merits of the suggested alternatives and decided that an average of ten samples (obtained within a one-month period) would provide a reasonable basis for monthly limitations, minimizing the number of samples necessary.

Although it is not anticipated that a monitoring frequency of 10 times per month will always be required, the cost of this frequency of monitoring is presented in the economic impact analysis to the metal finishing regulation. That frequency was selected because if facilities sample 10 times per month they can expect a compliance rate of approximately 99 percent, if they are operating at the expected mean and variability. Plant personnel, in agreement with the control authority, may choose to take fewer samples if their treatment system achieves better long term concentrations or lower variability than the basis for the limits, or if plant personnel are willing to accept a statistical possibility of increased violations. The 10 sample monthly limit is consistent with other regulations and recent proposals for other metals industries, e.g., porcelain enameling, coil coating, batteries, copper, and aluminum forming.

The 4-day average is an inadequate measure of treatment system performance over extended periods. This basis was used for the electroplating rules only under the special circumstances of a Settlement Agreement.

The N-day average suggested by two commenters was considered by the Agency but was rejected as unnecessarily complex and likely to create confusion for both dischargers and control authorities.

5. Comment: Commenters disagreed on the desirability or need to rescind the electroplating regulations for captive electroplaters upon the compliance date of the metal finishing PSES.

Response: The Part 413 Electroplating PSES will no longer be applicable to captive electroplating when they must comply with the Metal Finishing PSES for metals and cyanide is reached. Captive electroplaters will then be regulated under the Part 433 Metal Finishing PSES. There is no need to maintain two sets of requirements for the same pollutants at the same plants. If, for some reason, Part 433 should become inapplicable, then Part 413 will apply to them.

6. Comment: The majority of commenters responding to the question of the PSES compliance date stated that March 30, 1984 would not provide sufficient time for compliance.

Response: To allow facilities sufficient time to install or upgrade the necessary treatment systems, the Agency is establishing the compliance date of the metal finishing PSES for metals and cyanide to be 31 months from the date of promulgation. This extension is based on an Agency study which showed that 31 months is required to plan, design, and install the recommended treatment technology.

This extension does not apply to compliance with the toxic organics limit, however. For Metal Finishing PSES, an interim TTO level must be achieved by June 30, 1984, based on no end-of-pipe treatment, and the final TTO limit based on end-of-pipe treatment must be achieved 31 months from the date of promulgation. For Electroplating PSES, the TTO compliance date is 3 years from promulgation of this rulemaking. That allows the job shop and IPCBM sectors the maximum allowable time for compliance under the Clean Water Act (CWA).

7. Comment: Commenters stated that the proposed lead limit was not achievable based on the technology recommended. Some argued that plants with high raw waste lead values were not adequately represented in the data base. One commenter submitted additional data.

Response: The Agency reviewed the lead data base to assure that all usable data from plants having a lead source were included. EPA did consider some additional self-monitoring data that were found to be applicable and excluded data from an originally-considered plant which was not adequately controlling wastewaters. The revised EPA data base was used to derive a final lead limit. The daily maximum for lead has been changed slightly from 0.67 mg/l to 0.69 mg/l. The Agency also examined data submitted during the comment period. These data were not included because of inadequate treatment design and/or operation. For example, TSS values as high as 119 mg/l were submitted, oil and grease was as high as 1395 mg/l and hexavalent chromium was as high as 1.21 mg/l. An examination of the possible effect of including the commenter's data for lead revealed that only a slight change in the limit would have occurred.

8. Comment: Some commenters suggested a small plant exemption from the Metal Finishing regulations, arguing that an exemption should be granted similar to that provided by Part 413 for plants discharging less than 10,000 gallons per day.

Response: Small indirect discharging facilities (<10,000 GPD discharge) were given less stringent requirements in the Electroplating Pretreatment Standards. Many of these facilities are job shops and for the reasons stated above will not be covered by the Part 433 requirements.

The Agency re-examined the effect of the Part 433 metal finishing regulations on small facilities, and, has determined that because job shops and IPCBMs are exempted from the metal finishing PSES, there would be no significant economic impacts if the remainder were covered by the metal finishing standards. For indirect captives discharging less than 10,000 GPD, the investment cost would amount to $38 million with annual costs of $12 million. There are no estimated plant closure or divestitures. A small facility exemption is not warranted for the Metal Finishing regulation.

9. Comment: Some commenters stated that the addition of a TTO limit to the Electroplating PSES is a violation of the NAMF Settlement Agreement.

Response: Under the March 1980 Settlement Agreement the Agency agreed that:

> any further BAT analog standards will be based on treatment technology compatible with the model technology upon which these standards were based . . . . In developing BAT analog standards for the industry, EPA will take into account the cumulative impact of these "BPT" regulations in determining what is "economically achievable." * * * As to this segment of the metal finishing industry

that is economically vulnerable. EPA does not believe that more stringent regulations are now economically achievable. Therefore, EPA does not plan to develop more stringent new pretreament standards for the job shop metal finishing segment in the next several years. Nor does EPA plan to develop in the next several years more stringent standards for the independent printed circuit board segment where significant economic vulnerability also exists.

EPA is not imposing metals and cyanide limitations more stringent than those specified in the Part 413 existing applicable pretreatment standards, despite evidence that such limits can be reliably achieved by the technology that forms the basis of the current standards.

Indirect discharging job shop and independent printed circuit board facilities are expected to incur costs only to comply with the TTO limitation which is being added to the electroplating pretreatment standards in Part 413. This TTO limitation is included in the regulation because it will substantially reduce a significant toxic problem, while compliance will cause negligible economic impacts on these industry sectors. Compliance with the toxic organic standard can be achieved by good management practices (i.e., not dumping waste solvents into the wastewaters). No additional end-of-pipe technology (beyond that required for metals removed) is necessary.

Even under very conservative estimates only 77 of an estimated 2734 indirect discharging job shops and 88 of the 327 indirect independent printed circuit board manufacturers may incur costs to comply with the TTO standard. Total annual costs for all plants of $222,500 and $254,300 respectively are projected for the two sectors. The average annual cost per facility to comply with the TTO limitations is approximately $2900, primarily for sampling and analysis. No closures or employment effects are projected for these sectors. Production cost increases are expected not to exceed 0.03 percent for the two sectors.

The economic impact analysis also performed two sensitivity analyses: the first with a greater number of plants monitoring and, the second, with plants monitoring monthly instead of quarterly. Both changes led to only slightly different impacts. At most only one plant would be affected. All scenarios were found to be acceptable and economically achievable. Thus the TTO limits are not "more stringent standards" in the sense of the Settlement Agreement, which expressly tied "stringency" to "economic vulnerability".

Finally, the TTO limits need not be complied with before 1986. Thus, even if control of TTO were considered significantly more stringent the time allowed for compliance will amount to 6 years from the date of the Settlement Agreement. That fulfills the Agency's 1980 obligation not to develop significantly more stringent standards for those facilities for the next several years.

10. Comment: Some commenters stated that the proposed TTO limit could not be met using a combination of solvent management and common metals treatment. Several commenters also pointed out that plants previously in compliance with the metals limitations under Electroplating PSES may now require installation of common metals treatment to meet the TTO limit.

Response: The Agency has reviewed the TTO data base, reevaluated the mean and variability factor, and revised the effluent limit for TTO. The major factor contributing to the change was the examination of the TTO levels at certain groupings of plants. The most notable discovery was that plants that performed both solvent degreasing and painting tended to have the highest background concentrations of any process grouping. The limit has been based on these plants. Where plants are otherwise subject to a regulation whose technology basis includes precipitation/clarification for removal of metals, the TTO limit has been based on effluent data from precipitation/clarification treatment systems. We have also established a TTO limit of 4.57 mg/l based on only management practices. This limit is being used as an interim requirement prior to installation of pollution/equivalent to precipitation/clarification, and for plants discharging less then 10,000 gpd and now covered by the Part 413 Electroplating PSES. Thus today's regulation specifies an interim TTO limit for small plants (<10,000 gallons per day) because these plants may not already have common metals treatment in place. Furthermore, the Agency notes that most facilities should be capable of achieving compliance with the ultimate TTO standard even without end-of-pipe treatment, simply through strict management control of toxic organics. 89% of the TTO data *prior* to end-of-pipe treatment would comply with the final TTO limit based on the inclusion of precipitation/clarification.

11. Comment: Several commenters recommended an amenable cyanide limit as an alternative to a total cyanide limit because amenable cyanide more accurately reflects the performance of alkaline chlorination treatment.

Response: Most facilities should be able to meet the total cyanide limit. However, sufficient information has been presented on cyanide formulations and formation of complexes to support the possibility that a significant population could fail to meet the limitations. The technology basis is alkaline chlorination which destroys amenable cyanides. Thus, the final rules include an alternative cyanide limit for plants generating significant quantities of complexed cyanide. The data and basic calculations for the alternative cyanide limit were presented in the proposed development document. The Agency rejected specifying a limit only for amenable cyanide. While complexed cyanide are substantially less toxic, a review of literature indicates that significant transformatioin of complexed cyanides into amenable cyanides will occur in the aquatic environment due to the presence of sunlight. If any water quality problems occur due to the use of this alternative, the control authority should examine alternative technologies, i.e., precipitation with ferrous sulfate.

12. Comment: Several commenters suggested that fluoride, iron, and hexavalent chromium be regulated.

Response: The Agency did not establish limitations for fluorides, iron, or hexavalent chromium because it was determined that these parameters were (1) not present in sufficiently high quantities to warrant regulation or (2) would be removed by controlling a regulated parameter.

The historical performance data for flouride in effluent from plants with Option 1 treatment systems shows that the mean concentration was 6.58 mg/l: well below levels required by categorical regulations for other industries, i.e., inorganic chemicals, and electrical and electronic components (phase I).

Iron was not selected for regulation because it would be substantially reduced during proper precipitation/clarification treatment. Thus control of regulated pollutants will also effect control of iron.

A limit was not established for hexavalent chromium because it will be controlled by regulating total chromium. The technology basis does include the cost for hexavalent chromium stream segregation and reduction. As stated in the development document, chemical hexavalent chromium reduction can readily achieve final hexavalent chromium concentrations of 0.16 mg/l for a daily maximum and 0.10 mg/l for a maximum monthly average. Additionally, monitoring for total

chromium has a distinct cost advantage over monitoring for hexavalent and subsequently trivalent chromium. If any of these or other parameters cause problems with achieving local water quality requirements, then the control authority must specify further requirements on a plant-by-plant basis.

13. Comment: Several commenters stated that EPA's method for distributing costs for indirect dischargers between the Part 413 electroplating and the Part 433 metal finishing regulations is misleading and unrealistic. Electroplating compliance costs for captive indirect dischargers have not yet been incurred. When these plants do comply, it will be with both regulations in a one-time investment. Therefore, no costs should be attributed to Electroplating; rather, all costs should be considered as Metal Finishing compliance costs.

Response: The fact that a company may make a one time investment doesn't necessarily mean that all the costs should be attributed to the Part 433 Metal Finishing Standard. The compliance date for Part 433 is now generally two years after compliance is required by Part 413.

When EPA conducts its economic analysis of a guideline, it identifies the incremental costs and impacts, as well as the incremental pollutant removals, of that particular guideline. If other previously promulgated regulations pertain to the same industry, the costs and associated pollutant removals would have been identified in previous economic and environmental analyses. With the metal finishing regulation, the electroplating costs are baseline costs: the will occur even if metal finishing is not promulgated. Costs and impacts of metal finishing are incremental to electroplating; the effect of electroplating isn't negated or obviated because it may be more efficient for plants to make a one time investment.

For non-integrated captive indirect dischargers (more than 10,000 gallons per day), this incremental investment cost is zero. Non-integrated facilities discharge process wastewaters from electroplating operations only. Although these wastewaters are covered by metal finishing standards which are more stringent than electroplating standards, the treatment system installed to meet the electroplating standards will be sufficient to meet the metal finishing limits. This treatment system will be the same whether or not metal finishing is promulgated. The costs associated with installation of this treatment system have already been included in the electroplating analysis and there is no need to include them in the metal finishing regulatory costs.

For integrated captive indirect dischargers, the incremental investment cost is not zero. Integrated facilities discharge wastewaters from other types of processes in addition to electroplating. Although the facility may segregate its electroplating effluent stream for treatment, it is usually more economical to combine waste streams and build a single treatment facility. This treatment facility will be larger than the facility which would have been constructed to treat a segregated electroplating effluent stream alone. The costs assigned to metal finishing are those incremental costs over and above the amount that would have been spent for treatment of the segregated electroplating effluent stream.

Finally, as noted above, EPA did assess the combined impact of today's regulation and the electroplating pretreatment regulations on the captive integrated indirect discharging sector of the industry, assuming both costs would be borne at the same time. The impacts are the same as those due to the electroplating pretreatment standards alone. No additional closures, divestitures, or unemployment effects are expected from the more stringent standards promulgated today.

14. Comment: Several commenters stated that the Agency should do a Regulatory Impact Analysis as required by Executive Order 12291.

Response: Executive Order 12291 does not require a Regulatory Impact Analysis where its consideration would conflict with the development of regulations pursuant to a court order, as with the metal finishing regulation. EPA has prepared, however, an analysis that contains many of the elements of a Regulatory Impact Analysis. This report is included in the public record for this regulation.

15. Comment: Several commenters stated that the Metal Finishing Guidelines are not economically achievable.

Response: EPA's *Economic Analysis of Proposed Effluent Standards and Limitations for the Metal Finishing Industry* provides an in-depth analysis of the economic impacts of the proposed guidelines. This analysis considers the compliance costs (both capital and annual) for two regulatory options. The economic impacts in terms of plant closures, process divestitures, employment losses, and cost increases are also presented for both options. Analysis results are presented for each segment of the industry that is being regulated: direct discharging job shops and captives, indirect discharging job shops and captives, and integrated printed circuit board manufactures.

Results for Option I, the selected option, are summarized on Exhibit I-4 and I-5 of the referenced report. The direct discharging segment (both job shops and captives) will incur costs to comply with the TTO limitation only. Indirect discharging job shops and independent printed circuit boards also will incur costs to comply with the TTO standard only. Annual compliance costs at these facilities are less than $2,900. No closures or employment effects are projected. Indirect discharging captives will incur a total of $116 million in annual compliance costs. The analysis indicates that this segment is composed primarily of large plants, many of which are members of diversified industrial corporations. As a result, there are no projected impacts among captive plants. The costs of production for indirect discharging captives are projected to increase from 0.2 to 1.0 percent.

The absence of closure or employment effects combined with a small increase in the cost of production ranging from 0.2 to 1.0 percent for all plants covered by the metal finishing regulation indicate that the guidelines are economically achievable.

16. Comment: Commenters questioned the assumption that captive operations have no capital availability problem. They say that the economic conditions have changed and capital availability could indeed be a problem.

Response: Changes in the availability of capital are reflected in the cost of capital. To reflect the increase in the cost of capital, EPA adjusted its nominal cost of capital assumption in the Economic Impact Analysis to 13 percent from the 10 percent cost of capital used in the proposed regulation. To the extent that an increase in the cost of capital is a problem today for metal finishers, it would show up in the impact analysis conducted under the higher cost of capital. No changes in closures or divestitures resulted from the increased cost of capital assumption.

17. Comment: Several commenters stated that EPA did not properly consider the impact on small businesses, specifically the costs of compliance and resultant economic impacts for captive indirect dischargers whose electroplating process flow is less than 10,000 gpd. EPA implicitly assumed that all of these plants are in compliance with the Electroplating Pretreatment Standards, but in fact these Standards exempted plants from compliance whose flow were less than 10,000 gpd. Therefore, they will incur costs and

economic impacts to comply with Metal Finishing Guidelines.

Response: The commenters are correct. The agency has since analyzed the impact on indirect discharging captives with metal finishing process flows of less than 10,000 gpd. The analysis concluded that a total of 912 plants will incur compliance costs. The total capital cost of compliance for this universe is estimated at $35 million with annual costs of $12 million. No closures or employment effects are projected for this industry segment.

18. Comment: Commenters questioned the assumption that the metal finishing demand curve is inelastic.

Response: Metal finished products face a wide range of demand elasticities. However, there are no good substitutes for metal finishing due to the quality it imparts on materials. As a result, an increase in the cost of metal finishing will not bring a more than proportional decrease in the use of metal finishing. The analysis assumed that demand for metal finishing is in the inelastic range but did not assume that all cost increases could be passed through. In fact, the captive closure analysis assumes that a plant's captive operations will not be able to pass through a pollution control cost increase if it amounts to more than 5 percent of their total revenue. If the ratio of annual costs to total revenue was larger than 5 percent, the plant was projected to close.

19. Comment: Commenters stated that they thought captive facilities will be at a competitive disadvantage because job shops are exempted from metal finishing standards.

Response: Captives are very rarely in direct competition with job shops, vying for the same customers. Captive platers, by definition, service their own firm's needs. A captive firm will maintain a plating process for its cost advantages, scheduling control, and specialty processes. In the Agency's survey of captive facilities, over 64 percent indicated they performed metal finishing in-house because it was either less expensive to do so or the work flow didn't allow interruption of work. It is true that job shops will often receive a captive's overflow work, but this does not make them price competitors. Also, almost three-fourths of the indirect discharging captive facilities and all direct discharging captives and job shops already have treatment in place. To the extent there may be changes in the competitive position of captives versus job shops, most of these changes would have occurred already. Finally, indirect discharging job shops were exempted from the metal finishing regulation specifically because of their economic vulnerability. Job shops tend to be much smaller than captives: they average 26 employees and $1.3 million in sales versus over 100 employees and $14 million in sales for captives.

20. Comment: A comment was made that the definition of a job shop may force some "job shops" to be classified as captives.

Response: EPA proposed a definition of job shops based on 50% ownership of treated material. This is in accord with existing practice by an overwhelming portion of the affected industry. An examination of the survey of job shops revealed that 95% of the facilities stated that their work was either 100% job ordered or 100% captive. Only 0.28% of the facilities reported that more than 25%, but less than 50%, of their production was done on materials owned by others.

The final definition of a job shop has been modified slightly, making the measurement of "not more than 50% ownership" on a yearly basis. This responds to a commenters' fear of repeated reclassification as a result of business transactions. Now facilities will not be reclassified on a day-to-day basis.

The definition is also appropriate because, the fact that a facility is purchasing materials to be processed indicates some availability of capital. If so the less stringent Part 413 requirements are less appropriate for economic reasons.

The agency considered various job shop definitions from commentors and trade association by-laws, including:

- "As its major operation the application of a surface treatment to the products of others."
- "A shop which has purchased orders from more than 50 percent of the materials in process."
- "Parts to be finished are transported from the customer's plant to the finishers and then back."
- "As its major operation the application of a surface treatment to the products of others."
- "A metal finisher who works to other's specifications, making his services, available to the public at all times."

While some of these, notably the first, are close to the proposed and final definitions, all suggestions included substantial ambiguity. In light of the relaxed standards for job shops it is important that the definition be precise and that captive shops not evade Part 433 merely by taking on nominal outside orders. EPA therefore chose a bright-line test that clearly expressed the overwhelmingly prevailing practice in the industry.

EPA's definition is consistent with our 1978 survey of the industry, which asked for the "percent of electroplating done on materials owned by others (basis area plated)" and further defined a job shop as "a manufacturing operation performing work on materials owned by others."

XX. Availability of Technical Information

The basis for this regulation is detailed in four major documents. Analytical methods are discussed in *Sampling and Analysis Procedures for Screening of Industrial Effluents for Priority Pollutants*. EPA's technical conclusions are detailed in *Development Document for Effluent Guidelines, New Source Performance Standards and Pretreatment Standards for the Metal Finishing Point Source Category*. The Agency's economic analysis is presented in *Economic Impact Analysis of Effluent Limitations and Standards for the Metal Finishing Industry*. A summary of the public comments received on the proposed regulation is presented in a report "Responses to Public Comments, Proposed Metal Finishing Effluent Guidelines and Standards," which is part of the public record for this regulation.

Technical information may be obtained by writing to Richard Kinch, Effluent Guidelines Division (WH-552) EPA, 401 M Street, S.W., Washington, D.C. 20460 or by calling (202) 382-7159.

Additional information concerning the economic impact analysis may be obtained from Ms. Kathleen Ehrensberger, Economics Branch (WH-586), EPA, 401 M Street, S.W., Washington, D.C. 20460 or by calling (202) 382-6397.

Copies of the technical and economic documents will be available from the National Technical Information Service, Springfield, Virginia 22161, (703) 487-4650.

XXI. OMB Review

This regulation was submitted to the Office of Management and Budget for review, as required by Executive Order 12291. No written comments were received.

In accordance with the Paperwork Reduction Act of 1980 (Pub. L. 96-511), the reporting and recordkeeping provisions in 40 CFR 413.03 and 433.12 that are included in this regulation will be submitted for approval to OMB. They are not effective until OMB approval has been obtained and the public is notified

to that effect through a technical amendment to this regulation.

XXII. List of subjects

40 CFR Part 413

Electroplating, Metals, Water pollution control, Waste treatment and disposal.

40 CFR Part 433

Electroplating, Metals, Water pollution control, Waste treatment and disposal.

Dated: July 5, 1983.

William D. Ruckelshaus,

Administrator.

Authority: Secs. 301, 304, 306, 307, 308, and 501 of the Clean Water Act (the Federal Water Pollution Control Act Amendments of 1972, 33 U.S.C. 1251 *et. seq.*, as amended by the Clean Water Act of 1977; Pub. L. 95-217).

[Note.—These appendices will not appear in the CFR.]

XXIII. Appendices

Appendix A—Abbreviations, Acronyms, and Other Terms Used in This Notice

Act—The Clean Water Act.

Agency—The U.S. Environmental Protection Agency.

BAT—The best available technology economically achievable under Section 304(b)(2)(B) of the Act.

BCT—The best conventional pollutant control technology, under Section 304(b)(4) of the Act.

BMPS—Best management practices under Section 304(e) of the Act.

BPT—The best practicable control technology currently available under Section 304(b)(1) of the Act.

Captive—A facility which owns more than 50% (annual area basis) of the materials undergoing metal finishing.

Clean Water Act (also "the Act")—The Federal Water Pollution Control Act Amendments of 1972 (33 U.S.C. 1251 *et seq.*), as amended by the Clean Water Act of 1977 (Pub. L. 95-217).

Development Document—*Development Document for Effluent Limitations, Guidelines, and Standards for the Metal Finishing Point Source Category*, EPA 440-1-80-091-A, June 1980.

Direct discharger—A facility that discharges or may discharge pollutants into waters of the United States.

Indirect discharger—A facility that discharges or may discharge pollutants into a publicly owned treatment works.

Job Shop—A facility which owns not more than 50% (annual area basis) of the materials undergoing metal finishing.

Integrated facility—One that performs electroplating operations (including electroplating, electroless plating, chemical etching and milling, anodizing, coating, and printed circuit board manufacturing) as only one of several operations necessary for manufacture of a product at a single physical location, and has significant quantities of process wastewater from non-electroplating operations. In addition, to qualify as "integrated," a facility must combine one or more plant electroplating process wastewater lines before or at the point of treatment (or proposed treatment) with one or more plant sewers carrying process wastewater from non-electroplating manufacturing operations.

NPDES Permit—A National Pollutant Discharge Elimination System permit issued under Section 402 of the Act.

NSPS—New source performance standards promulgated under Section 306 of the Act.

POTW—Publicly owned treatment works.

PSES—Pretreatment standards for existing sources of indirect discharges promulgated under Section 307(b) of the Act.

PSNS—Pretreatment standards for new sources of direct discharges, promulgated under Section 307 (b) and (c) of the Act.

RCRA—Resource Conservation and Recovery Act (Pub. L. 94-580) of 1976, Amendments to Solid Waste Disposal Act, as amended.

TTO—Total Toxic Organics is the summation of all values greater than .01 milligrams per liter for each of the specified toxic organics.

Appendix B—Pollutants Excluded From Regulation

(1) Toxic Pollutants—found in only a small number of sources and effectively controlled by the technologies on which the limits are based:

Antimony
Arsenic
Asbestos
Beryllium
Mercury
Selenium
Thallium

(2) Conventional Pollutants:

BOB
Fecal Coliform

Appendix C—Unit Operations in the Metal Finishing Industry

1. @Electroplating
2. Electroless Plating
3. Anodizing
4. Coating (Chromating, Phosphating, and Coloring)
5. Chemical Etching and Milling
6. Printed Circuit Board Manufacturing
7. Cleaning
8. Machining
9. Grinding
10. Polishing
11. Tumbling
12. Burnishing
13. Impact Deformation
14. Pressure Deformation
15. Shearing
16. Heat Treating
17. Thermal Cutting
18. Welding
19. Brazing
20. Soldering
21. Flame Spraying
22. Sand Blasting
23. Other Abrasive Jet Machining
24. Electric Discharge Machining
25. Electrochemical Machining
26. Electron Beam Machining
27. Laser Beam Machining
28. Plasma Arc Machining
29. Ultrasonic Machining
30. Sintering
31. Laminating
32. Hot Dip Coating
33. Sputtering
34. Vapor Plating
35. Thermal Infusion
36. Salt Bath Descaling
37. Solvent Degreasing
38. Paint Stripping
39. Painting
40. Electrostatic Painting
41. Electropainting
42. Vacuum Metalizing
43. Assembly
44. Calibration
45. Testing
46. Mechanical Plating

PART 413—ELECTROPLATING POINT SOURCE CATEGORY

For the reasons stated above, EPA is amending Part 413 of 40 CFR, Chapter I as follows:

1. Section 413.01 is amended by revising paragraph (a) to read as follows:

§ 413.01 Applicability and compliance dates.

(a) This part shall apply to electroplating operations in which metal is electroplated on any basis material and to related metal finishing operations as set forth in the various subparts, whether such operations are conducted in conjunction with electroplating, independently, or as part of some other operation. The compliance deadline for metals and cyanide at integrated facilities shall be June 30, 1984. The compliance date for metals and cyanide at non-integrated facilities shall be April 27, 1984. Compliance with TTO for all facilities shall be July 15, 1986.[1] These

[1] The Consent Decree in *NRDC* v. *Train*, 12 ERC 1833 (D.D.C. 1979) specifies a compliance date for PSES of no later than June 30, 1984. EPA has moved for a modification of that provision of the Decree. Should the Court deny that motion, EPA will be required to modify this compliance date accordingly.

Part 413 standards shall not apply to a facility which must comply with all the pollutant limitations listed in § 433.15 (metal finishing PSES).

* * * * *

2. Section 413.02 is amended by adding a new paragraph (i), as follows:

§ 413.02 General definitions.

* * * * *

(i) the term "TTO" shall mean total toxic organics, which is the summation of all quantifiable values greater than 0.01 milligrams per liter for the following toxic organics:

Acenaphthene
Acrolein
Acrylonitrile
Benzene
Benzidine
Carbon tetrachloride (tetrachloromethane)
Chlorobenzene
1,2,4-trichlorobenzene
Hexachlorobenzene
1,2-dichloroethane
1,1,1-trichloroethane
Hexachloroethane
1,1-dichloroethane
1,1,2-trichloroethane
1,1,2,2-tetrachloroethane
Chloroethane
Bis (2-chloroethyl) ether
2-chloroethyl vinyl ether (mixed)
2-chloronaphthalene
2,4,6-trichlorophenol
Parachlorometa cresol
Chloroform (trichloromethane)
2-chlorophenol
1,2-dichlorobenzene
1,3-dichlorobenzene
1,4-dichlorobenzene
3,3-dichlorobenzidine
1,1-dichloroethylene
1,2-trans-dichloroethylene
2,4-dichlorophenol
1,2-dichloropropane
(1,3-dichloropropene)
2,4-dimethylphenol
2,4-dinitrotoluene
2,6-dinitrotoluene
1,2-diphenylhydrazine
Ethylbenzene
Fluoranthene
4-chlorophenyl phenyl ether
4-bromophenyl phenyl ether
Bis (2-chloroisopropyl) ether
Bis (2-chloroethoxy) methane
Methylene chloride (dichloromethane)
Methyl chloride (chloromethane)
Methyl bromide (bromomethane)
Bromoform (tribromomethane)
Dichlorobromomethane
Chlorodibromomethane
Hexachlorobutadiene
Hexachlorocyclopentadiene
Isophorone
Naphthalene
Nitrobenzene
2-nitrophenol
4-nitrophenol
2,4-dinitrophenol
4,6-dinitro-o-cresol
N-nitrosodimethylamine
N-nitrosodiphenylamine
N-nitrosodi-n-propylamine
Pentachlorophenol
Phenol
Bis (2-ethylhexyl) phthalate
Butyl benzyl phthalate
Di-n-butyl phthalate
Di-n-octyl phthalate
Diethyl phthalate
Dimethyl phthalate
1,2-benzanthracene (benzo(a)anthracene)
Benzo(a)pyrene (3,4-benzopyrene)
3,4-Benzofluoranthene (benzo(b)fluoranthene)
11,12-benzofluoranthene (benzo(k)fluoranthene)
Chrysene
Acenaphthylene
Anthracene
1,12-benzoperylene (benzo(ghi)perylene)
Fluorene
Phenanthrene
1,2,5,6-dibenzanthracene (dibenzo(a,h)anthracene)
Indeno (1,2,3-cd) pyrene (2,3-o-phenylene pyrene)
Pyrene
Tetrachloroethylene
Toluene
Trichloroethylene
Vinyl chloride (chloroethylene)
Aldrin
Dieldrin
Chlordane (technical mixture and metabolites)
4,4-DDT
4,4-DDE (p,p-DDX)
4,4-DDD (p,p-TDE)
Alpha-endosulfan
Beta-endosulfan
Endosulfan sulfate
Endrin
Endrin aldehyde
Heptachlor
Heptachlor epoxide
(BHC-hexachlorocyclohexane)
Alpha-BHC
Beta-BHC
Gamma-BHC
Delta-BHC
(PCB-polychlorinated biphenyls)
PCB-1242 (Arochlor 1242)
PCB-1254 (Arochlor 1254)
PCB-1221 (Arochlor 1221)
PCB-1232 (Arochlor 1232)
PCB-1248 (Arochlor 1248)
PCB-1260 (Arochlor 1260)
PCB-1016 (Arochlor 1016)
Toxaphene
2,3,7,8-tetrachlorodibenzo-p-dioxin (TCDD)

3. Section 413.03 is amended by adding the following:

§ 413.03 Monitoring requirements.

(a) In lieu of monitoring for TTO, the control authority may allow industrial users of POTWs to make the following certification as a comment to the periodic reports required by § 403.12(e): "Based on my inquiry of the person or persons directly responsible for managing compliance with the pretreatment standard for total toxic organics (TTO), I certify that, to the best of my knowledge and belief, no dumping of concentrated toxic organics into the wastewaters has occurred since filing the last discharge monitoring report. I further certify that this facility is implementing the solvent management plan submitted to the control authority."

(b) In requesting that no monitoring be required industrial users of POTWs shall submit a solvent management plan that specifies to the control authority's satisfaction the toxic organic compounds used; the method of disposal used instead of dumping, such as reclamation, contract hauling, or incineration; and procedures for assuring that toxic organics do not routinely spill or leak into the wastewater.

(c) If monitoring is necessary to measure compliance with the TTO standard the industrial user need analyze only for those pollutants which would reasonably be expected to be present.

4. Section 413.14 is amended by adding paragraphs (f), (g), and (h), as follows:

§ 413.14 Pretreatment standards for existing sources.

* * * * *

(f) In addition to paragraphs (a) and (b) the following limitation shall apply for plants discharging less than 38,000 l (10,000 gal) per calendar day of electroplating process wastewater:

Pollutant or pollutant property	Maximum for any 1 day
TTO	4.57

(g) In addition to paragraphs (a), (c), (d), and (e) the following limitation shall apply for plants discharging 38,000 l (10,000 gal) or more per calendar day of electroplating process wastewater:

Pollutant or pollutant property	Maximum for any 1 day
TTO	2.13

(h) In addition to paragraphs (a), (b), (c), (d), (e), (f), and (g) the following shall apply: An existing source

submitting a certification in lieu of monitoring pursuant to § 413.03 of this regulation must implement the toxic organic management plan approved by the control authority.

5. Secton 413.24 is amended by adding paragraph (f), (g) and (h), as follows:

§ 413.24 Pretreatment standards for existing sources.

* * * * *

(f) In addition to paragraphs (a) and (b) the following limitation shall apply for plants discharging less than 38.000 1 (10.000 gal) per calendar day of electroplating process wastewater:

Pollutant or pollutant property	Maximum for any 1 day
TTO	4.57

(g) In addition to paragraphs (a), (c), (d), and (e) the following limitation shall apply for plants discharging 38.000 1 (10.000 gal) or more per calendar day of electroplating process wastewater:

Pollutant or pollutant property	Maximum for any 1 day
TTO	2.13

(h) In addition to paragraphs (a), (b), (c), (d), (e), (f), and (g) the following shall apply: An existing source submitting a certification in lieu of monitoring pursuant to § 413.03 of this regulation must implement the toxic organic management plan approved by the control authority.

6. Section 413.44 is amended by adding paragraph (f), (g), and (h), as follows:

§ 413.44 Pretreatment standards for existing sources.

* * * * *

(f) In addition to paragraphs (a) and (b) the following limitation shall apply for plants discharging less than 38.000 1 (10.000 gal) per calendar day of electroplating process wastewater:

Pollutant or pollutant property	Maximum for any 1 day
TTO	4.57

(g) In addition to paragraphs (a), (c), (d), and (e) the following limitation shall apply for plants discharging 38.000 1 (10.000 gal) or more per calendar day of electroplating process wastewater:

Pollutant or pollutant property	Maximum for any 1 day
TTO	2.13

(h) In addition to paragraphs (a), (b), (c), (d), (e), (f), and (g) the following shall apply: An existing source submitting a certification in lieu of monitoring pursuant to § 413.03 of this regulation must implement the toxic organic management plan approved by the control authority.

7. Section 413.54 is amended by adding paragraph (f), (g), and (h), as follows:

§ 413.54 Pretreatment standards for existing sources.

* * * * *

(f) In addition to paragraphs (a) and (b) the following limitation shall apply for plants discharging less than 38.000 1 (10.000 gal) per calendar day of electroplating process wastewater:

Pollutant or pollutant property	Maximum for any 1 day
TTO	4.57

(g) In addition to paragraphs (a), (c), (d), and (e) the following limitation shall apply for plants discharging 38.000 1 (10.000 gal) or more per calendar day of electroplating process waterwater:

Pollutant or pollutant property	Maximum for any 1 day
TTO	2.13

(h) In addition to paragraphs (a), (b), (c), (d), (e), (f), and (g) the following shall apply: An existing source submitting a certification in lieu of monitoring pursuant to § 413.03 of this regulation must implement the toxic organic management plan approved by the control authority.

8. Section 413.64 is amended by adding paragraphs (f), (g), and (h), as follows:

§ 413.64 Pretreatment standards for existing sources.

* * * * *

(f) In addition to paragraphs (a) and (b) the following limitation shall apply for plants discharging less than 38.000 1 (10.000 gal) per calendar day of electroplating process wastewater:

Pollutant or pollutant property	Maximum for any 1 day
TTO	4.57

(g) In addition to paragraphs (a), (c), (d), and (e) the following limitation shall apply for plants discharging 38.000 1 (10.000 gal) or more per calendar day of electroplating process wastewater:

Pollutant or pollutant property	Maximum for any 1 day
TTO	2.13

(h) In addition to paragraphs (a), (b), (c), (d), (e), (f), and (g) the following shall apply: An existing source submitting a certification in lieu of monitoring pursuant to § 413.03 of this regulation must implement the toxic organic management plan approved by the control authority.

9. Section 413.74 is amended by adding paragraphs (f), (g) and (h), as follows:

§ 413.74 Pretreatment standards for existing sources.

* * * * *

(f) In addition to paragraphs (a) and (b) the following limitation shall apply for plants discharging less than 38.000 1 (10.000 gal) per calendar day of electroplating process wastewater:

Pollutant or pollutant property	Maximum for any 1 day
TTO	4.57

(g) In addition to paragraphs (a), (c), (d), and (e) the following limitation shall apply for plants discharging 38.000 1 (10.000 gal) or more per calendar day of electroplating process wastewater:

Pollutant or pollutant property	Maximum for any 1 day
TTO	2.13

(h) In addition to paragraphs (a), (b), (c), (d), (e), (f), and (g) the following shall apply: An existing source

submitting a certification in lieu of monitoring pursuant to § 413.03 of this regulation must implement the toxic organic management plan approved by the control authority.

10. Section 413.84 is amended by adding paragraphs (f), (g) and (h), as follows:

§ 413.84 Pretreatment standards for existing sources.

* * * * *

(f) In addition to paragraphs (a) and (b) the following limitation shall apply for plants discharging less than 38.000 1 (10.000 gal) per calendar day of electroplating process wastewater:

Pollutant or pollutant property	Maximum for any 1 day
TTO	4.57

(g) In addition to paragraphs (a), (c), (d), and (e) the following limitation shall apply for plants discharging 38.000 1 (10.000 gal) or more per calendar day of electroplating process wastewater:

Pollutant or pollutant property	Maximum for any 1 day
TTO	2.13

(h) In addition to paragraphs (a), (b), (c), (d), (e), (f), and (g) the following shall apply: An existing source submitting a certification in lieu of monitoring pursuant to § 413.03 of this regulation must implement the toxic organic management plan approved by the control authority.

In addition, for the reasons stated above, EPA is establishing a new Part 433 to Title 40 of the Code of Federal Regulations to read as follows:

PART 433—METAL FINISHING POINT SOURCE CATEGORY

Subpart A—Metal Finishing Subcategory

Sec.

433.10 Applicability: description of the metal finishing point source category.
433.11 Specialized definitions.
433.12 Monitoring requirements.
433.13 Effluent limitations representing the degree of effluent reduction attainable by applying the best practicable control technology currently available (BPT).
433.14 Effluent limitations representing the degree of effluent reduction attainable by applying the best available technology economically achievable (BAT).
433.15 Pretreatment standards for existing sources (PSES).
433.16 New source performance standards (NSPS).
433.17 Pretreatment standards for new sources (PSNS).
433.18 (Reserved)

Authority: Sec. 301, 304(b), (c), (e), and (g), 306(b) and (c), 307(b) and (c), 308 and 501 of the Clean Water Act (the Federal Water Pollution Control Act Amendments of 1971, as amended by the Clean Water Act of 1977) (the "Act"); 33 U.S.C. 1311, 1314(b) (c), (e), and (g), 1316(b) and (c), 1317(b) and (c), 1318 and 1361; 86 Stat. 816, Pub. L. 92-500; 91 Stat. 1567, Pub. L. 95-217.

Subpart A—Metal Finishing Subcategory

§ 433.10 Applicability; description of the metal finishing point source category.

(a) Except as noted in paragraphs (b) and (c), of this section, the provisions of this subpart apply to plants which perform any of the following six metal finishing operations on any basis material: Electroplating, Electroless Plating, Anodizing, Coating (chromating, phosphating, and coloring), Chemical Etching and Milling, and Printed Circuit Board Manufacture. If any of those six operations are present, then this part applies to discharges from those operations and also to discharges from any of the following 40 process operations: Cleaning, Machining, Grinding, Polishing, Tumbling, Burnishing, Impact Deformation, Pressure Deformation, Shearing, Heat Treating, Thermal Cutting, Welding, Brazing, Soldering, Flame Spraying, Sand Blasting, Other Abrasive Jet Machining, Electric Discharge Machining, Electrochemical Machining, Electron Beam Machining, Laser Beam Machining, Plasma Arc Machining, Ultrasonic Machining, Sintering, Laminating, Hot Dip Coating, Sputtering, Vapor Plating, Thermal Infusion, Salt Bath Descaling, Solvent Degreasing, Paint Stripping, Painting, Electrostatic Painting, Electropainting, Vacuum Metalizing, Assembly, Calibration, Testing, and Mechanical Plating.

(b) In some cases effluent limitations and standards for the following industrial categories may be effective and applicable to wastewater discharges from the metal finishing operations listed above. In such cases these Part 433 limits shall not apply and the following regulations shall apply:

Nonferrous metal smelting and refining (40 CFR Part 421)
Coil coating (40 CFR Part 465)
Porcelain enameling (40 CFR Part 466)
Battery manufacturing (40 CFR Part 461)
Iron and steel (40 CFR Part 420)
Metal casting foundries (40 CFR Part 464)
Aluminum forming (40 CFR Part 467)
Copper forming (40 CFR Part 468)
Plastic molding and forming (40 CFR Part 463)

(c) This Part does not apply to: (1) Metallic platemaking and gravure cylinder preparation conducted within printing and publishing facilities; and (2) existing indirect discharging job shops and independent printed circuit board manufacturers which are covered by 40 CFR Part 413.)

§ 433.11 Specialized definitions.

The definitions set forth in 40 CFR and the chemical analysis methods set forth in 40 CFR 136 are both incorporated here by reference. In addition, the following definitions apply to this part:

(a) The term "T", as in "Cyanide, T", shall mean total.

(b) The term "A", as in "Cyanide A", shall mean amenable to alkaline Chlorination.

(c) The term "job shop" shall mean a facility which owns not more than 50% (annual area basis) of the materials undergoing metal finishing.

(d) The term "independent" printed circuit board manufacturer shall mean a facility which manufacturers printed circuit boards principally for sale to other companies.

(e) The term "TTO" shall mean total toxic organics, which is the summation of all quantifiable values greater than .01 milligrams per liter for the following toxic organics:

Acenaphthene
Acrolein
Acrylonitrile
Benzene
Benzidine
Carbon tetrachloride (tetrachloromethane)
Chlorobenzene
1,2,4-trichlorobenzene
Hexachlorobenzene
1,2,-dichloroethane
1,1,1-trichloroethane
Hexachloroethane
1,1-dichloroethane
1,1,2-trichloroethane
1,1,2,2-tetrachloroethane
Chloroethane
Bis (2-chloroethyl) ether
2-chloroethyl vinyl ether (mixed)
2-chloronaphthalene
2,4,6-trichlorophenol
Parachlorometa cresol
Chloroform (trichloromethane)
2-chlorophenol
1,2-dichlorobenzene
1,3-dichlorobenzene
1,4-dichlorobenzene
N-nitrosodi-n-propylamine
Pentachlorophenol
Phenol
Bis (2-ethylhexyl) phthalate
Butyl benzyl phthalate
Di-n-butyl phthalate
Di-n-octyl phthalate
Diethyl phthalate
Dimethyl phthalate
1,2-benzanthracene
(benzo(a)anthracene)

Benzo(a)pyrene (3,4-benzopyrene)
3,4-Benzofluoranthene (benzo(b)fluoranthene)
11,12-benzofluoranthene (benzo(k)fluoranthene)
Chrysene
Acenaphthylene
Anthracene
1,12-benzoperylene (benzo(ghi)perylene)
Fluorene
Phenanthrene
1,2,5,6-dibenzanthracene (dibenzo(a,h)anthracene
Indeno(1,2,3-cd) pyrene (2,3-o-phenlene pyrene)
Pyrene
Tetrachloroethylene
Toluene
Trichloroethylene
Vinyl chloride (chloroethylene)
3,3-dichlorobenzidine
1,1-dichloroethylene
1,2-trans-dichloroethylene
2,4-dichlorophenol
1,2-dichloropropane (1,3-dichloropropene)
2,4-dimethylphenol
2,4-dinitrotoluene
2,6-dinitrotoluene
1,2-diphenylhydrazine
Ethylbenzene
Fluoranthene
4-chlorophenyl phenyl ether
4-bromophenyl phenyl ether
Bis (2-chloroisopropyl) ether
Bis (2-chloroethoxy) methane
Methylene chloride (dichloromethane)
Methyl chloride (chloromethane)
Methyl bromide (bromomethane)
Bromoform (tribromomethane)
Dichlorobromomethane
Chlorodibromomethane
Hexachlorobutadiene
Hexachlorocyclopentadiene
Isophorone
Naphthalene
Nitrobenzene
2-nitrophenol
4-nitrophenol
2,4-dinitrophenol
4,6-dinitro-o-cresol
N-nitrosodimethylamine
N-nitrosodimethylamine
Aldrin
Dieldrin
Chlordane (technical mixture and metabolites)
4,4-DDT
4,4-DDE (p,p-DDX)
4,4-DDD (p,p-TDE)
Alpha-endosulfan
Beta-endosulfan
Endosulfan sulfate
Endrin
Endrin aldehyde
Heptachlor
Heptachlor epoxide (BHC-hexachlorocyclohexane)
Alpha-BHC
Beta-BHC
Gamma-BHC
Delta-BHC
(PCB-polychlorinated biphenyls)
PCB-1242 (Arochlor 1242)
PCB-1254 (Arochlor 1254)
PCB-1221 (Arochlor 1221)
PCB-1232 (Arochlor 1232)
PCB-1248 (Arochlor 1248)
PCB-1260 (Arochlor 1260)
PCB-1016 (Arochlor 1016)
Toxaphene
2,3,7,8-tetrachlorodibenzo-p-dioxin (TCDD)

§ 433.12 Monitoring requirements.

(a) In lieu of requiring monitoring for TTO, the permitting authority (or, in the case of indirect dischargers, the control authority) may allow dischargers to make the following certification statement: "Based on my inquiry of the person or persons directly responsible for managing compliance with the permit limitation [or pretreatment standard] for total toxic organics (TTO), I certify that, to the best of my knowledge and belief, no dumping of concentrated toxic organics into the wastewaters has occurred since filing of the last discharge monitoring report. I further certify that this facility is implementing the solvent management plan submitted to the permitting [or control] authority." For direct dischargers, this statement is to be included as a "comment" on the Discharge Monitoring Report required by 40 CFR 122.44(i), formerly 40 CFR 122.62(i). For indirect dischargers, the statement is to be included as a comment to the periodic reports required by 40 CFR 403.12(e). If monitoring is necessary to measure compliance with the TTO standard, the industrial discharger need analyse for only those pollutants which would reasonably be expected to be present.

(b) In requesting the certification alternative, a discharger shall submit a solvent management plan that specifies to the satisfaction of the permitting authority (or, in the case of indirect dischargers, the control authority) the toxic organic compounds used; the method of disposal used instead of dumping, such as reclamation, contract hauling, or incineration; and procedures for ensuring that toxic organics do not routinely spill or leak into the wastewater. For direct dischargers, the permitting authority shall incorporate the plan as a provision of the permit.

(c) Self-monitoring for cyanide must be conducted after cyanide treatment and befor dilution with other streams. Alternatively, samples may be taken of the final effluent, if the plant limitations are adjusted based on the dilution ratio of the cyanide waste stream flow to the effluent flow.

§ 433.13 Effluent limitations representing the degree of effluent reduction attainable by applying the best practicable control technology currently available (BPT).

(a) Except as provided in 40 CFR 125.30–32, any existing point source subject to this subpart must achieve the following effluent limitations representing the degree of effluent reduction attainable by applying the best practicable control technology currently available (BPT):

BPT EFFLUENT LIMITATIONS

Pollutant or pollutant property	Maximum for any 1 day	Monthly average shall not exceed
	Milligrams per liter (mg/l)	
Cadmium (T)	0.69	0.26
Chromium (T)	2.77	1.71
Copper (T)	3.38	2.07
Lead (T)	0.69	0.43
Nickel (T)	3.98	2.38
Silver (T)	0.43	0.24
Zinc (T)	2.61	1.48
Cyanide (T)	1.20	0.65
TTO	2.13	.....
Oil & Grease	52	26
TSS	80	31
pH	(1)	(1)

1 Within 6.0 to 9.0.

(b) Alternatively, for industrial facilities with cyanide treatment, and upon agreement between a source subject to those limits and the pollution control authority, the following amenable cyanide limit may apply in place of the total cyanide limit specified in paragraph (a) of this section:

Pollutant or pollutant property	Maximum for any 1 day	Monthly average shall not exceed
	Milligrams per liter (mg/l)	
Cyanide (A)	0.86	0.32

(c) No user subject to the provisions of this subpart shall augment the use of process wastewater or otherwise dilute the wastewater as a partial or total substitute for adequate treatment to achieve compliance with this limitation.

§ 433.14 Effluent limitations representing the degree of effluent reduction attainable by applying the best available technology economically achievable (BAT).

(a) Except as provided in 40 CFR 125.30–32, any existing point source subject to this subpart must achieve the following effluent limitations representing the degree of effluent reduction attainable by applying the best available technology economically achievable (BAT):

BAT EFFLUENT LIMITATIONS

Pollutant or pollutant property	Maximum for any 1 day	Monthly average shall not exceed
	Milligrams per liter (mg/l)	
Cadmium (T)	0.69	0.26
Chromium (T)	2.77	1.71
Copper (T)	3.38	2.07
Lead (T)	0.69	0.43

BAT EFFLUENT LIMITATIONS—Continued

Pollutant or pollutant property	Maximum for any 1 day	Monthly average shall not exceed
Nickel (T)	3.98	2.38
Silver (T)	0.43	0.24
Zinc (T)	2.61	1.48
Cyanide (T)	1.20	0.65
TTO	2.13	

(b) Alternatively, for industrial facilities with cyanide treatment, and upon agreement between a source subject to those limits and the pollution control authority, the following amenable cyanide limit may apply in place of the total cyanide limit specified in paragraph (a) of this section:

Pollutant or pollutant property	Maximum for any 1 day	Monthly average shall not exceed
	Milligrams per liter (mg/l)	
Cyanide (A)	0.86	0.32

(c) No user subject to the provisions of this subpart shall augment the use of process wastewater or otherwise dilute the wastewater as a partial or total substitute for adequate treatment to achieve compliance with this limitation.

§ 433.15 Pretreatment standards for existing sources (PSES).

(a) Except as provided in 40 CFR 403.7 and 403.13, any existing source subject to this subpart that introduces pollutants into a publiciy owned treatment works must comply with 40 CFR Part 403 and achieve the following pretreatment standards for existing sources (PSES):

PSES FOR ALL PLANTS EXCEPT JOB SHOPS AND INDEPENDENT PRINTED CIRCUIT BOARD MANUFACTURERS

Pollutant or pollutant property	Maximum for any 1 day	Monthly average shall not exceed
	Milligrams per liter (mg/l)	
Cadmium (T)	0.69	0.26
Chromium (T)	2.77	1.71
Copper (T)	3.38	2.07
Lead (T)	0.69	0.43
Nickel (T)	3.98	2.38
Silver (T)	0.43	0.24
Zinc (T)	2.61	1.48
Cyanide (T)	1.20	0.65
TTO	2.13	

(b) Alternatively, for industrial facilities with cyanide treatment, upon agreement between a source subject to those limits and the pollution control authority. The following amenable cyanide limit may apply in place of the total cyanide limit specified in paragraph (a) of this section:

Pollutant or pollutant property	Maximum for any 1 day	Monthly average shall not exceed
	Milligrams per liter (mg/l)	
Cyanide (A)	0.86	0.32

(c) No user introducing wastewater pollutants into a publiciy owned treatment works under the provisions of this subpart shall augment the use of process wastewater as a partial or total substitute for adequate treatment to achieve compliance with this standard.

(d) An existing source submitting a certification in lieu of monitoring pursuant to § 433.12 (a) and (b) of this regulation must implement the solvent management plan approved by the control authority.

(e) An existing source subject to this subpart shall comply with a daily maximum pretreatment standard for TTO of 4.57 mg/l.

(f) Compliance with the provisions of paragraph (c), (d), and (e) of this section shall be achieved as soon as possible, but not later than June 30, 1984, however metal finishing facilities which are also covered by Part 420 (iron and steel) need not comply before July 10, 1985.[1] Compliance with the provisions of paragraphs (a), (b), (c) and (d) of this section shall be achieved as soon as possible, but not later than Feburary 15, 1986.[1]

§ 433.16 New source performance standards (NSPS).

(a) Any new source subject to this subpart must achieve the following performance standards:

NSPS

Pollutant or pollutant property	Maximum for any 1 day	Monthly average shall not exceed
	Milligrams per liter (mg/l)	
Cadmium (T)	0.11	0.07
Chromium (T)	2.77	1.71
Copper (T)	3.38	2.07
Lead (T)	0.69	0.43
Nickel (T)	3.98	2.38
Silver (T)	0.43	0.24
Zinc (T)	2.61	1.48
Cyanide (T)	1.20	0.65
TTO	2.13	
Oil and Grease	52	26
TSS	60	31
pH	(1)	(1)

[1] Within 6.0 to 9.0.

[1] The Consent Decree in *NRDC v. Train*, 12 ERC 1833 (D.D.C. 1979) specifies a compliance date for PSES of no later than June 30, 1984. EPA has moved for a modification of that provision of the Decree. Should the Court deny that motion, EPA will be required to modify this compliance date accordingly

(b) Alternatively, for industrial facilities with cyanide treatment, and upon agreement between a source subject to those limits and the pollution control authority, the following amenable cyanide limit may apply in place of the total cyanide limit specified in paragraph (a) of this section:

Pollutant or pollutant property	Maximum for any 1 day	Monthly average shall not exceed
	Milligrams per liter (mg/l)	
Cyanide (A)	0.86	0.32

(c) No user subject to the provisions of this subpart shall augment the use of process wastewater or otherwise dilute the wastwater as a partial or total substitute for adequate treatment to achieve compliance with this limitation.

§ 433.17 Pretreatment standards for new sources (PSNS).

(a) Except as provided in 40 CFR 403.7, any new source subject to this subpart that introduces pollutants into a publicly owned treatment works must comply with 40 CFR Part 403 and achieve the following pretreatment standards for new sources (PSNS):

PSNS

Pollutant or pollutant property	Maximum for any 1 day	Monthly average shall not exceed
	Milligrams per liter (mg/l)	
Cadmium (T)	0.11	0.07
Chromium (T)	2.77	1.71
Copper (T)	3.38	2.07
Lead (T)	0.69	0.43
Nickel (T)	3.98	2.38
Silver (T)	0.43	0.24
Zinc (T)	2.61	1.48
Cyanide (T)	1.20	0.65
TTO	2.13	

(b) Alternatively, for industrial facilities with cyanide treatment, and upon agreement between a source subject to these limits and the pollution control authority, the following amenable cyanide limit may apply in place of the total cyanide limit specified in paragraph (a) of this section:

Pollutant or pollutant property	Maximum for any 1 day	Monthly average shall not exceed
	Milligrams per liter (mg/l)	
Cyanide (A)	0.86	0.32

(c) No user subject to the provisions of this subpart shall augment the use of process wastewater or otherwise dilute the wastewater as a partial or total substitute for adequate treatment to achieve compliance with this limitation.

(d) An existing source submitting a certification in lieu of monitoring pursuant to § 433.12 (a) and (b) of this regulation must implement the solvent management plan approved by the control authority.

§ 433.18 [Reserved]

[FR Doc. 83-18619 Filed 7-14-83; 8:45 am]
BILLING CODE 6560-50-M

APPENDIX C

METRIC-ENGLISH UNITS CONVERSION

English		Metric
1 horsepower (HP)	=	745.7 Watts
1 gallon	=	0.0037854 m^3
1 gallon	=	3.7854 L
1 ft	=	0.3048 m
1 ft^2	=	0.0929 m^2
1 ft^3	=	0.0283 m^3
1 GPD/ft^2	=	0.0407 m^3/day/m^2
1 lb/gallon	=	1.20×10^5 mg/L
1 ft/sec	=	18.288 m/min
1 lb	=	453.59 g.