625377009C

Controlling Pollution from the Manufacturing and Coating of Metal Products

Water Pollution Control

Do not WEED. This document should be retained in the EPA Region 5 Library Collection.

EPA Technology Transfer Seminar Publication

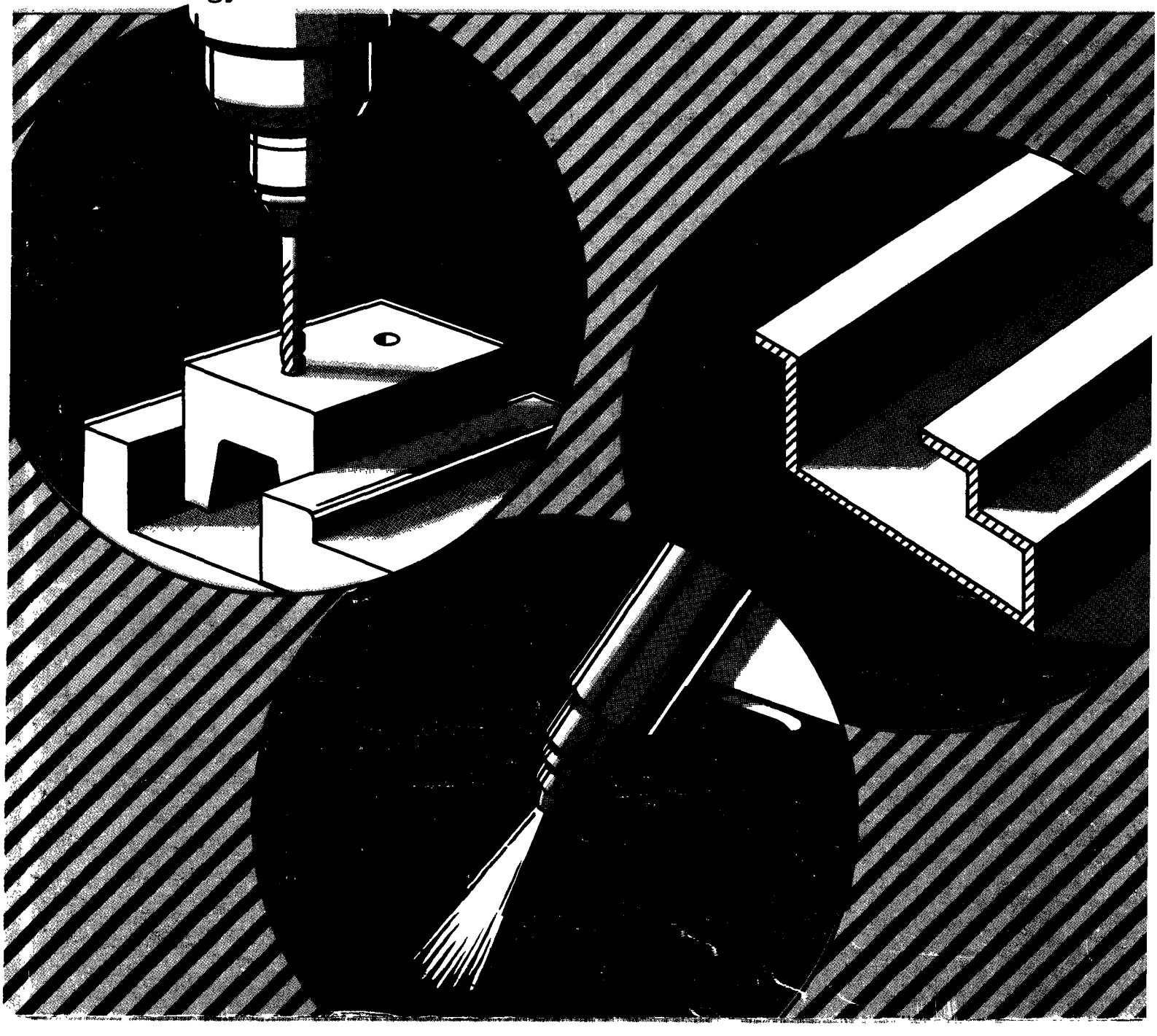

EPA-625/3-77-009

CONTROLLING POLLUTION FROM THE MANUFACTURING & COATING OF METAL PRODUCTS

Water Pollution Control

U.S. ENVIRONMENTAL PROTECTION AGENCY
Environmental Research Information Center • Technology Transfer

MAY 1977

U.S. Environmental Protection Agency
Region 5, Library (PL-12J)
77 West Jackson Boulevard, 12th Floor
Chicago, IL 60604-3590

ACKNOWLEDGMENTS

This seminar publication contains materials prepared for the U.S. Environmental Protection Agency Technology Transfer Program and has been presented at Technology Transfer design seminars throughout the United States.

The technical information in this publication was prepared by Centec Consultants of Reston, Virginia.

NOTICE

The mention of trade names or commercial products in this publication is for illustration purposes, and does not constitute endorsement or recommendation for use by the U.S. Environmental Protection Agency.

U.S. Environmental Protection Agency

CONTENTS

	Page
Chapter I — INTRODUCTION	1
Chapter II — REVIEW OF PL 92-500	2
Effluent Guidelines and New Source Performance Standards	2
The National Pollutant Discharge Elimination System	3
Self-Monitoring	4
Pretreatment Requirements for Discharge into Municipal Systems	5
Cost-Recovery Charges	5
Toxic Substances	5
Ocean Disposal	6
Oil and Hazardous Materials Spills	6
Thermal Discharges	6
Water Quality Standards	6
Aids to Manufacturers	7
Research and Development	7
Steps for Compliance	7
General Wastewater Characteristics	8
Chapter III — IN-PLANT CONTROLS	20
Waste Survey	20
Flow Reduction	25
Flow Equalization	34
Water Reuse	38

Page

Recycling 38

Summary 42

Chapter IV -- RELATIONSHIP WITH THE MUNICIPAL SYSTEM 43

Regulatory Requirements for Pretreatment 43

Industrial Cost Recovery 45

The Economics of Pretreatment 47

Chapter V — WASTEWATER TREATMENT 50

Primary Cleanup (Grit and Free-Oil Removal) 53

Wastewater Conditioning 57

Coagulation Equipment 81

The Sedimentation Process 83

Filtration 101

Further Solids Concentration 105

Chapter VI — RESIDUAL OIL AND GREASE 109

Oil Properties Affecting Removal 109

Mechanisms for Separation 111

Separation Equipment 112

Equipment Costs 120

Chapter VII — HANDLING WASTE-ACID STREAMS 124

Neutralization 124

Acid Recovery 129

Chapter VIII — INDUSTRIAL CASE HISTORY 134

REFERENCES 140

FIGURES

Figure		Page
1	5-Day Waste Stream Variation	22
2	Short Circuiting	28
3	Counter Current Rinsing (Tanks)	31
4	Effect of Added Rinse Stages on Water Use	32
5	Counter Current Rinsing (Dip and Spray)	34
6	Two Spraying Methods	35
7	Flow Variations within a Plant	36
8	Flow Equalization	37
9	Examples of Recycle Systems	39
10	White Sidewall Grinding	41
11	Wastewater Components	50
12	Typical Wastewater Treatment System	52
13	Gravity Separator with Grit Removal	54
14	Floating Skimmer	55
15	API Separator	56
16	Common Skimming Devices	58
17	Solubility of Heavy Metals as a Function of pH	61
18	Jar Test Apparatus	63
19	Typical Settling Curves Obtained from Jar Tests	64
20	Zeta Meter Apparatus	66
21	Predicting Optimum Coagulant Dosage	67

Figure		Page

22	Lime Slaking Equipment	70
23	Lime Feed System	71
24	Liquid Handling System	77
25	Typical Solids Feed Equipment	78
26	Common Metering Pumps	80
27	Typical Chemical Mixing Patterns	82
28	Flocculation Equipment	84
29	Typical Wastewater Treatment System	85
30	Sedimentation System Showing Various Zones of Settling	87
31	Settling Velocities in an Ideal Sedimentation Basin	88
32	Four Zones of a Sedimentation Basin	90
33	Effective Settling Area for Circular and Rectangular Basins	91
34	Relation of Overflow Rates to Surface Area and Flow Rate for Rectangular Basins	92
35	Center-Feed Circular Clarifier	93
36	Circular Basin Flow Patterns	94
37	Combination of Processes within a Clarifier	95
38	Rectangular Clarifier Basin	96
39	Clarifier with Enlarged Sludge Zone for Thickening	97
40	Tube Settler	98
41	Plate Separator	99
42	Thickening Equipment on Plate Settlers	100
43	Approximate Costs for Circular Basin Clarification Equipment	102
44	Installed Costs for Tube or Plate Clarification Equipment	103

Figure		Page

45 Filters 104

46 Rotary Drum Vacuum Filter 106

47 Operating Zones of a Vacuum Filter 106

48 Centrifuge 108

49 Plate-Type Coalescing Oil-Water Separator 113

50 Packed Oil-Water Separators 114

51 Cartridge-Type Coalescing Oil-Water Separator 115

52 Carbon Adsorption 118

53 Ultrafiltration Process 119

54 Capital Cost vs. Flow Rate of Oil-Water Separators of API Specifications 121

55 Capital Cost vs. Flow Rate for Various Oil-Water Separators . . . 122

56 Capital Costs for Ultrafiltration of Oil-Water Mixtures 123

57 pH Scale—Concentration of H^+ at Various pH Values 125

58 Neutralization Systems 127

59 Diversion Pond to Control pH 128

60 Pickling System with Acid Recovery Unit 131

61 Atlantic Wire Water Flow System 135

62 Batch Sulfuric Acid Recovery Unit 136

63 Atlantic Wire Neutralization System 138

TABLES

Table		Page
1 - 9	Raw Waste Characteristics (for various subcategories):	
1	Casting and Molding	11
2	Mechanical Material Removal	12
3	Metal Forming (except plastics)	13
4	Physical Property Modifications	14
5	Assembly Operations	15
6	Chemical - Electro-Chemical Operations	16
7	Material Coating	17
8	Smelting and Refining	18
9	Molding and Forming (plastics)	19
10	Cost Comparisons for Treatment of Process and Nonprocess Water	29
11	Economics of Staged Rinsing for One Set of Conditions	33
12	Summary of Recycle Study	42
13	Preliminary Analysis of Pretreatment Economics	48
14	Polyelectrolytes	73
15	Cost Comparison of Common Commercial Alkaline Agents	130
16	Operating Cost Comparison of Pickle Liquor Waste Treatment Methods	132
17	Discharge Composition	139

CHAPTER I

INTRODUCTION

This volume addresses, for the most part, managers, engineers, and other industry personnel responsible for resolving the water pollution problems of a manufacturing facility. At present, this means complying with the requirements of the Federal Water Pollution Control Act Amendments of 1972 (PL 92-500). We assume here that, although you want to meet the requirements of PL 92-500, your basic interest lies in turning out a product at a profit. We also realize that you are not interested in starting a new career in pollution control. Thus, the discussion will be limited to the practical aspects of compliance, with emphasis on minimizing costs and avoiding disruption of the manufacturing process.

A viable, cost-effective pollution control plan must be based on detailed familiarity with both plant operations and pollution control technology. Obviously, you bring the first of these requisites to your plant's pollution control effort. The object of this volume is to discuss the control techniques themselves—and the physical and chemical principles underlying them—in enough detail that you can work knowledgeably with consultants, suppliers, and other experts who may assist in planning for wastewater compliance.

The volume has a general, five-part format: (1) a summary of current regulations affecting the industry, discussion of those likely to be issued, and some pointers that may enable your plant to avoid classification in the more restrictive categories; (2) a presentation of techniques for resolving water pollution problems at the source, through in-plant controls; (3) suggestions for establishing the most advantageous relationship with the municipality; (4) a presentation of three methods for wastewater treatment; and (5) a brief case history of one metal-products plant in achieving compliance and in upgrading its controls to meet new requirements.

In summary, this volume, supplemented by references from the bibliography, will serve as a practical guide to the regulatory requirements and the technology available for meeting them. It has been prepared for the U.S. Environmental Protection Agency Technology Transfer Seminar Series for manufacturers in the broad industrial category of metal machining, fabricating, and coating. Readers are also referred to other publications in the Series, including specific volumes on emissions control for the metal coating and metal cleaning industries and a volume on management perspectives.

CHAPTER II

REVIEW OF PL 92-500

PL 92-500 is a complex law covering a wide range of regulations on water pollution control. For the average manufacturer, however, the key points are those relating to the discharge of industrial wastewater to waterways or public systems. A summary of these points follow.

EFFLUENT GUIDELINES AND NEW SOURCE PERFORMANCE STANDARDS

For the manufacturing community, the most far-reaching feature of the law is the requirement that all industries discharging waste into waterways must implement a base level of pollution control by July 1, 1977. EPA was directed to establish the amount of pollution reduction that could be obtained by application of the "best practicable control technology currently available" (BPCTCA/BPT). This base level of effluent reduction is to be met by all point sources discharging into waterways.

The law also required that EPA establish the level of pollution reduction achievable from a more advanced technology, called "best available technology economically achievable" (BATEA/BAT). This will be required of all point sources by 1983. Further, a new standard, also calling for advanced technology, is to be applied to any facility constructed after regulations for new sources are proposed. This will involve "best available demonstrated control technology, processes, operating methods, and other alternatives including, where practicable, a standard permitting no discharge of pollutants" (New Source Requirements).

In effect, then, EPA is to set three levels of performance for each industrial subcategory:*

- For existing plants to meet in 1977 ("BPT" or "BPCTCA")
- For existing plants to meet in 1983 ("BAT" or "BATEA")
- For new plants ("New Source Requirements")

Another significant point is that EPA is also to set pretreatment standards for plants discharging to public systems.

*One of the controversial aspects of the law has been disagreement as to the degree of stringency indicated by various terms used to describe the expected level of pollution control. This publication does not address this aspect of PL 92-500 and is strictly limited to providing a basic understanding of the law and the technology available for pollution control.

If the application of BPCTCA pollution control techniques by all sources discharging into a watercourse is inadequate to effect established water quality standards, both EPA and the state involved are authorized to impose even more stringent pollution control requirements. In all cases, the states are authorized to impose requirements more stringent than the federal guidelines. Plants located on "water quality limited streams" may be required to install additional pollution control.

PL 92-500 directed EPA to set standards for manufacturers that were to be met nationally, regardless of location. This was done to simplify government administration and to prevent the establishment of "pollution havens" in states anxious to attract industry. In effect, all industries were told to apply a base level of pollution control technology, regardless of the nature and use of a waterway.

THE NATIONAL POLLUTANT DISCHARGE ELIMINATION SYSTEM

The key to enforcing PL 92-500 is the National Pollutant Discharge Elimination System (NPDES). This provision of the law establishes the activities of the EPA programs, which began with the 1899 Refuse Act. While the states retain primary responsibility for combating water pollution, they must do so within a specific federal framework. If the states cannot, or do not choose to, establish programs for meeting federal requirements, the federal government assumes the responsibility.

The heart of the system is the NPDES permit. This is the mechanism by which the federal government ensures that all of the requirements of PL 92-500 are being met. Each point source discharging into a waterway must apply for a permit. Manufacturers discharging to municipalities come under other provisions, but are also regulated. Permit applications filed previously under the 1899 Refuse Act are considered valid under PL 92-500.

Through either the state or the federal EPA offices (depending upon the status of the state permit program), a manufacturer discharging into a waterway must obtain a permit, which spells out the following conditions:

- The pollutants that may be legally discharged. (The average and maximum daily amounts will be specified. These amounts may be derived from the effluent guidelines for the industry, from the requirements for toxic substances, or from requirements derived from water quality standards.)
- A compliance schedule, with the specific steps the manufacturer must take to achieve the best practicable control technology by July 1, 1977, in conformance with the law.
- A listing of the monitoring and reporting requirements stipulated by both EPA and the state.
- The period for which the permit is valid, not to exceed 5 years.

Moreover, all permits are issued subject to the following conditions:

- The permit holder must report any new or increased discharges.
- Any discharge of a new pollutant, or excessive discharge of an authorized pollutant, will be a violation of the permit.
- The permit may be modified, suspended, or revoked if its terms are violated or if it was obtained by misrepresentation or failure to disclose all relevant facts.
- The permit holder will allow EPA or state water pollution control officials to enter and inspect the plant, the required records, and the monitoring equipment. Samples of discharges can also be taken for EPA analysis.
- The permit holder will keep his pollution control systems in good working order.

The federal government is given ample authority to ensure compliance with the conditions of the permit. If violations of permits issued by the states are not followed by appropriate enforcement action, the EPA can, after 30-days' notice, initiate its own action. The law further states that any person who willfully or negligently violates any permit condition shall be punished by a fine of not more than $25,000, by imprisonment for not more than 6 months, or both. In this case, the term "person" means any responsible corporate officer.

SELF-MONITORING

In order to provide regulatory officials with information for establishing effluent standards and for maintaining records on the amounts of pollutants being discharged, a manufacturer may be required to monitor his own plant wastes in a manner to be specified by EPA. The manufacturer must keep adequate records to be provided to EPA on request or on an established schedule.

EPA also has the right, upon presenting proper credentials, to visit any manufacturing site and examine records, check sampling and monitoring equipment, and take any samples required for checking the results submitted by the manufacturer. All this information becomes public except where it is established that public access would reveal trade secrets or proprietary information. In this case, access will be limited to regulatory officials.

This "self-monitoring" requirement plays a very important part in the implementation of controls on manufacturers. Penalties for refusing to comply, or for falsifying information, are severe. EPA also can require a manufacturer to provide information to assist it in developing guidelines. Requests from EPA for such information are known as "308 letters," after Section 308 of the law, which authorizes them.

Each state may develop its own procedures for inspection, monitoring, and entry. After EPA approval, the state will be authorized to carry out its procedures in the same manner as the EPA.

PRETREATMENT REQUIREMENTS FOR DISCHARGE INTO MUNICIPAL SYSTEMS

The law also firmly establishes federal control over the operation of municipal treatment plants by requiring municipal systems to obtain discharge permits under NPDES. The law specifically directs EPA to develop pretreatment standards for industrial discharges into publicly owned treatment works (POTWs). These standards will prevent the introduction of pollutants determined to be nonsusceptible to treatment in the municipal system or to hamper the operation of the municipal treatment works. For new plants, the law also requires that EPA develop pretreatment standards simultaneously with effluent discharge standards. Compliance with these standards will be required within 3 years after their promulgation.

COST-RECOVERY CHARGES

Under PL 92-500, the federal government pays 75 percent of the total construction costs for municipal treatment systems. Since many states contribute an additional 15 percent of the cost of municipal systems, many cities will be required to contribute only 10 percent of the cost under the new law. Before the federal share can be approved, however, the municipality must show that a plan has been developed to recover a proportionate share of the total federal construction costs from any industrial users. EPA is directed to develop guidelines enabling municipalities to arrive at cost allocation systems that meet requirements of the law. In the past, municipalities only recovered the local share of the cost from industry; now they must also recover the federal costs. Thus, there will be a sharp rise in industrial charges for the use of municipal systems.

TOXIC SUBSTANCES

PL 92-500 contains a special section for dealing with substances designated as toxic. Effluent standards or total prohibitions of these pollutants are to be established under criteria that take into account toxicity, persistence, degradability, likelihood of affected organisms in the water, nature and extent of the substance on the organisms, and the importance of affected organisms.

EPA was directed to prepare a list of substances to be designated as toxic and to develop effluent standards for their control. This has proved to be a difficult task. There is, however, a proposed list of toxics with allowable discharges.

OCEAN DISPOSAL

The law directs EPA to establish guidelines for determining the degradation of the oceans, territorial seas, and contiguous zones. Based on these guidelines, ocean discharge permits will be issued.

OIL AND HAZARDOUS MATERIALS SPILLS

EPA is directed to designate as hazardous compounds, and to develop regulations for, any substances which, when discharged in quantity to the navigable waters, will "present an imminent and substantial danger to the public health and/or welfare including, but not limited to, fish, shellfish, wildlife, shorelines, and beaches." EPA also was to determine if such substances, once spilled, can actually be removed.

The proposed regulations for hazardous materials have only recently been issued. For manufacturers who routinely handle or ship oil or hazardous materials, this provision of the law is extremely important.

THERMAL DISCHARGES

The law specifically addresses thermal discharges. States are required to provide estimates of the maximum thermal load that could be tolerated by waters within their jurisdictions without harming shellfish, fish, and wildlife.

Any manufacturing facility that can demonstrate to EPA that the prescribed use of cooling towers or other technology to cool its discharges is in excess of that required to protect fish, shellfish, and wildlife will not be required to employ that technology.

Where cooling and water intake structures are needed, the law specifies that they shall be designed to minimize the environmental impact.

These provisions are important for large industries using large amounts of water, such as the power industry. In general, medium and small manufacturers have not been affected by the requirements for thermal pollution control.

WATER QUALITY STANDARDS

In addition to the level of pollution control that may be established as the result of the "best practicable pollution control technology currently available," the law allows even more severe restrictions when the use of this control technology by all dischargers fails to raise the quality of the water to an acceptable standard. In these cases, the permit will be based on a level of treatment that the regulatory agency determines is required to meet the water quality criteria.

PL 92-500 set up two outside organizations to provide an overview of EPA's activities. The first is the Effluent Standards Water Quality Information Advisory Committee (ESWQIAC), composed of a chairman and eight members who are appointed by the Administrator of EPA. They are selected from the scientific community and are to be "qualified by education, training and experience to provide, assess and evaluate scientific and technical information on effluent standards and limitations."

The second outside organization is the National Commission on Water Quality, created to conduct a "full and complete" investigation of all the technological, economic, social, and environmental effects of achieving—or not achieving—the effluent discharge goals for 1983 (Best Available Technology Economically Achievable).

This Commission consists of five members of the Senate Public Works Committee, five members of the House Public Works Committee, and five from the public sector appointed by the President. The heads of all departments and agencies of the executive branch of the federal government were directed to cooperate with the Commission.

In brief, while the National Commission on Water Quality is to address itself to long-term goals, ESWQIAC is responsible for an overview of the more immediate effluent guidelines requiring that the "best practicable" control technology be installed by 1977; it advises the Administrator of EPA.

AIDS TO MANUFACTURERS

PL 92-500 amended the Small Business Act to allow the Small Business Administration (SBA) to make loans assisting small business firms in meeting the requirements of the law. The applicant must furnish the Small Business Administration with a written statement from EPA that additions or alterations are necessary and will be adequate for compliance. For this purpose, up to $800 million can be appropriated to SBA disaster funds.

RESEARCH AND DEVELOPMENT

EPA was authorized to continue a research and development program, authorized under previous legislation, for developing new techniques to control industrial wastes and for studies to determine the actual effects of pollutants on the ecology of streams. Grants of up to 70 percent of the cost can be given to industries or municipalities that implement advanced concepts.

STEPS FOR COMPLIANCE

There are five basic rules for resolving the water pollution problems of a manufacturing facility. If they are kept in mind, the manager should be able to comply with PL 92-500 in a manner that is responsible, yet cost effective:

1. Make sure you understand exactly what is required. Although this may seem basic, in actual practice it is often complex. Many plants have had unpleasant surprises because of misunderstandings with the regulatory agency. The environmental manager or engineer must have a thorough knowledge of which streams are to be monitored and of the required sampling and analytical procedures. As will be discussed later, the difference between "process" and "nonprocess" wastes is often critical and can affect the entire program. It is important to both EPA and the manufacturer that the technical basis for the permit be mutually understood. If there are any misconceptions, it is far cheaper to resolve them at this early stage.

2. Know the current situation at your plant. The discovery of a new waste source or of unexpected wastewater variations after control equipment has been ordered—or worse yet, installed—is embarrassing and expensive. Yet it happens frequently. To avoid it, make a firm commitment at the outset to thoroughly analyze the wastewater characteristics of your plant.

3. Formulate a balanced, realistic program of in-plant and end-of-pipe treatment technology. There are many in-plant changes (to be discussed later) that can reduce the pollutants requiring treatment and cut costs. End-of-pipe treatment, on the other hand, requires less interference with the manufacturing process. For a good pollution control program, evaluate realistically what can be expected from in-plant programs and improved operator awareness, and arrive at an economic balance between in-plant controls and discharge treatment.

4. Keep the regulating agencies informed of your progress. State and federal agencies want to see advances toward water pollution control. However, for reasons beyond your control, you may not be able to meet all your deadlines. Missing a date on a compliance schedule is less of a problem if the agencies are kept aware of the reasons. Many of the confrontations between plants and the regulatory agency are due to misunderstandings that can and should be minimized.

5. Keep monitoring your pollution control systems. It is common for these systems to lose ground after initial success. Flows and pollutants change and the operating conditions for which the equipment was designed are forgotten. This is especially true for in-plant control techniques, where old habits may soon creep back. The NPDES monthly report is a constant reminder not to let conditions regress to the point where permit violations begin to occur. Unfortunately, deterioration of a finely tuned pollution control program can often take weeks or months to correct. To avoid this effort and expense, it is essential that the entire program be maintained.

GENERAL WASTEWATER CHARACTERISTICS

The machinery and mechanical products industries make up the broadest category of manufacturers for which EPA is developing effluent guidelines. In the EPA Development Document,[2] the diverse industries in this category are subclassified according to

the major operations of metal machining, fabricating, and coating. Because of the variety of products, raw materials, and plant sizes and locations, a single listing of wastewater characteristics is impossible.

The EPA contractor who did a study of the industry to provide data for establishing effluent guidelines divided it into 12 subcategories.[2] Tables 1-9 at the end of this chapter list the "typical" waste characteristics for the nine subcategories that are particularly relevant to metal machining, fabricating, and coating operations. The values in these tables are important for the manufacturer as an indication of the difficulties he may face in meeting any EPA limitation. The problems will be greater if the wastewater flow is unusually high. Since most pollutant limitations are specified by both EPA and the states in terms of total pounds (obtained by multiplying a model flow by a concentration), the plants with large flows per unit of production will have to attain lower concentrations to keep within the limits allowed.

Basically, the major pollutants targeted for control in 1977 in the Municipal Programs Category are suspended solids, oil and grease, heavy metals, cyanides, and possibly some organic chemicals.* The technology for controlling these pollutants is generally well-established, although obtaining the best performance under each plant's specific conditions requires a separate evaluation.

There are several characteristics of plant-water discharges—not shown in these tables—that are vital to the pollution control program and that should be understood by anyone involved in a water pollution control effort. These are the distinction between "process" and "nonprocess" wastewater and the plant's wastewater variations.

PROCESS AND NONPROCESS WASTEWATER

Process wastewater is water that comes in contact with pollutants as part of the manufacturing process. Water used to rinse work being pickled in acid is an example. This water is directly regulated by the effluent limitations.

Nonprocess wastewater is water that does not normally come in contact with pollutants. Once-through cooling water used in heat exchangers is an example of nonprocess water, which is not monitored or regulated with the same stringency as process wastewater. For example, noncontact cooling water is usually only monitored for temperature. There is, of course, an indeterminate area involving water that sometimes becomes slightly contaminated.

The designation of water as process or nonprocess can have significant consequences for the control program. The manager should strive to prevent the contamination of any large stream that is basically clean so that it will have a nonprocess classification. Means for accomplishing this will be discussed in the next chapter.

*Control of the pollutants introduced by metal finishing operations (such as cyanides and chromium) are covered in a separate EPA Technology Transfer Publication for pollution control in metal finishing, which is not discussed here.

The mixing of process and nonprocess waste streams is a major reason for the wide range of waste flows shown in the tables for most categories.

SINGLE-PLANT WASTEWATER VARIATIONS

In addition to separation of process and nonprocess water, another factor of extreme importance is variability of wastewater flows. This is the single most common reason that pollution control systems fail to live up to expectations and performance. Consideration of flow equalization methods to reduce the variability of the wastewater must be made. The ranges shown in Tables 1-9 refer to variations between plants. The manager or engineer must know how the waste characteristics vary within his own plant. This will also be discussed in the next chapter.

Table 1

Raw Waste Characteristics
Subcategory 1 — Casting & Molding
(variations among plants)

Parameter[a]	Minimum	Maximum	Mean
pH*	2.2	10.0	—
Turbidity (JTU)[b]	25	1200	576.4
Temperature	10°C	63°C	23.2°C
Dissolved Oxygen	1.0	12.0	5.9
Sulfide	.010	4.0	.6
Cyanide	.007	.007	.007
Total Solids	155	28770	3625.4
Total Suspended Solids*	6	28390	
Settleable Solids	.20	40	11.5
Cadmium*	.002	.443	.044
Chromium, total	.005	.049	.025
Chromium, hexavalent	.005	.020	.011
Copper*	.014	104.3	9.7
Fluoride	.500	14	6
Iron, total*	.200	95	13.8
Iron, dissolved	.100	75.3	11.7
Lead*	.010	5.6	.61
Oil, Grease*	1.75	13510	1046.8
COD*	54	20630	1746.7
Total Phosphates	16.7	40000	2425.7
Zinc*	.020	146.4	10.85
Boron	.100	21.3	2
Mercury	.002	.005	.003
Nickel*	.004	51.3	4.7
Silver*	.002	.21	.019
Flow (for a production floor area of 200,000 ft^2) — 317,000 GPD			

* Under consideration for regulation by national effluent guidelines.
(a) All parameters measured in mg/liter except pH, turbidity, and temperature.
(b) Jackson Turbidity Units.

Table 2

Raw Waste Characteristics
Subcategory 2 — Mechanical Material Removal
(variations among plants)

Parameter[a]	Minimum	Maximum	Mean
pH*	2.1	12.3	—
Turbidity (JTU)[b]	.380	3800	340
Temperature	2°C	65°C	22.7°C
Dissolved Oxygen	2.0	12	7.5
Sulfide	.01	24	1.2
Cyanide	.01	.425	.072
Total Solids	40.5	28770	2647
Total Suspended Solids*	2.4	28390	1223.6
Settleable Solids	.200	40	5.4
Cadmium*	.002	61	2.4
Chromium, total*	.005	400	19
Chromium, hexavalent	.005	.033	.009
Copper*	.016	184.6	4.5
Fluoride*	.130	240	8.5
Iron, total*	.103	95	9
Iron, dissolved	.003	75.3	6.2
Lead*	.006	103	2.04
Oil, Grease*	.400	13510	668.2
COD*	3.7	40000	3087.4
Total Phosphates*	.200	92	10.2
Zinc*	.020	181	7.2
Boron	.030	21.3	2.3
Mercury*	.003	.003	.003
Nickel*	.004	93.5	3.3
Silver	.002	.010	.004
Flow (for a production floor area of 200,000 ft^2) — 45000 GPD			

* Under consideration for regulation by national guidelines.
(a) All parameters measured in mg/liter except pH, turbidity, and temperature.
(b) Jackson Turbidity Units.

Table 3

Raw Waste Characteristics
Subcategory 3 — Metal Forming (except plastics)
(variations among plants)

Parameter[a]	Minimum	Maximum	Mean
pH*	1.5	12.0	—
Turbidity (JTU)[b]	2.2	3800	472.4
Temperature	12°C	65°C	24°C
Dissolved Oxygen	1.0	12.0	5.6
Sulfide	.010	6.4	.645
Cyanide	.020	1.8	.523
Total Solids	155	63090	5294
Total Suspended Solids*	2.0	11990	1034
Settleable Solids	.20	40	8.5
Cadmium	.002	.43	.064
Chromium, total	.005	.417	.085
Chromium, hexavalent	.005	.030	.011
Copper*	.016	145	8.5
Fluoride	.120	1.8	.73
Iron, total*	.110	600	29.4
Iron, dissolved	.030	250	14.3
Lead*	.010	103	2.7
Oil, Grease*	.500	8056	600
COD*	1.0	19170	2826.5
Total Phosphates*	.20	45.4	6.5
Zinc*	.020	146.4	10.7
Boron	.030	16.3	1.5
Mercury	.002	.002	.002
Nickel*	.004	165.2	5.8
Silver*	.002	.044	.005
Flow (for a production floor area of 200,000 ft^2) — 63,400 GPD			

* Under consideration for regulation by national guidelines.
(a) All parameters measured in mg/liter except pH, turbidity, and temperature.
(b) Jackson Turbidity Units.

Table 4

Raw Waste Characteristics
Subcategory 4 — Physical Property Modifications
(variations among plants)

Parameter[a]	Minimum	Maximum	Mean
pH*	2.1	12.0	—
Turbidity (JTU)[b]	1.5	3800	349
Temperature	13°C	87°C	24°C
Dissolved Oxygen	4.0	12.0	6.9
Sulfide	.010	6.4	.56
Cyanide*	.010	900	67.2
Total Solids	151	12280	2016.1
Total Suspended Solids*	.400	11990	715.8
Settleable Solids	.200	40	6.3
Cadmium	.003	.012	.006
Chromium, total	.005	.013	.008
Chromium, hexavalent	.005	.005	.005
Copper	.129	.952	.434
Fluoride	3.2	3.2	3.2
Iron, total*	.077	422.2	14.5
Iron, dissolved	.030	80	5.9
Lead*	.012	102.8	2.7
Oil, Grease*	.400	13510	681.4
COD*	1.0	18070	2357
Total Phosphates	.600	.600	.600
Zinc	.120	1.7	1.2
Boron	.030	16.3	1.5
Mercury	.010	.010	.010
Nickel*	.004	17.7	1.2
Silver	.003	.003	.003
Flow (for a production floor area of 200,000 ft^2) — 190,000 GPD			

* Under consideration for regulation by national guidelines.
(a) All parameters measured in mg/liter except pH, turbidity, and temperature.
(b) Jackson Turbidity Units.

Table 5

Raw Waste Characteristics
Subcategory 5 — Assembly Operations
(variations among plants)

Parameter[a]	Minimum	Maximum	Mean
pH*	1.8	11.5	—
Turbidity (JTU)[b]	2.2	3800	379
Temperature	2°C	63°C	
Dissolved Oxygen	1.0	12.0	6.25
Sulfide	.010	4.8	.345
Cyanide	.048	.192	.120
Total Solids	165	28770	2578
Total Suspended Solids*	6.3	28390	1060.8
Settleable Solids	.002	60.9	1.3
Cadmium*	.002	60.9	1.3
Chromium, total	.005	.026	.015
Chromium, hexavalent	.005	.007	.005
Copper*	.013	184.6	3.5
Fluoride*	.110	325	14.7
Iron, total*	.070	95.4	9.6
Iron, dissolved	.030	77.5	7.6
Lead*	.007	102.8	3.3
Oil, Grease*	.400	13510	720
COD*	11.6	40000	2435.9
Total Phosphates*	.250	62.4	8
Zinc*	.020	33.9	2.9
Boron	.030	17	1.9
Mercury*	.002	.055	.012
Nickel*	.004	93.5	2.3
Silver*	.002	.052	.005
Flow (for a production floor area of 200,000 ft^2) — 32,000 GPD			

* Under consideration for regulation by national guidelines.
(a) All parameters measured in mg/liter except pH, turbidity, and temperature.
(b) Jackson Turbidity Units.

Table 6

Raw Waste Characteristics
Subcategory 6 — Chemical - Electro-Chemical Operations
(variations among plants)

Parameter[a]	Minimum	Maximum	Mean
pH*	.9	7.4	—
Turbidity (JTU)[b]	1.2	500	112
Temperature	10°C	65°C	21°C
Dissolved Oxygen	4.0	12.0	7.5
Sulfide	.100	1.2	.414
Cyanide	.019	.20	.105
Total Solids	151	54210	5531.8
Total Suspended Solids*	1.6	16560	837.2
Settleable Solids	.150	18	7.8
Cadmium	.002	.029	.011
Chromium, total*	.005	119.1	11.5
Chromium, hexavalent*	.005	89.6	3.8
Copper*	.017	155.4	22.9
Fluoride*	.150	7.4	1.6
Iron, total*	.023	600	30.4
Iron, dissolved	.138	26.6	4.7
Lead	.018	2.0	.241
Oil, Grease*	.40	1730	97
COD*	1.0	6040	419
Total Phosphates	.200	17.5	6.2
Zinc	.153	164.3	29.8
Boron	.120	1.8	.416
Mercury	.008	.008	.008
Nickel	.006	84.5	7.2
Silver	.002	.010	.005
Flow (for a production floor area of 43,000 ft^2) — 285,000 GPD			

* Under consideration for regulation by national guidelines.
(a) All parameters measured in mg/liter except pH, turbidity, and temperature.
(b) Jackson Turbidity Units.

Table 7

Raw Waste Characteristics
Subcategory 7 — Material Coating
(variations among plants)

Parameter[a]	Minimum	Maximum	Mean
pH*	1.5	11.3	—
Turbidity (JTU)[b]	.300	3800	395.6
Temperature	9°C	63°C	23.3°C
Dissolved Oxygen	1.0	12.0	7.0
Sulfide	.010	24	1.3
Cyanide	.010	1.6	1.03
Total Solids	35	63090	2917.9
Total Suspended Solids*	.200	28390	917.8
Settleable Solids	.200	40	10.5
Cadmium*	.002	60.9	2.1
Chromium, total*	.005	400	20.1
Chromium, hexavalent*	.005	36.4	1.5
Copper*	.011	1060	21.1
Fluoride*	.130	110	6.8
Iron, total*	.103	422.2	21.6
Iron, dissolved	.003	367.7	17.9
Lead*	.006	102.8	1.7
Oil, Grease*	.500	13510	545.2
COD*	3.7	40000	1837
Total Phosphates*	.200	62.4	9.5
Zinc*	.020	86.5	4.6
Boron	.050	21.3	2.5
Mercury*	.002	.055	.012
Nickel	.007	.950	.207
Silver*	.002	.100	.007
Flow (for a production floor area of 107,000 ft^2) — 108,000 GPD			

* Under consideration for regulation by national guidelines.
(a) All parameters measured in mg/liter except pH, turbidity, and temperature.
(b) Jackson Turbidity Units.

Table 8

Raw Waste Characteristics
Subcategory 8 — Smelting and Refining
(variations among plants)

Parameter[a]	Minimum	Maximum	Mean
pH*	.39	11.3	—
Turbidity (JTU)[b]	14	1200	258.6
Temperature	11°C	63°C	24.1°C
Dissolved Oxygen	10.0	10.0	10.0
Sulfide	.010	.70	.176
Cyanide	.010	.70	.197
Total Solids	958	32670	7297.6
Total Suspended Solids*	9.3	15110	2088.1
Settleable Solids	.30	40	21.1
Cadmium*	.008	5.8	.8
Chromium, total	.009	.955	.205
Chromium, hexavalent	.005	.120	.020
Copper*	.015	38.4	7.1
Fluoride	.200	1.3	.670
Iron, total*	.109	592.6	96.4
Iron, dissolved	.100	119.7	36.3
Lead*	.020	22.8	4.6
Oil, Grease*	2.8	1335	166.1
COD*	1.00	13510	1650
Total Phosphates	1.3	13.7	4.9
Zinc*	.060	112.9	23.4
Boron	.100	2.1	.831
Mercury*	.003	.089	.032
Nickel*	.028	94.5	16.5
Silver*	.003	.210	.049
Flow (for a production floor area of 200,000 ft^2) — 172,000 GPD			

* Under consideration for regulation by national guidelines.
(a) All parameters measured in mg/liter except pH, turbidity, and temperature.
(b) Jackson Turbidity Units.

Table 9

Raw Waste Characteristics
Subcategory 9 — Molding and Forming (plastics)
(variations among plants)

Parameter[a]	Minimum	Maximum	Mean
pH	—	7.1	—
Turbidity (JTU)[b]	—	—	—
Temperature	25°C	25°C	25°C
Dissolved Oxygen	7.0	7.0	7.0
Sulfide	.100	.100	.100
Cyanide	.100	.100	.100
Total Solids	359.7	359.7	359.7
Total Suspended Solids	4.6	4.6	4.6
Settleable Solids	—	—	—
Cadmium	.002	.002	.002
Chromium, total	.007	.007	.007
Chromium, hexavalent	.005	.005	.005
Copper	.016	.016	.016
Fluoride	—	—	—
Iron, total	.035	.035	.035
Iron, dissolved	—	—	—
Lead	.020	.020	.020
Oil, Grease	3.2	3.2	3.2
COD	24.0	24.0	24.0
Total Phosphates	7.0	7.0	7.0
Zinc	.237	.237	.237
Boron	—	—	—
Mercury	—	—	—
Nickel	—	—	—
Silver	—	—	—
Flow[c]			

* Under consideration for regulation by national guidelines. (Not applicable)
(a) All parameters measured in mg/liter except pH, turbidity, and temperature.
(b) Jackson Turbidity Units.
(c) No process wastewater.

CHAPTER III

IN-PLANT CONTROLS

A common way of reducing the cost of water pollution control is the use of in-plant practices to minimize the pollutants to be treated. There is no doubt that for some plants this is an effective way to keep down control costs and to meet limitations that would otherwise be impossible. It is usually an economic necessity to consider in-plant control techniques before installing a treatment system.

In most plants, however, a point will eventually be reached where the cost of further flow and pollutant reduction by in-plant control becomes too high. Treatment then becomes the only remaining option. This point differs from plant to plant, and each manufacturer must reach a balanced approach for his own facility.

This chapter offers plant managers a five-step approach to determining the economic limits of in-plant controls: waste survey; flow reduction; flow equalization; water reuse; and recycling.

WASTE SURVEY

The first step in any water pollution control project at a manufacturing facility is the wastewater survey. The goal is to understand the waste flows within the plant so that a minimum-cost pollution control program can be devised. The scope of the survey can range from simple monitoring of the outfall for a few days to a detailed analysis of all internal waste flows. In most cases, funds for studying internal waste flows are repaid by savings on the treatment system that result from a better understanding of the sources of pollution.

An excellent starting point for a manager considering either an in-house waste survey or hiring a consultant is the "Handbook for Monitoring Industrial Waste Water," distributed by the U.S. EPA Technology Transfer Program.[4] It contains a good general discussion, in simple language, of the factors to be considered in a waste survey.

The more complete the survey, the more it will cost. Getting all the information you would like to have is almost always too expensive. The manager, therefore, must use judgment in balancing the savings gained from a better understanding of his plant's waste against the cost of the survey.

A general rule will be helpful: It is better to have a few accurate numbers than to have a large volume of uncertain data. Since wastewater flows and characteristics vary considerably over a day (and between days), the initial results of the survey can be confusing. It is important that the sampling and analytical procedures do not add to this confusion.

A waste survey consists essentially of

- Locating and measuring flows;
- Obtaining samples of these flows;
- Protecting the samples until they can be analyzed;
- Analyzing the samples; and
- Analyzing the data obtained.*

Finally, there are certain essential points that the manager should know about sampling, flow measurement, and data analysis, whether the survey is being done in-house or by an outside consultant.

SAMPLING

If a representative specimen is to be obtained, sampling of wastewaters requires much greater precision than the production supervisor normally strives for in his quality-control work. Some of the parameters set for the metals products industry are especially troublesome if not closely watched. A basic consideration is the use of grab samples vs. composite samples.

Grab Samples

A grab sample is very easy to obtain. It is an instantaneous sample of the wastewater and should represent its condition at that exact time. The problems with grab samples occur later, in analyzing their significance. Figure 1 shows the variations of a waste stream over a 5-day period; it is obvious that a grab sample can be far removed from the average or even typical value of a parameter. It is essential, if you are using grab samples, to take enough of them to establish the changes occurring over time.

Composite Samples

A composite sample represents an attempt to measure the true average value of a waste stream over a specific period. Twenty-four-hour composites are common in wastewater control, and many permits will be written requiring this kind of sampling. In these samples, we try to obtain the value we would get if all of the wastewater were collected over a 24-hour period, mixed thoroughly, and then sampled. There are a variety of samplers now on the market that attempt to approximate this value by various abbreviated methods. To reach a composite average, the effect of each sample added to the composite must be weighted according to the flow and composition at the time of sampling. This is called "flow proportioning" and is handled differently by different samplers.**

*References 3, 4, and 9 discuss these steps in detail.
**References 3 and 4 are recommended for excellent discussions of problems and factors involved in sampling.

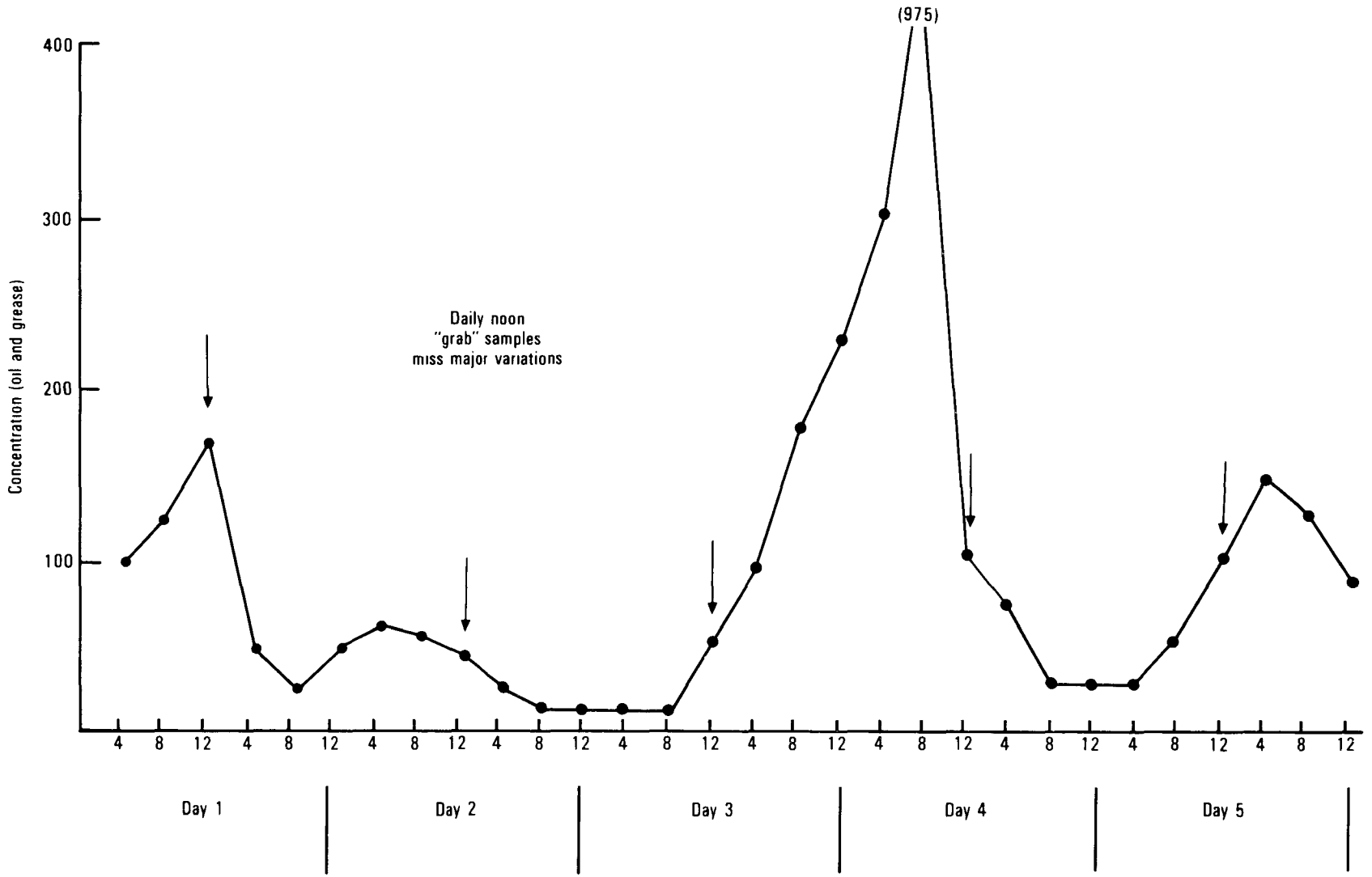

Figure 1. 5-Day Waste Stream Variation (4-hour samples)

The 24-hour composite, being an average value, does not give the actual situation to be faced by the waste treatment system. Reliance on 24-hour composites alone can result in unrealistic and overly optimistic treatment designs. For a comprehensive understanding of your waste stream, a combination of grab and composite samples will be required. A series of grab samples taken over one day shows the hourly variation. The daily composites give the average values and show what probably will be reported to the regulatory agencies.

Plants in the machinery and mechanical products category are being controlled on oil and grease, suspended solids, pH value, and certain metals.

Oil and grease are among the most difficult of all pollutants to sample accurately. There are several reasons for this. First, oil-containing samples have a tendency to deposit oil on the line leading to the sampler, giving low values. If a sample for oil and grease is taken as a composite, the large container used for the 24-hour composite can collect a significant portion of the oil on its walls. When a small portion of this "composite" sample is removed for analysis, the oil remaining on the walls is not counted and a false low value is obtained. For this reason, the EPA Methods Manual[9] recommends that only grab samples be used for oil and grease and that the entire sample should be analyzed. For a true analysis of the waste, many grab samples must be taken.

A more serious problem, causing even greater inaccuracies in oil and grease sampling, is the tendency of oil to form a film on the top of the wastewater stream. A sample taken below this oil film may show false low values of oil, while one from the top of the flowing stream will show overly high values. For an accurate value, the sample must be taken in an area of complete mixing, commonly the turbulent overflow point from weirs.

The situation is further complicated by the tendency of oil from many processes to enter the wastewater system in slugs. Thus, it is entirely possible to take a good sample at one point and to find different values an hour later. In addition, oil accumulating on pipes or on floors may be washed down by a stream of water in one large mass. In sum, the only way to obtain accurate analyses of the oil characteristics of a wastewater stream is by taking a fairly large number of grab samples at one well-mixed point.

Suspended solids can also present sampling problems, although these are not normally as severe as those of oil and grease. Basically, this is due to the difficulty of reaching a low suspended-solids level in the stabilized particles (to be discussed more fully in Chapter V, Wastewater Treatment). These stabilized particles tend to remain in suspension in the waste lines. If a sample is not taken at a well-mixed point, grossly inaccurate values may be obtained and may lead to undersized equipment.

Another problem with suspended-solids analyses is the possibility of destabilization in the sample bottle after long settling times. This problem, however, relates more to getting a representative sample for a settling test than to obtaining analytical results. The sampling methods discussed in Reference 4 should normally assure reasonable values of suspended solids.

The pH value is another parameter that is easy to analyze but that may show great variation over an operating day. Since the pH can affect the nature of both suspended solids and oil and grease, it is important that this value be recorded for all samples taken.

PROTECTION OF SAMPLES

The EPA Methods Manual[9] outlines the protective measures that must be applied to wastewater samples if proper analytical results are to be obtained. The basic rule is that the sample should be analyzed as soon as possible. When this is not feasible, certain preservation methods must be applied. Samples to be analyzed for metals, for example, should be acidified. Make sure that your contractor or your laboratory staff follow these methods.

ANALYTICAL TECHNIQUES

Analytical techniques for wastewater are well-developed. The EPA Methods Manual is the bible for these techniques. If your samples are being run in an independent laboratory, verify that it employs EPA methods; if not, find out why not, and the possible adverse effects. Although the values reported on your NPDES permit must stringently follow the EPA methods, samples taken in-plant for planning your treatment system are not subject to this restriction. In some cases, your laboratory may be able to recommend cheaper analytical techniques that will provide the information you need. Such substitutions, however, should be approached with great caution.

Oil and grease levels reported from the standard analytical methods require some understanding. The materials reported as oil and grease are really materials extracted from the water with freon and remaining as residue after the freon is distilled off. This figure, then, is not specific to the "oil" you might see floating on the wastewater and can include some soluble oils as well. Since hexane was previously used as the extracting chemical, these materials are sometimes still called "hexane-extractable," but now more commonly "freon-extractable."

EPA now allows a different (and more costly) method that uses both freon extraction and infrared spectrophotometry. It is more specific to mineral oils, the major pollutant being regulated under oil and grease. If there is another component or soluble organic material making it impossible to meet your oil and grease requirements, this alternate analytical method should be considered.

FLOW MEASUREMENT

The techniques for measuring flow in a manufacturing facility are explained in the EPA Monitoring Manual.[4] Flow rates are quite often difficult to obtain, and accurate determinations may tax the ingenuity of the engineer. This is particularly true if sewers are intermingled and the plant sewer maps are not up-to-date. Accurate measurement of flow rates is essential for determining the sources of waste and applying effective in-plant controls.

ANALYSIS OF WASTE SURVEY RESULTS

At the completion of a waste survey, you should know the conditions at your plant outfall; this means that you should be aware of its variability. The NPDES permit will be based on a daily maximum value and a 30-day average value. The day-to-day variations of the plant's wastes may be sufficient to place it in violation of the 24-hour maximum, even though the 30-day average is within the allowance. This can only be ascertained by a statistical analysis of conditions at the outfall. The monitoring handbook[4] describes a simple statistical analysis technique for considering this variability as you estimate your outfall conditions.

The outfall conditions must also be known, so that the proper waste treatment system can be designed. Information on in-plant conditions will be helpful in minimizing the cost of this system. It is usually economical to perform in-plant surveys in those areas where major wasteloads seem to be occurring. If analysis shows that the suspected processes do account for the bulk of the wasteload at the outfall, then confidence can be placed in the overall accuracy of the waste survey.

The results of the waste survey will also be used in an economic evaluation of all the in-plant controls, to be discussed later.

FLOW REDUCTION

After the waste survey, you should be able to minimize your pollution control costs. One of the simplest and most effective methods for reducing the cost of a water pollution control system is to cut down the amount of wastewater to be treated. Reducing the wastewater flow enables use of smaller, less-expensive equipment and usually reduces the chemicals required for treatment.

If you hire a consultant to design a water pollution control system, flow reduction should be one of the first considerations. If you can reduce flows below 50,000 gallons per day, you may put your plant into a new category, less stringently regulated. If you are discharging to a municipal system, you may be able to move out of the "significant contributor" category. The beneficial effects that flow reduction can have on pollution control costs, for plants discharging both to streams and municipal systems, include:

- Minimizing the size of pollution control equipment;
- Maximizing the allowable level of concentration;
- Enabling use of less sophisticated equipment;
- Reducing chemical, pumping, mixing, and maintenance costs;
- Reducing water costs;
- Reducing the plant's share of municipal treatment system costs; and
- Possible reclassification out of the major contributory industry category for plants discharging to municipal systems.

There are several approaches to flow reduction that have been generally successful. Not all of them apply to every plant. Putting a good flow reduction program into practice requires the help of someone with a detailed knowledge of the manufacturing process. In this discussion, we will proceed from less- to more-expensive techniques. Many of these practices you may already have applied, and some may be impractical for your plant.

HOUSEKEEPING

Eliminating Excess Water Use

The first task in reducing wastewater flow does not require a large capital outlay, but a critical examination of the production area to eliminate unnecessary use of water. You can usually achieve significant reductions just by ensuring that water is used only when needed. This program will involve some operator education, but even more important will be small modifications to equipment to make it easier for the operator to save water. For example:

- Every hose in the plant should have a spring-loaded cutoff valve that shuts off water when released. Open hoses without nozzles can be a major source of water waste. One unattended half-inch hose, for example, can use 23,000 gal/day. Three of these hoses can use up the total allowance of 50,000 gal/day and change a user from a minor to a major contributor to a municipal system. (The implications of moving into this major category will be discussed in Chapter IV.)
- High-pressure spray nozzles should be used instead of direct water streams for washing. A survey in one poultry plant showed that total wastewater could be reduced 60 percent just by screwing in new spray nozzles.
- Leaky shut-off valves should be repaired.
- Wherever possible, dry cleanup should be used instead of routine flooding with water. Water washdown is certainly a necessity in most manufacturing facilities, but water is often used as a substitute for a broom. Under current water pollution control regulations, you will find a water stream a very expensive broom.
- Water flow to each piece of equipment should be cut to the minimum compatible with good operations, and steps should be taken to ensure that only this amount of water is used.

In any washing or rinsing operation, the natural tendency is to increase the flow of water to meet the most extreme requirements—and then to leave it at that level. Although it certainly isn't advisable to reduce water flow to the point where product quality is marginal or a full-time operator is needed just to maintain minimum flows, there is usually a point at which production can continue efficiently with reduced water usage.

Determining this point requires that your water valve be somewhat adjustable. You simply reduce water flow over several days until there is some indication of inadequate flow and then increase the flow 10-15 percent to arrive at the minimum level for

efficient operation. You then reset the valve at this point whenever you process the same type of work. Two points of caution: First, this method of setting valve position is good only if the line water pressure is constant. Changes in pressure will affect the flow at the same valve position; it may be necessary to install a water pressure regulator. Second, if gate valves are used, they probably will not provide the throttling accuracy required, and it may be necessary to install globe or throttling ball-valves.

Reducing Short Circuiting

After you have cut the flow to rinsing or washing equipment to the minimum, there will probably be room for further improvement because of "short circuiting." This effect is depicted for a rinse tank in Figure 2, where only a small portion of the water used actually passes over the product. There are methods for scientifically measuring the effective flow pattern in a tank by using tracers. However, you can detect short circuiting simply by adding a pulse of dye or other observable material into your inlet water stream and watching the patterns form. In many cases, you will see that a large portion of the water flow is missing the workpiece and is thus used unnecessarily. There are several ways that short circuiting can be minimized. Sometimes a relocation of the inlet and outlet nozzles is sufficient. In other cases, baffles are needed. Figure 2 shows various types of short circuiting and their corrections. In most cases, the method of correction becomes obvious once the flow patterns are observed.

Once these "housekeeping" tasks have been accomplished (and they can be done by your own staff), you are approaching the point where more detailed attention from operators is required. For the next round of water flow reductions you will need the results of at least a preliminary waste survey.

SEPARATING NONPROCESS WATER FROM PROCESS WATER

In many manufacturing plants, a large portion of the wastewater is actually cooling water that is not—or is only slightly—contaminated. This cooling water stream is usually very large. If the cooling water does not come into contact with any pollutants, EPA classifies it as "noncontact" water. It isn't part of your process wastewater load and you do not have to monitor and treat it with the same stringency as contact water.

In many plants, however, much of this cooling water finds its way into the final process waste stream, either through leaks that allow cooling water to run across areas where it picks up oil and dirt or through oil leaks that end up in cooling water sumps. Often, merely plugging oil leaks and/or cooling water leaks will enable a large portion of contaminated water to be reclassified as noncontact water.

If this separation and protection can be accomplished without great expense, real savings in water pollution control costs can result. Table 10 shows two cost estimates from four plants. These were large plants, and costs for treating the total water flow were high. Keeping oil out of the cooling water, which enabled separation of the waste stream into nonprocess and process water, substantially reduced each plant's investment. Control of oil leaks to prevent cross-contamination made reclassification of many sewers possible. This greatly reduced the water to be treated and enabled these plants to meet the guidelines on their NPDES permits.

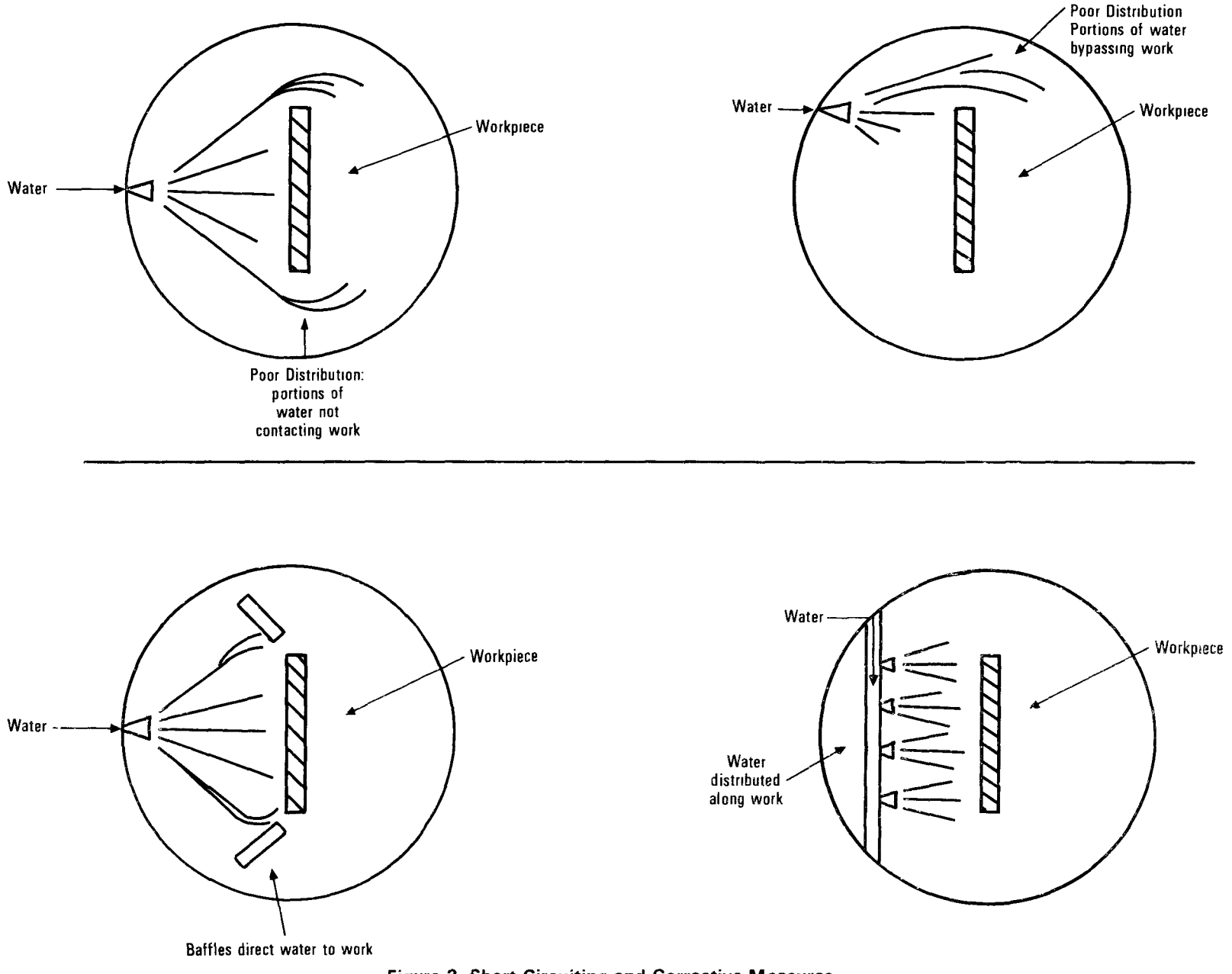

Figure 2. Short Circuiting and Corrective Measures

Table 10

Cost Comparisons for Treatment of Process and Nonprocess Water

Plant	1		2		3		4	
Case	A*	B†	A	B	A	B	A	B
Waste collection investment	$1,147,800	$454,000	$ 827,000	$320,000			$ 994,200	$298,100
Waste treatment investment	235,000	220,000	289,000	275,000			200,000	138,000
Total capital costs	$1,382,800	$674,000	$1,116,000	$595,000	In excess of $5,000,000	Approx. $700,000	$1,194,200	$436,100

*A = All flows designated as "process" water.
†B = Cleanup and designation as "nonprocess" for certain flows.

Causes of contamination of noncontact cooling water include:

- Oil leaks into cooling water sumps;
- Direct contact condensers;
- Cooling water leaks into process water;
- Excessive seal flushes; and
- Mixing of process waste with cooling water because of inadequate sewer lines.

If you do have a significant portion of once-through cooling water intermingling with your waste stream, it will be advantageous to find ways to prevent this cross-contamination.

THE COUNTER CURRENT CONCEPT

After the basic housekeeping and process and nonprocess waste-separation tasks have been surveyed, a fairly large amount of water may remain that is integral to your process and cannot, by any stretch of imagination, be changed to nonprocess water. The next step to further reduce your wastewater flow requires the understanding of a very important concept—counter current operation, especially applicable to plants with extensive rinsing operations.

The basic concept of counter current operation is to use the water from previous rinsings to contact the more-contaminated work article. The fresh water enters the process at the final rinse stage and then moves counter to the work flow to serve as rinse water in the preceding stages. Normally, the closer you can approach this concept in practice, the less water you will use.

Figure 3 illustrates three rinsing operations, each designed to remove the residual acid in the water on the surface of the workpiece to .0001 percent. In illustration 3a, the piece is dipped into one tank with continuously flowing water. In this case, we are essentially diluting the acid on the surface of the workpiece to the required level. Assuming complete mixing, the amount of water theoretically required to remove 10 lb acid/100 ft^2 surface area with a film drag of 1/16 lb/inch is about 1,200 gallons of water.

In illustration 3b, we have taken the first step towards counter current operation with the addition of a second tank. The workpiece is now moving in a direction opposite to the rinse water. The piece is rinsed with fresh makeup water prior to moving down the assembly line. However, the fresh water from this final rinse tank is directed to a second tank, where it meets the incoming, more-contaminated workpiece. Fresh makeup water is used to give a final rinse to the article before it moves out of the rinsing section, but the slightly contaminated water is reused to clean the article just coming into the rinsing section. In this case (making the assumption that the tanks are well-mixed and that there is a limit of .1 percent acid in the first-stage rinse), the water required is only 120 gallons, a 90-percent saving. If we increase the number of stages, as shown in illustration 3c, further water reduction can be achieved.

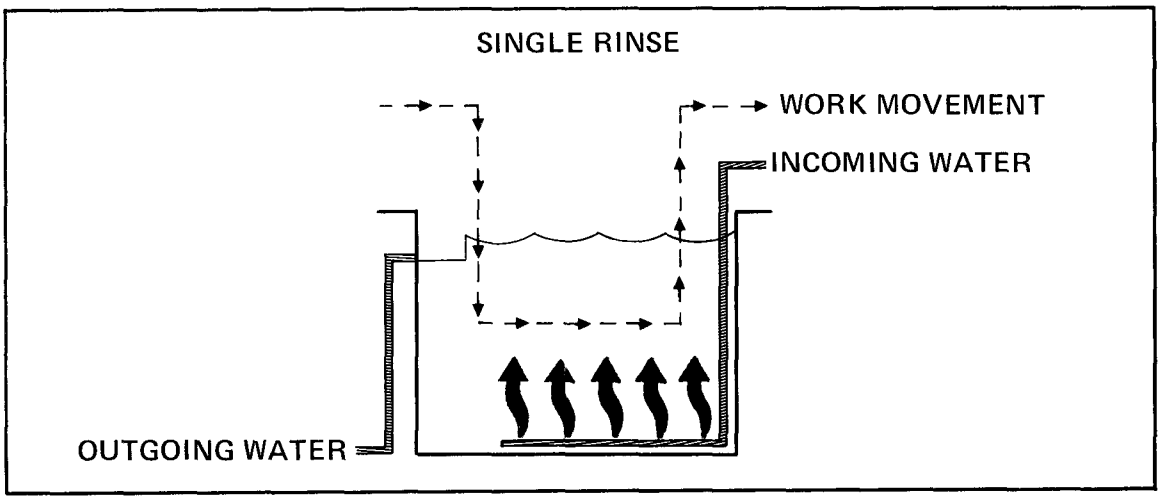

a

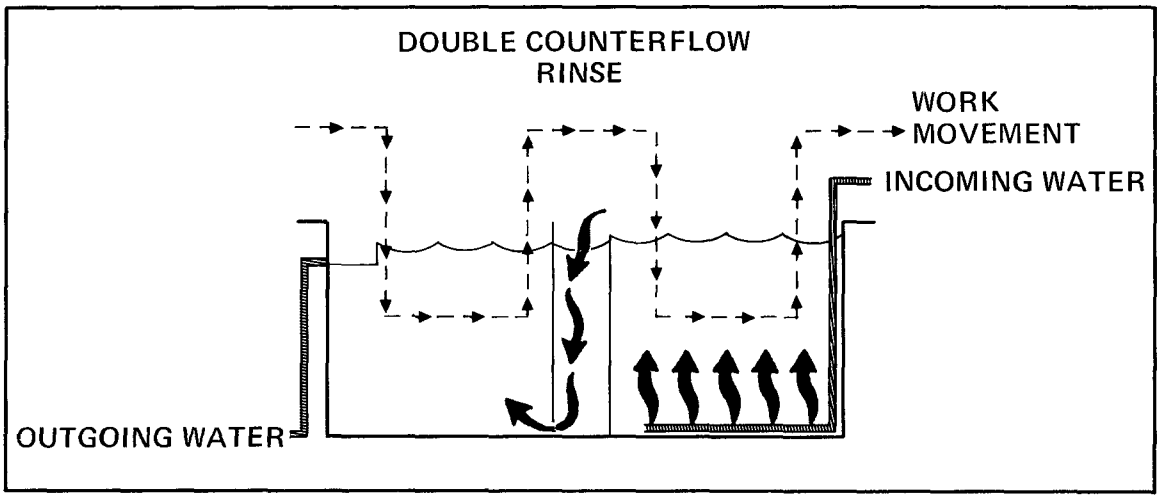

b

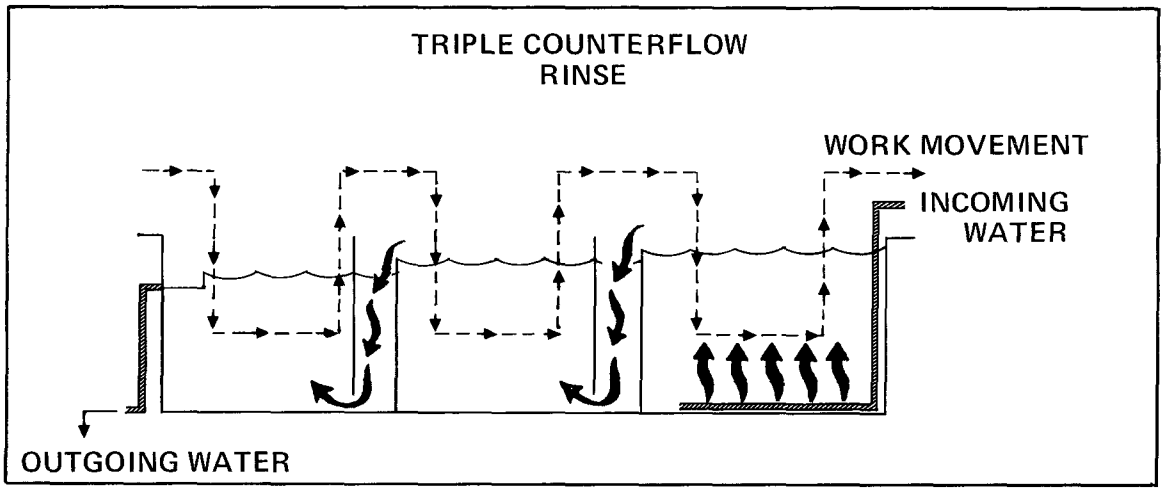

c

Figure 3. Counter Current Rinsing (Tanks)

Theoretically, the amount of water required is the amount of acid being removed by single-stage requirements divided by the highest tolerable concentration in the outgoing rinsewater. This theoretical reduction of water by a counter current multistage operation is shown in the curve graph in Figure 4. The actual flow reduction obtained is a function of the drag-out and the type of contact occurring in the tanks. Large amounts of short circuiting, for example, completely invalidate these projected reductions. If you have reasonably good contact, however, major reductions in water use are possible.

An important point, illustrated for the single case in Figure 4, is that the largest reductions are made by adding the first few stages. This is the familiar law of diminishing returns, which governs most in-plant reductions. The additional rinsing stages, of course, cost additional money. The actual number of stages you may wish to add depends on the specific layout and operating conditions at your plant. Table 11 presents a sample analysis for one plant that indicates three stages as the most economical

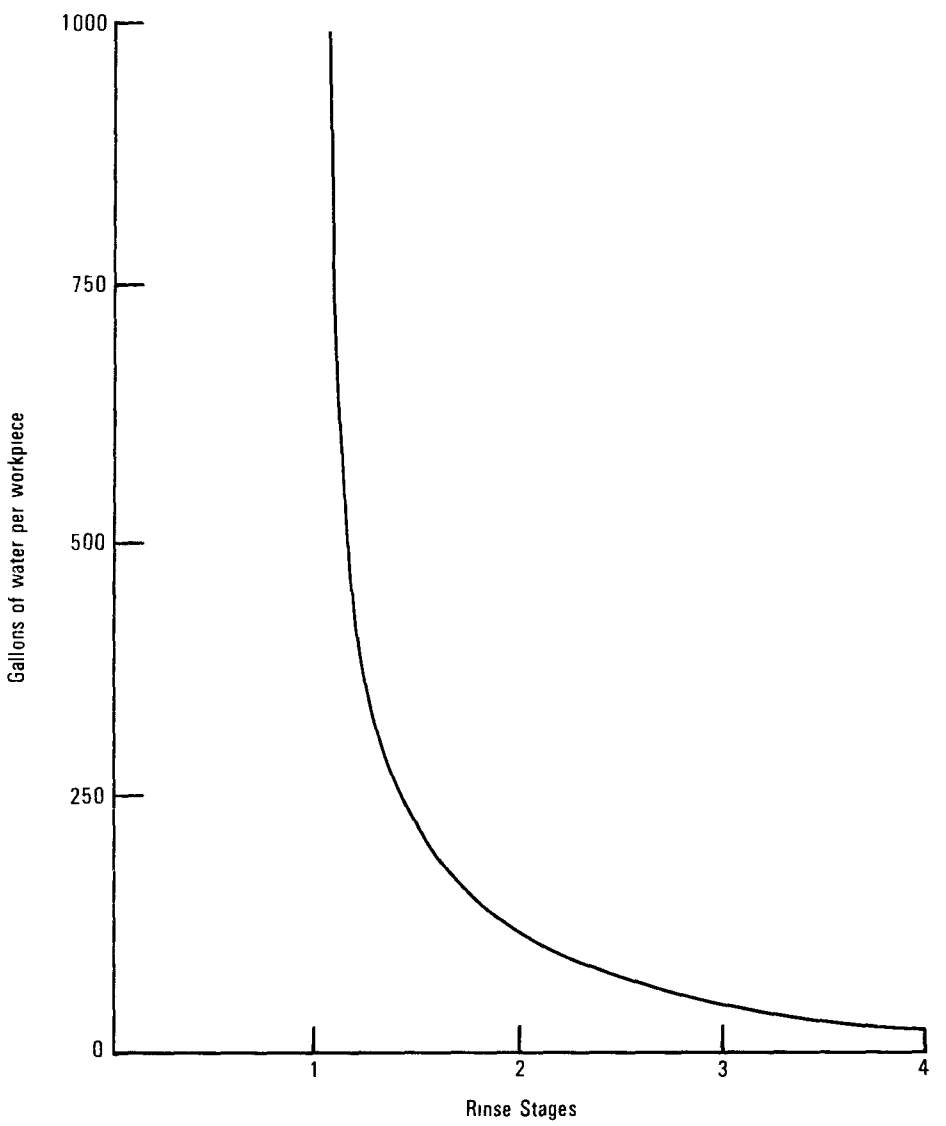

Figure 4. Effect of Added Rinse Stages on Water Use

Table 11

Economics of Staged Rinsing
for One Set of Conditions

Number of Stages	Water Flow (GPD)	Total Water Costs[a] ($/yr)	Incremental Capital	Payoff on Initial Investment
1	125,000	$35,000	—	—
2	12,000	$ 3,400	$25,000[b]	1 year
3	1,500	$ 420	$35,000	3 years
4	250	$ 70	$45,000	29 years

(a) Total water costs (purchase plus treatment) at $.85/1,000 gallons.
(b) Initial investment allows for modifications to hoisting system. Additional labor not included.

choice. With higher costs for water and waste treatment, more stages might be economical. With very low water costs, fewer stages would be economical. The space available for additional tanks is also important. Many other factors will affect the economics of this method; an evaluation must be done for each individual plant.

In addition to direct staging, many other configurations can be used for the counter current system. One of the more common is the dip and spray technique, shown in Figure 5. In this method, the work piece is dipped into a rinse tank to remove the bulk of the contaminants and then sprayed with clean water as it is removed. The water dripping from the piece into the tank provides the dilution necessary to control the amount of contaminants reaching the fresh water spray.

If you are only spray rinsing, it is possible to arrange your spraying sequence so as to approach a counter current process. The goal is a situation in which the partially contaminated water flows over the the workpiece to remove the bulk of the contamination before the piece is sprayed with fresh rinse water. Figure 6 shows two methods of spraying an article, one of which utilizes the counter current concept and one which does not. If your operator employs the "random flood" method of rinsing down with a hose (Figure 6-a), he is approaching the single-stage rinse system. If, on the other hand, the piece is held so the water draining down cascades over the lower portions of the workpiece (Figure 6-b), you are, in effect, approaching the counter current system.

The advisability of multistage counter current rinsing may finally depend upon the layout of your plant. If the flow from stage to stage can be effected by gravity, the counter current system is usually quite economic. If, on the other hand, you are forced to use pumps and level controls, then another method, such as spray rinsing, may be more feasible.

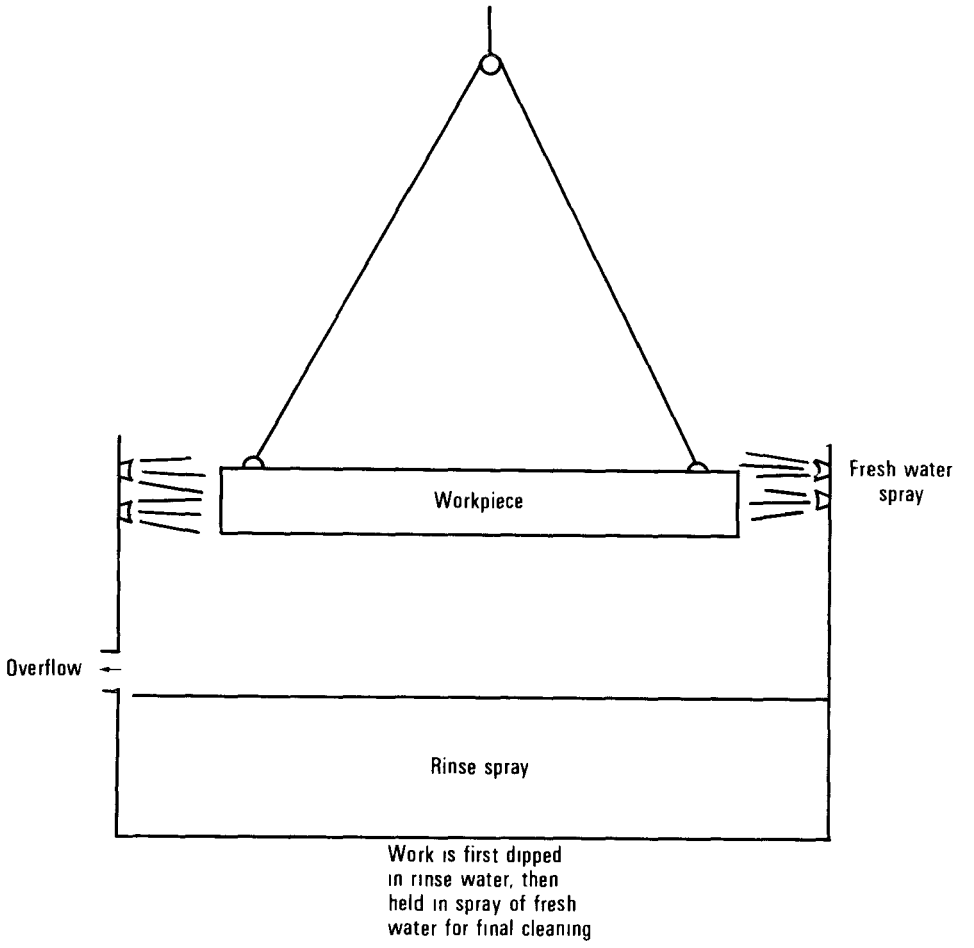

Figure 5. Counter Current Rinsing (Dip and Spray)

Another factor to consider before installing multistage rinse systems is the need for agitation. In cases where water is cascading in enormous quantities over a workpiece, the high flow usually provides enough agitation. As you apply more staging to reduce the amount of water, you will reach the point where the flow of the water itself is not sufficient to provide agitation. This necessitates either careful baffling of the tanks or additional mechanical agitation.

FLOW EQUALIZATION

Another valuable method for keeping down costs in a wastewater treatment system is flow equalization. Even after the maximum in-plant controls have been implemented, most plants have a wide variation in the flow of wastewater. Figure 7 shows how flows varied for one plant. Flow variations will be extremely high if your manufacturing process includes many batch-type operations. When one tank is dumped, a large flow will occur for a few minutes. Continuous processes have fewer variations; yet even here flow variation is a significant factor in the design of pollution control equipment.

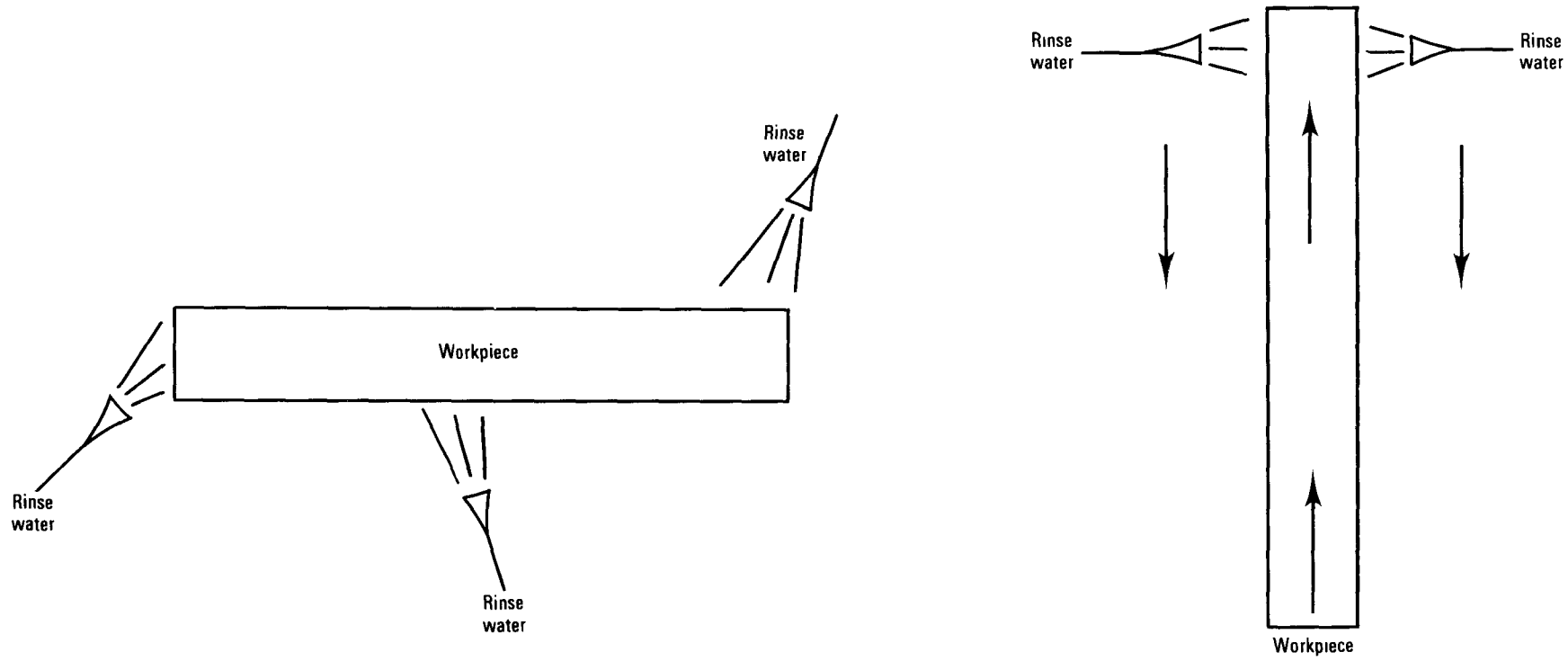

a
Random Flooding

b
Systematic Spraying

Figure 6. Two Spraying Methods

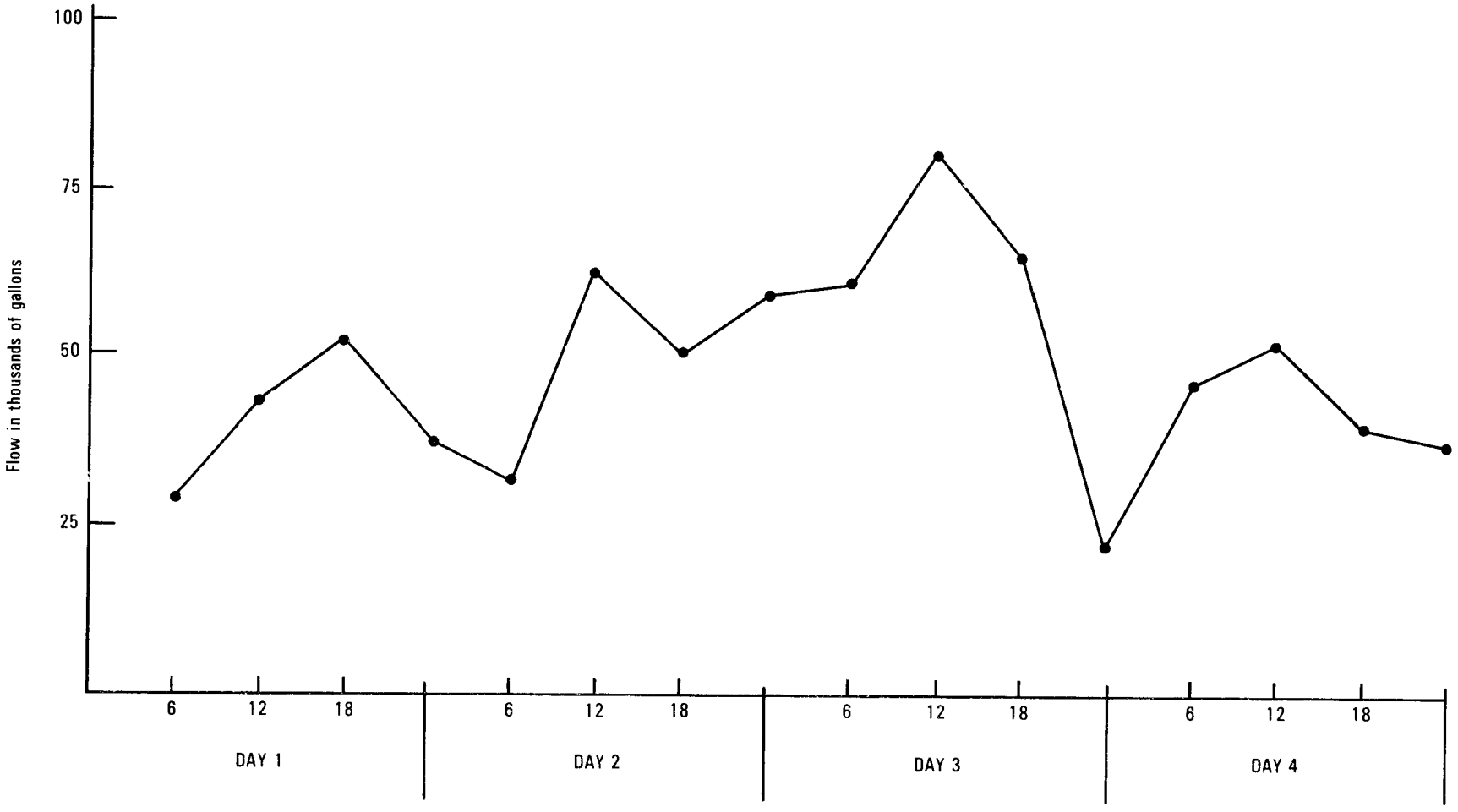

Figure 7. Flow Variations within a Plant

Pollution control equipment would be designed for the maximum rate. In the case of the plant in Figure 7, the equipment would be sized to handle the flow of 80,000 gal/day even though the average flow is only about 50,000 gal/day. The difference between designing for average flow and peak flow would normally be about 30 percent of the total system cost. The reductions that can be achieved in the size and costs of equipment by designing closer to average flow are what make flow equalization well worth considering.

The flow equalization will also bring about at least some equalization of wastewater characteristics and composition. Although continuous systems that supply complete equalization of wastewater characteristics (as opposed to flow) are not practical, the dampening effect upon discharges might make the difference between success and failure in operation of the treatment system.

Flow equalization is accomplished in several ways. A certain amount of equalization and dampening occurs in the sewer lines. The pollution control equipment, having a given surge capacity, will also dampen some of these variations.

Both suspended-solids removal equipment and oil-water separators and filters are designed on the basis of flow rates plus pollutant concentrations. A surge of flow can cause a clarifier to lose its sludge blanket, resulting in a catastrophic amount of suspended solids in the overflow. Similarly, a surge can overload the oil-water separators and cause oil spills. Figure 8 shows one type of flow equalization system. Here the tank has a level that is allowed to rise during the day when the flow rates are normally higher. Meanwhile, the pump maintains a fixed flow to the waste treatment system. The flow equalization in this system is very good. With wastewater pollutants, however, large upsets may still occur if the concentration entering the flow equalization system is very high.

Underestimating the variability of the waste is the single most important reason that pollution control systems fail to meet expectations. The designer must know the peak values and the rates of change of the flows to which his pollution control equipment will be subject. Flow equalization will minimize the risk of overloading the system.

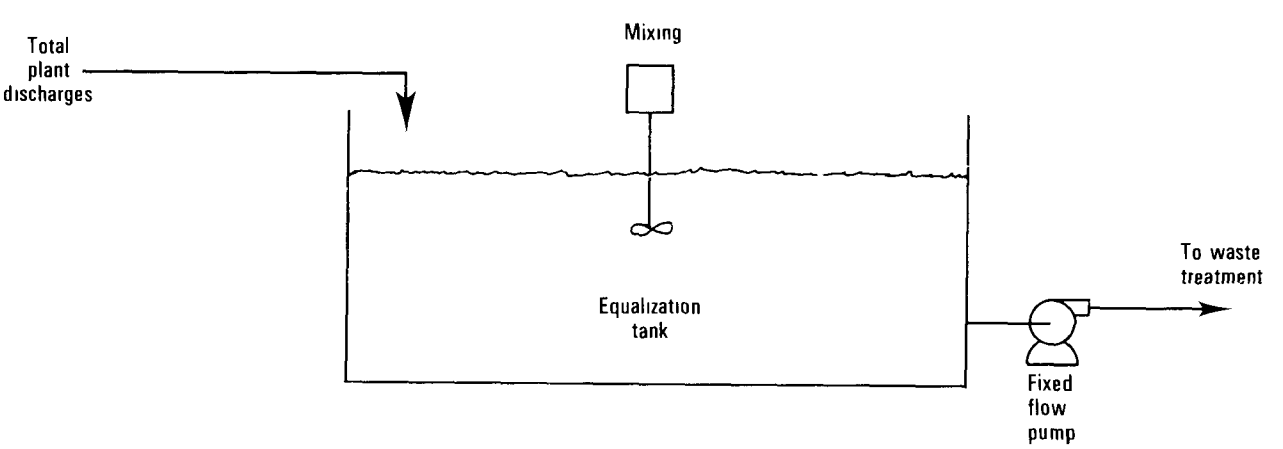

Figure 8. Flow Equalization

WATER REUSE

In discussing counter current operations, we illustrated the benefits of reusing the fresh water from final cleaning of a workpiece to clean dirtier pieces. Instead of looking at each rinsing process by itself, the entire manufacturing sequence should be examined to decide if water from one application is suitable for use in other areas requiring less purity. This is the basic concept of water reuse.

To assess the amount of water that can be practicably reused in your plant, you must know the water quality requirements for each water-use point. This information is not usually known precisely, but engineers or operators familiar with a manufacturing process can often present fairly good estimates. Careful experimentation may be required. An inventory of water quality requirements is then matched against a similar listing or diagram of the wastewater being generated.

In practice, rearrangement of water use in a plant is not so simple as it sounds. First, the water to be reused has to match the needs of the particular area to which it is available. In many plants, this will require the addition of surge capacity equipment, since the production units may not operate in matched sequence. Second, there can be some unpleasant product quality changes when contaminated water is used on a product. A basic rule in incorporating water reuse practices into a plant is to slowly test each application over a period of time. If changes are made simultaneously and a problem arises, it is difficult to sort out the cause.

RECYCLING

In the context of our discussion, to recycle means to rechannel water for reuse in a process in which it has already been used. If for a specific plant operation you take the water that has been used and return it to the inlet, as shown in Figure 9-b, you have closed the loop, or placed the system on zero water-discharge. If this is done as illustrated, and if new impurities are continually being added to the loop, the recirculating water in the system will very quickly reach a high pollutant value. At this point, it will no longer be able to remove further contaminants from the workpiece, since the concentration in the circulating water will be as high as that on the piece being processed. Product quality will quickly deteriorate.

To transfer any pollutant to water, there must be a concentration difference between the source of the material and the water itself, maintained by removing pollutants from the circulating system. One way is to drain off a portion of the circulating stream and add an equal portion of fresh makeup water (Figure 9-c). The system shown here works well. Material being transported out of the system equals that brought in by the workpieces, and thus a state of equilibrium exists. The flow-out is low, but of high concentration. A second method is to set up a side stream and treat it to remove the contaminant.

The impurity to be removed may be either soluble or insoluble. Methods for keeping both types of contaminants at acceptable levels in recycle streams are discussed in the following paragraphs.

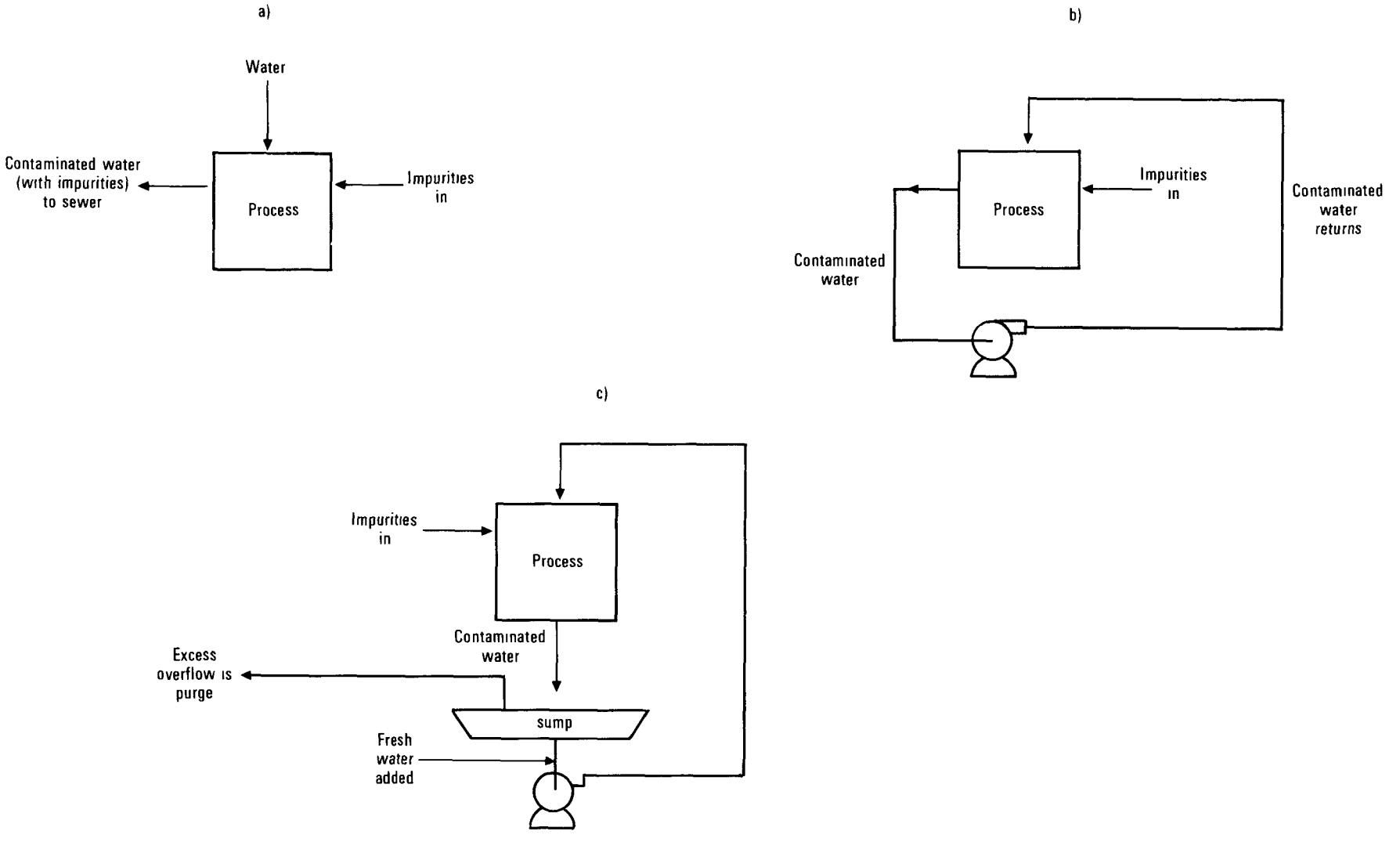

Figure 9. Examples of Recycle Systems

RECYCLE LOOPS WITH SOLUBLE CONTAMINANTS

To recycle water in your plant for a specific process, you must know the level of impurities that can be tolerated within the recycle stream. The amount of impurities tolerable in relation to impurities already present in the incoming water determines the amount of recycle.

As an example, let us suppose we are removing a treatment solution from a product and that the work brings 30 pounds of some type of salt into the process per hour. If we were to completely close the loop, this salt would quickly build until the circulating water would not remove any further salt from the work. If we begin to bleed a portion of the recirculating stream, creating a "blow-down," a new equilibrium will be established in which the salt removed by the blow-down is equal to the salt being added by the pieces.

In closing the loop, you must determine how high you can allow the level of salt to go in the circulating stream while still maintaining product quality; that is, the concentration that will allow the process to continue satisfactorily.

The concept of balancing water reuse against product quality can be applied to any system for which recycle is being considered. Basically, this involves starting with a high purge rate, followed by a slow reduction of the flow of fresh water into the system. The new flow rate is allowed to reach equilibrium, and its effect on the product is then evaluated over a period of time. Each step may take days and each change should be small; you should be sure of the results of one step before proceeding to the next. Table 12 shows a result that might typically be obtained. In the case shown, it was found that the first five reductions still provided ample "operating room." At the seventh step change, however, operations began to be shaky. In this particular case, it would be best to stabilize operations at level five, a level that showed ample water savings over level one at a low cost.

RECYCLE LOOPS WITH INSOLUBLE CONTAMINANTS

In many cases, the critical contaminant in a recycle stream is insoluble.

An example occurs in the white sidewall grinding operation on rubber tires. To bring out the white sidewall, each tire is ground with an abrasive material. Water washing after this abrasive grinding operation picks up particles of rubber and of the abrasive itself. One type of water flow for this washing is shown in Figure 10-a, in which the water applied to the tire empties directly into the waste treatment system, resulting in a high level of suspended solids in the sewer.

Since the material in this case is an insoluble solid, it can be removed easily and the water quality requirements at the inlet of the process can be satisfied. In the system shown in Figure 10-b, we have removed the entire stream as a plant waste source and have in fact closed the loop. In this system, the flow from the grinding operation goes to a settling device, where some oils float to the top and other solid materials

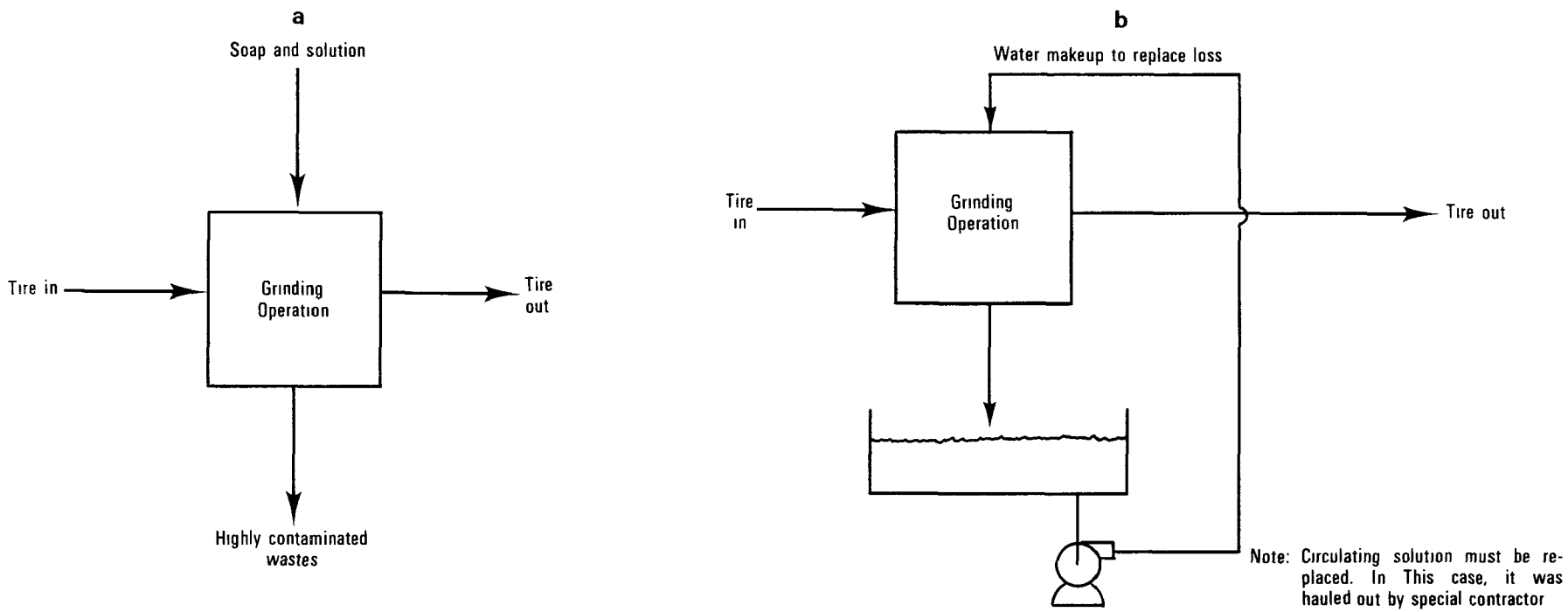

Figure 10. White Sidewall Grinding

Table 12

Summary of Recycle Study

Step	Flow Over Work GPM	Overflow to Sewer GPM	Fresh Water Required GPM	Product Quality	System Mechanical Operation
1	500	500 (once through)	500	Good	Good
2	500	250	250	Good	Good
3	500	200	200	Good	Good
4	500	150	150	Good	Good
5	500	100	100	Good	Good
6	500	75	75	Good	Flow Nozzles Clogging
Change nozzles to larger size and proceed					
7	500	75	75	Good	Good
8	500	50	50	Slippage	Good
Operate at 75-100 GPM.					

sink to the bottom. The pump takes the contaminated but still-adequate water back to the inlet of the process, where it is reused. This is a complete recycle system. The purge and makeup water will only equal the small amount of the water carried out by the workpiece.

In examining your own manufacturing processes for opportunities to close recycle loops, look first for areas where the mechanical or cooling properties of water are being used rather than the solvent properties. For example, almost any process where water is used to transport solids will be a prime target for recycle. Look also for processes in which water quality requirements are not extremely high. In the case of white sidewall grinding, water was being used to mechanically remove the grinding debris and to provide cooling. With a very simple settling system, the water could be reconditioned to perform the function again.

SUMMARY

This chapter has dealt with the more important principles involved in reducing wastewater flows by in-plant controls. Although in-plant controls are an extremely important part of any pollution control program, it is difficult to specify the most economic measures without a detailed knowledge of a plant's operations and layout; specific decisions can only be based on an analysis at each individual facility.

CHAPTER IV

RELATIONSHIP WITH THE MUNICIPAL SYSTEM

Plants connected to a municipal treatment system face a somewhat different set of rules than plants discharging directly to a stream. This section outlines some points applicable especially to plants discharging into municipal or public systems.

Managers of plants discharging into municipal systems must bear in mind two important considerations of PL 92-500: (1) the cost recovery provisions for upgrading of municipal systems; and (2) pretreatment requirements. Both of these points, unless fully considered, can adversely affect the economics of pollution control.

Under the old grant system that existed before PL 92-500, municipalities received 35-55 percent of the cost of constructing municipal treatment systems from the federal government. Under the new law, they receive 75 percent. In the past, it was common for municipalities to recover only their share of the grant from the participating industries. Under PL 92-500, however, municipalities are required by the federal government to recover the federal share of the grant also. This means that industry's share of the municipal system will increase. Further, the cost of the municipal system will be higher than in the past, since the municipality is required to meet higher discharge standards.

The method that a municipality can use to recover the industrial costs can vary, but is subject to some EPA guidelines. It can be based upon total flow or upon a more elaborate formula relating to the actual amounts of materials discharged. In addition, for new construction the industry and the municipality must sign a contract, which, in effect, commits the industry to use a certain portion of the municipal treatment capacity.

If you are now connected to a municipal system and are a "major contributing industry" (defined below), it is important that you become aware of your municipality's progress in upgrading its treatment system, since this will guide you in your own plans. For example, if you are now sending large amounts of essentially uncontaminated cooling water to your municipal system and find that the municipality is devising a cost-recovery system proportioned largely by flow, you should consider some process changes in your plant.

REGULATORY REQUIREMENTS FOR PRETREATMENT

The pretreatment requirements for each industry subcategory dictate what must be done before discharge into the municipal system. Under the general requirements for

meeting national EPA guidelines, pH must be above 5 and all of the other requirements met. Since no specific pretreatment regulations have been issued for metal products industries at the time of this writing, the plant must be prepared only to satisfy the municipality that nothing is being discharged that would harm the treatment system. This means good spill control, perhaps with some grit and free-oil removal facilities; these systems are discussed in Chapter V, Wastewater Treatment.

Keep in mind that regardless of what EPA may specify, the municipality can invoke more stringent regulations. Although this generally is not a problem, a good spill-control program is advisable for staying on the right side of municipal officials.

The general EPA pretreatment regulations will consist of, first, general guidance for municipalities receiving industrial wastes, and second, the specific pretreatment requirements for each industrial category.

Under the general regulations there is one important definition: what constitutes a "major contributing industry." According to the regulations, a major contributing industry is an industrial user of a publicly owned treatment works that:

- Contributes a flow of 50,000 gallons or more per average work day;
- Contributes a flow greater than 5 percent of the flow carried by the municipal system receiving the waste;
- Has in its waste a toxic pollutant; and/or
- Is found by the permit issuance authority to have significant impact, either by itself or in combination with other contributing industries, on the treatment works.

Many of the regulations apply only to major contributing industries; that is, if you can meet the conditions that keep you from being a major contributing industry, your regulatory requirements will be easier to meet. If you are working around the clock, the 50,000 gallons per day translates to about 34 gallons per minute. If your average waste flow is less than 34 gallons a minute, you will not be a major contributor if the other conditions are met. If you are on an 8-hour shift per day, you can discharge up to 104 gallons per minute, on the average, without being considered a major contributor. If you are close to this quantity now and have a possibility of reducing your flows by in-plant changes, the option may be a wise one.

You may also have a stake in learning what pollutants are actually defined as toxic by PL 92-500 and what amounts are allowed. It will be to your advantage to eliminate a toxic pollutant from your plant's wastes by pretreatment or by switching to a different material, if this will gain the plant exclusion from the "major contributing industry" category.

The general guidance for pretreatment standards basically states that there are four "compatible" pollutants: biochemical oxygen demand (BOD), suspended solids, pH in values or amounts that exceed the limits, and fecal coliform bacteria. Additional

pollutants may be defined as compatible in the NPDES permit if the publicly owned treatment works was designed to treat them and does, in fact, remove them to a substantial degree. This is of interest to the metal products industry because the regulations give examples of such additional pollutants as chemical oxygen demand (COD) and fats, oils, or grease of animal or vegetable origin.

The latitude in designating compatible pollutants means that your municipality can, if you have the right relationship, help you by agreeing to remove portions of the pollutants in your waste.

In the general regulations, certain wastes are prohibited from publicly owned treatment works. These are:

- Wastes that create a fire or explosion hazard;
- Wastes that cause structural corrosion damage to treatment works, such as acids (the regulations currently state that any waste with a pH lower than 5 cannot be discharged unless the works is designed to take such wastes);
- Solid or viscous wastes in amounts that would obstruct flow in the sewers; and
- Wastes entering the treatment facility at a flow rate and a pollutant discharge rate that is excessive over relatively short periods, so that the treatment process is upset.

For the compatible pollutants (in the metal products industry, pH and suspended solids), pretreatment is not required by these regulations. However, the state or the municipality can add regulations to require pretreatment if they desire. Bear in mind also that even though you may not be required to treat the compatible pollutants yourself, the municipality can (and probably will) set up its cost-recovery system so that you are charged for treatment by the municipal system.

For "incompatible" pollutants, the guidelines state that the pretreatment standard should require pretreatment to a level in which the final effluent, after passing through the municipal system, will be equivalent to that obtained if the best practicable control technology currently available were applied. The only exception is when the publicly owned treatment works is committed in its NPDES permit to remove a specified percentage of a pollutant; in this case, the industrial discharger may have his allowance adjusted upward to account for this municipal removal.

Therefore, for those plants discharging to a municipal system, the effluent guidelines pretreatment requirements are quite important, especially if you are a major contributing industry. If you are not, none of these regulations apply and your requirements are strictly between you and the city.

INDUSTRIAL COST RECOVERY

Current EPA guidelines require that any municipality receiving a federal grant for upgrading its treatment system or for building a new system must recover from industry

the costs due to industrial usage of the system. These funds are then returned to the federal government. Every manufacturer discharging to a municipal system should be familiar with these regulations.* Before receiving any amount above 50 percent of its grant, each municipality must furnish evidence that it has made progress in developing a satisfactory industrial cost recovery system (ICR).

An important guideline for municipalities is that payment must be in proportion to those industrial wastewater characteristics that influence the cost of construction. Characteristics that may be included as affecting the cost are the strength, volume, and flow rate of the waste stream.

EPA says the following points must be considered in the ICR system:

- If the maximum flow of a plant contributed to the cost of the construction works, it shall be the basis for that user's payment. No credit is given to the industrial user for the period when his plant is not operating and not discharging water (which is one reason that flow equalization and reduction is an important in-plant control).
- If an industrial user discharges cooling water into a municipal system, even though it is uncontaminated, it is to be considered process waste and must be included in the ICR computation. (If discharged to a stream, uncontaminated cooling water is not called a process waste and can usually be discharged without treatment.)
- The cost of unreserved excess capacity in the municipal treatment system for expanded future use need not be recovered from existing users.
- If you reserve some of the treatment system's excess capacity for your plant's future use, however, the cost of your reserved capacity must be reckoned.

ICR is not required for infiltration/inflow correction or correction of combined storm overflow and collection or treatment of storm waters. Additionally ICR does not apply to grants for projects which will not benefit industrial users.

"Major" contributing industries must be monitored on a regular basis. "Minor" industries may be monitored on a random basis or, if monitoring is not feasible, wastewater characteristics may be determined by using historical records and data from similar industries.

There is, therefore, some leeway in how you can be included in the municipal cost-recovery system. If a manufacturer has the option of either discharging to a stream or to a municipal system, it is important to examine the economics of both options in light of his plant's specific situation. In making this assessment, the manufacturer must be aware of his municipality's future plans.

*A copy of *Industrial Cost Recovery Systems* can be obtained from the EPA Municipal Wastewater Treatment Works Construction Grant Program, Washington, D.C. 20460.

THE ECONOMICS OF PRETREATMENT

Pretreatment in a plant can be roughly divided into (1) pretreatment required to meet the regulatory requirements, and (2) pretreatment installed because it pays for itself in reduced municipal charges. The treatment necessary to meet municipal regulatory requirements has been discussed above. In this section we are concerned with installing additional pretreatment systems as an investment yielding a favorable return in reduced municipal charges.

The economics of installing a pretreatment system that exceeds the regulatory requirements solely to reduce user or ICR charges are dependent on (1) the fee schedule for the municipal system and (2) the waste characteristics of the plant. Using the surcharge rates for one major city, 2.4 cents per pound of suspended solids above those in the first 10,000 gallons per day, a plant discharging 100,000 gallons per day of wastewater with 1,000 ppm suspended solids could save about $5,000 per year in surcharges by reducing suspended solids to 100 ppm. If conventional treatment of the entire stream with clarifiers were required to reach the 100 ppm level, it would not be a particularly attractive investment, because the payback on the investment would probably exceed 10 years. On the other hand, if this reduction could be made by simple in-plant modification—such as recycling one internal stream—an attractive saving might be possible.

Similarly, if the plant were discharging 2,000 ppm of suspended solids, then pretreatment to remove some of this load might be economical. Each plant must make this calculation, based upon the formula used by the local municipality and the estimated cost. Generally speaking, however, for plants of the size of most metal products manufacturers, the most attractive route to reducing payments to the municipality is the use of improved in-plant controls (Chapter III) rather than the installation of hardware. This statement is based on the typical situation in which the manufacturer has a relatively low flow. Obviously, there will be exceptions. Table 13, which follows, is a rough analysis for a specific plant, using the surcharge costs in the previous example. For the case illustrated, the conclusion is clear: It is cheaper to pay the surcharge than to install pretreatment equipment.

Flow reductions save in both the water bill and the sewer charges as well as possibly bringing the plant below the "major contributing industry" level.

Table 13

Preliminary Analysis of Pretreatment Economics

Example Surcharges for a Municipality

- Suspended solids surcharge of 2.4 cents/lb for all solids beyond that which would be obtained in the first 10,000 gal/day
- Sanitary allowance of 4 mills/day per employee for sanitary sewage discharged
- 2.1 cents/1,000 gal of flow

Plant Conditions

190,000 gal/day @ 716 ppm of suspended solids (SS)
25 employees
330 days operation
Yearly operating costs associated with solids removal
(labor, maintenance) = $3,000 (estimated)

Objectives — To study installation of equipment to:

Reduce suspended solids to 100 ppm by clarification and to spread solids on plant property. Determine total capital costs and payback period which can be obtained by reduced municipal charges.

A. Present Surcharges for Plant

Total surcharge = flow surcharge plus suspended solids surcharge minus sanitary allowance

Flow Surcharge

$$\frac{190{,}000 - 10{,}000 \text{ gal}}{\text{day}} \times \frac{\$.021}{1{,}000 \text{ gal}} \times \frac{330 \text{ days}}{\text{year}} = \$1{,}247$$

Suspended Solids Surcharge:

$$\text{Total lb of SS} = \frac{190{,}000 \text{ gal}}{\text{day}} \times \frac{330 \text{ days}}{\text{year}} \times 716 \text{ ppm} \times \frac{8.34 \text{ lb of water}}{\text{gal of water}} = 374{,}410 \text{ lb}$$

Pounds of suspended solids excluded from surcharge:

$$\frac{10{,}000 \text{ gal}}{\text{day}} \times \frac{330 \text{ day}}{\text{year}} \times 716 \text{ ppm} \times \frac{8.34 \text{ lb water}}{\text{gal water}} = 19{,}706 \text{ lb}$$

Pounds of suspended solids which will be chargeable:

$$374{,}410 - 19{,}706 = 354{,}704 \text{ lb}$$

Suspended Solids Surcharge = total lb of 354,704 x $\frac{\$.024}{\text{lb}}$ = 8,513

<u>Surcharge Allowance</u>: = $\frac{\$.001}{\text{employee}}$ x (25 employees) x (330 days) = $8

Total Surcharge = $1,247 + $8,513 - $8 = $9,752

B. <u>Adding Hardware for Reducing the Suspended Solids to 100 ppm</u>:

Savings = Suspended Solids Surcharge reduction minus operating costs

SS surcharge reduction = ($8,512) $\left(\frac{716 - 100}{716}\right)$ = $7,323

Operating cost estimate = 3,000

Total Savings = $4,323

Cost of Equipment: $110,000 (Figure 45)

Payback = $\left(\frac{110{,}000}{4{,}323}\right)$ = 25 years

<u>Conclusion</u>: Not Economic

CHAPTER V

WASTEWATER TREATMENT

Once in-plant controls have been applied to their practical limit, the manufacturer must look to wastewater treatment techniques for the final removal of pollutants to a level that will satisfy the NPDES permit or the municipal system requirements.

Wastewater will contain both dissolved and suspended substances. The goal of treatment is to reduce these materials to levels that will not pollute the receiving stream.

Figure 11 shows the components of wastewater for most metal machining, fabricating, and coating facilities. The water will include some coarse solid materials picked up from the scaling or cleaning operations, along with free and perhaps dissolved oil, some dissolved metals and other solids, and colloidal material. Basically, the treatment system will remove insoluble solids by gravity settling, free oil by floating and skimming, and dissolved metals by chemical reactions that convert them to an insoluble form so they, too, can be removed by gravity settling. The mechanical aspects of this treatment are not particularly complex. As will be seen, however, certain chemical and physical phenomena occur that make it necessary to perform interim testing to ensure that low pollutant levels are being reached.

By visually examining a sample of a plant's wastewater, we can see that certain pollutants can be readily removed; these are the materials that soon either settle to the bottom or float to the top. These highly visible materials are often responsible for the gross unsightliness that the public associates with pollution.

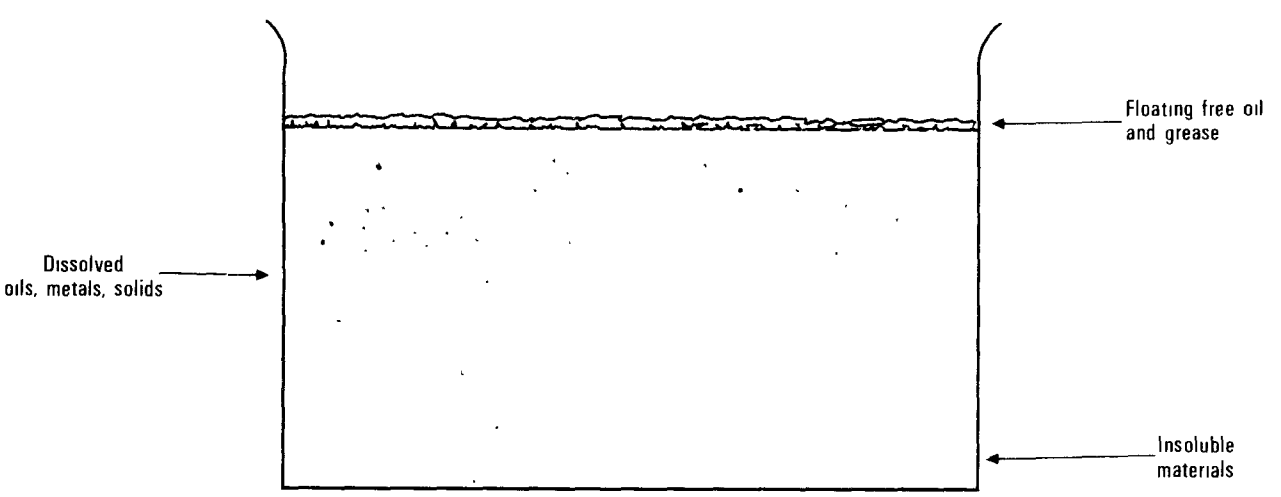

Figure 11. Wastewater Components

The solids that rapidly settle to the bottom of a beaker of raw wastewater are known as "settleable solids."* These are the larger, coarser suspended solids. In water pollution control technology, there is a specific measurement for their determination. The wastewater is allowed to settle for one hour in a special apparatus. The solids that settle during that time are going to be relatively easy to remove from your wastewater; in fact, some of them will settle out in the sewer lines at periods of low flow.

After this quiet settling time, however, there will still be many solids present in the sample. These are finely divided particles that remain suspended indefinitely unless some treatment is applied to make them "settleable."

An upper layer will also normally form on wastewater left quietly in a beaker for a short time. This will be the free oil and grease that readily agglomerates to large droplets and floats to the surface. If you give the wastewater a chance to reach quiescent conditions for a given period, this free oil will rise and can be easily skimmed off.

Assuming that the wastewater has now been passed through the proper equipment (which will be discussed shortly) to remove the easily settleable solids and the free-floating oil, the treated water will still have a very cloudy, turbid appearance and may still contain significant amounts of oil and grease. There also may be significant quantities of dissolved heavy metals, some of which may also be regulated on your NPDES permit. Removal of these remaining pollutants requires chemical and/or mechanical treatment to first precipitate the soluble pollutants and, second, to create conditions where the suspended solids can join together into larger particles that can be removed by gravity settling. The suspended or emulsified oils must also be treated so that smaller particles join together and become "freed" for removal by mechanical separation.

Figure 12 illustrates the normal sequence of treatment for wastewater containing the pollutants just described. Basically, the philosophy is to first remove those materials that can be easily separated; this avoids later interference with the more critical chemical and physical techniques used in final treatment. Thus, the wastewater is first passed through a crude settling and skimming operation, followed by a precipitation and clarification process, and finally, if required, through an emulsion-breaking, coalescing operation where the fine oil particles are freed from the waste stream. The sludge removed from the water might then be sent to a further "thickening" operation where the percentage of solids in the sludge is increased for easier transport to disposal.

For discussion purposes, the treatment sequence has been divided into three general operations: primary separation, the crude separation of easily settled solids and bulk oil; wastewater conditioning, or chemically treating the remaining pollutants for removal; and actual removal of these pollutants by sedimentation or filtration.

*Almost all the terminology used in wastewater treatment is derived from the sanitary engineering profession. Since this terminology does not always coincide with common usage, we will define each key term as it appears.

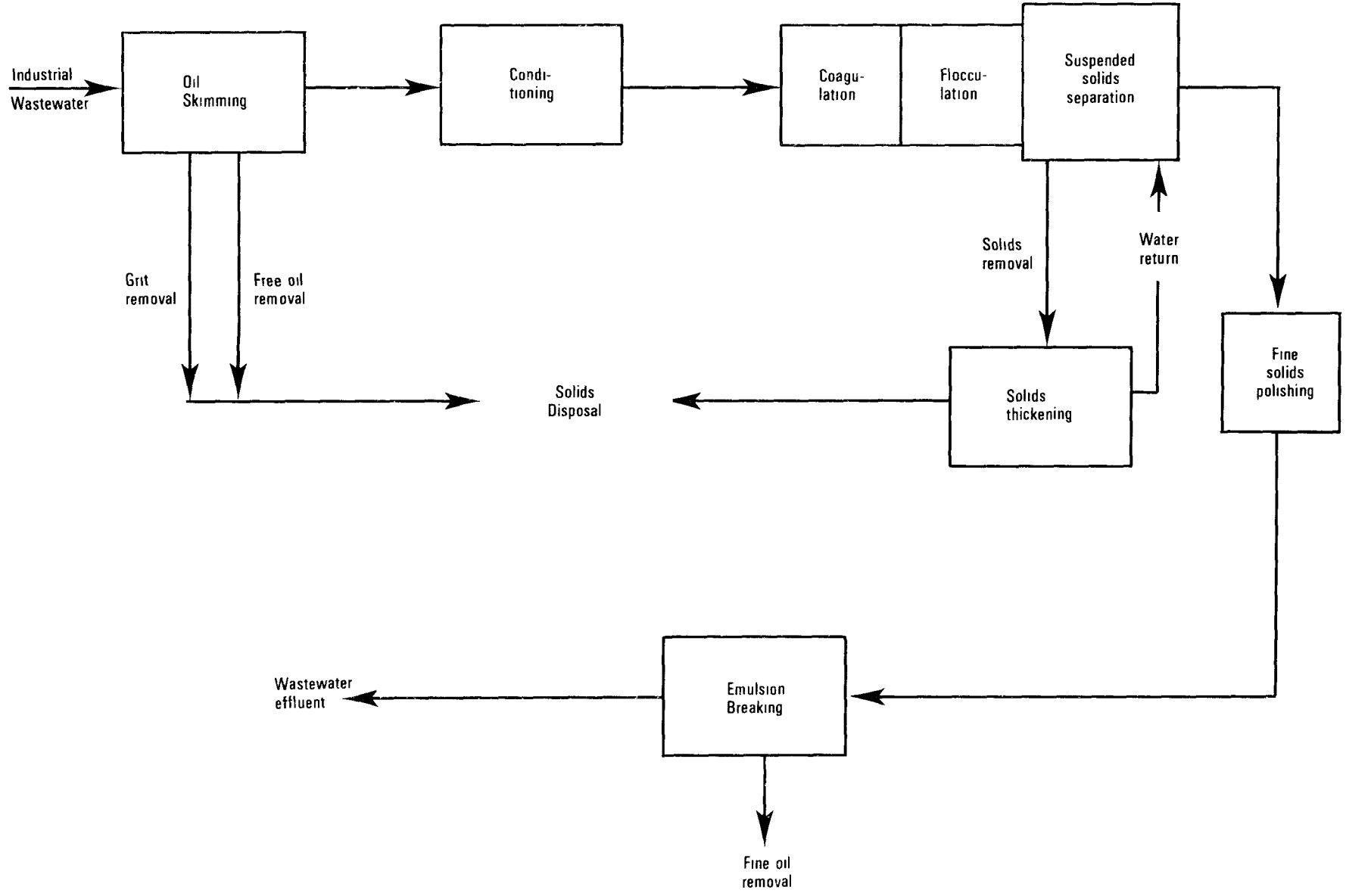

Figure 12. Typical Wastewater Treatment System

Waste treatment is simply the accomplishment of these three tasks. In this chapter, we will discuss the basic means by which pollutants are removed; describe the equipment; present data to help estimate costs; and provide guidance to the manager for avoiding many pitfalls that can result in extensive violations or added costs.

PRIMARY CLEANUP (GRIT AND FREE-OIL REMOVAL)

The first step in the treatment of industrial wastewater is the removal of grit and free oil, which are suspended in the waste stream by turbulent flow. Once the flow rate is lowered to a nonturbulent level, the grit (heavier than water) settles to the bottom of the container and the free oil (lighter than water) floats to the top.

GRIT REMOVAL

Components of the grit—dirt, metal shavings, and other heavy solid materials—are generally classified as settleable solids and are removed from the waste stream by installing grit chambers. A grit chamber is normally a rectangular vessel or tank, sized to reduce the horizontal velocity of the waste stream to approximately 1 ft/second and having a detention time sufficient to remove particles with a settling velocity greater than 2.5 ft/minute. Given the detention time (settling velocity), horizontal velocity, and the waste stream flow rate, the overall dimensions of the chamber can be determined.

During nonturbulent flow conditions, the solids fall to the bottom of the grit chamber into an accumulation space. The settled grit is removed periodically from the grit chamber by conveyors (such as screw conveyors) or collection baskets, which are raised out of the chamber with an overhead lift or monorail system. Collection baskets are preferred when the grit is abrasive. These grit chambers can be combined into one unit with the free oil-water separators, as in Figure 13. Grit chambers can usually eliminate all particles with sizes greater than 100 mesh.

OIL REMOVAL

Oil-water separators and skimming equipment are used to separate and remove free oil from a waste stream prior to further treatment. In some instances, flotation equipment is also used to induce oil droplets to the water's surface for removal. These classic oil removal techniques usually result in residual concentrations of approximately 50 ppm, depending on the nature of the oil. Under certain conditions, lower free-oil values can be obtained.

Skimming Devices

Free oil and grease floating on or near the surface can be effectively removed by skimming devices, once the flow rate is reduced in a basin. Some of these are units that remove free oil by indiscriminately removing the entire surface layer of the waste stream. Other skimming devices are self-contained units, designed to rest on the water surface and consisting basically of a floating platform. An adjustable weir allows the different skimming depths. The weir overflow, containing the oil and grease, is

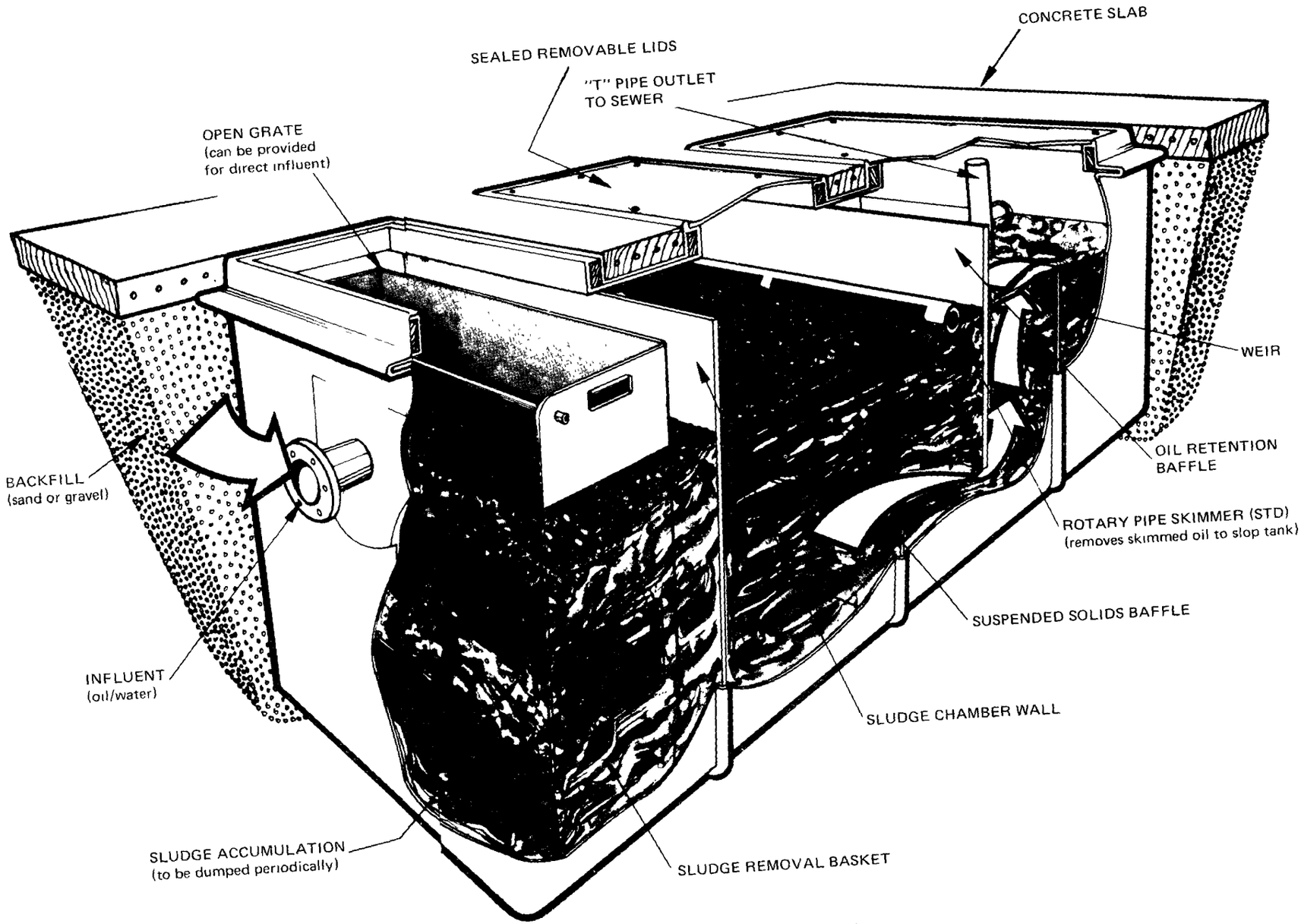

Figure 13. Gravity Separator with Grit Removal

then pumped from the platform to a waste disposal area (Figure 14). While skimming operations can remove essentially all of the floating oil (depending on the depth setting), the units do not separate the components of the layer removed and the oil can contain considerable water.

Gravity Separations

The most common gravity separator for oil removal is the American Petroleum Institute (API) type. Proprietary versions of this type of oil removal equipment are also available. The API manual cites specific minimum and maximum standards for these units.[7] Figure 15 illustrates a common separator of the API type.

The API separator has two main sections: the inlet and the oil-water separator channels. An adaptation of the API separator to include grit removal was shown in Figure 13.

The inlet, or forebay, helps reduce the flow velocity of the influent while collecting floating oil. This section is also used for grit removal, providing the necessary retention time and removal mechanisms (conveyors or buckets). The influent then flows into the separator channels through control gateways. Downstream from the gateways is a velocity diffusion device that reduces turbulence and distributes the flow equally to

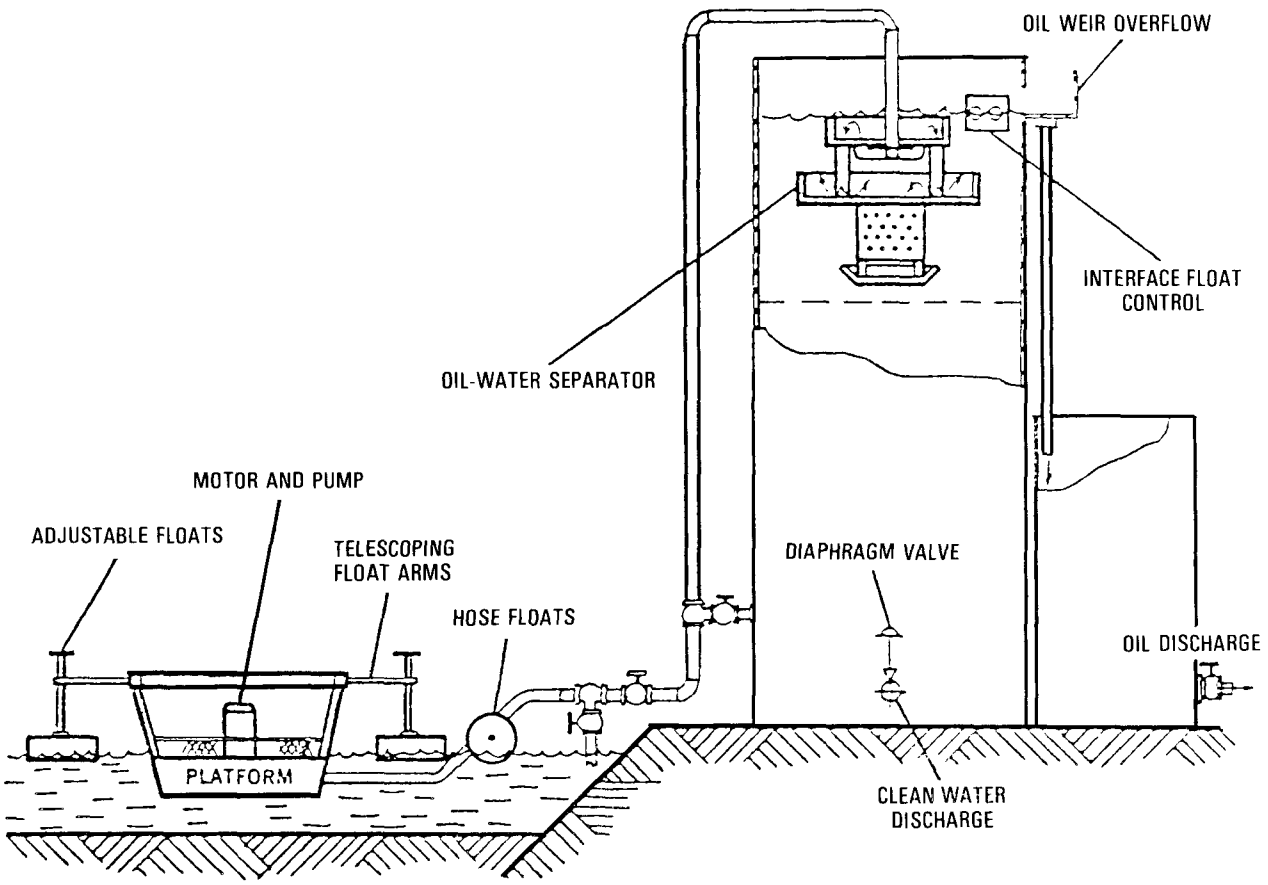

Figure 14. Floating Skimmer

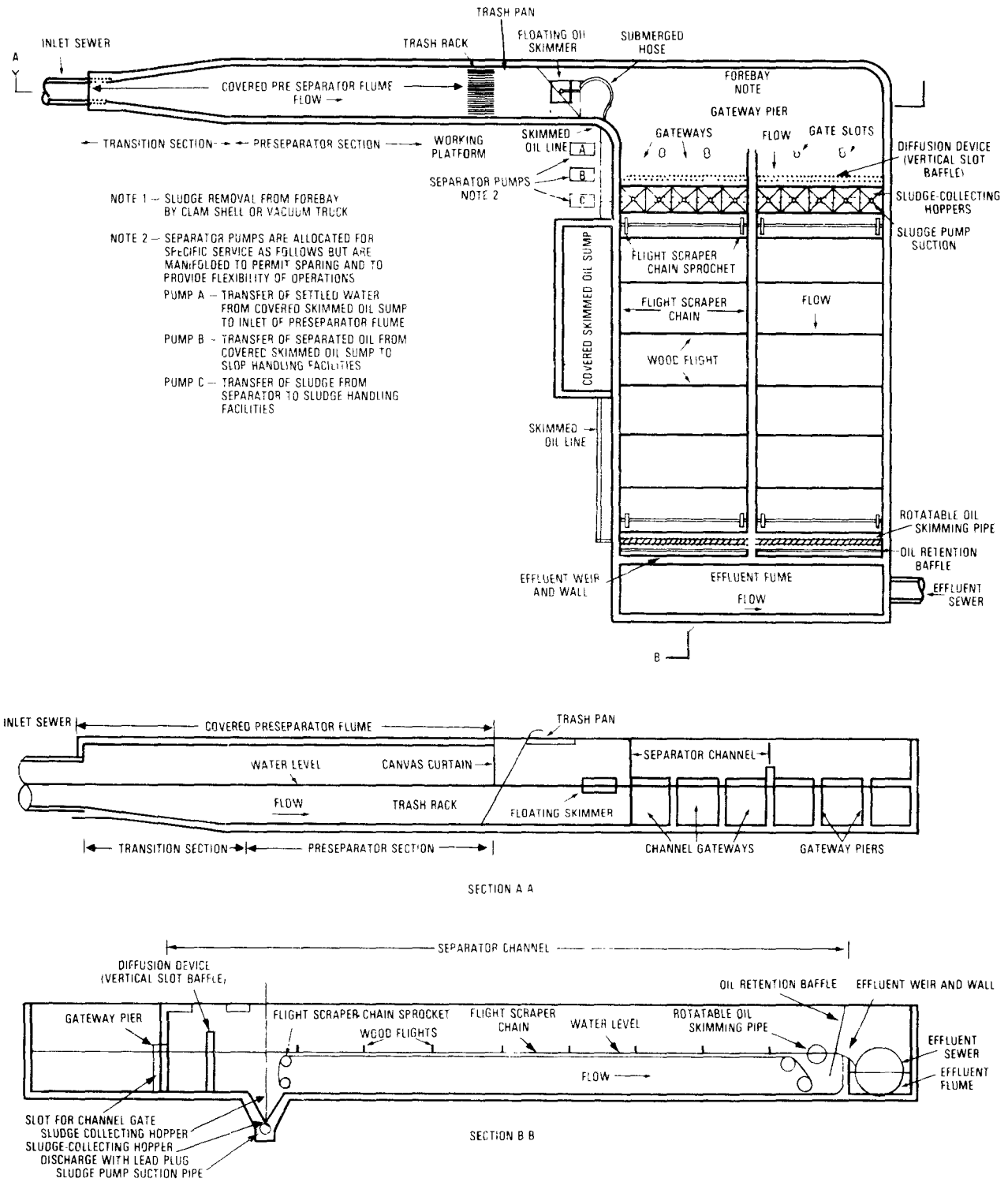

Figure 15. API Separator

the channels. The separator channels are where oil-water separation takes place; each one has a chain-type oil- and sludge-moving conveyor, with flights attached for half of the length. The flights, traveling with the flow, move free oil toward the skimmer and push the sludge into a collection area.

An oil skimmer and oil-retention baffle are also located in the effluent area of the separator. Beyond this, the waste stream flows over the wall of the effluent weir into the sewer.

Figure 16-a shows a slotted-pipe skimming arrangement. The pipe is installed in a tank parallel to the water surface. The slot is set so that the depth of oil to be removed flows into the pipe, where it travels by gravity to a collection area.

Figure 16-b illustrates another piping assembly. The skimming pan, or trough, is set at the desired level and free oil on the surface flows into the pan and down a hose to a collection area. The float on this particular skimmer constantly adjusts the pan level.

Air Flotation

In this technique, air is induced into a pressurized waste stream tank to dissolve the air in the water. The air-saturated, pressurized water becomes supersaturated when released through a pressure-reducing valve. The excess air, in its supersaturated state, forms small bubbles in the water that attach to oil droplets, which then float to the surface for removal. Chemical coagulants can be added before air is released into the tank to aid in adsorbing bubbles. Removal of emulsified oil from large wastewater flows by combined chemical flocculation and air flotation is a common procedure.

WASTEWATER CONDITIONING

Grit and free oil quickly settle out of the waste stream when the flow rate is reduced to a nonturbulent state. The remaining pollutants settle at an unsatisfactory rate or remain in suspension. These particles include suspended and dissolved solids and emulsified oils that are stable in the water. This stability is due both to the small size of the particles and to charges between the particles and water that overcome density differences and gravitational effects. The fraction of these solids that remains suspended is termed colloids.

To remove these pollutants, the water must be conditioned or pretreated by adding chemicals to change the stability of the colloids by making them larger, enabling small particles to join into masses (flocs) with sufficient density to settle. Chemical pretreatment is also used to adjust the pH value of the stream or to cause a reaction with the dissolved solids to yield an insoluble, settleable product.

The types of pretreatment for conditioning the wastewater for solids removal are: (1) pH adjustment (to alter solubility of dissolved solids); and (2) destabilization treatment (to promote coagulation of colloids).

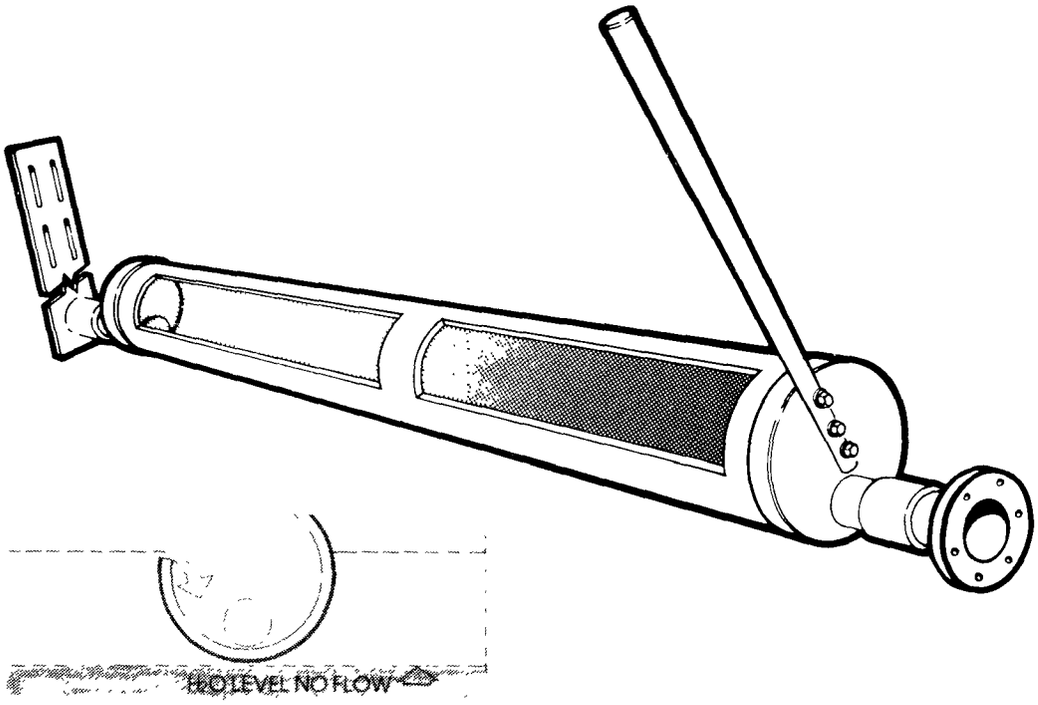

a

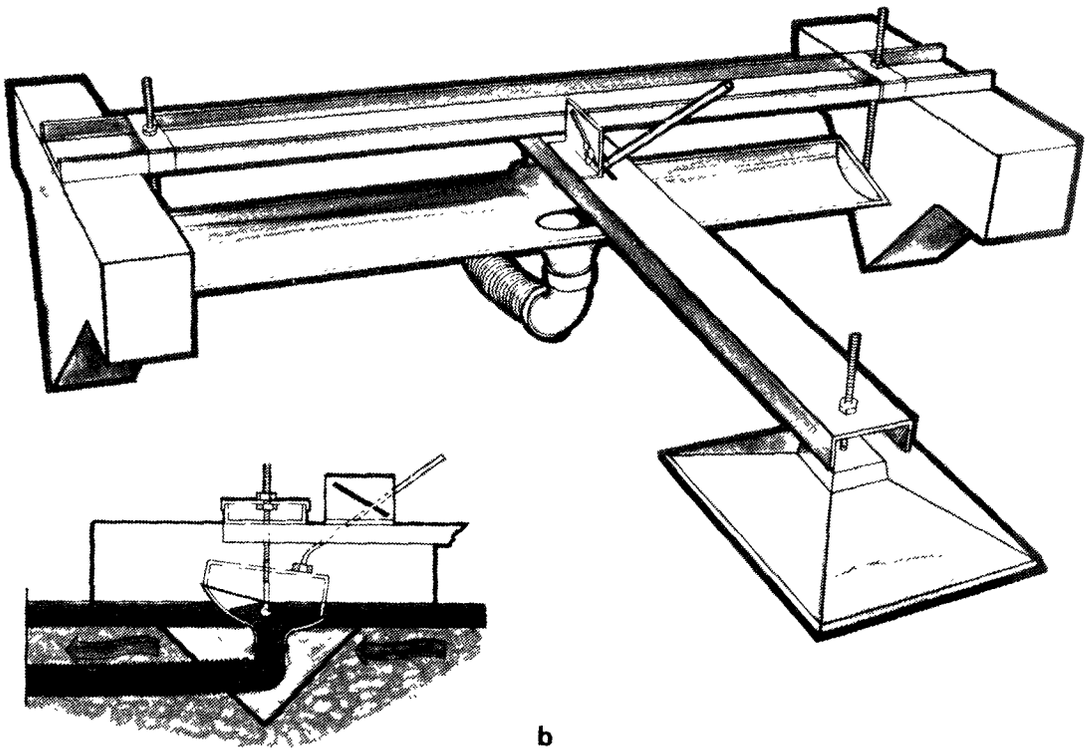

b

Figure 16. Common Skimming Devices

The treatment for emulsified oil is slightly different and includes a combination of chemicals and rapid agitation to free the oil from the emulsion. This step, emulsion breaking, will be discussed in Chapter VI, Residual Oil and Grease.

pH ADJUSTMENT

To meet the regulations, the pH value of a waste stream must be in the range of 6-9 (water alone is 7). Normally, a waste stream will be acidic (pH less than 7), and a base such as lime or caustic soda can be added to increase the pH. If the waste stream has a pH greater than 9, an acid can be added. Dosages are determined by standard laboratory experiments, explained in chemistry books and vendor literature. A detailed discussion on neutralization chemistry and hardware will be presented in Chapter VII, Handling Waste Acid Streams.

The importance of pH control by neutralization extends beyond meeting the regulatory figure, since it affects the subsequent reaction with dissolved solids (such as heavy metals) and the efficiency of coagulants in forming settleable flocs. For particularly troublesome waste streams, the pH may be adjusted to a value beyond the regulatory range for optimum removal of pollutants and then readjusted back before discharging the water.

NEUTRALIZATION TREATMENT: PRECIPITATING HEAVY METALS

Heavy metals dissolved in waste streams are one of the most prevalent pollution control problems.

The EPA is extending its regulation of heavy metals for 1977; iron, lead, chromium, zinc, copper, arsenic, cadmium, selenium, tin, nickel, and mercury are all being regulated in some industries.

Problems in reaching the required levels of metals in waste streams normally occur when:

- The flow of wastewater exceeds that allowed in the guidelines;
- Mixtures of heavy metals are being removed; or
- The precipitated metal salt is difficult to separate from the wastewater by gravity settling.

The majority of heavy metals will be removed from wastewater by combining the pH adjustment step, which precipitates the metals, and gravity settling. Adjustment of pH is the first step. Insoluble metal hydroxides are formed by the reaction of the basic chemical with the metal at a pH range of 6-9. Not all metals precipitate (become insoluble) at the same pH or to the same extent. Initial separation should therefore be made at the pH value that gives the most complete precipitation or that reduces the most toxic metals to the lowest degree.

Existing effluent limitations for various metals are closely related to the solubility of the metal in water and are regulated according to the total pounds of the metal per unit of production. Since the minimum concentration of a metal in wastewater is set by its solubility, any increase in the flow of the waste stream results in a proportional increase of the total pounds of metal at the same concentration. The manufacturer has no control over this. However, if the plant can reduce its flow below that anticipated in EPA's effluent guidelines, it may be able to meet metals-concentration requirements with less strain.

The problem is compounded for plants treating a mixture of heavy metals in their waste streams, since each metal has different solubilities at different pH levels. Figure 17 shows the theoretical solubility of several heavy metals as a function of pH. If each metal were the only component in the waste stream, then copper could theoretically be reduced to a solubility of .0001 mg/liter at a pH of 9 and nickel could be reduced to a solubility of .001 mg/liter at a pH of 10.5. At a pH of 8.5 the solubilities are .0005 mg/liter for copper and 1 mg/liter for nickel. When the two metals are mixed, however, the choice is either a pH optimum to one of them or a compromise between the two. Since complex interactions can occur between the metals, the situation is often even more complex. Thus, it is important to determine the exact characteristics of the waste stream through experimentation. If only nickel and copper were present (and removals close to theoretical), the concentration of each metal would be equal at a pH of 10, with a solubility of .0015 mg/liter.

Another problem in meeting heavy-metal guidelines is the difficulty of removing the metal precipitate resulting from pH adjustment. Settling rates vary widely with the final compound, requiring careful selection of the neutralizing reactant. Certain forms of iron hydroxide, for example, are very difficult to settle. Poor settling rates for metal salts resulting from neutralization will mean failure to meet limitations for both heavy metals and total suspended solids. The manufacturer must make sure that the neutralization reagent is compatible with the best overall removal efficiencies in the final separation step.

DESTABILIZATION METHODS

Destabilization is also a function of pH. Dosages of chemicals for destabilization are normally adjusted to achieve maximum floc formation at the pH value effecting minimum solubility of the metal salts.

As discussed earlier, suspended solids contain particles that will not separate from the wastewater in a reasonable time without additional chemical action to agglomerate them.

These very small colloidal particles are kept in suspension (stabilized) by electrical surface charges. The goal of chemical treatment is to neutralize these charges, causing the small particles to come together in sufficient size and density to settle readily. The chemicals used for this are called coagulants or flocculants (see Reference 14 for a more detailed discussion).

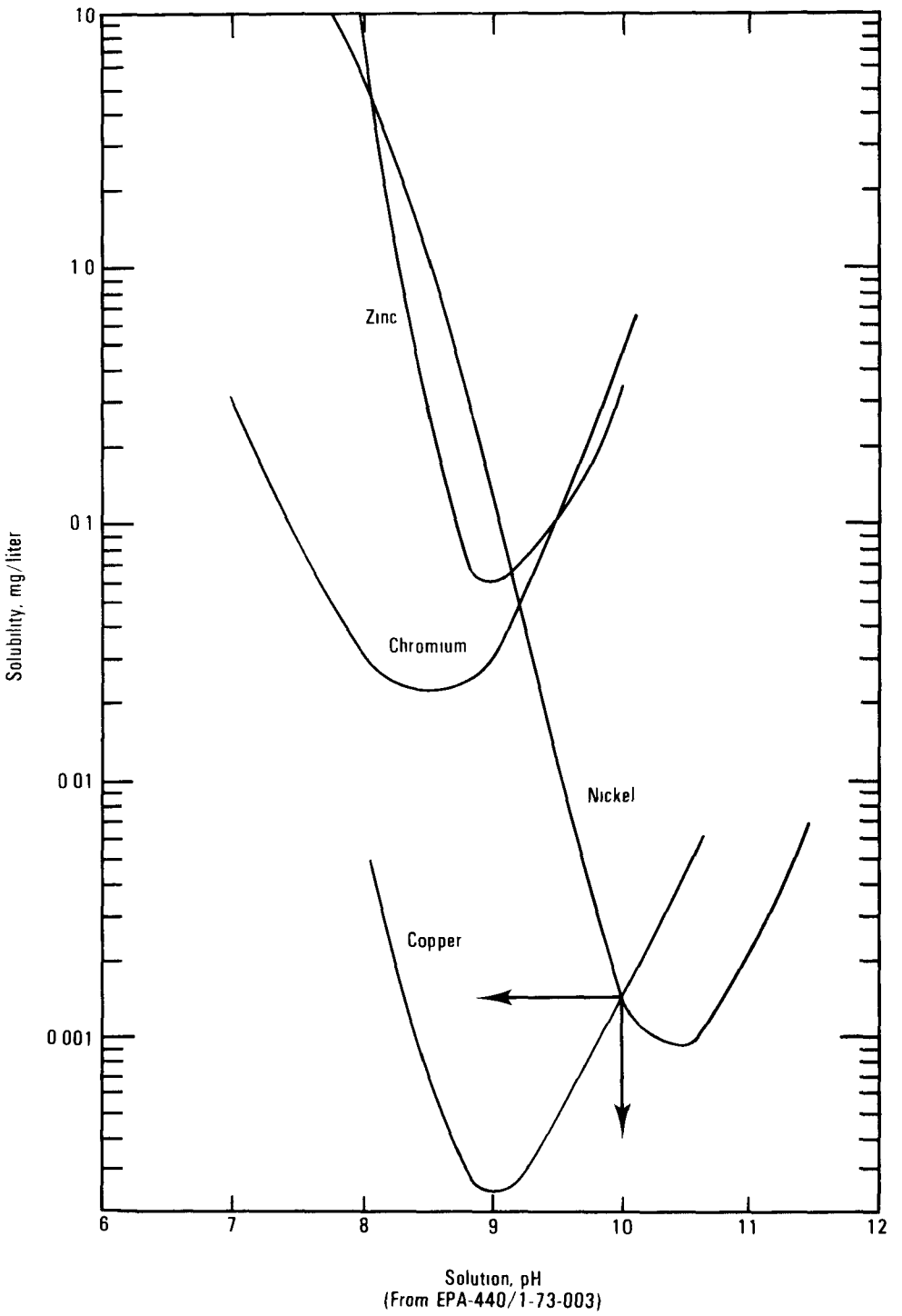

Figure 17. Solubility of Heavy Metals as a Function of pH

More specifically, destabilization and flocculation are usually effected by adsorption or enmeshment (entrainment) of the colloids, which enables the formation of flocs (masses of colloids). Adsorption is accomplished by adding polymers or metal salts to achieve physical or chemical bonding between particles. Enmeshment uses metal salts or lime to create a chemical that produces a precipitate. As the precipitate forms, the colloidal particles are trapped by it. The effectiveness of a coagulant is a function of the pH, the colloidal composition, and the coagulant material and dosage. Coagulation is the reaction that neutralizes the repellant charges of the colloidal particles and permits their agglomeration. Flocculation then promotes collision and interaction of the coagulated particles to develop the clusters, or flocs. Effective flocculation requires that the proper amount of energy be applied—just enough to bring the particles together; too much mixing will break up the flocculated material.

The first step in removing stabilized solids is to determine the most promising combination and amounts of chemicals and polymers. If excess chemicals are added, it is possible to restabilize the solid particles, since they will again become charged in the opposite direction.

The effects of adding coagulants will be charge-reduction of the ions in solution and a change in the pH. Metal salts such as alum (aluminum sulfate) or ferric chloride are common coagulants, used in combination with polymeric flocculants. Proper pH control of the waste stream alone can sometimes produce coagulation by enabling precipitation of materials, heavy metals, for example, already present (see Reference 14 for detailed discussion).

LABORATORY TESTS

It is impossible to determine coagulant dosages from theoretical calculations. Laboratory tests must be run on the effect of pH and various coagulants. Experiments have been developed that establish optimum coagulant concentrations and dosages; equipment vendors and chemical manufacturers can conduct the necessary tests. They have also developed favored combinations of neutralizing chemicals and coagulants.

In these tests, the pH is held constant while various dosages of coagulants are added. The pH is then changed in one direction by adding a suitable chemical, and the dosages are checked. If an improvement is noted, the pH is increased or decreased again until the optimum result is obtained. The most widely used laboratory tests are the jar test and a test to measure the conductivity—the "zeta potential"—of the particle charge.

Jar Test

This test is commonly used to determine the dosage and other parameters for optimizing solids settling rates and removal. It attempts to simulate the full-scale coagulation process, and since 1918 has remained the most common coagulant-control test in the laboratory.

The jar test uses a series of containers stirred by individual, mechanically operated stirrers (Figure 18). Wastewater samples are placed in the containers and treatment chemicals are added as the contents are being stirred. A simulated range of conditions is selected that represents optimum conditions. After a short period of rapid stirring (1-5 minutes) to ensure complete dispersion of the coagulant, the stirring rate is decreased and flocculation is allowed to continue for a variable period, 10-30 minutes or longer, depending on conditions simulated. The stirring is then stopped and the flocs are allowed to settle for a controlled time. The supernatant (layer of liquid above settled solids) is then analyzed for critical parameters. The usual analyses would be for turbidity, pH, and residual coagulant.

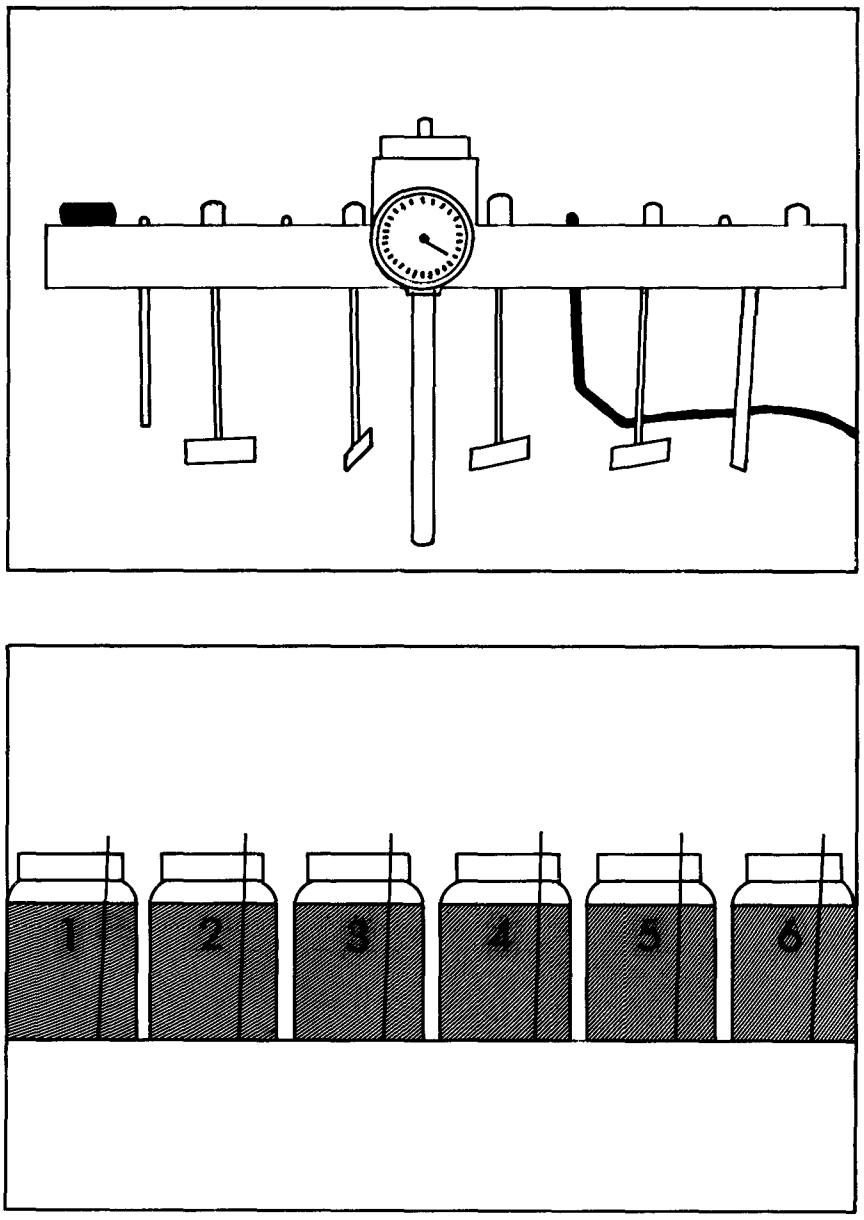

Figure 18. Jar Test Appratus

Supernatant samples may be taken at intervals during the settling period for constructing a series of settling curves, which provide more information on the settling characteristics of the flocs than a single sample. A dynamic settling test may also be used in which the paddles are operated at 2-5 rpm during the settling period, more closely representing settling conditions in a large horizontal basin with continuous flow.

Several 6-position stirrers are commercially available for jar tests. An excellent discussion of jar tests is included in the EPA Technology Transfer publication Process Design Manual for Suspended Solids Removal.[12]

Figure 19 shows typical curves obtained from settling tests such as the jar test. Curve A represents a coagulation that produced a uniformly fine floc, so small that at the end of 1-2 minutes of settling the supernatant had a turbidity about equal to that of the starting water. This degree of coagulation is unsatisfactory. Curve B represents the most common settling picture, in which the settling rate during the first 5 minutes is practically a straight line on a semilog plot; settling is rapid and clarification satisfactory. Curve C shows a mixture of large, rapid-settling flocs and small, slow-settling

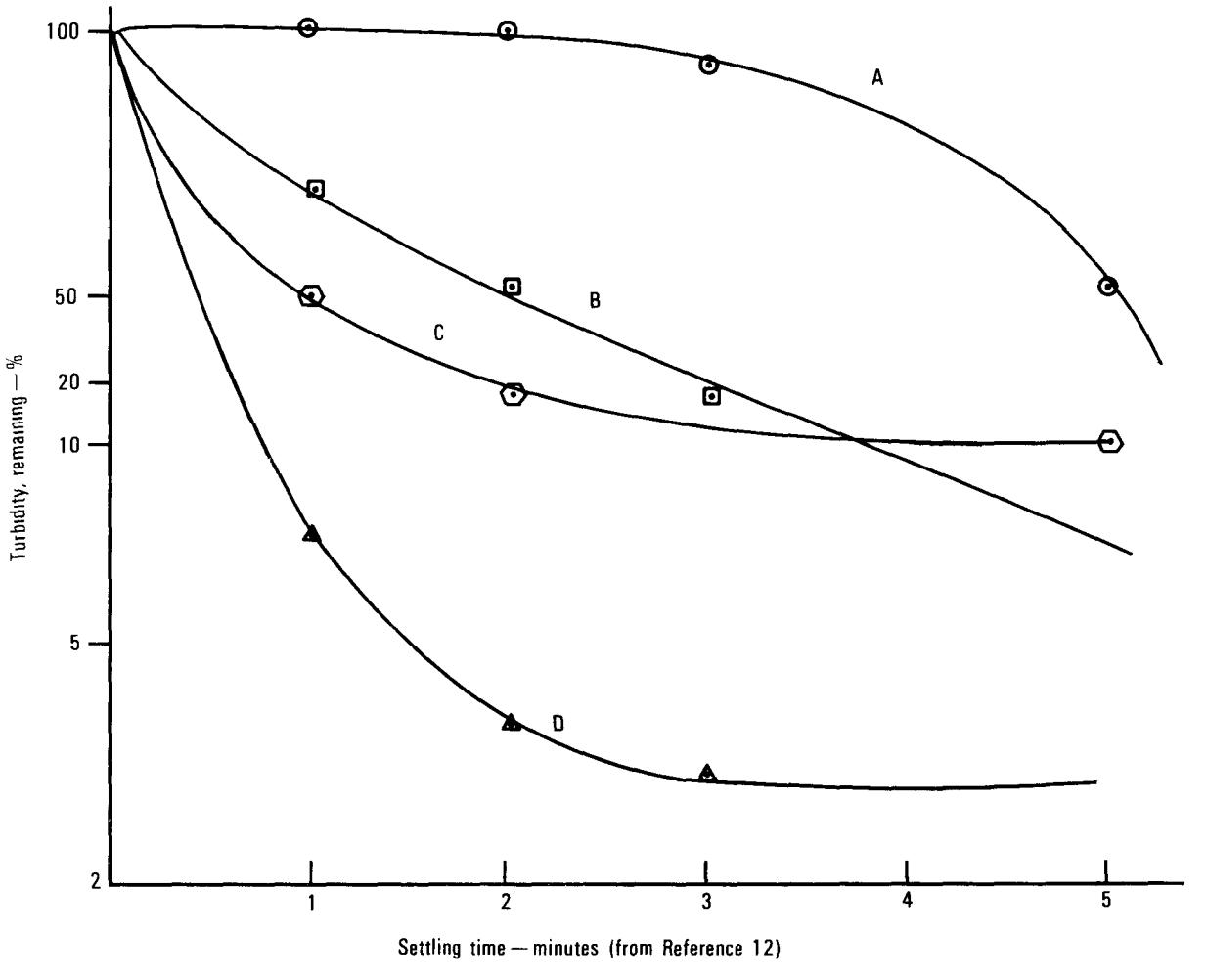

Figure 19. Typical Settling Curves Obtained from Jar Tests

particles. Settling was rapid for the first 2 minutes, but there was little further clarification. High residual turbidity may also have resulted from incomplete coagulation. Curve D shows excellent coagulation. The floc particles were so large and dense that 97 percent settled within 3 minutes. By then, sedimentation (solids settling) was essentially complete, since only 0.5 percent additional floc settled in the next 27 minutes. Final clarity of the supernatant was entirely satisfactory.

Measurement of turbidity is the quickest indicator of the degree of solids removal. The recommended procedure for turbidity measurement by light scattering is given in Standard Methods for Examination of Water and Wastewater;[13] however, other methods can be used, from simple visual evaluation of the level between the solids and the clear water portion to measurement of light transmitted on a laboratory spectrophotometer. Measurement of residual suspended solids is the only procedure that gives actual weight concentration of solids remaining, but it is too slow for process control. Residuals of coagulant in the supernatant liquid are usually significant and may be measured either manually or with automated equipment.

The experiments enable visual observations of the effects of coagulants and pH adjustment on sludge characteristics and volume and also of the effluent composition to be expected from the plant. The data from these experiments can be the basis for the plant's wastewater treatment design; in many instances, it provides the only available basis for this design.

Zeta Potential

The principal stabilizing factor for colloidal suspensions is electrostatic force and the repulsion between particles of similar charges. The "zeta potential" is the measure of these forces between the clear solution and the solution held within the boundary of the colloidal particles; it is the residual charge of the interface between the layer of bound water and the clear water. The importance of this value lies less in understanding these rather complex relationships than in their laboratory measurement for selection of coagulants.

The zeta potential is measured with a commercially available instrument, shown in Figure 20. A special cell is placed in a sample of treated water containing the coagulant and the floc formed from colloidal suspension. The cell is then placed under a microscope and a voltage is applied to electrodes at the ends of the cell. The charged particles migrate through the solution to the electrode that has the opposite charge. The velocity of the particle is proportional to the applied electrode voltage and the particle charge. The velocity is calculated by dividing the distance the particle travels by the time of travel, the distance being measured by an ocular micrometer. The zeta potential is then obtained from charts, provided with the instrument, that combine the particle velocity with the instrumental parameters. The procedure is repeated, using various dosages of coagulants to arrive at the optimum level.

A sample plot showing zeta potential and turbidity measurements vs. coagulant dosage is given in Figure 21. In this case, the optimum dosage of the coagulant alum was 150 mg/liter. This value corresponded to a zeta potential of -3 millivolts. The

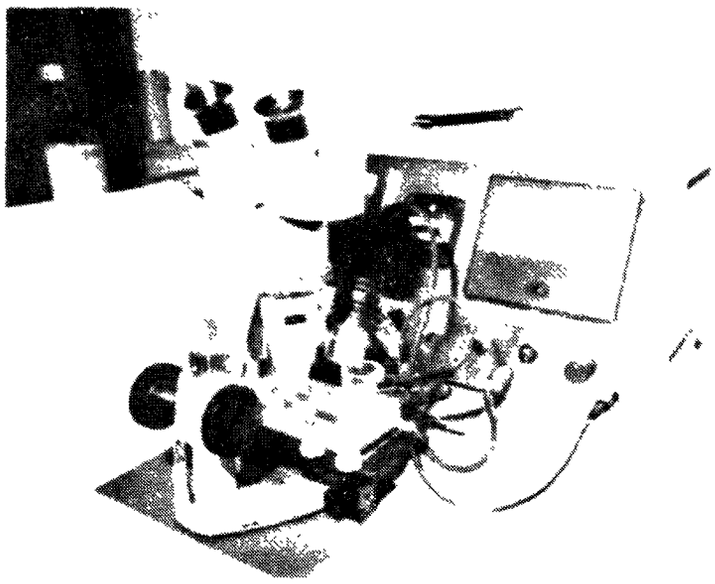

Figure 20. Zeta Meter Apparatus

control point will normally fall in the range of 0 to -10 millivolts for effective coagulant dosages. The initial zeta potential without coagulant added to the sample was negative; therefore, a cationic (positively charged) coagulant would be a logical choice. Higher concentrations of the coagulant restabilized the colloidal suspension; the turbidity increased from 4 units at the optimum dosage of 150 mg/liter to 8 units at a dosage of 300 mg/liter. The curve appears to level out at dosages above 350 mg/liter.

Zeta potential curves are often combined with the settling results from the jar test in determining optimum coagulant types and dosages. Once the initial coagulant dosage and type is determined, the zeta potential can be rechecked during actual operation as an indicator of possible wastewater changes.

COAGULANT TYPES

The selection of coagulants is based on the laboratory tests, described above, which indicate the settling rates at various coagulant dosages. Since the dosage must be carefully controlled, coagulant feed rates are also important. In many cases, several coagulants will produce similar destabilization efficiencies. The final selection then becomes one of economics and ease of handling. Commonly used coagulants are discussed below, with an explanation of how each one works and how it should be used.

Aluminum Sulfate (Alum)

The most common aluminum salt used for coagulation is alum. It is particularly effective in pH ranges from 5 to 7. The approximate chemical formula of alum is $Al_2(SO_4)_3 \cdot 14H_2O$. The solubility of dry alum in water is high and ranges between 6.03 lb/gal at a temperature of 32°F to 8.45 lb/gal at 85°F. It is white in color, acidic, and a 1-percent solution has a pH below 4. It can be stored without any special precautions other than moisture control.

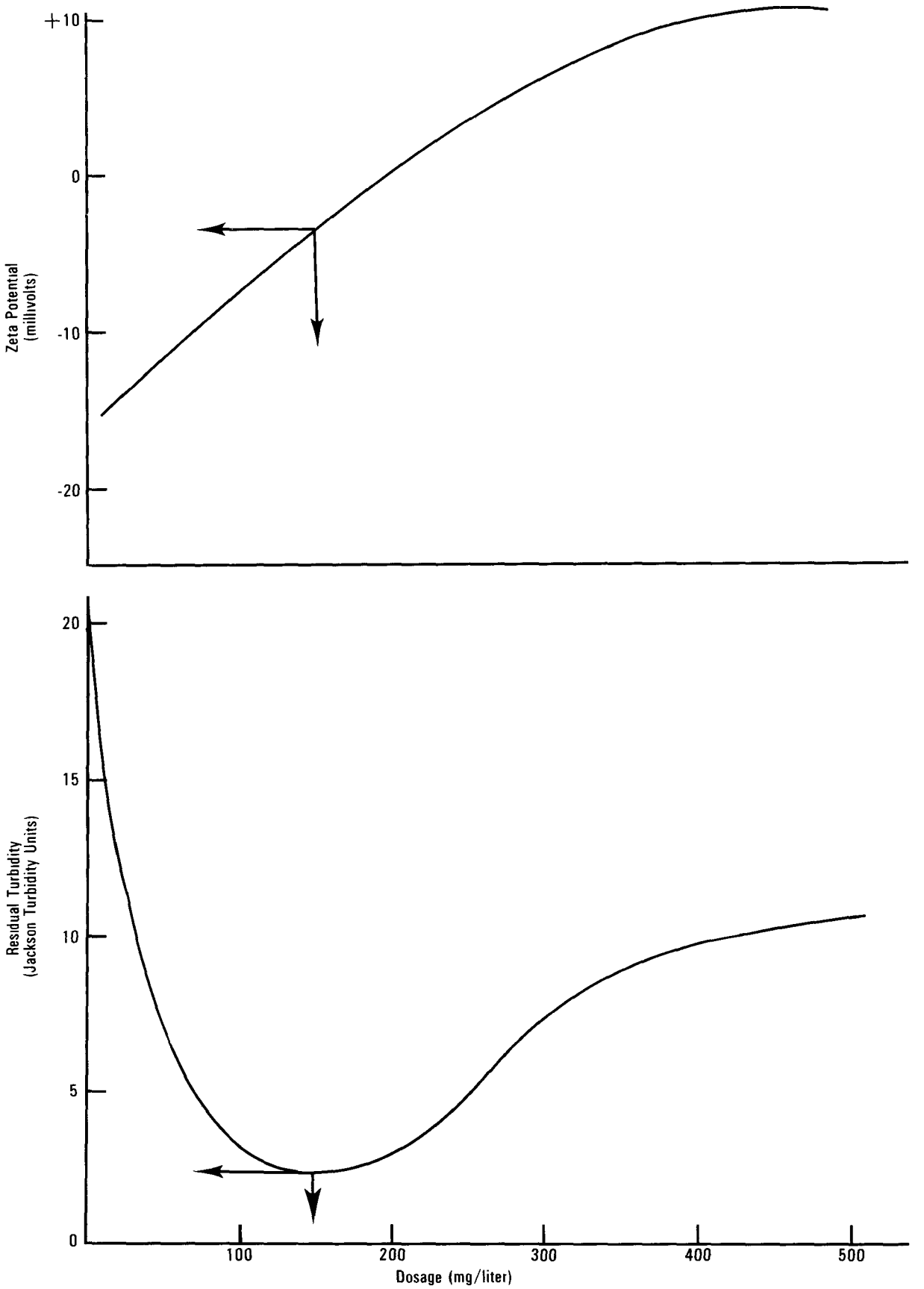

Figure 21. Predicting Optimum Coagulant Dosage

Many varieties of alum are marketed. The one most commonly used in water pollution control is ordinary ground or rice alum. Alum is also marketed in solution form, which does not require solids-handling and -dissolving facilities at the plant site. The price for liquid alum on a 17-percent Al_2O_3 basis, F.O.B. point of manufacture, is approximately $62/ton. Generally, the decision to use liquid or dry alum is based on the distance between the plant and the purchaser, since shipping costs of the liquid include 50-percent carrying water. Liquid alum is normally shipped as a 45-50 percent solution as $Al_2(SO_4)_2 \cdot 14H_2O$.

Although dry alum is not particularly corrosive, liquid alum is, and requires the use of plastic, stainless steel, or rubber-lined tanks and piping systems. The price for dry alum is approximately $15/100 lb.

Alum-handling precautions are not stringent. No particular industrial hazards are encountered. Standard protection, such as gloves and eye protectors, should be used. Alum is an irritant and should be promptly washed off if body contact occurs. Alum dust can be abrasive to industrial machinery and should be controlled.

Ferric Chloride

Ferric chloride for coagulant use is usually purchased as a liquid. The solution is a dark-brown, oily mixture, containing between 35-45 percent ferric chloride ($FeCl_3$) and having a density of 11.2-12.4 lb/gal. A pH of 2 is obtained with a 1-percent solution of ferric chloride. A crystalline form of ferric chloride has a chemical formula of $FeCl_3 \cdot 6H_2O$.

Ferric chloride solution is marketed in tank-car volumes of 4,000-10,000 gal, in truck volumes of 3,000-4,000 gal, and in 5-13 gal containers. The price, F.O.B. point of manufacture, is approximately $4.50-$7.50/100 lb as $FeCl_3$, dependent upon the solution quality; anhydrous technical grade $FeCl_3$ costs approximately $12.50/100 lb.

Normally, rubber-lined steel or plastic is used for constructing storage tanks and piping systems for ferric chloride. Ferric chloride should be used with the normal precautions for handling chemicals.

Ferrous Sulfate

Ferrous sulfate, or copperas, is a by-product of pickling steel and is produced as granules, crystals, and powder. The most common commercial form of ferrous sulfate is ferrous sulfate heptahydrate, $FeSO_4 \cdot 7H_2O$, with a molecular weight of 278, and containing 55-58 percent $FeSO_4$ and 20-21 percent Fe. The product has a bulk density of 62-66 lb/ft^3. When dissolved, ferrous sulfate is acidic. The composition of ferrous sulfate is quite variable and should be established in each case by consulting the supplier. It is readily dissolved in water to approximately 35-percent solution at room temperature. It is most effective as a coagulant when stream pH is above 9. The price of ferrous sulfate in bulk carload and truckload quantities is about $18/ton (21 percent Fe). The bagged cost is $24/ton. Ferrous sulfate is sometimes available at lower prices as a by-product of sulfuric acid recovery systems.

Precautions for dust and handling are the same as for other acidic solutions. Mixing quicklime and ferrous sulfate produces high temperatures and should be avoided unless proper control is exercised.

The granular form of ferrous sulfate is easiest to feed; either gravimetric or volumetric feeding equipment may be used. The optimum chemical-to-water ratio for continuous dissolving is 0.5 lb/gal to produce a 6-percent solution. The detention time is 5 minutes in the dissolver. Lead, rubber, iron, plastics, and type 304 stainless steel can be used for equipment for handling solutions of ferrous sulfate.

Ferrous sulfate reacts with the alkalinity of wastewater, or with added alkaline materials such as lime, to precipitate ferrous hydroxide. The ferrous hydroxide is oxidized to ferric hydroxide by oxygen dissolved in wastewater. Ferrous hydroxide is soluble, and oxidation to the more insoluble ferric hydroxide is necessary if high iron residuals in effluents are to be avoided. Flocculation with ferrous iron is improved by the addition of lime or caustic soda at a rate of 1-2 mg/mg Fe as floc conditioning agents. Polymers are also generally required to produce a clear effluent.

Lime Varieties for Wastewater Treatment

Ground limestone usually appears attractive in preliminary water treatment studies, because it is readily available at a low price. It is shipped directly from the mines and its properties vary widely with the source. It is not as reactive as lime and is more easily fouled. For these reasons, limestone should be selected only after pilot studies.

Lime is manufactured from limestone by heating to very high temperatures to drive off CO_2. An excellent reference on the use of lime in treating wastewater is available from the National Lime Association.[10]

Lime has a dual use in wastewater treatment: as a coagulant and for pH adjustment or control. It is generally available in two forms: quicklime or hydrated lime. Quicklime must be reacted with water (called slaking) to produce the hydrated compound which is the reactant or coagulant. A saturated solution of lime and water has a pH of 12.4.

Quicklime (CaO) can be purchased in bulk in both car and truckload lots. It is also shipped in 80- and 100-lb multiwall "moisture-proof" paper bags, costing approximately $842/ton. The bulk density is approximately 55-75 lb/ft^3 and the molecular weight is 56.1. Quicklime can contain significant amounts of impurities such as dirt and grit. It is highly hydroscopic. Quicklime is an extremely strong irritant, affecting eyes, mucous membranes, and upper respiratory tract. Hot lime suspensions can cause severe burns and eye injuries; adequate personnel-protection measures are required.

Hydrated lime [$Ca(OH)_2$] is usually a white powder (200 to 400 mesh); has a bulk density of 20-50 lb/ft^3; contains 82 98 percent $Ca(OH)_2$; and costs approximately $55/ton. It is slightly hydroscopic. Bagged hydrated lime is available, but costs $4-$16/ton more than in bulk.

Bagged lime should be stored indoors to prevent absorption of moisture. Cast iron or mild steel is satisfactory construction material for piping and storage facilities for both dry feeds and slurries. An efficient dust-collecting system is recommended at lime-handling points.

Lime is normally fed as a water slurry containing 15-30 percent lime as CaO. When large quantities are required, it is most economical to purchase quicklime and to install a slaking unit. Slaking is the designation for the reaction of quicklime to hydrated lime, shown below:

$$\underset{\text{Quicklime}}{CaO} + \underset{\text{water}}{H_2O} \longrightarrow \underset{\text{Slaked or Hydrated Lime}}{Ca(OH)_2}$$

Heat is evolved as the reaction takes place.

Lime slaking equipment is of two general types, "paste-type" and "slurry-type." Each system contains a mechanical quicklime feeder capable of flow variation and having an accuracy rate within 1 percent; a slaking-water feed system and controls; slaking compartments; and a section that removes the grit and dirt from the quicklime. Slaking reaction time is normally 5 minutes during continuous operation. Hydrated lime is continuously discharged. A lime slaker is shown in Figure 22, while the complete line feed system is shown in Figure 23.

Polymers

Polymers used as coagulants in wastewater treatment can be either synthetic or natural. They are composed of many small compounds (monomers), which can be

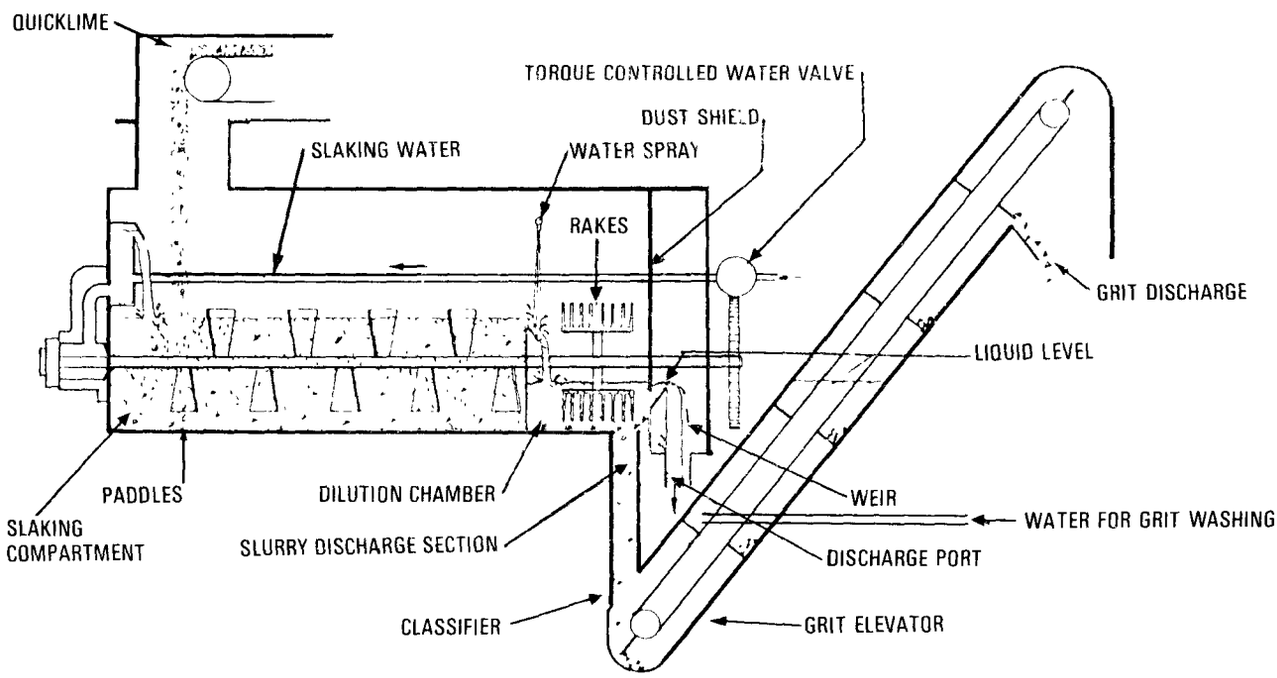

Figure 22. Lime Slaking Equipment

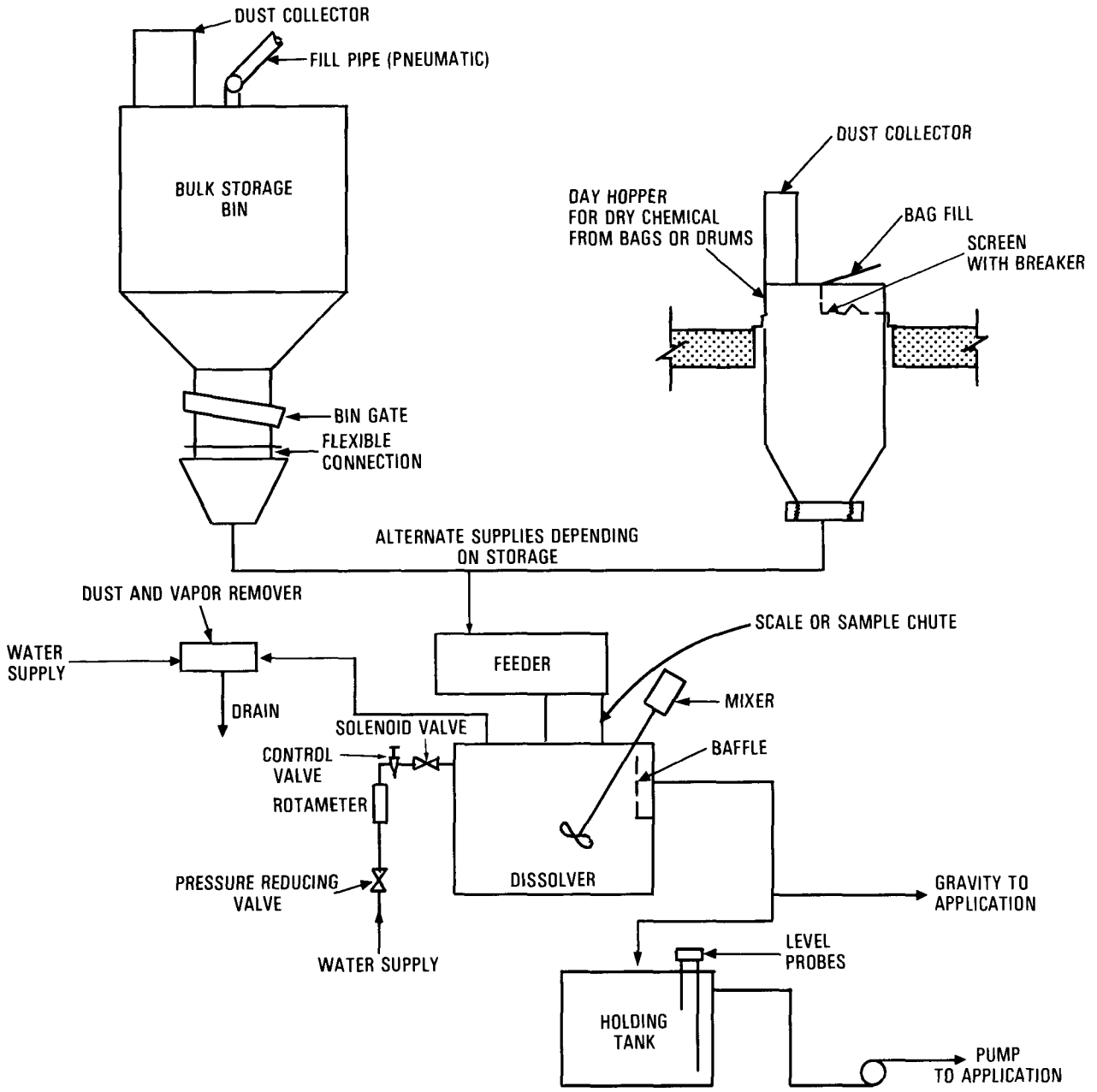

Figure 23. Lime Feed System

identical to each other, or of different materials. Polymers are chains of monomers whose number is varied by reaction to produce polymers with different molecular weights; those used in wastewater treatment normally range from 100,000 to 1,000,000. Their prime function is to act as a "coagulant aid," a term applied to chemicals such as lime that are added to wastewater, in addition to conventional coagulants, to improve colloidal destabilization and flocculation.

The term "polyelectrolyte" is used to describe chemicals of charged groups in the form of a polymer. The polyelectrolytes are further classified according to the type of charge they will have in solution, as follows:

Anionic Polyelectrolytes—negative charges

Cationic Polyelectrolytes—positive charges

Nonionic Polymers (Nonionic Polyelectrolytes)—neutral charge

The variety of monomers available as building materials for polymers is endless, meaning that there is a large assortment of polyelectrolytes available for use in coagulation. A partial listing, with physical properties, is provided in Table 14.

Polymers can be purchased dry or in liquid form. They are easily handled at the plant site and are nonhazardous. The usual protection from dust is required, and the storage facilities for the dry powders must be moisture-free. The materials of construction for storage and handling equipment are normally stainless steel 316 and plastics; selection is made on the basis of the polyelectrolyte chosen.

The coagulation mechanisms of polyelectrolytes are associated with charge reduction of the colloids, which results in adsorption or enmeshment of the individual particles to form a settleable mass. Due to the size of the polymeric compound, the polymers can attach themselves to the surfaces of the suspension at one or more sites. The excess part of the polymer chain extends into the solution and adsorbs onto other particles. The size of the floc being formed is generally restricted by the strength of the attractive forces between the particles and those between the solids and the stream.

Polyelectrolytes are being used extensively in coagulation processes because of their versatility, range of properties, handling ease, and effect on coagulation rates. Generally, cationic polyelectrolytes are used alone or as aids to other coagulants in forming metallic salts. Anionic polymers are used as coagulant aids in colloidal destabilization where positive charges are required to bridge the positively charged colloids. Nonionic polyelectrolytes are added to increase colloid concentration, thereby aiding floc formation, and to increase floc size by attaching themselves to agglomerated colloids.

Polyelectrolytes will:

- Increase the size and stability of the flocs;
- Decrease dosages of conventional chemical coagulants, such as alum;
- Decrease floc formation times;
- Extend the effective range of coagulant dosage;
- Extend range of pH over which conventional coagulants are effective; and
- Increase suspended-solids removal efficiencies.

COAGULANT STORAGE AND HANDLING

Handling, storage, and feed-flow control facilities are as important as proper selection of coagulants and determination of the coagulant dosage. As discussed

Table 14

Dry Polyelectrolytes

Polyelectrolyte	Type table 3	Bulk Density lb/cu ft			Flow table 4	Time to disperse into a coll. solution hour(s)	Solution—room temp. Visc.				Percent max solution concentration recommended
		Loose	Pack	Work			percent	cp	Sp gr	pH	
Aquafloc 409*	AP	25	54	28	CNKL	1-2	1	2350	1	4.5	1
Aquafloc 411*	AP	42	53	45	CNKL	1-2	2	480	1	4.5	2
Aquafloc 414	NP	48	59	61	CNKL	1-2	2	660	1	7	2
Aquafloc 418	CP				DPKL	1-2	2	23	1	2.4	2
Aquarid 49-702	CM	33	44	36	E S	1-2				7.9	
Calgon C-2256	CP	30	43	34	DLKP	1/2	1	75	1	6.4	1.5
Calgon C-2260	CP	24	35	28	DLKP	1/2	1	40	1	6.7	1.5
Calgon C-2270	CP			25	DLP	1/2	1	35	1	7.3	1.5
Calgon C-2300	NP	10	16	13	BLN	3/4-1	0.5	24	1	7	0.5
Calgon C-2325	AP	10	16	13	BLN	3/4-1	0.5	275	1	7	0.5
Calgon C-2350	AP	11	19	14	BLN	3/4-1	0.25	425	1	7	0.25
Calgon C-2400	AP	10	16	13	ALKM	3/4-1	0.25	740	1	7	0.25
Calgon C-2425	AP	16	28	22	BLKN	3/4-1	0.25	800	1	7	0.25
Calgon WT-2600	CP	23	34	27	DKLP	1/2	1	38	1	4	1.5
Calgon WT-2630	CP	29	42	33	DKLP	1/2	1.5	20	1	4	1.5
Calgon WT2660 (ST-260)	CP	27	39	31	DKLP	1/2	0.5	20	1	4	0.5
Calgon WT-2690	NP	9	16	12	ALM	1/2	0.5	23	1	7	0.5
Calgon WT-2700	AP	10	18	14	DLP	1/2	0.25	80	1	7.5	0.25
Calgon WT-2900	AP	8	13	10	AKLN	1/2	0.25	160	1	7.5	0.25
Calgon WT-3000	AP	16	29	22	AKLN	1/2	0.25	250	1	7.5	0.25
Hamaco 196*	S	20	25	21	DLP	1/2-1	1	<50	1	<6-7	2
Hercofloc 810	CP	22	31	25	EKLR	1-2	0.5	400	1	<6-7	0.5
Hercofloc 812	CP	21	31	24	EKLR	1-2	0.5	250	1	<6-7	0.5
Hercofloc 818	AP	30	40	33	DKLN	1-2	0.5	1000	1	<8-9	0.5
Ionac NA-710	AP	38	47	40	CNL	1/2-1	0.2	150	1	5-6	1
Jaguar Plus	CG	31	40	22	FLPR	1-2	1	800	1	8-9	1
Magnifloc 530C	CP										0.5
Magnifloc 820A	AD	34	40	35	CLP	1-2	1	160	1	4.2	1
Magnifloc 835A	AD	30	42	34	DKP	1/2-1	0.1	450	1	6-7	0.1
Magnifloc 836A	AD	27	35	29	CKP	1/2-1	0.1	360	1	6-7	0.1
Magnifloc 837A	AD	28	36	30	DLP	1/2-1	0.5	620	1	5	0.5
Magnifloc 865A	AD	40	42	50	CLN	1 1/2-2	1	130	1	4.1	1
Magnifloc 870A	AD			28		1/4	0.5	38	1	7.5	1
Magnifloc 875A	AD			28		1/4	0.5	38	1	7.5	1
Magnifloc 880A	AD			26		1-2	0.5	20	1	5.5	1
Magnifloc 900N	ND	32	40	33	CLN	1-2	1	150	1	4.7	1
Magnifloc 901N	ND					1-2	1	300	1	4.7	1
Magnifloc 902N	ND					1-2	1	200	1	4.7	1
Magnifloc 905N	ND	27	35	29	CLN	1-2	1	500	1	4.7	1
Nalcolyte 610	P	26	40	31	DKLP	1/2-1	0.5	700	1	5.1	1
Nalco 633-HD	CP	42	68	52	DJLN	1/4-1/2	2	190	1	3	2
Nalco 636-HD	CP	45	53	47	DLN	1/4-1/2	1.5	33	1		1.5
Nalco 635	AP	38	50	41	DLN	3/4-1	0.25	2500	1	8.5	0.25
Nalco D-2339	AP	39	53	43	DJLS	1/2-1	0.3	2000	1	7.0	0.5
Nalcolyte 675	AP	35	50	40	DLN	1/2-3/4	0.25	2500	1	8.5	0.25
Polymer F3	AG	32	40	34	DLN	1-2	4	800	1	9.5	4
Polyfloc 1100	AD	34	40	35	CKN	1-2	0.5	2000	1	8.5	0.5
Polyfloc 1110	AD	36	42	37	CKN	1-2	0.5	2400	1	7.5	0.5
Polyfloc 1120	AD	36	42	37	CKN	1-2	0.5	3500	1	8.8	0.5
Polyfloc 1130	AD	35	48	39	DKP	1-2	1	3000	1	8.8	0.5
Polyfloc 1150	AD	33	45	36	FJR	1/2-1	1	1000	1	6-7	1
Polyfloc 1160	CD	34	40	35	CJN	1/2-1	1	1300	1	5-6	1
Purifloc A-23	CD	42	53	45	BKP	1-2	0.1	950	1	10	0.5
Superfloc 128	ND	28	33	29	CLN	1-2	1	750	1	6-7	1
Tychem 8024*	ND			40		1-2	1.0	200	1	5.5-6	1.0
Tychem 8013	ND	33	43	36	CLN	1-2	1.0	750	1	6	1
Zeta Floc C*	BC[1]	48	68	54	EKR	1/4-1/2				8.2	1
Zeta Floc O*	BN[1]	52	74	59	EJR	1/4-1/2				8.2	1
Zeta Floc K (+$KMnO_2$)*	BC[1]	48	68	54	EKR	1/4-1/2				8.5	1
Zeta Floc S	BC[1]	54	78	61	E S	1/4-1/2					1
Zeta Floc WA*	BA[1]	54	78	61	E S	1/4-1/2					1
Zeta Flox WN	BN[1]	54	78	61	E S	1/4-1/2					1

*Approved by USPHS for potable water use
[1]Aluminum Silicate added.

(from Reference 12)

Table 14

Liquid Polyelectrolytes

Polyelectrolyte	Type table 3	Solution strength percent	Sp gr room temp. (about)	Viscosity—cp room temp.	pH (about)	Dilution
Aquafloc 403	AH	Full	1.12	100	9.6	4.1
Aquafloc 405	CH	Full	1.06	1,000	6.3	10.1
Aquafloc 407	NH	Full	1.00	10,000	4.3	10.1
Aquafloc 408*	AH	Full	1.01	1,500	3.4	10.1
Aquafloc 410	CH	Full	1.03	1,000	10.2	10.1
Aquafloc 412	CH[1]	Full	1.25	50	1.0	4.1
Aquafloc 415	AH	Full	1.03	1,000	11.5	10.1
Aquarid 49-700	CM	Full	1.1	100-500	7.8	10.1
Aquarid 49-701	CM	Full	1.1	25-150	7.8	10.1
Aquarid 49-703	AH[2]	Full	1.2	200-500	11.5	20.1
Cat-Floc (WT-2870)*	CH[3]	Full	1.025	2,000	4.2	<10.1
Magnifloc 521-C	CH	Full	1.15	225-325	4.5	<10.1
Nalcolyte 603	CH	Full	1.6	80	8	<10.1
Nalcolyte 607	CH	Full	1.17	50	7.5	<10.1
Natron 86, 18%	CH	Full	1.06	300-500	3	< 0.5
Polyfloc 1170	H	Full	1.06	50	9	
Polyfloc 1175	H	Full	1.08	700	9	

*Approved by USPHS for potable water use
[1]Plus a primary coagulant
[2]A linear homopolymer of diallyldimethyl ammonium chloride
[3]Polyaromatic.

TYPES

A - Anionic
As - Slightly Anionic
B - Bentonite Clay or Clay, natural, colloidal-like type
b - plus Bentonite
C - Cationic
D - Polyacrylamide, Synthetic, High M.W., Polyelectrolyte Polymer
E - Polyacrylonitrile, Synthetic Polyelectrolyte
F - Sulfonated Polymer
G - Guar Gum, Polysaccharide, Natural Polymer
H - High M.W., Organic Polymer
J - Alkyl Guanidineamine Complex
K - Sodium Alginate or Algin Derivative, Natural Polymer
L - Loguminous Seed Derivative, Natural Polymer
M - Polyamine, Synthetic, High M.W., Polyelectrolyte Polymer
N - Nonionic
P - Synthetic High M.W., Polyelectrolyte Polymer
R - Polyacrylamide and Carboxylic Group
S - Starch, derivative, modified, etc., Natural Polymer
T - Synthetic Polymer and Caustic Soda
U - Sodium Carboxymethylcellulose, Natural Polymer
X - Ethylene Oxide Polymer
Y - Carboxyl Polymer
2 - Biocolloid + Inorganic Coagulant + Caustic Soda
3 - Hydrophylic Colloid + Pregelatinized Starch in Alkalai
4 - Aluminum Hydroxide + Complex Organic Polymer
5 - Alumina + Polymer + Caustic Soda
6 - Polyacrylic Acid or Polyacrylate of Sodium or Ammonium
7 - Aluminum Hydrate + Caustic Soda
8 - Alkalai Concentrate + Metallic Ions
9 - Chemically Modified Natural Polymer

Table 14

Liquid Polyelectrolytes (continued)

FLOW

A. Soft flakes, may hang up if packed excessively in a confining area, otherwise free flowing. Usually will not need aid (vibration or agitation).

B. Powdered, soft flakes, hang up if packed excessively in a confining area, may or may not need aid according to rate of feed, etc.

C. Soft granules, sometimes fibrous or flattish, may hang up if packed excessively in a confining area, otherwise free flowing. Usually will not need aid.

D. Powdered, soft granules, sometimes fibrous or flattish, hang up if packed excessively, may or may not need aid, according to other factors.

E. Granular, fluid powder, will arch if packed and can be fluidized or is floodable (to very floodable). Needs aid and may need rotor, according to rate, etc.

F. Granules and powder, will arch and can be fluidized. Needs aid and could need rotor, etc.

G. Cohesive powder and granules, will arch, but will not flood. Needs aid.

H. Cake at room relative humidity.

J. Tendency to cake (or mass) at higher relative humidity.

K. Cake at higher relative humidity.

L. Moisture absorption, may lessen flowability.

M. Practically no dust.

N. Very little dust.

P. Some dust.

R. Dusty.

S. Very dusty.

TRADE NAMES

Aquarid	-	Reichhold Chemicals
Calgon C	-	Calgon Corp.
Calgon WT	-	Calgon Corp.
Cat-Floc	-	Calgon Corp.
Hamco	-	A. E. Staley Manufacturing Co.
Hercofloc	-	Hercules, Inc.
Ionac NA-710	-	Ionac Chemical
Natron	-	National Starch and Chemical Corp.
Polyfloc	-	Betz Laboratories, Inc.
Polymer F3	-	Stein-Hall
Tychem	-	Standard Brands Chem. Ind., Inc.
Zeto Floc	-	Norvon Mining and Chemical Co.

earlier, the wrong coagulant dosage can adversely affect the settling and flocculation rates of suspended solids by causing the colloidal suspension to restabilize. Low coagulant flow rates have similar effects.

A typical solids handling system identical to the line feed system is shown in Figure 23. In general, the solids are fed as a solution or slurry into the waste treatment plant at chemical mixing sections. The system includes a storage bin for the solids, a solids conveyor to transport the material to the dissolver, a dissolver tank equipped with a mechanical agitator, water-feed system and control, and a hold tank. If the chemical is fed dry, the coagulant enters the treatment system from the feeder. The piping system, which includes pumps, instrumentation, and controls, is designed according to process conditions and physical properties of the fluids. A typical liquid handling system is shown in Figure 24.

Bins

Storage bins are available in numerous sizes, shapes, and materials. In general, the bin should be large enough to hold 30-45 days of feed and have a closed top and provisions for dust collection, air drying, and possibly fluidization or bin vibrators. The slope on the bin outlet is normally 55°-60° to permit free flow into the feeder.

Solids Feeders

Characteristics of solids vary greatly. Some are granular; others are pellets or powders. Some of them tend to break apart and upset the feed-rate control in volumetric units. Thus, selection of a feeder must be considered carefully, particularly in smaller facilities where a single feeder may be used for more than one chemical.

Generally, provisions should be made to keep all chemicals cool and dry; otherwise, they may cause problems in feeding equipment. Dryness is especially important, as water-absorbing (hydroscopic) chemicals may become lumpy, viscous, or rock-hard; chemicals with lower affinity for water may become sticky from moisture on the particulate surfaces, causing increased arching in hoppers. In either case, this will affect the density of the chemical and may result in inefficient coagulant flow into the treatment plant, since the measured weight or volume is increased by the added water.

The simplest method for feeding solid chemicals is by hand. Chemicals may be preweighed or simply shoveled or poured by the bagful into a dissolving tank. This method is limited to very small operations, or to chemicals used in very weak solutions.

Volumetric feeding of solids is normally restricted to small plants, to chemicals that are constant in composition and relatively unaffected by handling and storage conditions, and to low feed-rate requirements. Within these restrictions, several types of volumetric feeders are available, examples of which are shown in Figure 25-a and b. Feeding accuracy is usually less than 97 percent.

The volumetric dry feeder in Figure 25-a uses a continuous belt of specific width from under the hopper to the dissolving tank. A mechanical gate mechanism regulates

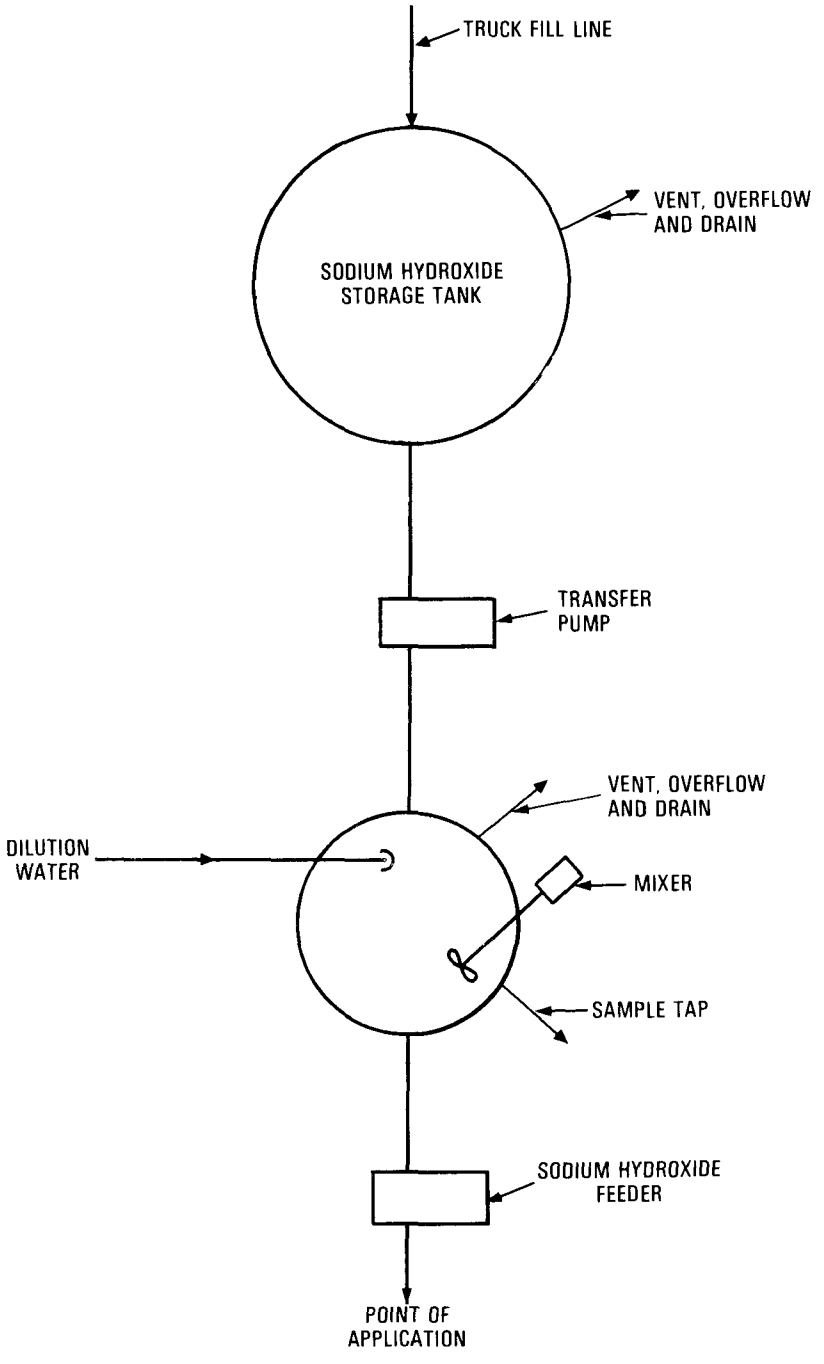

Figure 24. Liquid Handling System

the depth of the material on the belt. The feed rate is governed by the speed of the belt and/or the height of the gate opening. The storage hopper is normally equipped with a vibratory mechanism to reduce arching and to permit a uniform, continuous flow of solids to the feeder. This type of feeder is not well-suited to easily fluidized materials.

The type of feeder shown in Figure 25-b employs a screw or helix running from the bottom of the hopper through a tube opening slightly larger than the diameter of the screw or helix. Rate of feed is governed by the speed of the screw or helix rotation. Some screw-type designs are self-cleaning; those that are not are subject to clogging.

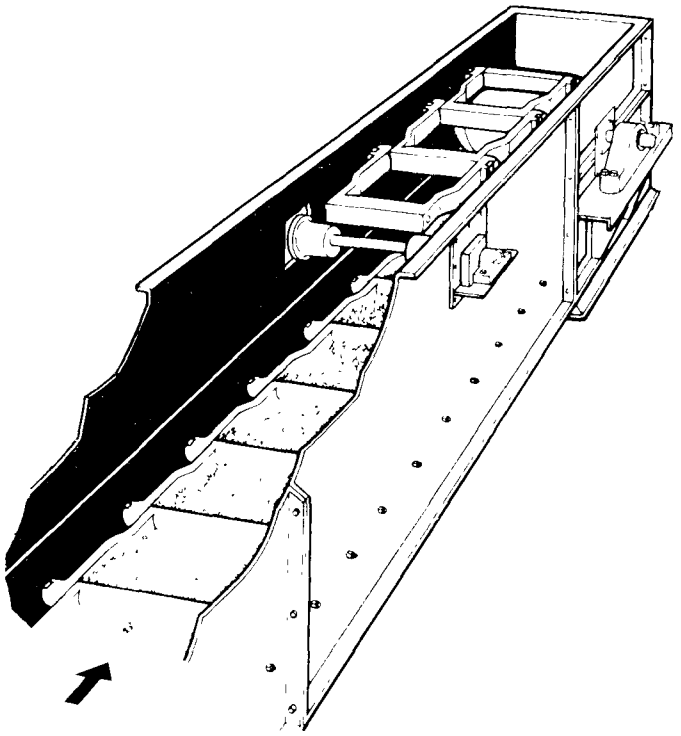

a

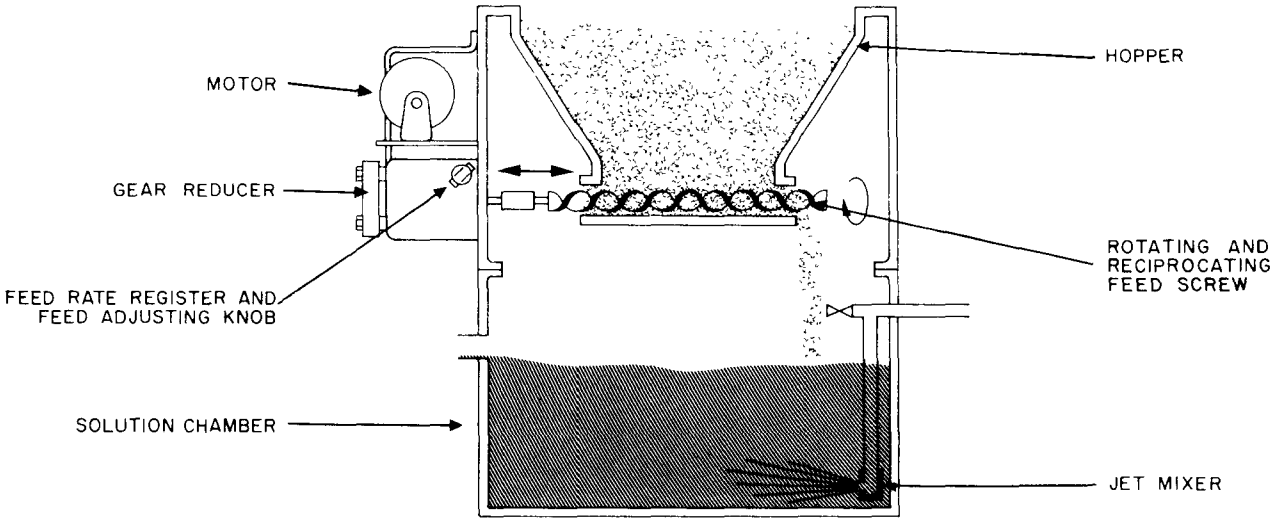

b

Figure 25. Typical Solids Feed Equipment

Most remaining types of volumetric feeders fall into the positive-displacement category. These designs, not shown, are normally used with powders or granular (nondusting) chemicals. All designs are based on some form of moving cavity, which can be either constant or variable in size. A unique design is the nonreciprocating progressive cavity metering pump. In all positive-displacement feeders, the chemical falls into the cavity, where it is more-or-less fully enclosed and separated from the hopper's feedline. The flow rate of chemicals is governed by the size of the cavity and the rate at which it moves and discharges. The positive-displacement control of the chemical feed rate will have an irreducible lower limit. To assure accuracy and consistency, these feeder units must be selected with the lowest and highest flow rates within 20-80 percent of the total band. Positive-displacement feeders often use air injection to enhance the flow of the material.

The basic drawback of volumetric feeders is their inability to compensate for changes in density of materials. This problem is overcome by modifying the design to include a gravimetric, or loss-in-weight, controller that allows for weighing of the material as it is fed. Beam-balance weight controllers measure the actual mass. They are considerably more accurate, over a long period, than the less-common, spring-loaded gravimetric designs. Gravimetric feeders are used where feed accuracy of about 99 percent is required for economy, as with very expensive chemicals or high flow rates. This makes them applicable to large-scale operations or where materials must be used in small, precise quantities to assure satisfactory coagulant or chemical-pretreatment performance. It should be noted, however, that even gravimetric feeders cannot compensate for weight added to the chemical by excess moisture.

Many volumetric feeders can be converted to loss-in-weight controllers by placing the entire feeder on a platform scale adjusted to neutralize the weight of the feeder. The volumetric flow is checked by calculating the weight loss over a specified period and dividing that rate by the specific volume of the chemical.

Liquid Feeders

Liquid feeders are generally a type of metering pump which offers the simplest control method, although the most expensive. These pumps are of the positive-displacement variety, either plunger or diaphragm type, with a variable-speed drive. The choice of liquid feeder is dependent on the conditions of the process; on chemical properties such as solubility; on suction and discharge heads; and on internal pressure-relief requirements. Once the correct drive speed is selected, the flow rate will remain constant and is usually not affected by changes in downstream pressure. The pumps can develop pressures exceeding several hundred pounds, making relief valves necessary to prevent damage to equipment such as sight-flow indicators. A high-pressure alarm with automatic shutoff is advisable where plugging of lines may occur. If possible, valves should be eliminated from the discharge lines to prevent damage to equipment if the valve is inadvertently closed. Although the pumps are calibrated, it is necessary to recalibrate them over the adjustable ranges to check accuracy and reproducibility of the flow rates. Examples of liquid feeders are shown in Figure 26-a and b.

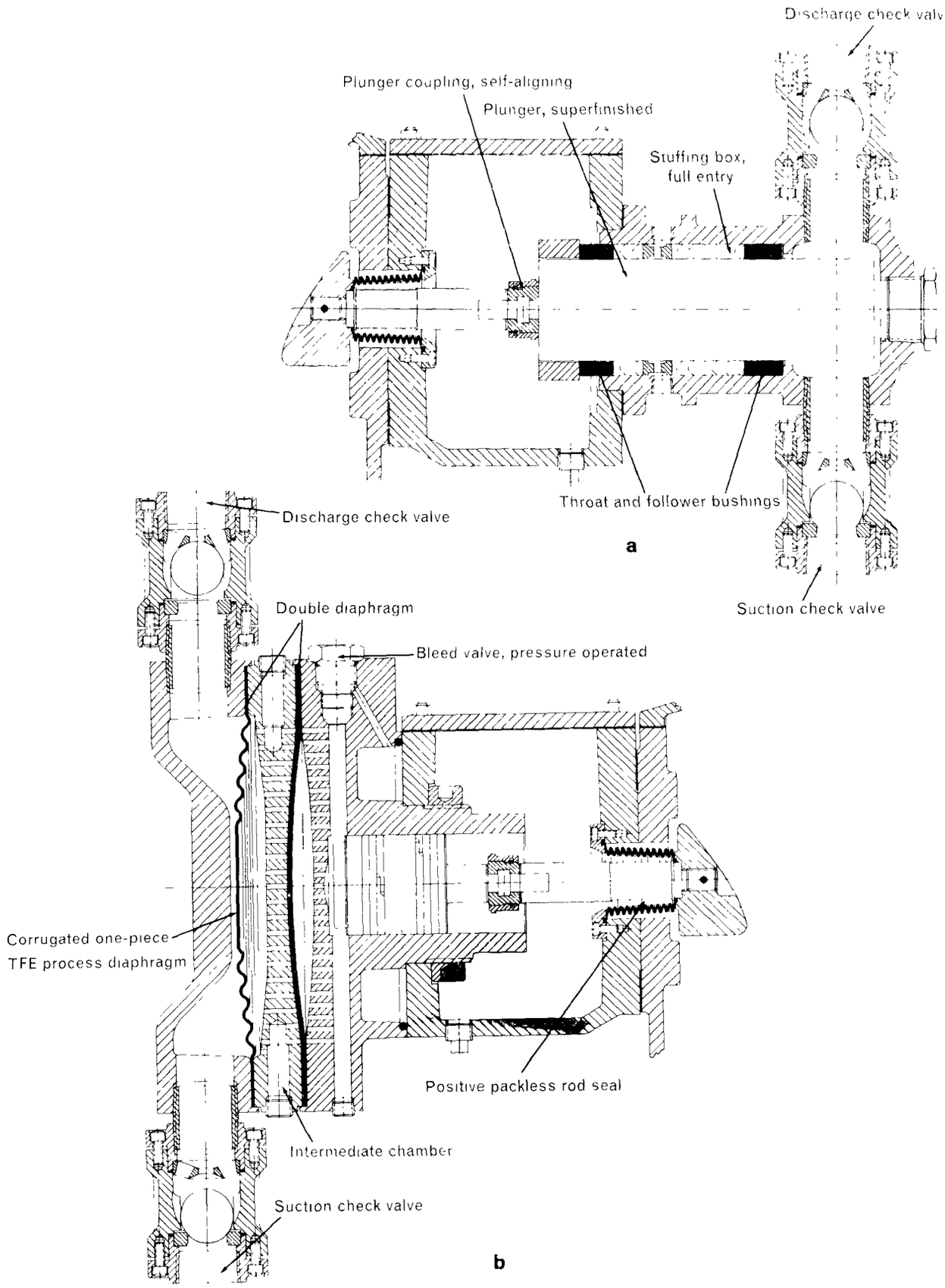

Figure 26. Common Metering Pumps

In some cases, control valves and rotameters with standard centrifugal pumps may be all that is required for liquid feeding. The flow rate is maintained by throttling back on the centrifugal pump discharge until the rotameter reading is satisfactory. Normally the rotameter, which cannot be used with highly viscous fluids or fluids containing solids, should be calibrated using the actual fluid. In other cases, such as lime slurry feeding, centrifugal pumps with open impellers are used with a metering device; this can be a scale tank with a positive displacement meter.

Solids Conveyors

In most cases, the solids feeder can act as the conveyor, as well as the flow controller, for moving solids from the bulk storage tank to the dissolver. If the distance between the two vessels is large, however, a conveyor will be needed, and a feeder, used before the conveyor, will provide the correct flow rate for chemicals. The conveyor can be one of several types, all familiar to members of the metal products industry: the carrying type (using belts, vibrating pans, or buckets); the drag or push type (using a screw or helix); or the elevator type (using buckets).

Dissolvers

Most chemicals added to waste streams for pretreatment must be mixed with water for the desired strength. Thus, most feeders, regardless of type, discharge their material to a small dissolving tank equipped with a nozzle system and/or mechanical agitator, depending on the solubility of the chemical. Insoluble materials such as polyelectrolytes may be spread out and subjected to a vortex spray or washdown jet of water just before they enter the dissolver. It is essential that the surface of each particle be thoroughly wet before the material enters the feed tank, to ensure dispersal and avoid clumping, settling, or floating.

A dissolver for a dry chemical feeder cannot be adjusted to vary its speed or capacity and must be designed for the specific job; one suitable for a rate of 10 lb/hr may not be capable of dissolving at 100 lb/hr. As a general rule, however, dissolvers may have excess capacity, except those for commercial ferric sulfate or lime slakers, which do not perform well if oversized.

COAGULATION EQUIPMENT

Once the laboratory tests for suspended solids removal have been conducted and the best coagulants and coagulant feed systems selected, the next step is to select the hardware for coagulation. The laboratory tests have confirmed that the solids can be settled at a reasonable rate by:

- Adjusting the pH (neutralization)
- Adding coagulants (flash mixing)
- Permitting the treated solids to form a settleable mass (flocculation)

The flash-mixing and flocculation steps constitute the coagulation process that prepares for solids removal by gravity settling. This section describes the basic equipment for the coagulation step.

CHEMICAL (FLASH) MIXING EQUIPMENT

Chemical mixing is the step in which the coagulant is added to the waste stream and thoroughly dispersed by mechanical or baffled action. This mixing promotes sufficient contact between the coagulant and the colloids and suspended solids so that the coagulant can be adsorbed and a precipitate formed.

The mixing is normally by mechanical agitation. The intensity and duration of the mixing must be controlled; overmixing or excessive agitation can break up colloidal masses or settled solids already present in the stream, while overly slow agitation will not adequately disperse the coagulant. Since the reaction rates are extremely fast—a fraction of a second—the mixing equipment designed for minimum residence time and for the maximum mixing speed at which there will be adequate dispersion without fractionation of the solids. Detention times vary with the type of stream, but normally range between 5-30 seconds. Typical chemical mixing patterns produced by various mixing blade designs are shown in Figure 27.

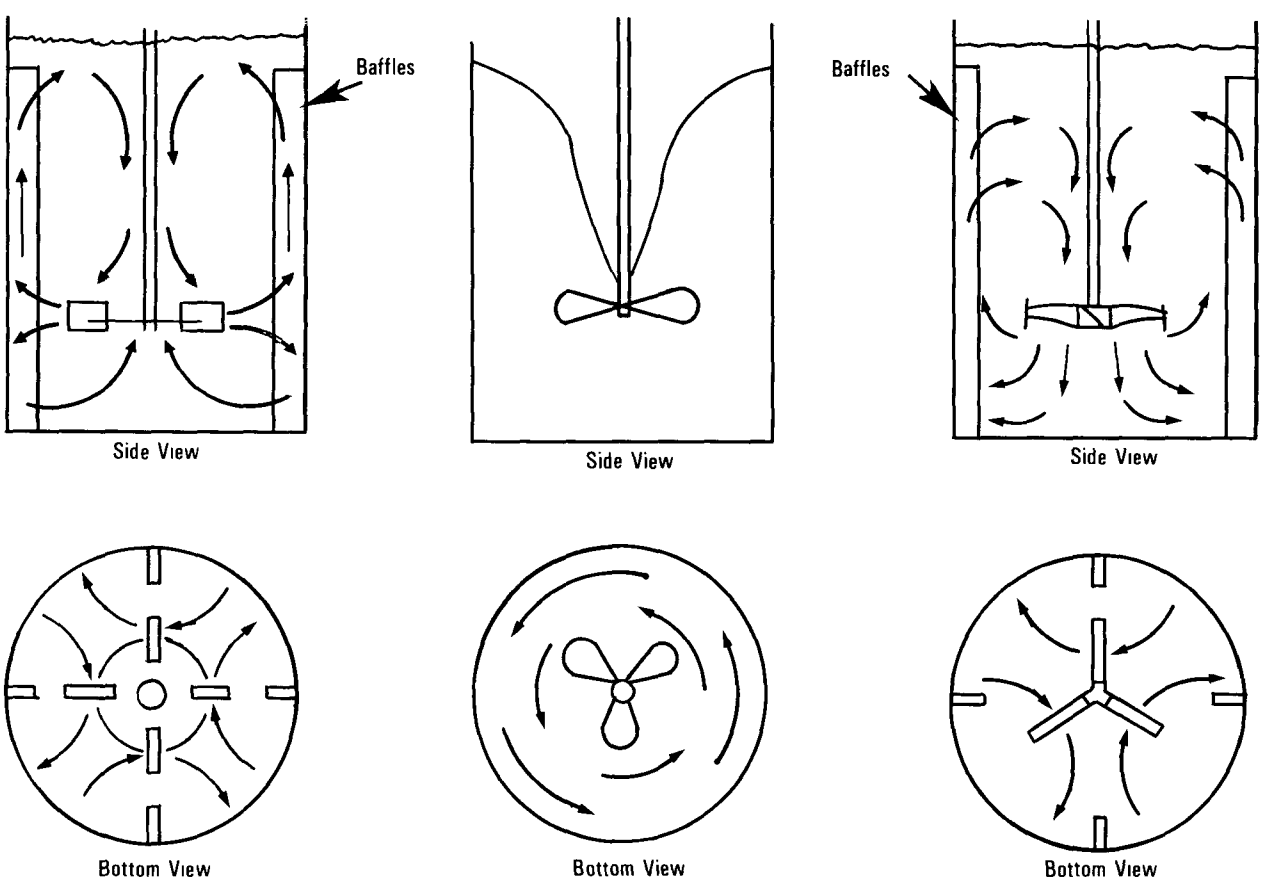

Figure 27. Typical Chemical Mixing Patterns

FLOCCULATION EQUIPMENT

After dispersion and destabilization of the coagulants in the mixing stage, flocculation of the destabilized colloidal suspension is induced, increasing the natural collision rates of particles. This is important, since the rate of floc formation is determined by the rate at which collisions occur, as is the binding strength between the colloidal particles and the coagulant. Basically, the same parameters apply as for chemical mixing, except that retention times are longer, mixing is less turbulent, and the equipment is more exotic.

For new applications, pilot tests should be conducted on the plant wastewater to determine the residence time and mixing speed. The flocculator is then designed to provide the experimental residence time and velocity gradient as well as to include design safety factors for conditions that can affect flocculation rates, floc mass, and settling velocities.

Flocculation equipment varies, but is generally of two types: mechanically mixed and baffled units (Figure 28). Figure 28-b illustrates typical baffled basins. These units have low operating and maintenance costs, but high space requirements. The mechanical flocculators (Figure 28-a) are similar to the chemical mixing tanks, but are much larger and require larger agitators operating at lower speeds. They normally have variable-speed mixing drives.

Retention times in the flocculators vary from less than a minute to nearly an hour. If the flocculation time is short, chemical mixing and flocculation can take place in the same mixing tank.

THE SEDIMENTATION PROCESS

After the suspended solids have been destabilized by coagulation (chemical mixing and flocculation), they are normally removed from the waste stream by sedimentation. Sedimentation hardware is designed to create the quiescent conditions necessary for settling. Because of their relative simplicity, sedimentation units are usually the most economic method for solids removal from high-volume flows.

This section describes the physical mechanisms affecting the settling of suspended solids, since these are the principles upon which the equipment is designed. The different types of sedimentation hardware, and their costs, will also be discussed. This information should enable the reader to participate more fully with the consultant or vendor in choosing the most effective equipment at the lowest operating and capital costs.

BASIC OBJECTIVES

The basic objectives for the sedimentation process are clarification or thickening; the hardware for the two functions are clarifiers and thickeners.

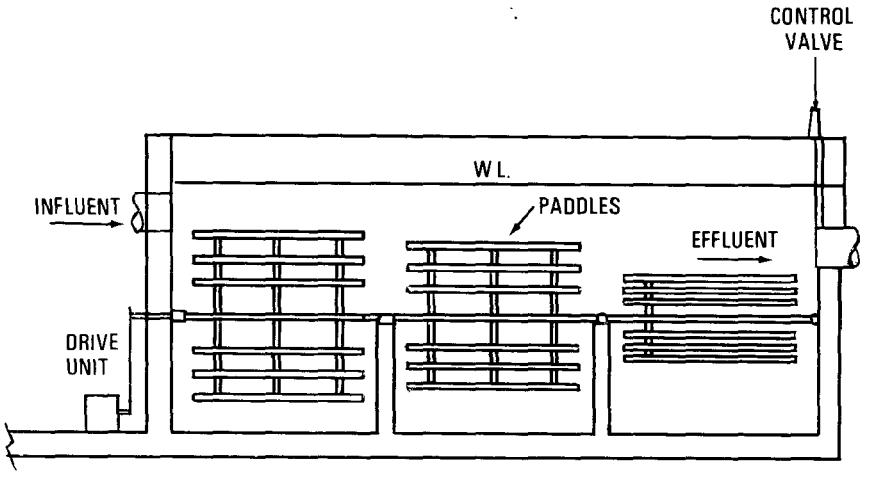

a

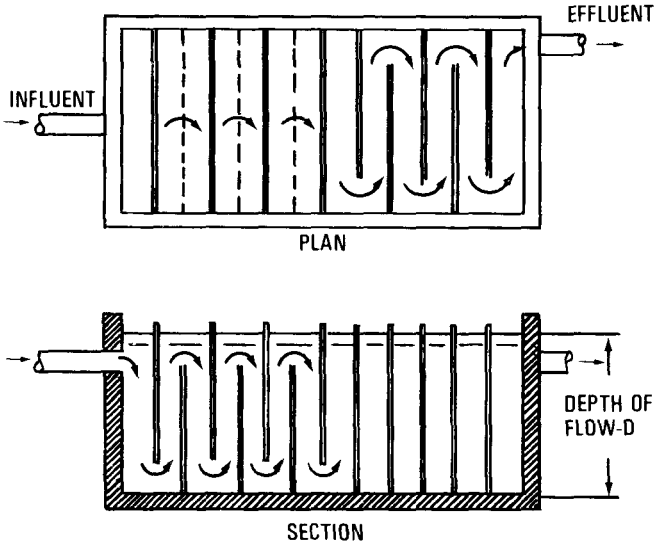

b

Figure 28. Flocculation Equipment

Confusion over the terms is common. Figure 29, which illustrates the sequence of clarification and thickening processes, will help to explain the difference. Clarifiers are used to produce a clear liquid discharge or effluent. The feed to the clarifier is very dilute and is normally received directly from the coagulation step. A clarifier gives a clear overflow stream, but will not produce a bottoms or sludge with a solids content much above 5 percent.

Since it is costly to dispose of a volume of water along with the solids, the bottoms discharge from the clarifier is often fed to a thickener to increase the solids concentration to a range of 5-10 percent. The liquid effluent from a thickener will not be as low in suspended solids as the overflow from a clarifier, since the feed is concentrated and the settling mechanisms are more susceptible to upsets. If a clear effluent is required, the dilute overflow from the thickener is recycled to the clarifier. Therefore,

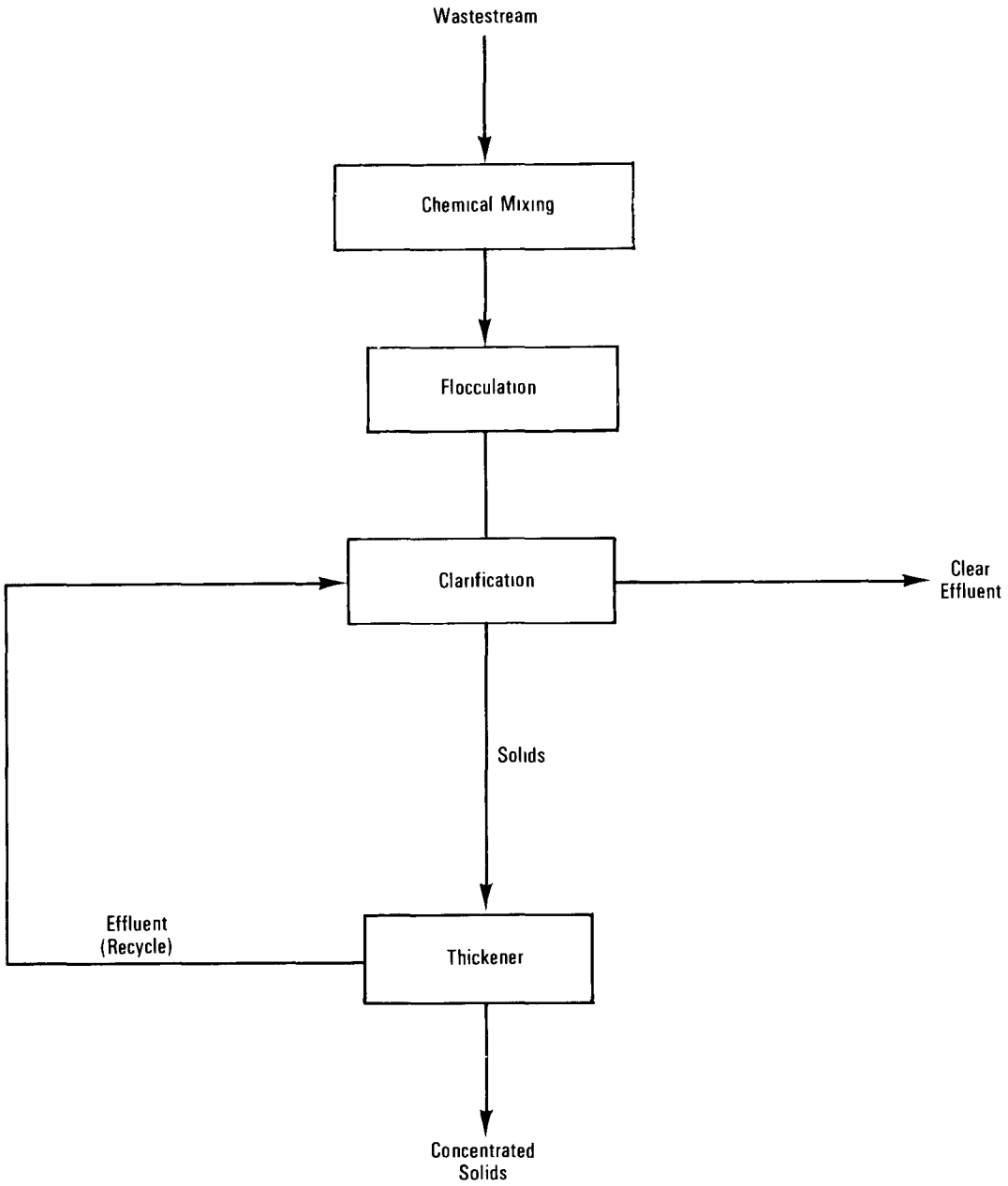

Figure 29. Typical Wastewater Treatment System

clarifiers and thickeners are often used together when both high solids content and a clear effluent must be obtained. Since the thickener handles solids whose settling velocities have already been maximized by coagulation, the coagulation step is rarely used again prior to thickening.

TYPES OF SETTLING

There are four basic zones through which a particle normally passes to its final disposition from a thickener. Basically, as the particles settle in the wastewater, the solution concentrates and further settling is restricted by the mass density of the suspended solids in solution. The requirements for each zone must be factored into the

design of the hardware. The four basic settling zones, or classifications, have been designated as:

Class 1: Free settling from a dilute suspension

Class 2: Hindered settling from a dilute suspension

Class 3: Zone settling

Class 4: Compression settling

It is common to have one or more of these settling actions taking place at once. Some of the particles will reach each stage before the rest of the mass; this depends mainly on the density of the particle. The design of sedimentation hardware is based on observations of each stage; this data is critical to the sizing specifications for each sedimentation process. Figure 30 shows a cross section of a typical settling system, as observed in a cylinder. The different settling zones also indicate the degree of concentration from top to bottom. The diagram in the figure indicates the time it takes for the particles to sink from one zone to the next. It is on this relationship between time and concentration that the design of sedimentation equipment is based.

A general description follows of each settling classification and its relationship to the design of sedimentation equipment.

Class 1: Free Settling

This process is similar to grit removal, discussed earlier. The particles settle independently, without interacting with other particles in the dilute suspension and at a rate directly related to their size, their density, and the density of the fluid.

Although free settling is the simplest of the settling classifications, equipment design for this process is complicated by the fact that the sedimentation tank must take into account the flow rate through the treatment system. Consideration must also be given to the overflow concentration to be achieved. If a very clear overflow is desired, retention time must be increased. Figure 31 gives some indication of the effects of the flow of the liquid through the system on the settling velocities of the particles. The particle is never settled out of solution until it reaches the bottom of the tank. The settler has an outlet zone where the turbulence is great enough that the settling rate of the particle is overcome by the change in velocity and direction. When the particles reach the settling zone, their settling velocity and direction are affected by the horizontal velocity of the liquid passing through the settling zone. Therefore, they follow a somewhat diagonal path. If the velocity of the particle is fast enough to permit it to settle before the outlet zone, it is considered to be settled out of solution. If its settling velocity is slow enough that it arrives at the outlet zone without reaching the bottom of the settler, it will be entrained and carried into the overflow.

Good discussions on the use of settling velocities and laboratory experiments in determining dimensions of a settling basin can be found in References 8 and 12. For our purposes here, it is important to define two of the basic parameters in the design of sedimentation processes:

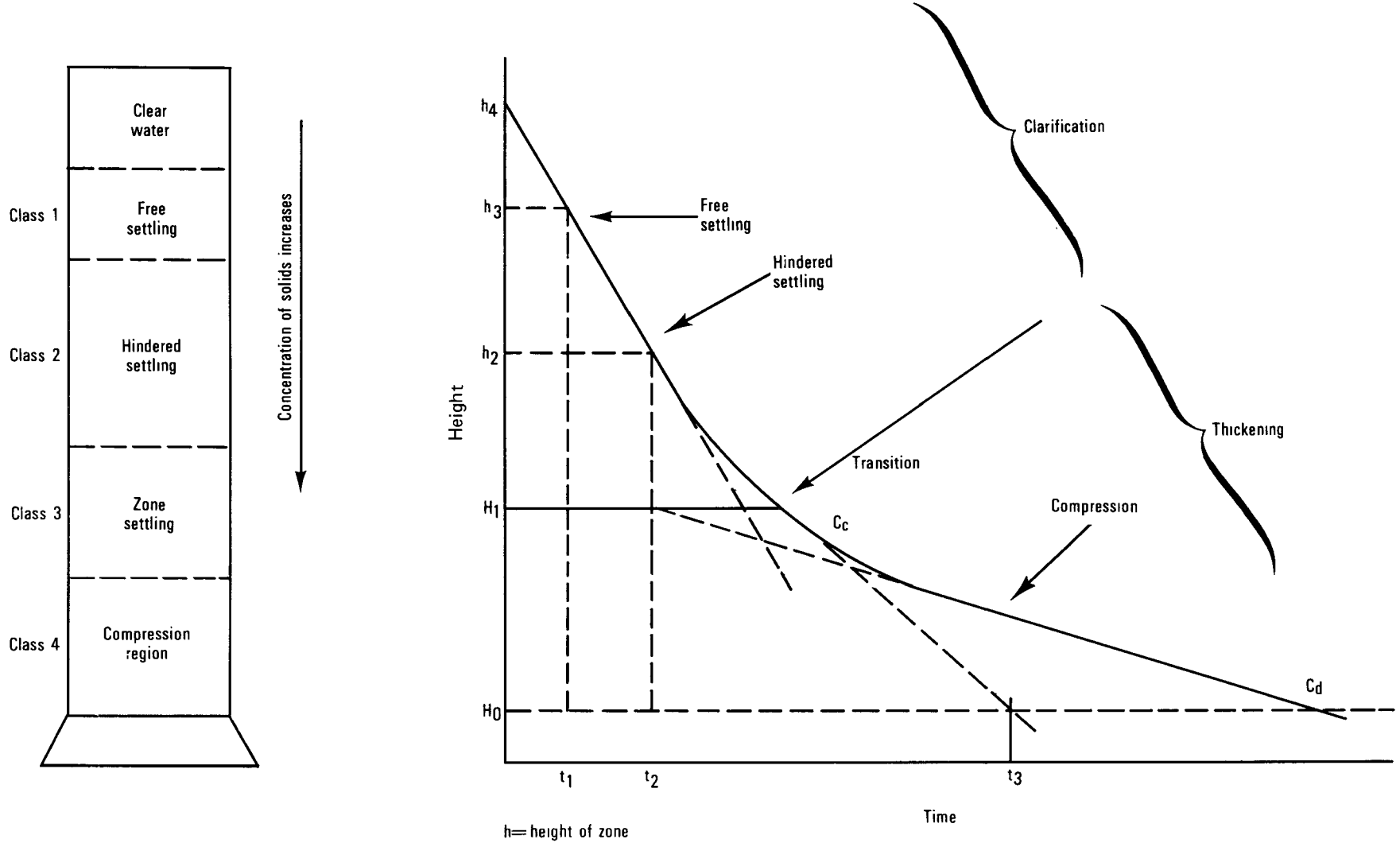

h= height of zone
t= time of settling
C_c= Compression area
C_d= Depth of settled particles

Figure 30. Sedimentation System Showing Various Zones of Settling

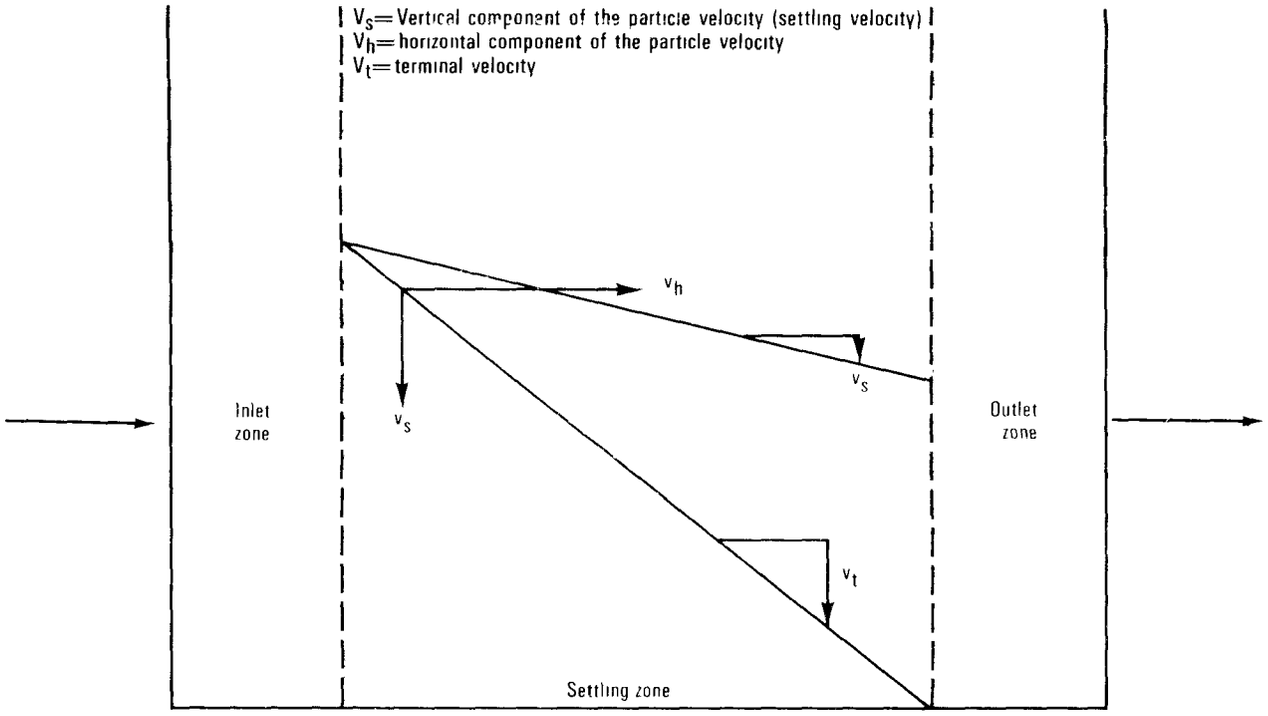

Figure 31. Settling Velocities in an Ideal Sedimentation Basin

- Terminal Velocity. As shown in Figure 31, terminal velocity (v_t) is that velocity at which particles with settling velocities greater than v_t settle out from wastewater.
- Surface Hydraulic Loading. This term is related to both the total residence time (expressed as the ratio of the flow rate in gallons/day to the horizontal area of the sedimentation unit in square feet). Since a particle is not settled out of solution until it reaches the bottom of the sedimentation unit, the depth of the tank is important in determining the residence time for the particles.

Unfortunately for the designer, free settling without particle interaction is rare in practice; some interaction normally occurs. Further, settling conditions are never perfectly quiescent, and the design of the system must take into account fluid flow, directional changes, partial settling rates, and fluid turbulence. Since it is difficult to relate these complicating factors to laboratory procedures, the designer normally begins with the procedures and formulas discussed here for Class I settling and further explained in Reference 8; he then applies various scale-up factors, along with data from previous commercial installations, to allow for the difference between laboratory tests and the normal in-plant efficiencies.

Class 2: Hindered Settling from a Dilute Suspension

As the particles settle under quiescent conditions, the density of their mass becomes greater, which will sometimes permit further flocculation during the settling. Turbulence in the settler may have the same effect. Hindered settling then occurs as larger, faster-settling particles overcome slower ones. The extent of this additional

flocculation and interaction is dependent on the coagulation process and the depth of the tank (which permits greater contact among particles). As was shown in Figure 30, hindered settling causes a slight decrease in the settling rate.

Hindered settling is a more complicated consideration in the design of a sedimentation process than free settling. To overcome the lack of mathematical models for design of the hardware, laboratory settling tests are performed in columns of the same height as those envisioned for the equipment. As the solids settle within the columns, samples are extracted at intervals and the percent solids determined at each port location along the column. When the desired concentration for the overflow is achieved, the settling time and the depth of the sediment are noted; the sedimentation basin area, residence time, and depth are then determined as for free settling. Detailed examples of how hindered-settling data are used in designing sedimentation equipment are presented in References 8 and 14.

The first two settling classifications are normally used to design clarification systems. The last two classifications, discussed below, are used in designing thickeners for the concentration of solids.

Class 3: Zone Settling

Zone settling involves the movement of a mass of particles that have coagulated during the flocculation in the hindered zone. The density of the particles is much greater than in the previous two zones. The solids settle as a consolidated mass, and a sharp boundary exists between this mass and the clarified liquid. All particles settle at the same rate. However, as shown in Figure 30, this rate sharply decreases as the particles try to settle further in the solution.

The designer uses laboratory settling tests very similar to those used for free-settling sedimentation equipment. However, with zone settling the procedures for calculating the design parameters are more complicated because the settling rate is not linear. In addition, the size is not based on a clear overflow, but on the desired final concentration of the sludge. Once the residence time and concentration have been related to the settling curve, the designer again applies the basic principles of free settling to determine the overall dimensions for the thickener. These laboratory testing procedures are detailed in References 8 and 12.

Class 4: Compression Settling

The final settling mechanism involves compaction of the settled solids. This phenomenon is dependent upon the retention time and on the compression depth of both the solids layer and the liquid above it. The compression is resisted by each layer of solids, which prevents the water held within the compression area from escaping. In order to break up the different layers of solids in the compression zone, the designer may install mechanisms for slowly stirring the settled mass. As was shown in Figure 30, the rate of compression is very slow as compared to the other sedimentation processes. For this reason, compression of solids by gravity settling may become uneconomical, since the size of the sediment eventually becomes prohibitive. In most

cases, compression will be rejected in favor of other methods for further concentrating the sludge.

FACTORS AFFECTING SEDIMENTATION EFFICIENCIES

In addition to determining the settling characteristics of the wastewater and using various scale-up and design factors for applying laboratory data to plant practice, it is also important to consider factors that alter the settling efficiency obtained under quiescent laboratory conditions. These considerations include short circuiting, turbulence, distortion patterns, and scour velocity, discussed in detail in Reference 14.

SEDIMENTATION EQUIPMENT

The two basic functions of sedimentation hardware are clarification (obtaining a clear overflow) and thickening (concentrating the solids underflow).

Sedimentation equipment contains four zones as shown in Figure 32: (1) the inlet zone, which distributes the suspension over the cross sectional area of the basin; (2) the effective-settling zone, where the majority of the settling occurs; (3) the solids removal or sludge zone, where the solids are stored; and (4) the outlet zone, where the clarified wastewater is collected and discharged. In each of these zones, fluid patterns develop, and it is these flow effects that must be controlled for effective removal of solids. Figure 33 shows theoretical settling areas for circular and rectangular basins.

Suspended solids gravity-settling equipment can assume a variety of shapes, sizes, and designs. Again, the specific design of the equipment and the selection of hardware

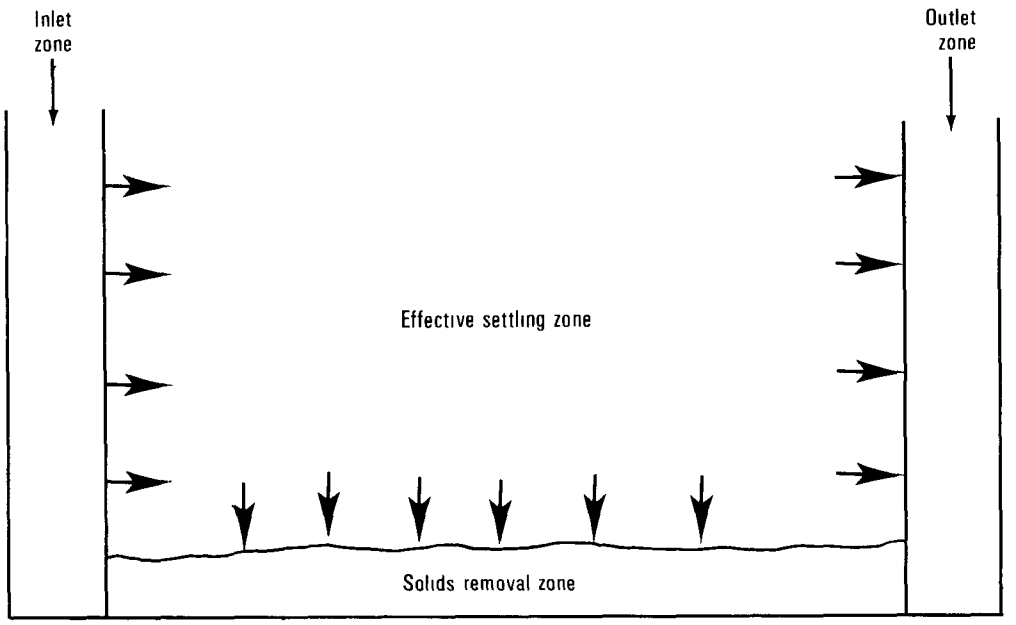

Figure 32. Four Zones of a Sedimentation Basin

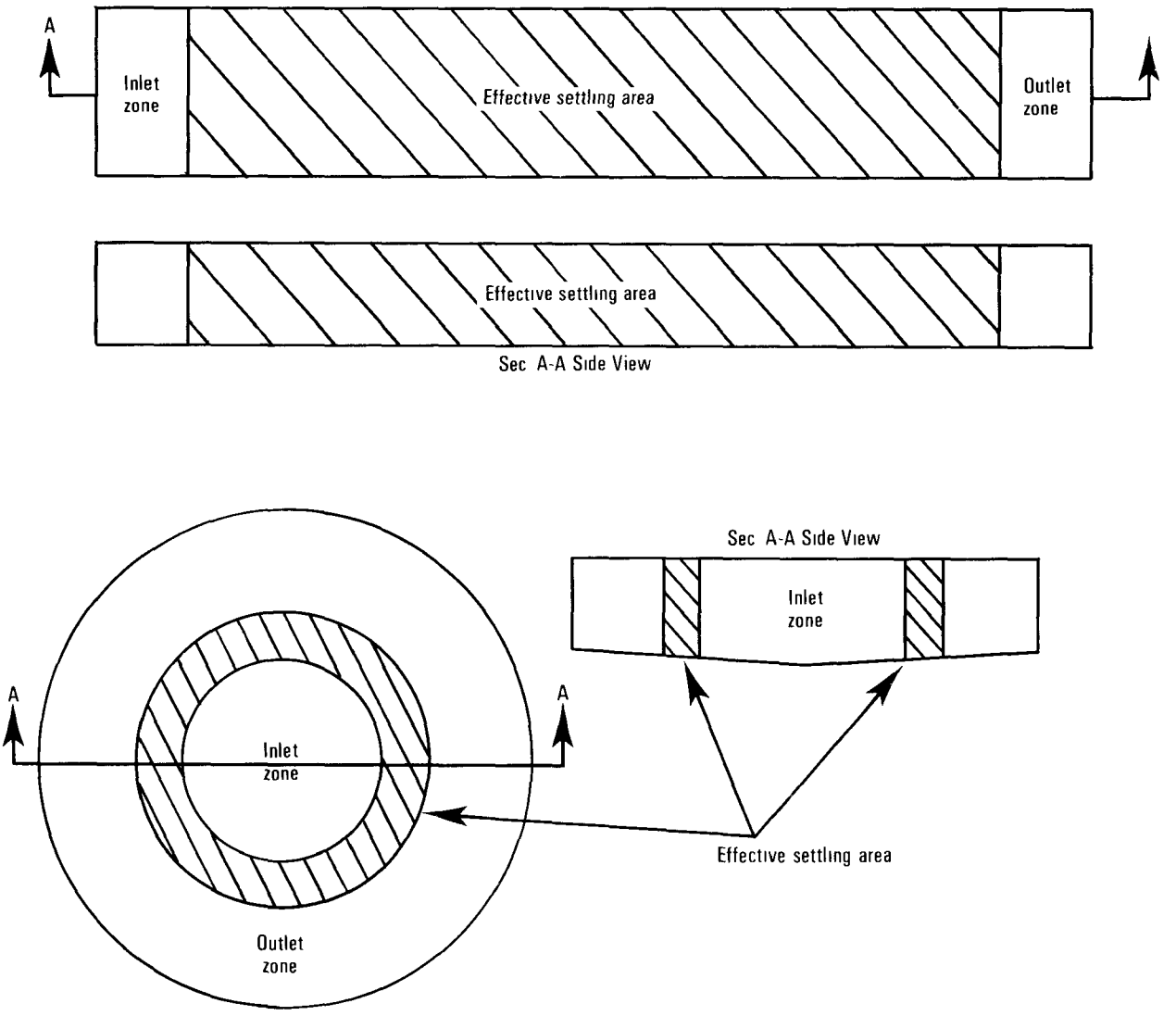

Figure 33. Effective Settling Area for Circular and Rectangular Basins

must be based on laboratory tests of each plant's waste stream and the application of design scale-up factors by experienced designers. Generally, sedimentation equipment will include chemical mixers, flocculators, and a gravity settler. Class 1, or free-particle settling, will normally include only the gravity settler, although free-particle settling is usually not encountered except in grit removal.

This section will discuss the types of sedimentation equipment that include the chemical-mixing and flocculation hardware as integral parts. Two general types will be covered: units with circular and rectangular basins, and tubular and plate high-rate settling devices.

Sedimentation Basins

As noted, the sedimentation basin is divided into four zones: inlet, outlet, settling, and sludge storage. The inlet zone must dissipate the velocity of the feed and provide a uniform distribution of the flow into the settling zone without excessive turbulence. The outlet zone is less critical to performance, but low-approach velocities to effluent weirs must be maintained for maximum sedimentation efficiency.

The rectangular basin shown in Figure 31 illustrates a situation in which a perfect inlet distribution of discrete particles occurs, with no particle interaction and no resuspension of particles from the sludge. In practice, uniform flow has proved unattainable in large tanks because of the complexities of each sedimentation phase and the variance from ideal conditions.

The sludge zone serves the dual purpose of retaining the solids so that a minimum of resuspension occurs and providing sufficient time for thickening.

The main factor in basin design is the overflow rate, expressed by dividing the flow (gal/day) by the surface area (ft^2) of the basin. The graph in Figure 34 relates daily flow, surface area, and overflow rate for a rectangular sedimentation basin.

Although removal rates from basins will vary, there is generally a straight-line inverse relationship between overflow rate and suspended solids removal. As the overflow increases, the solids removal decreases.

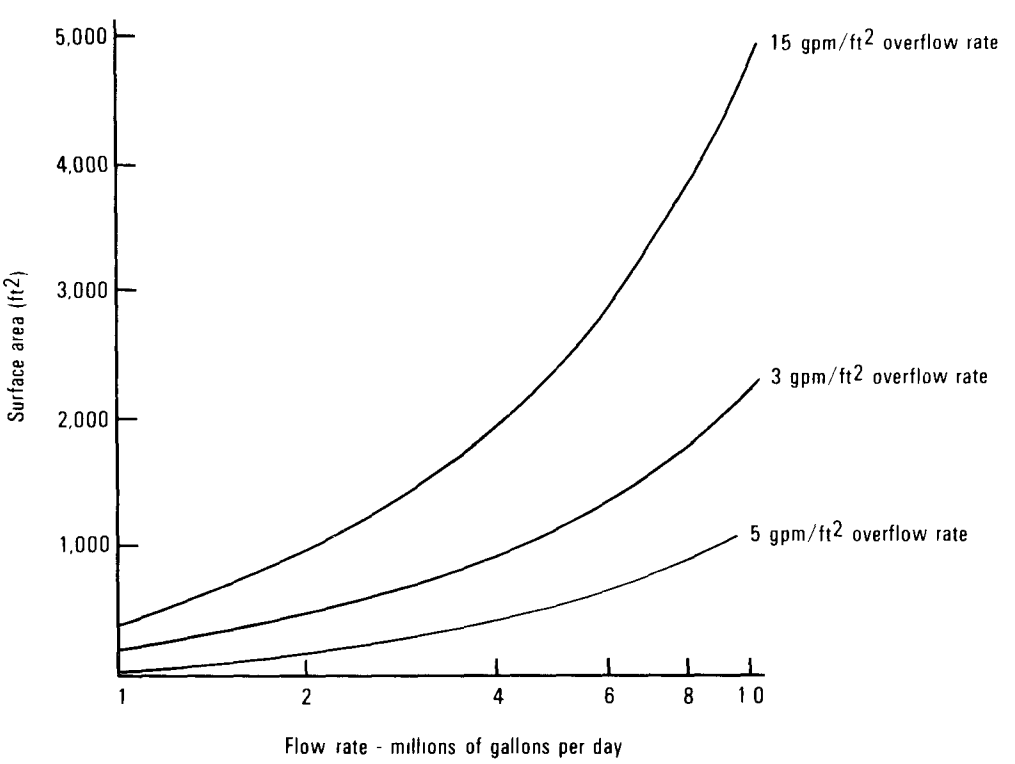

Figure 34. Relation of Overflow Rates to Surface Area and Flow Rate for Rectangular Basins

Center-Feed Circular Clarifiers

In center-feed basin clarifiers (Figure 35), the influent flows up a central column and enters a feed well where the inlet velocity head is dissipated and the flow equally distributed. The flow out of the well is downward into the basin. Gravity separation occurs in the settling zone due to differences in specific gravities and densities between the wastes and the water. Additional flocculation of the pretreated wastestream occurs in the feed inlet and settling zones due to flow patterns. Solids settle to the bottom of the basin to form the sludge, while clear effluent flows over a weir around the circumference of the tank. Figure 36-a illustrates flow patterns in the center-feed clarifier.

Continuous sludge removal is carried out by equipment supported on beams spanning the tank. The sludge is moved to the center of the basin by rotating arms, equipped with scrapers and usually adjustable to any bottom slope. (Lightweight sludges may use suction mechanisms on the arms for removal.)

Peripheral-Feed Circular Clarifiers

Figure 36-b illustrates the flow pattern of peripheral-feed clarifiers. Nozzles or orifices are arranged around the inner wall of the basin to distribute the influent flow evenly. Their operation and configuration is similar to the center-feed types.

Many clarifiers are capable of combining the processes of mixing, flocculation, solids separation, and sludge removal in a single unit (Figure 37). Chambers added

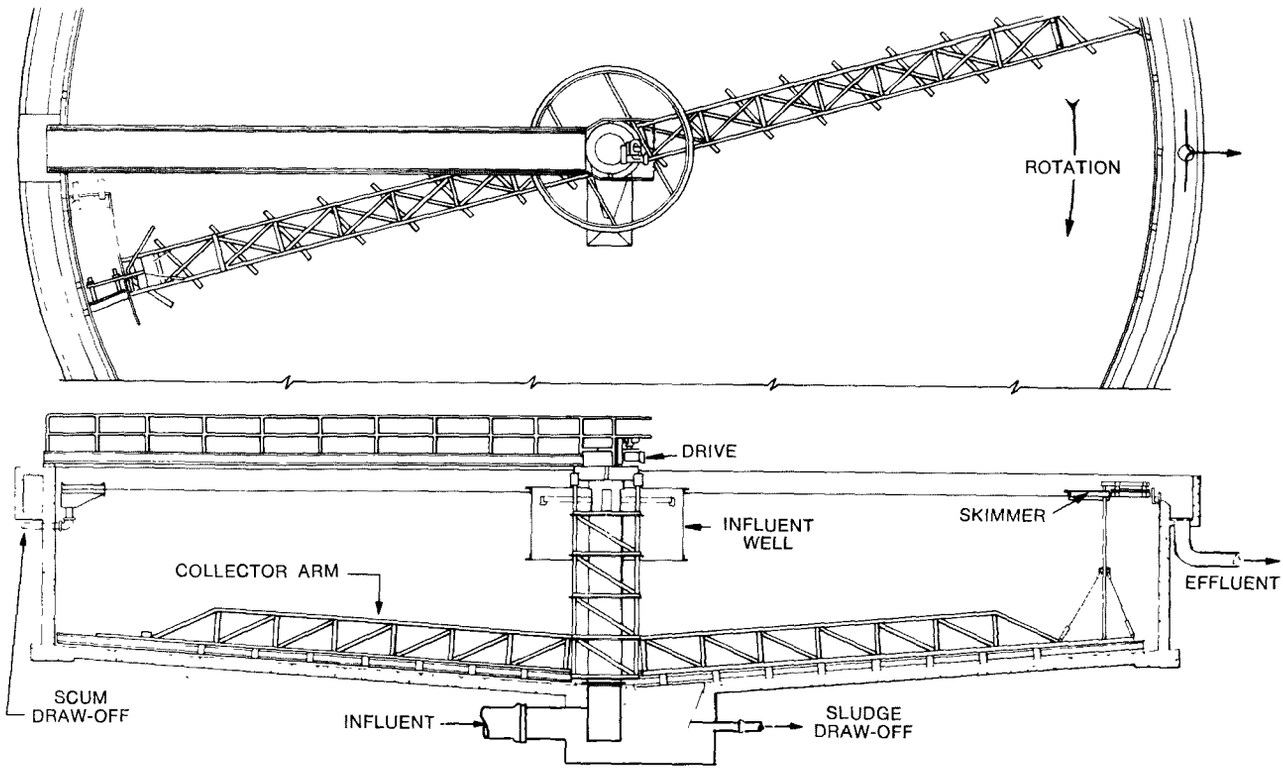

Figure 35. Center-Feed Circular Clarifier

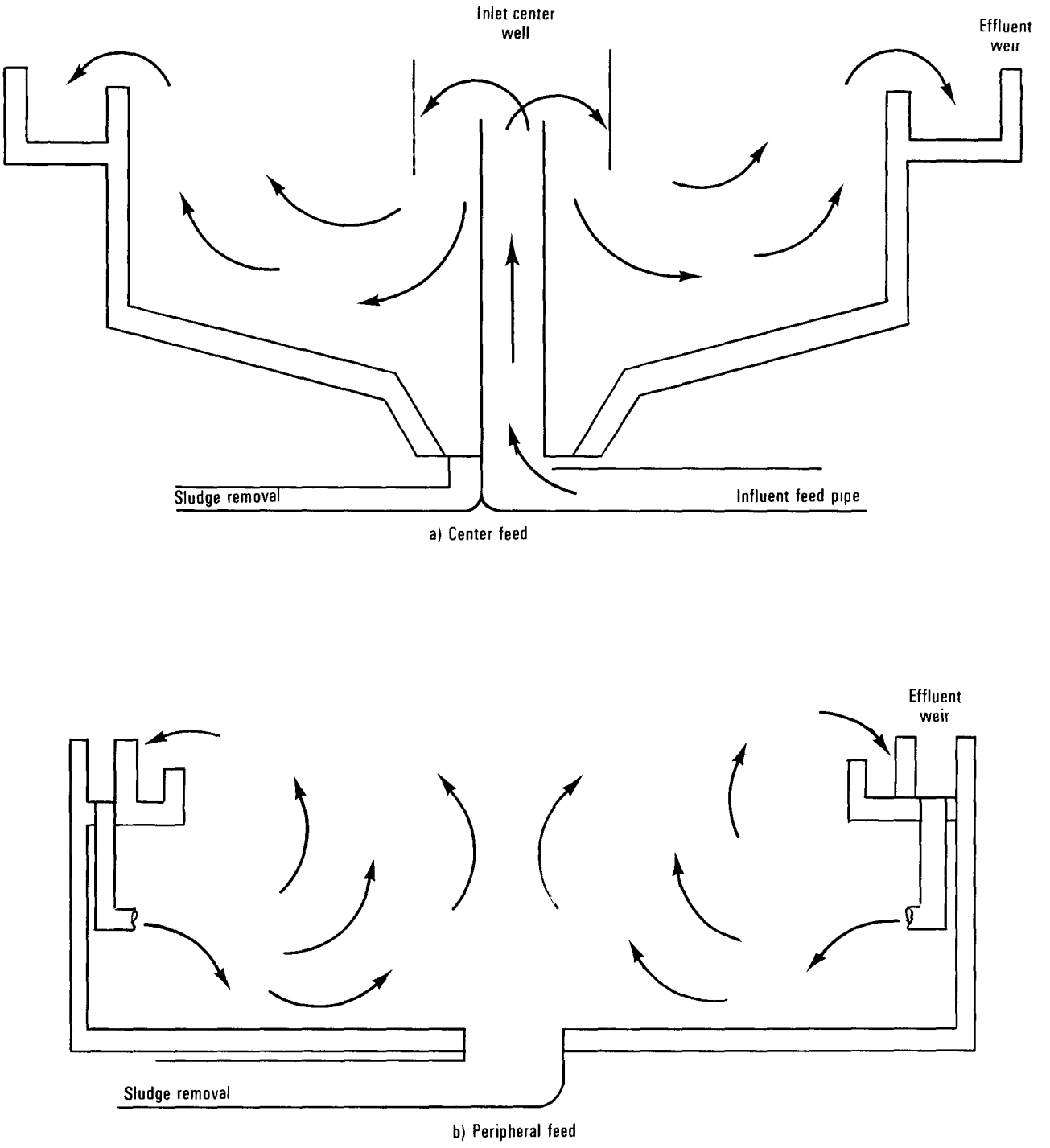

Figure 36. Circular Basin Flow Patterns

to the basin increase reaction among the chemicals and suspended solids. The influent enters a central draft tube, where it is mixed with treatment chemicals. Sludge and raw water rise through the tube and are discharged to the flocculation compartment. Most of the water and suspended solids enter the lower end of the draft to be recirculated, while part of the water enters the clarified water area. Sludge is removed as in other clarifier systems.

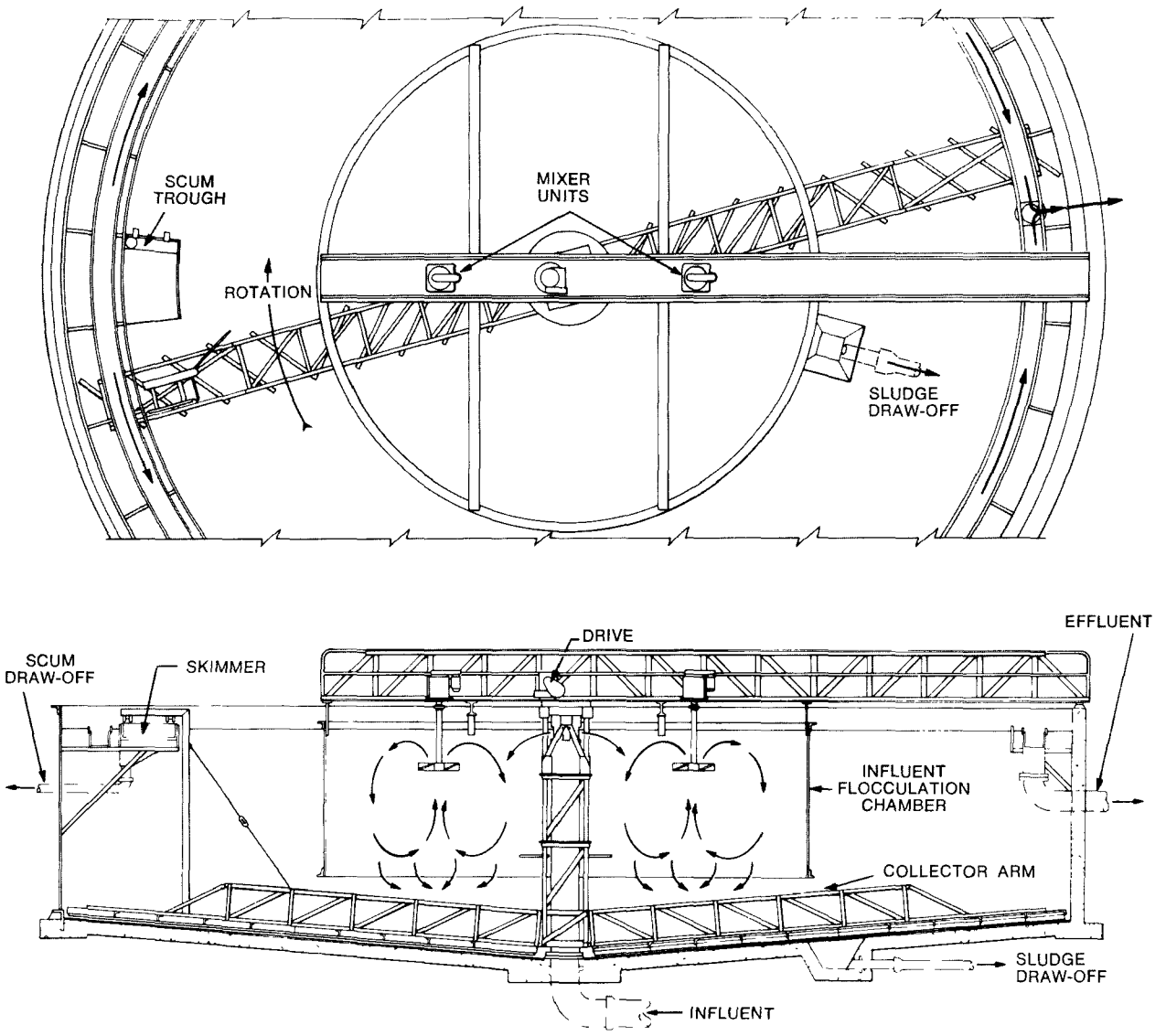

Figure 37. Combination of Processes within a Clarifier

Rectangular Basins

Rectangular clarifiers depend on a straight flow pattern to increase flocculation and lessen retention time. Most basins are designed with a standard length-to-width ratio of 3:1 or greater, which provides a larger effective settling zone and more closely resembles the idealized settling basin. Figure 38 illustrates a common rectangular clarifier.

Sludge removal is accomplished in approximately the same way in both circular and rectangular clarifiers; however, the rectangular basin employs a slowly moving "bridge" spanning the basin, with submerged scrapers to push the sludge to a collection end. Reversing the direction of the bridge can cause reentrainment of the sludge; to avoid this, some rectangular basins use an endless conveyor with cross pieces, or flights, extending the width of the tank to move the sludge. Rectangular basins are generally more expensive than circular basins.

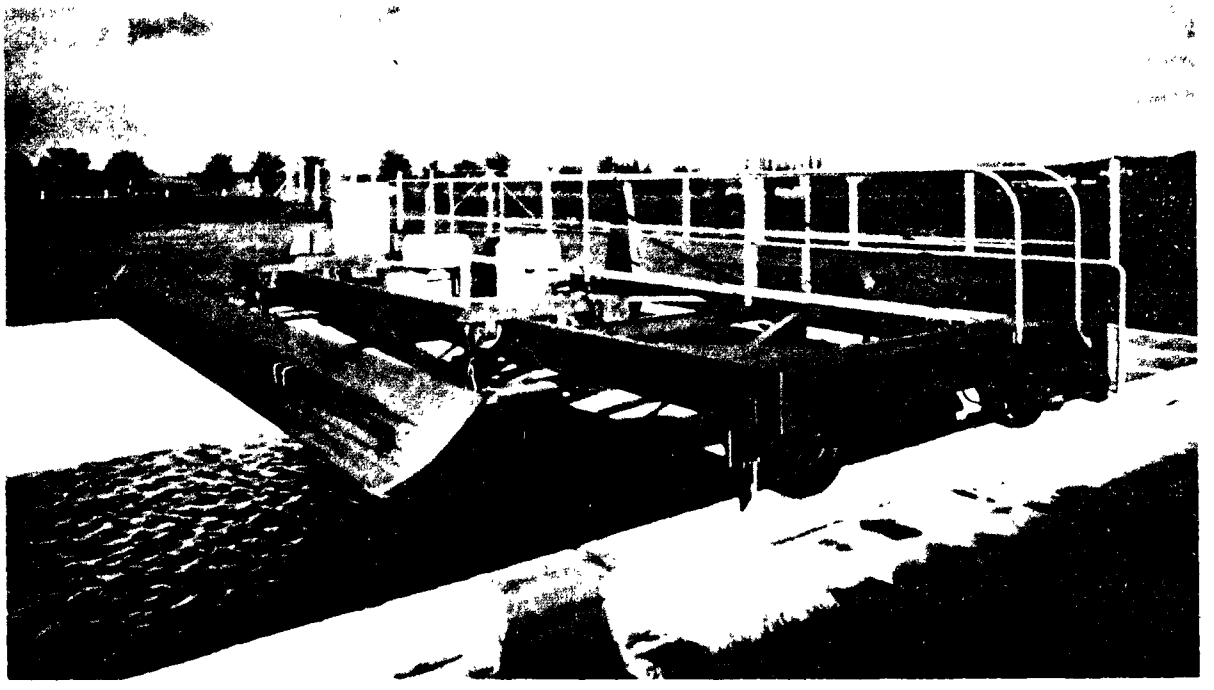

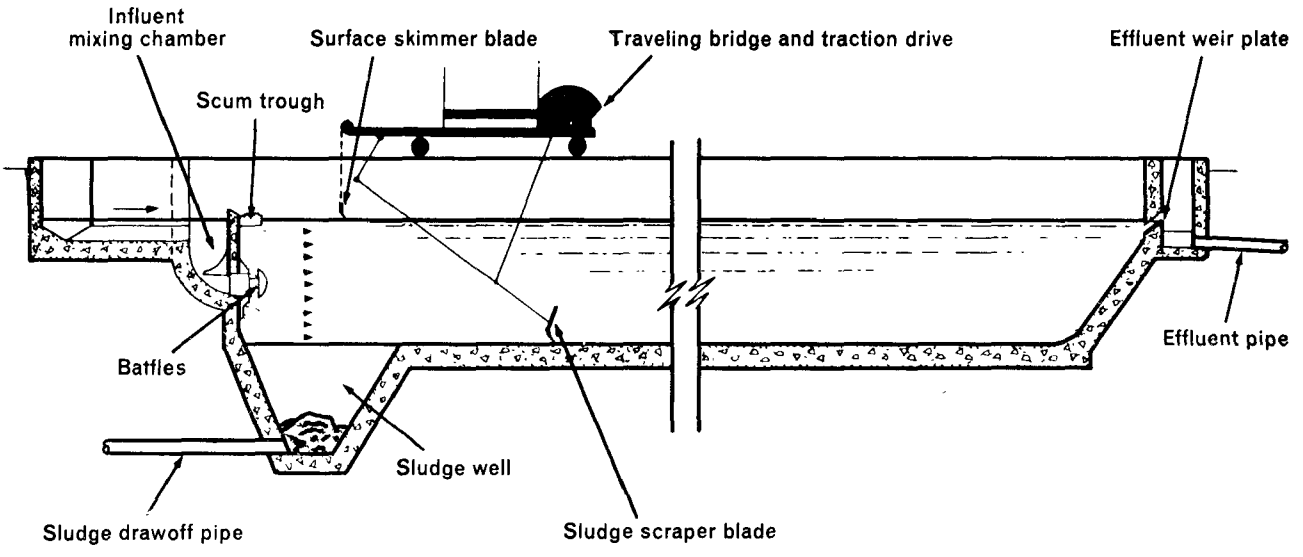

Figure 38. Rectangular Clarifier Basin

Thickeners

Sludge volumes generated in the clarifiers are usually less than 1 percent of the total flow, and solids concentrations are often only 2-5 percent, depending on the waste stream. Therefore, thickeners are commonly used to increase solids concentration. The equipment is very similar to the clarifiers.

A continuous gravity thickener is normally circular, consisting of two truss-type steel scraper arms mounted on a hollow shaft. A truss-type bridge is fastened to the tank walls, or in some cases to steel columns that span the tank and support the entire mechanism.

Often, the thickener is incorporated into the clarifier by enlarging the sludge zone, as in Figure 39. The settled solids are very gently agitated by a moving rake, which dislodges gas bubbles, keeps the sludge moving toward the center well, and aids compaction. The thickened solids are removed at the center well.

Two of the most important design criteria for a thickener are the solids concentration and the volume for the solids storage area. This volume is calculated by determining the retention time necessary for the desired buildup of solids. To calculate the residence time, the solids-volume ratio is determined as the volume of the thickened solids (dependent upon concentration and density) in the basin divided by the daily volume of thickened solids pumped from the thickener. This relationship is expressed in units of days and is used as a measure of the average retention time of thickened solids.

In some cases, sludge thickening may simply involve pumping the sludge from the clarifier to an appropriate holding tank where, after further detention and compaction, residual water can be decanted and the sludge removed.

HIGH-RATE SETTLERS (CLARIFIERS)

A particle is settled out of solution when it touches the bottom of the settler. The shorter the distance it must travel (excluding wind factors, scouring velocities, etc.), the better.

However, the basin settlers need significant depth to eliminate or retard turbulence effects and to reduce velocities that cause reentrainment. High-rate settlers have recently been developed to reduce this distance, significantly cutting the time it takes a particle to reach the settling surface. The types of high-rate settlers used in

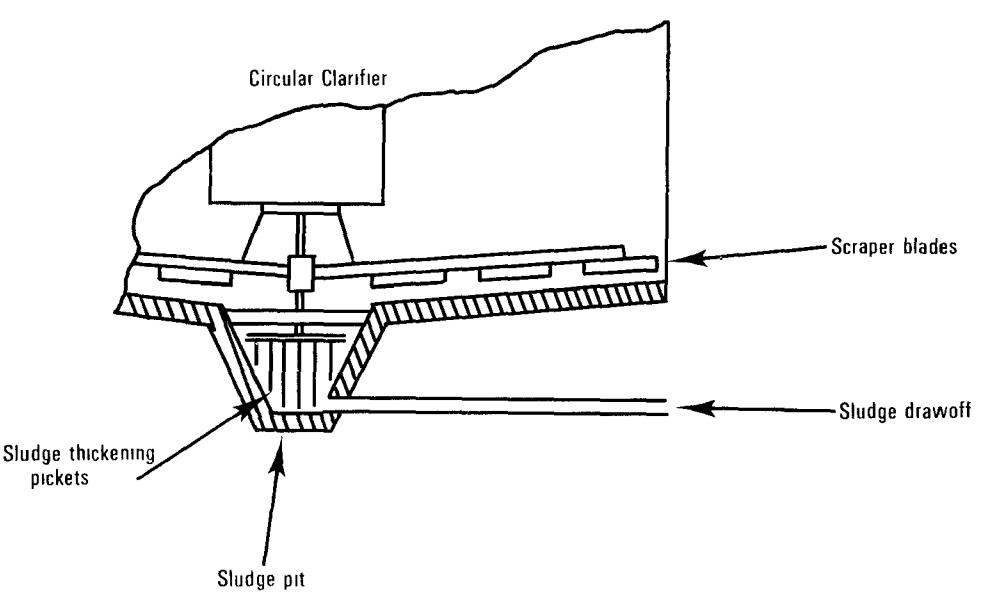

Figure 39. Clarifier with Enlarged Sludge Zone for Thickening

wastewater treatment are tube and plate settlers. They are noted not only for their increased settling speed, but also for overall compactness. Their disadvantages are related to their construction materials; solids may sometimes stick on the settling surfaces. Therefore, high-rate settlers must be evaluated in terms of the solids properties and the consistency of the stream.

Tube Settlers

In the tube-settler system, wastewater is clarified by sedimentation as it moves upward from an entry point through modules of small, steeply inclined (45°-60°) tubes and into a collection area. Solids settle on the bottom of the tubes, slide downward, and exit at the end of the tubes (Figure 40).

Tube and plate settlers are highly adaptable to sedimentation processes because they increase the solids-settling surface and reduce the settling distance from more than 6 ft, normal in a conventional basin, to 1-2 inches.

A standard tube module may be constructed of 2 x 2 in. channels, 30 in. wide, 20 in. deep, and 10 ft long (actual dimensions must be determined by laborating settling tests). Such a module provides 300 ft^2 of settling area and creates a water surface area of only 25 ft^2.

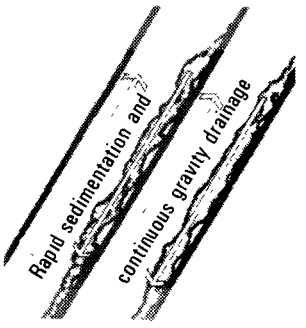

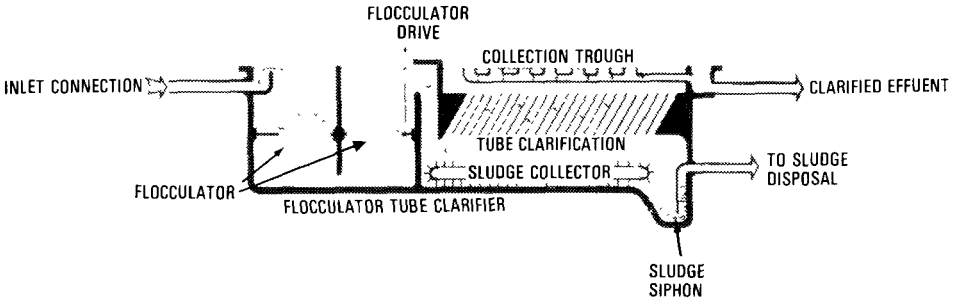

Figure 40. Tube Settler

Plate Settlers

Utilizing a similar principle, plate separators, shown in Figure 41, have a series of parallel, inclined plates. In this system, the effective settling area becomes the area of each plate projected on a horizontal surface, approximately 10 ft^2 of settling area is available for each ft^2 of floor space taken by a 1 ft^2, 10-plate unit.

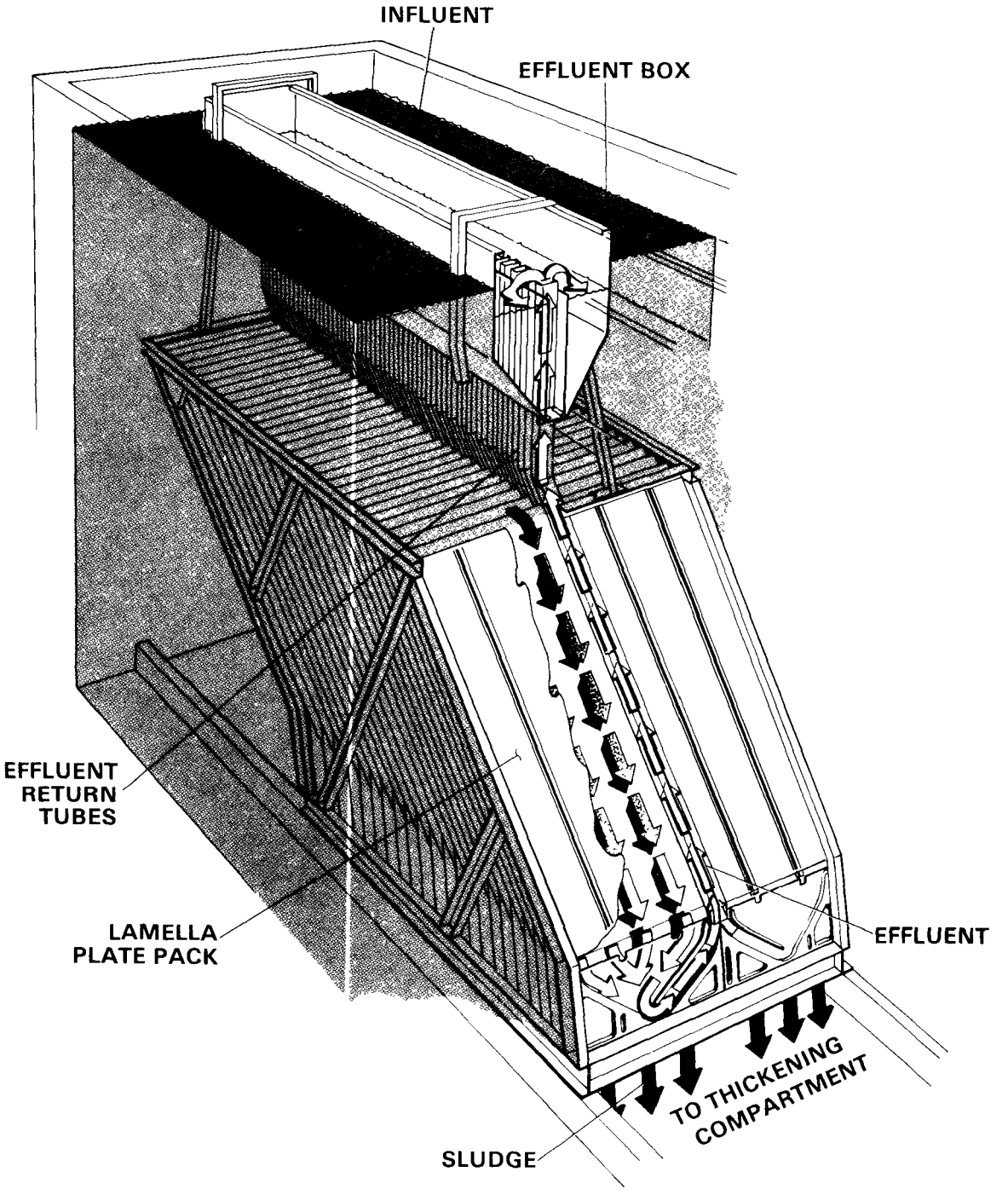

Figure 41. Plate Separator

The waste stream is introduced into the feed box of the separator and distributed evenly onto the plates through nozzles on the side. The flow proceeds upward and exits at the top of the separator, while the solids settle onto the plate surfaces and slide down into a sludge hopper for removal.

Unlike the tube-settler process, the solids do not have to settle through the feed flow. Typical plate modules consist of perhaps 10-100 plates, 4 ft wide and 3 ft long, spaced 6-12 in. apart and inclined at 25°-40° angles. (Precise dimensions are set, as for other equipment, by laboratory settling tests on the waste stream.)

Several manufacturers have provided solids-thickening equipment with tube and plate settlers. This is usually an additional chamber, or hopper, beneath the tube or plate module. The chamber contains a rotating set of pickets (Figure 42) to gently stir the solids, opening channels for water to escape in much the same manner as in a basin thickener. Settlers lacking such equipment must be used with conventional thickeners for maximum solids thickening.

Aside from weight, flow, size, and space advantages, tube and plate settlers have fewer moving parts, meaning further reductions in initial and maintenance costs. Any

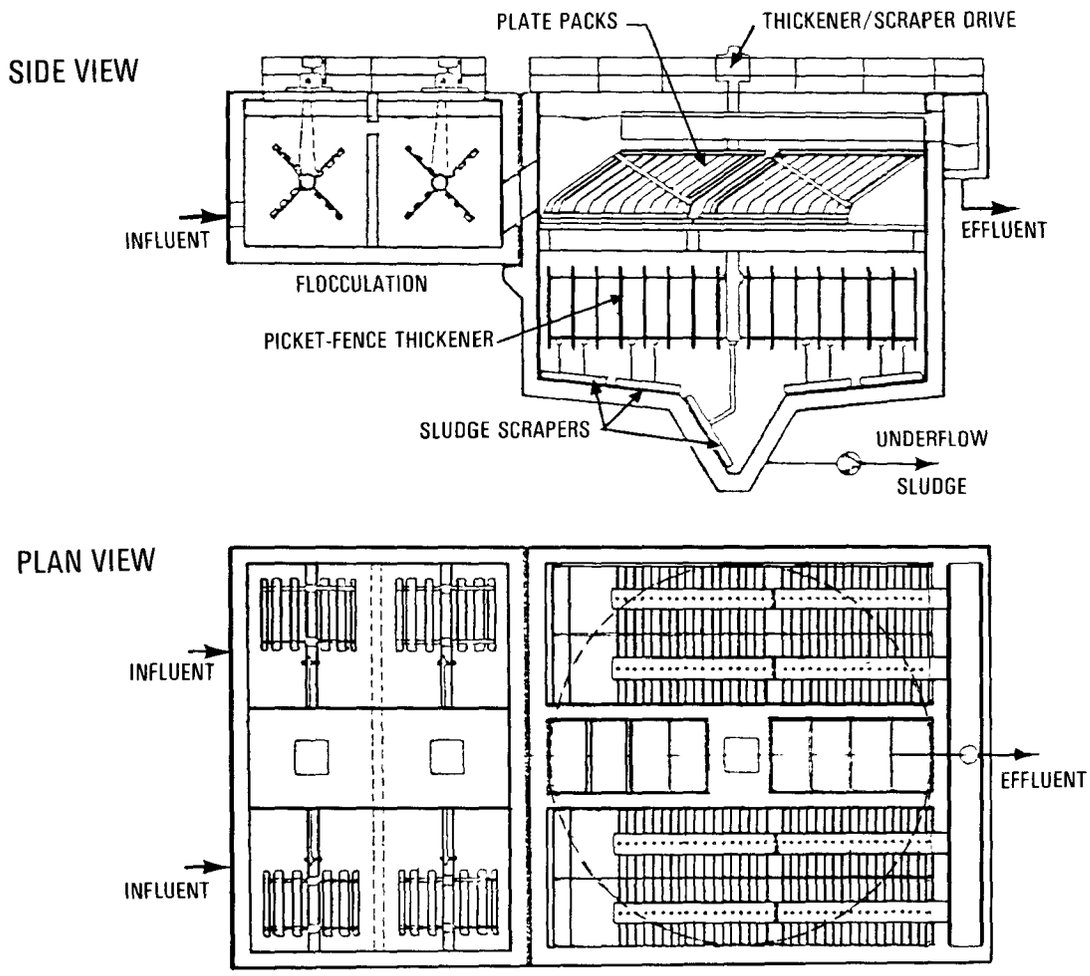

Figure 42. Thickening Equipment on Plate Settlers

systems external to a clarifier, such as chemical feed equipment, stirring mechanisms, and solid pumps, add to overall costs and affect the reliability and maintenance of the treatment process. Generally, it has been estimated that conventional settling systems cost approximately $\$19/ft^2$ of effective settling area, while tube and plate settlers cost about $\$11/ft^2$. However, these settlers have difficulty handling corrosive liquids or sticky solids, which may plug the unit.

COSTS

The wide variation in the waste streams of the metals machining, fabricating, and coating industries makes it impossible to compile a universal cost list of sedimentation equipment. Apart from material and labor expenses, the cost for equipment such as clarifiers depends largely on individual wastewater composition. The interdependence of such factors as settling velocities, overflow rates, coagulant dosage, and final effluent quality regulate the treatment system design.

While only laboratory testing will yield data on these parameters for a detailed economic evaluation, we can cite approximate costs for sedimentation equipment based on the size of the flow and desired overflow rate. Figure 43 shows approximate installed costs for circular clarifiers; costs for rectangular clarifiers will be slightly higher. The internal mechanisms referred to in the figure include skimmers, scrapers, sludge collection mechanisms and draw-offs, and supports and walkways. Items such as land, buildings, or chemical feed equipment are not included.

Figure 44 gives estimates on total installed costs for tube or plate settlers. It is difficult to pinpoint functions by which the costs of this equipment vary, as variations depend a great deal on the materials of construction. Also, the equipment is often modular (which helps keep construction costs down), assembled to the purchaser's requirements.

FILTRATION

Gravity settling, as the least expensive method for removing suspended solids, should be the first one investigated. In some cases, however, gravity-settling techniques will not remove suspended solids to the level required on an NPDES permit or for reuse within the process. In this case, filtration must be considered.

There are two types of filters generally used in wastewater treatment: sand filters and mixed-media filters. In both types, surface charges on the fine particles will have the same adverse effect on performance as in gravity settlers. Highly colloidal matter with surface charges will eventually charge the filter medium itself, setting up repellant forces that prevent adsorption or adherence of later particles. Before investing in the relatively high cost of a filter, therefore, make sure that the wastewater's destabilization phenomenon has been fully investigated. A filter is not the solution to poor solids/liquids separation resulting from particles that cannot be adequately destabilized by coagulation.

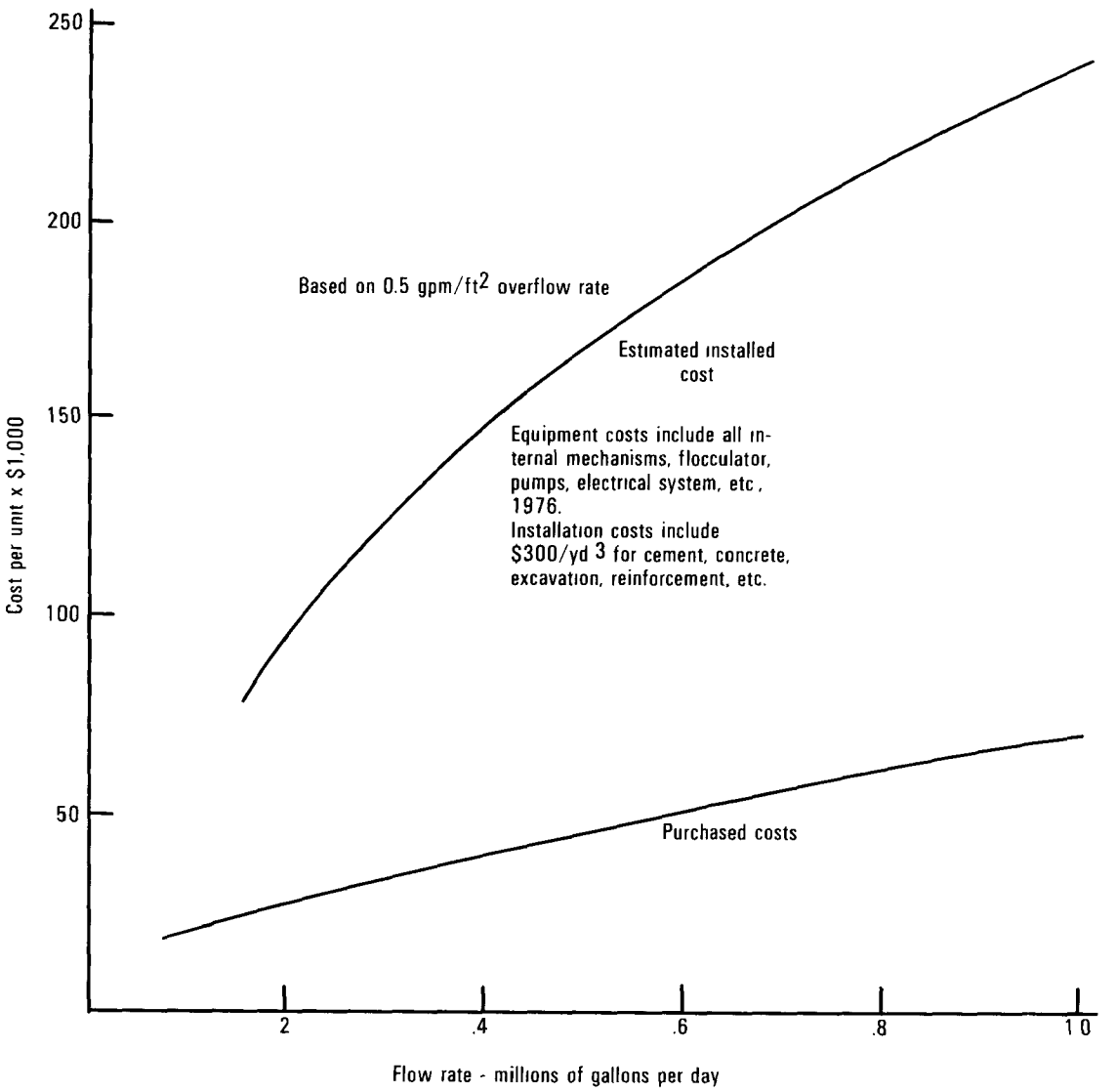

Figure 43. Approximate Costs for Circular Basin Clarification Equipment

SAND FILTERS

Figure 45-a shows a conventional sand filter. The filtration basically occurs on the surface, which eventually becomes saturated with particles. When this occurs, the pressure drop across the filter increases and the filter must be backwashed to be made operable again. Backwashing involves a sequence of reverse water flow combined with what is called a surface scour, which essentially means that jets of water are directed at the filter surface to break up the compacted material. The backwash cycle—that is, the need to minimize it—is a major factor in determining the size (and initial cost) of a filter. Therefore, filters should normally be used only for "polishing" operations, with the bulk of the suspended solids removed prior to filtering.

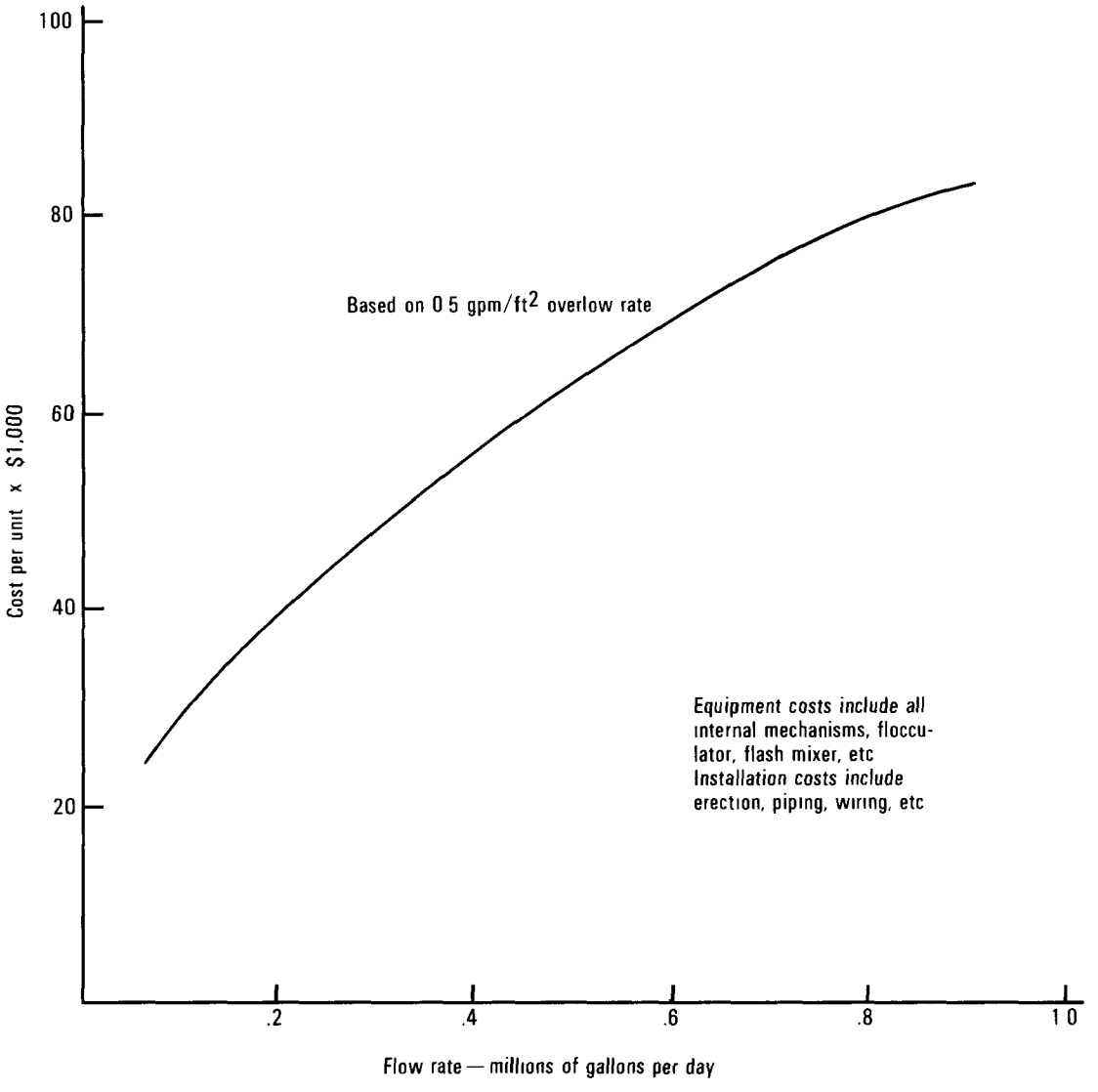

Figure 44. Installed Costs for Tube or Plate Clarification Equipment

MIXED-MEDIA FILTERS

Figure 45-b shows a single-media filter bed. In contrast, the mixed-media filter bed in Figure 45-c, in which the size of the filtering media is varied so that bulk of the filtration occurs deep in the bed, allows a far more effective use of surface area; it also increases the time between backwashes. Even with the mixed-media filter, however, presettling is necessary to avoid overloading of solids.

The amount of solids in the effluent from a filter is a function of the influent solids, the properties of the filter, and the degree of stabilization in the suspended solids. References 8 and 12 provide general background on the use of wastewater filters. If further treatment is needed to meet final limits for suspended solids at your plant, you should carefully consider further flow reductions before adding a filtration step.

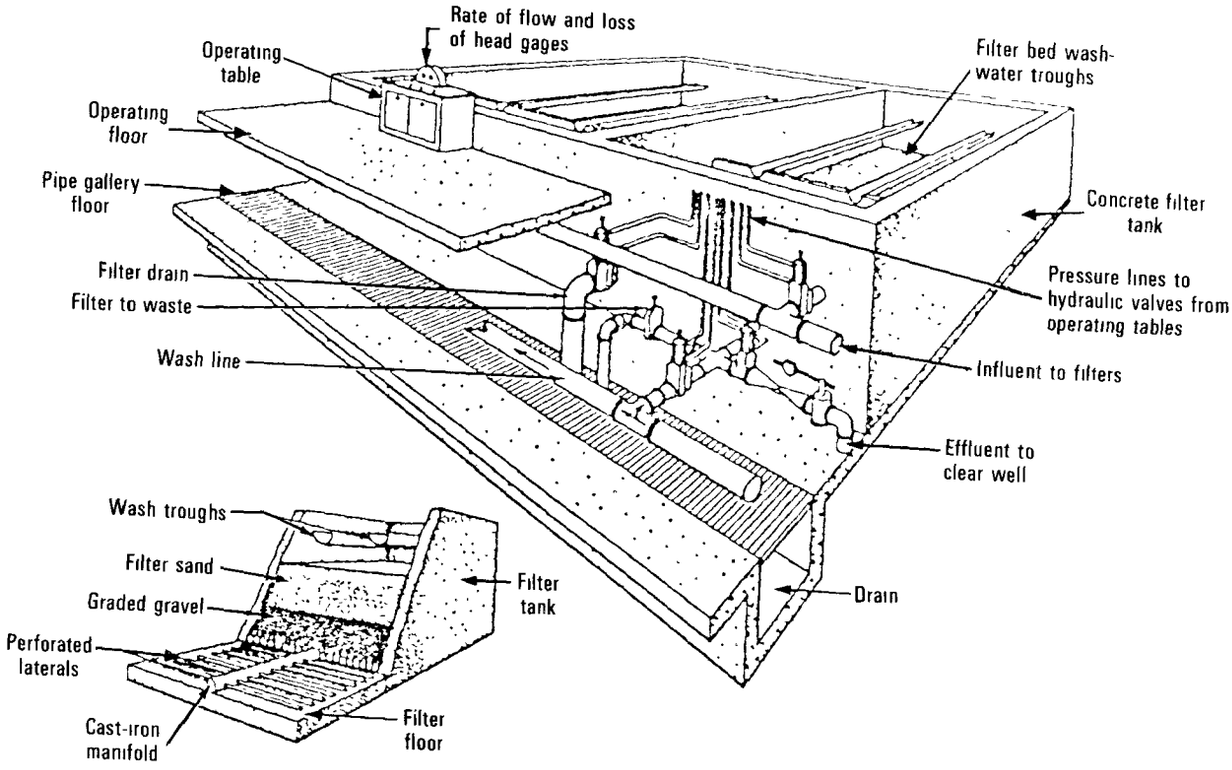

a

typical sand filter

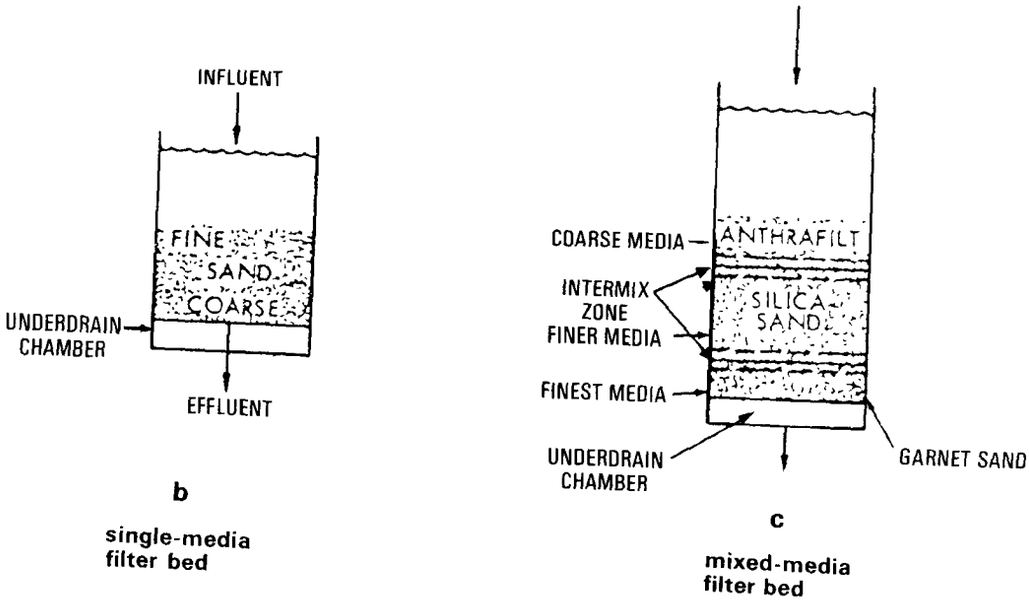

b

single-media filter bed

c

mixed-media filter bed

Figure 45. Filters

FURTHER SOLIDS CONCENTRATION

The sludge from a conventional clarifier will normally contain only 1-3 percent solids. A thickener can raise the solids content to 5-10 percent, based upon the solids-settling and compaction properties. However, in most cases it is neither economical nor feasible to use gravity-settling equipment with the high residence time needed to achieve this thickness. To reach a higher solids concentration by other means, you must either use extra force, such as vacuum or centrifugal, or allow a very long compaction time. Time-induced compaction is possible with sludge lagoons. In most cases, the least expensive method for solids disposal is to find a nearby disposal site (sludge pond), preferably on the plant grounds. The watery solids, if allowed to stand for months, will eventually compact. The liquid overflow may be high enough in other pollutants to require routing back to the treatment plant. Thus, it is essential to locate the sludge pond in an area where excessive rainfall will not carry the solids into a waterway.

One method of solids disposal is contract hauling. Since waste solids contain significant amounts of water, and contract haulers charge by the pound, the costs for disposal will be largely based on the weight of the water. If contract hauling is required and there is no land for a pond, further concentrating of solids in the plant by dewatering methods may become attractive. The two generally accepted mechanical approaches are vacuum sludge filtration and centrifugation. The equipment for these methods is expensive and is feasible for small plants only when no space for a pond is available.

As in the case of wastewater systems design, each option for solids concentration must be separately evaluated if the best and most economical system is to be designed for the plant. Factors that must be assessed for each dewatering process will include physical properties of the solids, the current solids concentration, desired final concentration, construction materials, and filtering rates. It is common practice to consult with equipment suppliers or engineering consultants who can predict the performance of a solids concentration system and determine the costs of installation.

VACUUM FILTRATION

Many types of filters are available for dewatering solids. The systems can be operated continuously or as batch operations. The selection of filter type depends primarily on the filtering rate, which is basically the ease with which the water is removed from the solids and the solids cake is formed. One of the most common filters for dewatering is the rotary drum vacuum filter, shown in Figure 46. This filter has three basic operating zones, shown in Figure 47: slurry pick-up, cake drying and formation, and discharge. It is constructed as a cylinder, using common materials such as carbon steel or stainless steel. A series of pipes is located beneath the cylinder to provide suction and remove water from the cake. The drum can be covered with various types of filter media, sized to pick up the solids slurry, to permit the best range of solids removal and cake formation, and to reduce loss of solids into the filtrate.

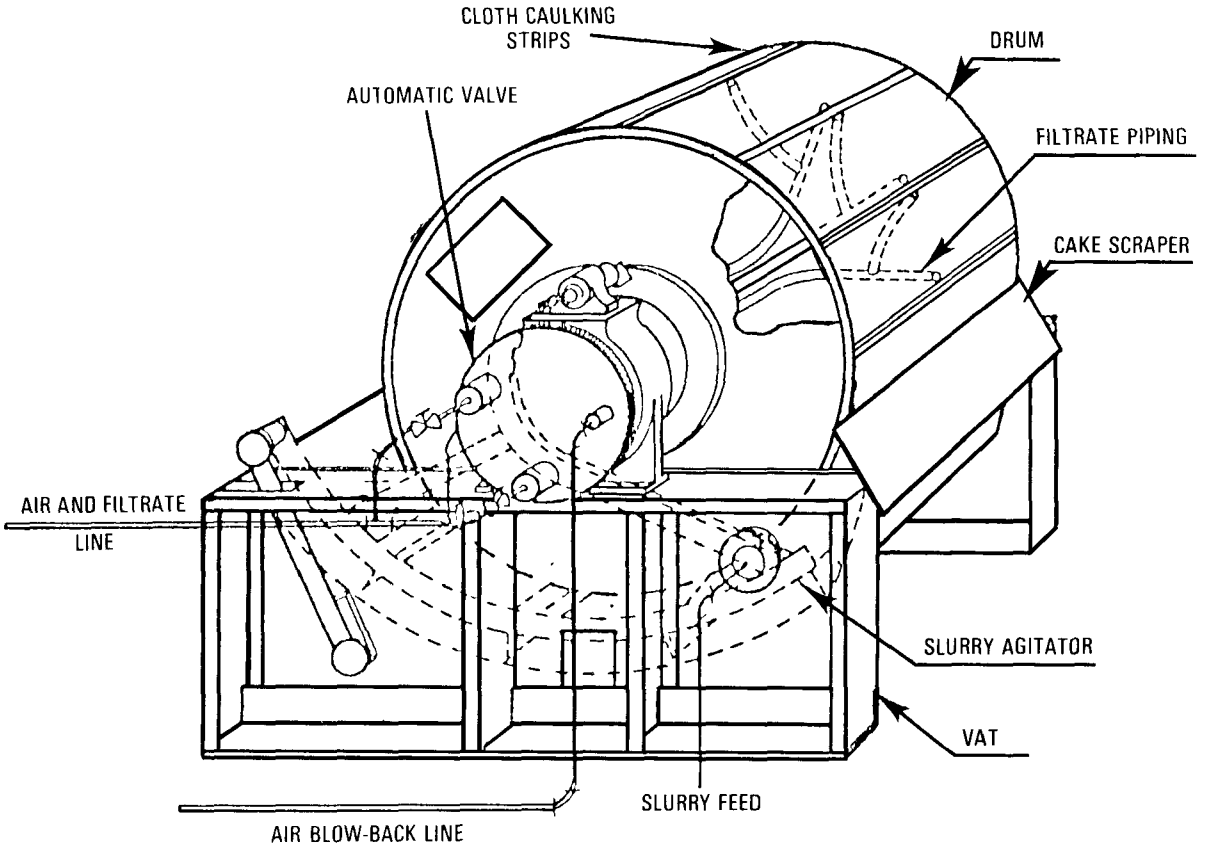

Source: EPA *Process Design Manual for Suspended Solids Removal.*[12]

Figure 46. Rotary Drum Vacuum Filter

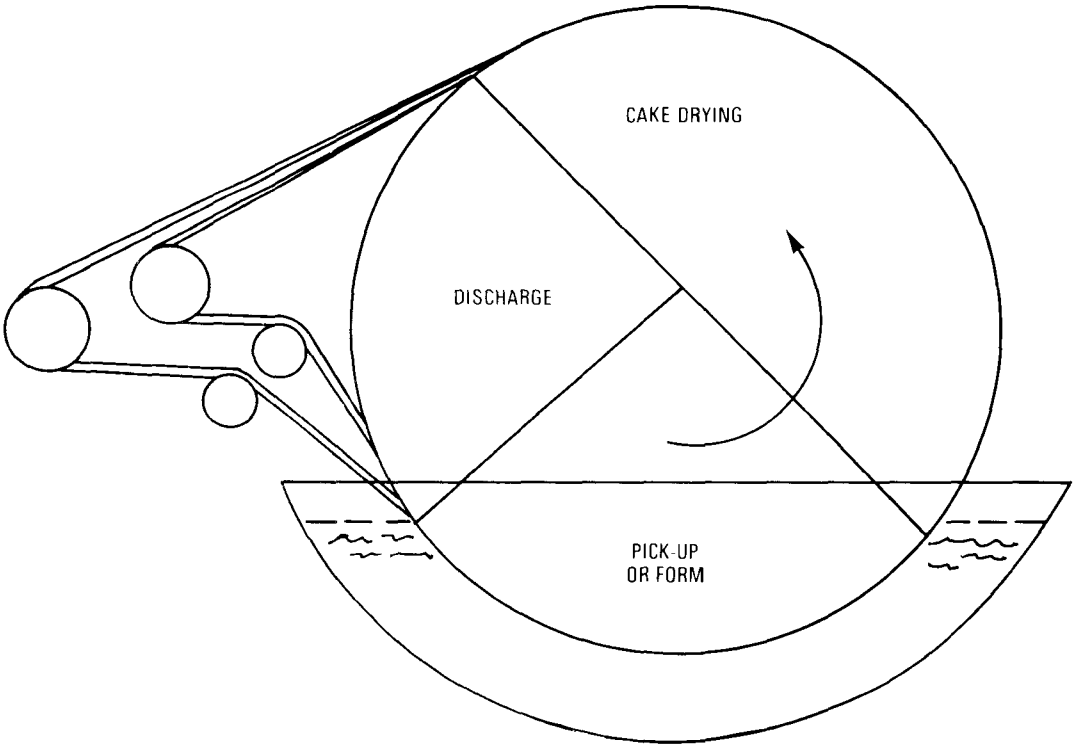

Source: EPA *Process Design Manual for Suspended Solids Removal.*[12]

Figure 47. Operating Zones of a Vacuum Filter

Initially, the slurry is fed from the clarifier or thickener into the submergence tank under the rotating drum, where it is mechanically agitated to keep the solids in suspension. The drum is normally submerged to about 40 percent of its circumference and rotated at a rate that permits the optimum slurry pick-up, cake thickness, and water removal. The slurry is initially picked up on the filter medium by the vacuum exerted through the filter medium and pipes, pulled with a standard-type vacuum pump. As the drum rotates and exits the submergence tank into the drying zone, the water is drawn through the pipes underneath the filter. At this point, the initial drying stage begins and the cake is forming. The cake is further dried by air pulled through it in the last section of the drying zone. The drum continues to rotate to the discharge area, where a scraper and air ejection blow-out remove the solids from the filter medium. The solids are then collected in a hopper and hauled to the disposal site.

Water and air drawn out of the cake into the discharge pipes are subsequently fed into a filtrate receiver, a separating device that removes the air from the water. The receiver is sized to reduce the velocity of the water and air entering the tank for efficient removal of the vapor and liquid. The water is periodically discharged from this vessel with a standard centrifugal pump and is usually recycled back to the clarifier or thickener. The vacuum maintained at the pump is normally in the range of 18-22 in. of mercury vacuum.

The performance of vacuum filters, measured by the pounds of dry solids per-hour/ft^2 of filter medium, varies with the application. However, a cake containing 20- to 40-percent solids, produced at a rate of three to six pounds of dry solids per-hour/ft^2, is common.

CENTRIFUGATION

When the volume of solids to be dewatered is very high, it is normally more economical to use centrifuges than filters. Evaluating a centrifuge for dewatering use is essentially the same as evaluating a filter. A centrifuge will generally be able to achieve higher solids concentration while using less space in the plant. Its disadvantage is greater maintenance due to its rotating bowl.

The force of rotation increases the settling forces on the solid particles to achieve separation efficiencies higher than those obtained with filters. A typical centrifuge is shown in Figure 48. Centrifuges, like filters, may be operated as either batch or continuous operations.

As the feed enters the centrifuge, it is accelerated to the rotational speed of the device and distributed along the bowl. The heavier solids are directed toward the sludge discharge by a screw-conveyor. The liquid flows through the filter screen of the centrifuge wall and is collected on the outside rim, where it flows over a weir to the liquid outlet. The liquid that has been separated from the solids is recycled back to the clarifier or thickener. Solids are discharged into a hopper for disposal.

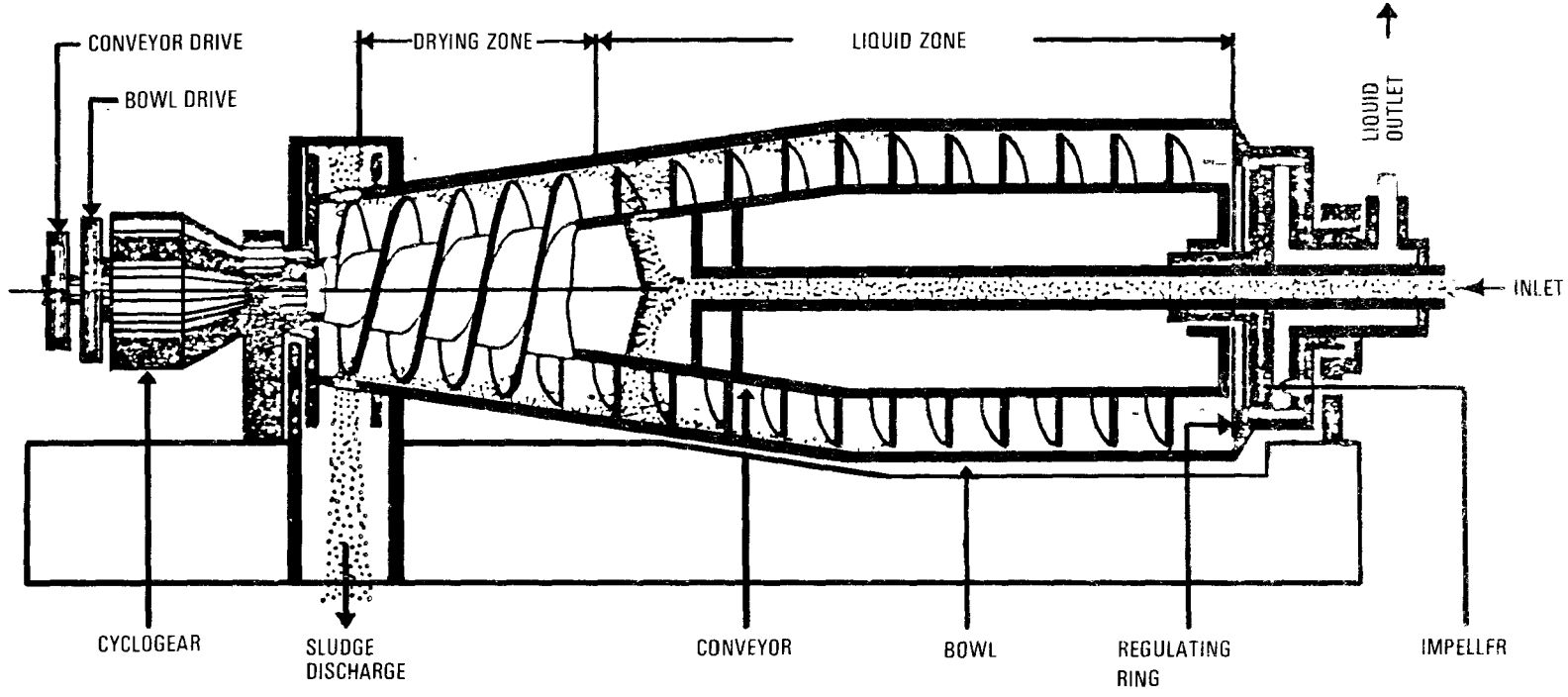

Figure 48. Centrifuge

CHAPTER VI

RESIDUAL OIL AND GREASE

Oil and grease that contaminate water in a separate, distinct phase can be removed by a variety of techniques, selected on the basis of the quantity or physical characteristics of the oil and the desired effluent concentration. Some of this "free" oil can usually be easily separated from water by flotation, skimming, or other gravity-motivated processes (Chapter V). As the oil droplets get smaller or their density approaches that of the wastewater, however, more complex separation technology is required.

Earlier sections have discussed removal of settleable and suspended solids. After these steps, the wastewater may still contain some oil in an emulsified or very finely divided state. This oil, kept in suspension by chemical and physical forces, will not separate from the wastewater even after long periods of standing in a container; removing it requires that the emulsion be broken and the fine oil droplets forced to coalesce into large drops of free oil. Techniques for this are similar to those applied for agglomeration of fine suspended solids.

OIL PROPERTIES AFFECTING REMOVAL

Many factors affect the dispersion of oil droplets in wastewater. Pumping and the presence of emulsifying chemicals are especially important. Pumps with high-shear characteristics can cause formation of fine oil droplets; contaminants such as soaps, detergents, or emulsifying agents tend to affect the complete and nearly permanent dispersion of oil droplets in water.

Oil can be present in a waste stream in three forms:

- Free (insoluble) oil, composed of discrete particles, usually larger than 20 microns, that can rise through the water because of its lower specific gravity;
- Emulsified oil (partially dissolved), in droplets less than one micron that are unable to rise to the surface regardless of detention time; and
- Dissolved oil, having no discrete particles and requiring advanced separation techniques.

Characteristics of oil-water mixtures that should be carefully considered before selecting a process for removing or separating out the oil are particle size, amount of suspended matter, degree of emulsification, and the oil concentration, discussed below.

PARTICLE SIZE

The size of oil particles dispersed in water has a significant bearing on the ease of their removal. Oily waste should be handled in a way that prevents division or dispersion of oil droplets. The finer the oil droplets, the more difficult, and usually more expensive, they are to remove. The size of droplets suitable for a given filtration technique cannot be specified, since droplets often change in both size and shape during processing. The pumps supplied with, or recommended for use with, oil-water separation equipment are frequently of the low-velocity, low-shear type. Low-speed positive-displacement or centrifugal pumps are the most commonly used feed pumps to oil-water separation equipment.

SUSPENDED OR PARTICULATE MATTER

The presence in water of solid particles other than oil may strongly affect oil removal systems or equipment. This is particularly true with separators of the coalescing type (discussed later in this chapter), since solid particles have a tendency to plug the fine pores and passages of coalescing media. The result is that the oil-water mixture is forced through the remaining open pores at a much higher velocity and the effectiveness of the coalescing separation is diminished. In extreme cases, the plugging of a high percentage of the passages results in the almost-complete blockage of oil-water flow through coalescing cartridges.

DEGREE OF EMULSIFICATION

The extent to which oil in water is emulsified depends on particle or droplet size. When oil particles are so small that their dispersion in water is essentially permanent (with internal physical forces keeping them separate), they are said to be emulsified. Oil-water mixtures in this state cannot be separated by the usual gravity, or even coalescing, types of equipment, but only by the most advanced adsorption or filtration techniques.

The presence of soaps, detergents, and other chemical emulsifying agents in water promotes the stable suspension of fine oil droplets. In some cases, these chemicals are added intentionally to maintain emulsified oil, as in the case of water-soluble cutting oils or coolants. In other cases, they are inadvertently added through intermingling of industrial wastes. The active portion of the emulsifying agent attaches itself to the oil particles, giving them a physical-chemical nature that tends to keep them separate from all other particles. The result is a very high-stability system, and no amount of inducing oil droplets or particles to contact each other will result in their agglomeration.

The removal of emulsified oils depends upon first destroying the forces holding the fine oil particles apart and then providing conditions where they can physically combine. This is analogous to the flocculation and agglomeration techniques used in suspended solids removal (Chapter III). Truly emulsified mixtures of oil and water can be treated by some of the adsorptive and advanced ultrafiltration processes. In many cases,

emulsions can be broken by the application of heat, strong acids, or other chemicals that destroy the soap or detergent causing the emulsion. In cases where the emulsion is enhanced by high oil densities, addition of a salt to increase the density of the water will aid separation.

INFLUENT OIL CONCENTRATION

The quantity of oil in the feed to coalescing and filtration oil-water separators can be of significance for oil removal. Some devices have a capability for handling large slugs of oil without difficulty or disruption. Other systems might suffer a serious upset in processing and discharging oil at the proper rate if a high percentage of oil, or a nearly pure slug of it, should enter the equipment. Some equipment is outfitted with automatic oil-unloading devices that discharge water-free oil in direct proportion to the amount of oil entering the equipment.

All of these methods require special technical knowledge and the addition of other materials to the wastewater. It is recommended that these techniques be implemented with the cooperation of an experienced consultant or vendor.

MECHANISMS FOR SEPARATION

COALESCENCE

Coalescence is a process for promoting the agglomeration of small droplets. It works by causing the oil-water mixture to flow in a manner that encourages contact among fine droplets or particles. As might be expected, a normal straight-line flow would have the effect of allowing oil droplets or particles to remain separate. A highly turbulent flow will induce contact between the oil particles, but not in a way that promotes their agglomeration into larger globules. Coalescence is the carefully designed flow of an oil-water mixture through an area requiring many changes of path, forcing the contact of multiple oil droplets; at the same time high turbulence and high velocity are avoided. This promotes the formation of larger globules of oil as the oil-water mixture leaves the coalescing media.

Coalescing filters and similar equipment can normally produce effluents of a quality of 5-10 ppm or less, dependent on the nature of the oil-water mixture. Normally, the gravity separation processes are better able to handle large slugs of oil. Coalescers and filters, while not as well-suited to gross amounts of oil, generally produce a consistently higher quality effluent with low residual oil.

FILTRATION AND ADSORPTION

The classical mechanism of filtration is retention of the unwanted material on one side of a filtration medium. Perhaps the best-known example is bed-type filtration, which uses granules of sand, gravel, anthracite coal, or carbon. In the chemical process industries, filtration is also accomplished through the use of cloth, porous metal plates, and, more recently, even micro-porous plastic sheets or membranes.

In filtration, the passages for water flow are restricted in such a way that larger particules or globules are retained. This mechanism is very consistent when the material to be filtered is discrete particles of sand, clay, or other solids dispersed in water. With oil mixtures in water, the mechanism is less effective but remains similar to that for solids removal: globules or particles of oil larger than the pores of the filter are retained. This separation occurs on the gross-pore scale of standard types of filters as well as on the micro-scale of membrane processes such as ultrafiltration.

In most cases, coalescence and adsorption will be occurring simultaneously with true filtration. Thus, as an oil-water mixture is flowing through beds of particles, droplets are contacting droplets and some coalescence is taking place. Simultaneously, a surface-sticking or adsorption of some of the oil might also occur, as is the case with filter media such as activated carbon. In this instance, the major mechanism is the adherence or adsorption of the oil on the large surface area of the activated carbon granules.

SEPARATION EQUIPMENT

The equipment for oil-water separation by coalescence, filtration, and ultrafiltration processes is discussed below in some detail.

COALESCING SYSTEMS

Coalescing oil-water separators are generally of two major types—extended-surface and cartridge coalescers.

Extended Surface Coalescers

This type of coalescer promotes a tortuous flow of water through the system, forcing oil droplets into intimate contact. These units are typified by plate coalescers and those using packing or other media. Plate or media-packed coalescers operate at atmospheric pressure and often have open-tank construction.

Figure 49 shows a plate separator, a typical extended-surface coalescing separator. The oil-water mixture flows in a turbulence-free manner between the plates. The action of the plates promotes the agglomeration of oil droplets and directs them to a convenient oil off-take port. These separators can handle variable quantities of oil influent, including large slugs of oil. Since they have no moving parts, they generally require low maintenance. Typical effluents contain approximately 10-25 ppm of free oil, although under specific conditions the outlet oil concentration can be lowered to about 5 ppm of free oil.

Another extended-surface coalescer design is based on plastic vertical tubes. The internal mechanism is similar to the API separator mentioned earlier, except that a matrix of plastic tubes is installed in the separation chamber. The tubes are perforated, and when they are stacked vertically, the grid pattern provides an interference path for the oil and other solids. The plastic material attracts the oil globules and

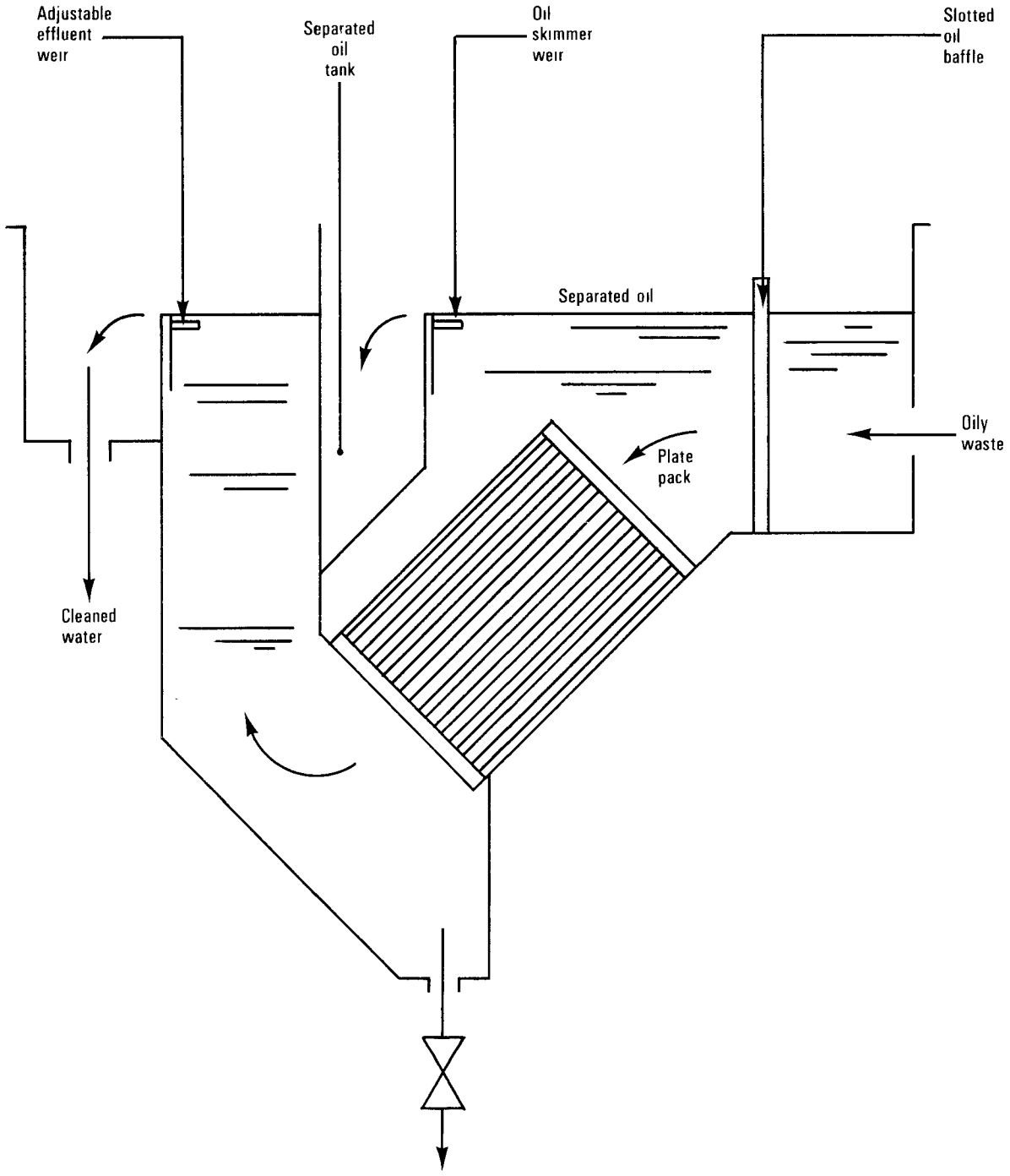

Figure 49. Plate-Type Coalescing Oil-Water Separator

rejects the water; as suspended solids are accumulated on the plastic surface, they agglomerate and drop to the bottom of the separator. The oil globules increase in size and buoyancy until they break away from the plastic tubes and rise. The tubes allow free passage of the oil and sludge in the desired direction.

A similar result is achieved when the surface is in the form of random packing, as shown in Figure 50. The packing can consist of saddles, Pall rings, raschig rings,

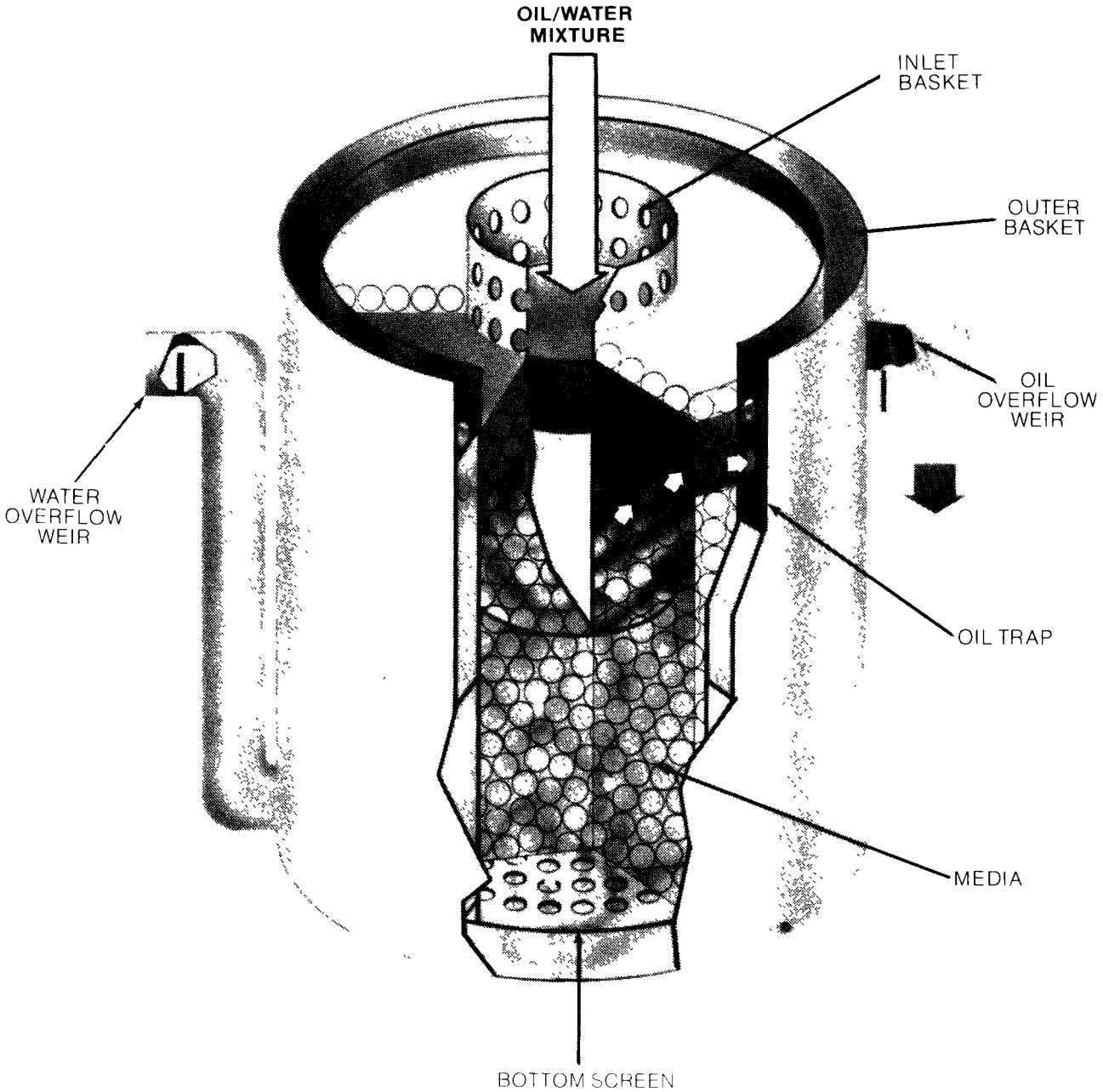

Figure 50. Packed Oil-Water Separators

and other packing media used in the chemical process industries. The oil-water mixture flows slowly through the packing, with intimate contacting of the oil droplets because of the high-surface area. Both plate and random-packing coalescers can be outfitted with either manual or automatic oil-unloading equipment. Solenoid valves and instruments sense the quantity of water in a particular area of the device. When the quantity of oil is high, the appropriate valves open and discharge the water-free oil from the unit. Manually adjusted unloading of the oil is sometimes carried out through simple overflow weirs or skimming assemblies. When manual oil-unloading is used, the equipment is less responsive to slugs of influent oil. Plate or media coalescers are probably best suited to oily waste streams containing suspended solids or other physical contaminants.

Cartridge Separators

Cartridge coalescers are devices in which the oil-water mixture is passed through fabricated paper or fibrous assemblies. The construction of the paper or coalescing media is such that it promotes the tortuous type of flow described earlier without causing high shear between the oil and water. The cartridges are usually cylindrical and are often constructed with pleated fabric, paper, or other porous media. Most cartridges have a discrete life expectancy and eventually lose their coalescence property. This loss of function is often actually a plugging of the cartridge rather than a destruction of its inherent ability to coalesce oil droplets. In some cases, cartridges can be rejuvenated by special techniques; in other cases it is more practical to replace them.

A typical cartridge-type coalescer is shown in Figure 51. In the coalescing section of these devices, the fluid flow is normally from the inside of a cylindrical cartridge to the outside. Both the oil and water flow through the medium, and as the liquids pass through the twisted pathways of the paper, the oil droplets are joined. On the outside of the paper cartridge, the oil is generally in the form of large globules that easily

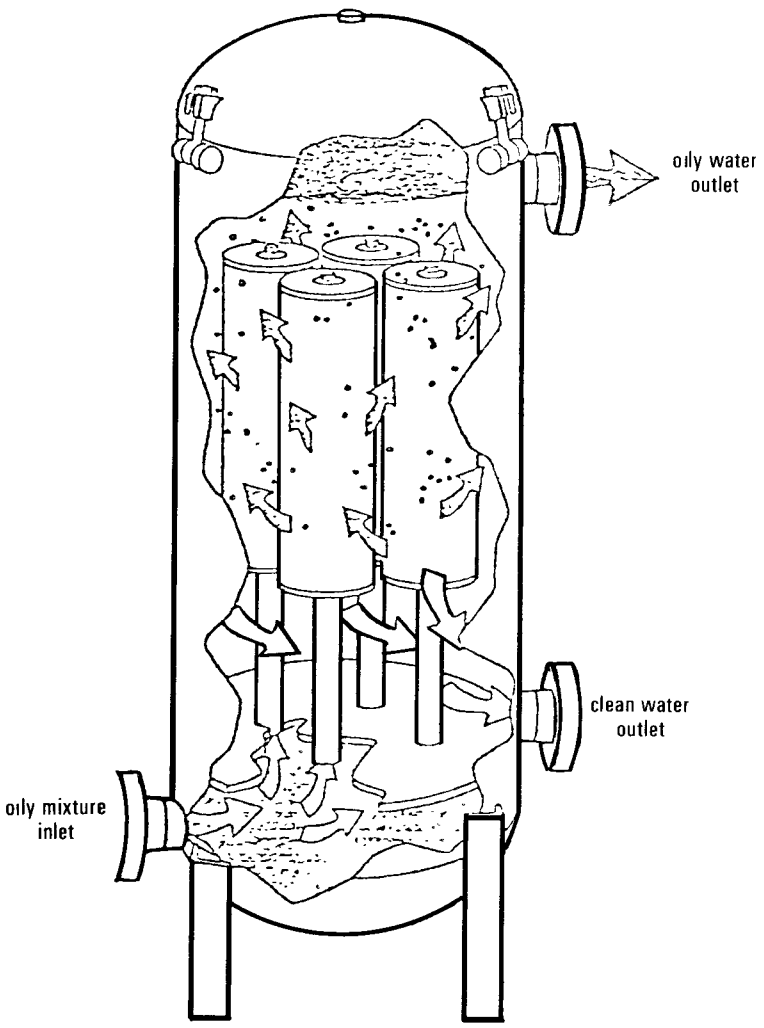

Figure 51. Cartridge-Type Coalescing Oil-Water Separator

float to the top of the tank or pressure vessel. As in other oil separation devices, the quantity of oil accumulated at the top of the tank may be sensed and then discharged either through an automatic solenoid valve or a simple manual valve.

In many cases, cartridge-type coalescers are preceded by cartridge filters designed to remove any particles from the oily waste mixture that might plug the passages of the coalescing cartridges. Cartridge prefilters are usually of about 10-micron porosity. This degree of filtration removes particles of dirt, metal chips, and other fibrous matter that might be detrimental to coalescing cartridges. Where prefiltration cartridges are used, the life expectancy of coalescer cartridges is strongly dependent on the percentage of particulates eliminated by the prefilteration. Coalescer cartridge life is usually measured in months; in many devices, cartridges are replaced every 4-6 months. However, if careful attention is not given to the system, upset conditions or improper feed can overload cartridges in a matter of days.

The advantage of cartridge coalescers over plate coalescers is better separation and removal of oil droplets from the water. It is not uncommon for cartridge coalescers to produce an effluent quality in the range of 5-10 ppm of residual oil. However, truly emulsified or soluble oil is not removed even by cartridge type coalescers. If the oil is in droplets, or if it is chemically emulsified, it can usually find its way directly through the coalescing medium and continue to contaminate the product water. Cartridge coalescers, although generally requiring more operating labor and attention, offset this by producing higher quality effluent water. The choice must be made on the basis of characteristics and variability of the influent together with the degree of oil-water separation to be accomplished.

FILTRATION SYSTEMS

Oil removal filters generally fall into two broad categories. The first includes those with a filter medium that adsorbs the oil phase in oil-water mixtures, typified by the various carbon or charcoal bed or cartridge devices. The other is ultrafiltration, which uses several kinds of micro-fine porous media.

Carbon Charcoal Bed Filters

In this equipment, two mechanisms are generally occurring simultaneously: intermingling and coalescing of fine droplets of oil in the mixture and adhering of the oil to the surface area of the filter medium.

Most equipment of this type has a fixed capacity for adsorption of oil; that is, a point is reached when the medium can no longer retain oil from the influent water. At this point, normal practice is to remove the filter medium from service and regenerate it, stripping the oil by physical or chemical means. In some units, an oil solvent is pumped through the filter bed to dissolve the oil; the solvent is recovered through a separate oil-separation and solvent-distillation system. Other equipment may use steam to strip the oil from the adsorber surface. In some cases, the activated medium is simply used to saturation and then disposed of as a solid waste; the wisdom of this approach depends on the quantity of oil to be removed and the replacement cost for the

medium. When large quantities of activated carbon are used to remove only trace oils from water, it may be practical to send the spent carbon to a central processing station for thermal reactivation.

A typical activated carbon oil filter is shown in Figure 52. In many ways, this equipment resembles classical carbon or bed-type filtration systems. The oil-water mixture enters the device and then is thoroughly distributed through the bed of granules or particles. The usual combination of coalescence and adsorption operates to separate the oil from the water. In some equipment, provision is made for the separated oil to rise to the top of the vessel.

When the carbon or other filter medium is loaded to capacity with oil, it is removed from the vessel or simply regenerated in place, for instance, by steam-stripping or solvent-washing of the activated bed. This removes virtually all the oil. Clean carbon or other activated media can often remove oil to below-detectable limits. However, when the carbon or medium becomes saturated, there is usually a total breakthrough of oil. In extreme cases, the effluent from the device may contain the same amount of oil as the influent water, or may even be higher in oil concentration for brief periods.

As mentioned earlier, the labor and replacement costs of filtration systems make them more expensive than other oil-removal devices. However, when properly operated they probably give the highest quality of oil removal.

Ultrafiltration

The second type of oil-water filtration device is based on special porous media. Examples of this technology are membrane ultrafilters or specially treated cloth media in conventional plate and frame or drum-type filters.

A distinction should be made between these two types of media filters. In filters using cloth, the entire liquid flow is normally pumped directly against the separating sheet. Water passes freely through the sheet, while the oil is generally retained or brought off as a separate side stream. In membrane ultrafilters, the bulk fluid flow is parallel to the membrane face, with a pressure difference occurring across the membrane. This pressure difference prompts the oil-free water to flow through the microfine pores of the feed side and the oil to pass off in a more concentrated side stream.

In ultrafilters, as shown in Figure 53, plastic membrane sheets with extremely fine porosity are used; the pores often range from .02 to .04 microns, smaller than those in sophisticated membrane filtration equipment. Membrame filters with pores from .2 to .4 microns are used for such specialized separation as the removal of bacterial, colloidal, and other very fine matter from water. Ultrafiltration membranes with their much finer porosity permit only the passage of water molecules, while oil droplets and even emulsified oil molecules are retained by the membrane. Ultrafiltration can be used to remove even totally soluble oils from water. The quality of water produced by ultrafiltration is extremely high, usually approaching no-detectable-oil and with a substantially reduced chemical oxygen demand. Ultrafiltration equipment is normally more expensive, and consideration must be given to the life expectancy—and the

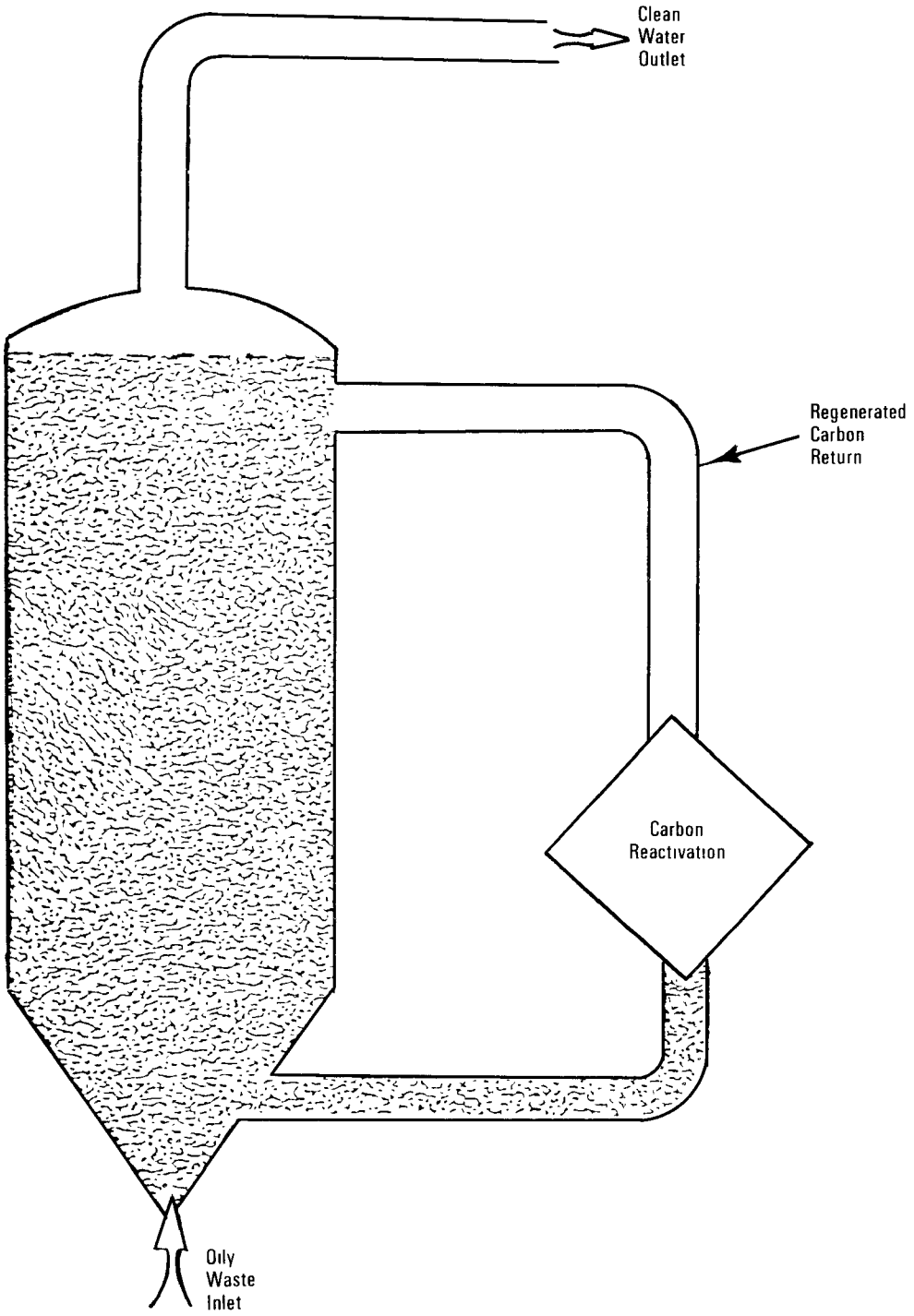

Figure 52. Carbon Adsorption

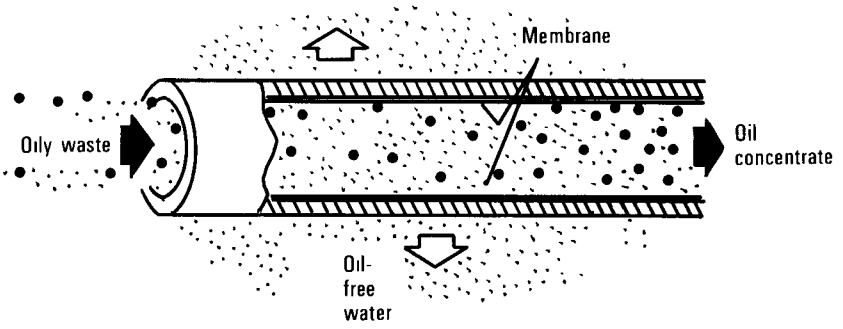

(a)

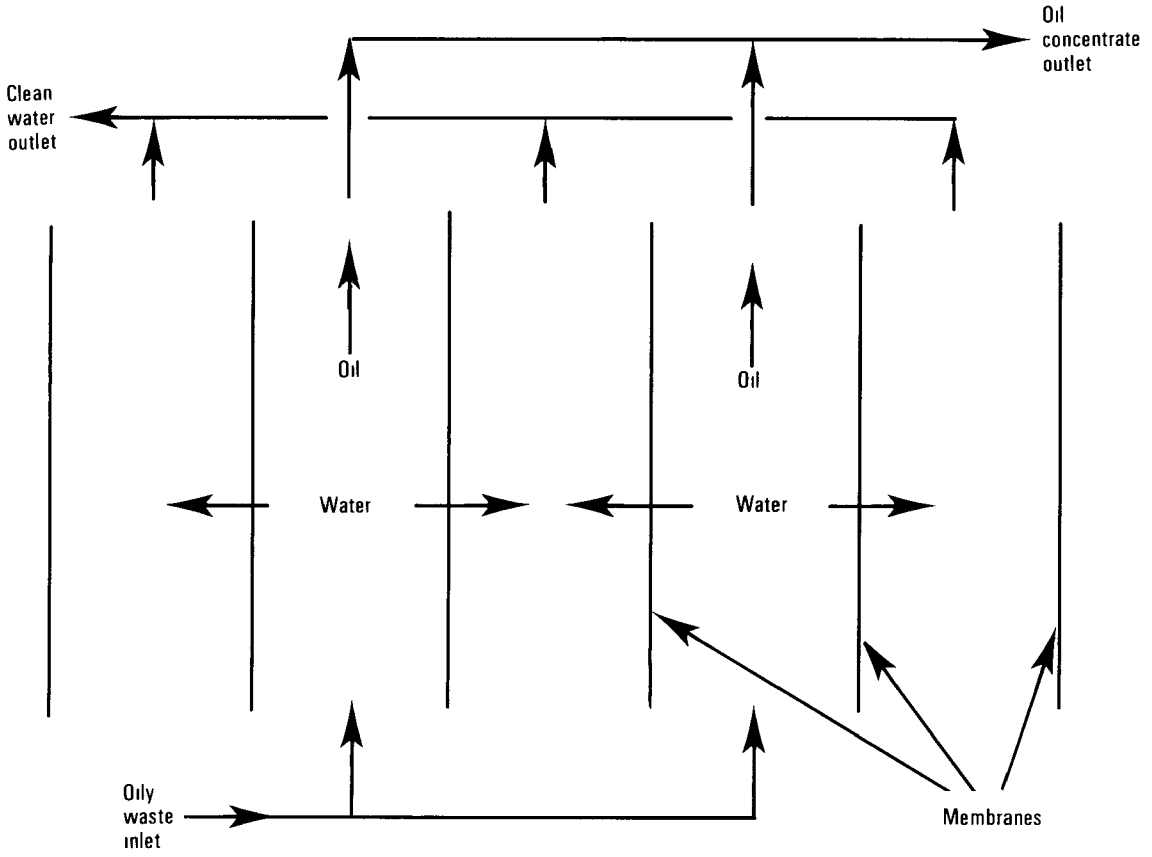

(b)

Figure 53. Ultrafiltration Process

replacement cost—of the active membranes. Another characteristic of ultrafiltration that must be considered is that oil is normally removed as a concentrate, in a typical "blow-down" fashion. This blow-down is seldom 100-percent oil and often contains residual water. However, the blow-down usually responds well to typical gravity-type separation, and if the concentrate is permitted to stand quietly for a short time, a distinct oil layer is formed. The oil-free water separated from this concentrate can usually be recycled to the equipment.

Ultrafilters may have many mechanical configurations. Some of those in common use are tubular types, flat membrane "plate and frame" types, and sheet membranes used in various cartridges (usually spiral-wound).

EQUIPMENT COSTS

The economics of oil-water separation is an imprecise subject because of the diversity of feedwater concentrations and differences in effectiveness of equipment. The curves in Figures 54 through 56 give approximate capital costs for equipment, based on gallons per day of feed for various types of control processes. The wide divergence is obvious. In general, more sophisticated processes with the capability to totally remove oils from water are more expensive than simpler ones that accomplish only a gross separation. Equipment costs can range from a fraction of a dollar per day per gallon treated to as high as $10 per day for each gallon treated. The less expensive devices are typically the plate or cartridge type coalescers, while the more expensive ones are the highly specialized ultrafilters.

The cost of media replacement for oil-water separation equipment is difficult to predict. Devices using extended surfaces, such as plate and packed coalescers, have virtually no replacement costs for maintaining their oil-water separation capacities, whereas the life expectancy of the cartridge coalescers may be uncertain and will depend on the wastewater characteristics. The usual prices for replacement of cartridges for either the prefiltration or coalescing sections of coalescing-type separators range from approximately $10 to $30. It is not unusual for a single cartridge of this type to have a capacity to treat 10,000 gal/day. At the extreme end of the scale, the membranes used in ultrafiltration may cost anywhere from a few dollars up to $30-$40/ft^2. However, a single ft^2 of membrane may have the capacity to treat only about 20-30 gallons of influent water per day. Good ultrafiltration membranes, properly operated, may have a life expectancy of several years.

Thus, the economic picture for separating-media is complex. It is necessary to consider both the degree of oil removal required and the technical suitability of the process providing the most practical, long-term operation at the lowest operating expense. As might be expected, the most practical answer is sometimes a combination of processes. Thus, a pretreatment step using gravity separation, coalescers, or other devices for bulk oil removal can accomplish gross separation at least cost. If fairly complete oil removal or polishing is required for part or all of the stream, the more sophisticated—and usually more expensive— processes can be employed. With

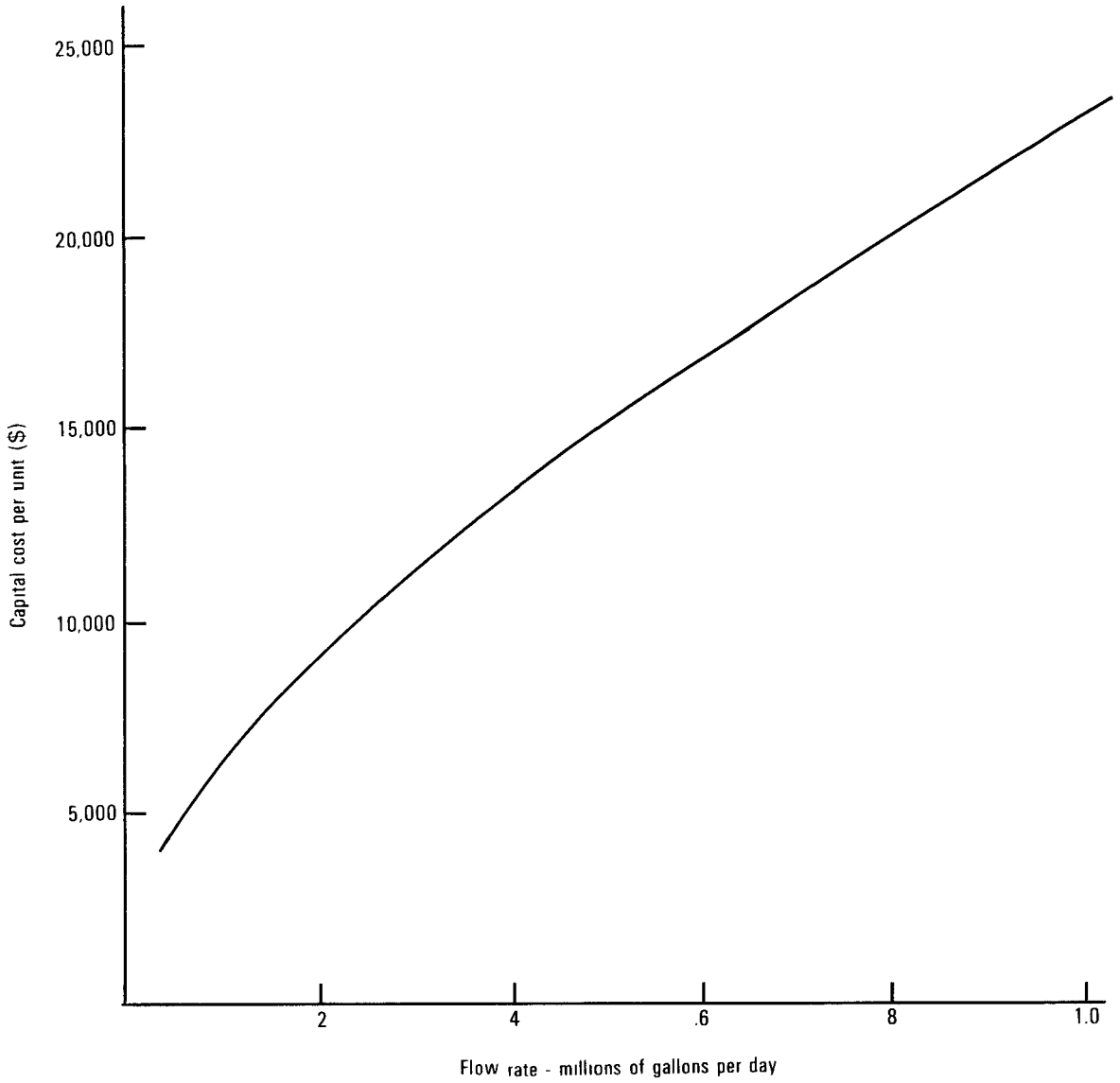

Figure 54. Capital Cost vs. Flow Rate of Oil-Water Separators of API Specifications

pretreatment by earlier processes, it is reasonable to expect effective and quite acceptable economical performance from final polishing systems. Part of the economy of combining oil separation processes is that each kind of equipment can be used only in the operation mode most favorable to its life expectancy and the performance of its medium.

Recovery and reuse of the oil from separation processes should also be considered. As described earlier, some operations return clean, water-free oil. In others, the oil and all other contaminants are accumulated as a "junk stream." Consideration should be given to the economic and pollution-control implications of the removed-oil stream.

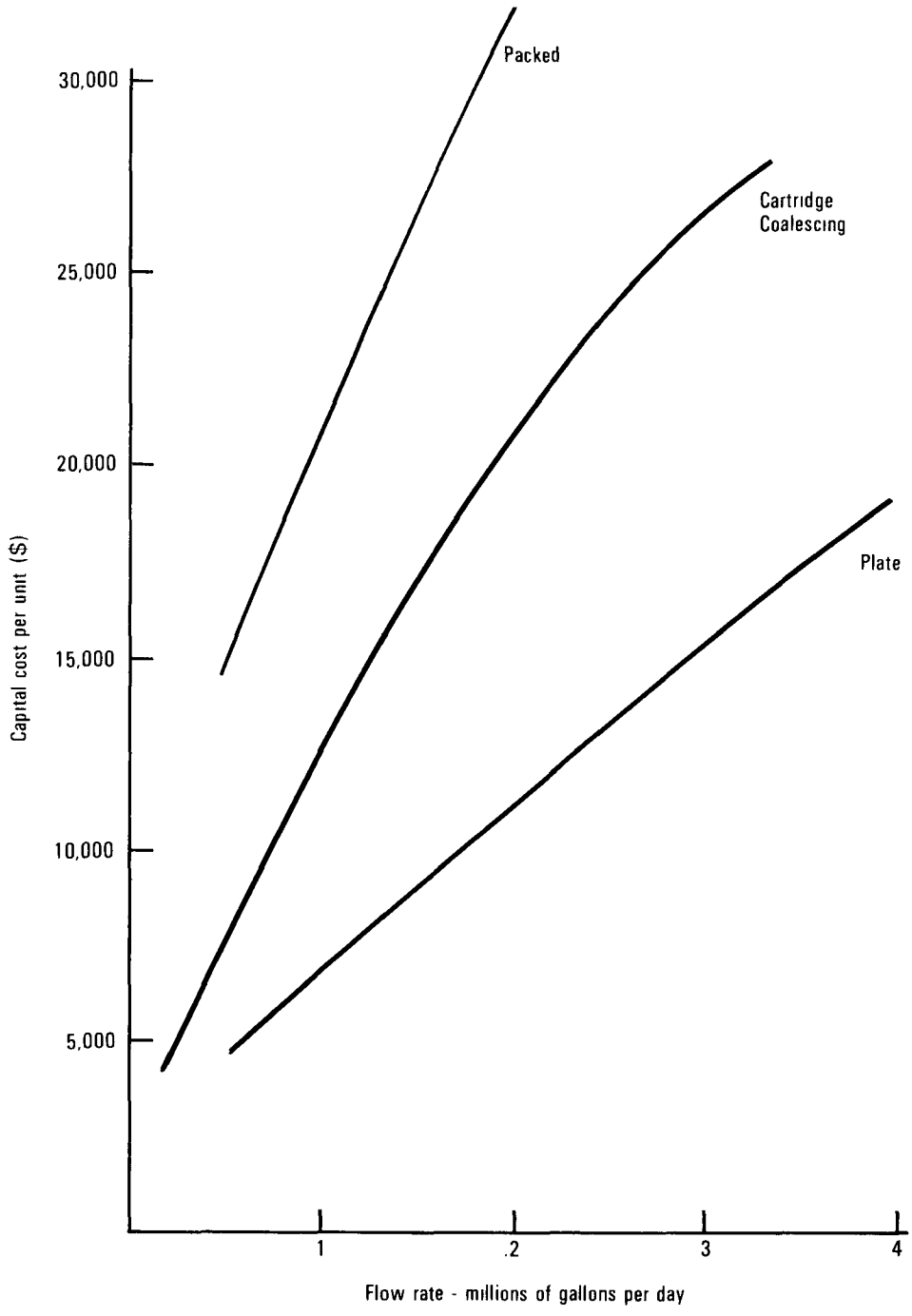

Figure 55. Capital Cost vs. Flow Rate for Various Oil-Water Separators

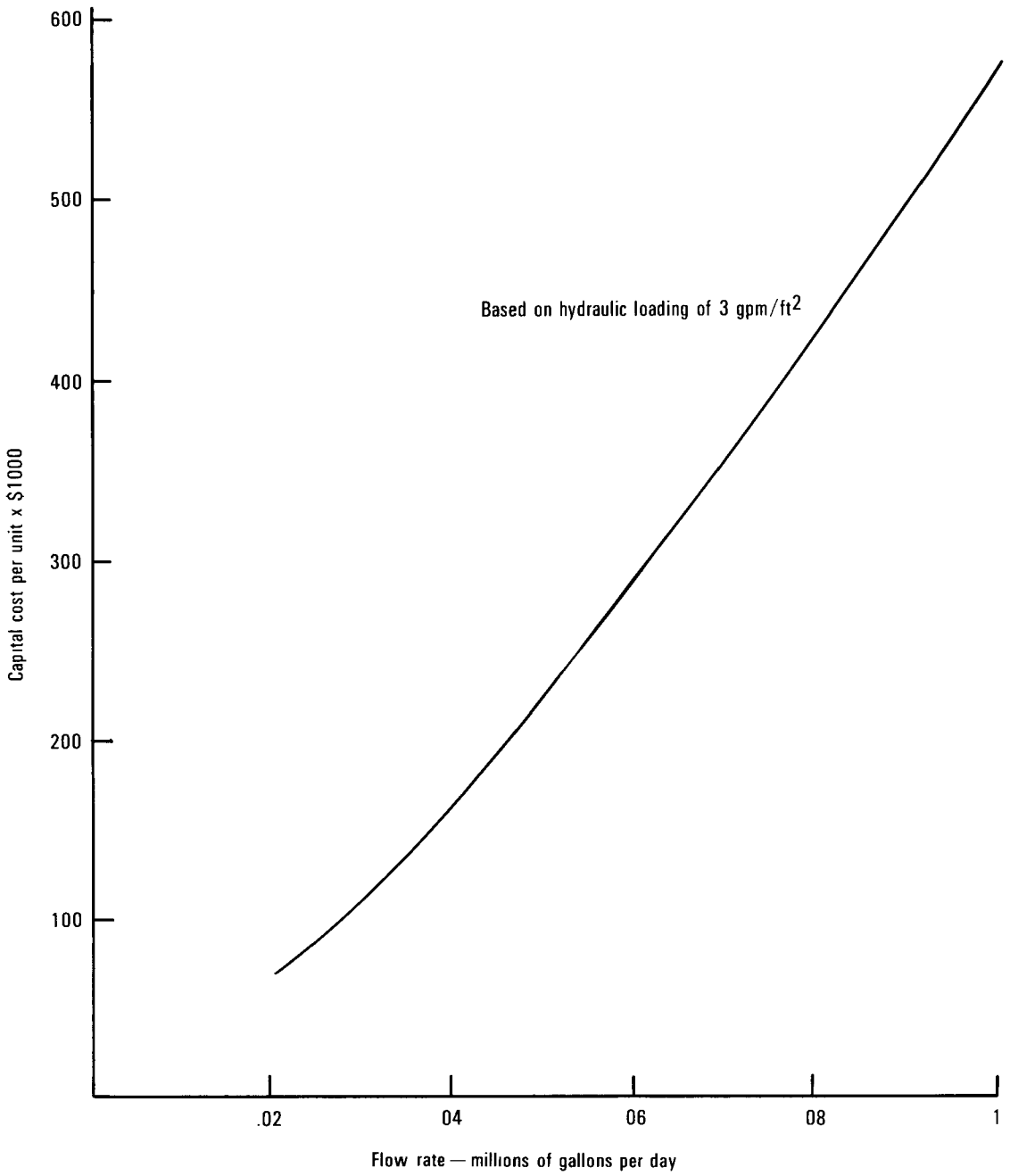

Figure 56. Capital Costs for Ultrafiltration of Oil-Water Mixtures

CHAPTER VII

HANDLING WASTE-ACID STREAMS

A manufacturer with a waste-acid stream must either recover the acid for reuse or must neutralize the stream, settle out the suspended solids, and discharge it. The neutralization requirement will eventually apply even to plants discharging to municipal systems because of the low pH prohibitions discussed in Chapter III. In this case, it may be possible to discharge the neutralized stream into municipal systems.

Generally speaking, sulfuric acid recovery is the only proven recovery technology available to the small manufacturer. Although there are commercially operating hydrochloric acid recovery systems, the economics are currently favorable only to the manufacturer with large muriatic acid pickling facilities. There is no proven technology for recovering mixtures of hydrochloric, sulfuric, nitric, or hydrofluoric acids.

Chromic acid recovery is possible through ion exchange or evaporation under certain conditions and is discussed in the EPA technology transfer metal finishing publication.[5]

In this chapter, we will discuss only neutralization and sulfuric acid recovery from pickling operations.

NEUTRALIZATION

Neutralization, the oldest and most widely used treatment for acid solutions, involves treating acids with alkalies to achieve a satisfactory effluent. The techniques of suspended-solids removal, that is, chemical precipitation, sedimentation, and clarification, are then applied to the neutralized stream. If neutralization is to be effective, it must not only reduce the acidity or alkalinity of a solution, but must also convert the metals into insoluble metal hydroxides that can be removed in downstream separation equipment. Thus, neutralization can be viewed as a pretreatment method in a total waste treatment operation.

CHEMISTRY

The chemical equation that describes neutralization is:

$$\text{ACID} + \text{BASE} \longrightarrow \text{SALT} + \text{WATER}$$

All water solutions of acids and bases are measured by their relative hydrogen ion (H^+) and hydroxyl ion (OH^-) concentrations. In water, the equilibrium product of the

H^+ and OH^- concentration is a constant, 10^{-14} at 25°C. The scale used to measure this relationship is referred to as pH, defined as:

Log (hydrogen ion concentration in g-moles/liter)

Pure water at 25°C, in which the H^+ and OH^- concentrations are equal, 10^{-7}, has a pH of:

$$\text{Log } 10^{-7} = 7$$

Figure 57 covers a range of acid and base solutions. Acid solutions increase in strength as the pH value falls below 7, while base solutions increase in strength above 7. It should be noted that the pH scale is not linear with respect to acidity or alkalinity

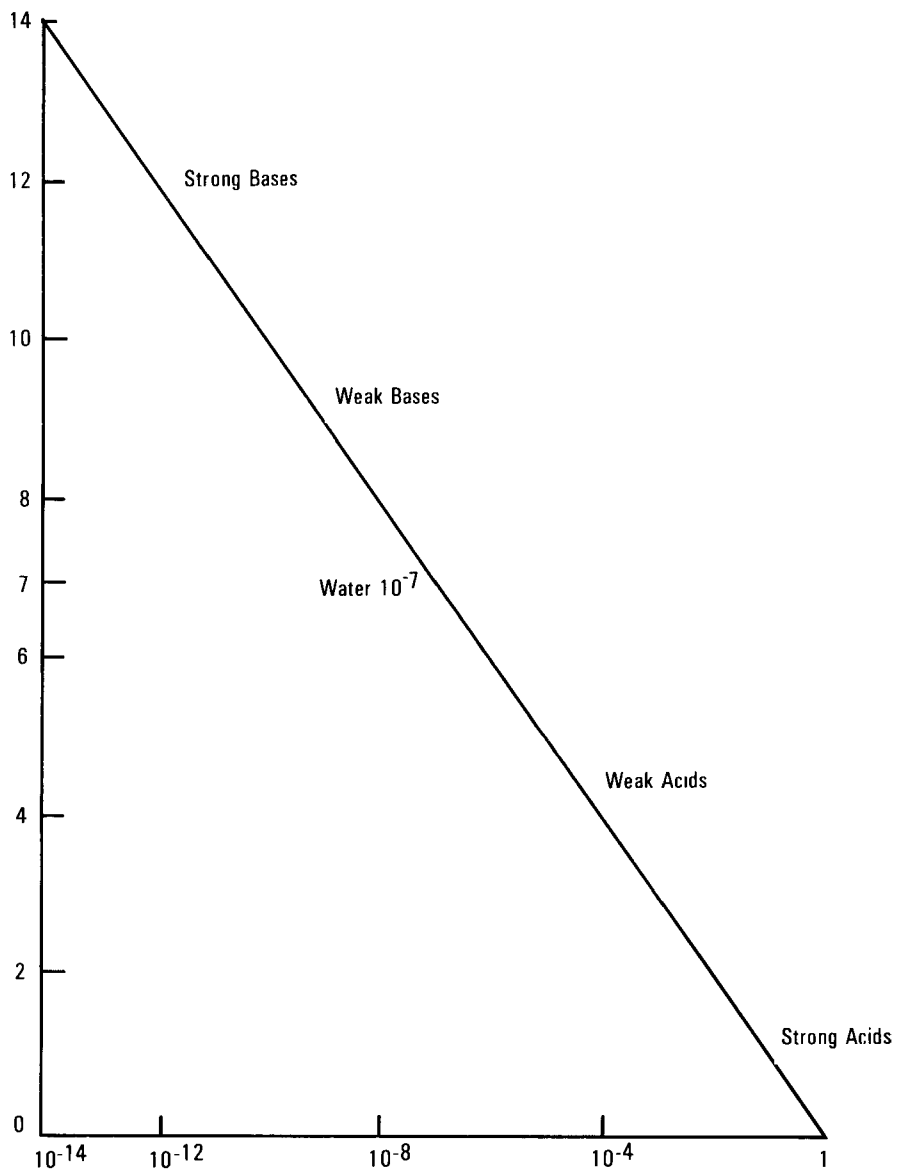

Figure 57. pH Scale-Concentration of H^+ at Various pH Values

and that a change in one unit of pH represents a tenfold change in the strength of the acid or base. In designing a control system, this is an important concept.

SELECTING A pH CONTROL SYSTEM

Although neutralization is a very simple concept, the design and operation of a neutralization system requires a surprising amount of care. This is especially true if the effluent is to be monitored on a continuous, instantaneous basis rather than by a 24-hour composite and if the resulting suspended solids are difficult to settle.

There are two initial decisions to be made: (1) whether the system should be batch, semi-continuous, or continuous; and (2) the type of neutralizing chemical to be used.

The first determination can be made entirely on the basis of the flow of the acidic stream and the space available at the plant. Batch neutralization eliminates control and compliance problems associated with continuous neutralization, since the pH of the entire stream can be measured and brought within compliance before discharge; the chance of a violation is thus very low. Batch neutralization, however, quickly becomes unwieldy, and excessive mixing power is required to maintain uniformity. The economics of switching from batch to semi-continuous to continuous neutralization depend on plant conditions. If the flow is 5,000 gal/day or less, batch operation (Figure 58-a) is usually feasible. The waste stream can be collected in one basin, and the neutralization agent (usually lime, limestone, or caustic) can be added until the desired pH is obtained. Depending on the strength of the waste acid, considerable heat can be generated. Settling time for solids is required after neutralization, and two basins or tanks may be needed.

In semi-continuous operation, Figure 58-b, the neutralizing agent is added continuously with the acid, but the effluent discharge is handled in batches after the final adjustment. This method is very common and allows a more even neutralization process. However, it has the same disadvantage as the pure batch system in that as the flows become large, the size of the neutralization system eventually becomes prohibitive.

The continuous process (Figure 58-c) allows larger flows to be handled with smaller equipment or basin sizes. For plants with large flows, this is usually the only available option. In designing a pH control system, it is important to know the amount of change in pH the system is expected to effect. If there is a possibility of significant variation in loads, then staging will be required. The first stage makes the major adjustment and the following one or two stages are used to trim the pH to its required final value. In the system shown in Figure 58-c, the first stage brings pH to about 3.0, the second to 3.5, and the last stage brings it to the required value.

If the total water flow is large and only occasionally requires pH adjustment (as in the case of an acid spill, for example), it is usually less expensive to install a diversion pond that is used only when the pH is out of range. A system of this type is shown in Figure 59. In this case, no pH adjustment is made until the stream is outside the desired range, at which point the wastewater is directed to the diversion pond until the

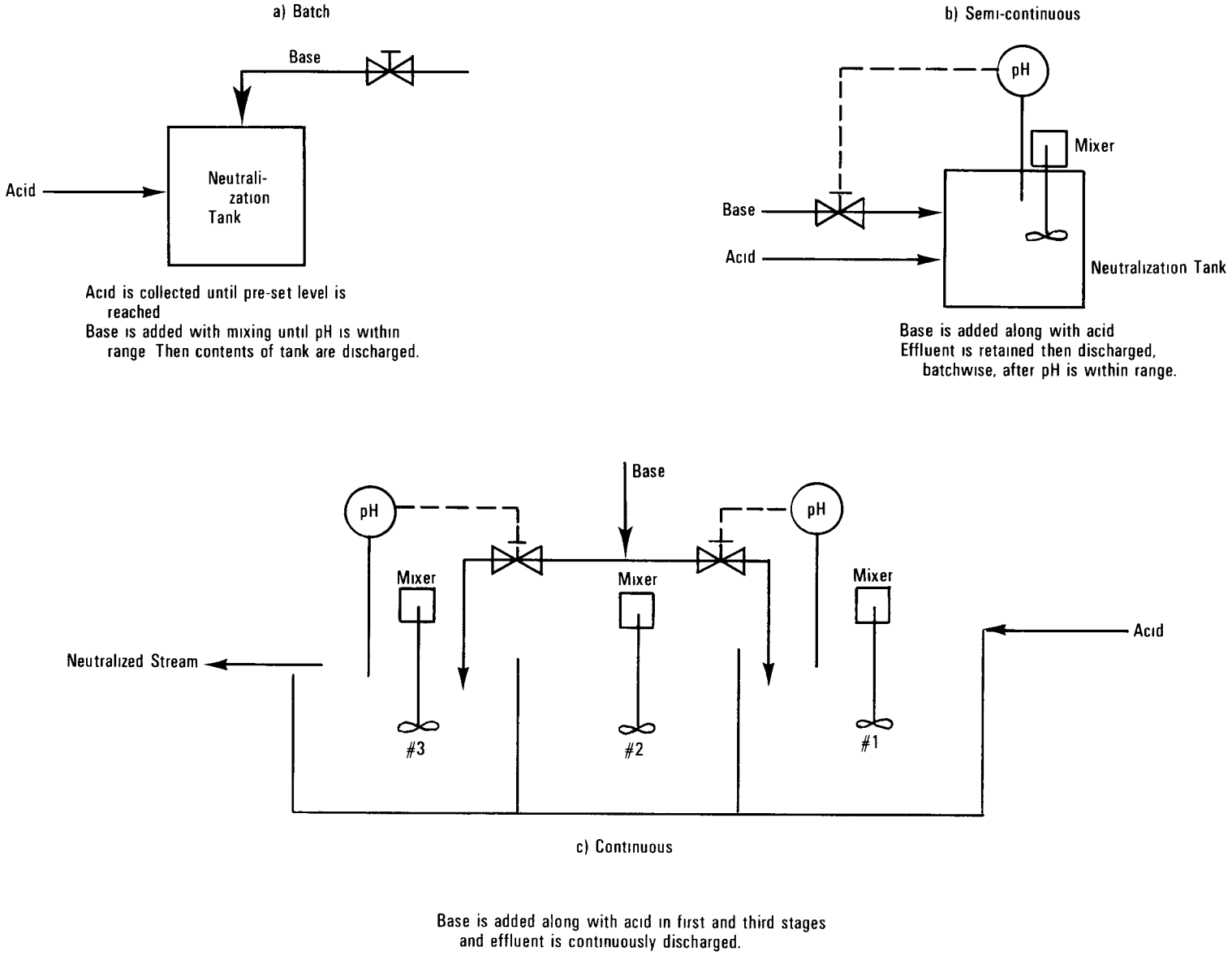

Figure 58. Neutralization Systems

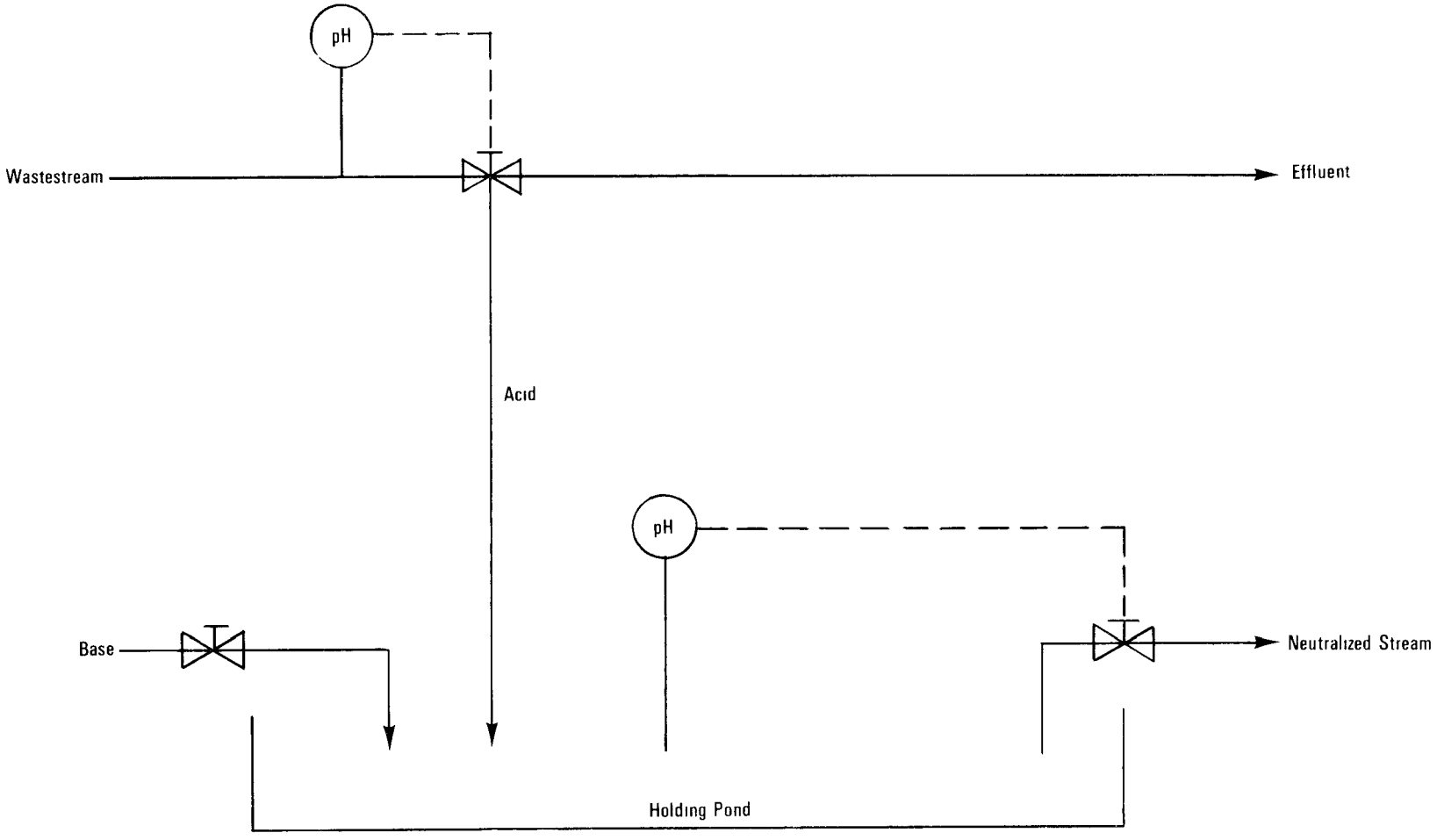

Figure 59. Diversion Pond to Control pH

pH imbalance is corrected. The water in the pond is then neutralized and discharged over a convenient period. The pond must be sized to hold the maximum amount of water expected to be discharged over the period required to correct the situation.

AUTOMATIC CONTROL SYSTEMS

In all the systems discussed, pH must be measured and an alkali added. For batch and semi-continuous systems this need not be done automatically, since there is time to measure pH and add further reagents. In continuous neutralization, however (unless the holdup time is measured in days), automatical control should be used.

There are many suppliers of pH electrodes and complete-control systems. From a titration curve of your waste stream, these manufacturers can design a system for you. It is important, however, that they be fully aware of the variability likely to occur in the effluent to the neutralization system.

CHOOSING A NEUTRALIZING AGENT

The choice of neutralizing agent is a trade-off of capital costs vs. operating costs and convenience. Limestone (if available within a reasonable distance) or quicklime (if freight is a factor) will usually cost less per unit of neutralizing capability. However, quicklime requires a slaking system and limestone can present problems in neutralization consistency. Calcium compounds such as lime produce insoluble calcium sulfate, which requires settling if the plant faces suspended-solids limitations. Sodium hydroxide, on the other hand, is very convenient to use, since it can be obtained as a solution and accurately and reliably fed with a metering pump or control valve. As shown in Table 15, however, it is more expensive to buy.

Economics will generally favor sodium hydroxide for small installations and lime for larger ones, with the breakeven point depending on location.

A possibility worth investigating is availability of a basic waste stream from a nearby plant. Although caution is required, in that you may be bringing new pollutants into your own waste stream, if a suitable stream can be found you may be able to reach a mutually beneficial agreement with the source facility.

Once again, vendors of neutralization systems will make recommendations, based upon your waste stream, of the most economic neutralizing agent. Such recommendations should not be accepted blindly; in most cases, for small or medium flows it is wise to estimate the costs of both lime and caustic.

ACID RECOVERY

Some plants may have enough spent sulfuric acid liquor from pickling steel to justify recovery of the free acid. There are several commercially available sulfuric acid recovery processes. Most are similar, in that ferrous sulfate (the compound formed

Table 15

Cost Comparison of Common Commercial Alkaline Agents

Agent	Chemical Formula	Price ($/ton)	Lbs/lb H_2SO_4 Neutralized	Relative Cost
Sodium Hydroxide (Caustic)	NaOH	178.00	.810	7.80
Sodium Carbonate (Soda ash)	Na_2CO_3	74.00	1.100	4.30
High Calcium Hydrate (Hydrated lime)	$Ca(OH)_2$	34.10	.756	1.40
High Calcium Quicklime (Lime)	CaO	32.50	.571	1.00

Steps and Costs for Raw Materials to Neutralize 5,000 gal of Spent Pickle Liquor/Day:

Caustic Storage ⟶ Neutralizer - $818.80/day (Caustic)

Hydrated Lime Storage ⟶ Slurry Tank ⟶ Neutralizer - $194.40/day (Hydrated lime)

Quicklime Storage ⟶ Slaking ⟶ Slurry Tank ⟶ Neutralizer - $139.80/day

when steel is pickled with sulfuric acid) is crystallized from the spent solution and the remaining free acid is reused. If a plant's pickling operations are in the order of 6,000 tons of steel per year or greater, it should investigate acid recovery.

PROCESSES

One widely used recovery system batch-cools the spent pickle liquor to remove ferrous sulfate heptahydrate crystals (Figure 60). Another continuously operated system uses vacuum evaporation and cooling crystallization to remove these crystals. For pickle liquor volumes of less than 25,000 gal/day, the batch system is the most widely used in the United States.

In the batch system, spent liquor is pumped to the crystallizer, where the temperature is slowly reduced (over 8-16 hours) to about 50°F. Ferrous sulfate heptahydrate is crystallized from the solution during this cooling cycle, while sulfuric acid, required to replace the acid consumed, is added to enhance crystal yield.

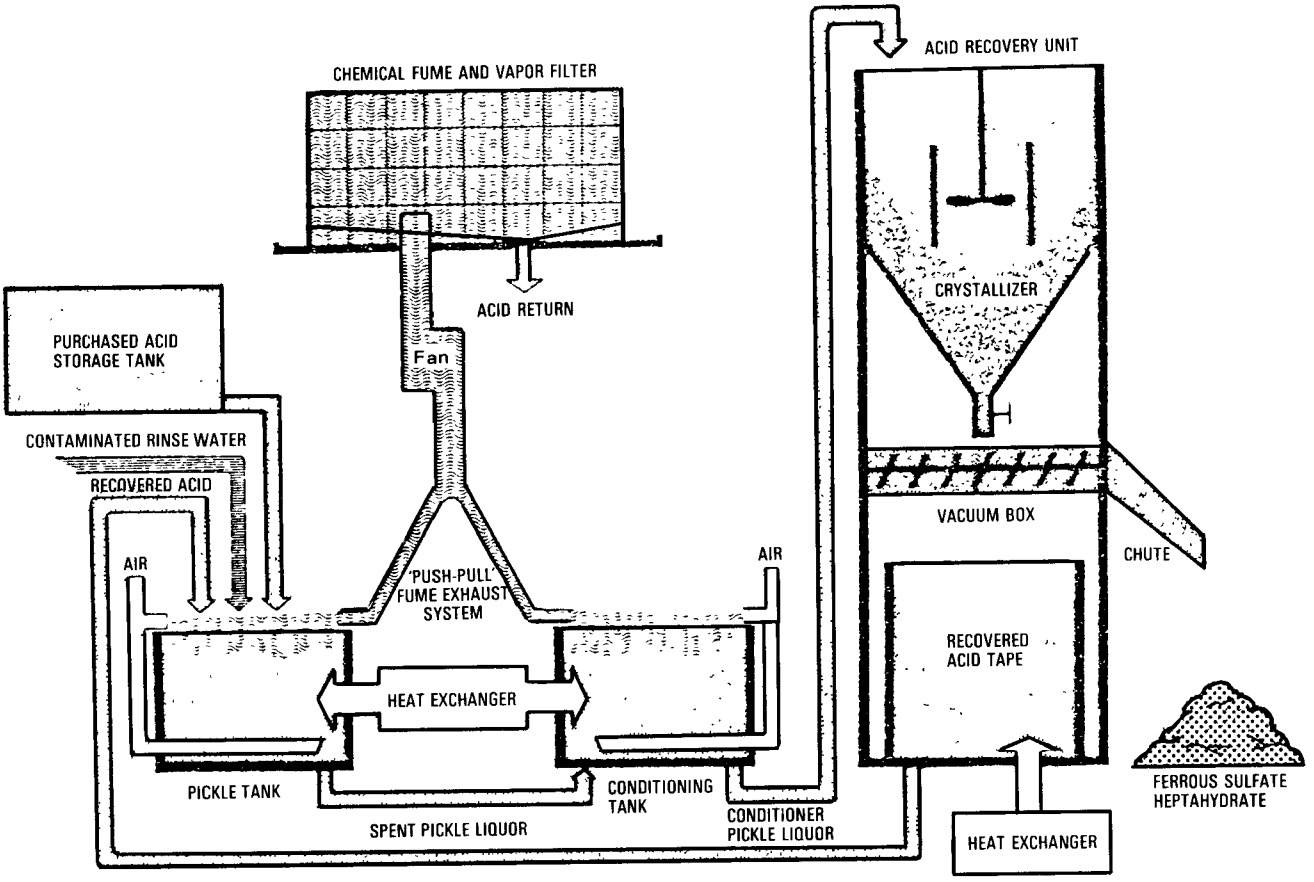

Figure 60. Pickling System with Acid Recovery Unit

The $FeSO_4 \cdot 7H_2O$ crystal slurry is fed to a crystal collection chamber that retains the crystals and allows liquor to pass through to an acid recovery tank. The retained $FeSO_4 \cdot 7H_2O$ crystals are then washed with small amounts of fresh water to remove them for storage or sale. The recovered acid is preheated with steam and returned as fresh makeup acid.

Heat exchange is accomplished in this system by circulating chilled water through cooling coils. A refrigeration unit maintains the cooling water temperature entering the crystallizer at approximately 40°F. Noncorrosive teflon heat-exchange coils are commonly used for cooling.

COSTS

Table 16 presents the comparative economics of neutralization and acid-recovery waste treatment systems for a pickling facility handling 100,000 tons/year. These acid-recovery process costs were estimated for the zero-discharge case, where modifications such as staged rinsing were made to the pickling tanks, and for the controlled discharge case. The operating costs for this plant, if contract hauling of the spent pickle liquor and pH adjustment of the rinse water were used, would be $436,500. (The hauling fee is $0.14/gal and the pH adjustment cost is $2.50/1,000 gal rinse water.) Contract hauling requires a much lower investment. As the capacity decreases, however, the economics can shift to the point where either neutralization or contract hauling would be favorable.

Table 16

Operating Cost Comparison of Pickle Liquor Waste Treatment Methods

Basis: 100,000 tons steel pickled/year; 1% Fe loss/ton steel pickled; spent acid composition 8% dissolved iron, 8% H_2SO_4; all figures in thousands of dollars/year.[1]

Item	Basis	Acid Recovery		Neutralization
		Zero[2] Discharge	Controlled[3] Discharge	
Investment		630.0	470.0	770.0
Salaries & Wages				
Operators	$12,500/man year	12.5	12.5	12.5
Foremen	$15,000/man year	1.5	1.5	3.8
Utilities				
Steam	$2.50/1,000 lb	35.4	0	4.2
Process Water	$0.30/1,000 gal	(8.1)	—	—
Electricity	$0.02/kWh	19.0	19.0	4.0
Raw Materials				
H_2SO_4	$50/ton savings	(50.0)	50.0	—
CaO	$33/ton	0	0	70.1
Shipping Costs				
Crystals	$5/ton $FeSO_4 \cdot 7H_2O$	28.8	28.8	0
Sludge	$5/ton	0		110.0
Maintenance	6% of investment	37.8	28.2	46.2
General Plant Overhead	$1.25 (wages & salaries + maintenance & labor	35.0	30.5	41.8
Waste Water Costs				
Sewer Fees	$0.40/1,000 gal	0	0	9.2
pH Adjustment	$2.50/1,000 gal rinse water	0	4.0	0
Taxes and Insurance	0.5% of investment	3.2	2.1	3.9
Depreciation	10% of investment	63.0	47.0	77.0
By-Product Credit	$10/ton $FeSO_4 \cdot 7H_2O$	(52.0)	(52.0)	0
Total Annual Costs		126.1	71.6	382.7

1. The economics are valid for these conditions only.
2. Includes investment for rinse system and air exhaust modifications.
3. Only includes rinse system modification. Some discharge of rinse water occurs and pH adjustment is necessary.

Present cost for contract hauling of spent pickle liquor @ $0.14/gal and pH adjustment of rinse water would be $436,500.

Rinse water included in process water for acid recovery plants at 25 gal/ton pickled steel.

The merits of acid recovery will also depend on the market for the recovered ferrous sulfate crystals, the iron level in the pickle liquor, and the amount of free acid in the spent liquor. The amount of dilute rinse water to be included in the recovery system is also important.

A detailed discussion is beyond the scope of this publication. Based on economics only, it now appears that plants pickling more than 6,000 tons/year of steel (assuming a 1-percent iron loss) might have an incentive to use sulfuric acid recovery instead of neutralization. If your plant's production falls above this capacity, you should investigate this option.

The EPA will soon be publishing a manual containing comprehensive information on acid-recovery methods and costs.

CHAPTER VIII

INDUSTRIAL CASE HISTORY

The 70-year-old Atlantic Wire Company is located approximately 1 1/2 miles from Long Island Sound on Connecticut's Branford River and produces basic and specialty wire for many industries. Wastewater, generated continuously from their manufacturing operations (Figure 61) and primarily from their pickling process, is handled by two individual treatment processes.

The raw material used, hot-rolled wire rod, is initially pickled in sulfuric acid (H_2SO_4) to remove rust and scale. The wire is then coated with hot lime or some other preservative and placed in an oven to bake on the coating; in some instances, wire may also be treated with a special liquor finish such as copper, tin, or zinc. The wire is then cold-drawn through dies to desired diameters, after which it is subjected to an annealing process before final storage and shipping.

Pickling takes place on two separate lines, one for rods or coarse wire and the other for fine-wire products. The acidic wastewater from these two sources (designated Large Cleaning House and Small Cleaning House in Figure 61) combines with smaller streams contaminated with heavy metals (zinc, nickel, etc.) and amounts to an average flow of 180 gal/minute.

Atlantic Wire began seriously considering wastewater treatment in the 1960s to meet newly established state and local regulations. A system was selected that could provide regenerated H_2SO_4 from the spent pickle liquor and also neutralize rinse wastewaters. To integrate the system into the plant, several modifications were necessary, as follows:

- Heat exchangers were installed in the pickle tanks (previously, live steam was injected directly into the tanks);
- The water drain system throughout the plant was modified; and
- Pollutant sources were identified.

The result was a design, installed in 1966, that directed spent pickle liquor to the H_2SO_4 acid recovery unit, as shown on Figure 62. (In special instances, Atlantic Wire uses muriatic acid for pickling, in which case the spent liquor is hauled away by an outside contractor.) The acid recovery unit consists of three compartments: crystallizer, crystal drainage tank, and recovered acid tank. The crystallizer receives the hot spent pickle liquor. As the liquor gradually cools to 50°F, ferrous sulfate crystals (ferrous sulfate heptahydrate) are formed. The slurry is then dumped into the crystal drainage tank, where the liquors drain into the recovered acid tank and the crystals are

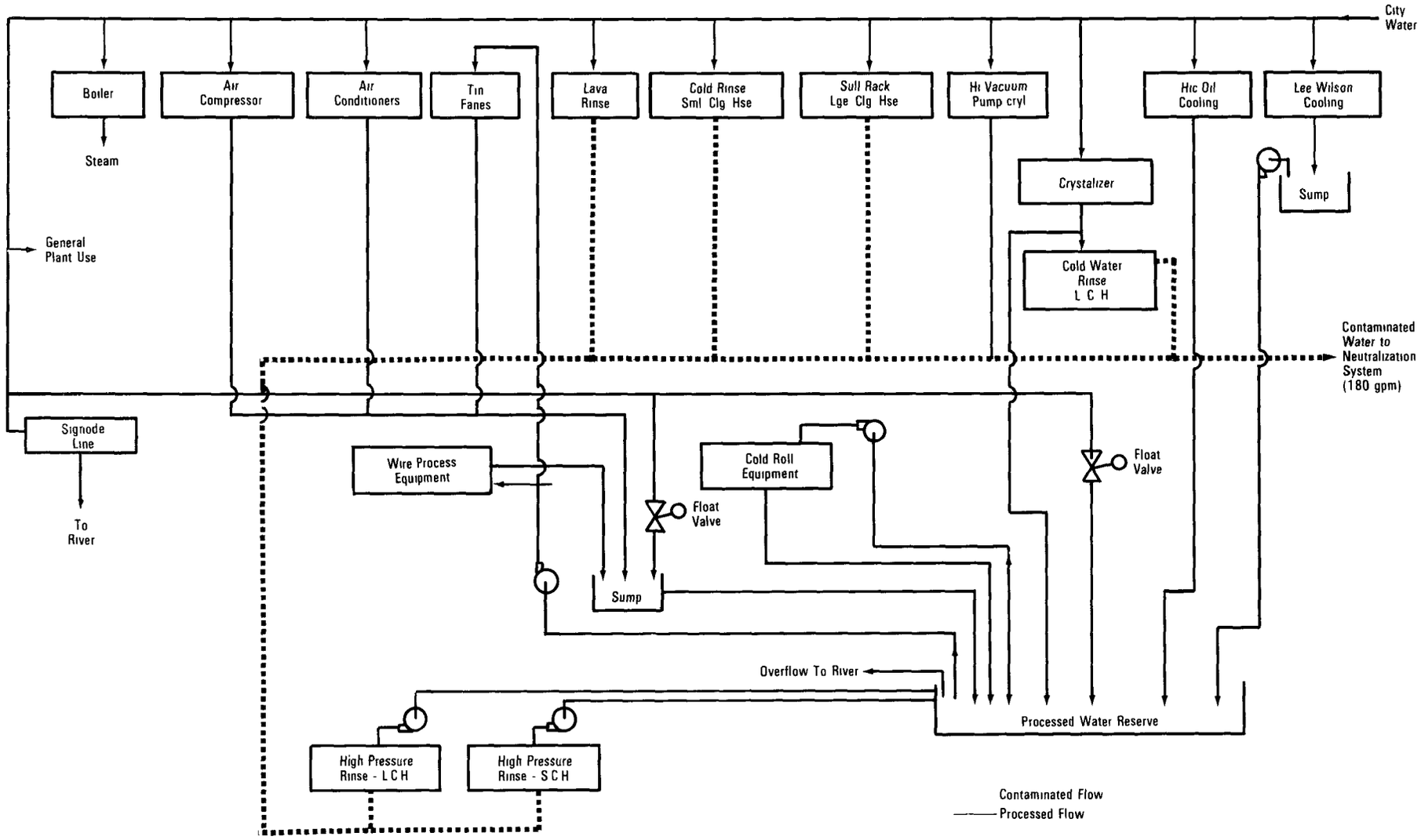

Figure 61. Atlantic Wire Water Flow System

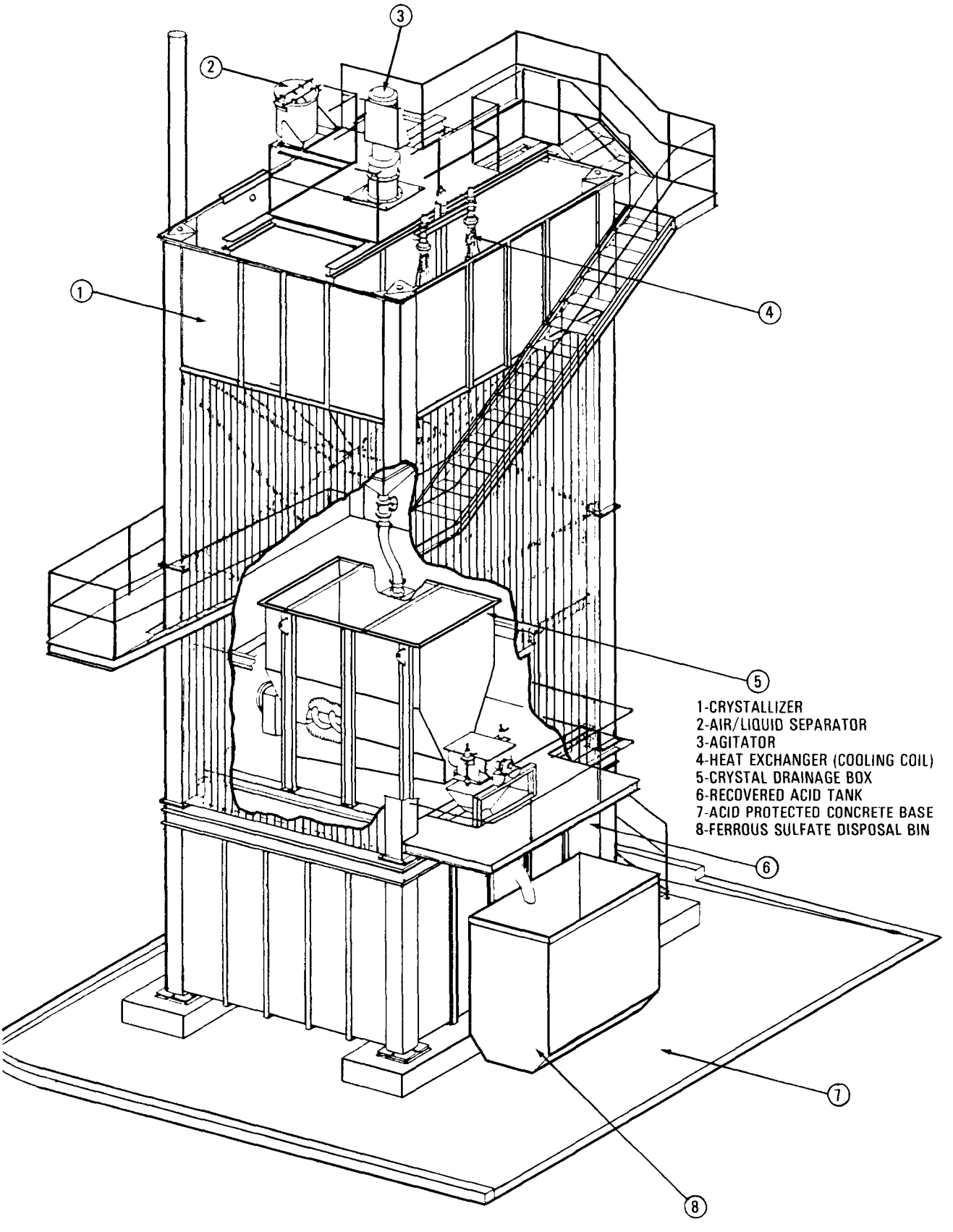

Figure 62. Batch Sulfuric Acid Recovery Unit

retained. The crystals are washed with fresh water and conveyed to disposal bins. The liquor (plus makeup sulfuric acid), now containing a low level of iron as ferrous sulfate, is recycled to the pickling tanks. Sulfuric acid savings are approximately 30 percent. The ferrous sulfate is a byproduct that is currently being hauled to a disposal site.

Acidic rinse water and the other waste streams, on the other hand, are directed to a neutralization basin, where caustic is injected to adjust the pH for precipitation of the heavy metals. The wastewater from the neutralization then flows to the top of a circular clarifier (24 x 29 ft) for settling aided by a polymer added at the top of the tank (Figure 63).

The installed costs in 1966 for the acid recovery and neutralization systems were $121,000 and $67,000, respectively. The only addition to this initial treatment system came in 1972, when near-rupture of a pickling tank prompted the design and installation of a fail-safe secondary drain system that would—in event of a major spill of the pickling tanks—direct the liquor to the neutralization system. This system raised the total installed costs of Atlantic's treatment system to approximately $256,000.

By 1976, state and local standards for heavy metals and total suspended solids became more stringent; improved settling efficiency was needed in the clarifier.

In order to comply with the new regulations, Atlantic Wire installed a plate separator and automated the pH control and polymer feed system. The plate separator was placed atop the high clarifier. The more efficient polymer injection, a flocculator tank with a mixer, and the increased settling efficiency of the plate separator combined to bring the effluent within the regulations. The clarifier was also changed to a holding or thickening tank to further concentrate the settled solids from the separator.

This modification is illustrated in Figure 63. As wastewater enters the neutralization basin, caustic (50 percent) is automatically injected as needed to maintain pH control between 8.5-10, which will more efficiently precipitate heavy metal. The neutralized wastewater is pumped to the flocculator, where a polymer (Betz #1100) is added; mixing occurs before the wastewater enters the plate separator. The wastewater from the separator discharges with about 1-percent solids directly to the preexisting clarifier, where the solids concentration is increased to about 3 percent. The clear effluent flows from the top of the separator and clarifier and is discharged to the river. The installed costs for adding the plate separator and for automation of the caustic and polymer feed system was approximately $58,000.

The volume of sludge that accumulates in the clarifier is about 30,000 gal/week. It is periodically hauled to the town lagoon by a local contractor, at an average cost of $175/week. Additional operating costs for the neutralization system include chemicals (caustic and polymer) at about $525/week. Costs of maintenance and supervision bring the total operation to approximately $1,100/week.

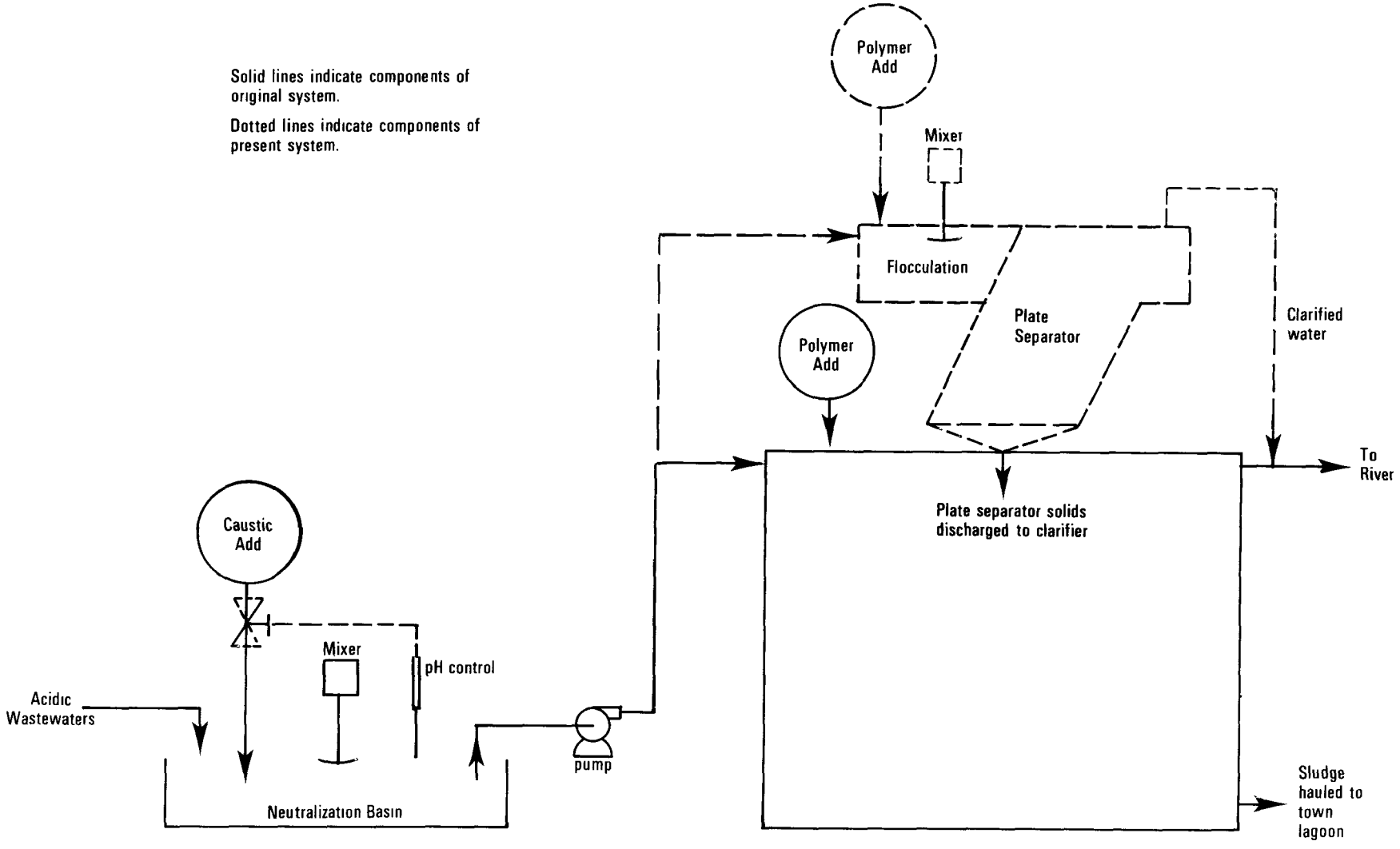

Figure 63. Atlantic Wire Neutralization System

Table 17

Discharge Composition

Chemical	Pre 1975 Performance	1976 State Standards	Current Performance
	Average Daily Conc.		
Chromium	10.0 mg/1	1.0 mg/1	0.11 mg/1
Copper	5.0 mg/1	1.0 mg/1	.05 mg/1
Iron	150.0 mg/1	2.0 mg/1	1.5 mg/1
Nickel	5.0 mg/1	1.0 mg/1	0.3 mg/1
Tin	5.0 mg/1	1.0 mg/1	0.5 mg/1
Zinc	10.0 mg/1	2.0 mg/1	1.15 mg/1
Total Suspended Solids	200.0 mg/1	25.0 mg/1	16.0 mg/1

Occasionally, problems occur with pH control mechanisms because of erratic flow within the plant that interrupts the continuous control. But the present system is operating well within the limits set by authorities, as is shown in Table 17.

Recently, on-site tests were performed at Atlantic Wire to determine the feasibility of further dewatering of the solids by a centrifuge. The results indicated that, although the centrifuge would increase the solids concentrations, the present system is sufficient to meet regulations and does not warrant the addition of the centrifuge at this time; it remains an option for the future. Reuse of the treated water in plant operations is also under consideration.

The Atlantic Wire Company has thus achieved successful control of its wastewater problems through an acid recovery process to handle spent pickle liquor, a neutralization system for acidic rinse waters, and removal of heavy metals from the manufacturing processes. Over the years, Atlantic's efforts to continually reassess its wastewater situation have resulted in appropriate technology for meeting state and local regulations and for maintaining costs at acceptable levels.

REFERENCES

1. Culp, Russell L., and Gordon, L., *Advanced Wastewater Treatment,* New York: Van Nostrand Reinhold Co., 1971.

2. "Development Document for Effluent Limitations Guidelines and Standards of Performance for the Machinery and Mechanical Products Manufacturing Point Source Category" (Draft). U.S. Environmental Protection Agency, 1975.

3. *Handbook for Analytical Quality Control.* U.S. Environmental Protection Agency, 1972.

4. *Handbook for Monitoring Industrial Wastewater.* U.S. Environmental Protection Agency, 1974.

5. *In-Process Pollution Abatement: Upgrading Metal Finishing Facilities to Reduce Pollution.* U.S. Environmental Protection Agency, 1973.

6. Lund, Herbert F., ed., *Industrial Pollution Control Handbook.* New York: McGraw-Hill Book Co., 1971.

7. *Manual on the Disposal of Refinery Wastes: Volume on Liquid Wastes.* Washington, D.C.: American Petroleum Institute, 1969.

8. Metcalf, and Eddy, Inc., *Wastewater Engineering: Collection, Treatment, Disposal.* New York: McGraw-Hill Book Co., 1972.

9. *Methods for Chemical Analysis of Water and Wastes.* U.S. Environmental Protection Agency, 1974.

10. Parsons, Dr. William A., *Chemical Treatment of Sewage and Industrial Wastes.* Washington, D.C.: National Lime Association, 1965.

11. *Process Design Manual for Sludge Treatment and Disposal.* U.S. Environmental Protection Agency, 1974.

12. *Process Design Manual for Suspended Solids Removal.* U.S. Environmental Protection Agency, 1975.

13. *Standard Methods for the Examination of Water and Wastewater.* American Public Health Association, Water Pollution Control Federation, 1975.

14. Weber, Walter J., *Physicochemical Processes for Water Quality Control.* New York: Wiley Interscience, 1972.

U.S. Environmental Protection Agency
Region 5, Library (PL-12J)
77 West Jackson Boulevard, 12th Floor
Chicago, IL 60604-3590

☆U S GOVERNMENT PRINTING OFFICE 1977—757-056/6564
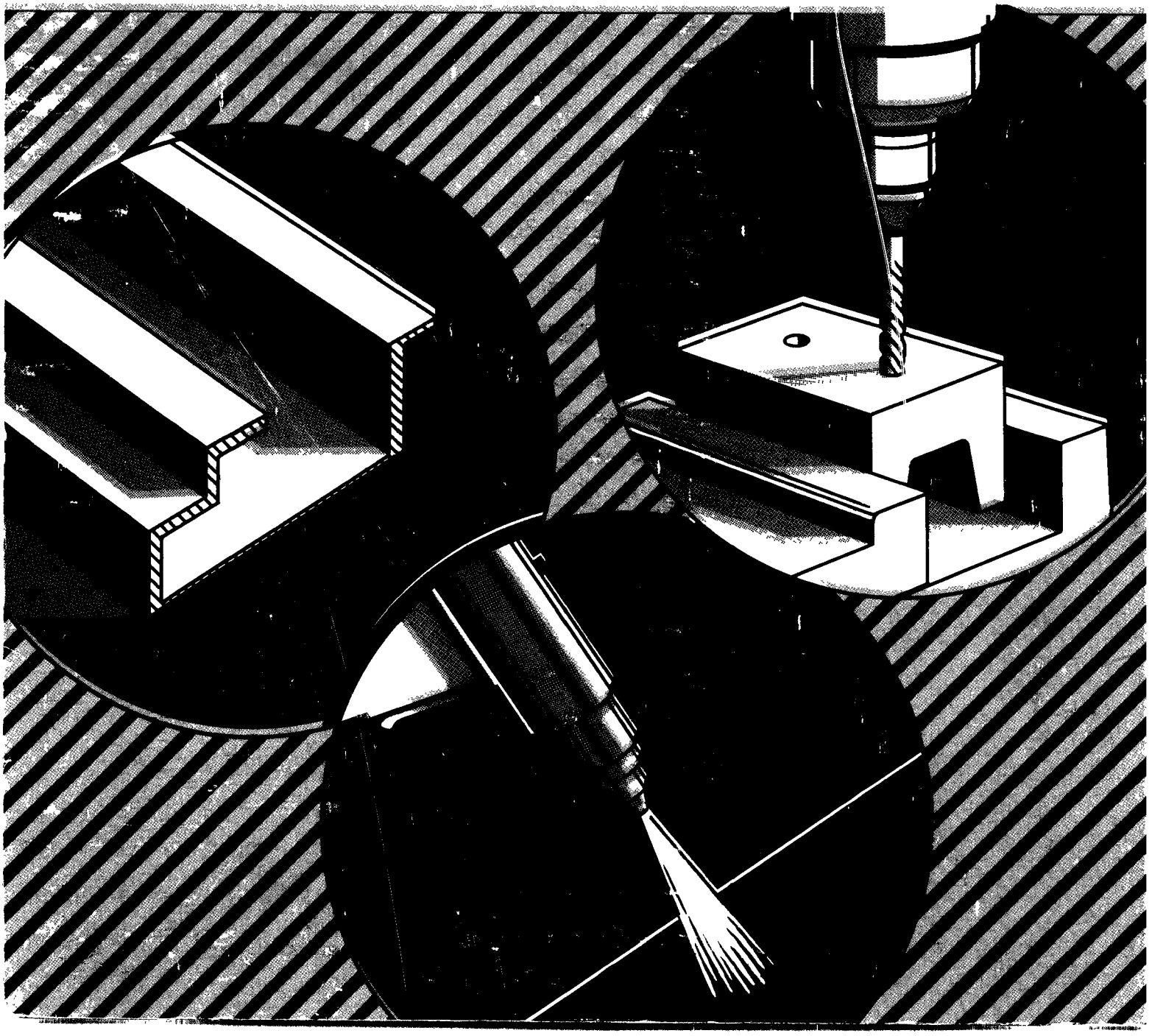
U.S. ENVIRONMENTAL PROTECTION AGENCY
ENVIRONMENTAL RESEARCH INFORMATION CENTER • TECHNOLOGY TRANSFER