EPA/540/2-89/038

SUPERFUND TREATABILITY CLEARINGHOUSE

Document Reference:

Research Triangle Institute. "PCB Sediment Decontamination Process-Selection for Test and Evaluation." Approximately 175 pp. Prepared for U.S. EPA, HWERL. September 1987.

EPA LIBRARY NUMBER:

Superfund Treatability Clearinghouse - FBZZ-1

U.S. Environmental Protection Agency
Region 5, Library (PL-12J)
77 West Jackson Boulevard, 12th Floor
Chicago, IL 60604-3590

SUPERFUND TREATABILITY CLEARINGHOUSE ABSTRACT

Treatment Process:	Physical/Chemical - Dechlorination
Media:	Soil/Generic
Document Reference:	Research Triangle Institute. "PCB Sediment Decontamination Process-Selection for Test and Evaluation," and slide presentation on "Effective Treatment Technologies for the Chemical Destruction of PCB." Approximately 200 pp. Prepared for U.S. EPA, HWERL. May 1987.
Document Type:	EPA ORD Report
Contact:	Dr. Clark Allen Research Triangle Institute P.O. Box 12194 Research Triangle Park, NC 27709 919-541-5826
Site Name:	Guam (Non-NPL)
Location of Test:	Research Triangle Park, NC

BACKGROUND: This document is a report describing the assessment of seven alternative treatment processes that show potential for decontaminating polychlorinated biphenyl (PCB)-contaminated sediments. The processes are KPEG, MODAR Supercritical Water Oxidation, Bio-Clean, Ultrasonics/UV, CFS Extraction, B.E.S.T., and Low Energy Extraction. Each process was evaluated using five criteria: the probability of cleaning sediments to 2 ppm or less; the availability of a test system; the test and evaluation effort required; the time required for future availability of a commercial treatment process; and the probable cost of treatment using the process. The evaluation of the criteria for each process was carried out by engineering analysis of available data and site visits to developers' facilities. This report deals with the KPEG process for the destruction of PCBs.

OPERATIONAL INFORMATION: The KPEG process was demonstrated in the treatment of contaminated soil on Guam by way of the Galson Terraclean-Cl process. This destroys PCBs by nucleophilic substitution. Potassium hydroxide is reacted with polyethylene glycol (PEG) to form an alkoxide. The alkoxide reacts to produce an ether and potassium chloride.

Addition of an RO-group enhances the solubility of the molecule and makes it less toxic. The reaction may continue until several chlorine atoms are removed from the PCB molecule. The reagent consists of a mixture of PEG, potassium hydroxide, and dimethyl sulfoxide (DMSO).

Contaminated soil or sediment is fed to the reactor from 55-gallon drums. An equal volume of reagent is added to the soil in the reactor. The reagent is blended with the soil using a stainless steel bladed mixer.

During operation of the system, contaminated reagent is mixed with make-up reagent in the reagent storage tank and recirculated into the reaction vessel containing contaminated soil The reaction vessel is heated

NOTE: Quality assurance of data may not be appropriate for all uses.

(150°C) and the soil and reagent are kept mixed until the reaction is complete. Volatilized material from the bulk storage tank and the reaction vessel are vented through a charcoal adsorption unit. Water vapor is condensed and used as wash water. The reagent is decanted, weighed, and stored for reuse. The soil is washed twice with water to remove excess reagent, and the wash water is held for analysis and possible treatment with activated carbon.

The treated soil is held for analysis. If PCB concentration is greater than 2 ppm, the soil is retreated. QA/QC procedures are not discussed.

PERFORMANCE: It was found that all of the processes assessed have merit. In selecting the most promising ones, a ranking system was used based on the five criteria mentioned in the background section. The processes were ranked comparatively as to the desirability for thorough testing and evaluation. The KPEG process was ranked 5th with a score of 0.58, within a range of scores from 0.49 to 0.62. Laboratory-scale KPEG treatments were applied and there was a reduction of PCB levels to 17.5 ppm by treating the soil 5 hours at 1150 to 120°C. Residual PCBs were qualitatively identified as penta- and hexa-chloro biphenyl. These congeners had been reduced 75 percent and 60 percent, respectively, by the treatment. Galson reported reduction from 1800 to 2.3 ppm by treatment at 150°C for 2 hours.

CONTAMINANTS:

Analytical data is provided in the treatability study report. The breakdown of the contaminants by treatability group is:

Treatability Group	CAS Number	Contaminants
W02-Dioxins/Furans/PCBs	1336-36-3	Total PCBs
	11096-82-5	PCB-1260

NOTE: Quality assurance of data may not be appropriate for all uses.

SUPERFUND TREATABILITY CLEARINGHOUSE ABSTRACT

Treatment Process:	Thermal Treatment - Critical Water Oxidation
Media:	Soil/Generic
Document Reference:	Research Triangle Institute. "PCB Sediment Decontamination Process-Selection for Test and Evaluation," and slide presentation on "Effective Treatment Technologies for the Chemical Destruction of PCB." Approximately 200 pp. Prepared for U.S. EPA, HWERL. May 1987.
Document Type:	EPA ORD Report
Contact:	Dr. Clark Allen Research Triangle Institute P.O. Box 12194 Research Triangle Park, NC 27709 919-541-5826
Site Name:	Guam (Non-NPL)
Location of Test:	Research Triangle Park, NC

BACKGROUND: This document is a report describing the assessment of seven alternative treatment processes that show potential for decontaminating polychlorinated biphenyl (PCB)-contaminated sediments. The processes are KPEG, MODAR Supercritical Water Oxidation, Bio-Clean, Ultrasonics/UV, CFS Extraction, B.E.S.T., and Low Energy Extraction. Each process was evaluated using five criteria: the probability of cleaning sediments to 2 ppm or less; the availability of a test system; the test and evaluation effort required; the time required for future availability of a commercial treatment process; and the probable cost of treatment using the process. The evaluation of the criteria for each process was carried out by engineering analysis of available data and site visits to developers' facilities. This report deals with the evaluation of a critical water oxidation process to destroy PCBs.

OPERATIONAL INFORMATION: The MODAR Supercritical Water Oxidation process utilizes water above critical conditions (374°C and 22.1 MPa) to increase the solubility of organic materials and oxygen to effect a rapid oxidation, destroying organic contaminants. The PCBs are found in a slurry or sludge type material. The report attempts to evaluate systems available from C.F. System and Enseco. However, the source of the bench-scale study is not given, neither are sampling procedures, QA/QC procedures, or conclusions.

PERFORMANCE: It was found that all of the processes assessed have merit. In selecting the most promising ones, a ranking system was used based on the five criteria mentioned in the background section. The processes were ranked comparatively as to the desirability for thorough testing and evaluation. The MODAR supercritical water system was ranked 6th with a score of 0.57, within scores which ranged from 0.49 to 0.62. The destruction efficiency for PCB is given in Table 1.

NOTE: Quality assurance of data may not be appropriate for all uses.

CONTAMINANTS:

Analytical data is provided in the treatability study report. The breakdown of the contaminants by treatability group is:

Treatability Group	CAS Number	Contaminants
W02-Dioxins/Furans/PCBs	1336-36-3	Total PCBs

TABLE 1

WASTE DESTRUCTION EFFICIENCY MODAR/CECOS
DEMONSTRATION ORGANIC WASTE TEST

Contaminant	Feed rate (g/min)	Liquid effluent rate (g/min)	Gaseous effluent rate (g/min)	Destruction efficiency %
PCB	9.1×10^{-2}	$<3.1 \times 10^{-7}$	$<4.4 \times 10^{-6}$	>99.9995

Note: This is a partial listing of data. Refer to the document for more information.

NOTE: Quality assurance of data may not be appropriate for all uses.

RESEARCH TRIANGLE INSTITUTE

September 1987

PCB Sediment Decontamination Processes—Selection for Test and Evaluation

Final Draft

by

Ben H. Carpenter
Research Triangle Institute
Research Triangle Park, NC 27709

Contract No.: 68-02-3992
RTI Project No.: 471U-3065-65

Project Officers: Donald L. Wilson, T. David Ferguson
Hazardous Waste Environmental Research Laboratory
Cincinnati, OH 45268

Hazardous Waste Engineering Research Laboratory
Office of Research and Development
U.S. Environmental Protection Age
Cincinnati, OH

NOTICE

The information in this document has been funded wholly or in part by the United States Environmental Protection Agency under Contract No. 68-02-3992 to the Research Triangle Institute. It has not been subjected to the Agency's peer and administrative review, and it has not been approved for publication as an EPA document. Approval does not signify that the contents necessarily reflect the views and policies of the U.S. Environmental Protection Agency, nor does mention of trade names or commercial products constitute endorsement or recommendation for use.

ABSTRACT

Eight alternative treatments for PCB-contaminated sediments have been assessed as candidates for immediate thorough test and evaluation. The processes are: Basic Extraction Sludge Treatment (B.E.S.T), UV/Ozone or Hydrogen/Ultrasonics Technology, Bio-Clean Naturally-Adapted Microbe, Potassium Polyethylene Glycolate (KPEG), Low Energy Extraction, MODAR Supercritical Water Oxidation, Critical Fluid Systems (CFS) Propane Extraction, and Battelle In Situ Vitrification.

The processes were evaluated using five criteria: the probability of cleaning sediments to 2 ppm or less; the availability of a test system; the test and evaluation effort required; the time required for future availability of a commercial treatment process; and the probable cost of treatment using the process. These criteria were addressed by engineering analysis of available data and site visits to developers' facilities.

The processes were ranked comparatively as to the overall desirability of thorough test and evaluation using all five criteria collectively. Two rating methods were applied: a multiplicative model using a Desirability Function and a linear model, d-SSYS, using weighted utility functions. Both methods converted the process characteristics to ratings on a scale from 0 to 1 (worst to best). The Desirability approach normalized the characteristic using the difference between acceptable and borderline values; d-SSYS normalized the characteristic using the difference between the maximum and minimum values. In calculating the overall score, the factors were weighted equally in the Desirability Function. Probable cost of treatment and test and evaluation effort were assigned weights 4 to 5 times those of the other three characteristics in the d-SSYS ranking. These independent approaches gave final overall desirability scores as follows:

LIST OF ABBREVIATIONS AND SYMBOLS

ABBREVIATIONS

ATCC	American Type Culture Collection
EPA	Environmental Protection Agency
d-SSYS	Computer Model for Rating Alternatives
HWERL	Hazardous Waste Engineering Research Laboratory
USCS	Unified Soil Classification System
DMSO	Dimethyl sulfoxide
PEG	Polyethylene glycol
PCP	Pentachlorophenol
CF Systems	Critical Fluids Systems
B.E.S.T.	Basic Extraction Sludge Treatment
RCC	Resources Conservation Company
TEA	Triethylamine
CST	Critical Solution Temperature

SYMBOLS

Btu	British thermal unit
m^3	cubic meter
gal	gallon
kJ	kilojoule
kWH	kilowatt hour
lb	pound
MPa	mega pascal
mt	metric ton
TRUs	transuranics

UNIT CONVERSIONS

1 atmosphere = 0.098066 MPa

1 Btu = 1.05587 kJ

1 Btu/lb = 2.326 kilojoule per kilogram

1 Btu/min = 0.023575 hp

1 cal (20°C) = 4.1819 joule

1 centistoke = 1 centipoise/density of liquid

1 cu ft = 7.4805 gal

1 cu ft = .028317 m^3

1 foot-lb = 3.7662×10^{-7} kilowatt-hours

1 (ft-lb)/min = 3.0303×10^{-5} hp

= 2.2597×10^{-5} kilowatts

1 gallon = 3.7854 liters

1 gallon = 0.0037854 m^3

1 horsepower (hp) = 0.7457 kilowatt

1 joule = 2.77778×10^{-7} kWH

1 kg cal. = 3.9685 Btu

1 kJ = 0.94709 Btu

1 kilowatt-hr = 3.6×10^6 joules = 3.6×10^3 kJ

1 liter = 0.035316 cu ft

1 lb = 0.45359 kg

1 lb/in^2 = 0.0068948 MPa

1 lb/in^2 = 0.068046 atmospheres

R = 8047.2 (kgf x m/°K)

CONTENTS

SECTION	PAGE
NOTICE	ii
FORWORD	iii
ABSTRACT	iv
LIST OF ABBREVIATIONS AND SYMBOLS	vi
UNIT CONVERSIONS	vii
LIST OF TABLES	xii
LIST OF FIGURES	xv
ACKNOWLEDGEMENTS	xvii
SECTION 1 INTRODUCTION	1
1.1 BACKGROUND	1
1.2 PURPOSE	1
1.3 APPROACH	2
SECTION 2 CONCLUSIONS	4
SECTION 3 TECHNICAL ASSESSMENT	6
3.1 RANKING CRITERIA	9
3.1.1 Standard for Acceptable Cleanup of PCBs	9
3.1.2 Probable Cost of Treatment After Performance is Proven	10
3.1.3 T and E Effort Required	12
3.1.4 Availability of a System for Test	17
3.1.5 Likely Future Commercial Availability of the Process	17
3.2 EFFECT OF DIFFERENCE IN SEDIMENTS ON THE TREATMENT PROCESS	17
3.3 BASIC EXTRACTION SLUDGE TREATMENT (B.E.S.T.) PROCESS, RESOURCES CONSERVATION COMPANY	26
3.3.1 Availability of System to Test	26
3.3.2 Process Description	26
3.3.3 Information from Prior Studies	30
3.3.4 Field Tests	32
3.3.5 Additional Data Needs	41
3.3.6 Probable Cost of Treatment After Demonstration	44
3.3.7 Environmental Characteristics	47
3.3.8 Health and Safety Characteristics	47
3.3.9 When Process Can Be Made Available	47

CONTENTS (cont.)

SECTION		PAGE
3.7	LOW ENERGY EXTRACTION PROCESS BY APPLIED SCIENCE DEPARTMENT OF NEW YORK UNIVERSITY	88
3.7.1	Availability of System for Test	88
3.7.2	Process Description	89
3.7.3	Information from Prior Studies	91
3.7.4	Additional Data Needs	93
3.7.5	Probable Cost of Treatment After Demonstration	100
3.7.6	Environmental Characteristics	102
3.7.7	Health Characteristics	104
3.7.8	When Process Can Be Made Available	104
3.8	SUPERCRITICAL WATER OXIDATION PROCESS, MODAR, INC.	104
3.8.1	Availability of System for Test	104
3.8.2	Process Description	105
3.8.3	Information from Prior Studies	107
3.8.4	Pilot and Field Tests	107
3.8.5	Additional Data Needs	113
3.8.6	Probable Cost of Treatment After Demonstration	115
3.8.7	Environmental Characteristics	119
3.8.8	Health Characteristics	120
3.8.9	When Process Can Be Available	120
3.9	PROPANE EXTRACTION PROCESS, CRITICAL FLUID SYSTEMS (CFS)	120
3.9.1	Availability of System to Test	120
3.9.2	Process Description	121
3.9.3	Information from Prior Studies	123
3.9.4	Field Tests	124
3.9.5	Additional Data Needs	124
3.9.6	Probable Cost of Treatment After Demonstration	126
3.9.7	Environmental Characteristics	128
3.9.8	Health and Safety Characteristics	128
3.9.9	When Process Can Be Made Available	128

LIST OF TABLES

TABLE		PAGE
1	INITIAL SCREENING OF TREATMENT PROCESSES	7
2	HUDSON RIVER SEDIMENT CHARACTERISTICS	13
3	HUDSON RIVER SEDIMENTS GRAB SAMPLES PROPERTIES	14
4	HUDSON RIVER SEDIMENTS, METAL CONCENTRATIONS AND PCB CONTENT	15
5	UNIFIED SOIL CLASSIFICATION SYSTEM	25
6	BASIC EXTRACTION SLUDGE TREATMENT (B.E.S.T.) PROCESS PCB-CONTAMINATED SOIL COMPOSITION ANALYSIS	30
7	BASIC EXTRACTION SLUDGE TREATMENT (B.E.S.T.) PROCESS PCB-CONTAMINATED SOIL MULTIPLE EXTRACTION WITH TEA	32
8	BASIC EXTRACTION SLUDGE TREATMENT (B.E.S.T.) PROCESS FIELD TESTS, SUMMARY OF TYPES OF ANALYSES OF SITE SAMPLES	35
9	FEED STOCK COMPOSITIONS, TESTS OF BASIC EXTRACTION SLUDGE TREATMENT PROCESS	37
10	BASIC EXTRACTION SLUDGE TREATMENT (B.E.S.T.) PROCESS COMPONENTS TESTING, ANALYSIS OF SOLIDS PRODUCTS	38
11	BASIC EXTRACTION SLUDGE TREATMENT (B.E.S.T.) PROCESS COMPONENTS TESTING, ANALYSIS OF TREATED PROCESS WATER EFFLUENT	39
12	BASIC EXTRACTION SLUDGE TREATMENT (B.E.S.T.) PROCESS COMPONENTS TESTING, ANALYSIS OF OIL PRODUCT	40
13	SAMPLES/ANALYSES FOR BASIC EXTRACTION SLUDGE TREATMENT (B.E.S.T.) PROCESS, PRELIMINARY TESTS	45
14	SAMPLES/ANALYSES FOR BASIC EXTRACTION SLUDGE TREATMENT (B.E.S.T.) PROCESS, PILOT TESTS	46
15	COST ESTIMATE FOR BASIC EXTRACTION SLUDGE TREATMENT (B.E.S.T.) PROCESS	48
16	SAMPLES/ANALYSES FOR UV/OZONE OR HYDROGEN/ULTRASONICS TECHNOLOGY	56
17	CAPITAL COST ESTIMATE FOR UV/OZONE/ULTRASONICS TREATMENT	58

LIST OF TABLES (cont.)

TABLE		PAGE
36	COST ESTIMATES, CF SYSTEMS ORGANIC EXTRACTION SYSTEM	129
37	SAMPLES/ANALYSES BATTELLE IN SITU VITRIFICATION PROCESS, DEMONSTRATION TESTS	135
38	WHOLE BODY RADIATION DOSES FROM ROUTINE OPERATIONS	142
39	PUBLIC DOSE COMMITMENTS FROM ROUTINE OPERATIONS	142
40	OCCUPATIONAL DOSES FROM ACCIDENTAL RELEASES	143
41	PUBLIC DOSE COMMITMENTS FROM POSTULATED ABNORMAL OCCURRENCES	143
42	ACCEPTABLE AND BORDERLINE VALUES FOR PROCESS CHARACTERISTICS	145
43	OVERALL DESIRABILITY OF IMMEDIATE T AND E OF THE EIGHT CANDIDATE PROCESSES	147
44	SCALED RATINGS OF EIGHT TREATMENT PROCESSES	150
45	DETERMINISTIC SCORES FOR TREATMENT PROCESSES	152

LIST OF FIGURES

FIGURE		PAGE
1	Basic Extraction Sludge Treatment (B.E.S.T.) process, components test unit	27
2	Basic Extraction Sludge Treatment (B.E.S.T.) process, large-scale skid-mounted unit	28
3	Basic Extraction Sludge Treatment (B.E.S.T.) process flow diagram, showing optional countercurrent extractor	29
4	Site map for Basic Extraction Sludge Treatment (B.E.S.T.) process cleanup of PCB-contaminated sludges	33
5	UV/Ozone/Ultrasonics process flow diagram	50
6	Schematic of Bio-Clean Naturally-Adapted Microbe process as applied to sediments	62
7	Typical pentachlorophenol decay rates vs. time	64
8	Typical PCP decay curve, concentration of pentachlorophenol vs. time	65
9	Schematic of KPEG with DMSO process	76
10	Schematic of scaled-up KPEG with DMSO process	85
11	Preliminary material balance and flow diagram	90
12	Solvent leaching of PCBs from Waukegan Harbor sludge	92
13	Horizontal belt filter	95
14	GREERCO continuous counter-current contactor	96
15	Schematic of the MODAR Supercritical Water Oxidation process	106
16	Schematic of MODAR Supercritical Water Oxidation process as applied to liquid wastes	108
17	MODAR Supercritical Water Oxidation process demonstration plot plan	109
18	Schematic showing major components of the MODAR pilot unit	111

ACKNOWLEDGMENTS

The contributions, guidance, and advice provided by the EPA Technical Project Managers, Donald L. Wilson, T. David Ferguson, and by Charles J. Rogers, Chief of Chemical and Biological Staff, are gratefully acknowledged. Dr. Albert J. Klee, Chief of Chemical Biological Detoxification Branch, provided valuable contributions concerning process rating methodology. Dr. John Glaser provided helpful input to the information on biological treatment processes. At RTI, Robert Truesdale and Paula Hoffman contributed to the discussion of the effects of soil and sediment types on the performance of treatment processes. Dr. Clark Allen provided input and assisted in the format of the section on process rating. Dr. J. J. Spivey provided constructive review of the report.

The developers of the process described herein contributed performance data, process flow sheets, and cost information without which an assessment would not have been possible. Their contributions are also gratefully acknowledged and are referenced throughout the report.

SECTION 1

INTRODUCTION

1.1 BACKGROUND

The PCB-contaminated sediment problems in New Bedford, Massachusetts (EPA Region I) in New York State (EPA Region II) and in Waukegan, Illinois (EPA Region V) are reported to be the worst in the nation in terms of PCB concentration and the total quantity of PCBs present. In addition, there are numerous industrial lagoons with large quantities of PCB contaminated sediments. The dredging of the sediments for decontaminating harbors, rivers, and lagoons is unacceptable without effective disposal/treatment methods for PCB contaminated sediments.

EPA Regional Offices are being asked to comment on the technical and economic feasibility of chemical/biological processes for clean-up of these sediments and sludges. The Regional Offices do not have adequate data to recommend any of a number of processes proposed or being tested/evaluated for the decontamination of sediments containing PCBs.

In the first phase of evaluation, the Research Triangle Institute identified eight candidate treatment processes which showed potential as alternatives to chemical waste landfill and to incineration. Seven of these required further test and development. Some had been tested using soils, but none had been tested specifically on PCB-contaminated sediments. The sediments of concern differ from soils in several properties that influence the performance of unit operations involved in the treatment processes. The details of this study are presented in the published project report entitled "PCB Sediment Decontamination: Technical/Economic Assessment of Selected Alternative Treatments" (NTIS Number PB87-133 112/AS).

1.2 PURPOSE

The purpose of this study is to establish suitable factors for further assessment of the candidate processes that have been identified, to review these processes against these factors and identify additional data needs, and to provide a basis for the selection of three processes for a defensible.

The probable cost of treatment after demonstration and approval of the process was determined from vendor-supplied information or our own estimates. Cost elements given include: capital, energy, labor, maintenance, process quality control and testing. The capital cost is recovered over the 2.5 years of projected operation. Labor and profit/contingency are estimated at uniform rates for all processes for purposes of comparative evaluation.

Environmental and health characteristics assessed include all process feed and waste streams, reagents, and operating hazards.

The lapsed time required to demonstrate process performance, then to design, construct and check out a full-scale process is projected, based on needs for additional data and requirements of the developers.

The projection is based on the conduct of treatment system tests at conditions determined in laboratory tests, with sampling and analysis of process feed and exit streams. Additional testing for engineering design data has been added as prescribed by the developer. The design and construction time for a full-scale unit, estimated by the developer, is shorter for those processes with unit operations that have previously been scaled to the size necessary for cleanup of 152,000 m^3 of contaminated sediment per year. Where the need exists to establish a basis for size of unit not known to be in existence and demonstrated, the needed time is increased, up to six months.

The processes are compared and rated using the results of the assessment. Based on composite ratings, three processes showing the highest rating are recommended for immediate test and evaluation (Section 4).

SECTION 2

CONCLUSIONS

Eight emerging treatment processes for decontamination of PCB-contaminated sediments have been evaluated as candidates for thorough test and evaluation (T and E) using a test system judged of sufficient size by the developer to provide performance, cost, and scaleup data for a large commercial plant. The processes assessed include: Basic Extraction Sludge Treatment (B.E.S.T); Bio-Clean Naturally-Adapted Microbe; Critical Fluid Systems Propane Extraction; Potassium Polyethylene Glycolate, Galson; Low Energy Extraction, New York University; MODAR Supercritical Water Oxidation; UV/Oxone or Hydrogen/Ultrasonics Technology; and Battelle In Situ Vitrification.

The processes were evaluated using as criteria:

- The probability of cleaning sediments to $\leq$2 ppm PCBs;
- The probable cost of treatment;
- The relative level of Test and Evaluation effort to be supported by EPA;
- The availability of a processing system to test; and
- The likely future commercial availability of the process.

While all the processes except perhaps In Situ Vitrification merit further development for treatment of sediments, comparative simultaneous evaluation of their ratings on a scale of 0 to 1 gave the following results:

	Relative Desirability of Thorough Test and Evaluation	
Process	Desirability score	d-SSYS score
Basic Extraction Sludge Treatmen , Resources Conservation Company	0.623	0.8127
UV/Ozone or Hydrogen/Ultrasonics Treatment, Ozonic Technology, Inc.	0.621	0.8010
Naturally-Adapted Microbes Process, Bio-Clean, Inc.	0.617	0.7583

SECTION 3

TECHNICAL ASSESSMENT

This section describes the development of criteria for ranking the processes, discusses the characteristics of soils and sediments as they relate to the application of treatment processes, and describes each process assessment.

The Phase 1 study screened 64 process technologies and selected eleven for assessment. The eleven processes assessed were: KPEG, O.H.M. Methanol Extraction, Advanced Electric Reactor, EPRI (Acurex) Solvent Wash, Bio-Clean, Vitrification, LARC, MODAR Supercritical Water Oxidation, Soilex Solvent Extraction, Sybron Bi-Chem 1006 PB, and Composting. The assessment showed the first eight of these to have potential for reduction of PCB concentrations to the desired background levels (1 to 5 ppm) or less, with minimal environmental impacts and low to moderate cost. All of the eight except the Advanced Electric Reactor require further development and testing.

The Soilex Solvent Extraction, Sybron Bi-Chem 1006 PB, and Composting processes ranked lowest in overall desirability and were dropped from further consideration.

The seven candidate processes that required further development and testing (KPEG, O.H.M. Methanol Extraction, EPRI (Acurex) Solvent Wash, Bio-Clean, Vitrification, LARC, and MODAR Supercritical Water Oxidation) were screened at the start of the Phase 2 study for availability of a continuing developer and a treatment system for use in test and evaluation of the process. The results of this screening are given in Table 1. Three processes were eliminated from further consideration. The Solvent Wash process is not available for assessment because its sponsor, the Electric Power Research Institute, is seeking a firm to undertake the further needed development of the process before it is ready for further consideration. The developer of the OHM Extraction process has chosen not to invest in this process. The developer of the LARC process has not identified sufficient markets and the process is not available from them.

Meanwhile, four technologies not assessed in the Phase 1 study have become available: the Basic Extraction Sludge Treatment (B.E.S.T.) process; the

TABLE 1. (Continued)

Process	Contact	Continuing Developer	Test System(s) Available
LARC	George Anspach Atlantic Research Corporation 5390 Cherokee Avenue Alexandria, VA 22312	~~No~~ Yes	~~No~~ Yes
Basic Extraction Sludge Treatment	Mark Tose Resources Conservation Co. 3101 N.E. Northup Way Belleview, WA 98004 (206) 828-2376	Yes	Yes
CF Systems Propane Extraction	Thomas J. Cody, Jr. CF Systems Corporation 25 Acorn Park Cambridge MA 02140 (617) 492-1631	Yes	Yes
Ultrasonics/UV Technology	Edward A. Pedzy Ozonic Technology, Inc. 90 Herbert Avenue P. O. Box 320 Closter, NJ 07624 (201) 767-1225	Yes	Yes
Low Energy Extraction Process	Walter Brenner/Barry Rugg New York University Dept. of Applied Science 26-36 Stuyvesant Street New York, NY 10003 (212) 598-2471	Yes	Planned

[d]This process was identified as the Acurex process in the Phase 1 study.

These levels (10 ppm, 25 ppm, and 50 ppm) are to be attained by removing all contaminated soil exceeding these levels. The removed soil is subject to disposal regulations: cleanup to <2 ppm. For this reason, permits issued for alternative destruction processes generally will require that all treated materials and by-product waste streams must have PCB concentrations of less than 2 ug/g resolvable chromatographic peak (2 ppm). If this condition is not met, the effluents containing 2 ppm or greater must be disposed as if they contained the PCB concentration of the original influent material. (Neulicht, 1986). If the PCB feed material being treated by the process is over 50 ppm PCB, then the resulting effluents must be incinerated unless an analysis is conducted and indicates that the PCB concentration is below 2 ppm per PCB peak.

In accordance with these policy and treatments requirements, we have selected $\leq$ 2 ppm PCB as the standard of cleanup for alternative treatments.

3.1.2 Probable Cost of Treatment After Performance is Proven

The probable cost of treatment is presented as the cost per cubic meter of sediment treated, based on a system sufficiently large to process 380,000 m^3 of Hudson River sediments in 2.5 years. By foeusing on a specific site and size of cleanup task, each process could be assessed using data from the same feed materials, and comparative cost estimates for a specific application could be obtained. The sediments from the Hudson River also meet the requirement for use of a variety of soil/sediment types in testing PCB-treatment processes (Section 3.2).

Treatment process requirements determined capital, energy, and maintenance costs. Labor rates, overhead, contingency, profit, and health and safety were costed uniformly for all processes.

Since no full-scale systems exist for the processes under assessment, capital costs were estimated by designing a full-scale system in collaboration with the developer utilizing the data available as a basis. Equipment costs were then obtained as planning estimates from manufacturers or developers, or estimated using the method of exponents:

$$C_i = C_1 \ (Q_i/Q_1)^n$$

3.1.3 T and E Effort Required

The test and evaluation effort required has been estimated based on a comparison of available process data with the requirements for thorough test and evaluation. A checklist of information requirements was developed to identify the data categories to be supplied to qualify the processes for a permit to test. The checklist, Appendix A, identifies the following information as basic to assessment of each process:

1. Waste characteristics;
2. Process engineering description;
3. Sampling and monitoring plan;
4. Accident and spill prevention and countermeasure; and
5. Demonstration test plan.

For these assessments, Hudson River sediments were selected as the characterized wastes.

Hudson River sediment material has been classified according to its content of clay, silt, muck, muck and wood chips, sand, sand and wood chips, coarse sand, and coarse sand and wood chips (Tofflemire and Quinn, 1979). Sediments have been shown to range from clay to cobbles, with the largest mass fraction being sand.

The coarse fraction (>0.42 mm) of the sediments, sampled and characterized by Normandeau Associates, Inc. (NAI), typically contained wood chips, sawdust, shale chips, cinders, and coal fragments. The fine size fractions contained some fragments of the above, plus sand (containing quartz and feldspar), silt, clay, and organic material.

The highest PCB concentration was the muck with wood chips class, which typically had over 30 percent silt and clay, high volatile solids and some small but visible wood chips. The size lowest in PCB was medium sized sand or gravel without wood chips.

Table 2 shows the characteristics of a representative sample, portions dried overnight at 60 °C and 100 °C and sieved. Additional sediment characteristics, including metals analyses, are shown for four selected grab samples in Tables 3 and 4.

TABLE 3. HUDSON RIVER SEDIMENTS GRAB SAMPLES PROPERTIES

Sample Number	Sp. Gr.	Bulk gm/cc	Texture primary/ secondary	Volatile solids %	>2 mm %	2-0.074 mm, %	<0.074 mm, %
25	2.4	0.44	muck & fine wood chips/ coarse sand	17.4	19	51	30
26	2.35	0.74	muck, find sand/ silt	9.3	0.5	59.4	40.1
27	2.83	1.26	sand & wood chips/ silt	4.4	25.0	69.0	5.9
29	2.06	0.78	coarse sand & wood/ sand	13.5	38.7	61.0	0.3

Reference: Tofflemire and Quinn, 1979.

PCB concentration was positively correlated with Cs137, lead, and volatile solids, and negatively correlated with total solids. The parameter most highly related to PCB was Cs137, but the simplest field test to relate to PCB was total solids. Equations developed from core-sample data are:

$$\log PCB = 1.494 + 1.4 \log Cs, \; R = 0.82$$

and

$$\log PCB = 2.56 - 0.009 \text{ (total solids)}, \; R = -0.67.$$

The equation for total solids explained approximately 40 percent of the total variance in log PCB concentration. However, the large confidence intervals about the mean preclude the use of this equation, or other equations developed, as good predictors of resultant PCB values.

Process engineering descriptions were developed for each process assessed. These vary in completeness because the processes vary in stage of development from conceptual (Section 3.4) to field tested (Section 3.3). For example, some processes will require tests to determine material and energy balances; others to confirm estimated balances and cleanup performance.

While unit operations have been identified and described for all processes, the descriptions are based only on performance requirements. Detailed equipment specifications have not been made, except where necessary to obtain cost estimates (e.g., high pressure compression and slurry pumps).

The descriptions include process flow diagrams and identify all product and waste streams. Additional process information includes summaries of bench tests, pilot tests, and field tests, if available.

Sampling and monitoring plans are given, based on the scale of process tests required, the purposes of the tests, and the extent of data needed to characterize the process performance and scaleup the system to full-scale. Some of the processes, when the developers' prior experience justifies it, can be scaled-up from bench-scale tests. Thus the size of system indicated for T and E is the size the developer feels can be scaled-up with confidence. For the needed tests, the extent of sampling and analyses is indicated. Methods of analysis are specified and their costs estimated.

Accident and spill prevention and counter-measures needs have been identified. Part of the estimated cost is allocated to these factors.

Sediments exist in many types ranging from hard, dense, large pieces of rock through gravel, sand, silt, and clay to organic deposits of soft compressible peat. All of these materials may occur over a range of densities and water contents. A number of different sediment types may be present at any given site, and the composition may vary with depth over intervals as little as a few inches.

Soils have been classified as zonal, intrazonal, and azonal in efforts to organize their morphology relative to a particular set of soil forming factors (Mitchell, 1976). Zonal soils are characterized by the dominating influence of climate. If climatic conditions are reasonably uniform and continuous and erosion is not too rapid, then soils from similar climates become alike regardless of parent materials. Intrazonal soils are associated with zonal soils but reflect the influence of some local conditions (e.g., poor drainage, alkali salts, etc.). Azonal soils are soils without profile development. There is little or no alteration of the parent material because of their youth or environmental setting.

Sediments are soil and rock debris that have been transported and deposited away from their zones of formation, being carried by streams, currents, winds, ground water, and glaciers, and (in the case of lagoons) by transport of solid and waste material. A broad definition of sediments, from the point of view of hazardous wastes, is any solid or sludge under water. Sediments have been classified geographically because the environment of deposition is important in determining their properties. The environment determines the complex of physical, chemical, and biological conditions under which a sediment accumulates and consolidates. These conditions can be important in creating the sediment's characteristics. Effects of transportation on sediments include size reduction, shape and roundness, surface texture, and sorting. The method of deposition can also affect the sediment characteristics. Deposition by slow settling tends to create a more consolidated and well sorted deposit, whereas rapid deposit where a stream moves into a larger body of water may create a poorly sorted, unconsolidated deposit. The main types of sediments are terrestrial (above tidal reach), mixed continental and marine, and marine (below tidal limits). Sediments can contain components

The sediment characteristics most useful in determining a behavior under cleanup are particle size distribution, mineralogy, organic and clay content, water content, permeability, elemental composition (including heavy metals), alkalinity, pH, Atterberg limits, cohesion, electrical conductivity, shrink/swell potential, cation exchange capacity, surface chemistry, and total cations. These characteristics are important for making sure that soils/sediments used in testing of PCB destruction processes are or are not the same between processes and between process efficiencies.

The characteristics that may turn out to have the most influence on PCB retention and removal are particle size distribution, clay content, and minerology. Mitchell (1976) states that the greater the quantity of clay mineral in a soil or sediment, the higher the plasticity, the greater the potential shrinkage and swell, the lower the permeability, the higher the compressibility, the higher the true cohesion, and the lower the true angle of internal friction. Surface forces and their range of influence are small relative to the weight and size of silt and sand particles; whereas, the behavior of small and flaky clay mineral particles is strongly influenced by surface forces. Only a maximum of about one-third of the soil solids need be clay in order to have a condition where the clay is likely to dominate the behavior by preventing direct interparticle contact of the granular particles. There is a tendency for clay particles to coat the granular particles in many sediments, possibly causing the clay to exert a significant influence on properties at even a lower content. Clay mineralogy is important due to the extreme changes in properties created by the presence of montmorillonite versus illite, chlorite, or kaolinite for example. The presence of a Ca-montmorillonite provides a soil with an enormous shrink/swell potential as compared to kaolinite which has very little shrink/swell potential.

Sposito (1984) interprets surface phenomena from the point of view that the adsorbing solids are inorganic and organic polymers bearing surface functional groups whose reactivity determines the adsorptive characteristics.

The solid phases that exhibit surface activity in soils are to be found primarily in the clay and organic fractions. The most important structural units in the inorganic polymers found in clays are the silica tetrahedron SiO_4^{4-} and the octahedral complex MX_6^{m-6b} comprising a metal cation, M^{m+}, and six anions, X^{b-}. Both of these units can polymerize to form sheet structures.

If, on the other hand, isomorphic substitution of Si^{4+} by Al^{3+} occurs in the tetrahedral sheet, the excess negative charge can distribute itself primarily over just the three surface oxygen atoms of one tetrahedron, and much stronger complexes with cations and dipolar molecules become possible because of this localization of charge.

Inorganic hydroxyl groups occur exposed on the outer periphery of phyllosilicates, amorphous silicate minerals, metal oxides, oxyhydroxides, and hydroxides. These groups commonly occur coordinated to one, two, or three metal cations. For example, three types of OH groups are found on the surfaces of the mineral goethite: OH groups coordinated with one, two, or three Fe^{3+} cations. The first can be protonated to form a Lewis acid site and then exchanged to allow the formation of an inner-sphere complex with the HPO_4^{2-} ion. The OH in the o-phosphate unit and the oxygen ions coordinated to the Fe^{3+} cations are hydrogen-bonded to the goethite surface.

When phyllosilicate crystallites are broken apart, singly coordinated OH groups are exposed on the new edge surfaces. On some mineral surfaces (e.g., kaolinite), Al(III) • H_2O, a Lewis acid, is found at the edge of the octahedral sheet. The hydroxyl group associated with the site can form a complex with a proton at a low pH or with an hydroxide anion at a high pH. Also, at a high pH, the water molecule bound to the Al^{3+} cation can be expected to be replaced by an hydroxide anion. In contrast to the coordinated Al(III), OH groups at the edge of the tetrahedral sheet are singly coordinated to Si^{4+} cations. Because of the greater valence of the silicon, these OH groups tend to complex only hydroxide ions.

Some of the organic functional groups present in the compounds that polymerize to form the humic substances in clays would likely ultimately reside on the interfaces between solid organic matter and the fluid phases in sediments. The more prominent organic surface functional groups in well oxidized soils are carboxyl, carbonyl, and phenylhydroxyl groups. The stabilities of complexes between these key groups and protons range from weak (uncharged carbonyl) to very strong (phenolic OH, which does not ionize until about pH 9). For this reason, it is entirely conceivable that the properties of organic surface functional groups are not well defined, but instead can be characterized only by a range of values.

been determined, then the extreme or optimum conditions can be tested at pilot scale. In order to choose sediment types, a sediment classification system similar to one used for soils, must be developed. The "Unified Soil Classification System" (USCS) was developed in 1952 as a modification of Professor Casagrande's Airfield Classification System (U.S. Department of Interior Earth Manual, 1974). This system takes into account engineering properties of the soils and can be used on field soils or soils mixed in a laboratory. The system is based on the size of the particles, the amounts of various sizes, the characteristics of the very fine grains, plasticity, and compressibility. USCS divides soils into three major groups: coarse-grained soils, fine-grained soils, and highly organic (peaty) soils (see Table 5). Using particle size, sediments can be classified with this system.

The range of sediments of most probable importance to this study will be the sands, silts, and clays. Possibly a gravel should be tested in order to confirm its effect on the PCB destruction process. Sediments of smaller grain size will probably be the most difficult to remove PCBs from in extraction processes. Other characteristics of the sediments themselves, in combination with process characteristics will affect the processes. Therefore, setting up a matrix with the most probable characteristics of importance for a given process, and selecting sediments representative of these conditions would be necessary for testing. Another method of obtaining representative sediments would be to obtain the components with the chosen characteristics and mix them by hand in the lab. Use of natural sediments may provide more real results, whereas use of prepared sediments will provide more control in the testing process.

It is not anticipated that sufficient data will be made available to show the effects of sediment type on treatment rate constants, or even to measure these constants. These concepts of sediment behavior will, however, help considerably to identify the data needs and further experimental work needs for the processes to be assessed. The summary of characteristics given here focuses on those that may serve to distinguish hard to treat sediments from easy to treat sediments. The theory helps in identifying the different types of sediments that should be included in a test and evaluation program. It helps explain the need to identify in a laboratory the removal rates which a given sediment dictates so that field testing of the processes can be planned accordingly.

3.3 BASIC EXTRACTION SLUDGE TREATMENT (B.E.S.T.) PROCESS, RESOURCES CONSERVATION COMPANY

3.3.1 Availability of System to Test

The Basic Extraction Sludge Treatment (B.E.S.T.) process has been developed by the Resources Conservation Company (RCC) of 3101 N.E. Northup Way, Bellevue, Washington 98004. The company was founded in 1968 and is a subsidiary of Reading and Bates. The process uses a solvent having an inverse critical solution point in water to remove water and oily material from solid matter (U.S. Patents 3899419, 3925201, 4002562, and 4056466). It has been applied to clean up PCB-contaminated oily sludges at a CERCLA site (General Refining Site, Savannah, Georgia).

The company has bench units to perform glassware simulations of the process, required to establish parameters for its application to a particular sediment. The company also has a test system sufficiently large to process 91 kg of sediment feed in seven days (Figure 1), and a large-scale skid mounted unit designed to process 91 metric tons per day (24 hours) of feed (Figure 2).

3.3.2 Process Description

The process is described generally as it is applied to PCB-contaminated sediment, sludge, or other feed material containing solid matter, oily contaminants, and bound and unbound water. The feed is first pretreated with an alkaline composition, then admixed with triethylamine (TEA) while cooling below the critical solution temperature (CST). A single liquid phase is formed from which the solid matter is separated. The liquid is then heated to a temperature above the CST, to form an amine phase and a water phase, after which the water phase is decanted from the amine phase. The amine phase contains substantially all of the oily material including organic contaminants. It is processed to recover the oil and contaminants, and the TEA is recycled for the processing of additional feed material. The pretreatment of the feed with an alkali reduces substantially the amount of residual amine carried over into the solid and water products.

Figure 3 shows a process flow diagram for the full-scale unit, with two-stage extraction added as an addable option to the operations available on the full-scale unit. The number of stages can be increased if necessary. The feed sludge or sediment with free water is mixed with TEA in a mixer designed

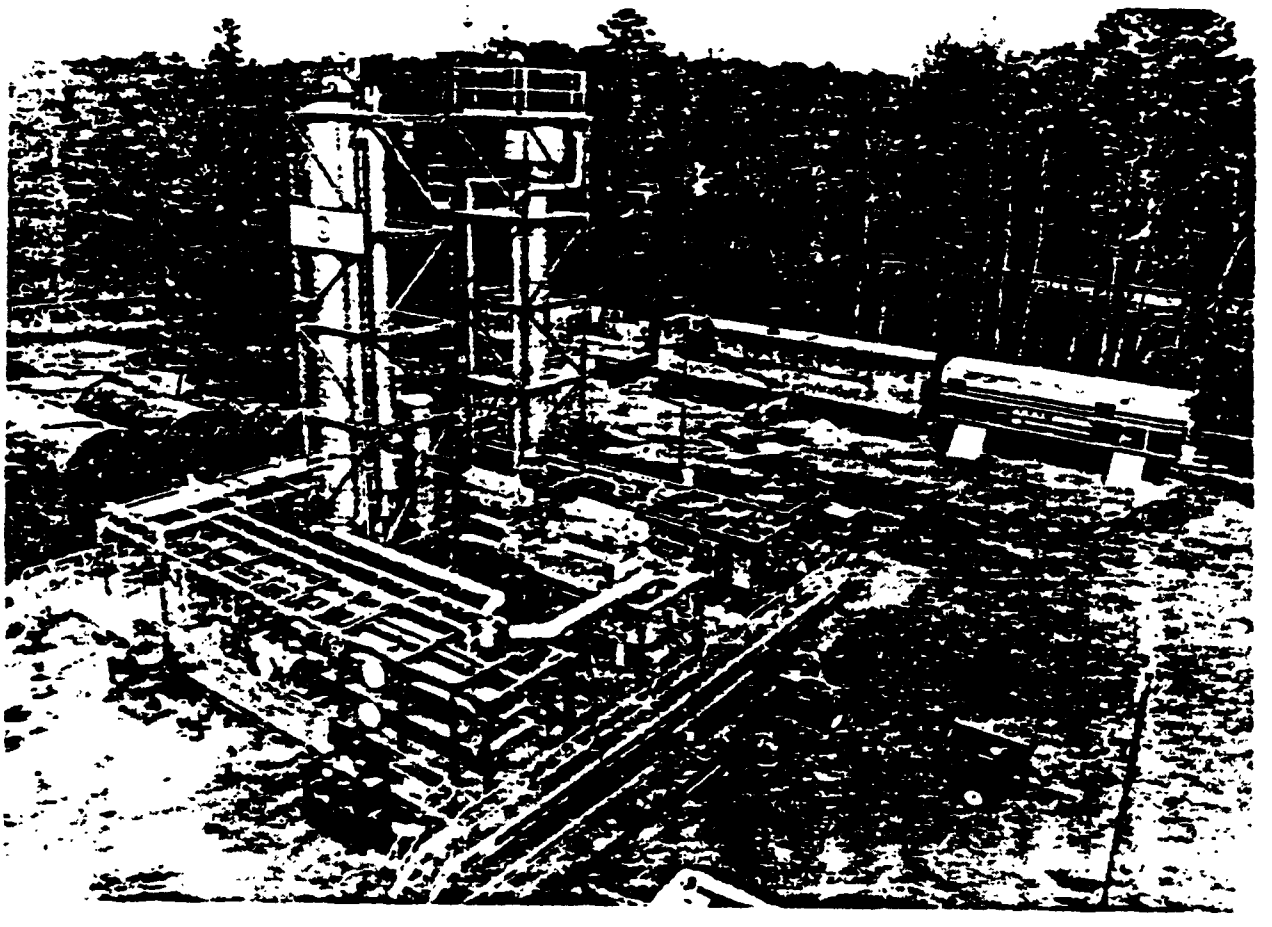

Figure 2. Basic Extraction Sludge Treatment (B.E.S.T.), large-scale skid-mounted unit (Resources Conservation Company).

using the settling characteristics of the sediment. The ratio of TEA to the sediment feed must be high enough for all of the bound and unbound water in the solid matter to be completely mixable in a single phase at or below a predetermined temperature, and may range from 1 to 7 parts by weight TEA to 1 part by weight of water.

The mixture is then mechanically separated, by centrifuging, into a solids fraction and a liquid fraction containing the TEA, oil, contaminants, and substantially all of the water.

The liquid fraction is heated, usually to 60 °C or higher, whereupon the liquid forms an oil/solvent phase and a water phase. The former contains most of the oil and contaminants. The two phases are separated by decantation.

The TEA is recovered from the oil/solvent fraction by flash evaporation, countercurrent steam stripping, and heating of the oil residues containing the oil-soluble contaminants to remove water. TEA is also removed from the water layer by flash evaporation and steam stripping. Recovered TEA is chilled and recycled.

The separated solids are subjected to one or more additional extractions with TEA, after which they are separated by centrifuging, and dried to remove any residual TEA.

3.3.3 Information from Prior Studies

RCC conducted preliminary tests of the application of B.E.S.T. treatment to samples of a PCB-contaminated soil supplied by EPA Region 10 (RCC, 1986). The composition of the contaminated soil is shown in Table 6. The B.E.S.T. treatment was applied as described below.

TABLE 6. BASIC EXTRACTION SLUDGE TREATMENT (B.E.S.T.) PROCESS PCB-CONTAMINATED SOIL COMPOSITION ANALYSIS

Component	wt. %
Oil	1.5
Water	11.0
Solids	87.5
PCBs (mg/kg)	1500[a]

[a]Total sample basis. RCC data.

TABLE 7. BASIC EXTRACTION SLUDGE TREATMENT (B.E.S.T.) PROCESS PCB-CONTAMINATED SOIL MULTIPLE EXTRACTION WITH TEA

Soil extraction number	Residual PCB, Concentration, mg/kg
1	310
2	93
3	35
4	53
5	63
6	19
7	32
8	22
9	19
10	20
>50 (Soxlet extraction of raw sample with TEA)	23
Recovered Oil	598,000

Reference: Resources Conservation Co.

3.3.4 Field Tests

The B.E.S.T. process has just been field tested at the General Refinery site near Savannah, Georgia. The CERCLA site cleanup was completed March 6, 1987. PCB-containing oily wastes and sludges from an oil-recycling plant were cleaned up using the 91 metric ton per day unit (Figure 2). In preparation for the cleanup, samples collected by RCC, Weston, and Haztech were used to characterize all materials onsite (RCC, 1986).

Figure 4 shows a site map prepared by Roy F. Weston, Inc. to identify the locations of samples. Barrel samples of sludge and any free water were taken from four lagoons located on the site. Lagoon 1 was shallow and lacked the free water layer found in the other ponds. Core sediment samples were taken in the vicinity of the barrel sample locations. Samples of site well water, oil tanks, and several soil core samples adjacent to the ponds were also taken. Filter cake samples were taken from the solids piles labeled GRSC#1 and 2 on the site map.

From these samples, the following were selected as representative of feed stocks to the process and were subjected to B.E.S.T. glassware simulation testing (Phase 1 testing):

Pond 1, Ponds 2-4 surface, Ponds 2-4 subsurface, Ponds 2-4 surface and free water in proportionate quantifies, Filter Cake, Back filled lagoon, and Ponds 1-4 sediment.

3.3.4.1 Phase 1, Simulations--

The laboratory glassware testing involved extraction of oil and water and removal of particulate solids by repeated centrifugation/decantations with TEA. The solids obtained were dried at 105 °C. The oil/water/TEA extract was then heated and decanted to effect separation of the aqueous fraction from the solvent/oil fraction. After separation, each fraction was steam stripped using a Buchi roto-evaporator apparatus with steam injection into the flask contents.

The resulting oil, solids, and treated water were analyzed to determine the ultimate distribution of contaminants and the basis for disposition of the materials generated from the processing. The water treatment applied to the process effluent consisted of a two-stage clarification system. The first stage reduced oil and grease by addition of sulfuric acid and an emulsion breaker. The second stage reduced heavy metals using lime, a coagulant and a coagulant aid.

Table 8 identifies the types of analyses applied to the samples as received and the products of simulated treatment. All analyses were conducted using EPA methods. Water quality analyses included halogens, sulfate, total dissolved solids, total organic carbon, pH, turbidity (NTU), and conductivity. Oil quality analyses included sulfur, sediment and water, pour point, flash point, specific gravity, and heat value. All analyses have been reported by RCC in their Phase 1 test report. The PCB results were reported as combined Araclor 1242 and Araclor 1260, and are shown here.

3.3.4.2 Phase 2, Testing--

RCC conducted further testing of the process in their Components Testing unit to establish operating conditions for the treatment and to determine the quality of the products, namely, recovered oil, water, and solids. Two different types of feed stocks were prepared for processing, each using different proportions of the total contaminated material present at the site. The B.E.S.T. water effluent was treated by a two stage, coagulation process to reduce the amount of oil, metals, and other contaminants.

Feed Composition--Calculations were made to estimate the blend of site materials to achieve a representative feed stock which would allow the processing of all site materials at a constant feed composition. Two feed stocks were established as blends of the materials, as shown in Table 9.

TABLE 8. (Continued)

Sample	Total metals	Water quality	PCBs µg/L	Composition	EP Tox. leachate	Oil quality	Total organics
Ponds 2-4 surface plus 3 parts free water							
Solids product			insufficient solids for analysis				
Treated water	X	X	<5				
Oil product	X					X	
Ponds 1-4 sediment							
Oil product	X		46			X	
Solids product							
Backfilled lagoon				X			
Storage tank oil			<10				

[a]From RCC Phase 1 test report.
[b]X indicates that analyses were conducted.

TABLE 10. BASIC EXTRACTION SLUDGE TREATMENT (B.E.S.T.) PROCESS COMPONENTS TESTING, ANALYSIS OF SOLIDS PRODUCTS

Item	Method	Feed 1	Feed 2
As	EP Tox (mg/kg)	<0.2	<0.2
Ba	EP Tox (mg/kg)	0.1	0.1
Cd	EP Tox (mg/kg)	<0.01	<0.01
Cr	EP Tox (mg/kg)	0.02	<0.02
Cu	EP Tox (mg/kg)	<0.01	<0.01
Fe	EP Tox (mg/kg)	0.48	7.1
Pb	EP Tox (mg/kg)	1.7	4.8
Mn	EP Tox (mg/kg)	0.13	0.11
Hg	EP Tox (mg/kg)	<0.05	<0.05
Ni	EP Tox (mg/kg)	<0.02	<0.02
Se	EP Tox (mg/kg)	<0.3	<0.3
Ag	EP Tox (mg/kg)	<0.01	<0.01
Zn	EP Tox (mg/kg)	0.66	2.5
TEA	G.C. (mg/kg)	<100	<100
PCBs	G.C. (mg/kg)	0.14	0.02
As	Total Digest (mg/kg)	7	<5
Ba	Total Digest (mg/kg)	300	90
Cd	Total Digest (mg/kg)	0.6	0.3
Cr	Total Digest (mg/kg)	12	5.3
Cu	Total Digest (mg/kg)	14	7.7
Fe	Total Digest (mg/kg)	3,000	1,700
Pb	Total Digest (mg/kg)	3,000	1.200
Mn	Total Digest (mg/kg)	13	7
Hg	Total Digest (mg/kg)	<1.0	<1.0
Ni	Total Digest (mg/kg)	2.0	1.0
Se	Total Digest (mg/kg)	7	<6
Ag	Total Digest (mg/kg)	<0.2	<0.2
Zn	Total Digest (mg/kg)	58	50
O&G	Total Digest (mg/kg)	0.4%	0.5%

Resources Conservation Company

accomplished by providing a recycle of the oil-rich stripper bottoms with the incoming feed to the stripper.

3.3.4.4 Field Test Results--

The cleanup was completed March 6, 1987 using a full-scale system designed based on the data given in Section 3.3.4.3. Analytical data are not yet available for the sampling program carried out during the cleanup. When available, these data can be analyzed to provide a basis for confirmation of the performance of this process in removing PCBs from sediments.

3.3.5 Additional Data Needs

For application to PCB sediment, the following data needs have been identified. Laboratory testing of the sediments is necessary to determine:

1. The number of extraction stages required to achieve <2 ppm PCBs in the treated sediments;

2. The amount and type of alkali to add;

3. The suitability of the process for the range of particle size (up to 0.64 cm dia particles are readily accommodated);

4. The settling characteristics of the sediments in the single liquid phase;

5. The best ratios of TEA/water to employ;

6. The need to add a suitable oil to the feed to enhance the extraction of PCBs from the sediments; and

7. The need for post-treatment of process water effluent.

Based on the data of Section 3.3.3, RTI concludes that the extraction of PCBs may be more efficient for sediments containing some oil than for those containing little or no oil.[1] If laboratory tests confirm this, oil could be

---

[1] The Resources Conservation Company disagrees somewhat with this conclusion (Tose, M. K. 1987): "This may be true in the comparison of the data presented, but I do not believe that there is enough data to say with confidence that this is so." RTI believes that, should the extraction without oil reach a limit, as shown in Table 20, then the process should not be rejected without trying oil addition. The low PCBs in the solids from treatment of sludges containing oil (Table 23) are the basis for RTI's proposal that oil addition be tried if needed.

- Water
  - Steam strip for solvent recovery
  - Test for PCBs, TOC, oil and grease, total solids, total dissolved solids, and residual solvent
  - Nitric acid digest for metals
  - Remaining water sample available for client analysis

- Oil
  - Steam strip for solvent recover
  - Test for PCBs, residual solvent and water
  - Oil tests; API gravity, BS&W
  - Metals analysis following xylene dilution
  - Remaining sample available for client analysis

3. Conclusions of Glassware Evaluations:

   - Final report prepared containing all analyses and relevant observations.

   - RCC engineering and laboratory personnel available for discussions.

   - Upon successful results, proceed to pilot testing.

Basic Extraction Sludge Treatment process pilot testing would include the following elements.

1. Component Tests, Pilot Units:

   The sediment sample will be treated as follows:

   - PCB extraction of the sediment with solvent will be accomplished by mixing and centrifuging the solvent/sediment mixture. The centrate and centrifuge solids from the extraction will be collected for further processing and analysis.

   - The centrate will be heated and decanted and the two recovered fractions segregated. The upper soil/solvent layer will be stripped of solvent in a column. The lower water layer will also be stripped of residual solvent in a separate column. If necessary, the recovered water will be post treated to achieve the desired level of purity.

2. Analytical Tests:

   Basic Extraction Sludge Treatment process separated components will be analyzed as follows:

   - Recovered oil will be analyzed for:
     - PCBs
     - Water content
     - Residual solvent
     - Sediment.

TABLE 13. SAMPLES/ANALYSES FOR BASIC EXTRACTION SLUDGE TREATMENT (B.E.S.T) PROCESS, PRELIMINARY TESTS

Sample	Number	Analyses	Method	Estimated cost of analyses[a]
Feed	1 composite	1	Volatiles[b] (T04)	$ 125
		2	Pesticides/PCBs (w/cog. scan)	500
		2	Metals (24 by ICP, AA)	370
Successive washings	4 solids	4	Pesticides/PCBs (608/8080 w/ cog. scan)	1000
		4	Metals (24 by ICP, AA)	740
	4 water	4	Pesticides/PCBs (608/8080)	550
		4	Metals (24 by ICP, AA)	740
	4 oil	4	Pesticides/PCBs (608/8080)	550
		4	Metals (24 by ICP, AA)	740
Total				$5,315

[a]Costs based on standard costs by California Analytical Labs.
[b]EPA 600/4-84-04

amount to 26.2 kg (≈62.4 L or 16.5 gallons). Although the cost estimate includes the cost of utilities, it is assumed that installation of electrical service to the site(s) is provided by others. Also, cooling water is assumed to be readily and freely obtainable from the Hudson River. All permits, licenses, a level site, concrete foundations and containment for the B.E.S.T. unit will be provided by others.

The estimated cost is $133.30, using a standard 50 percent profit (RCC used 49.9 percent). This estimate is detailed in Table 15. Note that the capital costs are amortized over the first 380,000 m^3 of sediment treated. Thereafter, the treatment cost would reduce to $73.31 m^3 of treated sediment.

3.3.7 Environmental Characteristics

Process wastewaters may contain undesirably high TEA concentrations and be toxic to fish. Overdesign of the water stripper is necessary to remove any excess TEA. In addition, wastewater treatment may be required, and has been included in the cost estimates. Emissions of TEA from vents, etc., require control by condensation and/or scrubbing with cold TEA. The decanters require a nitrogen blanket to insure against unsafe vapor concentrations.

3.3.8 Health and Safety Characteristics

The sediments feed and the concentrated PCB-containing oil are hazardous and require special handling, with provision for personnel protection. The solvent, TEA, is handled safely in many commercial operations.

Secondary containment under the full-scale unit is planned, with any spills conveyed to storage.

3.3.9 When Process Can Be Made Available

Full-scale processing of Hudson River sediments could begin in 14 to 19 months per the following schedule submitted by RCC.

• Test and Evaluation	1 month
• Report	2 months
• Approval by EPA	3 months
• Design, Procure, fabricate and ship	10 months[a]
• Installation	1 month
• Checkout/startup	2 months
• Total	14 to 19 months

[a]Up to 5 months of this effort could be carried out in parallel (e.g., design and procurement). This would reduce the total time to 14 months

3.4 UV/OZONE/ULTRASONICS AND UV/HYDROGEN/ULTRASONICS TREATMENT. OZONIC TECHNOLOGY, INC.

3.4.1 Availability of System for Test

The LARC process employing ultraviolet (UV) energy and hydrogen was studied under Phase 1. It is not now under further consideration by the developers (Atlantic Research Corporation). Another firm, Ozonic Technology, Inc., 90 Herbert Avenue, P.O. Box 320, Closter, N.J., has capabilities and interest in conducting tests of PCB-contaminated sediments. Ozonics utilizes ultrasonics together with UV/ozone treatments in several commercial applications and has applied for a patent on their process. The use of ultrasonics to increase the rate and extent of extraction of PCBs from sediments and to increase the rate of destruction of PCBs in subsequent UV/ozone or UV/hydrogen treatment offers the potential for substantial savings in the cost of treatment.

The technology to be demonstrated consists of three steps: extraction, solids separation, and UV/ozone treatment of the extracted PCBs. The sediments would be treated in a water slurry.

Ozonics has a bench-system suitable to demonstrate performance and determine parameters for a commercial size treatment system.

3.4.2 Process Description

The process is described based on parameters chosen from the technical literature. As shown in Figure 5, the sediments are mixed with sufficient water to dissolve the contained PCBs. For the flow diagram, sediments are assumed to contain 300 ppm PCBs, equivalent to 0.504 kg per m^3. In an ultrasonic-assisted extraction of PCBs with an aqueous surfactant, Smith and Sitabkhan (1986) obtained a solution concentration of 44 mg/L (0.044 kg/m^3). This concentration was used to estimate the ratio of water to sediment for the process:

$$\frac{0.504 \text{ kg PCB/m}^3 \text{ of sediment}}{0.044 \text{ kg/m}^3 \text{ of water}} = 11.45 \text{ m}^3 \text{ water/m}^3 \text{ of sediment}$$

The required treatment rate set to define the process for use on Hudson river sediments was 21.7 m^3 of contaminated sediments per hour (520 m^3 per day). Figure 5 shows one of five required stirred tank ultrasonic extractors.

each holding 10 m^3 of slurry feed. The extractor volume was set to provide an average residence time of nine minutes with stirrings at 200 rpm (Levenspiel, 1962).

The reactors were sized conservatively, using 44 mg/L as the limit of solubility. PCBs have been extracted from soils using a 1 percent Tween 80 surfactant (Scholz and Milanowski, 1984). The tests were conducted with soils dosed up to 26,000 ppm PCBs. Ultrasonic power was not used. While extraction was incomplete relative to the $\leq$ 2 ppm residuals standard, the supernatant liquid had a PCB concentration of 366 mg/L.

Ultrasonic energy input was set at 13.2 watts/L. This energy level would be achieved using suitable transducers to convert 60 Hz power to 23 - 43 kHz acoustic power at 80 percent efficiency. The treatment time required to achieve the desired PCBs removal cannot be specified with precision until suitable data are obtained in preliminary tests. A range of 9 - 18 minutes has been estimated to be necessary, based on information from studies of ultrasonic-assisted extraction reported in the literature (Fogler, 1971, Schunn and Sole, 1967). Fogler summarizes four such studies each assessing the results of the use of ultrasonics on different, but relevant criterion:

Extraction	Comparison	Results
1. Alkaloids from jaborandi leaf	Ultrasound vs Soxhlet extraction	15 sec w/ultrasound = 5 hours w/Soxhlet extraction
2. Oil from cotton-seed	Ultrasound vs no ultrasound	830 percent increase in amount extracted
3. Bitters from beer hops	Hops consumption with ultrasonics vs without ultrasonics	40 percent reduction with ultrasound
4. Perfume extraction	Payout time for use of ultrasound	Less than 1 year

The data from extraction of oil from cottonseed (Schurig and Sole, 1967) provide guidance in regard to the impact of ultrasonics power on the overall rate of extraction and on the rate of diffusion of the oils through the porous membranes in which they are held. The authors used a small plug flow reactor with a fixed bed of solids, and developed a correlation between extraction rate and ultrasonic power per cm^2 of extraction base area:

The very fine suspended solids are expected to have adsorbed PCBs on their surfaces, and are allowed to remain in the water while the UV/ozone treatment is applied. PCB degradation using UV/hydrogen has been demonstrated in the presence of particulates (Kitchens et al., 1984).

The UV/ozone treatment unit has been projected from a detailed design and cost study (Hackman, 1978). Their recommendations were followed for residence time, required O_3, and required UV lamps. The residence time was set at 265 minutes, based on data from batch studies conducted by the Houston Research Corporation. Ozone requirements were set at 1127 kg/day. This provides an estimated 4 mg/L O_3 in the effluent from the reactor plus 0.1 mg/L O_3 per minute of residence time to account for auto decomposition of O_3, and 3 kg O_3/kg of COD. The sediments are expected to contain non-PCBs COD at an estimated 30 mg/L. For the sake of conservatism, non-PCBs COD was assumed to be completely oxidized before PCBs could be oxidized. It was also assumed that this can be done within the residence time projected for PCBs removal. The number of lamps (43-watt) was set at 7800 (one lamp per 0.14 m^3 of reactor volume).[1] As shown in Figure 5, the lamps are stacked vertically throughout the reactor to provide continuous irradiation of the water throughout the path of flow.

This projection of UV/ozone treatment is based on demonstrated technology, and a conservative ozone dissolution efficiency of 0.7 as recommended by Evans (1972). This efficiency could be increased by using ultrasound in this reactor. Ultrasound would also be expected to help keep the UV lamps clean, and thus maintain their performance. Ultrasonic energy was not applied in the projection for this stage of treatment because no suitable data were found on which to base the projection. The estimated cost of treatment may be correspondingly high.

The treated water would be recycled, or discharged after conditioning to remove any residual suspended particles.

3.4.3 Information from Prior Studies

PCBs have been removed from high-energy metallic surfaces by ultrasonic-assisted extraction with aqueous surfactant solutions (Smith and Sitabkhan, 1986). Using Nu-Clear at 10 percent, metal coupons coated with PCBs (Aroclor

---

[1]This number of lamps provides 0.30 watts of UV per liter of reactor, which slightly exceeds the 0.27 watts/L recommended by Glaze et al. (1984) for UV/ozone removal of trihalomethane precursors.

- To compare the performance of UV/ozone/ultrasonics with UV/hydrogen/ultrasonics; and

- To set parameters and performance standards for a full-scale process.

A series of 25 extraction tests and 21 UV/ozone (or UV/hydrogen) test are expected to be required to meet these purposes. The extraction tests would be designed to compare the residence time requirements for adequate removal of PCBs both with and without ultrasound. At least two different ultrasound power levels would be tested. The maximum sediment concentration in the slurry that can be adequately extracted, and the effects of various ultrasound frequencies, power, and ozone treatment on this concentration would be identified using small sets of experiments sequentially designed.

The UV tests would determine whether ozone or hydrogen were required to effect the necessary destruction of solubilized PCBs, and the impact of ultrasonic and UV power on the treatment time requirement. The resulting data would determine the performance and operating requirements for the sequenced treatment. Factors to be observed would include:

- The extent of extraction vs treatment time, the residual PCB in the sediments, and the concentration of the liquid after extraction at varying ultrasonic power loadings (including none);

- The relative merits of UV/ozone/ultrasonics versus UV/hydrogen/ultrasonics;

- The extent of PCB destruction in the separated liquid extract as a function of ozone level, UV power level, ultrasound power level, and time;

- The effectiveness of the ultrasound in reducing or preventing fouling of the UV lamp surfaces; and

- The required reagent usage rates per m^3 of treated sediment.

The sampling requirement for these tests are shown in Table 16. The additional data would be obtained utilizing the bench-scale capabilities and equipment of Ozonics Technology, Inc. A permit would be required. The cost of conducting the tests is estimated at $55,000 not counting support services provided by EPA.

The total estimated T and E cost is $151,000 (analyses - $21,000; T and E support, permits, and report - $75,000; system operation - $55,000).

3.4.5 Probable Cost of Treatment

The probable cost of treatment, estimated from the process as projected in Section 3.4.2, is $90 to $120 per m^3 of containated sediment treated. The capital cost for ultrasonic extraction was estimated based upon the cost of ultrasonic transducers at $2,900 per kW of power input, and the cost of stirred tank extractors. These main equipment items were allotted 40 percent of the total required investment. Additional capital costs were included at the following proportions: installation 6 percent, piping 5 percent, electrical 5 percent, building and services 5 percent, engineering 10 percent, construction expenses 12 percent, contractor fee 2 percent, and contingency 15 percent.

The capital cost for solids separation was estimated based on the cost of six hydroclones and a manifold (Dorr-Oliver). Additional elements of capital cost were allocated as for the extraction system.

The UV/ozone treatment cost was estimated based on the reactor flow rate of water separated from the sediments, 4.17 m^3/minute. Capital costs detailed by Hackman (1971) were equated to this flow rate and updated to 1986. For this system, electrical costs were allotted 15 percent of the cost of the ozone production unit. The number of ultraviolet lamps was estimated one per 0.14 m^3 of reactor volume.

The details of the capital cost estimated are given in Table 17. The total estimated treatment cost is shown in Table 18. Electric power for ultrasound generation, ozone generation, ultraviolet generation, and materials handling is $20.59/$m^3$ for 9-minutes extraction time, and $22.63/$m^3$ for 18 minutes. Labor costs are based on 7 operators per shift, plus 1 foreman and one chemist, with 1 general manager for the project.

3.4.6 Environmental Characteristics

The process would have vents for exit gases which would require monitoring and control of PCBs or other volatiles. Unused hydrogen would be recycled. Unused ozone would be decomposed by treatment with a suitable reducing agent. Feed sediments are hazardous and require special handling. The treated sediments, if cleaned to <2 ppm PCBs, would not be considered hazardous with respect to PCB-content.

The effluent waters would have been treated for PCBs, a factor inherent in the process. Further treatment for residual surfactants might be required

3.4.7 Health Characteristics

Hydrogen, if used, is flammable and would require special handling. Special clothing would be required for sediment handling, as is the case with all processes assessed.

3.4.8 When Process Can Be Made Available

The firm involved, Ozonics Technology, Inc., based on experience gained over several years in designing ultrasonic systems handling ozone, believes the process could be scaled-up based on the bench-scale tests. If ozone is used, suitable generators are commercially available. If hydrogen is used, some provision for its recycle would permit the use of purchased liquid hydrogen, avoiding the cost of a hydrogen plant. Without recycle, an onsite hydrogen plant using steam/ methane reforming or methanol cracking would be required. The following schedule shows the estimated time to full-scale operation:

Test and Evaluation	3 months
Report	2 months
Approval by EPA	3 months
Process, design, fabrication and shipment	13 months (10 months if ozone is used)
Installation	2 months
Checkout/Startup	1 month
Total	21 - 24 months

Ozonics has indicated that all technical work involving their systems can be carried out without delay, and that therefore, this schedule could be shortened significantly (Pedzy, 1987)

3.5 NATURALLY-ADAPTED MICROBES PROCESS, BIO-CLEAN, INC.

3.5.1 Availability of a System to Test

The Bio-Clean Naturally-Adapted Microbe process has been developed by Bio-Clean, Inc., Suite 130G, Burnsville, Minnesota 55337. A patent is pending on the process. Bio-Clean is a company engaged in developing process systems to

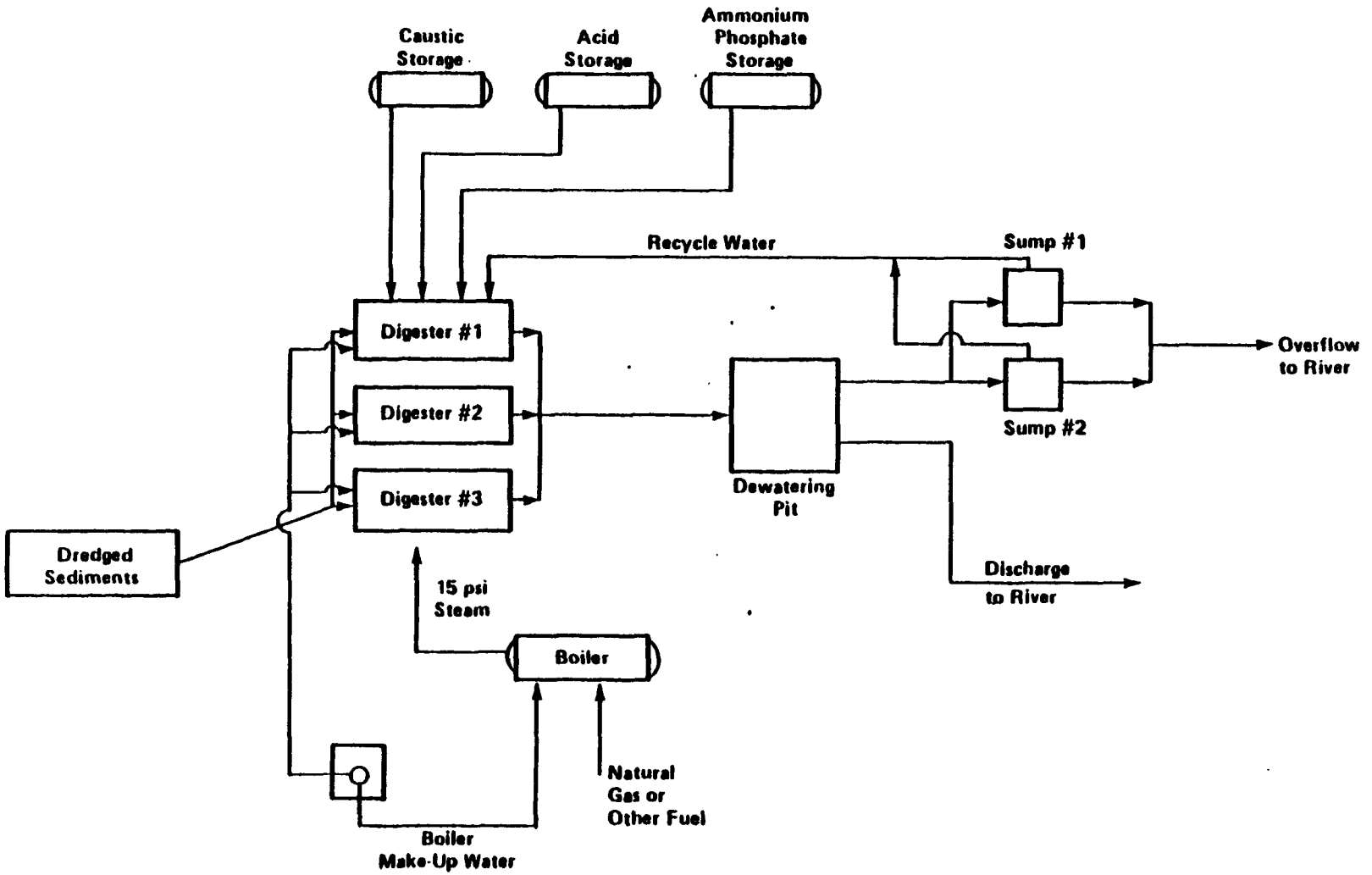

Figure 6. Schematic of Bio-Clean Naturally-Adapted Microbe process as applied to sediments.

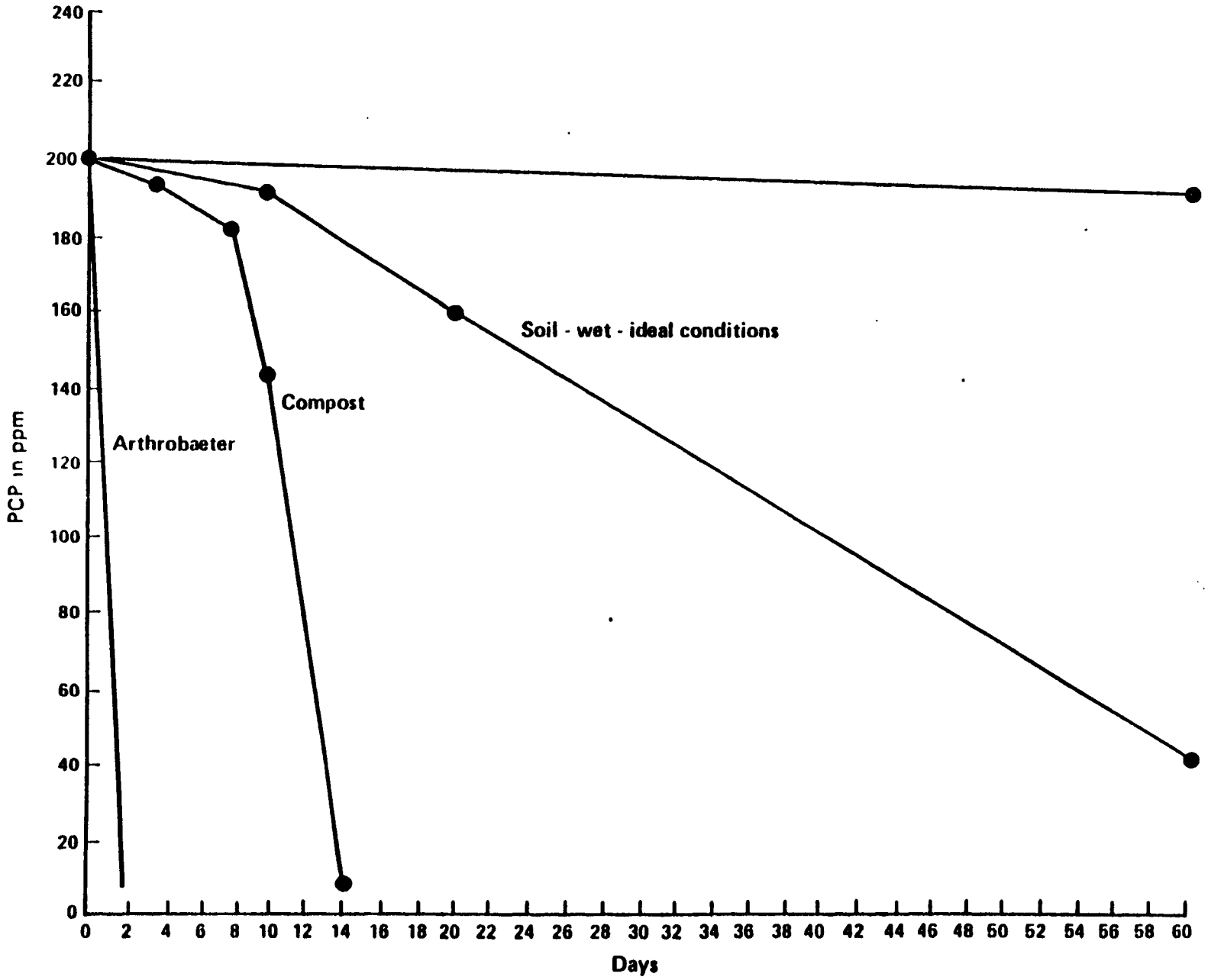

Figure 7. Typical pentachlorophenol decay rates vs. time (Bio-Clean, Inc.).

ppm to 7.5 ppm on the soil after three days. A repeated test using culture from the first test reduced the soil PCP level from 200 ppm to 18 ppm in less than 2 days (46 hours). Subsequent tests showed reduction to below 5 ppm in 48 hours.

The process was tested further in larger equipment:

- A 0.95 m^3 rotating drum system;
- A 16.7 m^3 horizontal tank with a top-mounted stir agitator; and
- A pilot-scale Bepex ribbon blender (Bepex Corporation, Minneapolis, Minnesota).

All three systems gave PCP destruction to less than 5 ppm. The rotating drum system would require special seals to prevent leaks. The horizontal tank system provided incomplete mixing, and unloading of the treated soils was a problem. The Bepex blender performed satisfactorily, but needed design modifications to provide better temperature control.

These tests provided the process parameters needed for purchase of commercial-scale equipment, as follows:

Parameter	Specifications and Ranges of Operation
Soil	Screened to 1/2" or less
Water	Recycle to produce slurry
Caustic	To produce pH 11.0 ± 1.0 (0.001 N to 0.01 N NaOH)
Heat	80 °C (176 °F) or more for 1 hour
Nitrogen	To produce 0.6% by wt.
Acid	To pH 7.2 ± 0.4
Water	To cool and dilute to 200 ppm of PCP
Bacteria	To produce 2 million cells/ml
Ferment	With air, at 30 °C (86 °F) for 48 hours
Discharge	Empty and repeat cycle

3.5.5 Process Design Basis for PCP Cleanup

Bio-Clean developed a design basis for a system to clean up a site containing 7646 m^3 (10,000 cubic yards) of PCP-contaminated soil in nine months. A system with three 91 m^3 (20,500 gal) digesters operating at 90 percent utilization would be required. This would permit the cleanup of 30.6 m^3 of soil per day, using the following batch formula.

to dissolve 270 mg/L of the contaminant. Data for water solutions show a range of 72-412 mg/L, depending on whether inorganic or organic soil was extracted (Scholz and Milanowski, 1984).

The best microorganism for the digestion of PCBs in this process needs to be determined. Suggested candidate microorganisms for testing include the Alcaligenes eutrophus H850 and the Pseudomonas Putida LB-400 shown by Bedard to be very effective (Bedard et al., 1985). Samples of these strains can be obtained from General Electric Research, Schenectady, New York (Finkbeiner, 1987). All organisms tested could, if required, be selected from those approved by the U.S.D.A. Fish and Wildlife-approved list. Bio-Clean suggests that one of the selected microbe cultures be taken from Hudson River Isolates themselves. It is estimated that one to two weeks will be required, initially, to condition the microbes for these sediments.

Initial process tests would use the conditioned cultures. Thereafter, in subsequent tests, batches will be inoculated with 3-5 percent of the liquor from the previous batch. New culture would be expected to be supplied once per month, from a full-scale fermenter dedicated to this service. Digestion time, temperature, and nutrient needs will be determined using the New Brunswick fermenter. Periodic sampling of the well mixed slurry, followed by phase-separation and analysis of both phases for PCBs will provide data to time the digestion phase of the treatment cycle.

During the heating cycle, vapors are condensed. Exit gases will be sampled and analyzed for PCBs and other toxic-emissions. After seeding, there is no recycle of exit gases. Only sterilized air is fed in order to prevent the entry of unwanted microorganisms while providing needed oxygen for microbe growth. Based on oxygen rates used in the field tests, the needed air rate could be up to 0.5 kg mol of air per minute per cubic meter of digester charge (3.4 kg O_2/min x m^3 of charge). The initial tests will determine the required aeration rates.

Ammonium phosphate is added as needed as a nutrient and buffer at a rate of 0.1-1 percent by weight. It is added to the batch after the high-temperature period, while the batch is still hot and before adjusting the pH downward from ≈11 to 7.2 with sulfuric acid. The digester charge should be sampled after these additions, and cooling of the charge.

For the PCP field test, the hot mixture was cooled by dilution with sterilized water and the final solids volume fraction was 0.36. For Hudson

TABLE 19. SAMPLES/ANALYSES FOR BIO-CLEAN NATURALLY ADAPTED MICROBE PROCESS, PRELIMINARY TESTS

Sample	Number	Analyses	Method	Estimated cost of analyses[a]
Solubility/ Extraction	4 sediments x 2 each = 8	8 s. x 2 (1 sediment, 1 liquor) = 16	Pesticides/PCBs 608/8080	$ 2,200
Sediment grinding[b]	2 sediments x 2 each = 4	4 s. x 2 = 8	Pesticides/PCBs 608/8080	1,100
Microbe Selection	4 cultures x 1 Bedard standard test each = 4	4 s. x 2 (1 sediment, 1 liquor) = 8	Pesticides/PCBs 608/8080	1,100
Process Parameters	2 temp. x 9 tests = 18 (solids and liquid)	36	Pesticides/PCB 608/8080	4,950
		2	Metals (ICP, AA)	370
		2	PCB 608/8080 w/cogener scan	500
Exit Gas Samples	18 tests x 2 each = 36 (1 during extraction; 1 during digestion)	36	Volatiles[b] (T04)	4,500
		36	Pesticides/PCB 608/8080	4,950
Feed	1 composite	1	Volatiles[c] (T04)	125
		2	Pesticides/PCBs (w/cog. scan)	500
		2	Metals (24 by ICP, AA)	370
Total				$20,665

[a]Costs based on standard costs by California Analytical Labs.
[b]Collected emissions from the grinding operation.
[c]EPA 600/4 84 04

The preliminary testing is estimated by the developer to cost $15,000; the pilot demonstration, $40,000. This does not include the sampling and analyses given in Tables 19 and 20.

The total estimated T and E cost is $165,800 (analyses - $35,800; T and E support, permits, and report - $75,000; system operation - $55,000).

3.5.7 Probable Cost of Treatment After Demonstration

The probable cost of treatment of Hudson River Sediments using the Bio-Clean Naturally-Adapted Microbe process has been estimated by the developer for a commercial-sized system designed to treat 650 m^3 per day of sediment. This capacity will, at 65 percent utilization, treat 380,000 m^3 of contaminated sediment in 2.5 years or less. A low utilization allows for process shutdown during freezing weather. The treatment system would consist of sets of three digesters, as shown in Figure 6. The floating process would use river water for non-contact cooling, and could be used at other locations. The estimate assumes a laboratory onsite, as part of the system, so that treated sediments could be tested, certified, then discharged back to the river. A post-treatment of wastewater at $2.20 per m^3 of sediment treated has been added to Bio-Clean's estimate as a contingency. The percent profit, cited by Bio-Clean at 40, has been increased to 50 for uniformity.

The estimated cost is $156/$m^3$. The estimate is detailed in Table 21. The labor cost includes operating and maintenance labor, and laboratory testing costs for operational control.

3.5.8 Environmental Characteristics

The treatment process utilizes naturally occurring microorganisms. The organisms are adapted to PCBs by their exposure to these chemicals as food. Their action is expected to result in complete mineralization of the PCBs, with the final products of the process being carbon dioxide, water, and sodium chloride. This requires confirmation since the degree of competence in degrading PCBs varies with the strain (Unterman, 1985). The organisms can be selected from these approved by the U.S. Department of Agriculture Fish and Wildlife Division.

During operation of the process, air feed as a source of oxygen is exhausted to the atmosphere. This stream is passed through a condenser to remove all condensible components. Vent gases from the condenser will be

tested for any hazardous contaminants. The stream is continuously monitored for CO_2 as a part of process control.

The treated slurry would contain acceptably low levels of PCBs (or none) in both the water and sediment phases together with spent microorganisms and should on this basis be dischargeable back into the river.

3.5.9 Health and Safety Characteristics

The sediment feed is hazardous and requires special handling, with provision for personnel protection. The only reagents used are sulfuric acid and sodium hydroxide. These would be stored in tanks with containment beneath, and provision to pump any spills to a holding basin for neutralization. The microorganisms are natural to the environment, but may be a health risk to workers using the process.

3.5.10 When Process Can Be Made Available

Upon successful demonstration, the process could be made available, given sufficient funding, in 19 months from the start of preliminary testing, according to Bio-Clean. The preliminary testing and pilot tests would require an estimated nine months. Construction of the plant would require approximately 10 months. The following schedule shows the estimated time to full-scale operation.

Preliminary tests	1.5 months
Test and evaluation	2.5 months
Report	2 months
Approval by EPA	3 months
Process design, fabrication, and shipment	10 months
TOTAL	19 months

3.6 POTASSIUM POLYETHYLENE GLYCOLATE (KPEG) WITH DMSO PROCESS BY GALSON RESEARCH CORPORATION

3.6.1 Availability of System for Test

The Potassium Polyethylene Glycolate (KPEG) with Dimethyl Sulfoxide process has two potential applications in the treatment of PCB-contaminated sediments: the treatment of the sediments themselves and the treatment of concentrated PCBs from extraction processes. The former is assessed herein in

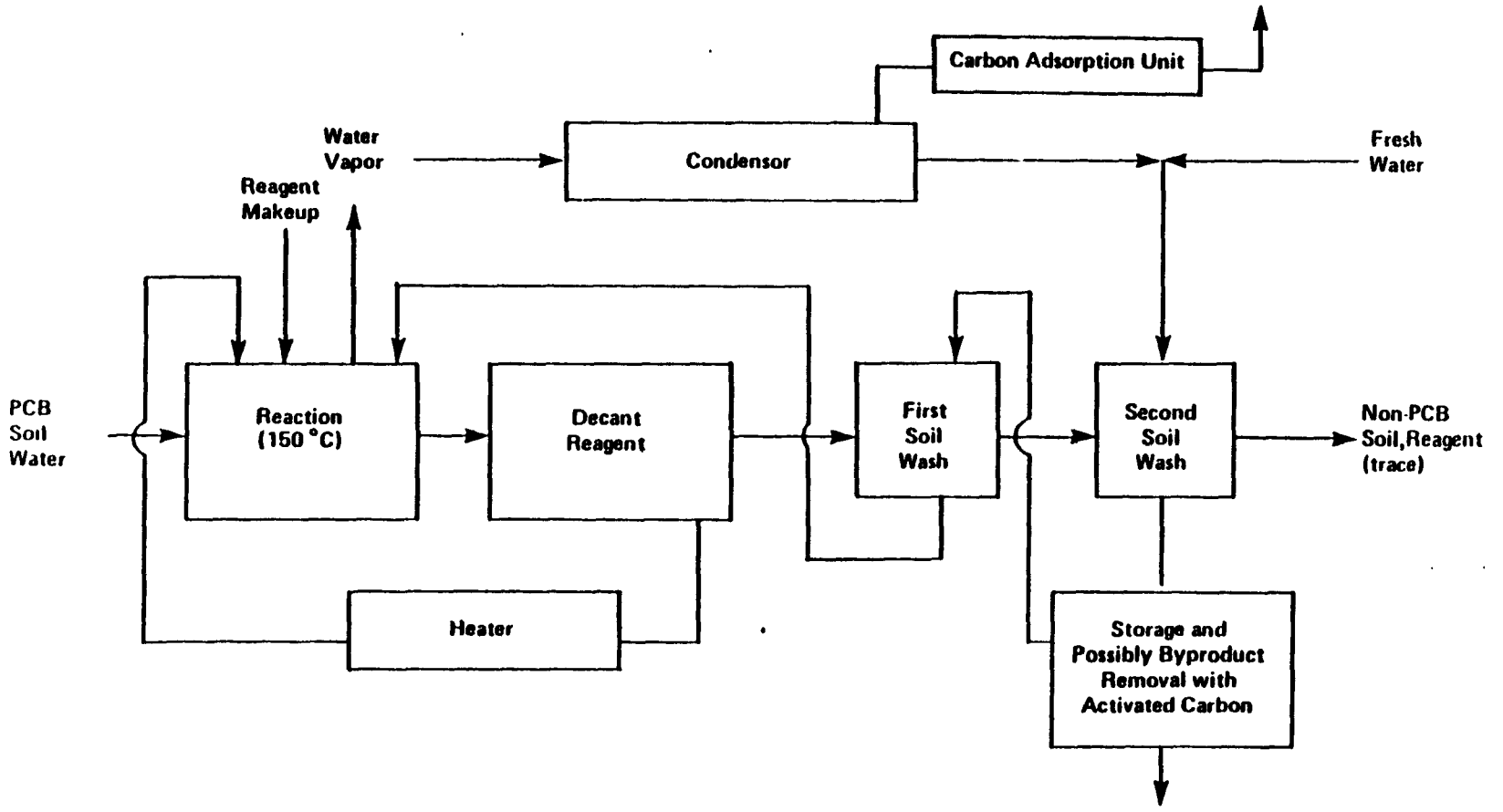

Figure 9. Schematic of KPEG with DMSO process.

3.6.4 More Recent Data

3.6.4.1 Preliminary Tests--

The KPEG with DMSO process is to be demonstrated for treatment of PCB-contaminated soil on Guam. Preliminary work on process operating conditions has been completed, and EPA is acquiring a 1.5 m^3 treatment system for this evaluation. Data acquired for an operating permit application are summarized here (Research Demonstration Permit Application, 1987).

Replicate samples of soil to be treated showed the following analyses:

PCB Type	Site No. 19	Site No. 22
1. Aroclor 1260, ppm	2950	300
2. Aroclor 1260, ppm	4450	2000

The soil is sandy in texture, and contains about 17 wt. percent moisture. Laboratory-scale KPEG treatments were applied by Kornel and Galson (Kornel, 1986). Kornel reduced the PCB levels to 17.5 ppm by GC quantification (28.3 ppm by MS quantification) by treating the soil 5 hours at 115 to 120 °C. Residual PCBs were qualitatively identified as penta- and hexa-chloro biphenyl. These congeners had been reduced 75 percent and 60 percent, respectively by the treatment. Galson reported reduction from 1800 to 2.3 ppm by treatment at 150 °C for 2 hours (Peterson, 1986).

The reagent medium selected on the basis of these tests consists of:

2 parts by wt.:	Polyethylene glycol 400 (MW 400)
2 parts by wt.:	Dimethyl sulfoxide
1 part:	50 percent aqueous potassium hydroxide

The reagent is applied to an equal volume of sediment.

3.6.4.2 Toxicity of KPEG Reaction Products--

The basic nucleophilic substitution chemistry of the KPEG process yields substituted biphenyls rather than ultimate products of decomposition, CO_2, H_2O, and KCl. A large number of byproducts may be formed in processing the PCB contaminants. Thus, a great deal of painstaking analytical chemistry may

TABLE 22. TOXICITY TESTS OF REACTION PRODUCTS OF KPEG WITH DMSO[a]

Contaminant Treated	Test	Species Treated	Results				
Tetrachlorobenzene	Bioaccumulation	Pathead Minnow	Sample	TCB in Tissues, mg/g	Bioaccumulation Factor		
			control	<0.1	0		
			0.5 ppm TCB	1735	6195		
			0.5 ppm TCB/KPEG	<0.1 to 0.3	0		
2,3,7,8-Tetrachloro-dibenzo p-dioxin) (TCDD)	Mutagencity (Kado Test)	Salmonella typhimurium, Strain TA98 with S9 rat-liver extract	Ratio Colony Counts: Test Material/Controls				
				Strain TA98		Strain TA98	
			Material	S9	No S9	S9	No S9
			TCDD/KPEG	1.3	1.2	1.0	1.1
			KPEG	1.1	0.7	1.1	1.0
			DSMO	1.2	0.7	1.0	1.0
			Anthracine	41.6	---	6.1	---
			2-Nitrofluorene	---	14.9	---	---
TCDD	Aquatic Toxicity 30-days	Carp	Material			Number Died	
			KPEG/TCDD byproducts, 250 ppm			0.0	
			KPEG, 250 ppm			0.0	
TCDD	Mammalian Toxicity, oral administration 50-days	Guinea pig	Material	Dose Multiples of LD50		Deaths	
			KPEG/TCDD byproduct	0.5		0	
				1		0	
				2		0	
				100		0	
			KPEG reagent	0.5		0	
				1		0	
				2		0	
				100		0	

[a]Research Demonstration Permit Application, 1987

products of PCB reaction, substituted biphenyls, were not necessarily present since previous tests involved products of reaction with other chemicals.

A demonstration test is needed. The Galson pilot system would meet requirements for a test system. Operating parameters and reagent composition would be defined by the data from the preliminary tests. This system is designed to treat 45.4 kg (100 lbs) of solid particulate per batch. To acquire scaleup data, five to ten complete batch treatments would be made. Each treatment would take an estimated four to six hours of which the sediments would be reacted at prescribed temperatures from one to three hours. The remainder of the runs would be devoted to startup, stabilization of the system, and shutdown. Allowing time for cleanup, preparation for the next run, any repairs or modifications, and process data compilation, the total test program would require three to four weeks.

While fewer runs might suffice to demonstrate the performance of the treatment, addition of selected tests to determine scaleup needs will help ensure a better full-scale system.

Scaleup to a commercial size system consisting of multiple reactors for treatment of at least 14 m^3 sediment per batch will require:

1. Sizing of carbon filters for vent gases;
2. Selection of reactor mixer;
3. Choice of heating plant: steam or hot oil; and
4. Selection of controls.

Estimated sampling and analysis requirements for the demonstration tests are presented in Table 24.

The preliminary tests and system operation for T and E are estimated by the developer to cost $100,000. Adding analyses at $21,000, and support at $75,000 gives a total estimated cost of $196,000.

3.6.6 Probable Cost of Treatment After Demonstration

The cost of KPEG with DMSO process treatment depends upon the size of commercial units used and the water content of the sediments to be treated. To clean up the Hudson River sediments in 2.5 years, a system consisting of 5 sets of 3 reactors (14 m^3 capacity each) are estimated to be required. These reactors would be mounted in five modules, served by a single utility module

TABLE 24. SAMPLES/ANALYSES FOR KPEG WITH DMSO PROCESS DEMONSTRATION TESTS
(Basis 8 Runs)

Sample	Number	Analyses	Method	Estimated Cost of Analyses[a]
Feed (raw sediments)	8 composite	8	Pesticides/PCBs (608/8080)	$ 1,100
		8	Volatiles (T04)[b]	1,000
		8	Metals (34, ICP, AA)	1,480
Treated sediments	3 (hourly intervals) x 8 = 24	24	Pesticides/PCBs (608/8080)	3,300
		8 (final each test)	Metals (24, ICP, AA)	1,480
Condenser vent	8 composite	8	Volatiles (T04)[b]	1,000
Wash water, 2nd wash	8 composite	8	Volatiles (601, 602)	1,000
			Pesticides/PCBs (608/8080)	1,100
Total				$11,460

[a]Costs for non bio tests based on standard costs by California Analytical Laboratories.
[b]EPA 600/4 84 04

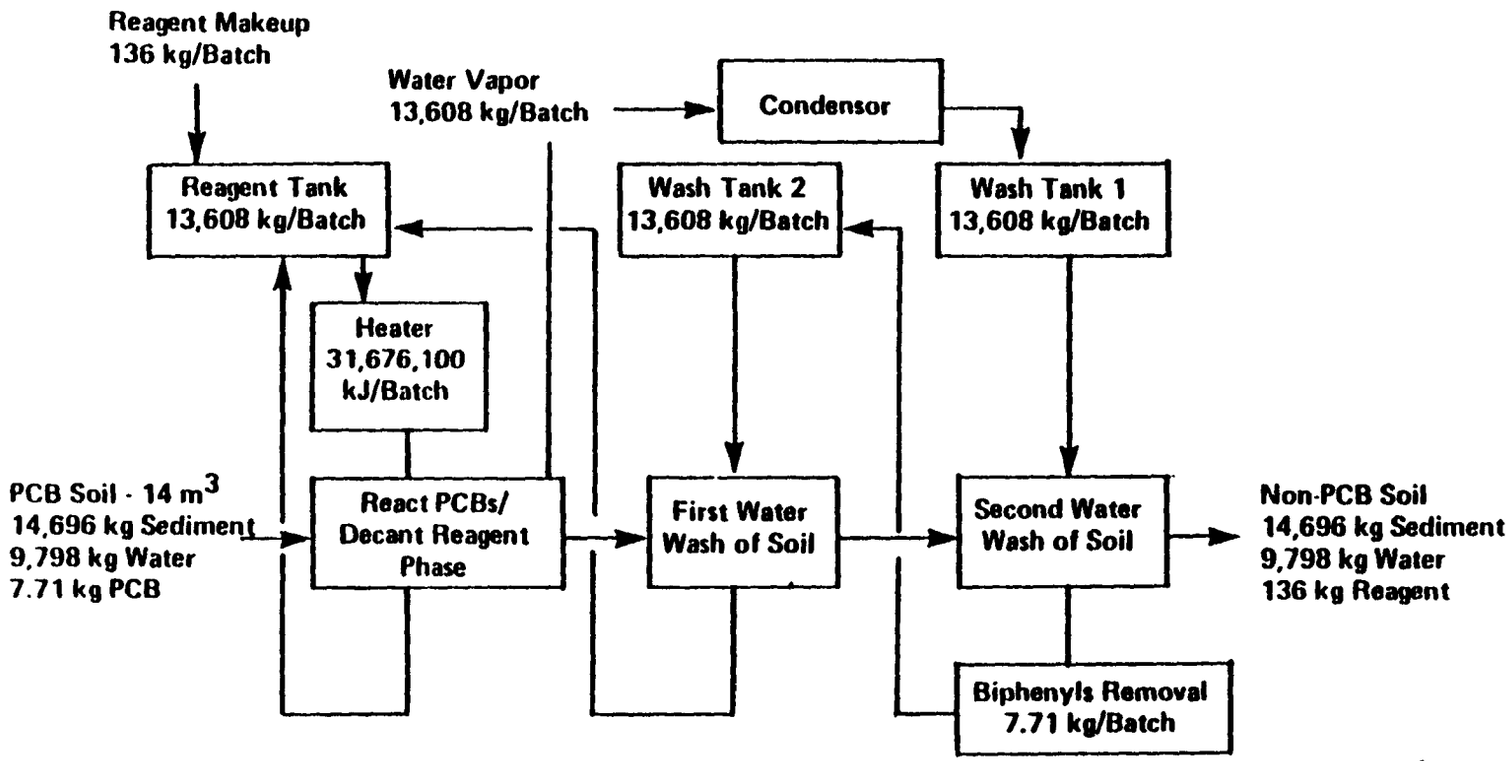

Figure 10. Schematic of scaled-up KPEG with DMSO process.

Waste disposal - 2 kg activated carbon m^3 soil at $2.16/kg = $4.32.

The total cost of application of the treatment process is estimated as follows:

Cost Item	Cost, $/$m^3$ 4-hr cycle	6-hr cycle
Capital	18.82	27.25
Utilities	39.05	39.05
Chemicals	25.66	25.66
Labor	15.40	26.66
Maintenance	1.88	2.72
Supplies and safety equipment	0.80	0.80
QA/QC	1.00	1.00
Destruction of PCBs/waste disposal	4.30	4.30
Subtotal	$106.91	$127.44
Profit	53.46	63.72
Total	$160.37	$191.16

3.6.7 Environmental Characteristics

The KPEG with DMSO process operates with a closed system except for condenser vents and storage tank vents, which are controlled using adsorption by activated carbon. Wastewater and spent reaction mixes have shown no toxicity to living organisms for the treatment of hazardous materials TCDD and chlorobenzene. Some further tests are prescribed to confirm that this non-toxicity still holds when PCBs are treated, and to quantify all discharges from the process.

3.6.8 Health and Safety Characteristics

The process treats hazardous wastes. This requires a site safety plan and a personnel training plan. Spills need to be contained in capture basins beneath the reactors and reagent systems, with provision for pumping to holding tanks. Reagents used are strong bases, especially when not diluted with water. Safe handling requires wearing of protective clothing. Except for requirements for safety in handling hazardous wastes, the process should present no health hazards.

5. Stream stripping of acetone from the sediment.

The PCB solution, product of Step 5, would be treated with a reagent such as KPEG, or incinerated (Brenner, Rugg, and Steiner, 1986). The recovered hydrophobic solvent would be recycled.

New York University proposes to develop the process over the next two years by developing an analytical model and constructing an 50 kg/hr bench-scale system for testing and analysis of the unit components involved. This would provide the basis for design of a 1.1 m^3/hr unit for test and demonstration. The University will need support for this development.

3.7.2 Process Description

The process is described in terms of the extraction of PCBs using acetone as the hydrophylic solvent and kerosene as the hydrophobic solvent. Figure 11 shows a preliminary material balance and flow diagram. The balance is based on treatment of one m^3 (1680 kg) of sediments. The sediment is fed as a 5 wt. percent slurry to a horizontal belt filter (Block 2) where 94.7 percent of the water is removed to yield a solids fraction containing 50 percent sediments. Based on the partition coefficient for PCBs between sediments and water, the sediments will likely contain 98 percent of the PCB content of the total feed.

In the second step on the process (Block 4), PCB-contaminated oil is extracted from the sediments using a hydrophylic-solvent (acetone) in counter-current extractions. The number of stages required for the extraction of an original contamination level to a prescribed residual level can be determined using experimentally measured partition coefficients and stage efficiencies. Acetone is removed from the decontaminated sediments by steam stripping (Block 6).

In the third step of the process, the PCB-containing stream (Block 4) is contacted in a liquid-liquid extractor (Block 11) with a hydrophobic solvent (kerosene) and additional water from acetone recovery, if needed, to drive the PCBs into the kerosene. This step separates the PCBs from the water containing phase and concentrates them. The resulting more concentrated kerosene solution is more suitable for a final chemical destruction treatment.

The two streams which leave this step are the PCB-containing stripping solvent which proceeds to concentration and final destruction, and the

acetone/water mixture containing traces of PCBs. The acetone/water mixture goes to a distillation column (Block 8) where the acetone is recovered and returned to the leaching process (Block 4). The water, contaminated with trace amounts of PCBs, is recycled to the front of the liquid-liquid extractor or pumped to the adsorption unit (Block 15) where it is adsorbed onto clean sediment to close the cycle.

3.7.3 Information from Prior Studies

Research completed thus far has been directed toward:

1. Studying the effectiveness of various solvents for the leaching of PCBs from sediments;
2. Studying the settling behaviors of sediment in various solvents;
3. Selecting appropriate hydrophylic and hydrophobic solvents;
4. Studying the stripping (liquid/liquid extraction) unit operation using the selected solvent pair;
5. Developing a mathematical model for the most relevant steps in the process; and
6. Obtaining a preliminary economic analysis.

Leaching experiments conducted with Waukegan Harbor sludge resulted in very high efficiencies for the solvents acetone, methanol, and isopropanol. Kerosene showed much lower efficiencies except in the case of dry sediment. The results are shown in Figure 12.

Settling experiments conducted with dry topsoil in acetone, methanol, and isopropanol, containing various degrees of water, gave the following order of settling rate, with sediments settling the fastest in acetone:

Acetone > Methanol > Isopropanol

Based on the results from the leaching and settling experiments, the findings from the first year of research, and taking into consideration various physical, chemical, and toxicological properties, a solvent pair has been selected: acetone as the hydrophylic solvent, and kerosene as the hydrophobic solvent.

Extraction experiments conducted with these two solvents with varying water/acetone ratios have shown a partition coefficient between kerosene and

acetone of 30, which allows for the completion of the stripping operation with a very small number of stages.

For the countercurrent leaching process, a mathematical model based on the well known Kremser equation (Treybal, 1968) was derived. The efficiency is

$$\eta_1 = (C_F - D_{Np})/CF = (L^{Np+1} - L)/(L^{Np+1} - 1)$$

where: η_1 = efficiency, fraction

C_F = concentration of PCB, wet feed sediment, wt. fraction

D_{Np} = concentration of PCB, final leached sediment, wt. fraction

L = leaching factor = the ratio R/ME;

where: R = solvent and solute in leaching solution, mass/hr,

E = solvent and solute with leached solids, mass/hr,

M = slope of equilibrium curve; concentration of solute in mixture vs concentration of solute in solution.

N_p = final leaching stage number.

The leaching factor is expressed in terms of a partition coefficient and process parameters by:

$$L = \{Z_s (P_1 + 1) - 1\}/\{Z_s (K_1 - 1) + 1\}$$

where: Z_s = mass fraction of PCBs in solids;

P_1 = mass flow ratio: hydrophylic solvent/dry sediment; and

K_1 = partition coefficient.

The liquid-liquid stripping process was modeled based on the Alders equation (Alders, 1955):

$$E_2 = 1 - [(H-1)/(H^{N+1} - 1)]$$

where: E_2 = efficiency, stripping process;

H = $P_2 \times K_2$:

P_2 = mass flow ratio - hydrophobic solvent/hydrophylic solvent

K_2 = partition coefficient, stripping process;

N+1 = number of stripping stages plus 1.

3.7.4 Additional Data Needs

3.7.4.1 Pilot System--

Further development of the process beyond that discussed in Section 3.7.3 is required. Additional data are required to support the selection of

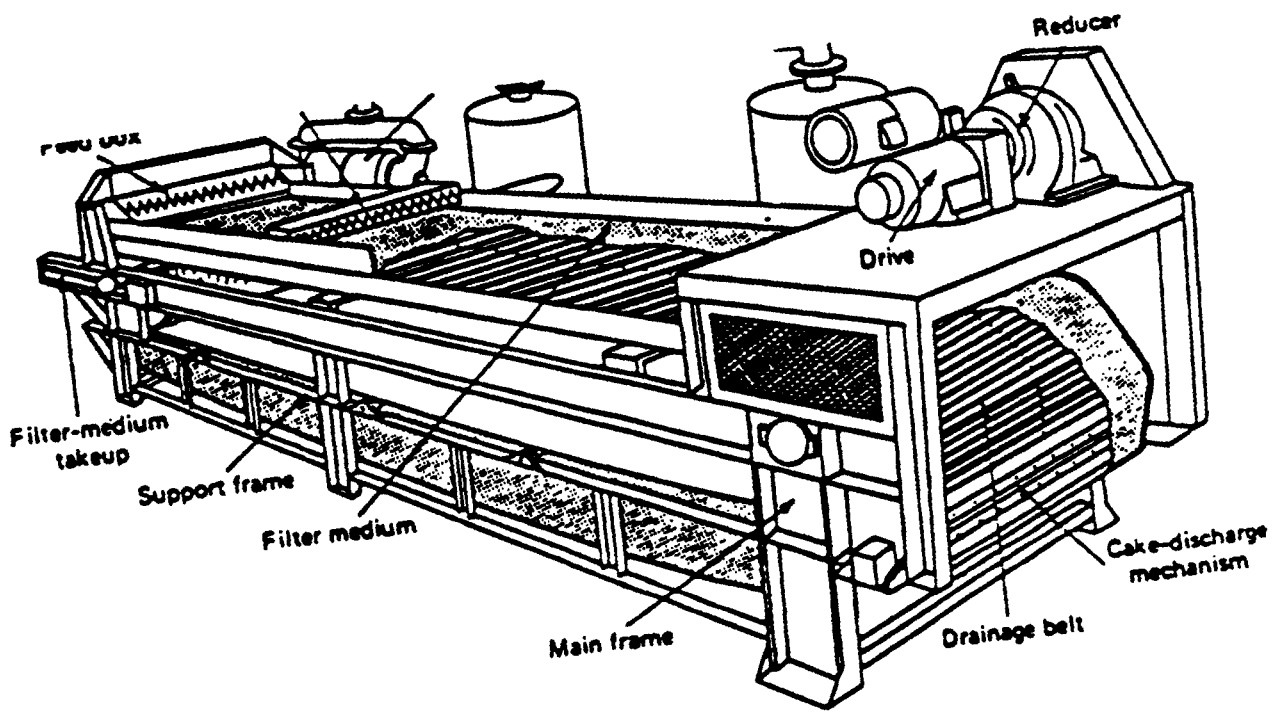

Figure 13. Horizontal belt filter.

This fundamental information (e.g., the height of an equivalent theoretical plate) does not need to be determined using PCBs. After its capabilities are defined, the system would be utilized to define operating parameters for a field test to demonstrate PCB-decontamination.

3.7.4.2 Field Tests--

The preliminary test for PCB field tests would define the extent of unit operation needs for each phase of the process:

Process Operation	Data Needs
Liquid/Solids Separation	Feed rates, handling parameters to achieve 50% solids.
Leaching	Number of stages for reduction to <2 ppm PCBs. Feed ratios, solvents/ sediments.
Extraction	Solvent feed ratios. Number of theoretical plates.
Adsorption	Adsorption column operating parameters. Sediment capacity for treatment of PCB-contaminated water.
Solvent recovery	Steam stripping operating parameters. Distillation operating parameters.

The estimated sampling and analyses for the preliminary tests are shown in Table 25. The single composite feed sample would be composited from the horizontal filter after its operation was set to produce a 50 percent solids feed to the process. Treated sediments are sampled after steam stripping of the solvents. An estimated four stages of extraction would be tested. Three ratios of kerosene to water/acetone are assumed to be tested in the liquid-liquid extraction stage. Similarly, three tests are estimated for the wastewater cleaning to set the amount of sediment required.

The field test sampling requirements (Table 26) are based upon two weeks of continuous operation of a 1.1 m^3 demonstration-size system. Feed samples are composited for each week of operation. Other samples are composited daily

The development of this process through field test and evaluation is estimated by New York University to require $827,000. This includes the

TABLE 26. SAMPLES/ANALYSES FOR LOW ENERGY EXTRACTION PROCESS FIELD TESTS

Sample	Number	Analyses	Method	Estimated cost of analyses[a]
Feed, filtered	2 (composite)	2	Volatiles[b] (T04)	$ 250
		4	Pesticides/PCBs (608/8080)	1,000
		4	Metals (24 by ICB, AA)	740
Decontaminated sediment from steam stripping	10	10	Pesticides/PCBs (608/8080)	2,500
Clean water to environment	10	10	Pesticides/PCBs (608/8080)	2,500
Contaminated acetone/water mixture	10	10	Pesticides/PCBs (608/8080)	2,500
Contaminated kerosene	10	10	Pesticides/PCBs (608/8080)	2,500
Water recycle	10	10	Pesticides/PCBs (608/8080)	2,500
Kerosene recycle	10	10	Pesticides/PCBs (608/8080)	2,500
Conc. PCBs from kerosene recovery	10	10	Pesticides/PCBs (608/8080)	2,500
Decontaminated acetone/ water mixture	10	10	Pesticides/PCBs (608/8080)	2,500
Gas and Vapor vents composite	10	10	Volatiles (T04)	1,250
Total				$23,240

[a]Costs based on standard costs by California Analytical Labs.
[b]EPA 600/4 84 04

3.7.5.2 Energy Requirements and Cost--

The amount of energy required for solvent recovery is a function of process parameters and capacity. The cost of energy is assumed to be $0.26/liter of #2 fuel oil and the energy value to be 37.7 MJ/liter.

3.7.5.3 Cost of Labor--

The labor cost is based on an automated industrial chemical processing plant. Operator hours per day and processing step are calculated as follows:

$$e_2 = e_1 \ (Q_2/Q_1)^n$$

where: e_1 = Operator hours per day and processing step of reference case;
e_2 = Operator hours per day and processing step of case 2;
Q_1 = Process capacity of reference case;
Q_2 = Process capacity of case 2; and
n = Empirical constant.

The values used in this evaluation are: e_1 = 18 h/d x step;
Q_1 = 9.07 mt/d
n = 0.22

The number of foremen and chemists are taken to be 15 percent of the number of operators. In addition to these workers, there is one site manager.

The hourly wages are assumed to be:

Operators:	15 $/hr
Foreman:	18 $/hr
Chemist:	25 $/hr
Manager:	60 $/hr

Based on these assumptions, the staff requirements and the labor cost per m^3 of treated sediment can be estimated. The results are given in Table 28.

TABLE 28. LOW ENERGY EXTRACTION PROCESS, LABOR REQUIREMENTS

Process capacity		Staff per 8-hour shift				Labor cost of Treated Sediment
metric ton/day	m^3/day	Operators	Foremen	Chemists	Mgr.	$/$m^3$
958	570	11	1	1	1	9.60

TABLE 30. LOW ENERGY EXTRACTION PROCESS COST OF TREATMENT

Cost Item	Incineration of extracted PCBs as a 50% solution	Incineration of extracted PCBs as a 10% solution
Capital	$ 9.50	$ 9.50
Energy	11.00	11.00
Labor	8.60	8.60
Maintenance	1.40	1.40
Solvent/acetone, kerosene	0.08	0.08
Supplies and safety equipment	0.80	0.80
Waste treatment (KPEG)	0.77	5.40
QA/QC	1.00	1.00
Subtotal	$33.15	$37.78
Profit	16.58	18.89
Total	$49.73	$56.67

facility in Natick, Massachusetts and at the CECOS International Falls site, Niagara Falls, New York.

3.8.2 Process Description

The process is described based on discussions with the developers and data supplied by them. Figure 15 shows a schematic flow sheet for the MODAR process as it would be applied to sediments. A full-scale system would include screening to remove rocks and large pebbles if this were not done as part of the dredging operation. The feed pump (e.g., Gardner-Denver mud pump) would handle the range of sediment particle size up to about 2 mm diameter, at 20-40 percent solids.

Feed to the process is controlled to an upper limit of heating value of 4187 kJ/kg (1800 Btu/lb). The Hudson River sediments lack sufficient heating value, therefore fuel addition will be necessary. A combination of preheat by exchange with process effluent and fuel addition is a more cost-effective option. As shown, a portion of the supercritical process effluent may be recycled to the reactor by a high-temperature, high-pressure pump to raise the combined fluids to a high enough temperature to maintain rapid oxidation reactions in the continuously fed reactor.

Oxygen, stored as a liquid, is pumped to system pressure, preheated, and metered into the reaction vessel. Alternatively, air can be compressed and used as the oxidant.

When wastes contain organic heteroatoms which produce mineral acids (HCl in the case of PCBs) and it is necessary to neutralize these acids, caustic is injected into the feed system to form appropriate salts.

Feed lines would be sized to provide a flow velocity sufficient to keep the solids suspended. In the reactor, at a temperature of 400 to 650 °C and a pressure of 22.1 to 25 MPa, the oxidant is completely miscible with the solution and the sediments are suspended in a single homogeneous fluid. Organic contaminants are oxidized rapidly. A residence time of less than a minute is expected. A second-stage reactor, as shown, is used to insure complete conversion of residual CO to CO_2.

Inorganic salts have a low solubility in supercritical water and will fall to the bottom of the solids separator where they are removed with the treated sediments.

Gaseous products of reaction leave the reactor along with supercritical water. The reactor effluent is cooled to discharge carbon dioxide and water at atmospheric conditions.

Heat remaining in the effluent stream after the slurry preheat exchanger can be used for lower level heat requirements or be dissipated.

The cooled effluent from the process separates into a liquid water phase and a gaseous phase, the latter containing primarily carbon dioxide along with oxygen which is in excess of the stoichiometric requirements, and nitrogen when air is the oxidant. Pressure letdown and separation is carried out in multiple stages in order to minimize erosion of valves as well as to optimize equilibria. Clean sediment and salts may be removed from the separator as a cool brine/slurry through multiple letdown stages and are either dried or discharged as a brine/slurry depending upon operating requirements.

Key parameters monitored for the process include the effluent gas CO, and O_2 concentration, the liquid effluent TOC, and the liquid effluent chloride concentration. NO_x compounds are monitored in the gas, but have never been detected at the operating temperatures employed.

3.8.3 Information from Prior Studies

MODAR has successfully conducted laboratory experiments decontaminating dioxin tainted soil. They claim to have achieved reduction to background levels. This work was conducted under an agreement of confidentiality with a client, therefore it has not been shared with us.

3.8.4 Pilot and Field Tests

MODAR, together with CECOS International of Buffalo, New York, have completed a field, pilot-scale demonstration of the process for the destruction of hazardous organic waste materials. Two waste streams were destroyed in the field tests: an aqueous-based waste contaminated with several organic priority pollutants, and an organic transformer dielectric fluid contaminated with PCBs. The demonstration tests were performed at the CECOS' Niagara Falls, New York Hazardous Waste Treatment and Disposal Facility.

The description of the test of the PCB-contaminated fluid given below is taken from the report prepared by Carl N. Staszak, K. C. Malinowski, and W. R. Killilea (1987). A schematic flow sheet of the process as applied to liquid wastes is shown in Figure 16. Figure 17 shows a plot plan of the installation

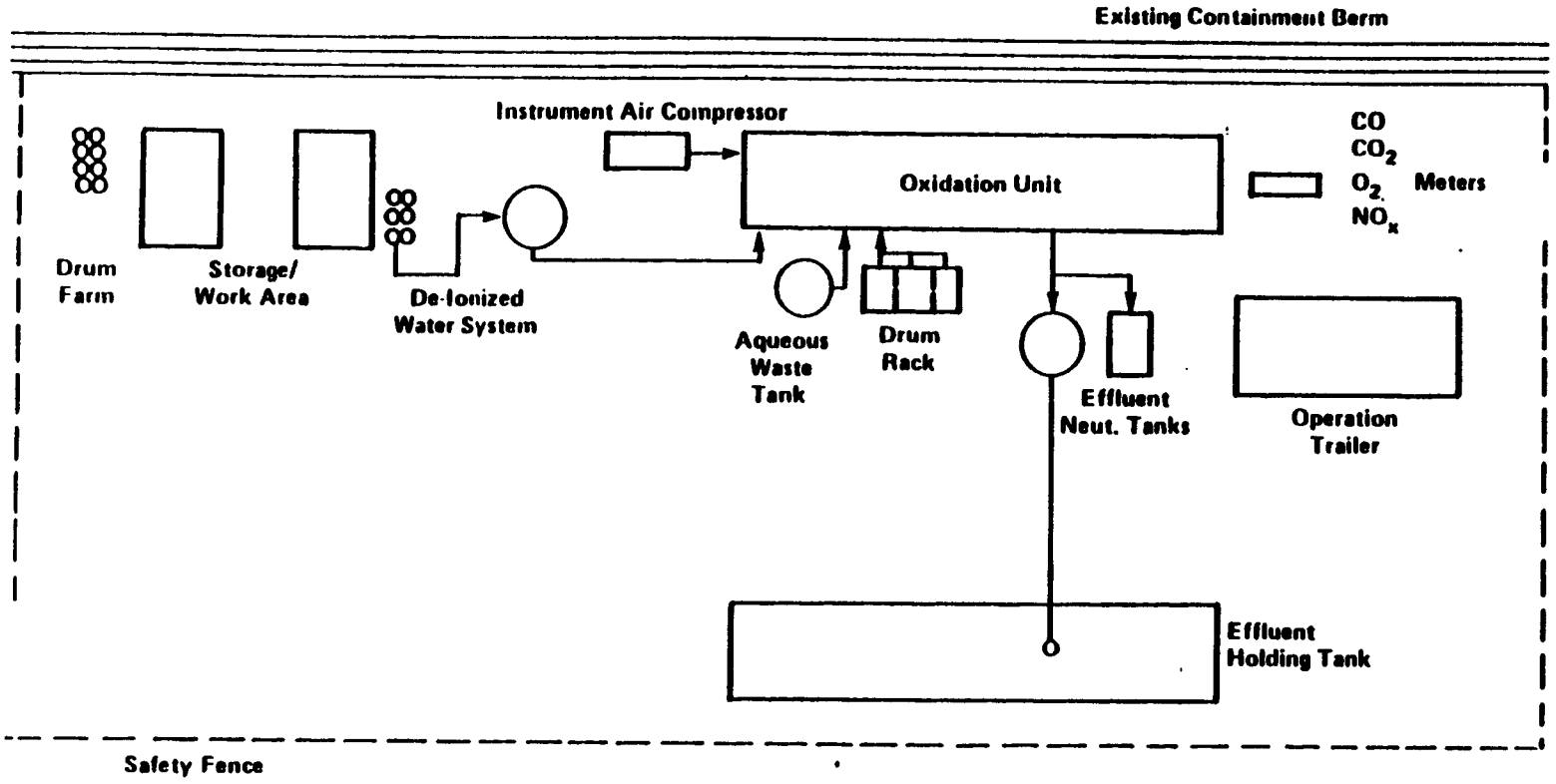

Figure 17. MODAR Supercritical Water Oxidation process demonstration plot plan.

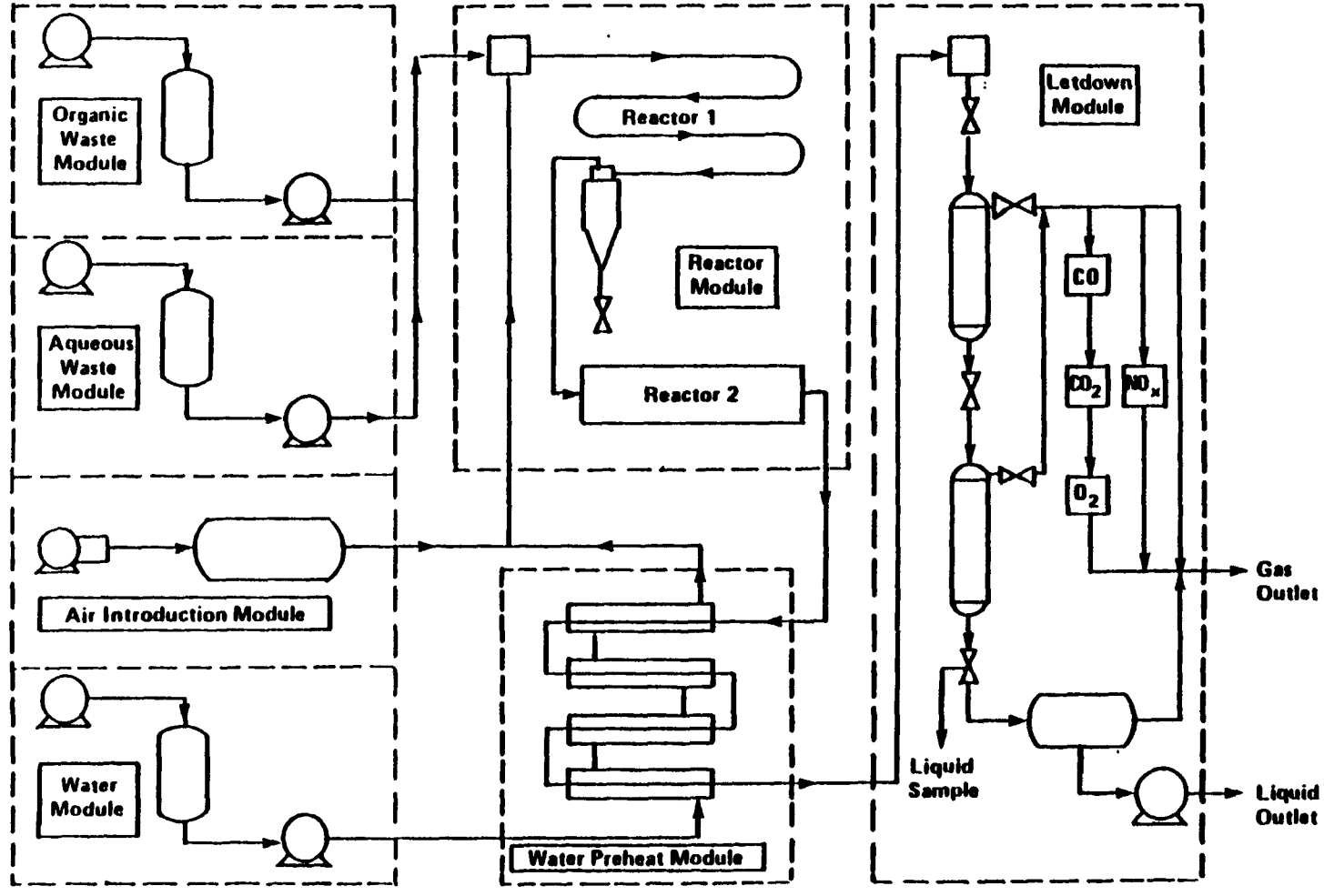

Figure 18. Schematic showing major components of the MODAR pilot unit.

TABLE 31. WASTE DESTRUCTION EFFICIENCY
MODAR/CECOS DEMONSTRATION ORGANIC WASTE TEST

Contaminant	Feed rate (g/min)	Liquid effluent rate (g/min)	Gaseous effluent rate (g/min)	Destruction efficiency (%)
PCB	9.1×10^{-2}	$<3.1 \times 10^{-7}$	4.7×10^{-6}	>99.995

TABLE 32. ELEMENTAL MASS BALANCE SUMMARY
PCB WASTE

Element	Quantity in (g/min)	Quantity out (g/min)	Balance Closure (%)
C	49	48	98
O	251	278	111
Cl	0.055	0.071	129

3.8.5 Additional Data Needs

Discussions with MODAR determined that it would be best to demonstrate viability on their bench-scale unit. This would avoid the costs of modification of the pilot system for slurry handling and onsite demonstration until the process had been proven out. Bench tests with the PCB-laden sediments to be treated would be conducted after modification of the bench unit to a configuration geared to solids handling rather than for liquid feeds as it is now set up to support the company's commercial activities. The sediment feed probably would require grinding and sizing to 38 microns, maximum, to permit use of the Lewa reciprocating pumps employed on this unit. A pilot- or full-scale unit would utilize larger pumps such as are used in oil field work, with valves that could handle the total (screened) sediment feed directly. Additional solids-handling equipment downstream from the reactor would be provided for the bench unit. Previous work has included the pumping of feces and urine

MODAR is evaluating a conceptual feed introduction design which may allow bench-scale testing of a broader range of particle sizes than is mentioned above. If particle size reduction and classification is required, MODAR suggests that it be carried out by a laboratory with proper equipment to accomplish this type of work. Any discarded sediments from the preparation process could be subject to sampling and testing for PCBs.

The performance test program as described would require about 20 kg (dry basis) of contaminated sediment. If these contaminated sediments must be manifested for shipment then permits will be needed for MODAR to receive the shipment. If no permits are required, then MODAR may be able to conduct the tests under the provisions of Massachusetts Department of Environmental Quality Engineering Regulation 310 CMR paragraph 30.353: Insignificant Wastes. The scaleup test program would required about 400 kg (dry basis) of uncontaminated sediments with characteristics similar to those of the contaminated sediments.

MODAR estimates the cost of the performance tests to be $50,000 - $75,000. The cost for the scaleup tests will be $325,000 - $350,000. The total cost of the program is approximately $400,000.

Table 33 shows the sampling and analyses estimates for conducting performance tests. The scaleup tests will not require sampling and analyses. Four feed samples are prescribed to determine the PCBs in any oversized residue from the grinding of sediments preparatory to their processing in the test unit. The total estimated cost of T and E is $483,000. This total cost estimate may be broken down into costs for performance testing (analyses - $8,000; T and E support - $50,000; operating cost - $75,000; total - $133,000) and scaleup costs ($350,000).

3.8.6 Probable Cost of Treatment After Demonstration

The MODAR Supercritical Water Oxidation process can be scaled to several sizes depending on the magnitude of the application. For use in cleaning Hudson River sediments, a total of 380,000 m^3 are to be treated over a 2.5-year period. At a 73-percent utilization rate projected by the developer, this would require a nominal capacity of 570 [illegible] per day of sediment. This utilization is lower than the 85 percent used for KPEG to allow for more frequent shutdowns for safety inspection and any modifications that may be

required. The capacity could be supplied by a pipe reactor, with a 17.3 cm (6.8 in.) to 21.6 cm (8.5 in.) ID pipe.

The process flow rates for a system of this size are shown in the flow sheet, Figure 15. This volume provides a residence time of less than one minute for the total feed at 25.51 MPa and 550 to 600 °C (3700 lb/in^2 and 1022 to 1112 °F). The total feed is: 0.4 m^3/min sediments; 0.998 m^3/min water; 0.029 m^3/min fuel; and 0.082 m^3/min liquid oxygen.

The material balance assumes complete conversion of the fuel (No. 2 fuel oil) and contaminants to carbon dioxide, and retention of 10 wt. percent moisture in the discharged sediment. For this balance, sediments were considered to be inert and to pass through the process without loss.

3.8.6.1 Energy Usage--

Energy requirements for the process are largely involved with heating the reaction mix to the required temperature. The processing of one m^3 of sediments would require an estimated 3.2 x 10^6 kJ of energy, calculated as follows:

Mass of sediment/m^3	1680 kg
Mass of water processed with sediment	2520 kg
Mass of fuel	64.4 kg
Mass of oxygen	236 kg
Electrical energy to pump sediment, water, fuel, and oxygen	0.27 x 10^6 kJ
Fuel energy to heat reactor fluid	2.9 x 10^6 kJ
Total energy	3.2 x 10^6 kJ

The feed is preheated to 400 °C by exchange with the reactor effluent. Additional energy is required to attain the prescribed 600 °C reaction temperature.

Volatile solids in the sediments could provide as much as 100% of the required fuel energy. For sediments with negligible heating value, the cost of fuel, assuming an energy value of 45,100 kJ/kg (19,400 BTU/lb), a density of 0.876 kg/L, and a heat loss of 10 percent would be:

Cost Item	Cost $/m^3
Capital equipment	$23.68 - $35.14
Utilities	
Electricity	6.84
Fuel Oil	0.00 - 20.98
Chemicals	17.55
Labor	3.55
Maintenance	2.37 - 3.51
Supplies/safety equipment	0.80
Water treatment	1.40
QA/QC	1.00
Subtotal	$57.19 - $90.77
Profit	28.60 - 45.39
Total	$85.79 - $136.16

The range in capital cost is reported by the developer to be due primarily to the uncertainty in the size (and therefore cost) of the heat exchanger design. There is a trade-off of reduction in fuel value and oxygen requirements with the heat exchanger cost. This limits the optimum preheat temperatures to 400 to 500 °C.

3.8.7 Environmental Characteristics

The MODAR Supercritical Water Oxidation process is projected to handle sediments at a 40 wt. percent concentration. Should the dredged sediments require filtration to remove excess water, the removed water would be subject to treatment before discharge to remove any PCBs. This has been included in the estimated treatment costs.

Effluent gases are to be monitored for CO as a process control parameter. They are not expected to contain any PCBs, however the commercial operation would require monitoring for PCBs to insure against the emission of volatilized PCBs in the event of a process upset, or during shutdown.

Should pretreatment of the sediments by grinding to reduce particle size be required, this operation could be a source of PCB-contaminated emissions. Suitable controls should be applied to this operation.

water slurry of the sediment. The treated slurry is discharged after separation from the liquid propane which contains dissolved contaminant. The propane solution is fed to a separator where the solvent is removed by vaporization and recycled. The contaminants are drawn off as a concentrate for final treatment. The process has been tested for PCB-containing refinery sludge. The PCB content of the solids component of the sludge was reduced to 5 ppm. Additional extractions may be required to achieve the desired 2 ppm level.

The company has a small portable 1-liter test unit for preliminary evaluations of the potential of the process using 0.56 kg of feed, and will have a mobile propane pilot system by July, 1987. Preliminary tests of Hudson River sediments using the portable test unit would be conducted by C. F. Systems at their expense. Larger-scale tests would require financial support.

3.9.2 Process Description

The CFS Propane Extraction process is illustrated by the simplified flow chart, Figure 19. Applied to the decontamination of sediments, a slurry would be fed into the top of the extractor. Propane, condensed by compression at approximately 20 °C flows upwards through the extractor, making non-reactive contact with the slurry. The propane is allowed to accumulate until a pressure of 1034 to 1379 kPa (150 to 200 lb/in^2) is attained. The propane dissolves the oils in the sediment, including the PCBs, and extracts most of these materials from the water. Because of the low viscosity of the propane and its low density, the separation of phases is expected to be rapid and essentially complete. The cleaned sediments and water are withdrawn from the extractor. Depending upon the material and the level of cleaning to be attained, one or more extractions may be necessary. A typical cycle of operation consists of charging the reactor, adding the propane, agitating for 5 minutes, allowing to settle for 5 minutes, and removal of the top (propane) layer while refilling with propane, in order to maintain the set pressure of operation.

As the propane from the first extraction leaves the extractor, it passes to a separator through a valve where the pressure is partially reduced. The pressure may typically be 345 kPa (50 lb/in^2) after th valve. In the separator, the propane is vaporized and recycled as fresh solvent. The extracted PCBs and other organics are drawn off from the separator for further treatment and destruction.

The proportion of propane vaporized, condensed, and recycled can be upward of 90 percent. The remaining 10 percent or less retains the extracted contaminant.

As an optimal step, the extracted PCBs may be reacted with a reagent while dissolved in or mixed with the propane at the higher pressure (Modell, 1978).

An important aspect of this process is the use of propane vapor recompression which restores the propane to its solvent-condition and utilizes the overhead vapor enthalpy as the boiler heat source. In order to accomplish this, the temperature at which the heat is delivered from the vapor must be raised sufficiently to provide a ΔT driving force for heat transfer to the still bottoms in the boiler. This is achieved by vapor compression, so that the condensation and enthalpy release will occur at a temperature higher than the boiling point of the boiler liquid.

The process as described operates below the critical state for propane (96.8 °C, 4118 kPa). Where the solubility characteristics of the solvent are favorable to the use of such lower temperatures and pressures, the costs of the pressure vessels are reduced..

3.9.3 Information from Prior Studies

The following results were obtained in treating a PCB-contaminated refinery sludge composed of 60 wt. percent solids, 20 wt. percent water, and 20 wt. percent oils.

Component	PCB, ppm
Sludge feed	62[a]
Extract	192[b]
Residue Solids	5[b]

[a]By material balance
[b]By analysis

These results were obtained using a bench-scale reactor of 1-L capacity. The cylindrical reactor was half filled with sludge, and liquid propane was pumped in so as to flow upward through the sludge and accumulate until a pressure of 1034 kPa was attained. The phases were mixed for 5 minutes, allowed to settle, and the bottom layer withdrawn for analysis. The extract was also

TABLE 34. SAMPLES/ANALYSES FOR CFS EXTRACTION PROCESS

Sample	Number	Analyses	Method	Estimated cost of analyses[a]
Feed	1 (composite)	1	Volatiles[b] (T04)	$ 125
		2	Pesticides/PCBs (w/cog. scan)	500
		2	Metals (24 by ICP, AA)	370
Propane extract	3 (3 stages)	3	Pesticides/PCBs (w/cog. scan)	750
		3	Metals (24 by ICP, AA)	555
Treated sediments	3 (1 each extraction)	3	Pesticides/PCBs (608/8080 w/ cog. scan)	750
		3	Metals (24 by ICP, AA)	555
Vent gases	3 (1 each extraction)	3	Volatiles (T04)	375
Wastewater (water discharged with sediments)	1 (composite)	1	Pesticides/PCBs (608/8080 w/ cog. scan)	250
		1	Metals (24 by ICP, AA)	185
Total per test				$4,415
Total, four tests				$17,660

[a]Costs based on standard costs by California Analytical Laboratories.
[b]EPA 600/4-84-04.

TABLE 35. CFS EXTRACTION PROCESS, LABOR REQUIREMENTS

Type	Number per shift	Total	Hours/day	$/day
Operator	6	18	144	2,160
Foreman	1	3	24	432
Chemist	1	3	24	600
Manager		1	8	480
Total				3,672
$/m^3 sediment treated				6.45

Treatment of the extracted PCBs could be accomplished chemically or by incineration. Generally, if the concentration of PCBs in the material to be treated is <1 percent, KPEG or other chemical treatment would be appropriate cost wise. For concentrations between 1 and 10 percent, such treatment would likely still be appropriate. For concentrations of PCBs in oil or other liquid ranging to 50 percent PCBs, incineration is a cost-effective method of destruction (Peterson, 1987).

The full-scale treatment of sediments at 570 m^3/day would yield 287 kg/day of PCBs from a feed with a PCB-concentration of 300 ppm. The weight of 50 percent solution would be 574 kg/day (1262 lb/day). This quantity could be stored in 4 55-gallon drums. Each filled drum would weigh an estimated 445 lbs (allowing 45 lbs for the drum). The estimated cost of incineration of this PCB extract is $0.77/m^3 of sediment treated, computed using an incineration cost of $0.45/lb and a transportation cost of $3.75 per loaded mile (SCA Chemical Services, 1987).

1 m^3 sediment yields 0.504 kg PCBs

1 drum 50% concentrate holds 90.9 kg PCBs ≈ 180.4 m^3 of treated sediments

1 truckload x 40,000 lbs/load x 1/445 = 90 drums ≈ 16,234 m^3

$$\text{Transportation cost: } \frac{\$3.75/\text{mi} \times 800 \text{ mi}}{16{,}234 \text{ m}^3} = \$0.18/\text{m}^3$$

Incineration Cost: 0.504 x 2.2 lb/kg x $0.45/lb = $0.50/m^3

Barrel Cost: $15/barrel x 1/180.4 m^3 = $0.09/m^3

Total Incineration Cost: $0.18 + 0.50 + 0.09 = $0.77/m^3.

TABLE 36. COST ESTIMATES, C. F. SYSTEMS ORGANIC EXTRACTION SYSTEM $/m^3$ OF SEDIMENT

Cost Item	Cost/m^3 $5 per barrel[a]	$10 per barrel
Capital equipment	$100.68	$201.37
Utilities		
Fuel oil	10.43	10.43
Chemicals	11.00	11.00
Labor	5.45	5.45
Maintenance	10.07	20.14
Supplies/safety equipment	0.80	0.80
QA/QC	1.00	1.00
Destruction of PCBs	0.77	0.77
Subtotal	$140.22	$250.96
Profit	14.72[b]	14.72[b]
Total	$154.92	$265.68

[a]C. F. Systems' estimate for 42 gallon barrel of waste for treatment.

[b]Profit on capital and maintenance is included in the amounts listed. The remaining items are costed at the uniform rate of 50%.

Convective currents within the melt distribute the wastes evenly. During the process, off gases emitted from the molten mass carry a small percentage of volatilized organics (typically 0.05% of the inventory being vitrified). The gases are collected by a hood over the area and routed to a treatment system. When power to the system is turned off, the molten volume begins to cool, producing a block of glass and crystalline material that resembles natural obsidian or basalt. The subsidence that occurs can be covered with uncontaminated backfill.

The principle of ISV operation is based on joule heating, which occurs when an electrical current passes through the molten mass. As the molten mass grows, resistance decreases; so to maintain the power level high enough to continue melting the soil, the current must be increased. This is accomplished by a transformer equipped with multiple voltage taps and a saturable reactor power controller. The multiple taps allow for more efficient use of the power system by maintaining the power factor (the relationship between current and voltage) near maximum. The process continues until the appropriate depth is reached. Melt depth is limited as the heat losses from the melt approach the energy level that is deliverable to the molten soil by the electrodes.

3.10.3 Information from Prior Studies

The process has been tested for PCB-contaminated soils on a small scale shown schematically in Figure 20 (Timmerman, 1986).

1. A 20-cm-diameter by 30-cm-deep zone of loamy-clay soil, containing 500 ppm PCBs was centrally located in a sealed metal container. The contaminated soil was surrounded by noncontaminated soil and was 25 cm beneath the surface.

2. Four cylindrical molybdenum electrodes were set on a 23-cm square to surround the contaminated soil. The electrodes extended to a depth of 61 cm.

3. A path for electric current was established by placing a small amount of graphite and glass frit mixture between the electrodes on the soil surface.

4. Off-gases were collected and passed through a dual-stage activated carbon filter to contain any PCBs or decomposition products released. Online grab samples of exit gases were taken from a sample port. the samples were analyzed for chlorine and hydrogen chloride.

5. Electric power was applied for a 6-hour period. A vitrified block (220 kg) and 0.14 m^3 was produced. The melt extended to a depth of 81 cm.

6. In addition to sampling off-gas emissions, residues in off-gas lines and containment equipment, the migration of PCBs into the surrounding soil, and the residual level of PCBs in the vitrified block were monitored.

Data from off-gas release and soil container smears provided the most quantitative values on the release from the melt during and after processing. Information collected from the adsorption tubes and the smear sample extractions indicated a 4.4-mg total off-gas emission, 1.1 mg of which was deposited on container surfaces. These off-gas releases accounted for 0.05 wt% of the initial PCB quantity, corresponding to a greater than 99.9 percent thermal destruction and removal efficiency for the ISV process. This does not include the removal efficiency of the off-gas system; therefore, a system DRE cannot be calculated form the available data. Activated carbon filters can effectively contain any of the off-gas emissions.

Analyses of the florisil adsorber also indicated a small amount of furan (PCDF) and dioxin (PCDD) generated in total quantities of 0.4 ug and 0.1 ug, respectively. Only the tetra and penta isomers of the PCDF were detected, and only the hepta and octa isomers of the PCDD were detected. These small quantities are less than the reported amounts typically generated from a PCB fire and do not represent a hazardous operational concern.

The vitrified mass showed no detectable residual level of PCB, which is to be expected considering the high process temperatures. Also, no PCB contamination was detected in the majority of soil surrounding the vitrified block, indicating that migration outside the vitrification zone was not a significant problem. A few samples directly adjacent to the block contained measurable concentrations up to 0.7 ppm, which is acceptable. These results indicated that the vitrification rate must be higher than the diffusion rate of volatilized PCBs in soil, thus overcoming migration away from the hot molten mass.

The product of this process is a solid glass and crystalline block. This form may be more costly to redeposit. There may be fewer options than would be available for ordinary sedimental material. The nature and extent of emissions from the melt would likely vary from one type of sediment to another. Sediments containing significant amounts of organic matter would lose all of

TABLE 37. SAMPLES/ANALYSES BATTELLE IN SITU VITRIFICATION PROCESS, DEMONSTRATION TESTS

Sample	Number	Analyses	Method	Estimated cost of analyses[a]
Feed (raw sediment)	2	2	Pesticides/PCBs, (608/8080 w/cogener scan)	$ 500
		2	Metals (24 by ICP, AA)	370
Off-gas, raw	8[b]	8 florisil 8 scrub solution	Pesticides/PCBs, (608/8080 w/cogener scan)	2,000
			Metals (24 by ICP, AA)	1,480
			Sulfates, Nitrates	576
after scrubber	2	2	Pesticides/PCBs, (608/8080 w/cogener scan)	500
		2	Metals (24 by ICP, AA)	370
		2	Sulfates, Nitrates	144
after HEPA filter	2	2	Pesticides/PCBs, (608/8080 w/cogener scan)	500
		2	Metals (24 by ICP, AA)	370
		2	Sulfates, Nitrates	144
		2	Polychlorinated dibenzo furans and dibenzo-p-dioxins HRGC/HRMS	2,200
scrubber water	2	2	Pesticides/PCBs, (608/8080 w/cogener scan)	500
		2	Metals (24 ICP, AA)	370
		2	Sulfates, Nitrates	144

(Continued)

$$\frac{\$1,519,000 \times 12 \times (319/325.3)}{380,000} = \$47.04$$

where: 319/325.3 = the Chem. Eng. plant cost index ratio: April, 1987/Annual, 1985.

Labor costs were calculated using the standardized rates for this study, applied to labor requirements projected by Battelle for a single treatment system. For the set of twelve systems, the management requirements were reduced to a staff of two instead of one per system, and an extra operator was added to provide two per shift per system. Six chemists were included for qualify control, one for each set of six units per shift. Maintenance was estimated at one man for each two systems per shift. The total daily labor and labor per m^3 of soil treated, was estimated as follows:

Labor category	Hours/day	Cost, $/day
Manager	16	$ 960
Maintenance	144	2,160
Operators	576	8,640
Chemists	48	1,200
Total		$12,960
Cost/m^3 treated (5% moisture) $12,960/(12 x 52.4) =		$20.61
Cost/m^3 treated (25% moisture) $12,960/(12 x 41.8) =		$25.84

Consumable costs were estimated using the standardized electricity cost of $0.09/kWH, and other consumables as estimated by Battelle:

Electrodes	$98/$m^3$
Secondary waste	$1.85/$m^3$
Electricity, 5% moisture (392,000 kWH x 48 settings x $0.09)/13,500 m^3	$125.44/$m^3$
Electricity, 25% moisture (414,000 kWH x 48 settings x $0.09)/12,200 m^3	$146.60/$m^3$

A site cost of $2/$m^3$ was included as Battelle's estimated for transport of equipment, site clearing, and acquiring/applying backfill material as needed

The total cost of application is estimated as follows:

scrubber and HEPA filters were effective in removing the residual zinc and other elements entrained in the off-gas. A schematic of the off-gas treatment system for this process is shown in Figure 21.

During ISV operations, the mass mean particle diameter ranged from <0.1 to 0.8 μm. When combustible wastes were present, the entrained particle size was larger, averaging 1.4 μm.

During ISV of a waste site, any solid combustible inclusions within the soil are pyrolyzed into combustible gases at the high temperatures of the melt. The pyrolysis gases move upward through the molten zone, expanding as they are heated. Combustion does not occur until the pyrolyzed gases contact air at the surface of the molten soil, since the molten glass is reducing in nature. With a cold cap or an insulated surface, the release of gases occurs primarily near the electrodes, because the glass is hotter and has a lower viscosity in the areas of highest current density. When a cold cap is not present, release of gases is more uniform over the molten surface. Several effects of these gas releases must be considered in establishing the design of the hood and off-gas system:

- Pyrolysis gases carry with them to the off-gas system a portion of elements associated with the combustible waste. (Note that only the contaminants associated with the combustibles are available for release - those already incorporated in the melt remain in the vitreous mass.)

- The protective, subsided cold cap may be broken up by active gas releases, thereby increasing heat losses and hood temperatures.

- Pyrolysis gases that are superheated in the molten zone burn in the hood plenum, thereby creating high temperatures in the hood and increasing the heat removal requirements of the off-gas system.

- The gas generation rate of buried combustibles and the air required to combust the gases determine the maximum off-gas flow rate required for that application.

The magnitude of the effects of the gas releases is directly proportional to the rate at which pyrolyzed gases are generated and released. Battelle's engineering-scale and pilot-scale tests have shown that combustible gas release is sporadic and may occur in a very short time period. During an engineering-scale test, 0.2 kg of simulated combustible waste was placed inside a metal canister. Active surface combustion of the pyrolyzed gases occurred over an 18-min period during a 12-h test. Thus the release period

was only 2.5% of the total ISV time. Similar observations have been made during the pilot-scale tests.

Vitrified soil blocks were analyzed to determine their chemical durability with a series of tests including 24-h soxhlet leach tests, Materials Characterization Center tests (MCC-1) (MCC 1981), and hydration. The soxhlet leach rate for all radionuclides was less than 1×10^{-5} g/cm^2/day, which is an acceptable value. A 28-day MCC-1 test was also conducted on a contaminated soil sample that was vitrified in the laboratory at 1600 °C. The overall leach rate of the vitrified soil (2×10^{-7} g/cm^2/day) was higher than the rates for the borosilicate and aluminosilicate glasses. Longer vitrification times at temperatures like those experienced in the field are expected to lower the observed Pu leach rate making it more comparable to HLW glasses. As an example of the excellent leach characteristics of field samples, TRU leach rates from the vitrified block produced during the pilot-scale radioactive test (PSRT) were too low to be detectable.

3.10.8 Health and Safety Characteristics

With the controls applied to exit gases from the treatment, the process offers good health and safety characteristics, especially for sediments containing no radionuclides. Since radioactive cesium is present in the Hudson river sediments, Battelle's safety analysis for potential exposure to radionuclides is summarized here.

To analyze the occupational and public safety of routine and nonroutine ISV operations for both the short and the long term, Battelle selected a representative transuranics (TRUs) contaminated waste site as a reference (Oma et al. 1983). Radionuclide release rates from the soil during vitrification were estimated. Ten times the waste inventory for the site was the basis for the radionuclide source term to account for concentrated TRUs around the distribution pipe(s).

Tables 38 and 39 give the radiation doses from routine operations in the short term for the ISV worker and the public, respectively. For all routine exposures, radiation doses are estimated to be well below the federal guidelines set by the Department of Energy (DOE). Of all activities associated with ISV operations, the maximum occupational dose is expected to occur while the worker is placing electrodes in the soil. The low exposure levels can be seen in Table 38, where the occupational dose for this activity is compared to

TABLE 40. OCCUPATIONAL DOSES FROM ACCIDENTAL RELEASES
(120-h run, 15 settings, concentrated inventory)

Accident	Number of personnel	Length of exposure	1st-year dose commitment to each worker, rem		
			Total body	Bone	Lung
Uncontrolled venting	1	1 min	1×10^{-3}	2×10^{-2}	2×10^{0}
Break in off-gas line	1	5 min	6×10^{-3}	1×10^{-1}	1×10^{1}
Excess overburden removal	2	10 min	3×10^{-3}	4×10^{-2}	5×10^{0}

TABLE 41. PUBLIC DOSE COMMITMENTS FROM POSTULATED ABNORMAL OCCURRENCES

	Maximum exposed individual, rem	Population, man-rem
Uncontrolled Venting		
1st-yr dose (lungs)	5×10^{-5}	2×10^{-1}
50-yr dose (bone)	5×10^{-4}	2×10^{0}
Off-Gas Line Break		
1st-yr dose (lungs)	3×10^{-2}	1×10^{2}
50-yr dose (bone)	3×10^{-1}	1×10^{3}
Excessive Overburden Removal		
1st-yr dose (lungs)	1×10^{-2}	3×10^{1}
50-yr dose (bone)	9×10^{-2}	3×10^{2}

3.10.9 When Process Can Be Made Available

Using the standardized T and E time requirements (7.5 months) and adding 12 months to build and demonstrate a full-scale system (Timmerman 1987), the projected schedule to ready this process for this application is 19-24 months, depending on whether all 12 systems are constructed at once, or 11 are constructed after demonstration of the first.

Test and Evaluation	2.5 months
Report	2 months
Approval by EPA	3 months
Design, procure, fabricate full-scale system and conduct onsite demonstration	11.5 months
Construct additional units	5 months
Total	19 - 24 months

Value of d	
1.0-0.99	Represents the ultimate level of the characteristic y. Improvement beyond this point would have no appreciable value.
0.99-0.80	Acceptable and excellent. Unusually good performance.
0.80-0.63	Acceptable and good.
0.63-0.40	Acceptable. Some improvement is desirable.
0.40-0.30	Borderline acceptability.
0.30-0.01	Unacceptable. This one characteristic could lead to rejection of the process.

The scale of d so developed is a dimensionless scale to which any characteristic may be transformed so that it may be interpreted in terms of its desirability for the intended application. In this evaluation, the most cost-effective final process was sought that could be available in the shortest reasonable time.

A characteristic assessed on a numerical scale was transformed to the scale of "d" by the basic equation:

$$d_i = e^{-e^{0.77941[(-y_i + y_{il})/(y_{ih} - y_{il})}} \quad (4)$$

In this equation: y_i is a value of a treatment process characteristic i;
y_{ih} is the acceptable valuable of yi; and
y_{il} is the borderline value of y_i.

Table 42 shows the acceptable and borderline values of y_i for each characteristic rated.

TABLE 42. ACCEPTABLE AND BORDERLINE VALUES FOR PROCESS CHARACTERISTICS

Characteristic	Acceptable Value[a]	Borderline Value[b]
Probability of cleaning to $\leq$ 2 ppm	0.9	0.3
Probable cost of treatment $\$/m^3$	100	300
T and E effort, $/1000	300	900
Test system availability, rating	0.9	0.3
Time to provide commercial system, months	18	36

[a]d = 0.63 for these values.
[b]d = 0.37 for these values.

TABLE 43. OVERALL DESIRABILITY OF IMMEDIATE T AND E OF THE EIGHT CANDIDATE PROCESSES

	KPEG, Galson	Modar Supercritical Water	Bio-Clean	UV/Ozone-Hydrogen/ Ultrasonics Technology	CFS Extraction	B.E.S.T.	Low-Energy Extraction	In Situ Vitrification
Probability of cleaning to ≤ 2 ppm	0.9	0.8	0.8	0.8	0.8	0.8	0.9	0.9
d rating	0.63	0.59	0.63	0.59	0.59	0.59	0.63	0.63
Probable cost of treatment, $/m^3	160-191	86-136	156	90-120	153-264	133	50-57	443-483
d rating	0.54[a]	0.62	0.57	0.63	0.50	0.59	0.68	0.16
T and E effort								
$1000	216	483	166	151	123	149	170-827[b]	400
d rating	0.66	0.56	0.68	0.69	0.69	0.69	0.64	0.59
Availability of a system for a test								
future purchase by govern. required							0.8	0.8
future purchase by govern. not required	0.9	0.9	0.9	0.9	0.9	0.9		
d rating	0.63	0.63	0.63	0.63	0.63	0.63	0.59	0.59
Likely future availability of the process								
months	19.5	21.5	19	21-24	25	19	25	19-24
d rating	0.62	0.59	0.62	0.59-0.55	0.54	0.62	0.54	0.62-0.55
Overall desirability, D								
earliest future avail.	0.615	0.60	0.617	0.625	0.59	0.623	0.614	0.46
latest future avail.	0.615	0.60	0.617	0.616	0.59	0.623	0.614	0.45
average	0.615	0.60	0.617	0.621	0.59	0.623	0.614	0.46

[a]Average cost used for rating.

[b]Cost of $170,000 if developed by sponsoring firm. A cost of $280,000 was used in the evaluation to allow for the uncertainty.

(Table 43), indicating that all the processes might reasonably be expected to meet the requirement. The availability of a test system was not considered as important as the total test and evaluation cost. The time required to make a commercial process available showed a range of only six months, and was judged of lesser importance than the two major costs assessed. All ratios among the five factors that resulted from these assignments are shown below as a matrix. For example, the ratio (test system availability)/(T and E cost) is shown as the intersection of Row 4 and Column 3 as 0.2.

	Clean to 2 ppm	Cost	T & E Cost	Test System Availability	Early Commercial Availability
Clean to 2 ppm	1	0.2	0.2	1	0.8
Cost	5	1	1	5	4
T and E Cost	5	1	1	5	4
Test system availability	1	0.2	0.2	1	0.8
Early com. availability	1.25	0.25	0.25	1.25	1

From these ratios and the following tabular algorithm, the factor weights (W) were generated.

Factors	Ratios	w	Weights, W
Clean to 2 ppm	0.2000	0.20	0.0755
T and E Cost	4.000	1.00	0.3774
Future commercial proc.	1.25	0.25	0.0943
Test system availability	0.2000	0.20	0.0755
Cost	5.000	1	0.3774
		2.65	

The procedure for weight generation is as follows:

- Construct an intermediate weighting scale (the w-column) by the following procedure. Opposite that last factor enter a "1". The remaining numbers in this column are formed by the product of its predecessor and Ratio value opposite it in a sort of zigzag route up the column. For example, the first w-value, 0.20 is the product of the second w-value (1.00) and the first Ratio-value (0.2000).

- Total the w-values. This total is 2.65. Construct a column of standardized weights by dividing each element of the w-column by this total to obtain the W-column. The elements in the W-column will, perforce, total one.

d-SSYS requires s comparison between two simple lotteries for each factor rated.

Lottery 1 = 50% chance of most undesirable rating.
50% chance of most desirable rating.

Lottery 2 = X value of the rating for certain.

Using probable treatment cost as an example, RTI selected for Lottery 1:

50% chance of a treatment cost of $313/m^3$
50% change of a treatment cost of $80/m^3$

and an X value equal to the mathematical expectation of Lottery 1 for Lottery 2:

$$(0.5 \times \$313) + (0.5 \times 80) = \$196.50/m^3.$$

The value of $196.50/m^3$ on the y' scale is

$$y' = \frac{\$313 - \$196.5}{\$313 - \$80} = 0.5$$

The utility of Lottery 2 is easily determined, since it is equal to the utility of Lottery 1:

$$(0.5)(\text{utility of } \$313/m^3) + (0.5)(\text{utility of } \$80/m^3) = (0.5 \times 0.0) + (0.5 \times 1) = 0.5.$$

From Equation 8:

$$f = (\ln \text{utility})/\ln y' \qquad (9)$$

$$f = (\ln 0.5)/\ln 0.5 = 1$$

Note that if Lottery 2 had been set at a lower cost for certain, f would have been greater than 1 and the function would have been a risk-taking one, in that one would be willing to pay more for Lottery 1 in the hope of gaining a treatment cost of $80/m^3$.

The remaining utilities for each factor are then calculated using Equation 8 (Klee, 1987, p. 23).

types of materials. The UV energy must penetrate the treatment media sufficiently to reach the molecules of the hazardous compound. Filtration or cyclone-separation may be required following extraction in order to provide a suitable medium for treatment.

The Low Energy Extraction process should apply generally to any organic waste that can be dissolved into a hydrophilic solvent.

The MODAR process should apply generally to any organic waste that can be oxidized at supercritical conditions.

The CFS Extraction process has been applied to the removal and concentration of oily contaminants for which propane is the recommended solvent. Hazardous solvents and oxygenated compounds are extracted using pressurized carbon dioxide.

DeWolf, G., et al. The Cost Digest: Cost Summaries of Selected Environmental Control Technologies, EPA-600/8-84-010, U.S. Environmental Protection Agency, Research Triangle Park, NC, 1984, 92 pp.

Evans, L. Ozone in Water and Wastewater Treatment, Ann Arbor Science, Ann Arbor, Michigan (1972).

Excalibur Enterprises, Inc. Ozone/Ultraviolet/Ultrasonics, 314 W. 53rd St., New York, New York 10019, 1987.

Finkbeiner, H. L. Personal Communication, General Electric Research, Schenectedy, New York, May 14, 1987.

Folger, H. S. Recent Advances in Sonochemical Engineering, Chem. Eng. Progress Symp. Series 109, Vol. 67, 1974, Pages 1-12.

Glaze, W. H., G. R. Peyton, B. Sohm, and D. A. Meldrum, Pilot-Scale Evaluation of Photolytic Ozonation for Trihalomethane Precursor Removal, 600/52-84-136, Municipal Environmental Research Laboratory, U.S. Environmental Protection Agency, Cincinnati, Ohio, 1984.

Hackman, E. E. III. Toxic Organic Chemicals, Destruction and Waste Treatment, Noyes Data Corp., Park Ridge, New Jersey, 1978.

Harrington, E. C., Jr. "The Desirability Function, Industrial Quality Control." April 1965, pp. 494-498.

Kitchens, J. Dehalogenation of Halogenated Compounds, U.S. Patent 4,144,152, March 13, 1979.

Kitchens, J. F., G. L. Anspach, L. B. Mongoba, and E. A. Kobylinski. Cleanup of Spilled Chlorinated Organics with the LARC Process. In: Proceedings of the 1984 Hazardous Materials Spills Conference: Prevention, Behavior, Control, and Cleanup of Waste Sites, Nashville, Tennessee, April 9-12, Government Institute, Rockville, Maryland, pp. 110-115, 1984.

Klee, A. J. d-SSYS, A Computer Model for the Evaluation of Competing Alternatives, HWERL, U.S. Environmental Protection Agency, Cincinnati, Ohio, 1987.

Kornel, A. Memorandum of December 4, 1986 to Charles J. Rogers, APEG Treatment of Guam Contaminated Soil.

Levenspiel, O. Chemical Reaction Engineering, J. Wiley and Sons, New York, 1962.

Mitchell, J. K., Fundamentals of Soil Behavior, J. Wiley and Sons, Inc., New York, 1976.

Modell, M. Process for Regenerating Adsorbants with Supercritical Fluids, U.S. Patent 4,124,528, November 7, 1978.

Staszak, C. M., K. C. Malinowski, and W. R. Killilea. The Pilot-Scale Demonstration of the MODAR Oxidation Process for the Destruction of Hazardous Organic Waste Materials. Environmental Progress, 6, 1. February 1987, pp. 39-43.

Timmerman, C. L. In Situ Vitrification of PCB-Contaminated Soils, Battelle Pacific Northwest Laboratories, Electric Power Research Institute, Project RP 1263-64, Electric Power Research Institute, 3412 Hillview Ave., Palo Alto, California, October 1986.

Timmerman, C. L. Letter of July 9, 1987 to Don Wilson.

Tofflemire, T. J., and Quinn, S. O., PCB in the Upper Hudson River: Mapping and Sediment Relationships, Technical Paper No. 56, New York State Department of Environmental Conservation, April 1979.

Tose, M. K. Letter of June 24, 1987 to Donald Wilson, Review of Draft Report.

Treybal, R. E., Mass Transfer Operations, 2/c, McGraw-Hill, Inc., New York, 1968.

U.S. Congress, Office of Technology Assessment, Superfund Strategy, OTA-ITE-252, April 1985.

U.S. Department of the Interior Water and Power Resources Service Earth Manual: A Water Resources Technical Publication, 2nd edition, 1974.

U.S. Environmental Protection Agency, Guidance on Feasibility Studies Under CERCLA, EPA/540/G-85/003, U.S. Environmental Protection Agency, Cincinnati, Ohio, June 1985.

U.S. Patent 3899419, Method for Chemical Fractionation, Defalting and Dewatering of Solids and Suspensions, C. F. Emanuel, Belleville, WA. Assigned to Resources Conservation Company, August 12, 1975.

U.S. Patent 3925201, Method of Dewatering Material Containing Solid Matter and Bound and Unbound Water, R. K. Ames, Seattle, Washington. Assigned to Resources Conservation Company, December 9, 1975.

U.S. Patent 4002562, Oil Emulsion Processing, R. K. Ames and H. H. Peters, Seattle, WA. Assigned to Resources Conservation Company, January 11, 1977.

U.S. Patent 4056466, Method of Dewatering Material Containing Solid Matter and Bound and Unbound Water, H. H. Peters, Federal Highway, WA. Assigned to Resources Conservation Company, November 1, 1977.

Unterman, R., et al. Microbial Degradation of Polychlorinated Biphenyls. Proc. 10th Conf. on New Frontiers for Hazardous Waste Management, Pittsburgh, Pennsylvania, September 15-18, 1985. EPA/600-9-85-025.

TABLE A-1. HUDSON RIVER SEDIMENT CHARACTERISTICS

Sample No.	Size, mm	Weight % on Sieve	% Volatile Solids	Float-able Solids %	Total Weight of Extracted Material, ppm	Total PCB, ppm
11PCBTO1						
Dried at 60 °C	+2.0	12.0		23.8	2227	36.9
	+1.18	12.1		34.4	2958	36.1
	+0.059	32.1		12.7	862	41.1
	+0.042	15.5			94	4.85
	+0.210	19.0			550	5.75
	+0.075	7.1			1700	25.85
	-0.075	2.2			1680	35.55
Dried at 100 °C	+2.0	10.1	25.76	57.0		
	+1.18	12.1	9.33	27.5		
	+0.595	37.6	5.94	9.8		
	+0.420	17.2	1.59	0.7		
	+0.210	15.4	1.61	2.4		
	-0.210	7.0	3.58	2.5		

Note: Extractions were made with hexane acetone. Volatile solids were determined by ashing in a muffle furnace at 580 °C.

TABLE A-3. HUDSON RIVER SEDIMENTS, METAL CONCENTRATIONS AND PCB CONTENT

Sample Number	K, %	Ca, %	Ti, %	Mn, ug/g	Fe, %	Cu, ug/g	Zn, ug/g	Rb, ug/g	Sr, ug/g	PCB ug/g	Cr, ug/g	Pb, ug/g	Ni, ug/g
25	8.0	4.4	1.7	1930	6.5	120	750	130	385	240	7000	1600	60
26	8.6	5.7	2.2	1125	5.5	80	280	140	410	80-34	1540	525	60
27	8.1	4.8	1.5	950	4.5	45	200	140	390	36-66	760	400	45
29	3.9	1.8	0.6	580	2.1	10	<10	110	310	142-37	170	120	20

Analysis by X ray fluorescence

Automatic Waste Feed Cutoff System:

- Description of the automatic waste feed cutoff system when process conditions deviate beyond the safe operating limits and delay time prior to cutoff.

- Description of the procedures to shut off the waste feed line and the whole process in the event of an equipment malfunction.

Destruction System:

- Narrative description of the destruction system (e.g., description of chemical reactions, stoichiometry, reagents, catalysts, process design capacity, etc.).

- Engineering diagrams.

- List of products and by-products and their concentrations.

- Description of how essential parameters (e.g., temperature pressure, flow rate, etc.) are monitored and the design values.

- Description of reactant/oxidant/fuel/catalyst/feed rates and how they are monitored.

- Design capacity of the system.

- Detailed description of the unique engineering features of the process (e.g., high temperature, pressure, long residence time, heat transfer, etc.).

- Description of any regeneration/recycling processes applied in the process.

Pollution Control System (PCS):

- A description of the pollution control system for process effluents (air emissions, liquid effluents, sludge, solid waste, etc.)

- Design parameters.

- The important operating parameters of the PCS and how they will be monitored.

Summary of Process Operating Parameters:

Provide a summary which lists target values as well as upper and lower boundaries for all major measured operating parameters, inst ument settings, and control equipment parameters. All values must be reported in common, consistent units. The application must also describe the action to be taken whenever the parameter deviates outside the control limits These actions may include adjusting the operating conditions, stopping the PCB feed, shutting down the process, etc. The time allowable for corrective action before shut-down or other action must be specified.

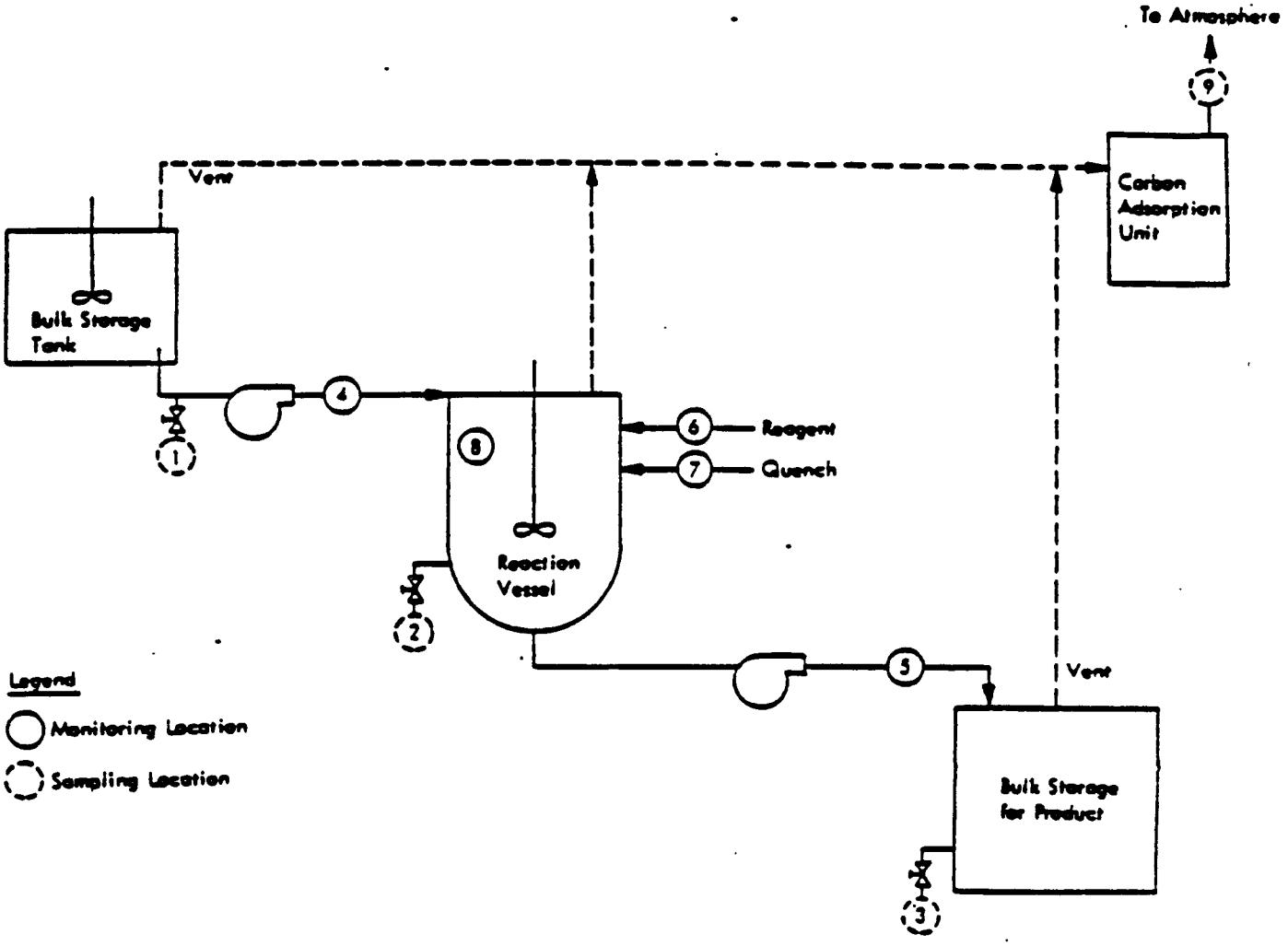

Figure A-1. Schematic of sampling and monitoring locations for a chemical dechlorination process. (Guidelines for Permit Applications and Demonstration Test Plans for PCB Disposal by Alternate Methods. U.S. EPA, Office of Toxic Substances, Contract Number 68-02-3938-6.)

- The sampling design for each unit. This may require a mathematical sampling design or simply a reference to a standard protocol. The frequency (e.g., every 15 min), size (e.g., 10 m^3), timing (e.g., any time after reaching steady-state), number of replicates (e.g., triplicates for 10% of the samples or 2 samples, whichever is greater), number of surrogate-spiked samples, and total number of samples should be listed for each sample type.

- An estimate of the sample representativeness. This may be based on data (e.g., historical data on replicates) or scientific/engineering judgment (e.g., a sample from an actively mixed feed tank could be characterized as "highly" representative).

- Contingencies for action if samples cannot be collected according to plan (e.g., alternate sites or times or an entirely new sampling plan).

Sampling Procedures:

Details of the sampling methods to be used on a routine basis should be discussed in this section. Include an explanation of the apparatus, calibration procedures, and maintenance procedures, if applicable.

When "standard methods" will be used, they may be referenced and included as an appendix. However, any deviations from standard procedures must be noted. Furthermore, when the standard method allows different procedural variations to be use, the developer must be specific as to the procedures which will be followed.

The discussion of sampling and analysis methods should include the following.

- Sampling equipment.
- Sampling equipment calibration.
- Sampling procedures.
- Sample recovery, storage, and preservation.
- Sample transport and custody.
- Analytical equipment.
- Reagents.
- Reagents preparation.
- Calibration standards.
- Calibration procedures.

Sample Analysis Procedures:

Summarize the analytical procedures (including sample preparation) which will be used for each sample. The summary should include the analytical method, apparatus, data reduction procedures, data storage, equipment calibration, and equipment maintenance. Specific details of the analytical procedures need not be included in this section, but should be referenced (if standard published procedure) or should be included as an appendix, if unpublished or if the publication is not readily available.

- Pollution control system.
- Process alarms.
- Fire extinguisher system.

5. Spill Prevention Control and Countermeasures Plan

Describe the procedures (including system design) which will be used to prevent spills of PCBs. Also describe the procedures which will be followed should a spill occur. Coast Guard regulations specifying spill prevention control and countermeasure plans (40 CFR 112.7) can be used as an example for the type of information which should be addressed; however, the plan provided in the permit application need not be in the format or detail specified in 40 CFR 112.7.

Safety Plan:

This section addresses the safety program which will be initiated to protect workers and other humans from PCB exposure or other health hazards. Identify specific items (e.g., protective clothing) of the program for ensuring safe routine operations. Procedures for preventing worker/population exposure in the case of an equipment malfunction also should be addressed; procedures for stopping waste feed, shutting down the process, and controlling emissions in the event of a malfunction should be addressed. Provisions for prevention and control of fires, explosions, electrical outages, etc., also should be addressed.

Training Plan:

Present a description of the training program which will be initiated to assure workers are trained in items appropriate to their jobs including the following.

- Number of persons to be trained and time required.
- Equipment operation (in accordance with standard operating procedures).
- Emergency shut-down procedures.
- Use of protective clothing.
- Waste handling.
- Spill prevention/control.
- Fire control.
- Hazards of PCBs.

6. Demonstration Test Plans

Briefly summarize the plans for conducting a demonstration test. Summary information which should be presented in this section include the following.

- Testing time, days.
- Tentative location for the test.
- Parameters to be tested.
- Type waste to be used.
- Earliest date test could be made.

- Preventative maintenance procedures and frequency.
- Specific routine procedures to assess accuracy, precision, and completeness.
- Procedures for corrective action.
- Quality assurance reports to management.

Standard Operating Procedures:

A summary of the standard operating procedures (SOP) should be included. The SOP should consist of the procedures available to the facility operators for use in plant operations. A process operating manual, if available, will be satisfactory.

The SOP:

- Assures that applicants have reviewed the operations in detail;

- Gives EPA opportunity to review and become familiar with the operations prior to the on-site audit; and

- May be used as a tool for training new employees, which gives some assurance that the employees have received a minimum of training.

An SOP should be a step-by-step procedure; however, details of procedures such as the use of sampling or monitoring equipment may be omitted but must be referenced. Divergence from the SOP during trials or commercial runs should be documented and significant modifications should be submitted to EPA. For convenience of use, lab procedures should be separate from system operational procedures.

The SOP should be part of the training plan. Each employee should sign and date a statement indicating that the employee has read and understood the SOP.

7. Reference

1. Tofflemire, T. J., and Quinn, S. O., PCB in the Upper Hudson River: Mapping and Sediment Relationships, Technical Paper No. 56, New York State Department of Environmental Conservation, April 1979.

U.S. Environmental Protection Agency
Region 5, Library (PL-12J)
77 West Jackson Blvd.
Chicago, IL 60604