United States
Environmental Protection
Agency

EPA-600/9-82-003
May 1982

Research and Development

EPA

Estimating Microorganism Densities in Aerosols from Spray Irrigation of Wastewater

$$C_d = QD_d e^{\lambda a_d} + B$$

Research and Development EPA-600/9-82-003

Estimating Microorganism Densities in Aerosols from Spray Irrigation of Wastewater

U.S. Environmental Protection Agency
Region V, Library (PL-12J)
77 West Jackson Boulevard, 12th Floor
Chicago, IL 60604-3590

This report was developed under contract by Life Systems, Inc. and JACA Corp. in cooperation with the Wastewater Research Program, Health Effects Research Laboratory for the Office of Research and Development.

CONTENTS

Introduction	1
Prior Studies	4
Progression of Prior Research	4
Monitoring Studies	4
The Model	8
Atmospheric Diffusion Model	8
Microbiological Dispersion Model	10
Estimating Specific Model Components	11
Site-Specific Model Inputs	11
Nonsite-Specific Model Inputs	15
Estimating Procedure	19
Model Prediction Examples	22
User Considerations	26
Perspective	27
Glossary	28
Bibliography	31

ACKNOWLEDGMENTS

This project was sponsored by the Center for Environmental Research Information (CERI), Cincinnati, OH, and was directed by Herbert R. Pahren; Douglas Williams was the Project Officer. The report was written by John P. Glennon, Life Systems, Inc., Cleveland, Ohio.

The initial technical draft of this report was prepared by David E. Camann and Donald E. Johnson, Southwest Research Institute, San Antonio, TX, with assistance from Charles A. Sorber, University of Texas at Austin, and John P. Glennon. Southwest Research Institute performed the majority of the recent field monitoring and model development efforts summarized in this report. Technical reviewers were Charles A. Sorber and Hiram Wolochow, Naval Biosciences Laboratory, Oakland, CA, and Richard Thomas and Herbert Pahren, USEPA. Photographs in the text were provided by David E. Camann and Stephen A. Schaub, U.S. Army Medical Bioengineering Research and Development Laboratory, Frederick, MD.

Comments regarding this report should be addressed to:

Mr. Herbert R. Pahren
Office of Research and Development
U.S. Environmental Protection Agency
Cincinnati, OH 45268

Single copies of this report are available from:

Center for Environmental Research Information
U.S. Environmental Protection Agency
Cincinnati, OH 45268

This report has been reviewed by the Health Effects Research Laboratory, U.S. Environmental Protection Agency, Cincinnati, OH, and approved for publication. Approval does not signify that the contents necessarily reflect the views and policies of the U.S. Environmental Protection Agency, nor does mention of trade names or commercial products constitute endorsement or recommendation for use.

INTRODUCTION

This document summarizes current knowledge about estimating the density of microorganisms in the air near wastewater management facilities, with emphasis on spray irrigation sites. One technique for modeling microorganism density in air is provided. Such information can be of use to individuals involved in decision making on public health issues associated with the siting, design, construction, and operation of wastewater management facilities. Potential users of this document include municipal officials, public health and medical professionals, wastewater facility operators, and consulting engineers. Of particular importance to these users is the aerosol density estimating procedure presented here for evaluating wastewater spray irrigation systems. This procedure permits the user to develop estimates of the density of microorganisms in air with a minimum of on-site measurements.

The predictive model described in this document provides a mechanism for developing order of magnitude estimates of microorganism aerosol densities from sources of unchlorinated or slightly chlorinated wastewater. Depending on the precision required in applications of the model, estimates can be made for distances up to 1000 meters from the aerosol source. This model may provide reasonable estimates of human exposure for use during current and future epidemiological studies at wastewater spray irrigation sites. Use of model estimates should also be valuable in making judgments as to the relative human health effect associated with alternative wastewater treatment facility designs and/or locations. Although data on the dose-response relationships (to cause human infection) are not available, estimates of microorganism densities in air can be utilized to select alternatives that represent the least human exposure, i.e., mode of land application, site configuration, and location, etc.

Persons who are experienced in atmospheric dispersion modeling will readily see that a number of simplifying assumptions have been made so that all aerosol density estimates can be performed using a standard scientific calculator. This was done to keep the estimating procedure as simple as possible without causing an unacceptable degree of inaccuracy. Improved accuracy can be achieved by using more sophisticated atmospheric dispersion modeling techniques, but will generally necessitate supplemental professional assistance to select the model appropriate for the situation and to perform the more complex calculations. Regardless of the amount of mathematical sophistication used, however, aerosol microorganism density estimates should be considered best estimates or first approximations, not infallible predictions. There are a number of microorganism-unique and site-specific factors that are still poorly understood and introduce uncertainty into all aerosol density estimates.

Need for the predictive model described in this document is based on concerns that human pathogens contained in wastewater aerosols (sprays and mists) may represent an infection risk to individuals downwind from wastewater management facilities. More than a century has passed since John Snow associated the disease cholera with the use of water from the Broad Street Pump in London, England. In 1884 Robert Koch demonstrated the causal relationship between a specific microorganism and this disease. Studies in the field of aerosol physics long ago established that mechanical agitation of a liquid (in this case, wastewater) generates sprays and mists. Through evaporation these mists become smaller droplets or particles containing the dissolved or suspended material contained within the original droplets. Those particles remain suspended in the atmosphere for considerable periods of time. For example, a particle (or droplet) of 20 μm will fall at about 1.3 cm/sec, and will travel about 1.3 km if generated at a height of 3 m into a 20 km/hr (5.6 m/sec) wind. Of particular relevance to users of this document is the survival time of aerosolized microorganisms. Laboratory and field studies have shown that the atmosphere is a harsh environment for the survival of microorganisms. Yet many microorganisms can survive (reproduce when placed back into a suitable growth medium) and, if pathogenic, retain the ability to initiate human infection following aerosolization.

Although relatively crude evaluations of wastewater aerosols, which largely dismissed the potential human health effect, were made during the 1930s, accumulated information now suggests that there are limits to which humans should be exposed to aerosols emanating from wastewater management facilities. Figure 1 identifies a number of factors that

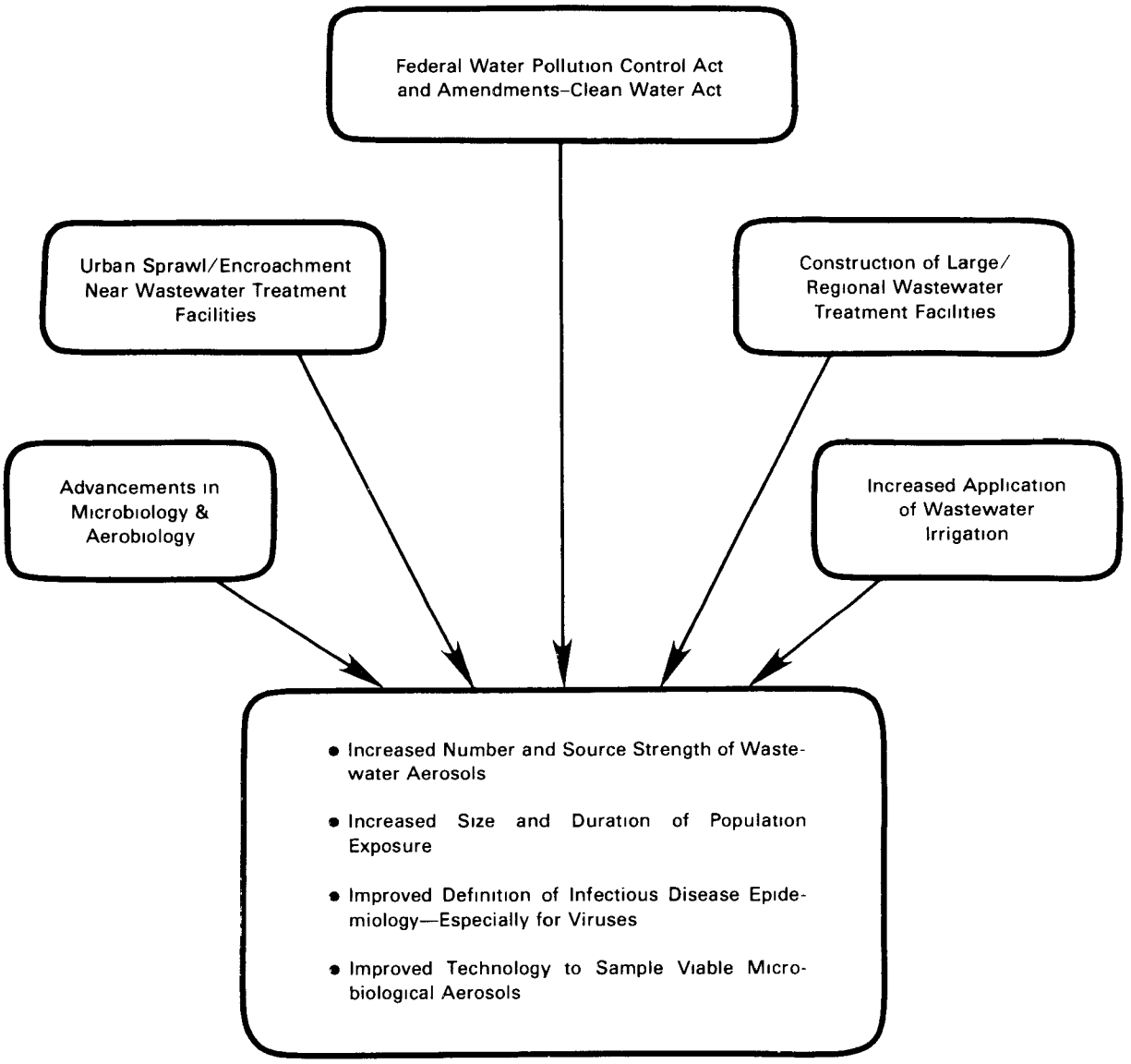

Figure 1. Basis for Recent Research Emphasis on Wastewater Aerosols

Table 1. Factors that Have Prevented a Conclusive Definition of Human Health Hazard

Factor	Explanation
Many Common Diseases with Similar Symptoms	• Human infection must be clinically confirmed to identify disease organism
	• Many cases of human disease are unreported
Common Disease Organisms	• Organisms not unique to wastewater
	• Wastewater aerosols not the only transmission route for infection
	• Difficult to distinguish aerosol-induced infections from other sources
Variable Types and Densities of Microorganism in Wastewater (Daily/Seasonal)	• Pathogenic microorganisms in wastewater will be a function of enteric disease in the population served by the wastewater treatment facility
Induced Immunity	• Potential that persons routinely exposed to low aerosol levels will be at reduced risk as a result of formation of specific pathogen antibodies (health benefit, not hazard)
Population Size	• Extremely large populations may be required to distinguish between aerosol-induced and other source-induced infections
	• Populations relatively small in vicinity of wastewater management facilities
Sensitivity of Monitoring Methods	• Available aerosol sampling technology has insufficient sensitivity to monitor low-level, potentially hazardous aerosol densities
Dose-Response Relationship	• Minimum microorganism aerosol densities that will initiate infection (especially by inhalation) are unknown for most pathogens

have led to renewed interest in evaluating wastewater aerosols. These factors include larger population densities and growing numbers of wastewater aerosol sources, both of which increase the numbers of individuals exposed. In addition, advances in the ability to measure microbiological aerosols (aerobiology), spray irrigation technology and hardware, and the epidemiology of infectious diseases (especially viruses) have contributed to this recent research emphasis.

Researchers have not detected any significant increase in the incidence of human disease attributable to microbiological aerosols from wastewater treatment or spray irrigation facilities, as they are designed and operated in the United States. These studies, however, are considered inconclusive by many who believe the potential for a significant human health effect still exists. Table 1 provides a listing of some of the factors that have hampered a conclusive evaluation. Particularly lacking are conclusive definitions of the dose-response relationships for the many pathogenic microorganisms found in wastewater. Technology to estimate the density of pathogenic microorganisms in aerosols (estimate human exposure) is prerequisite to defining the dose required to initiate human infections. Research studies have now progressed to the stage where reasonable estimates of microorganism densities in air can be made and compared to observed human infection rates. This represents a major step toward a better understanding of this hypothesized human health effect.

PRIOR STUDIES

Progression of Prior Research

A principal focus of prior microbiological aerosol research studies has been to define the dose portion of the dose-response relationship required to initiate human infections. The general progression of studies in this area is shown in Figure 2. A tremendous volume of literature has been published on the concentration and fate/survival of pathogens in wastewater. In addition, researchers have evaluated the survival of pathogens in specific wastewater treatment processes. This combined body of knowledge provides the principal basis for the disinfection that is commonly required before wastewater can be discharged to surface waters. Research studies of wastewater aerosols initially evaluated the aerosol formation/generation processes. Specific studies were undertaken to examine the degree to which spray irrigation machinery generates aerosols that will travel downwind from wastewater sources. These efforts were followed by evaluations of the atmospheric diffusion and dilution processes that are common to all airborne pollutants (particles and gases) and laboratory evaluations of the survival characteristics of specific microorganisms suspended in the atmosphere. The results of these studies were used to develop initial hypotheses of the densities of viable, infectious microorganism aerosols in the vicinity of wastewater treatment facilities, including spray irrigation sites.

More recent field monitoring studies of microbiological wastewater aerosols have been undertaken to validate and refine these initial aerosol density hypotheses. These, in turn, have led to the development of a predictive model that permits estimations of microorganism densities in air within several hundred meters of the source without extensive field monitoring. These two recent research areas deserve specific emphasis, and their results provide the basis for this document.

Monitoring Studies

Most of the information for the model described in this document was obtained during an extensive aerosol monitoring program performed at a wastewater spray irrigation site in Pleasanton, CA. Municipal wastewater at that site undergoes biological treatment, is lightly chlorinated (primarily for odor control) and is sprayed year-round onto grasslands. Additional aerosol monitoring data were collected from field studies at two other spray irrigation sites: Fort Huachuca, AZ and Deer Creek Lake, OH. Chlorinated, secondarily treated municipal wastewater is used at Fort Huachuca to irrigate a golf course. Wastewater from the recreational area at Deer Creek Lake is treated in aerated ponds, chlorinated, and then sprayed onto a 6-acre test site. Other sources of data for this document were monitoring studies of microbiological aerosols in the vicinity of two activated sludge wastewater treatment plants: the Egan Plant, Schaumburg, IL and the Durham Plant, Tigard, OR.

These aerosol monitoring efforts emphasized obtaining data for the prevalent indicator microorganisms, such as total aerobic and facultative bacteria (as determined by Standard Plate Count) and total and fecal coliforms. At the Pleasanton spray irrigation site and the two wastewater treatment plants, microbiological aerosol sampling and analyses were also conducted for specific fecal and pathogenic microorganisms. Some representative aerosol density data from those prior studies are provided in Table 2. These data are presented for purposes of illustration only and do not necessarily reflect aerosol densities that can be expected at other locations of interest to the user of this document. In addition, this table does not reflect the tremendous variability (one to two orders of magnitude) in the individual values that make up the calculated geometric means. Therefore, caution in the use of these values is strongly emphasized. Individuals interested in details are urged to refer to the original reports for these studies, which are listed in the Bibliography.

Microbiological aerosol monitoring efforts represent a significant investment of resources in terms of time, people, and money. For example, the field studies conducted at Pleasanton required an expenditure of over one half million dollars. In spite of expenditures of this magnitude, the results still suffer from significant limitations. Some of these limitations are due to the high variability in the general environment (changing wind conditions, variability in the quality of wastewater, etc.). Such variability necessitates much replicate sampling in order to obtain statistically reliable aerosol density values.

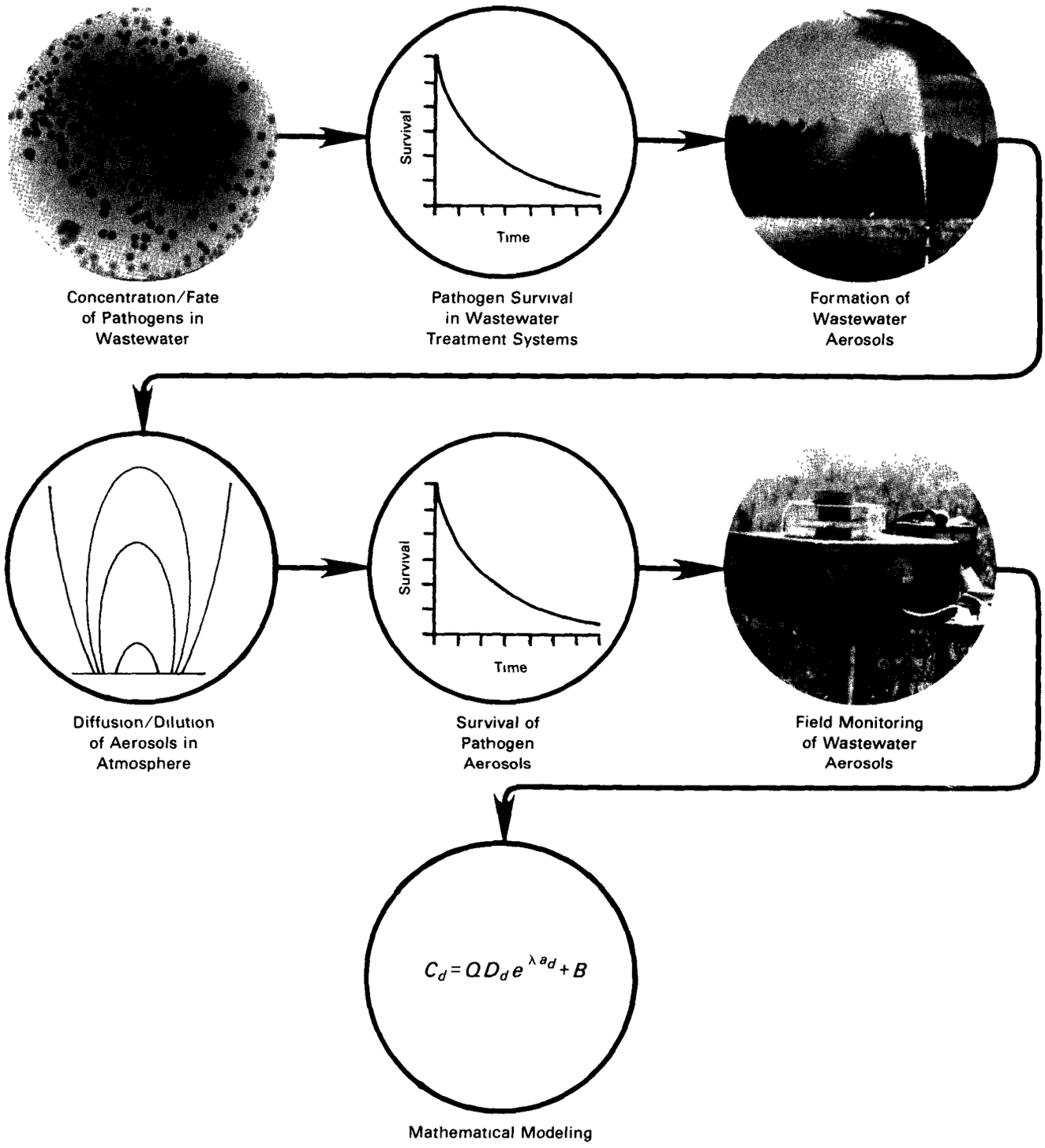

Figure 2. Progression of Prior Research

Table 2. Microorganism Densities in Air at Several Wastewater Treatment Facilities

		Geometric Mean Microorganisms/Cubic Meter[a]				
		Spray Irrigation			Aeration Basin	
Microorganism	Distance Downwind	Pleasanton	Fort Huachuca	Deer Creek Lake	Egan Plant	Durham Plant
"Standard Plate Count"						
	Upwind	970	41	89	4400	ND[b]
	10-30 m	5400	800	500	29000	ND
	31-80 m	1390	570	440	9000	ND
	81-200 m	880	130	140	7100	ND
Total Coliform						
	Upwind	0.2	1.3	0.7	1.3	<0.02[c]
	10-30 m	11.5	6.1	2.2	12.4	14.1
	31-80 m	5 0	0.7	4.8	6.9	8.2
	81-200 m	1.5	0.4	ND	3.2	1.9
Fecal Coliform						
	Upwind	0.04	ND	ND	0.2	ND
	10-30 m	2.1	ND	ND	0.7	ND
	31-80 m	1.0	ND	ND	0.5	ND
	81-200 m	0.5	ND	ND	0.3	ND
Coliphage[d]						
	Upwind	0.02	ND	ND	0 02	<0.04
	10-30 m	0.7	ND	ND	0.08	2.3
	31-80 m	0.8	ND	ND	0.04	1.1
	81-200 m	0.4	ND	ND	<0.04	0 6
Fecal Streptococci						
	Upwind	0.5	ND	ND	<2	0.06
	10-30 m	3.0	ND	ND	<2	5.0
	31-80 m	1 3	ND	ND	15	2.7
	81-200 m	0.9	ND	ND	<2	1 5
Pseudomonas						
	Upwind	6	ND	ND	<4	<4
	10-30 m	170	ND	ND	50	70
	31-80 m	100	ND	ND	<4	23
	81-200 m	55	ND	ND	4	4
Mycobacteria						
	Upwind	0.4	ND	ND	ND	<0 02
	10-30 m	ND	ND	ND	ND	28
	31-80 m	3 6	ND	ND	ND	15
	81-200 m	1.6	ND	ND	ND	5
Enterovirus[d]						
3-day assay[e]	30-50 m	0.004	ND	ND	<0.02	<0.002
5-day assay[f]	30-50 m	0.029	ND	ND	<0.02	<0.002

[a] Colony-forming units (cfu) per m³ for bacteria, plaque-forming units (pfu) per m³ for viruses
[b] ND = No data available—sampling and analysis not performed for this microorganism
[c] < = None detected in any samples, yielding the stated cumulative detection limit
[d] Virus
[e] Presumed polio virus
[f] Presumed polio plus other viruses

Other limitations are associated with the cost, convenience, and available technology for microorganism aerosol sampling. Many field aerosol samplers cannot be used for the collection of viable microorganisms. Those field samplers that do collect aerosols in an aqueous medium often lack the required sensitivity (high air flow rate/long sampling time) to provide statistically significant results. This is particularly a problem when one attempts to sample for specific pathogens (especially viruses) that occur at relatively low densities in the wastewater. The result of these difficulties is an overall limitation that prevents field monitoring from providing reliable estimates of microorganism densities in air at distances more than 100 to 200 meters from the source. This limitation has led to the conclusion that mathematical modeling is the most practical means of estimating microorganism densities in air at more distant downwind locations, where the significant exposed populations are likely to be.

THE MODEL

The need for a predictive model was recognized prior to the extensive aerosol monitoring effort conducted at Pleasanton. Therefore, that program was specifically designed to develop, refine, and verify such a model. The remaining portion of this document describes, in some detail, the results of that effort. Included are stepwise instructions whereby the user, through the collection of a limited amount of site-specific information, can make rough estimates of aerosol densities to distances up to 1000 meters downwind from wastewater spray irrigation sites without having to conduct aerosol monitoring studies.

This stepwise procedure is, however, applicable only to wastewater spray irrigation sites. Potentially, the model could be refined to provide a user-oriented estimating procedure for other aerosol sources, such as wastewater treatment aeration basins, trickling filter units, and air conditioning system evaporation condensers. At the present time, however, estimates of microorganism densities in air in the vicinity of these types of facilities would require some field aerosol monitoring.

Atmospheric Diffusion Model

The basic building block of the mathematical model for estimating microorganism densities in air is an atmospheric diffusion model. A number of such models, developed and validated over the past quarter century, are currently in wide use for estimating the downwind density of air pollutants (both inert gases and small particle aerosols). The general form of this atmospheric diffusion model is shown in Figure 3. The model assumes that pollutants will diffuse in a random manner resulting in a Gaussian (normal) distribution of pollutants at any specific downwind location. This diffusion pattern is shown in Figure 4. Pollutants released from the point source will achieve a median plume height (H) and diffuse in both the horizontal (y) and vertical (z) directions during travel along the downwind plume centerline (x). This figure correctly represents the diffusion pattern when diffusion in the downwind direction (x) can be ignored, i.e., when pollutant release is continuous, or when the duration of release is equal to or greater than the travel time to the location of interest. In this figure a receptor location is represented by the coordinate location x,-y,z which is on a straight line downwind distance (d) from the point source. It should be noted that downwind distance (d) is different from the downwind distance along the plume centerline (x). Since most aerosol density estimates are made on or near the centerline and at nominal elevations, the values for d and x are often quite close and can be used interchangeably.

$$C_d = P_d + B$$

Where:

$$P_d = D_d\, Q$$

And.

d = downwind distance, m
C_d = total air pollutant density at d, mass/m^3
P_d = air pollutant density attributable to source being modeled, mass/m^3
B = background air pollutant density, mass/m^3
D_d = atmospheric diffusion factor at d, sec/m^3
Q = pollutant source strength/emission rate, mass/sec

Figure 3. Atmospheric Diffusion Model

The atmospheric diffusion factor (D_d) in the model accounts for this downwind dispersion of pollutants. The detailed expression for this factor, applicable to pollutants emanating from a point source, is shown in Figure 5. This equation, taken from Turner's Workbook (see Bibliography) is only one of several alternative methods for describing this process mathematically. Users who desire greater accuracy in the aerosol density estimates may substitute more sophisticated expressions of D_d for this equation. Users who are not mathematically inclined should not be intimidated by this equation. Its solution is straightforward and can be performed using a basic scientific calculator.

The equation in Figure 3, as expanded by the detailed expression in Figure 5, fully describes the atmospheric dispersion model that is used as the basic building block for the microbiological dispersion model. In more sophisticated modeling efforts, adjustments to the atmospheric diffusion model are generally necessary to account for factors that interfere with the random diffusion behavior of pollutants. This includes: plume rise resulting from local meteorological conditions, gravitational settling resulting

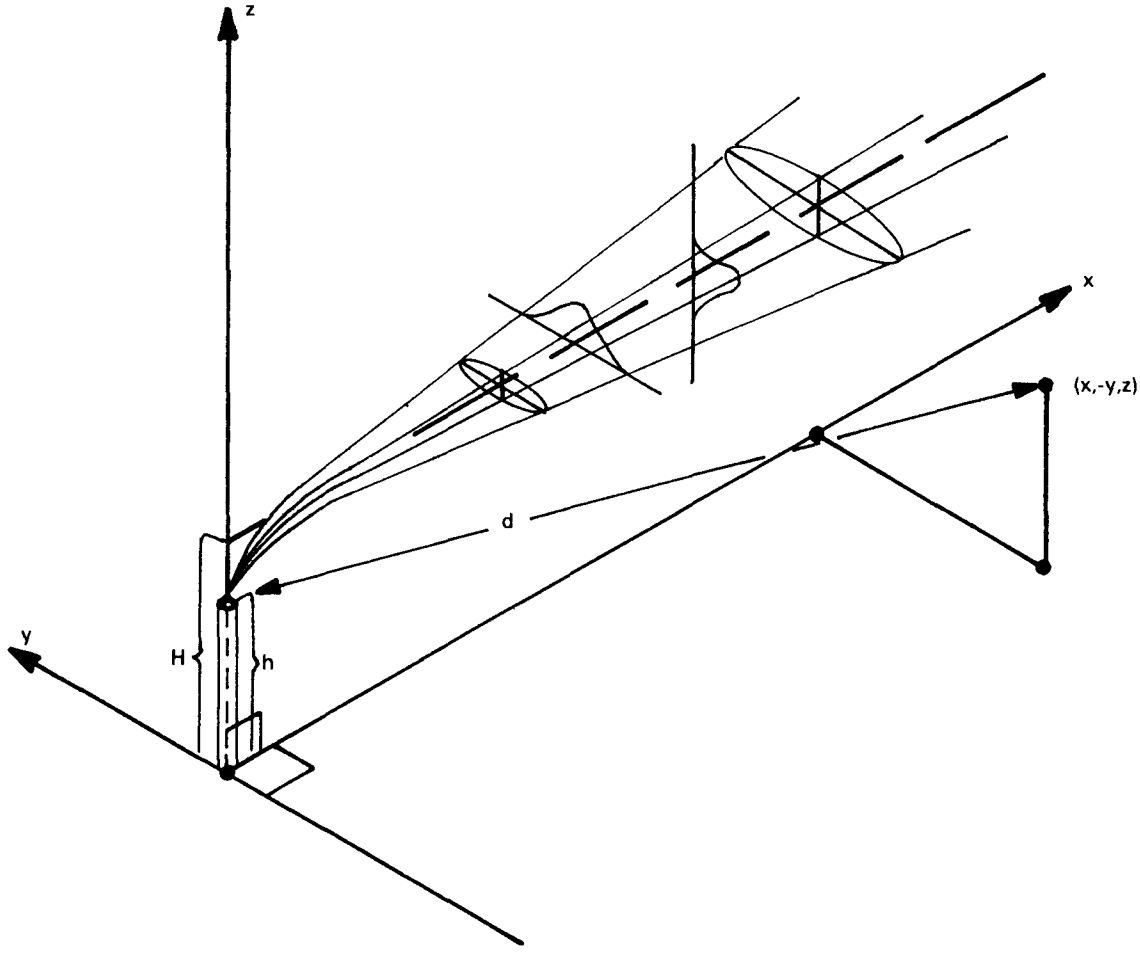

x = downwind direction along plume centerline
y = crosswind direction
z = vertical direction
(x,-y,z) = receptor location
H = mean plume height
h = source height
d = downwind distance from source to receptor

Figure 4. Gaussian Distribution of Aerosol Plume in Crosswind and Vertical Direction Downwind from a Point Source

$$D_d = \frac{1}{2\pi u \sigma_y \sigma_z} e^{-\frac{1}{2}(y/\sigma_y)^2} \left\{ e^{-\frac{1}{2}[(Z-H)/\sigma_z]^2} + e^{-\frac{1}{2}[(Z+H)/\sigma_z]^2} \right\}$$

Where:
- y = distance in crosswind direction, m
- z = distance in vertical direction, m
- u = mean wind speed, m/sec
- σ_y = standard deviation of plume concentration distribution in the crosswind direction, m
- σ_z = standard deviation of plume concentration distribution in the vertical direction, m
- H = height of plume centerline, m

Figure 5. Atmospheric Dispersion Factor

from particle size and density, pollutant decay (chemical or biological degradation) with time, reflection or "bouncing" of particles following their gravitational settling, deposition of pollutants at horizontal mixing boundaries (the ground, other surfaces, or at a temperature inversion boundary), and wash-out of pollutants by rainfall. For simplification, most of these factors are ignored in this use of the model.

For estimating pollutant density relatively close to the source, the atmospheric diffusion model should also be adjusted to account for the geometry of the pollutant source(s). This is because the close-in downwind diffusion pattern will vary significantly for pollutants that emanate from a single point, a line, or an area. At relatively distant locations all source types will resemble, and can be dealt with mathematically as, point sources. One general procedure for mathematically dealing with line and area sources is to apply the model to each point source within the line or area source. Integration of the pollutant density predictions from each point source provides the overall downwind density estimate. This and alternative procedures for more accurately dealing with multiple pollutant sources elevate the mathematics beyond the level that would be attempted by many potential users of this document. Therefore, another simplifying assumption is to treat mathematically all spray irrigation systems as point sources. The error introduced by this assumption decreases with distance downwind because the geometry of all sources will increasingly resemble that of a point source.

Microbiological Dispersion Model

The principal developmental efforts on the microbiological dispersion model have been to identify necessary adjustments to the atmospheric diffusion model. In other words, what unique factors associated with microbiological aerosols would make the use of the general atmospheric diffusion model inappropriate? It was clearly understood that microorganisms do not survive as well in the atmosphere as they do in wastewater. Therefore, a major adjustment was to incorporate factors to describe microorganism survival upon aerosolization and with aerosol age (time that the microorganism is suspended in the atmosphere).

A general expression for the microbiological dispersion model is provided in Figure 6. The only differences between this equation and the general atmospheric dispersion model (Figure 3) are: (1) the use of a source strength factor (Q_a) that is adjusted to account for loss of microorganism viability during the initial moments of aerosolization; and (2) the addition of the microorganism die-off factor (M_d) to account for reduced survival over time.

$$C_d = D_d Q_a M_d + B$$

Where:
- Q_a = aerosol source strength adjusted for loss of microorganism viability during spray process, microorganisms/sec
- M_d = microorganism die-off factor. fraction of microorganisms that remain viable at distance d from the source

Figure 6. General Form of Microbiological Dispersion Model

In its general form the microbiological dispersion model requires on-site monitoring to provide values for the source strength (Q_a) and the microorganism die-off (M_d) components. As discussed earlier, on-site microbiological aerosol monitoring is costly. Therefore, the next developmental efforts identified the mathematical components of these factors and estimated input values for these components for application at other wastewater spray irrigation system locations. The mathematical expressions for Q_a and M_d are shown in Figures 7 and 8.

The microbiological dispersion model presented in Figure 6 consists of four principal components: the

$$Q_a = W\ F\ E\ I$$

Where:

W = microorganism density in the wastewater, microorganisms/l

F = flow rate of the spray irrigation wastewater, l/sec

E = aerosolization efficiency: fraction of sprayed wastewater that becomes an aerosol, $0<E\leq1$

I = microorganism impact factor: fractional reduction of viable microorganisms below that indicated from other components of Q_a. Aggregate effect of all other factors affecting microorganism survival during the aerosol formation process, $I>0$

Figure 7. Microorganism Aerosol Source Strength for Wastewater Spray Irrigation Systems

atmospheric dispersion factor (D_d), the microorganism aerosol source strength (Q_a), the microorganism die-off factor (M_d), and the microorganism aerosol background density (B).

$$M_d = e^{\lambda a_d}$$

Where:

λ = viability decay rate of the microorganism, sec^{-1}

$a_d = \dfrac{\text{downwind distance (d), m}}{\text{wind speed (u), m/sec}}$

Figure 8. Microorganism Aerosol Die-Off Factor

Use of the complete microbiological dispersion model will provide an estimate of the total density (C_d) of viable microorganisms in the atmosphere at a downwind distance (d) from the spray irrigation system. Subtraction of background (B) from the calculation will provide an estimate of the downwind aerosol density (P_d) at distance (d) that is actually due to the spray irrigation system.

Before the model can be used, the user must select the site to be evaluated and the microorganism(s) for which aerosol density estimates will be made. These decisions will be influenced by the specific circumstances and needs of the user. The selection of specific microorganisms for consideration represents the most difficult, and potentially arbitrary, decision. The user's choices here will be constrained by the availability of microorganism-unique model inputs for which estimates have been developed. In instances where the user is making aerosol density estimates to identify the relative human exposure at several candidate spray irrigation sites, it may be advisable to select either total coliform or fecal streptococci organisms. Since these microorganisms generally occur in relatively high concentrations in wastewater, but are present only in low densities in the background air, more reliable estimates for W and B can be obtained for input to the model. Other indicator organisms or groups, such as coliphage, may be more appropriate for selection, depending on their concentration in the wastewater under study.

Estimating Specific Model Components

After choices concerning site and microorganisms have been made, the user must collect data for calculating each of the model's major components. The following sections describe ways of obtaining these model inputs. Most are site-specific, meaning that they must be obtained (measured, calculated, or estimated) for each site evaluated. Other inputs are nonsite-specific. These depend upon irrigation sprinkler characteristics and microorganism survival properties and can be applied to any wastewater spray irrigation site using impact-type rotating sprinklers. Only those model components that are relatively complex or have been derived from prior aerosol monitoring efforts are discussed in the following sections. The development of all other model inputs is explained later in this document under Estimating Procedure.

Site-Specific Model Inputs

Site-specific model inputs are greatly influenced by the design and operating conditions of the spray irrigation system and the prevailing meteorological characteristics of the site.

Meteorological Data. The only meteorological data mandatory for performing model estimates are values for wind direction, wind speed, and atmospheric stability classification. Information concerning wind direction is used to identify those areas that are generally downwind of the spray irrigation site and, therefore, of interest. Thus, wind direction influences the selection of locations where aerosol density estimates are made. Wind speed (u) is necessary to

calculate the atmospheric dispersion factor (D_d) and to calculate aerosol age (a_d), an input to the microorganism die-off factor (M_d) calculation.

Atmospheric stability is a measure of the amount of turbulence or mixing in the air. It influences the rate of diffusion as the aerosol travels downwind from the source and affects the atmospheric dispersion factor calculation. The six atmospheric stability classes (A through F) established by Pasquill (see Bibliography) are used here. Stability class A represents the most unstable, turbulent atmospheric condition while stability class F represents the most stable atmospheric condition.

All meteorological data can be obtained from local sources (historical on-site measurements or local weather station records) or selected by the user as assumptions under which the aerosol density estimate will be made. Historical meteorological data are the recommended source to ensure that aerosol density estimates are made under conditions somewhat representative of the site. Atmospheric stability information may be difficult to obtain from local sources in terms of the six stability classes. Therefore, Table 3 provides a means for selecting the most appropriate stability class. During many applications of the microbiological dispersion model, parallel calculations are made under class B and E conditions to obtain aerosol density estimates under relatively turbulent and stable conditions.

Dispersion Coefficients (σ_y and σ_z). The dispersion coefficients in the crosswind (σ_y) and vertical (σ_z) directions are the actual values used in the atmospheric dispersion factor equation to account for atmospheric stability (diffusion/dilution of aerosol downwind from the source). The amount of aerosol diffusion/dilution increases both with the distance from the source and with increased atmospheric turbulence or mixing. Figures 9 and 10 should be used to obtain values for σ_y and σ_z for each centerline distance (x) and atmospheric stability class combination under which aerosol density estimates are being made.

Microorganism Density in Wastewater (W). To obtain model input values for the microorganism density in wastewater (W), samples of the sprayed wastewater must be collected and analyzed. Separate analyses are required for each microorganism of interest to the user. As a result of high daily and seasonal variability, it is also recommended that an appropriate sampling and analysis program be conducted to provide a mean value for W. When results from a single wastewater sample are used, the aerosol density estimate will likely be less than reliable.

Flow Rate (F). The spray irrigation system total flow rate (F) is generally measured at the spray irrigation pump and is expressed in liters of wastewater sprayed per second.

Table 3. Atmospheric Stability Categories

Surface Wind Speed (at 10 m) m/sec	Day: Incoming Solar Radiation: Strong	Day: Incoming Solar Radiation: Moderate	Day: Incoming Solar Radiation: Slight	Night: Thinly Overcast or >4/8 Low Cloud	Night: ≤3/8 Cloud
<2	A	A-B	B		
2-3	A-B	B	C	E	F
3-5	B	B-C	C	D	E
5-6	C	C-D	D	D	D
>6	C	D	D	D	D

The atmospheric stability categories A to F are from most unstable to most stable. The neutral class, D, should be assumed for overcast conditions during day or night.

[a]From Turner, 1970

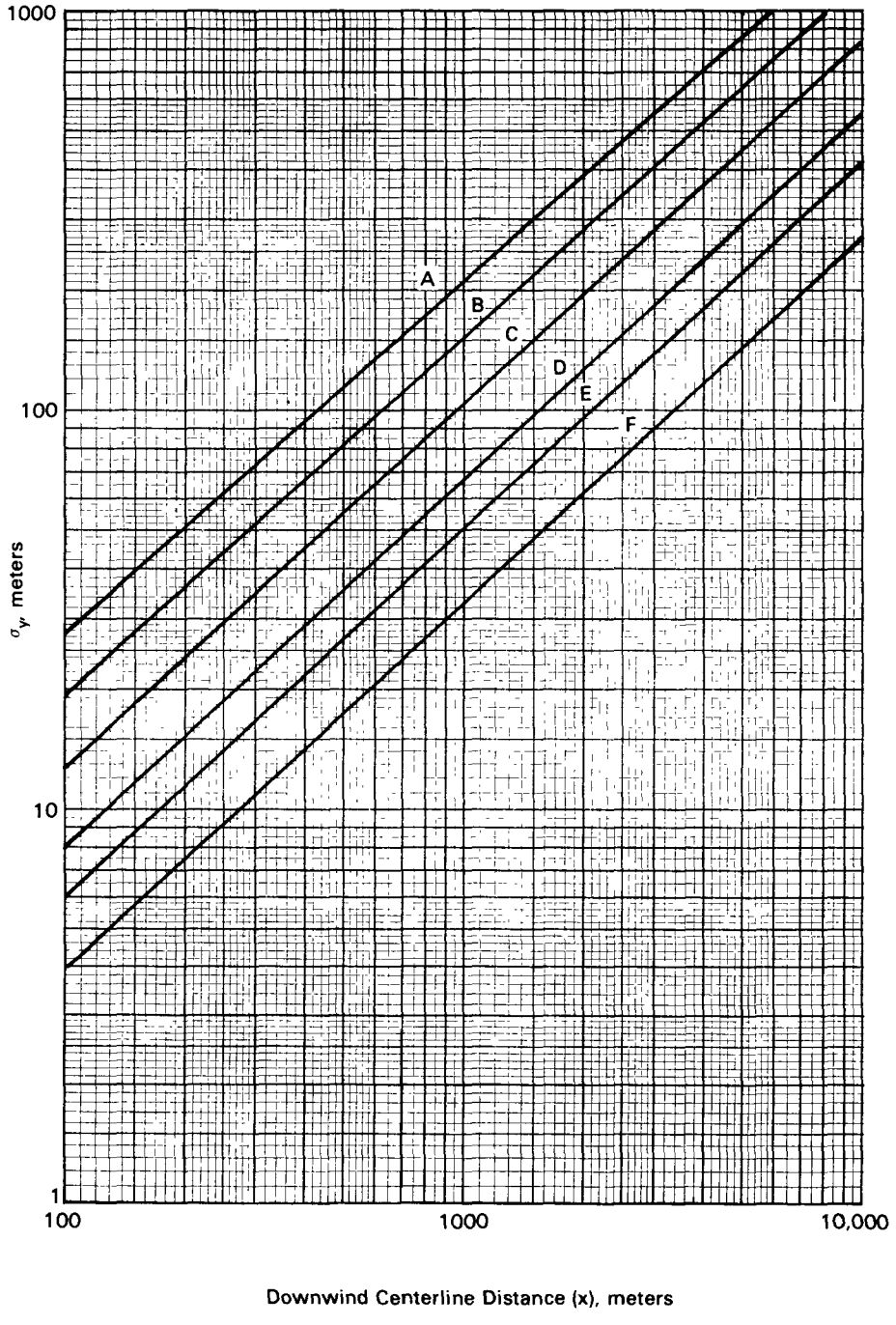

Figure 9. Horizontal Dispersion Coefficient as a Function of Downwind Distance from the Source

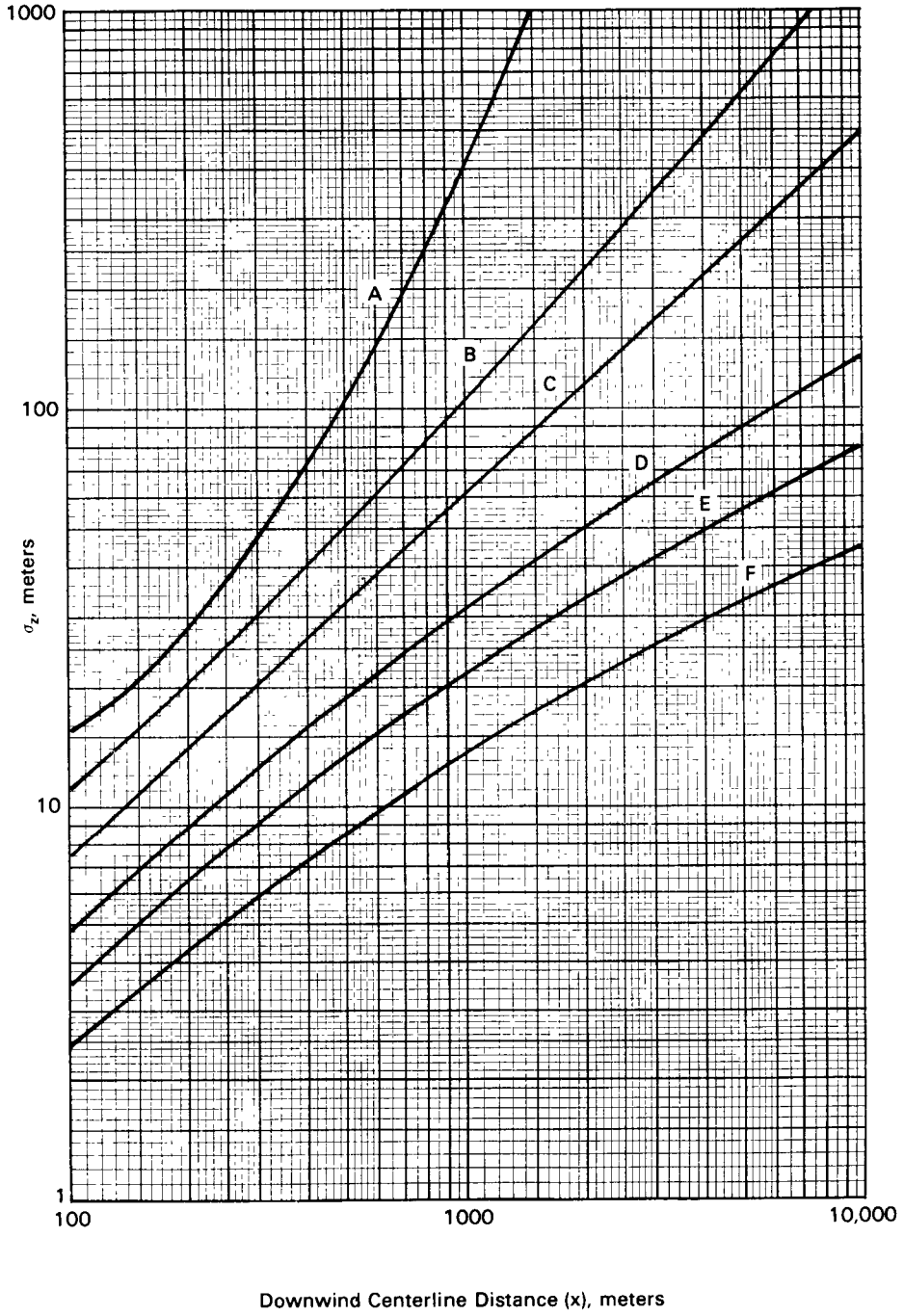

Figure 10. Vertical Dispersion Coefficient as a Function of Downwind Distance from the Source

Table 4. Background Microorganism Aerosol Densities

	Microorganisms Per Cubic Meter[a]				
	Spray Irrigation Sites			Wastewater Treatment Plants	
Microorganism	Pleasanton	Ft. Huachuca	Deer Creek Lake	Egan	Durham
"Standard Plate Count"	970	41	89	4400	ND[b]
Total Coliforms	0.2	1.3	0.7	1.3	<0.02
Fecal Coliforms	0.04	ND	ND	0.2	ND
Coliphage	0.02	ND	ND	0.02	<0.04
Fecal Streptococci	0.5	ND	ND	<2	0.06
Mycobacteria	0.4	ND	ND	ND	<0.02
Pseudomonas	6	ND	ND	<4	<4
Clostridium perfringens	0.1	ND	ND	ND	ND
Enteroviruses	—[c]	—	—	—	—

[a]Colony forming units (cfu)/m³ for bacteria, plaque forming units (pfu)/m³ for virus
[b]ND = No data available
[c]— = No data available, value presumed very low = 0 0 for model calculations

Microorganism Background (B). The background density (B) of microorganisms in air represents one of the more tenuous model input values to be estimated without performing on-site aerosol sampling. Recent field sampling has shown that for certain microorganisms (especially those not unique to wastewater) B will vary both with location and over time. One procedure for estimating the background microorganism density involves simultaneous sampling upwind and downwind of the aerosol source under known meteorological conditions. The overall background (B) is then computed as the mean of all upwind values obtained during the study period. Another procedure is to sample the air at several locations when the aerosol source has not been operated recently.

Mean background density values from prior field monitoring studies are presented in Table 4. Unfortunately, no highly reliable guide is available for selecting a value of B from this table when making microbiological dispersion model estimates. Ideally, a limited field monitoring study should be undertaken. An expedient, and less costly, procedure is to utilize the mean background values from "similar" sites (rural agricultural, urban residential, etc.) where considerable field sampling has already been performed. Alternatively, the user may wish to ignore the background component altogether and make predictive estimates only of those aerosols from the spray source (P_d) rather than of the total aerosol density ($C_d = P_d + B$). This would be the preferred procedure when the user is making relative aerosol density estimates for several candidate spray sites or when estimates are being made for wastewater-unique pathogens (B = O).

Nonsite-Specific Model Inputs

This section describes those model components that are not unique to the spray irrigation site and for which estimated values have been developed to avoid the considerable time and expense associated with on-site aerosol monitoring. These include the model inputs for aerosolization efficiency (E), microorganism impact (I), and microorganism viability decay rate (λ). Estimated values for these model inputs have been developed during prior on-site aerosol monitoring efforts, primarily at Pleasanton, CA.

Aerosolization Efficiency (E). Aerosolization efficiency (E) is the fraction of wastewater that is sprayed into the air and leaves the immediate vicinity of the spray irrigation system as aerosols. Values of E have been measured by injecting a fluorescent dye into the wastewater irrigation system and performing relatively inexpensive aerosol sampling and analyses at predetermined downwind locations.

The atmospheric diffusion model is then used to provide predictions of how much dye should be present at these downwind locations if 100 percent of the sprayed wastewater were aerosolized. The ratio between the predicted and measured dye concentrations defines the "efficiency" of the irrigation machinery

Table 5. Estimates of Aerosolization Efficiency

Spray Irrigation Site	No. of Sampling Runs Made	Percentile Distribution of E Values[a]				
		10%	25%	(Median) 50%	75%	90%
Pleasanton, CA	17	0.0009	0.0019	0.0033	0.0064	0.018
Fort Huachuca, AZ	3	—[b]	—	0.0029	—	—
Deer Creek Lake, OH	4	—	—	0.0047	—	—

[a]All values are for impact-type spray irrigation equipment
[b]— = Insufficient number of samples to provide percentile distribution

in generating aerosols. The median estimate of E from the studies conducted at Pleasanton, Fort Huachuca, and Deer Creek Lake is approximately 0.003 (i.e., 0.3 percent of the sprayed wastewater left the immediate vicinity of the spray irrigation system as aerosol droplets). Table 5 provides a probability distribution of values for E that were determined during these prior studies and can be used to select inputs for future model applications. Using the Pleasanton study data, the regression equation in Figure 11 was developed to indicate that values of E are primarily influenced by wind speed (shear forces), air temperature, and solar radiation (evaporation rate). This equation can be used as an alternative means for developing values of E when using the model. It is important to note, however, that these values of E have been developed only for rotating impact type sprinklers. A revised family of estimates for E is required where the spray irrigation system utilizes a different type of spray irrigation machinery (i.e. large rain guns, rotating wands, etc.).

$$Log_{10}\ E = 0.031t + 0.000096ur - 3.10$$

Where:

t = air temperature, °C
u = wind speed, m/sec
r = solar radiation, watts/m^2

Figure 11. Aerosolization Efficiency Prediction Equation

Microorganism Viability Decay Rate (λ). The microorganism viability decay rate (λ) defines unique survival properties for each microorganism in the aerosol state. Values for this model component have been measured by comparison of aerosol densities at several sequential downwind distances from the aerosol source. By subtracting the amount of aerosol that would be lost from the measured aerosol densities as a result of atmospheric diffusion, settling, etc. (as predicted from the atmospheric diffusion model), the remaining reduction in aerosols can be attributed to loss of microorganism viability. Microorganism viability decay rates have also been measured for various microorganisms under controlled laboratory conditions. These laboratory studies have generally provided much slower viability decay values than studies conducted in the ambient environment. This is presumably due to the effects of ambient temperature, relative humidity, solar radiation, reactive trace compounds (air pollutants) in outdoor air, and, possibly, wastewater as the pre-aerosolization medium. Therefore, the user is advised to select values for λ that have been derived from the prior field studies and presented in Table 6. Although this table presents a percentile distribution for the λ observed values, it is recommended that only values close to the median (40–60 percent) be selected. Field study measurements of these low numerical decay rates have been highly variable, thus making their accuracy at the upper and lower percentiles highly uncertain. Also, since this model component is a time-dependent factor, any errors will be magnified for aerosol density estimates made further from the source. Therefore, λ has a strong impact on the accuracy of the model predictions at distant locations from the aerosol source. The magnitude of this impact has yet to be fully defined.

No aerosolization efficiency values are included in Table 6 for enteroviruses. Because these organisms

Table 6. Estimates of Viability Decay Rate[a]

Microorganism	No. of Aerosol Sampling Runs	Percentile Distribution of λ (sec^{-1}) Values						
		10%	25%	40%	50%	60%	75%	90%
Total Coliform	44	-0.23	-0.094	-0.050	-0.032	-0.020	-0.004	—[b]
Fecal Coliform	13	-0.19	-0.070	NE[c]	-0.023	NE	—	
Coliphage	43	-0.11	-0.051	-0.029	-0.011	—	—	
Clostridium perfringens	11	-0.10	-0.039	NE	-0.004[e]	NE	—	
Standard Plate Count[d]	33	-0.12	-0.020	-0.006	-0.004[e]	—	—	
Mycobacteria	8	-0.15	-0.009[e]	—	—	—	—	
Pseudomonas	13	-0.08	-0.008[e]	—	—	—	—	
Fecal Streptococci	31	-0.06	-0.006[e]	—	—	—	—	
Enterovirus	0	—	—	—	—	—	—	

[a]All estimates based on data obtained at Pleasanton, CA
[b]— = Slow decay rate, presumed = 0.0 for model calculations
[c]NE = No estimate. Insufficient samples to make estimate at this percentile
[d]Total aerobic and facultative bacteria
[e]Questionable value, may be indistinguishable from zero

occur in extremely low densities, extensive aerosol sampling has been required to obtain quantitative data at very close downwind locations, i.e., 50 m from the aerosol source. Therefore, to provide an estimate of λ, no aerosol sampling has been attempted at locations further downwind. Laboratory studies have shown that the decay rate for enteroviruses is very slow. For model calculations it is presumed to be zero.

Microorganism Impact (I). The microorganism impact factor (I) is essentially a catch-all for all undefined processes that influence the viable microorganism source strength (Q_a) component of the model. Originally, this factor was intended to represent the initial shock (rapid water evaporation, turbulent forces, etc.) associated with the aerosolization process. Laboratory studies have shown that microorganisms consistently undergo a rapid, second-order die-off during the initial seconds of aerosolization. This is followed by a slower, first-order die-off that is represented in the model by the viability decay rate (λ). This initial shock is believed to reflect the death of that percentage of the microorganism population that is extremely fragile or unprotected and, therefore, more susceptible to the forces associated with the aerosolization process. The factor I, therefore, should represent some fractional reduction of viable microorganisms below that predicted from the other components of Q_a, i.e. density of microorganism in the wastewater (W), wastewater flow rate (F), and aerosolization efficiency (E).

During the field studies at Pleasanton, microorganism impact values greater than one were routinely observed. While such values seem to imply that some processes associated with aerosol generation or sampling might be responsible for an increase in the number of viable microorganisms, reproduction of microorganisms during the aerosolization process is not a reasonable explanation. Several plausible explanations have been postulated. Microorganisms that are contained in wastewater aggregates may be broken apart during aerosol generation or sampling. Since the microbiological assay procedure provides a count of viable particles (not the number of organisms per particle), an increased count could be obtained in the aerosol sample in spite of a significant die-off of organisms upon aerosolization. Alternatively, the density of microorganisms in the wastewater (W) may, as a result of "masking" effects during the assay procedure, be an underestimate of the actual number of organisms. Such "masking" could be due to toxic or growth inhibiting factors, such as toxic chemicals in the wastewater or microbiological competition for assay nutrient sources, that are not present in the less concentrated aerosol samples. There has been no progress to date on defining separate values for the suspected individual components of I.

Table 7 provides the percentile distribution of microorganism impact values (I) obtained for each of the microorganisms evaluated during the Pleasanton

Table 7. Estimates of Microorganism Impact[a]

Microorganism	No of Aerosol Sampling Runs	Percentile Distribution of I Values						
		10%	25%	40%	50%	60%	75%	90%
Fecal Coliforms	13	NE[b]	0.14	NE	0.27	NE	1.2	NE
Total Coliforms	44	0.034	0.13	0.27	0.34	0.48	1.2	2.3
Standard Plate Count	33	0.076	0 23	0.40	0 44	0 50	0.74	2.5
Coliphage	43	0.036	0.20	0.38	0.71	1.1	1.9	3.8
Mycobacteria	8	NE	1.6	NE	1.9	NE	4.4	NE
Clostridium perfringens	11	NE	0.50	NE	2.5	NE	14	NE
Fecal Streptococci	31	0.57	1.5	2.0	3.6	5.7	13	67
Pseudomonas	13	NE	3.6	NE	29	NE	150	NE
Enteroviruses	2	NE	NE	NE	80[c]	NE	NE	NE

[a]All estimates based on data obtained at Pleasanton, CA
[b]NE = Insufficient number of samples to provide values at all percentiles
[c]Approximate value

study. Preliminary analyses have suggested that reduced survival (low values of I) may be associated with low relative humidity, high wind speed, and a large temperature difference between the wastewater and air. Enhanced survival (higher I values) would be expected in situations of high relative humidity, low wind speed, and a minimal temperature difference between the wastewater and air. Judgments of which percentile column to use during applications of the model can be based on prevailing atmospheric conditions.

ESTIMATING PROCEDURE

Utilization of the microbiological dispersion model for estimating the density of microbiological aerosols involves five basic steps. The first calls for decisions regarding the site to be evaluated and the specific microorganism(s) of concern. The next three steps involve collection or selection of model input values to permit calculation of the atmospheric dispersion, aerosol source strength, and microorganism die-off factors. Finally, all inputs are combined and the aerosol density estimate is made for the selected downwind location. A detailed discussion of this five-step procedure follows.

1. Make initial prediction decisions.
   a. Select the site to be evaluated.
   b. Select the microorganism(s) for which an aerosol density estimate is desired.
2. Calculate the atmospheric dispersion factor.
   a. Prepare a scale drawing of the spray irrigation system and the surrounding area of interest. If the spray irrigation system is a line or area source, a central location should be marked to represent the aerosol "point source."
   b. Select the prevailing wind direction and wind speed (u) for the meteorological conditions under which the aerosol density estimate is to be made. Draw a directional line through the aerosol "point source" on the scale drawing to represent the aerosol plume centerline direction.
   c. Select and plot on the scale drawing the downwind location where the aerosol density estimate will be made. Measure or estimate the three-dimensional coordinates for the downwind location relative to ground level at the point source. This measurement includes: the plume centerline downwind distance (x), the crosswind deviation from the plume centerline (y), and the elevation above ground level at which the estimate is to be made (z). The downwind centerline distance (x) should not be confused conceptually with the downwind distance to the location (d). The value for d is the distance aerosol will travel in a straight line from the elevated point source to the location where the estimate is to be made. In most model applications the values for x and d are nearly equivalent, especially when a location on the plume centerline is selected. In such cases y is zero. To represent the breathing zone for persons standing downwind, 1.5 m is commonly used for z.
   d. Estimate the median aerosol plume height (H) for the point source. For rotating impact sprinklers, the elevation of the sprinkler head (h in Figure 4) is commonly used for this value. Precise values for H and z are not necessary because the atmospheric dispersion model is not sensitive to moderate deviations in these values.
   e. Using Table 3 and/or local meteorological data, select the atmospheric stability class, A through F, that represents the meteorological conditions under which the estimate is to be made. Alternatively, the neutral class, D, can be assumed. Parallel calculations using class B and E are commonly performed to provide comparative aerosol density estimates under "stable" and "unstable" atmospheric conditions.
   f. By consulting Figures 9 and 10, determine the crosswind and vertical dispersion coefficients (σ_y and σ_z respectively) by using the value for x and atmospheric stability established in steps 2c and 2e above.
   g. Calculate the atmospheric dispersion factor using the equation:

$$D_d = \frac{1}{2\pi u \sigma_y \sigma_z} e^{-\frac{1}{2}(y/\sigma_y)^2} \left\{ e^{-\frac{1}{2}[(Z-H)/\sigma_z]^2} + e^{-\frac{1}{2}[(Z+H)/\sigma_z]^2} \right\}$$

3. Calculate aerosol source strength.
   a. Initiate a wastewater sampling program to develop mean wastewater density values (W) for the selected microorganisms. Microorganisms that can be easily monitored in wastewater and for which reliable estimates of I and λ have been derived are not, however, the pathogenic microorganisms of epidemiological concern. Therefore, aerosol density estimates will generally be made for nonpathogenic organisms and assumptions made regarding the association between these density estimates and those for the pathogens of actual concern.

b. Measure or calculate the total flow rate (F) of wastewater in the spray irrigation system. This is the total flow rate to all sprinklers contributing to the aerosol source and is usually measured at the irrigation system pump.
c. Select an aerosolization efficiency (E) value appropriate to the type of spray system being evaluated. This will involve selection of a value for E from Table 5 or calculation of a value using the equation in Figure 11.
d. Select an appropriate value for the microorganism impact factor (I) for each microorganism for which an aerosol density estimate is to be made. These values should be selected from the percentile table presented in Table 7. Median percentile values (50 percent) should be selected to represent average meteorological conditions. Lower percentile values (25 percent) should be selected for aerosol density estimates made under conditions, such as high solar radiation, high ambient temperature, or low to medium relative humidity, that adversely affect microorganism survival. An example of this condition would be a very hot, dry summer day. Selection of values of I from the higher percentile range (75 percent) should be made under those environmental conditions deemed favorable for the survival of microorganisms, such as little or no solar radiation, low ambient temperature, or high relative humidity. An example of this condition would be a cool, humid night.
e. Calculate aerosol source strength using the equation:

$$Q_a = WFEI.$$

4. Calculate the microorganism die-off factor.
   a. Make a line on the scale drawing that connects the aerosol "point source" to the downwind location where the estimate is to be made. Calculate or estimate the downwind distance (d). When z and H are similar, d can be measured on the two-dimensional drawing. When the location is also on or near the plume centerline (i.e., $y \cong 0$), the value for x can be used for d.
   b. Using downwind distance (d) and wind speed (u) in the following equation, calculate the aerosol age (a_d) of the downwind location where the aerosol density estimate is to be made:

$$a_d = d/u.$$

   c. Select values for the viability decay rate (λ) for each microorganism for which an aerosol density estimate is to be made. Values for this model component should be selected from the percentile table provided in Table 6. Median values should be selected for relatively moderate meteorological conditions. Low percentile values (40 percent) should be selected for environmental conditions that are adverse to microorganism survival, and higher percentile values (60 percent) should be chosen for environmental conditions favorable for microorganism survival.
   d. Calculate the microorganism die-off factor (M_d) applicable to the downwind location from the viability decay rate (λ) and aerosol age (a_d) with the equation:

$$M_d = e^{\lambda a_d}$$

5. Calculate downwind microorganism aerosol density estimates
   a. Using the following equation, calculate the microorganism aerosol density (P_d) at the downwind location that is attributable to the spray irrigation source:

$$P_d = D_d Q_a M_d.$$

   b. Estimate, when desired, the background microorganism aerosol density (B) for the microorganism. Table 4 provides values for B from prior studies. The user should note, however, that selection of a value from this table for a microorganism that is not generally unique to wastewater may result in an unreliable density estimate.

c. If background aerosol density is being considered, calculate the total microorganism aerosol density at the location downwind from the spray irrigation system with the equation:

$$C_d = P_d + B.$$

MODEL PREDICTION EXAMPLES

To demonstrate this procedure and to provide insight into the accuracy and precision of the model, several estimates of microbiological aerosol densities have been calculated for specific cases at both the Pleasanton and Deer Creek Lake spray irrigation sites. Table 8 provides a detailed summary of the predictions made for total coliforms and fecal streptococci in the vicinity of the Pleasanton spray irrigation site. The closest exposure population is in a subdivision located approximately 770 m from the center ("point source") of the aerosol source. The case considered in this example was for a typical summer night, corresponding, perhaps, to a maximum, worst case exposure situation. Following the five step procedure, the total aerosol density values (C_d) for total coliform and fecal streptococci were 0.3 and 29.5 cfu/m^3, respectively. Potential users should note that the predicted aerosol density for total coliforms entering the residential area from the spray field source (P_d) is only one half the background value (B). Therefore, the total esti-

Table 8. Example Calculation Using the Microbiological Dispersion Model: Pleasanton, CA Residential Area "Worst Case" (Summer Night)

Procedure Step	Value	
1. Initial Decisions		
a. Site	Pleasanton, CA	
b. Microorganisms of Interest	Total Coliform and Fecal Streptococci	
2. Atmospheric Dispersion Factor		
a. Scale Drawing	See Figure 12	
b Wind Data		
Direction	East	
Speed, u	2 m/sec	
c. Downwind Location		
Centerline Distance, x	770 m	
Crosswind Deviation, y	0 m	
Height, z	1.5 m	
d. Aerosol Plume Height, H (equal to sprinkler height)	0.6 m	
e Atmospheric Stability Class	E (stable)	
f. Dispersion Coefficients		
Crosswind, σ_y	40	
Vertical, σ_z	18	
g. Atmospheric Dispersion Factor, D_d	2.2×10^{-4} sec/m^3	
3 Aerosol Source Strength	Total Coliform	Fecal Streptococci
a Microorganism Density in Wastewater, W	1.0×10^7 cfu/l	1.0×10^5 cfu/l
b. Total Wastewater Flow Rate to Irrigation System, F	70 l/sec	70 l/sec
c Wastewater Aerosolization Efficiency, E	3.3×10^{-3}[a]	3.3×10^{-3}[a]
d. Microorganism Impact Factor, I	0.48	5.7
e. Aerosol Source Strength, Q_a	1.1×10^6 cfu/sec	1.3×10^5 cfu/sec
4. Microorganism Die-off Factor		
a Downwind Distance to Location, d (Y = 0, d ≅ x)	770 m	770 m
b. Aerosol Age, a_d	385 sec	385 sec
c Viability Decay Rate, λ	-0.02 sec^{-1}[b]	0.0 sec^{-1}[c]
d. Microorganism Die-off Factor, M_d	4.53×10^{-4}	1
5 Downwind Microorganism Aerosol Density Estimates		
a. Microorganism Aerosol Density resulting from Spray Irrigation Source, P_d	0.1 cfu/m^3	29.0 cfu/m^3
b. Background Aerosol Density, B	0.2 cfu/m^3	0.5 cfu/m^3
c Total Microorganism Aerosol Density, C_d	0.3 cfu/m^3	29.5 cfu/m^3

[a] 50th percentile value selected
[b] 60th percentile value selected
[c] Slow decay rate, presumed = 0.0 for model calculations

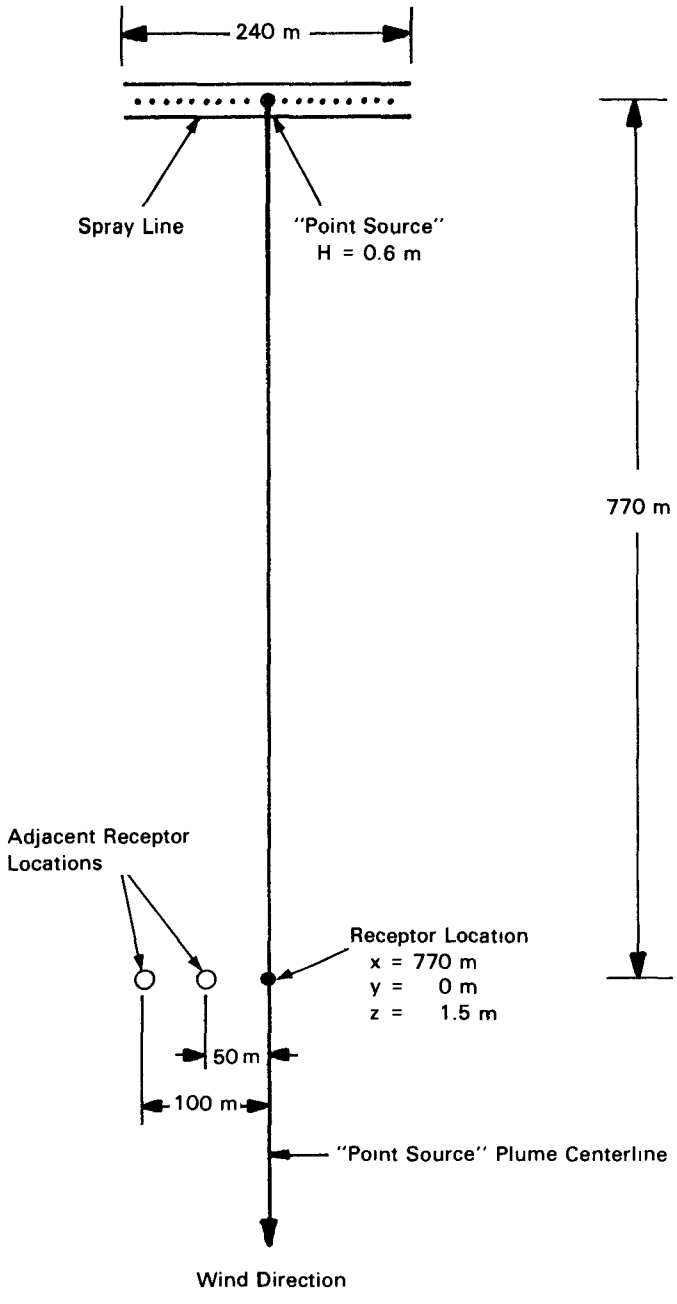

Figure 12. Diagram of Pleasanton, CA Prediction Example

Table 9. Major Model Inputs for Sample Predictions for Total Coliforms

Site Condition	Pleasanton		Deer Creek Lake	
	Summer Night	Summer Midday	Summer Night	Summer Midday
Atmospheric Diffusion Factor (D_d)				
• Wind Speed (u), m/sec	2	4	2	4
• Centerline Distance (x), m	770	770	700	700
• Atmospheric Stability Class	E (Stable)	B (unstable)	E (stable)	B (unstable)
• Dispersion Coefficients				
Crosswind (σ_y)	40	125	36	112
Vertical (σ_z)	18	83	16.5	72
Aerosol Source Strength (Q_a)				
• Total Coliform Density in Wastewater (W), cfu/l	1.0×10^7	1.0×10^7	1.8×10^5	1.8×10^5
• Wastewater Flow Rate (F), l/sec	70	70	30	30
• Aerosolization Efficiency (E)	3.3×10^{-3}	1.6×10^{-2}	4.7×10^{-3}	9.0×10^{-3}
• Microorganism Impact Factor (I)	0.48	0.27	0.48	0.27
Microorganism Die-off Factor (M_d)				
• Downwind Distance (d), m	770	770	700	700
• Aerosol Age (a_d), sec	385	193	350	175
• Viability Decay Rate (λ)	-0.02	-0.05	-0.02	-0.05

mated density (C_d) for this microorganism reflects the significant influence of that background value.

Of greatest importance in this parallel sample calculation is a demonstration of the impact that microorganism survival factors have on downwind aerosol densities. Fecal streptococci are relatively hardy microorganisms in the aerosol state. Although their density in wastewater is two orders of magnitude below the coliforms, their aerosol density 770 m downwind is predicted to be nearly two orders of magnitude greater than the coliforms. The enhanced survival properties (higher I value and lower λ value) account for a four-log difference in the relative wastewater density measurements and downwind aerosol density estimates. Thus, pathogens that exist in relatively low densities in wastewater and have hardy survival properties can be expected to occur in relatively high densities at locations distant from the aerosol source.

A second aerosol density estimate was made at this same location for a typical summer midday case, perhaps corresponding to a minimum, best case exposure situation. In addition, model predictions were made for residents of a campsite located 700 m downwind from the Deer Creek Lake spray irrigation facility. These sample calculations were performed only for total coliforms. The major model inputs for all of these example calculations are summarized in Table 9. All model inputs absent from this table are the same as for the detailed example (Table 8). The summary of these calculations, presented in Table 10, shows that the midday predictions were approximately two orders of magnitude below the nighttime situations. Reduced microorganism survival (from higher temperature, presence of solar radiation, or lower relative humidity) and greater atmospheric diffusion/dilution (from unstable, highly mixed air) more than compensated for the shorter aerosol age (from greater wind speed), and higher aerosolization efficiency (from higher temperature, solar radiation, and wind speed) present at midday.

Although these estimates are for sites where aerosol field monitoring has been conducted previously, they are all for downwind distances beyond the sensitivity limits of practical aerosol monitoring programs (100–200 m), and thus represent another important application of the microbiological dispersion model. Even when the user undertakes a major wastewater aerosol sampling program, model estimates are still required to predict human exposures at downwind locations beyond the range of reliable sampling.

A final example aerosol density estimate is presented to demonstrate the significant impact of the crosswind diffusion coefficient (σ_y) in the model. The

Table 10. Summary of Example Predictions for Total Coliforms

Model Component	Pleasanton		Deer Creek Lake	
	Summer Night	Summer Midday	Summer Night	Summer Midday
Atmospheric Diffusion Factor (D_d), sec/m^3	2.2×10^{-4}	7.7×10^{-6}	2.7×10^{-4}	9.9×10^{-6}
Aerosol Source Strength (Q_a), cfu/sec	1.1×10^{6}	3.0×10^{6}	1.2×10^{4}	1.3×10^{4}
Microorganism Die-off Factor (M_d)	4.5×10^{-4}	6.4×10^{-5}	9.1×10^{-4}	1.6×10^{-4}
Microorganism Density at Distance (d_3) attributable to Source (P_d), cfu/m^3	0 1	4.4×10^{-3}	2.9×10^{-3}	2.1×10^{-5}

detailed example calculation summarized in Table 8 is for a location 770 m downwind on the aerosol plume centerline, i.e. y = O and under stable (class E) atmospheric conditions. Table 11 compares the results of this and two similar calculations where the receptor location is 50 and 100 m away (crosswind) from the plume centerline. Using these values for y has a major impact on the calculated atmospheric diffusion factor. Because the aerosol travel distance (d) also increases slightly, the microorganism die-off factor is slightly altered. Thus, major reductions in the downwind aerosol density are predicted at not too distant locations adjacent to the plume centerline. This predicted reduction at adjacent downwind locations should be less pronounced under more unstable atmospheric conditions (i.e., class B), when greater mixing and diffusion of the aerosol plume will take place.

Table 11. Impact of Crosswind Location

Model Component	Crosswind Distance, y		
	0 m	50 m	100 m
Atmospheric Dispersion (D_d), sec/m^3	$2\ 2 \times 10^{-4}$	$1\ 0 \times 10^{-4}$	9.7×10^{-6}
Aerosol Source Strength (Q_a), cfu/sec	1.1×10^{6}	1.1×10^{6}	1.1×10^{6}
Microorganism Die-off Factor (M_d)	$4\ 5 \times 10^{-4}$	$4\ 4 \times 10^{-4}$	$4\ 3 \times 10^{-4}$
Total Coliform Aerosol Density at x = 770 m attributable to the source (P_d), cfu/m^3	10.0×10^{-2}	$4\ 8 \times 10^{-2}$	0.46×10^{-2}

USER CONSIDERATIONS

Users of this model are cautioned that treating all spray irrigation systems mathematically as point sources generates a significant error in the absolute and relative magnitude of both centerline and adjacent downwind aerosol density estimates. For spray irrigation systems that are line or area sources, the centerline aerosol density estimate will be higher when the point source model, rather than a more sophisticated model, is used to account for source geometry. The adjacent location aerosol density estimates will be low when the point source model is used because, in reality, aerosol is being generated along a line upwind from the receptor location. Therefore, estimates of aerosol densities at locations adjacent to the centerline should be restriced to locations beyond the lateral dimensions of the actual spray system. No attempt has been made to provide a quantitative estimate of the magnitude of this source of error because it is variable and increases dramatically for locations closer to the aerosol source, when source geometry becomes increasingly important.

Users are also cautioned that another potential source of significant error in application of the model occurs in the microorganism viability decay rate (λ). The values for this model input in Table 6 have been derived from aerosol sampling studies performed within 100–200 m from the aerosol source. Owing to the time (distance) dependence and exponential nature of microorganism die-off component, any inaccuracies in the λ values will be magnified as distance from the source increases. Thus, users are advised to restrict downwind aerosol density estimates to within approximately 1000 m from the spray irrigation system.

PERSPECTIVE

In studies to date, no significant increase of human infection or disease resulting from microbial aerosols generated by wastewater treatment or spray irrigation facilities has been observed in populations living nearby. There are several reasons for such results:

- Densities of specific pathogens in the wastewater were low, and were reduced rapidly with time and distance from the source.
- A person would ordinarily inhale very few organisms unless exposed for many hours.
- The exposure levels were below the minimum infective dose.
- Microorganisms in wastewater were primarily enteric organisms, whereas the route of exposure was respiratory.
- Phagocytic cells tended to respond to the foreign substances inhaled before antibody cells were formed.
- Exposed persons were probably in good health and better able to combat infection than sickly persons would be.
- Infectious agents other than those checked may have caused an undetected infection.

While our knowledge of wastewater aerosols has increased significantly during the past few years, it should always be kept in mind that despite the lack of a relationship between aerosols and disease, sewage contains potentially pathogenic agents and exposure should be kept to a minimum. Aerosol generation should be minimized, and nearby populations should not be indiscriminately exposed.

GLOSSARY

Aerobiology — The portion of aerosol science that investigates aerosols containing microorganisms.

Aerosol — Any material, solid or liquid, of a size that remains suspended in air for an appreciable length of time before settling. Typical size range is 0.01 to 20 μm (1 μm = 3.94×10^{-5} inches).

Atmospheric Stability Classification — A method of reducing a number of complex atmospheric motion phenomena into classes useful in designing and using the "Model."

cfu — Colony-forming units. An expression derived from the method of quantitating bacteria, yeasts, and molds by their growth on a nutrient agar medium (see Standard Plate Count). Each colony that is seen and counted originates from a single cell, or a collection of cells, deposited at one place on the medium.

Coliform — A type of bacterium closely resembling other species found in the intestinal tract of animals, including man. From "colon," hence "coli-."

Coliform, fecal — Coliform bacteria that have a demonstrably high probability of having come from human fecal material. (See also Streptococcus, fecal.)

Coliphage — A virus that invades and kills coliform bacteria. There are numerous coliphages, distinguishable from each other by special tests.

Decay rate — Most airborne microorganisms "disappear" (in terms of viability) from the air faster than would be indicated by their fall-out through gravitational settling. This disappearance is a result of some lethal event endured by the microbe as a consequence of being airborne. Expressed as percent decrease over time (minutes or seconds).

Density — The number or weight of a substance (of particulate or molecular dimensions) present in a unit volume (or weight) of diluting material, e.g.,

$$\frac{\text{Number of bacterial cells}}{\text{m}^3 \text{ of air}} \quad \text{or} \quad \frac{\text{number of virus particles}}{\text{ml of wastewater}}$$

Diffusion — The random motion of molecules and small particles resulting from unequal "push and shove" of molecular motion, the strength of which is a function of temperature. The diffusion process tends to cause local densities of a gas or small particle aerosol to decrease over time.

Disinfection — Any physical or chemical method that reduces the number of living microorganisms present in a given location.

Dose — The total number of infectious disease units (bacteria, mold cells, virus particles) or weight of toxic chemicals that an individual absorbs, ingests, or inhales.

Dose-response — The relationship between dose and the effect a dose has on the individual receiving it.

Epidemiology — The branch of science that seeks to establish relationships between cause and effect by examining pertinent records of large numbers of affected individuals.

Enterovirus A descriptive name for a large number of viruses that can cause diseases with intestinal symptoms. These viruses are shed in the feces.

Immunity Natural or induced resistance of an individual to a known pathogenic microorganism. Immunity is usually not absolute. A large enough dose of the pathogen may overcome immunity.

Impact factor The loss of microorganisms taking place during the process of aerosol generation, thought by some to be a reflection of the large shear forces generated in efficient sprayer operation.

Microorganism A member of the class of living entities that is small in size, in which the reproductive and living unit is composed of one cellular element. Included in this class are bacteria, yeasts, molds, and viruses.

Model A formal description of the outcome of a series of events, all of which may be expressed in some mathematically valid form. To be of use, a model must be demonstrably valid; it must predict, within known limits, a previously established or known outcome.

Monitoring The process of assessing the quality of wastewater or air. Those components that are to be quantitatively determined must be specified.

Mycobacteria From the genus name *Mycobacterium,* the most famous of which is *Mycobacterium tuberculosis.* Most mycobacteria are harmless saprophytes, some of which are part of the fecal flora.

pfu Plaque-forming unit is the "cfu" concept applied to a virus that is able to form defined plaques (or regions of cell destruction) when it grows in a cell (either plant, animal, or microbial) and, on rupture of the infected cell, spreads progressively to other cells until the area of cellular damage is large enough to be seen.

Plate, petri A shallow vessel, flat-bottomed glass or plastic, ca. 100 mm in diameter, into which a sterile nutrient growth (e.g., Standard Plate Count agar) medium is poured.

Pollutant Any substance that constitutes a threat to human, animal, or plant health or welfare. A pollutant may be a solid, liquid, or gas.

Pseudomonas The genus name of a large number of species. Some of the pseudomonads are serious disease agents. Most are harmless, including those present in animal feces.

Sampler, air A device that removes, by quantitative means, those materials to be monitored and subsequently assessed quantitatively. The results obtained by sampling microorganisms in air must be interpreted with caution, since the very acts of sampling, of transporting the sample, and of assessing the kinds and numbers of microorganisms are fraught with varying degrees of uncertainty.

Sampler, water A device to remove a representative portion of the water stream to be monitored.

Standard Plate Count An assessment of the number of microbes (bacteria, yeasts, or molds) that can grow on a sterile, jelly-like nutrient surface from single cells to an aggregate of

cells sufficient in number to be visible to the minimally assisted eye. The nutrient medium made from a recipe widely adopted by sanitation specialists is termed Standard Plate Count agar.

Streptococcus — A genus of bacteria commonly found in the mouth and intestines of man and other animals. Some of the members of this genus are pathogens.

Streptococcus, fecal — A species of *Streptococcus* that is a normal inhabitant of human (and other animal) fecal microbial flora.

Source strength — The effective number of particles that can be rendered airborne and be subject to wind transport and diffusion. Source strength depends on the quantitative and qualitative nature of the wastewater being sprayed, by the mechanical nature of of the spray head, hydraulic pressure, and other environmental factors.

Sterilization — A disinfection process that kills all living microorganisms.

Treatment, primary — Treatment of wastewater to remove or reduce gross particulate material and a portion of the dissolved organic material.

Treatment, secondary — Treatment of effluent from a primary treatment facility that reduces, through chemical-biological action, the organic constituents of that effluent to a level acceptable for discharge into a receiving body of water.

Virus — A form of life that grows and reproduces only in a living cell of a bacterium, a higher plant, or animal. Such growth and reproduction frequently kills the host cell. Numerous types of viruses exist.

Wastewater — Water that has been used for domestic, sanitary, or industrial purposes but no longer can be used for those purposes.

Wastewater Management Facility — An assembly of equipment and structures arranged to permit raising the quality of wastewater by removing (or reducing concentrations of) undesirable dissolved or suspended material. Includes a variety of wastewater land application systems (spray irrigation being a popular design) often erroneously referred to as wastewater disposal.

BIBLIOGRAPHY

Literature Publications and Books

Benbough, J.E., and A.M. Hood. 1971. Viricidal activity of open air. J. Hyg. 69:619–626.

Cramer, H.E. 1959. Engineering estimates of atmospheric dispersal capacity. Amer. Ind. Hyg. Assoc. J. 20(3):183–189.

Dimmick, R.L., and A.B. Akers, eds. 1969. An Introduction To Experimental Aerobiology. Wiley-Interscience, New York.

Gifford, F.A. 1961. Uses of routine meteorological observations for estimating atmospheric dispersion. Nuclear Safety 2(4):47–51.

Guzewich, D.C., and W.J.B. Pringle. 1977. Validation of the EPA-PTMTP short-term Gaussian dispersion model. J. Air Poll. Control Assoc. 27:540.

Harper, G.J. 1961. Airborne microorganisms: survival test with four viruses. J. Hyg. 59:479–486.

Harper, G.J. 1963. The influence of environment on the survival of airborne virus particles in the laboratory. Archiv. für Die Gesamte Virusforschung 13:64–71.

Hay, J.S., and F. Pasquill. 1957. Diffusion from a fixed source at a height of a few hundred feet in the atmosphere. J. Fluid Mech. 2:299–310.

Hay, J.S., and F. Pasquill. 1959. Diffusion from a continuous source in relation to the spectrum and scale of turbulence. Pages 345–365 in F.N. Frenkiel and P.A. Sheppard, eds. Atmospheric Diffusion and Air Pollution, Advances in Geophysics. Academic Press, New York.

Katzenelson, E., I. Buium, and H.I. Shuval. 1976. Risk of communicable disease infection associated with wastewater irrigation in agricultural settlements. Science 194:944–946.

Kethley, T.W., E.L. Fincher, and E.B Cown. 1957. The effect of sampling method upon the apparent response of airborne bacteria to temperature and relative humidity. J. Infect. Diseases 100:97–102.

Moore, B.E., C.A. Sorber, and B.P. Sagik. 1979. A procedure for the recovery of airborne human enteric viruses during spray irrigation of treated wastewater. Appl. Environ. Microbiol. 38:688–693.

Pasquill, F. 1961. The estimation of the dispersion of windborne material. Meteorol. Mag. 90(1063):33–49.

Raynor, G.S., and J.V. Hayes. 1976. Aerosol production by irrigation equipment used for land application of wastewater. Amer. Ind. Hyg. Assoc. J. 37:526–536.

Sorber, C.A., and K.J. Guter. 1975. Health and hygiene aspects of spray irrigation. Amer. Pub. Health 65:47–52.

Sorber, C.A., and B.P. Sagik. 1979. Wastewater aerosol stirs controversy. Water and Sewage Works 126:56–57.

Sorber, C.A., H.T. Bausum, S.A. Schaub, and M.J. Small. 1976. A study of bacterial aerosols at a wastewater irrigation site. J. Water Poll. Control Fed. 48(10):2367–2379.

Teltsch, B., S. Kedmi, L. Bonnet, Y. Borenzstajn-Rotem, and E. Katzenelson. 1980. Isolation and identification of pathogenic microorganisms at wastewater-irrigated fields: ratios in air and wastewater. Appl. Environ. Microbiol. 39(6):1183–1190.

Teltsch, B., H.I. Shuval, and J. Tadmor. 1980. Die-away kinetics of aerosolized bacteria from sprinkler application of wastewater. Appl. Environ. Microbiol. 39(6):1191–1197.

Symposium/Conference Proceedings

Baldwin, L.B., J.M. Davidson, and J.F. Gerber, eds. 1976. Proceedings of the symposium on virus aspects of applying municipal wastes to land. University of Florida, Gainesville.

Cramer, H.E. 1957. A practical method for estimating the dispersion of atmospheric contaminants. Pages 33–35 in Proc. First Natl. Conf. on Appl. Meteorol. C. Amer. Meteorol. Soc.

Pahren, H.R., and W. Jakubowski, eds. 1980. Wastewater aerosols and disease. EPA-600/9-80-028. U.S. Environmental Protection Agency, Cincinnati, OH.

Sagik, B.P., and C.A. Sorber, eds. 1978. Proceedings of the conference on risk assessment and health effects of land application of municipal wastewater sludges. University of Texas, San Antonio.

U.S. Army Corps of Engineers. 1978. Proceedings of the International Symposium on state of knowledge in land treatment of wastewater. U.S. Army Corps of Engineers, Hanover, NH.

Technical Reports

Bausum, H.T., S.A. Schaub, and K.F. Kenyon. 1978. Viral and bacterial aerosols at a wastewater spray irrigation site. Technical Report 7804, U.S. Army Medical Bioengineering Research and Development Laboratory, Ft. Detrick, MD.

Carnow, B., et al. 1979. Health effects of aerosols emitted from an activated sludge plant. EPA-600/1-79-019. U.S. Environmental Protection Agency, Cincinnati, OH.

Johnson, D.E., D.E. Camann, J.W. Register, R.J. Prevost, J.B. Tillery, R.E. Thomas, J.M. Taylor, and J.M. Hosenfeld. 1978. Health implications of sewage treatment facilities. EPA-600/1-78-032. U.S. Environmental Protection Agency, Cincinnati, OH.

Johnson, D.E., D.E. Camann, J.W. Register, R.E. Thomas, C.A. Sorber, M.N. Guentzel, J.M. Taylor, and H.J. Harding. 1980. The evaluation of microbiological aerosols associated with the application of wastewater to land: Pleasanton, CA. EPA-600/1-80-015. U.S. Environmental Protection Agency, Cincinnati, OH.

Johnson, D.E., D.E. Camann, H.J. Harding, and C.A. Sorber. 1979. Environmental monitoring of a wastewater treatment plant. EPA-600/1-79-027. U.S. Environmental Protection Agency, Cincinnati, OH.

Sorber, C.A., H.T. Bausum, and S.A. Schaub. 1974. An assessment of potential virus hazards associated with land application of wastewaters. Pages 241–252 in Virus Survival in Water and Wastewater Systems, Center for Research in Water Resources, University of Texas, Austin, TX.

Turner, D.B. 1970. Workbook of atmospheric dispersion estimates. U.S. Environmental Protection Agency, Research Triangle Park, NC. Publication AP-26.

☆USGPO: 1982 — 559-092/3395