EPA-600/8-85-026 c.2

PB86-108636

WASTEWATER TREATMENT PLANT INSTRUMENTATION HANDBOOK

EMA, Incorporated
St. Paul, MN

Sep 85

U.S. DEPARTMENT OF COMMERCE
National Technical Information Service
NTIS®

EPA/600/8-85/026
September 1985

WASTEWATER TREATMENT PLANT INSTRUMENTATION HANDBOOK

by

Robert C. Manross
EMA, Inc.
St. Paul, Minnesota 55101

Contract No. 68-03-3130

Project Officer

Walter W. Schuk
Wastewater Research Division
Water Engineering Research Laboratory
Cincinnati, Ohio 45268

WATER ENGINEERING RESEARCH LABORATORY
OFFICE OF RESEARCH AND DEVELOPMENT
U.S. ENVIRONMENTAL PROTECTION AGENCY
CINCINNATI, OHIO 45268

TECHNICAL REPORT DATA
(Please read Instructions on the reverse before completing)

1. REPORT NO. EPA/600/8-85/026	2.	3. RECIPIENT'S ACCESSION NO. PB86 109636/AS
4. TITLE AND SUBTITLE Wastewater Treatment Plant Instrumentation Handbook		5. REPORT DATE September 1985
		6. PERFORMING ORGANIZATION CODE
7. AUTHOR(S) Robert C. Manross		8. PERFORMING ORGANIZATION REPORT NO.
9. PERFORMING ORGANIZATION NAME AND ADDRESS EMA, Inc. Control System Engineers 480 Cedar Street St. Paul, MN 55391		10. PROGRAM ELEMENT NO.
		11. CONTRACT/GRANT NO. 68-03-3130
12. SPONSORING AGENCY NAME AND ADDRESS Water Engineering Research Laboratory Office of Research and Development U.S. Environmental Protection Agency Cincinnati, OH 45268		13. TYPE OF REPORT AND PERIOD COVERED Final
		14. SPONSORING AGENCY CODE EPA/600/14

15. SUPPLEMENTARY NOTES Project Officer: Walter W. Schuk (513) 684-2621
Prepared as a follow-up to the Technology Transfer Wastewater Instrumentation and Control Seminar, November 29 - December 2, 1983, in Chicago, Illinois.

16. ABSTRACT

Instruments are required for proper operation of wastewater plants. To be of use the instruments must be operable and maintainable. This requires care in the selection, application and installation of instruments and control equipment. Contents of the handbook address the "how-to" of designing and applying instrumentation and controls for waste treatment operations. Special focus is given to problems, causes and solutions.

The handbook covers instruments, valves and pumps commonly used in wastewater plants. The material covers

- Basic Theory of Operation
- Application
- Installation Requirements
- Maintenance and Calibration Requirements
- Selection and sizing Specifications

The material is intended for use by individuals with no previous background or specialized knowledge of instrumentation or control equipment. Those responsible for reviewing the work done by others, may find the designers checklist in each section a helpful reference. If more technical information is required, a reference is included at the end of each section.

17. KEY WORDS AND DOCUMENT ANALYSIS

a. DESCRIPTORS	b. IDENTIFIERS/OPEN ENDED TERMS	c. COSATI Field/Group
Instrument Pump Valve Control Analytical Flow Level Pressure Measurement		

18. DISTRIBUTION STATEMENT Release Unlimited	19. SECURITY CLASS (This Report) Unclassified	21. NO. OF PAGES 310
	20. SECURITY CLASS (This page) Unclassified	22.

EPA Form 2220-1 (Rev. 4-77) PREVIOUS EDITION IS OBSOLETE

DISCLAIMER

The information in this document has been funded wholly or in part by the United States Environmental Protection Agency under Contract No. 68-03-3130 to EMA, Inc. It has been subject to the Agency's peer and administrative review, and it has been approved for publication as an EPA document. Mention of trade names or commercial products does not constitute endorsement or recommendation for use.

FOREWORD

The U.S. Environmental Protection Agency is charged by Congress with protecting the Nation's land, air, and water systems. Under a mandate of national environmental laws, the agency strives to formulate and implement actions leading to a compatible balance between human activities and the ability of natural systems to support and nurture life. The Clean Water Act, the Safe Drinking Water Act, and the Toxic Substances Control Act are three of the major congressional laws that provide the framework for restoring and maintaining the integrity of our Nation's water, for preserving and enhancing the water we drink, and for protecting the environment from toxic substances. These laws direct the EPA to perform research to define our environmental problems, measure the impacts, and search for solutions.

The Water Engineering Research Laboratory is that component of EPA's Research and Development program concerned with preventing, treating, and managing municipal and industrial wastewater discharges; establishing practices to control and remove contaminants from drinking water and to prevent its deterioration during storage and distribution; and assessing the nature and controllability of releases of toxic substances to the air, water, and land from manufacturing processes and subsequent product uses. This publication is one of the products of that research and provides a vital communication link between the researcher and the user community.

This handbook was developed to provide users and designers with a guide for selecting and applying instrumentation in wastewater treatment plants. The material is intended for use by individuals with no previous background or specialized knowledge of instrumentation.

Francis T. Mayo, Director
Water Engineering Research Laboratory

ABSTRACT

This handbook is to be used as a guide for selecting and maintaining instruments and final control elements in wastewater treatment plants. Basic applications covered include analytical measurement, flow measurement (liquid and gas), level measurement, pressure measurement, pump control, and control valves.

Priority has been given to basic proven instruments that meet specific needs and provide tangible benefits. The material covers the theory of operation, application guidelines, installation requirements, maintenance and calibration requirements, and selection and sizing specifications.

The handbook is intended to be used by individuals with no previous background or specialized knowledge of instrumentation and control equipment. A designer's checklist is provided for each of the instruments described in the handbook.

This report was submitted in partial fulfillment of Contract No. 68-03-3130 by Dynamac, Inc., Rockville, Maryland, under the sponsorship of the U.S. Environmental Protection Agency. The report was prepared under subcontract to EMA, Inc., St. Paul, Minnesota. This report covers the period May 1982 to December 1983, when work was completed.

CONTENTS

FIGURES

FIGURES
(Continued)

FIGURES
(Continued)

FIGURES
(continued)

FIGURES
(Continued)

FIGURES
(continued)

TABLES

TABLES
(continued)

ABBREVIATIONS AND SYMBOLS

ABBREVIATIONS

AC	-- alternating current
cm	-- centimeter
C	-- centigrade
CPU	-- central processing unit (computer)
d	-- orifice or venturi throat diameter
D	-- pipe inside diameter
dc	-- direct current
DAS	-- data acquisition system
DDC	-- direct digital control
DEAC	-- digitally emulated analog control
DO	-- dissolved oxygen
F	-- Fahrenheit
ft/s	-- feet per second
G	-- specific gravity
gal	-- gallon
gpm	-- gallons per minute
H	-- head
Hz	-- hertz
h	-- head in inches of water column
hp	-- horsepower
in.	-- inch
in/s	-- inches per second
I/O	-- input/output
kl/m	-- kilo-liters/minute
LCD	-- liquid crystal display
LED	-- light emitting diode
L	-- length
l/m	-- liters/minute
lbm	-- pounds mass
mAdc	-- milliamperes direct current
m/s	-- meters per second
mg/l	-- milligrams per liter
MHz	-- mega-hertz
MUX	-- multiplexer
NEMA	-- National Electrical Manufacturer's Association
ODC	-- optimizing digital control
Pa	-- Pascals
psia	-- pounds per square inch absolute
psig	-- pounds per square inch gauge
R	-- Rankine

SCADA	-- supervisory control and data acquisition system
scfh	-- standard cubic feet per hour
SCR	-- silicon controlled rectifier
V	-- volts
vdc	-- volts direct current
VDT	-- video display terminal
W	-- watts
Xmtr	-- transmitter

SYMBOLS

%	-- percent
Δ	-- delta or differential
$\Delta\rho$	-- differential pressure
^{o}	-- degrees
>	-- greater than
<	-- less than
ρ	-- specified weight
β	-- d/D

ACKNOWLEDGMENTS

The handbook was prepared by EMA, Inc., Control System Engineers, as part of a technology transfer program entitled Wastewater Instrumentation and Control Seminar. The author acknowledges the significant contribution made by the following EMA personnel in producing the seminar and handbook:

Dag Knudsen
Rich Lackman
Claude Williams
Cheryl Schuebel
Roxanne Sabean

Helpful project guidance and assistance was provided by U.S. Environmental Protection Agency personnel, Walt Schuk, Water Engineering Research Laboratory, and Jim Smith, Center for Environmental Research Information. Special appreciation is given to Walt Schuk for his technical review of the handbook. His contributions have made it a better reference manual.

Appreciation is also expressed to the wastewater treatment plant personnel who shared their time, experiences, and opinions so the seminar and handbook could address real-world problems and solutions. In particular, instrument and control support people need to be recognized for their creativity in developing fixes, procedures, etc. for improved system performance. How greatly we would benefit if we could compile the unreported experiences that exist in all plants.

INTRODUCTION

Instruments are required for proper operation of wastewater treatment plants. Instrumentation for wastewater treatment was observed in various states of working order during visits to wastewater treatment plants over several years. Personnel at these sites often criticized the instruments for their failure to meet expectations of reliability and usefulness. However, the same instruments performed satisfactorily in other locations. We therefore concluded that the need was great to educate the engineering, user, and regulatory communities about the prerequisites for success with instrumentation.

As part of the U.S. Environmental Protection Agency's continuing technology transfer program, a 4-day seminar was held in November 1983 in Chicago to teach engineers and operators how to make wastewater treatment instruments operable and maintainable. The program presented examples of real-life problems and how they could be prevented. The problems were attributed to misapplication, incorrect installation, or improper maintenance.

This handbook grew out of the preparation for the seminar, which included documenting the basis for the information that was presented.

The handbook addressed more instruments than time permitted at the seminar, but it does not cover all instrumentation used in wastewater treatment plants. Priority has been given to basic, proven instruments that meet specific needs and provide tangible benefits. For the instruments contained in the handbook, the material covers:

1. Basic theory of operation
2. Application
3. Installation requirements
4. Maintenance and calibration requirements
5. Selection and sizing specifications

The information contained here should not be considered all-inclusive; rather, it is a beginning documentation of much-needed information on what really works in the field. What makes an instrument reliable and maintainable? Many of the answeres to this question lie outside the manufacturers' manuals. The solutions are sometimes revised procedures, test methods, or physical modifications. Too often this knowledge is not shared outside the treatment plant because the persons responsible do not consider their solutions unique or important.

When a decision is made to use an instrument for measuring a specific parameter there is an implied commitment to maintain that instrument in an operational state; thus, information describing the maintenance and calibration requirements of a particular instrument are a critical part of the equipment selection process.

A list of technical references is included at the end of each section. For the reader's convenience, Appendix A contains a complete list of all references used in the handbook. For ease in ordering, Appendix B lists the organization, address, and phone number where the references can be obtained.

1.0 ANALYTICAL MEASUREMENT

1.1 TOTAL CHLORINE RESIDUAL

A. Applications

The most common method of disinfecting wastewater plant effluents is chlorination. If free chlorine gas, liquid hypochlorite, or chlorimines are added to the effluent, the chlorine acts as an agent to destroy microscopic organisms that are disease producing or otherwise objectionable. Over the years criteria for rates of adding chlorine, detention time, and chlorine residual at the end of the detention period have been established. If this criteria is adhered to, it is assumed the desired level of disinfection, elimination of harmful organisms, will be achieved.

Chlorine residual analyzers monitor the residual chlorine in an effluent stream. This is an indirect measure. Current accepted technology of monitoring chlorine residual is based on the assumption that maintaining a minimum chlorine residual (usually 1.0 mg/l) 30 minutes after adding chlorine will result in an effective disinfection level.

If the chlorine residual drops below the desired minimum level, the rate of chlorine addition is increased. Conversely, an increase above the minimum results in a decrease in the chlorine addition rate. A chlorine residual analyzer can be used to determine on-line if the correct chlorine dosage is being used. If corrective action, when indicated by the meter, is taken, then the operation can run closer to the minimum level, resulting in a minimum of chlorine usage.

The alternative to using a chlorine residual analyzer is to run tests in the laboratory. This is not as convenient or timely as an on-line unit. The on-line analyzer provides a continuous reading of the chlorine residual.

B. Principle of Operation

Several different measurement methods are used for chlorine residual, including colorometric, amperometric, and polarographic. For application in wastewater, amperometric is the most common for measuring total chlorine residual. Therefore, discussion in this section is restricted to amperometric measurement.

The amperometric measurement method uses two dissimilar metals held in a solution or electrolyte. A voltage is applied to the two metals which act as electrodes. Electrons flow from the negative electrode to the positive electrode generating a current. Figure 1.1 illustrates the amperometric cell. The amount of current flowing between the electrodes is proportional to the amount of chlorine present in the solution.

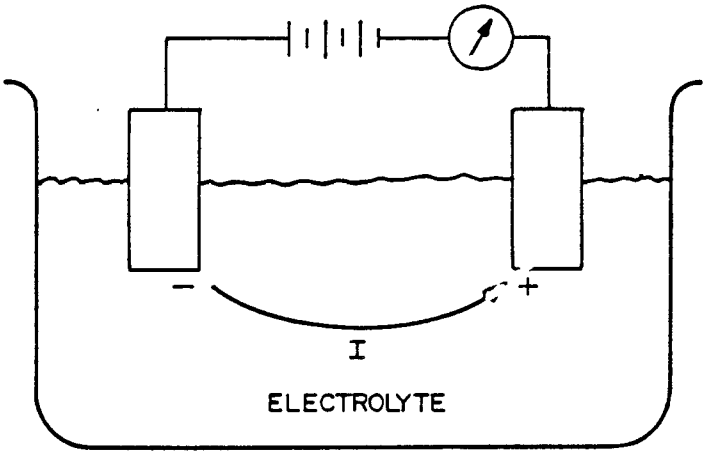

"I" PROPORTIONAL TO Cl CONCENTRATION

Figure 1.1. Amperometric measurement.

The basic amperometric chlorine residual analyzer is illustrated in Figure 1.2. It consists of an inlet sample tank and flow regulator, reagent solutions with metering pumps, measurement cell, and electronic signal converter. The metered sample stream acts as the electrolyte as it flows through the measurement cell. Since chlorine in the sample can exist in many different chemical forms, the sample is conditioned with other chemicals in order for the cell to measure all chlorine present in the stream.

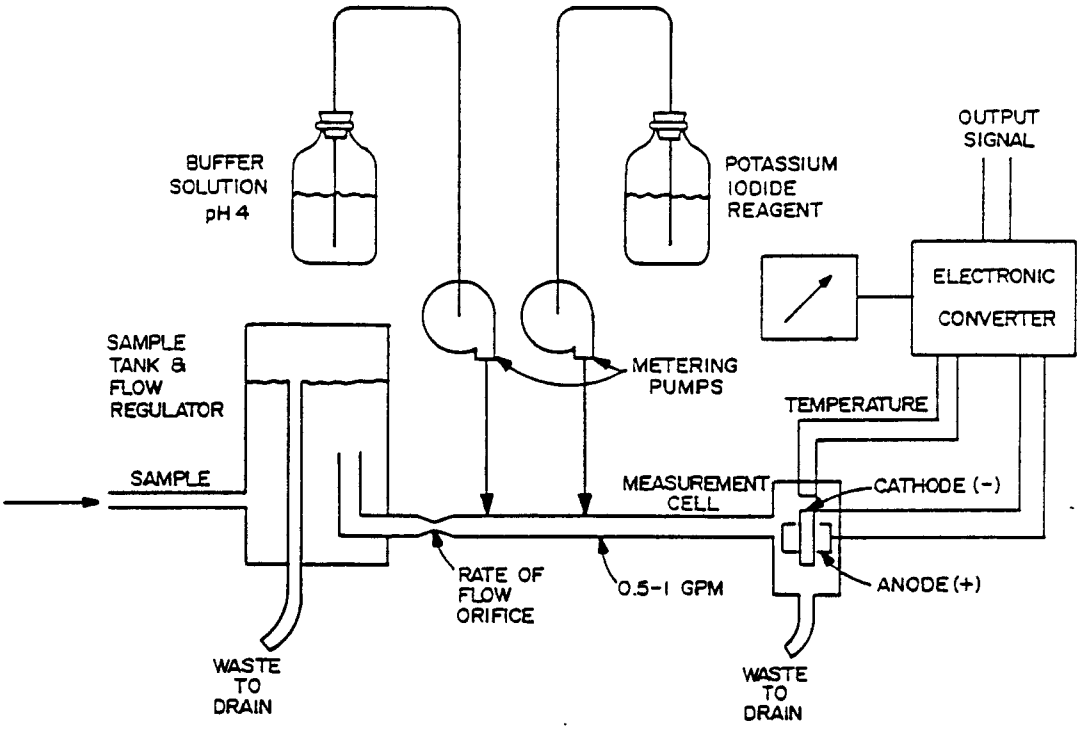

Figure 1.2. Amperometric total chlorine residual analyzer.

The current generated in the measurement cell is very sensitive to temperature variations. A reading can change as much as 3% per degree C temperature change. Therefore, automatic temperature compensation is necessary. A temperature sensor is located in the measurement cell to provide temperature feedback to the electronic converter. This feedback is then used to correct the indicator and output signals to null-out the temperature effects.

C. Accuracy and Repeatability

The accuracy of chlorine residual analyzers is $\pm 3\%$ of full scale. Several ranges are normally available from 0 - 1 mg/l to 0 - 20 mg/l. The measurement error could range from 0.03 - 0.6 mg/l depending on the operating range used.

Repeatability of measurement on samples of equal chlorine concentration should be within ±1% of full scale.

Automatic temperature compensation should enable this accuracy and repeatability to hold over a sample temperature range of 0 - 50° C (32 - 122° F).

D. Manufacturer's Options

A few options are available from manufacturers of chlorine residual analyzers. Some to consider are:

1. Local indicator in the analyzer case,

2. Supply of reagents,

3. Integral solids filter, and

4. Output signal for remote monitoring of the chlorine residual.

E. Installation

Chlorine residual analyzers are normally housed in free standing enclosures. A sample for measurement is piped from the chlorine contact basin to the analyzer. This sample system is a critical element for a successful analyzer application. A complete installation consists of a sample point, sample transport, and the analyzer.

1. Sample point location.

It is desirable to analyze the effluent after there is sufficient contact time between the chlorine and effluent stream for disinfection to occur. A commonly accepted disinfection period is 30 minutes. Therefore, it is desired to deliver a sample to the analyzer 30 minutes after adding chlorine. To do this, you must be concerned about the time in the contact tank plus the time to deliver a sample to the analyzer. This is the total contact time as shown in Figure 1.3.

Physically it is desired to locate the sample point so it does not contribute unnecessary deadtime in chlorine residual analysis. In addition, take care to ensure the sample point is clean, thoroughly mixed, and representative of the monitored stream.

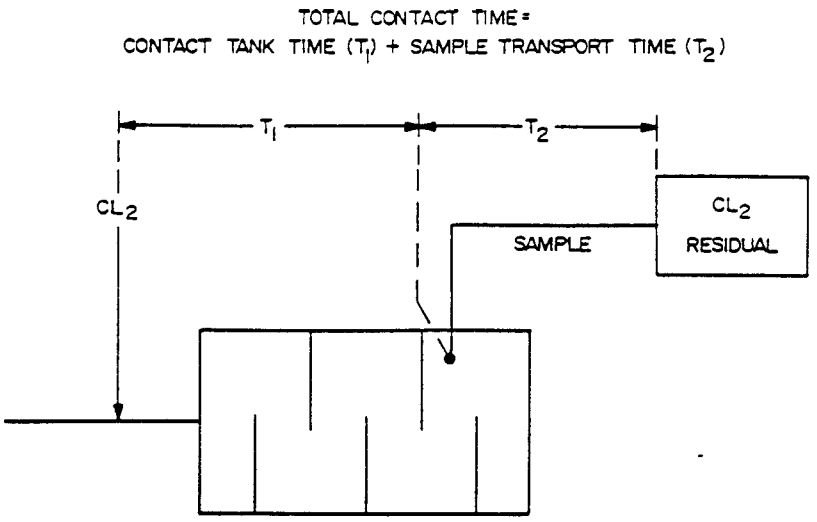

Figure 1.3. Sample point location.

2. Sample transport.

A sample line and pump are required to deliver the sample to the analyzer. Features of this sample transport assembly are shown in Figure 1.4. You should:

a. Select a pump capable of delivering 20 - 40 l/m (5 - 10 gpm).

b. Size the pipe for a sample velocity of 1.5 - 3.0 m/s (5 - 10 ft/s).

c. Determine the length of sample line so it will provide the desired transport time.

d. Install a valve next to the analyzer so samples can be taken for calibration checks on the analyzer.

e. Provide a source of clean water and required valves so the sample line can be backflushed to prevent plugging.

f. If solids are present, install a filter.

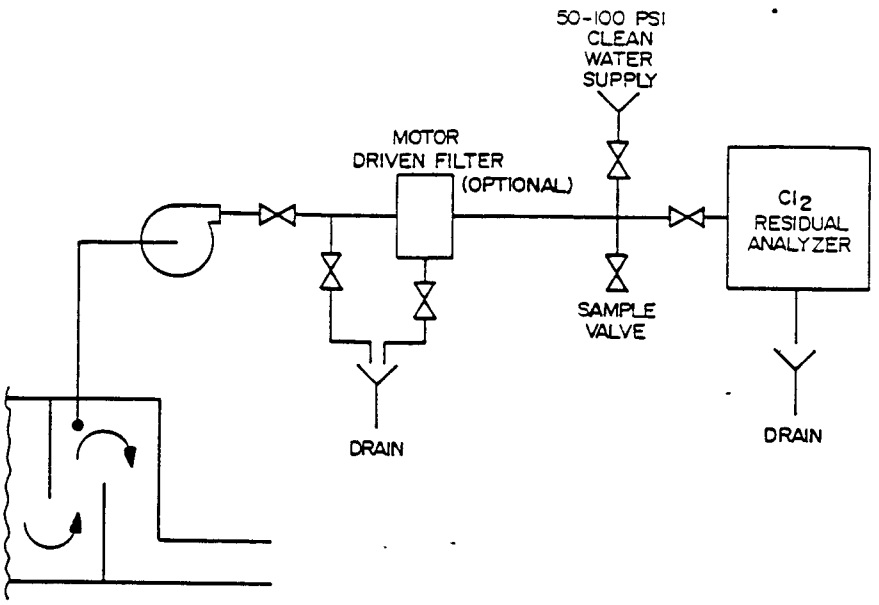

Figure 1.4. Sample transport.

3. Chlorine analyzer.

   Install the analyzer so it is easy to service and maintain.

   a. Provide ample space, minimum of 1 m (3 ft), around all sides of the analyzer.

   b. Locate it next to a floor drain.

   c. Provide a table nearby with the necessary equipment and chemicals to perform calibration checks.

   d. Provide a separate circuit on a lighting panel to power the analyzer.

F. Designer's Checklist

Ask the following questions when designing or reviewing chlorine residual analyzer applications. All checklist questions should be answerable with a "yes" for correct installation.

1. Is remote monitoring required? If so, has an output signal compatible with the receiving instrument been called for in the specifications?

2. Is a local indicator provided?

3. Is the sample point located so that during normal plant flows the sum of the contact tank time and sample transport time equals 30 minutes?

4. Is the sample pipe length tuned to provide the required delivery time?

5. Will the sample point location be thoroughly mixed and representative of the process stream?

6. Is the sample pump and pipe sized to provide the recommended flow rates and velocities?

7. Has a sample valve been provided adjacent to the analyzer?

8. Can the sample line be backflushed?

9. Is there adequate space around the analyzer for servicing the instrument?

G. Maintenance and Calibration

Task	Frequency
1. Check reagent supply.	Daily.
2. Check analyzer calibration.	Daily.
3. Check sample flow through analyzer.	Daily.
4. Check reagent flow to sample line.	Daily.
5. Calibrate analyzer.	When need is indicated by calibration check.
6. Replace tubing on reagent pumps.	Monthly.
7. Backflush sample line.	Weekly.
8. Clean analyzer drain lines.	Weekly.
9. Clean cell electrodes.	Monthly.

H. Deficiencies

The following problems have been encountered in existing chlorine residual analyzer installations:

1. The sample point does not provide a representative mixed sample. This may be due to poor mixing, sample point location, or contact tank design.

2. Contact time from the point of chlorine addition to the analyzer is too long.

3. Sample lines plug and cannot be backflushed.

4. No provision for taking a sample at the analyzer for calibration checks.

5. Cramped space around the analyzer making maintenance difficult.

6. No reagents in the analyzers.

7. Using reagents with the wrong concentration.

I. References

1. Liptak, B. G. and K. Venczel. Instrument Engineers Handbook of Process Measurement. Chilton Book Company, Radnor, Pennsylvania, 1969, Revised, 1982.

2. American Petroleum Institute. Manual on Installation of Refinery Instruments and Control Systems. Part II - Process Stream Analyzers. API RP550, Washington, DC, 1977, 3rd Edition.

3. Kulin, G. Recommended Practice for Measuring Residual Chlorine in Wastewater Treatment Plants with On-Line Analyzers. U.S. Environmental Protection Agency, Cincinnati, Ohio.

1.2 DISSOLVED OXYGEN METERS

A. Applications

Generally, dissolved oxygen (DO) meters in wastewater processes provide an approximate measurement of the oxygen available to support biological activity; in receiving waters, the DO meters monitor one parameter of water quality.

TABLE 1.1. DISSOLVED OXYGEN METER APPLICATION GUIDELINES

Recommended	Not Recommended
Aeration tank	Chlorine contact tank
Oxygenation basins	H_2S bearing streams
Mixed liquor streams	
Secondary effluent	
Plant effluent	
Sample systems	

B. Principles of Operation

Commercial DO meters consist of an electrochemical cell (called the probe), and a signal conditioner or transmitter.

The two principal types of electrochemical cell used in DO probes are:

1. Galvanic cell.

2. Polarographic cell.

Galvanic and polarographic cells have very similar operating principles. Both cells consist of an electrolyte and two electrodes as shown in Figure 1.5.

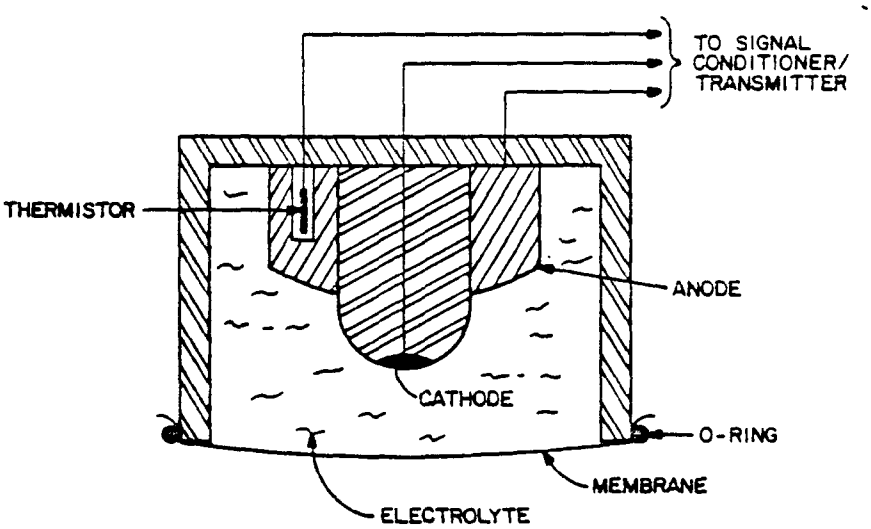

Figure 1.5. Membrane type DO probe cell.

One difference is that the polarographic cell requires a polarizing voltage in the range of 0.5 to 1.0 vdc. Another difference lies in selection of electrode materials. For example, in one proprietary probe design, the electrodes are emersed directly in the process stream where process fluid acts as the electrolyte. However, in most commercially available probes, the electrolyte is contained by a gas permeable membrane, and oxygen is brought into contact with the electrodes by the action of diffusion. In either case, fluid flow past the probe greater than 30 cm/s (1 ft/s), is generally required to maintain a representative sample. Whether the probe is of the membrane or non-membrane type, oxygen is reduced at the cathode, where the half cell reduction reaction is generally:

$$O_2 + 2H_2O + 4 \text{ electrons} \rightarrow 4\ OH^-$$

and at the anode, the anode metal is oxidized. The result of this reduction/oxidation process is a flow of electrons from the cathode to the anode proportional to the oxygen dissolved in the process stream. The rate of this reduction/oxidation process is strongly affected by temperature. Therefore, accurate temperature measurement and compensation is essential to an accurate DO measurement. Temperature is usually monitored by a thermistor located in the probe, and compensation is made in the signal conditioner/transmitter electronics.

1.2

Suspended and dissolved substances in the process stream can also affect electron flow. When solids accumulate on the membrane, they reduce the rate of oxygen transfer to the electrodes.

A mechanical grindstone continuously polishes the surface of non-membrane probes to keep the electrodes clean. To maintain gas permeability, fouled membrane probes must be manually cleaned. Certain dissolved gases interfere with DO measurement by either non-membrane or membrane probes. Common gases to be avoided are chlorine, hydrogen sulfide, carbon dioxide, and sulfur dioxide. Chlorine will be read by the probe as oxygen; carbon dioxide can neutralize some electrolytes; and hydrogen sulfide and sulfur dioxide can poison some metals used for an anode.

C. Accuracy and Repeatability

Claims made by individual meter manufacturers for the combined accuracy of the probe and signal conditioner/transmitter vary from ±1-3% of full scale at the calibration temperature.

Additional error of ±1% can be expected for each 5.0° C (9.0° F) of change from the calibration temperature. Even with temperature compensation, an additional error of 3 to 4% can be expected over an operating range of 0° to 50°C (32°-122°F).

A combined DO measurement accuracy of ±2-4% of full scale can be achieved in most meters under the conditions generally encountered at municipal wastewater treatment plants. For a meter with a range of 0.0-10 mg/l DO, this DO measurement accuracy represents a measurement uncertainty of 0.4-0.8 mg/l; however, the uncertainty would double (0.8-1.6 mg/l) for a meter with a range of 0.0-20.0 mg/l.

The calibration of most probes will change after initial installation, or reinstallation after probe repair. Stabilization time, depending on the manufacturer, ranges from a couple of hours to several days. Output readings must be stabilized before the accuracies above apply.

D. Manufacturer's Options

1. Remote calibration unit can be installed near the probe to permit calibration where the transmitter is not within 50 ft or is not located within sight of the probe.

2. Ranges can be switch selectable; some of the more common range selections are:

   a. 0-3 mg/l, 0-15 mg/l.
   b. 0-5 mg/l, 0-10 mg/l, 0-20 mg/l.

3. Transmitter Output Signals.

   a. 4-20 mAdc into 650 ohms isolated.
   b. 10-50 mAdc into 250 ohms isolated.
   c. 0-5 vdc isolated.

4. Input Power.

   a. 115 vAC, 60 Hz.

   b. 220 vAC, 60 Hz.

   c. 24 VDC

5. Transmitter enclosure.

   a. Panel mounted, NEMA 1B - general purpose.

   b. Surface mounted, NEMA 4 - watertight.

6. Probe mounting.

   a. Handrail brackets.

   b. Tank side wall brackets.

   c. Probe holder available in lengths of 3-6 m (10-20 ft).

7. Probe cable in lengths of 7.5-15 m (25-50 ft).

8. Agitator or ultrasonic cleaner for use where fluid velocity across the probe is less than 30 cm/s (1 ft/s).

9. High/low alarm outputs.

10. Junction box for terminating probe cable if the transmitter or remote calibration station is more than 10 feet from the probe connection head.

E. Installation

1. In open tanks and channels.

In most cases, open tanks have a convenient guard rail on which to mount the probe and transmitter (or the junction box, where the transmitter is remote from the probe). If the guard rail is not conveniently located, bolt the probe holder brackets to the free board area of the tank walls. The probe holder must be rigidly supported, but it must also be readily removable for probe maintenance (see Figure 1.6 for a typical configuration). Tilt the probe at an angle away from the general component of process flow to prevent air bubbles and debris from accumulating on the membrane. Submerge probes 60-90 cm (2-3 ft) in an area having sufficient agitation, and is representative of the process. Determine the final probe location through testing during startup.

2. In closed oxygenation tanks.

Probe holders can be inserted in the process stream through a flanged opening in the tank cover. The holder must be rigidly fixed to the tank cover by a flange or quick connect sample port cover that is removable for probe maintenance. Also, a stilling well can be installed to provide a gas seal and a lateral support for an extended probe length. Probe placement in the process fluid is the same as in open tanks.

Mount the transmitter or junction box on a stand near the probe.

3. On pipelines.

Do not subject probes mounted on pipelines to pressures greater than the manufacturer's recommendation, usually about 350 Pa (50 psi). The selected probe must be installed to ensure equal pressure on both sides of the membrane. Usually, probes are mounted in a tee in the pipeline with either a corporation seal on the probe or a bypass line to allow removal of the probe for maintenance. If the probe is part of a sample system, care must be taken to have a short transport time from the process to the probe. Where possible, direct measurement at the point of interest is preferable to transporting a sample for DO measurement.

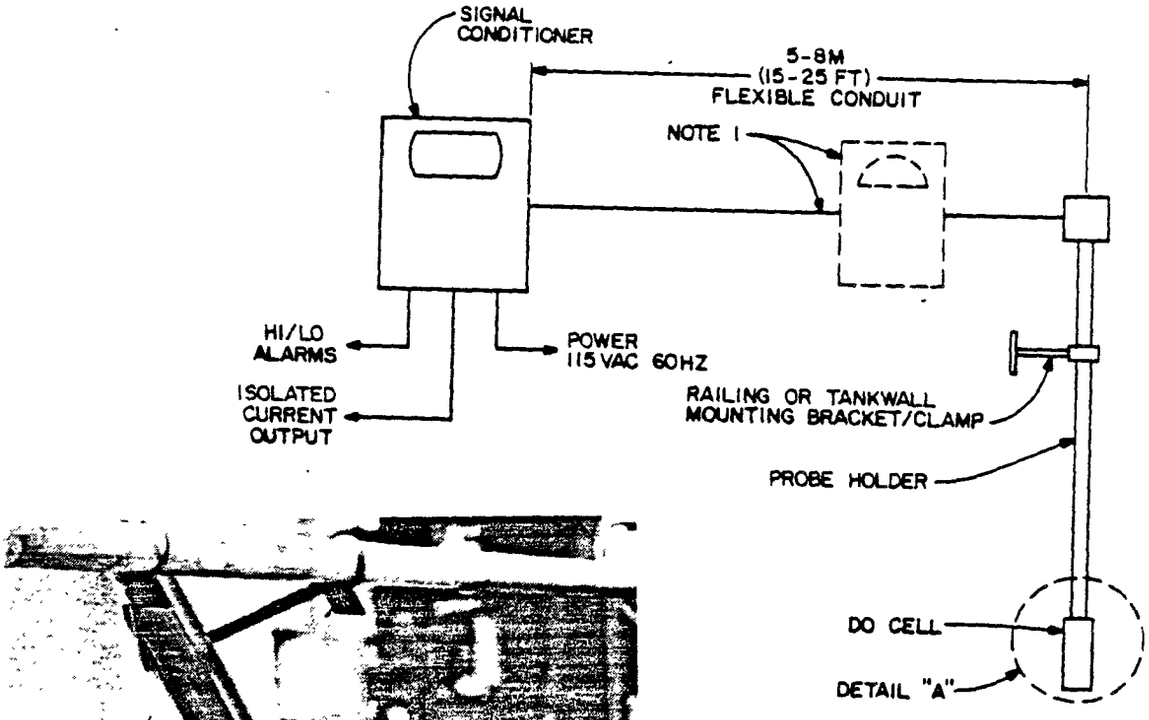

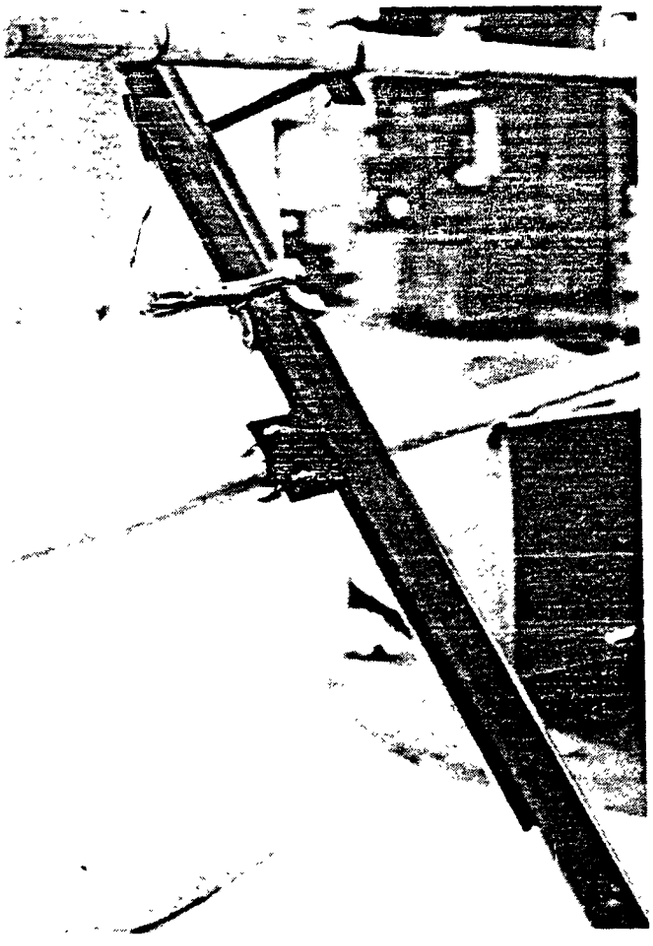

DETAIL A

NOTE:
1. IF IT IS NOT POSSIBLE TO LOCATE THE SIGNAL CONDITIONER NEAR THE PROBE, INSTALL A REMOTE CALIBRATION STATION CLOSE TO THE PROBE. INSTALL RIGID CONDUIT & EXTEND THE SIGNAL BETWEEN THE CALIBRATION STATION & THE SIGNAL CONDITIONER. DO NOT EXCEED 120M (400 FT).

Figure 1.6. DO meter configuration.

F. Designer Checklist.

Ask the following questions when designing or reviewing dissolved oxygen meter applications. All checklist questions should be answered "yes."

1. If a non-membrane probe is being considered, is the process stream's conductivity greater than 100 micro - mhos? Is the conductivity stable?

2. Are interfering dissolved gases absent (chlorine, hydrogen sulfide, carbon dioxide, and sulfur dioxide)?

3. Does the process fluid wash the probe at a rate greater than 30 cm/s (1 ft/s)?

4. Does mounting eliminate the possibility of air bubbles being trapped at the measuring surface?

5. Does the probe see a sample representative of the process?

6. Is the probe mounted securely without causing likely collection sites for debris?

7. Can the probe be removed easily for inspection or maintenance?

8. Is installation of the meter designed so one person can calibrate it?

9. Is the transmitter protected from the weather where necessary?

10. Does the meter have automatic temperature compensation?

11. Is the probe installed so it is always immersed in the process liquid?

G. Maintenance and Calibration

1. Membrane probe meters.

Task	Frequency
a. Clean membrane.	Depends on process stream characteristics. Some membranes must be cleaned daily; but more typically, every two days or once a week. Membrane breakage is a

		common problem. To reduce cleaning time, check calibration with a portable DO probe and clean membrane only when the two meter readings differ by more than 0.5 mg/l.
b.	Replace membrane.	Whenever membrane breaks or when electrolyte is replaced.
c.	Electrolyte replacement.	Every three to six months.
d.	Calibration to portable probe.	Every other day.
e.	Air calibration.	After membrane cleaning.
f.	Calibration to standard.	On initial installation or after major repair.

2. Non-membrane probe meters.

Task		Frequency
a.	Inspect and clean grindstone.	Every two months.
b.	Replace grindstone.	Every six months.
c.	Calibrate to standard.	Weekly or bi-weekly are typical calibration intervals.

H. Deficiencies

The following problems are commonly reported for dissolved oxygen meters.

1. Agitator or cleaner becomes fouled with hair or fibers. Where possible, avoid use of agitators, mechanical cleaners, probe guards, or shields.

2. The probe becomes fouled within a few hours due to process stream characteristics such as grease or slime growth.

3. The probe cannot be withdrawn from the process stream because of mounting.

4. One person cannot calibrate the probe because of the mounting bracket, difficult alignment, or awkward mounting.

5. The probe cannot be calibrated by one person because the transmitter is too far from the probe and no remote calibration unit is installed.

6. The probe is placed in a "dead" area of the tank. Poor mixing with the rest of the tank results in a false signal that does not show the true state of the process.

I. References

1. Liptak, B.G. and K. Venczel. Instrument Engineers Handbook of Process Measurement. Chilton Book Company, Radnor, Pennsylvania, 1969, Revised 1982.

2. APWA Research Foundation. Comparison of Field Testing of DO Analyzers. Chicago, Illinois, September, 1982.

3. Kulin, G. and W.W. Schuk. Evaluation of a Dissolved Oxygen Field Test Protocol. EPA 78-D-X0024-1, U.S. Environmental Protection Agency, Cincinnati, Ohio, 1978.

4. American Public Health Association, American Water Works Association, and Water Pollution Control Federation. Standard Methods For the Examination of Water and Wastewater; 15th Edition. American Public Health Association, Washington, DC, 1980.

1.3 pH

A. Applications

In wastewater treatment, pH sensors are used to monitor plant conditions, to monitor biological treatment process conditions, and to control acid/base additions for pH adjustment.

Regulatory agencies require measurement of plant influent and effluent pH to describe overall plant conditions. It may also be necessary to monitor the pH of specific industrial discharges to give advance warning of possible toxic conditions.

While the activated sludge and most other biological processes can tolerate a variance of pH 5 to pH 9, some--such as anerobic digestion--are very pH sensitive. Normally monitoring of plant influent and primary effluent or MLSS (if applicable) is sufficient to warn of impending toxic conditions. The anerobic digestion process requires pH in the range 6.6 to 7.6 and will fail at pH's below 6.2. Because of this sensitivity, it is important to monitor the pH of anerobic digester liquor. However, because of sensor fouling, continuous monitoring of digester pH is not recommended.

PH adjustment is required for other processes where an on-line pH monitor can be used. This provides control loop feedback. For example, pH adjustment may be required to neutralize very low pH industrial wastes, to enhance phosphorous removal by alum addition or to adjust pH to optimum ranges for nitrification/denitrification.

Table 1 summarizes recommended applications for continuous monitoring with pH sensors.

TABLE 1.2. RECOMMENDED APPLICATION OF pH SENSORS.

Recommended	Not Recommended
Plant influent	Digesting sludge
Primary effluent 1)	
MLSS (if applicable) 1)	
Plant effluent	

1) In activated sludge plants primary effluent pH is optional if MLSS pH is available.

B. Principle of Operation

Commercial pH sensors all employ a glass membrane electrode that develops an electrical potential varying with the pH of the process fluid. A reference electrode is used to measure the potential generated across the glass electrode.

Figure 1.7 shows a typical pH sensor arrangement. The heart of the sensor is the glass membrane. An electrical potential varying with pH is generated across the membrane. This potential is measured and amplified by an electronic signal conditioner. The complete electric circuit includes the glass electrode wire, the glass membrane, the process fluid, the reference electrode fill solution and finally, the reference electrode wire.

Figure 1.8 shows an equivalent electric circuit of the pH sensor in Figure 1.7. Voltage at the input of the amplifier is:

$$E_i + E_r - E_g = 0$$

and:

$$E_i = E_g - E_r$$

Where:

E_i = amplifier input, mv
E_g = glass electrode potential, mv
E_r = reference electrode potential, mv

The glass electrode has the approximate characteristic:

$$E_g = K1 + K2(pH)$$

So voltage at the amplifier input is:

$$E_i = K1 + K2(pH) - E_r$$

K1 = asymmetric potential, mv
K2 = electrode gain, mv/pH

The reference electrode is designed so its potential E_r is constant with pH and other chemical characteristics of the process fluid. The asymmetric potential K1 varies from sensor to sensor. It also changes as the sensor ages. For this reason pH sensors must be periodically standardized against buffer solutions of known pH. Figure 1.9 illustrates the effects of varying asymmetric potential.

The electrode gain K2 is a function of temperature. For this reason most commercial pH sensors include automatic temperature compensation. A temperature sensor in the process fluid adjusts amplifier gain to compensate for changes in electrode gain which are caused by temperature. Figure 1.10 illustrates the effects of varying electrode gain.

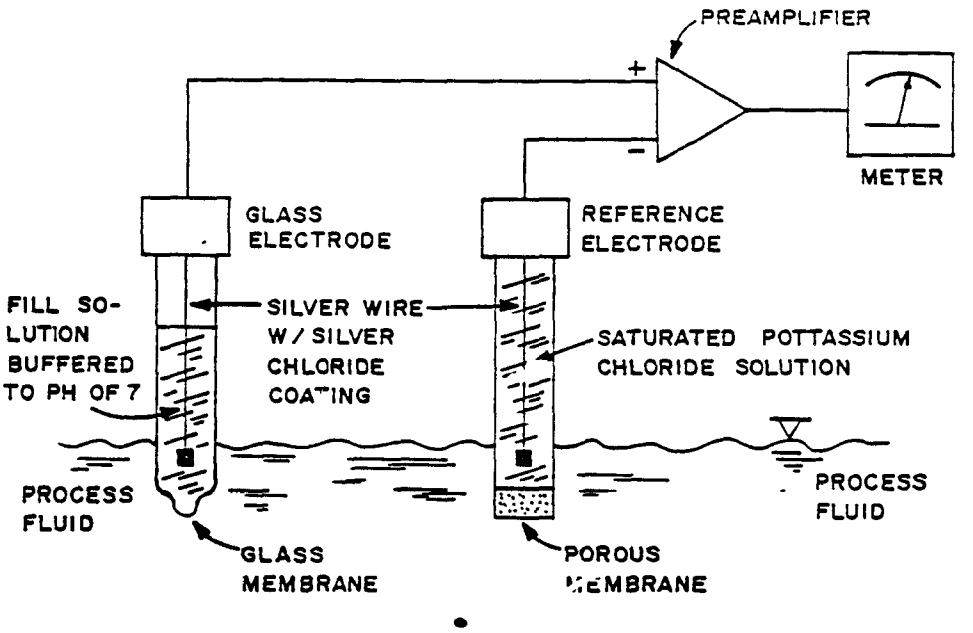

Figure 1.7. Typical pH sensor.

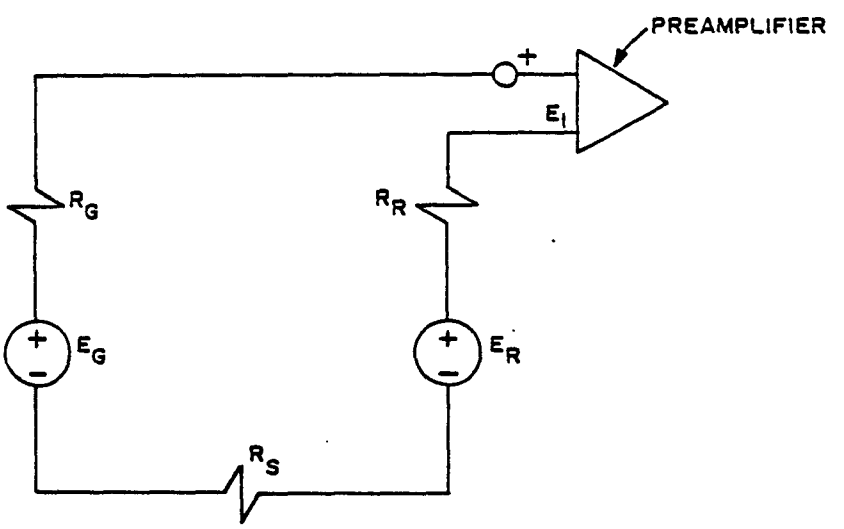

$E = K_1 + K_2 (PH)$

E_R = CONSTANT

R_G = RESISTANCE OF GLASS ELECTRODE

R_R = RESISTANCE OF REFERENCE ELECTRODE

R_S = RESISTANCE OF PROCESS FLUID SOLUTION

Figure 1.8. Equivalent circuit.

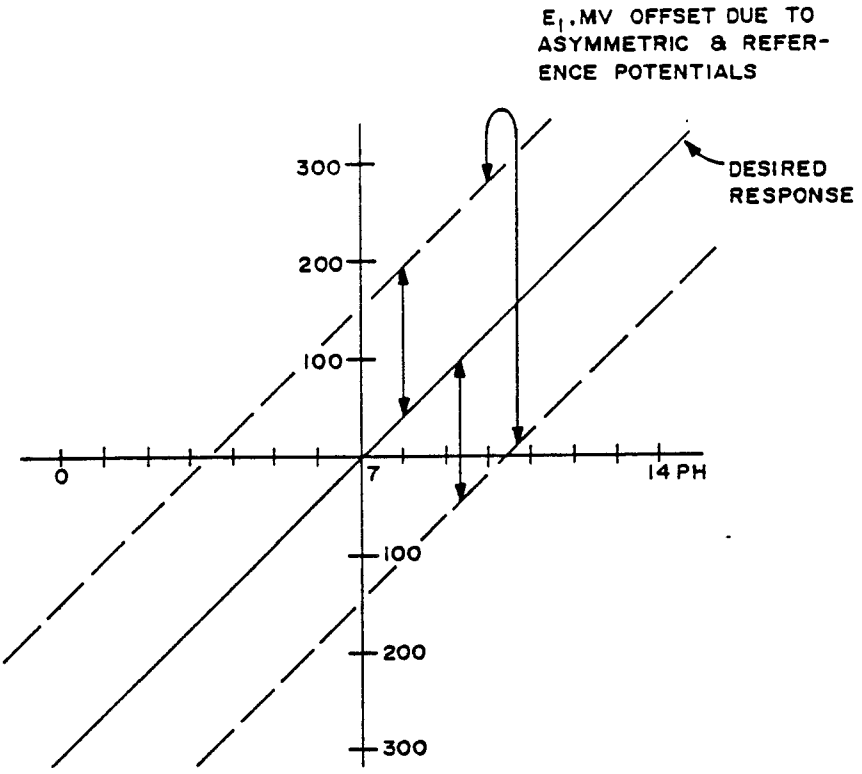

Figure 1.9. Effect of varying asymmetric potential at constant (25°C) temperature.

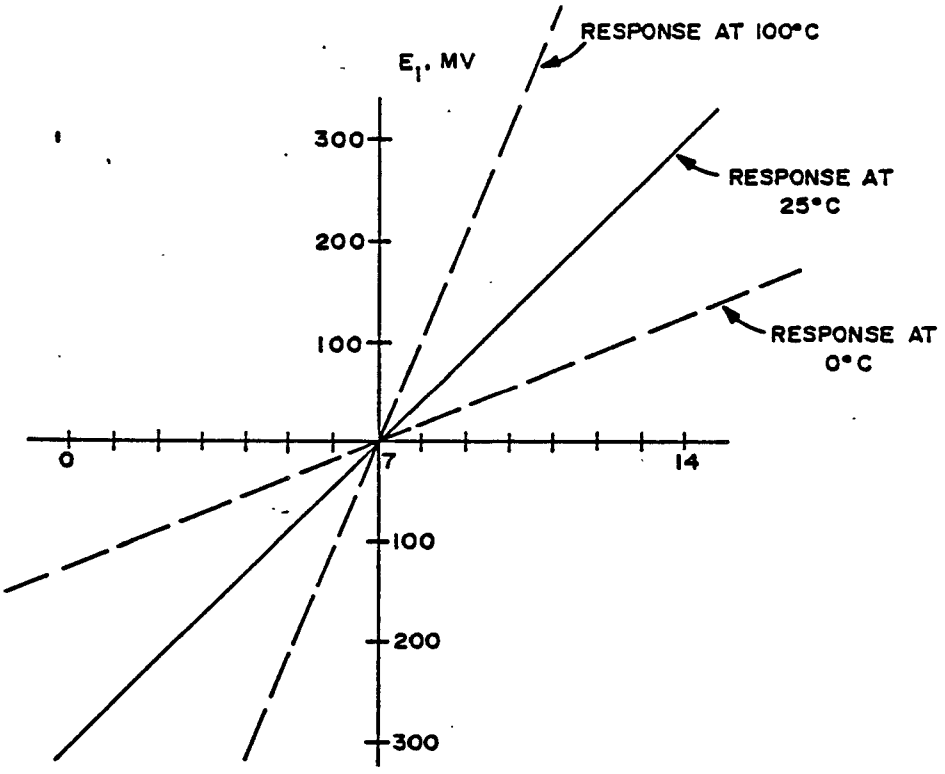

Figure 1.10. Effect of varying temperature at constant asymmetric potential.

C. Accuracy and Repeatability

Manufacturer claims for pH meter accuracy range from ±0.02 pH units to ±0.2 pH units. This represents the combined accuracy of the electrodes and the signal conditioner/transmitter.

Most pH meters include automatic temperature compensation. Temperature effects are negligible with these meters. Without temperature compensation, an additional error of .002 pH per degree centigrade difference from the calibration temperature can be expected.

The repeatability of pH meter measurements varies by manufacturer from 0.02 pH units to 0.04 pH units.

Stability (drift) is an important performance parameter that indicates how often meters must be recalibrated. Manufacturer claims for stability vary from .002 pH units drift per week to 0.2 pH units drift per week. With flow through probe mounts, the velocity of the sample can cause a shift (0.2 to 0.3 pH) in measured values.

Methods of reporting performance specifications vary among manufacturers. Adjustment of the method of reporting performance specifications to equal units of measure will show there is a large variance in both the accuracy and the stability claimed by different manufacturers. Generally, pH meters can achieve the following performance standards in wastewater treatment plants:

Accuracy:	±0.1 pH
Repeatability:	±0.03 pH
Stability:	±0.02 pH/week

D. Manufacturer Options

Most manufacturers sell several pH probes and mounting assembly configurations, each compatible with 3 or 4 transmitter/indicator/controller units commonly called pH analyzers. Probe and analyzer options are listed below.

1. Probe options:

   a. Mounting configurations for in-tank submersion, insertion in-process pipes, or side stream flow-through installation,

   b. Ultrasonic cleaning,

   c. Flow-powered cleaning,

   d. Mechanical wiper cleaning, and

   e. Double-junction reference electrodes.

2. Analyzer options:

   a. Analog or digital (LCD) indicator,

   b. Signal outputs available:

      0-16 MA isolated
      0-20 MA isolated
      4-20 MA isolated
      0-1 VDC isolated
      0-5 VDC,

   c. Field selectable output spans from 2-14 pH in 2 pH increments,

   d. Alarm contacts; both dry contact and triac,

   e. One manufacturer includes self-diagnosis for both electrodes and signal conditioner. A failure alarm contact output is enclosed,

   f. Integrated process controller.

E. Installation

1. Where pH is one parameter of a sample system.

   The best installation of a pH meter, where pH control is not the objective of the measurements, is as part of a sample system along with other on-line analytical instruments. This locates the pH meter with other high maintenance instruments for ease of service. Buffer solutions needed for standardization can be conveniently stored with other analytical instrument reagents.

   Use flow-through pH sensors in sample system installations. Provide bypass and shutoff valves for instrument removal and service. Select sensors with electrodes that are easily removed from the flow-through housing for cleaning and replacement. The flow-through sensor should be designed so that electrode tips are flush with the tube wall and do not obstruct flow. Locate the pH analyzer near the probe mounting assembly for easy standardization. Provide work surface for setting containers of buffer solution during standardization. Install a sample valve next to the sensor to collect a sample for conformance checks. Figure 1.11 shows sample system installation.

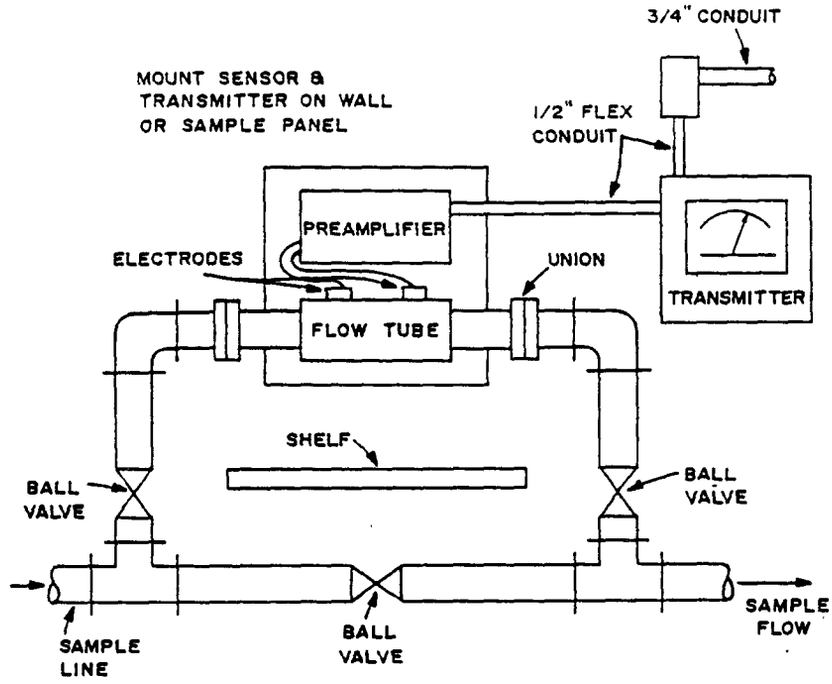

Figure 1.11. Flow-through pH sensor installation.

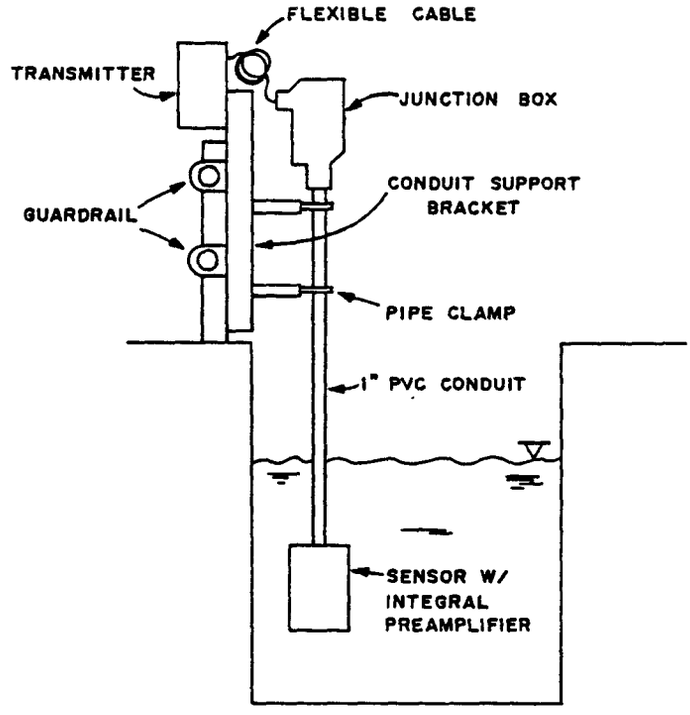

Figure 1.12. Submersion pH sensor installation.

2. Submersion in open tanks and channels.

For in-tank and open-channel installations, use a submersion type electrode assembly with an integral preamplifier. Figure 1.12 shows a typical installation. The electrode assembly is attached to a pvc pipe with a bracket normally mounted on a guardrail. Design the bracket so that the pipe and electrode assembly can be removed for maintenance without the use of tools. Secure all fastening devices to prevent dropping them in the tank or channel. Mount the signal conditioner/transmitter next to the electrode assembly mounting bracket. Provide enough spare cable to allow the sensor/pipe assembly to be lifted clear of the tank.

Install a submersion probe in a well mixed zone at a point that will provide a representative sample of the process. If the probe is installed in an open channel, locate it in a free flowing zone. Design the electrode assembly and support pipe installation to discourage collection of debris.

F. Designer's Checklist

1. What are the process fluid temperature and pressure? Can the selected probe and probe assembly handle the expected range?

2. All are wetted parts of corrosion resistant material?

3. Can the electrode assembly and the electrodes be removed easily for maintenance?

4. Is the measuring system installation designed to allow maintenance and calibration by one person?

5. Are the electrodes exposed to a representative sample of the process fluid?

6. Is the electrode assembly securely mounted?

7. Is there potential for debris to hang up on the electrode assembly?

8. Is the process fluid likely to coat the electrodes?

G. Maintenance and Calibration

Task	Frequency
1. Clean electrodes.	Depends upon process fluid. Once per month for plant effluent. Once per week for plant influent and sludges.

Task	Frequency
2. Add reference electrode fill fluid	Check weekly. Add as necessary. (Free - flowing type electrode)
3. Replace reference electrode	As dictated by operating experience. (Non flowing gel type electrode)
4. Standardization.	Check once per week after initial installation. Reduce to once per month if justified by experience.
5. Transmitter calibration.	Check once per 6 months.

H. Deficiencies

The following problems are commonly reported for pH meters:

1. Electrodes become coated with grease or sludge. Mechanical wipers have demonstrated some success in sewage treatment applications. Ultrasonic cleaners do not work on soft coatings like grease, oil, and sludges. The best solution to coating is periodic cleaning by trained personnel.

2. Plugging of reference electrode. Switch to a double junction reference electrode when plugging is a problem.

3. No provision for easy removal of probes for cleaning or replacement. Probes should be removable without shutting down process piping.

4. The pH meter can't be easily calibrated or standardized because the transmitter/indicator is too far away from the probe.

I. References

1. Liptak, B. G. and K. Venczel. Instrument Engineers Handbook of Process Measurement. Chilton Book Company, Radnor, Pennsylvania, 1969, Rev. 1982.

2. Consdidine, D. M. ed. Process Instruments and Controls Handbook. McGraw Hill, New York, 1974.

3. Krigman, A. Guide to Selecting pH and ORP Instrumentation. InTech, August, 1982, p. 31.

1.4 SUSPENDED SOLIDS

A. Application

Suspended solids analyzers are used in wastewater treatment plants to continuously measure the concentration of solids in various process streams. Concentrations of interest range from effluent quality, 10-30 mg/l, to thickened sludge of several percent solids. A variety of instruments are commercially available to accommodate this wide spectrum of concentrations. This section of the handbook will review light emitting and nuclear type solids analyzers.

TABLE 1.3. SUSPENDED SOLIDS APPLICATION GUIDELINES

Optical Analyzers

Recommended	Not Recommended
Solids concentrations from 20 mg/l - 8%	Primary solids
Return activated sludge	Flotation thickened sludge
Waste activated sludge	Solids concentration greater than 8%
Mixed liquor	
Plant effluent	
Gravity thickened sludge	
Centrifuge supernatant	

Nuclear Analyzers

Recommended	Not Recommended
Thickened sludge with concentrations greater than 8%	Streams with solids concentrations less than 15%
Centrifuged sludge	Streams with entrained air bubbles
	Line sizes larger than 35 cm (14 in.)
	Line size smaller than 15 cm (5 in.)

Ultra-sonic Analyzers

	Recommended	Not Recommended
(Note 1)	Solids concentration from 1-8% solids Primary sludge Waste activated sludge Return activated sludge Gravity thickened sludge	Mixed liquor Secondary effluent Plant effluent Pipe sizes greater than 30 cm (12 in.) Pipe sizes less than 10 cm (4 in.)

Notes:

1. Ultrasonic analyzers are not described in this section but they are commercially available for measuring suspended solids.

B. Principle of Operation

Commonly used suspended solids instruments are based on the attentuation or scattering of a beam of radiation. The type of beam used can be light, ultrasound or nuclear. This section will address those instruments which use light or nuclear radiation.

1. Optical technique.

Optical techniques for measuring suspended solids are based on scattering of a beam of light by the suspended particles (see Figure 1.13). The portion of the light scattered is a function of the number and size of particles. Light transmitted through the stream is reduced in proportion to the light that is scattered; therefore, an instrument which can measure the scattered light, transmitted light or both, provides a measure of the suspended solids present.

The optical type of suspended solids analyzer consists of a lamp which acts as a source of light and a photocell which measures the transmitted or scattered light (see Figure 1.14). Arrangement of the lamps and photocells depends on the manufacturer. An electronic package analyzes the received light and correlates this to the suspended solids in the sampled stream.

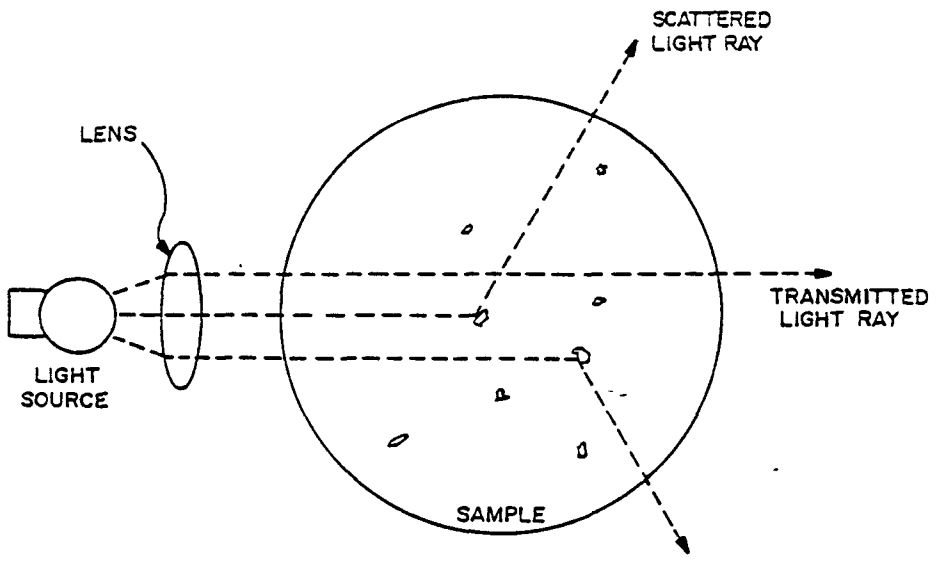

Figure 1.13. Light scattering.

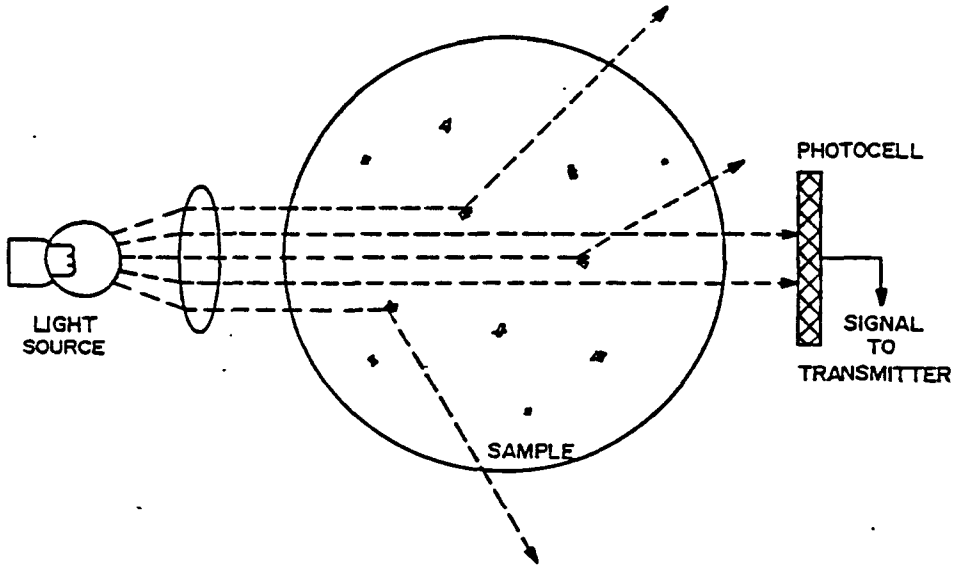

Figure 1.14. Transmissive type optical suspended solids analyzer.

Since solids buildup and coating is a problem in wastewater plants, manufacturers have devised several different methods to minimize or eliminate the effects of solids buildup. One technique uses a small sample chamber in which a piston draws and dispels a sample. The piston is designed with a flexible edge that mechanically cleans the glass which separates the lamp and photocell from the sample. Another design uses multiple lamps and photocells. By measuring the transmitted light at different angles to the lamp, comparisons can be made to null the effect of solids buildup. Still another design measures the light reflected at an angle to a falling stream, because the sample does not contact the lens, solids buildup does not occur.

2. Nuclear radiation.

A nuclear density gauge is a non-contact measurement of solids density. It does not measure percent solids directly. But rather it measures the specific gravity of the material. If the specific gravity of the liquid and solids is constant, then a correlation can be made between measured specific gravity and percent solids concentration.

In operation, a radioactive source emits gamma rays which are absorbed by material in the measured stream. High density materials absorb more radiation than low density materials. Thus a nuclear gauge averages the density of all material in the stream. The detector senses the total radiation passing through the stream to determine the material density. Figure 1.15 shows a solids analyzer.

3. Turbidity.

Turbidity can be classified as forward scatter or side scatter measurement types. In forward scatter turbidimeters, the measurement is in Jackson Turbidity Units (JTU). The JTU unit was derived from the Jackson candle turbidimeter shown in Figure 1.16. In this instrument, the sample is poured into the glass tube until the candle flame is seen to disappear, leaving a uniform field of light. At this transition point, the height of the column is read and converted into JTU's from a standard table.

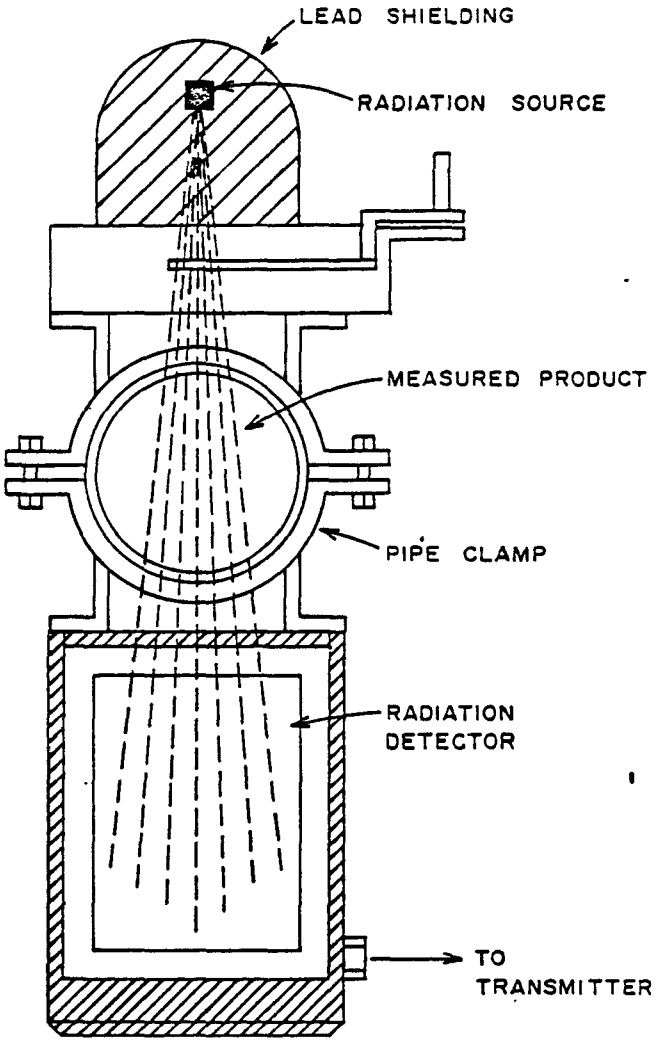

Figure 1.15. Nuclear solids analyzer.

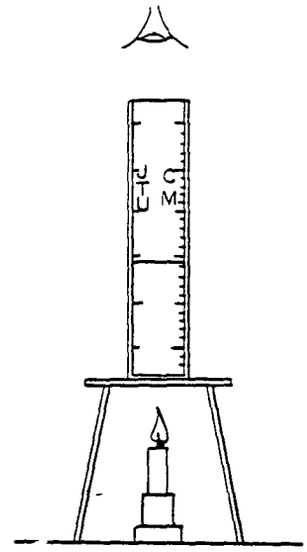

Figure 1.16. Jackson candle turbidimeter.

Figure 1.17 shows a forward scattering type turbidimeter. This instrument measures the amount of light scattered by particles in the forward direction from the light beam. By establishing and maintaining a ratio of scattered light to the transmitted light, the effects of color changes can be eliminated and a direct measurement made of the particulates.

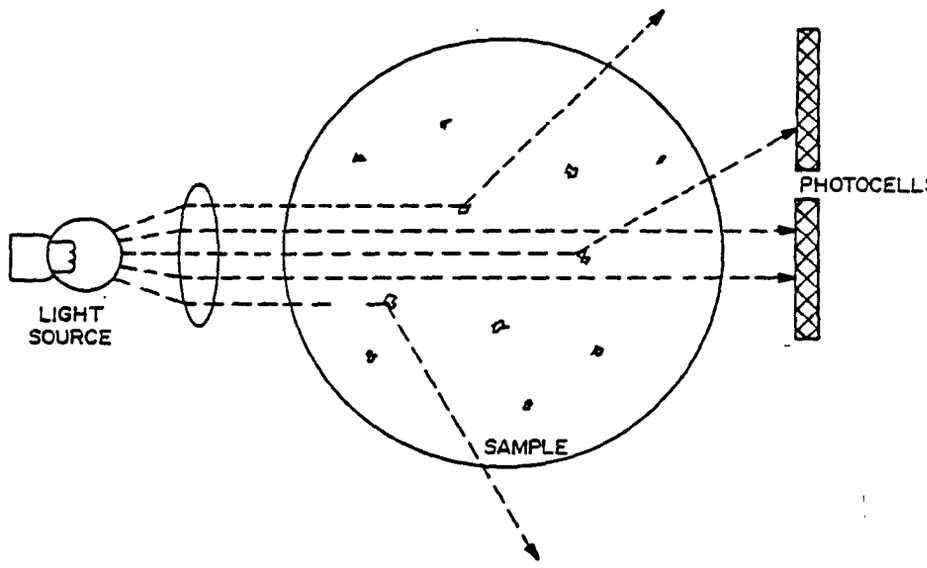

Figure 1.17. Forward scatter turbidimeter.

In side scatter turbidimeters, the turbidity is determined by measuring the amount of light scattered at some angle (usually 90°) from the light path by particles suspended in the sample. Figure 1.18 illustrates two styles of turbidimeters which use the side scatter method of measurement.

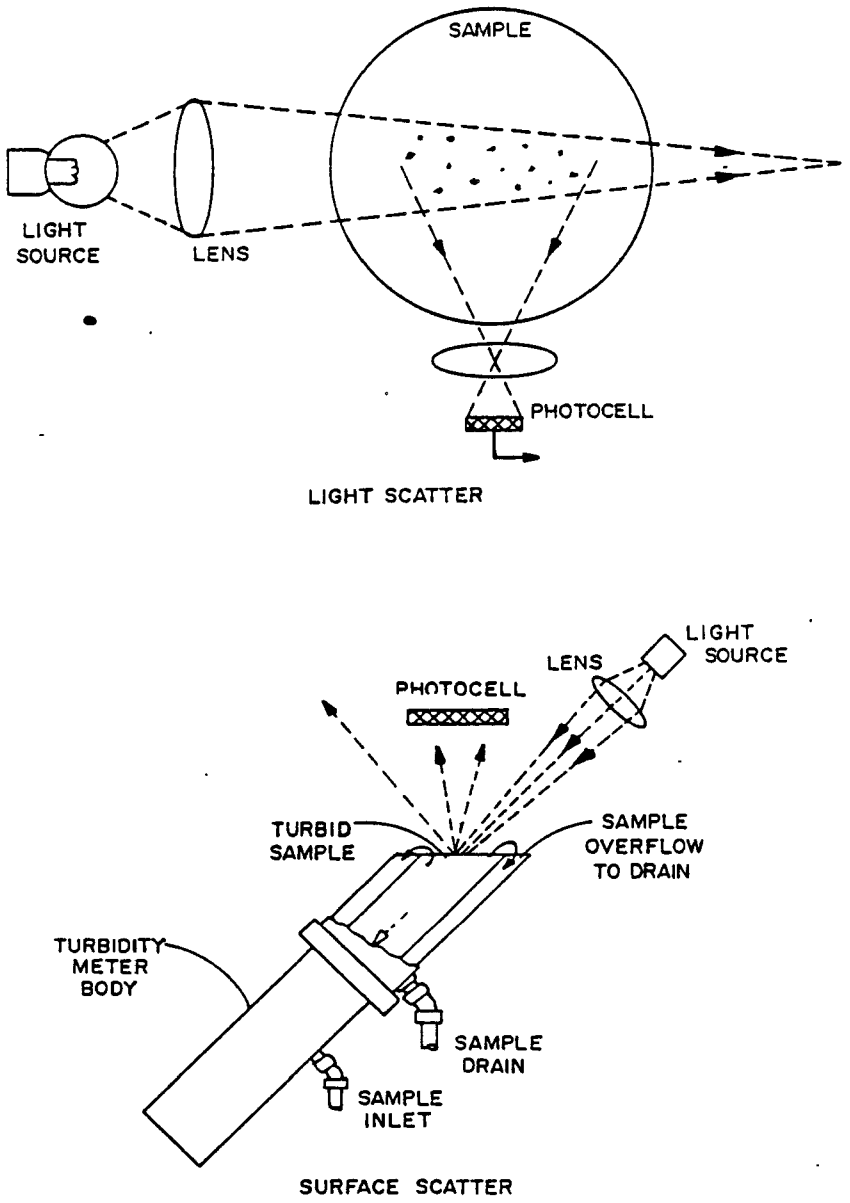

Figure 1.18. Side scatter turbidimeters.

The units for side scatter turbidimeters are Nephelometric Turbidity Units (NTU). The word "nephelometric" describes the optical technique of measuring scattered light at an angle to the light path.

Formazin polymer has gained acceptance as the turbidity reference suspension standard. It is easy to prepare and is reproducible in its light scattering properties. Although a sample of formazin suspension measured by forward scatter (JTU's) and side scatter (NTU's) turbidimeters will read approximately the same, they are not identical. A poor correlation exists when measuring a wastewater sample because of the variation in the absorption and optical scattering properties of the suspended particles. Because of this, turbidity units are not interchangeable between different types of turbidity meters. JTU or NTU can be correlated to suspended solids for a specific application.

C. Accuracy and Repeatability

1. Optical solids analyzers.

The accuracy of a suspended solids analyzer is typically ±5% of full scale. Several ranges of operation are available. On a range of 0-3000 mg/l, the instrument error is ±150 mg/l of the actual reading. For a 0-10% range the error would be ±0.5%.

The repeatability is not readily available from the manufacturer's literature. However ±1% of full scale is a reasonable estimate of the repeatability.

2. Nuclear solids analyzers.

Nuclear gauges offer accuracy of ±0.05% of full scale. However, since the instrument measures specific gravity and is empirically calibrated to read out in percent solids the accuracy of solids measurement can be affected by changes in the specific gravity of the particulate or the fluid.

3. Turbidity analyzers.

Turbidity is a relative measurement. For this reason it is inappropriate to apply conventional standards of accuracy to this measurement. For purposes of this discussion, consider turbidimeter accuracy, ±5% of full scale and repeatability ±2% of full scale.

D. Manufacturer's Options

Some options are common to all types of solids analyzers. These common options are listed first followed by options which apply to a specific analyzer type.

1. Common options.

   a. Low and high alarm contact outputs.

   b. Voltage or current output signals for remote monitoring. This is a standard offering on some analyzers.

   c. Wall or panel mounting for the transmitter enclosure.

   d. Length of interconnecting cable between the sensor and transmitter.

2. Optical analyzers.

   a. Light shields to prevent stray light from introducing measurement errors.

   b. In-line pipe mounting adapters.

   c. Mounting brackets for installing on hand rails.

   d. Length or style (depends on manufacturer) of the sensor probe.

   e. Test standards for troubleshooting and calibration of transmitter electronics.

3. Nuclear analyzers.

   a. Mass flow computer (requires flowmeter input).

   b. Pipe spool pieces with cleanout ports.

   c. Radiation source decay compensation.

   d. Automatic temperature compensation.

4. Turbidity analyzers.

   a. Sample system accessories such as pumps and bubble traps.

   b. Installation kits.

   c. Extended high ranges.

   d. Test standards for calibration.

E. Installation

Installation details for solids analyzers are unique to each manufacturer. The variations of installation are too numerous to list here. Manufacturers installation manuals should be obtained and used when designing for a solids analyzer installation. Some general considerations for installing solids analyzers follow:

1. Solids analyzers require frequent attention and calibration checks. Provide space for servicing and locate the sensor so it can be easily reached.

2. If sample lines are required, make sure they are large enough and that flow velocity is high enough to minimize line plugging.

3. Provide flushing water for the instrument and sample valve.

4. Provide a sample valve next to the sensor so samples can be taken to check analyzer calibration.

5. Mount the transmitter within sight of the sensor.

6. Locate sensors or sample line taps where air bubbles are least likely to be present. Preferably a vertical line with an up-flow.

F. Designer's Checklist

The designer is referred to the manufacturer's installation instructions or operation and maintenance manuals for details of analyzer installation. Also review the general installation suggestions contained in Part E of this section. Caution: the performance of solids analyzers is directly related to ease of maintenance and calibration.

G. Maintenance and Calibration

Refer to the manufacturer's operation and maintenance manuals for specific recommendations on frequency of tasks. The following are general maintenance considerations for all suspended solids and turbidity analyzers.

Task	Frequency
1. Check analyzer calibration.	Weekly.
2. If sample line is used, check sample and drain flows.	Daily.

Task	Frequency
3. If sample line is used, backflush sample line.	Weekly.
4. Calibrate analyzer with a solution of known solids concentration.	When need is indicated by a conformance check.

H. Deficiencies

Some problems encountered in existing solids analyzer installations are described below.

1. The solids analyzer or the sample line tap is not located where there is a well mixed representative process sample.

   a. Air bubbles in the sample.

2. No provision for taking a sample at the analyzer for calibration checks.

3. Locating the sensor and/or transmitter so servicing and maintenance are difficult due to inaccessibility.

4. Analyzer operating range does not match the range of solids in the process.

5. For optical and turbidity analyzers, stray light causes erroneous readings.

I. References

1. Standard Methods for the Examination of Water and Wastewater. American Public Health Association, American Water Works Association, Water Pollution Control Federation, Washington, DC, 1975, 14th edition.

2. Condrashoff, G. Wastewater In-Line Turbidity and Suspended Solids Measurements. Monitor Technology, Inc., Redwood City, CA.

3. Simms, R. J. A Return to Accurate Turbidity Measurement. Monitor Technology, Inc., Redwood City, CA.

4. Liptak, B. G. and K. Venczel. Instrument Engineers Handbook of Process Measurement, Chilton Book Company, Radnor, PA, 1969, Revised, 1982.

2.0 FLOW MEASUREMENT, CLOSED CONDUIT LIQUID FLOW

2.1 MAGNETIC FLOW METERS

A. Applications

1. Operating conditions where magnetic flow meters (mag meters) are suitable include:

   a. Streams in which head losses must be minimized.

   b. Liquids with a conductivity greater than 5 micro-mhos per centimeter.

   c. Corrosive and/or abrasive process streams.

   d. Liquid streams with a solids concentration less than 10% by weight.

2. Mag meters are not recommended for the following applications:

   a. Non-conducting liquid process streams.

   b. Gas streams.

   c. Streams with powdered or granular dry chemicals.

   d. Liquid streams with a solids concentration greater than 10% by weight.

TABLE 2.1. TYPICAL APPLICATIONS FOR MAG METERS IN WASTEWATER TREATMENT

Service	Liner Material	Gasket Material
Raw Sewage	Polyurethane	Asbestos, Rubber, Neoprene
Settled Sewage	Polyurethane	Asbestos, Rubber, Neoprene
Primary Sludge	Polyurethane or Teflon	Teflon/Asbestos
Mixed Liquor	Polyurethane	Asbestos, Rubber, Neoprene
Return Activated Sludge	Polyurethane	Asbestos, Rubber, Neoprene
Waste Activated Sludge	Polyurethane	Asbestos, Rubber, Neoprene
Thickened Sludge	Polyurethane or Teflon	Teflon/Asbestos
Digester Sludge	Polyurethane or Teflon	Teflon/Asbestos
Digester Supernatant	Polyurethane or Teflon	Teflon/Asbestos
Polymer Solutions	Teflon, Rubber,	Teflon/Asbestos,
Polyurethane	Rubber	
Clean (Process) Water	Polyurethane, Rubber	Rubber, Neoprene
Strongly Corrosive	Teflon or Kynar	Teflon/Asbestos

TABLE 2.2. LINER SELECTION CRITERIA FOR SPECIFIC CONDITIONS

Liner Material	Resistance to Abrasion (Mild)	Resistance to Abrasion (Severe)	Resistance to Corrosion	Maximum Temperature
Teflon	Good	Not Recom.	Excellent	150°C (300°F)
Kynar	Good	Not Recom.	Excellent	100°C (212°F)
Polyurethane	Excellent	Excellent	Not Recommended	88°C (190°F)
Butyl rubber	Excellent	Good	Not Recommended	71°C (160°F)
Neoprene	Excellent	Good	Not Recommended	93°C (200°F)

4. Cost considerations regarding liner materials.

   If a base price is assumed for a polyurethane liner, the following costs may be used for comparison:

   a. Rubber or neoprene costs will be approximately $5.90/cm ($15.00/in) of meter diameter, greater than an equivalent meter with a polyurethane liner.

   b. Teflon costs will be approximately $87.00/cm ($220.00/in) of meter diameter, greater than an equivalent meter with a polyurethane liner.

B. Principle of Operation

Magnetic flow meters (mag meters) operate by using Faraday's principle of electro-magnetic induction in which the induced voltage generated by an electrical conductor moving through a magnetic field is proportional to the conductor's velocity. Figures 2.1 and 2.2 illustrate the application of this principle to volumetric flow rate measurements of wastewater treatment process streams.

Commercial power is applied to the meter, and the coil driver energizes the magnetic coils which encase the spool pipe, creating a magnetic field. If the process liquid has enough conductivity, it will act as an electrical conductor and will induce an electrical voltage. This voltage is a summation of all the incremental voltages developed within each liquid particle occupying the magnetic field and is proportional to the field strength, pipe diameter, and "conductor velocity." The more rapid the rate of liquid flow, the greater the instantaneous value of electrode voltage.

The induced voltage is received by the two electrodes mounted 180° apart in the meter. This signal is sent to the converter/transmitter where it is summed, referenced, and converted from a magnetically induced voltage to the appropriate scaled output. The output signal then goes to any of the appropriate operating interfaces, e.g., a control panel indicating meter, a control system computer, etc.

Two basic types of mag meters are available, the AC mag meter and the dc mag meter. With the AC mag, line voltage is applied to the coils and a continuous flux is created producing a continuous low level AC electrode voltage. With the dc mag meter, the magnetic coils are periodically energized, thereby producing two induced electrode voltages -- one when energized, the other when de-energized. The energized electrode voltage is a combination of both true signal and noise, while the de-energized electrode voltage represents only noise. The difference between the two voltages is measured yielding a "clean" signal. Because of this operating scheme, the pulsed dc mag meters are zeroed every cycle whereas AC meters require stopping the flow for periodic re-zeroing.

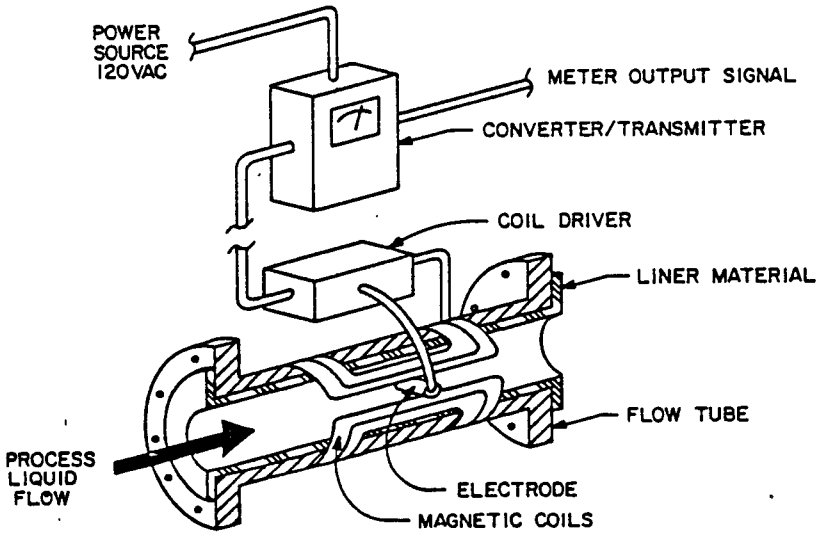

Figure 2.1. Magnetic flow meter construction.

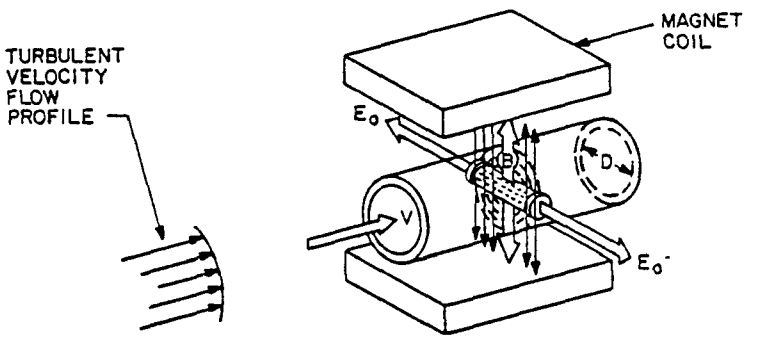

OUTPUT VOLTAGE = E_o = KBDV x 10^{-4} VOLTS
WHERE K = COEFFICIENT TO ACCOUNT FOR NON-IDEALITY
B = MAGNETIC FLUX DENSITY, TELSA
D = PIPE DIA. (DISTANCE BETWEEN ELECTRODES), METERS
V = AREA - AVERAGE VELOCITY OF FLOW, M/S

Figure 2.2. Magmeter induced voltage.

C. Accuracy and Repeatability

The accuracy of a magnetic flow meter should be within ±1.0% of full scale and should not exceed ±3.0% of indicated flow when operating in the lower one-third of the meter range.

The repeatability should be within ±0.5% of full scale.

The above accuracies reflect the expected performance under typical field conditions. These meters are capable of improved performance under ideal conditions.

These requirements can be met by the inherent characteristics of present-day mag meter design; however, several circumstances will degrade these levels of operation, including:

1. Flow conditions.

   Flow-disturbing piping obstructions located too near the meter inlet and outlet may add an additional 1 - 10% of uncertainty to the measured flow. Avoid locating the following obstructions nearer than five pipe diameters to the meter inlet or outlet:

   a. Valves,

   b. Gates,

c. Tees,

d. Elbows,

e. Pumps, and

f. Severe reducers and expanders (30° included angle).

Refer to Part E, Installation, for detail.

2. Meter orientation.

Meter orientation leading to a non-full meter pipe (i.e., trapped gases) or resulting in material buildup on the electrodes severely degrades accuracy. Refer to Part E, Installation, for detail.

D. Manufacturer's Options

1. Electrodes.

a. Shape (see Figure 2.3).

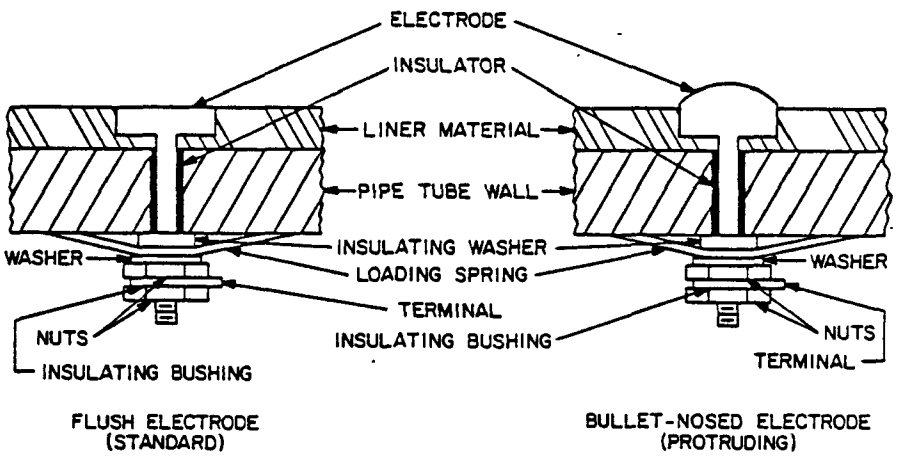

Figure 2.3. Mag meter electrode shape options.

b. Materials:

1) 316 Stainless steel,

2) Platinum/iridium,

3) Tantalum,

4) Hastelloy, and

5) Nickel.

c. Self-cleaning.

1) High frequency ultrasonic (continuous or portable).

2) Heat.

d. Field replaceable.

1) Available with self-sealing liners only, e.g., neoprene or rubber (not available for Teflon-lined meters).

2. Liner material.

a. The corrosive and/or abrasive characteristics of the process liquid dictate proper selection of the liner material and electrode construction (see Tables 2.1 and 2.2).

3. Mag/flow converter.

a. Auto zero calibration.

b. Output signal: 4-20 mAdc, digital pulse, scaled digital pulse.

c. Face-mounted indicating meter.

4. Grounding rings, straps, probes.

5. Environment.

a. Corrosive resistant epoxy paint.

b. Protected from accidental or continuous submergence, NEMA 6 - submersible, watertight.

E. Installation

1. Locate the meter on the discharge side of pumps and on the upstream side of throttling valves.

2. Locate the meter in a straight run of pipe free of valves or fittings with a minimum of five diameters upstream and downstream length.

3. The process conduit must flow full of liquid.

4. Meter sizing is critical. Size the meter to provide a fluid velocity within the following ranges:

   a. Non solids-bearing liquids: 1-9 m/s (3-30 ft/s).

   b. Solids-bearing liquids: 1.0 - 7.5 m/s (3.0 - 25.0 ft/s

   c. Abrasive solids-bearing liquids: 1.0 - 2.0 m/s
      3.0 to 6.0 ft/s

   Appropriate reducers/expanders may be required to achieve recommended operating velocities.

   Use the flow that will exist at startup for meter sizing. DO NOT USE 20 YEAR FLOW ESTIMATES FOR METER SIZING.

5. The meter must have self-cleaning electrodes, ultrasonic or heated, for all applications except where process water is equivalent to or better than secondary effluent quality.

6. Install the mag meter so it can be taken out of service for calibration and/or maintenance without disrupting the associated process. Recommended isolation and bypass piping configurations are shown in Figure 2.4.

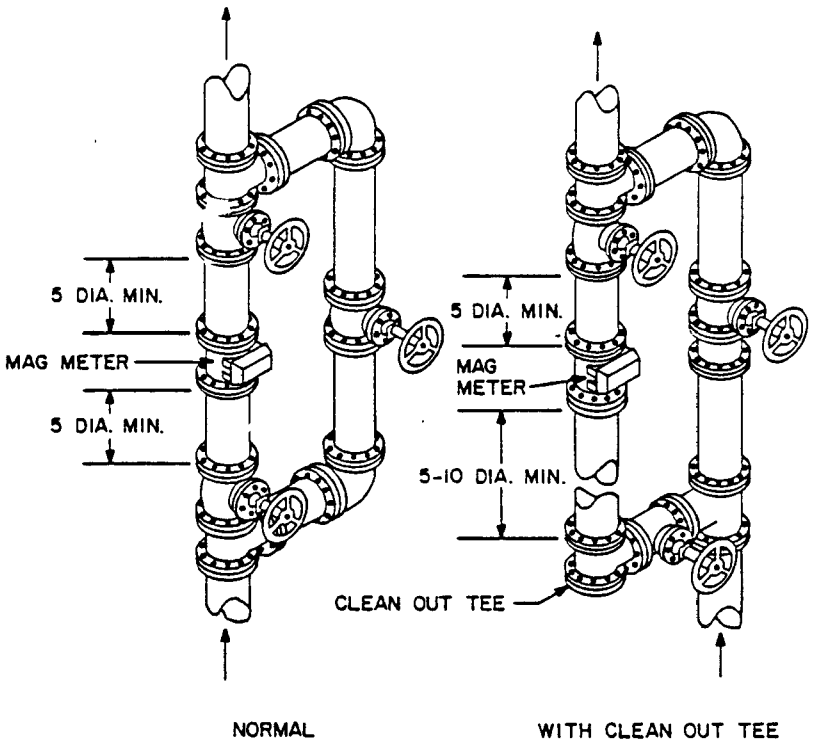

Figure 2.4. Bypass pipe installation.

When the meter is to measure process liquids containing solids, e.g., primary sludge, RAS, WAS, thickened sludge, or when continuous electrode cleaning is not used, install a cleanout tee as shown in Figure 2.4.

The decision to install bypass piping is a value judgment involving consideration of many factors including:

a. Pipe size,

b. Available space, and

c. The ability to shut down the line while maintaining process operation or shifting to a parallel process unit.

7. Properly ground all mag meters using stainless steel grounding rings and grounding straps supplied by the meter manufacturer. The grounding rings should have an inside diameter one cm (1/4 in) less than that of the meter (for meters 10 cm 4 in in diameter or larger). Place them on both flanges with grounding straps as shown in Figure 2.5.

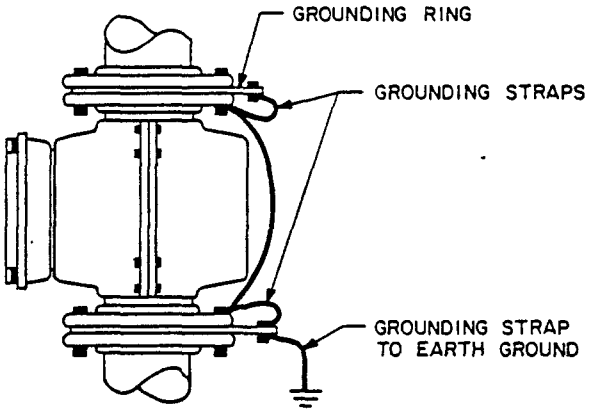

Figure 2.5. Mag meter grounding.

Always ensure that the plant electrical system ground near the meter location provides adequate grounding. If a plant-wide grounding grid is available, ground the meter to it.

8. Additional installation information.

   a. Avoid locating mag meters near heavy induction equipment because it causes meter operational problems (100 HP motors and larger, no closer than 20 feet).

   b. Provide sufficient space to facilitate calibration, in-line maintenance, or meter removal.

   c. Orient the meter so the electrodes lie in a plane parallel to the floor.

   d. Wall-mount the transmitter/converter within sight of the meter in a NEMA 4 enclosure (NEMA 6 if possible submergence), or flush panel mounted so the cable length from the meter does not exceed 60m (200 ft).

e. Use driven-shield signal leads and route them between the transmitter and meter through dedicated 2 cm (3/4 in) conduit. Route power wiring in separate conduit.

f. Torque flange connections to the manufacturer's installation specifications.

g. Wire power to the transmitter/converter and the coil driver through the same dedicated circuit. If separate circuits are used for transmitter/converter power and coil driver power, both circuits must originate from the same phase of the primary power feed.

h. Mount the meter in a vertical pipe run with the flow direction upward. Install air bleed valves for meters mounted horizontally.

i. Metered lines should not self-drain when shut down.

j. Provide for flushing and filling with clean water in sludge applications where intermittent operation is expected.

F. Designer Checklist

Use the following checklist when designing or reviewing mag meter applications. Verify affirmative all checklist items for proper application and installation.

1. Does the process liquid to be measured have a measured conductivity greater than 5 micro-mhos per centimeter?

2. Will the pipe flow full under ALL conditions, excluding shutdown?

3. If intermittent flow is expected, will the meter remain full at no flow? Does the transmitter have low flow zero cut-out circuitry?

4. Does the meter size ensure a flow velocity between 1.5-7.5 m/s (5-25 ft/s) for solids-bearing liquids or 1-9 m/s (3-30 ft/s), for non solids-bearing liquids?

5. Has the proper liner material been selected for the particular application?

6. Do the electrodes require and have continuous cleaning capabilities?

7. Are all piping elements/obstructions located at a minimum distance of five pipe diameters upstream or downstream of the meter?

8. Have grounding rings and straps been provided, and is the meter grounded to a true ground?

9. Have bypass piping and valving been provided?

10. Is signal wiring between the transmitter and meter as specified by the meter manufacturer and routed in separate conduit?

11. Has a dedicated power source been provided for the mag meter?

12. Has the proper electrode material been selected to avoid excessive wear?

13. Is the selected liner material compatible with the expected operating temperature?

14. Does the design provide environmental temperatures within the range specified by the manufacturer for both the meter tube and the transmitter/converter?

G. Acceptance and Performance Monitoring

Include provisions for acceptance testing and performance monitoring as described in Section 7.2, relating to:

a. Hydraulic flow testing,

b. Electrical ground testing, and

c. Verification of manufacturer accuracy and factory calibration documentation.

H. Maintenance and Calibration

	Task	Frequency
1.	Calibrate transmitter.	Once each month.
2.	Flow calibrate the meter.	Every three months.

I. Deficiencies

The following problems are commonly encountered with existing mag meter installations.

1. Velocity skewing created by piping obstructions located too near to the meter cause accuracy problems and liner wear. In severe cases the obstructions cause the liner to be ripped away.

2. Meter sizing does not maintain adequate flow velocities. Often this results from over design for "future" flow rates.

3. Improper installation results in non-full pipe during low flows.

4. Solids coating the electrodes due to lack of automatic electrode cleaning cause low flow velocity and/or intermittent flow.

5. Meter and/or transmitter located so that calibration and maintenance accessibility are difficult.

6. Isolation and bypass piping is not installed, requiring shutting down the process for meter zeroing and meter removal (when required).

7. Infrequent calibration.

8. No provisions are made for meter calibration.

9. Improper grounding.

J. References

1. Liptak, B.G., and K. Venczel. Instrument Engineers Handbook of Process Measurement. Chilton Book Company, Radnor, Pennsylvania, 1969, Revised, 1982.

2. Kulin, G. Recommended Practice For The Use Of Electromagnetic Flow Meters In Wastewater Treatment Plants. EPA 600/2-84-187 U.S. Environmental Protection Agency, Cincinnati, Ohio, November, 1984.

3. Fisher & Porter Company. Instruction Bulletin No. 10D1435A Warminster, Pennsylvania, 1969, Revision 1.

4. Sybron/Taylor Corp. Magnetic Flow Meter - Basic Theory. Product Data, PDS-15E001 Issue 3. Rochester, New York.

5. Sybron/Taylor Corp. Magnetic Flow Meter - Application. Product Data, PDS-15E002 Issue 3. Rochester, New York.

6. Sybron/Taylor Corp. Magnetic Flow Meter - Installation. Product Data, PDS-15E003 Issue 2. Rochester, New York.

2.2 SONIC FLOW METERS

A. Applications

Sonic flow meters are available in two basic types; the transmissive (through beam) type and the reflective (frequency-shift) or Doppler type.

1. Transmissive type.

Application of transmissive type (through-beam) sonic flow meters are indicated where the following conditions exist:

a. Head losses must be minimized.

b. Process pipe flows full.

c. The amount of suspended solids and entrained air bubbles in the process liquid together are "equivalent" to no greater than 3% suspended solids by weight.

d. Process liquid temperatures range between 0°-80° C (32°-180° F).

e. Line size is small enough so the sonic signal attentuation does not cause a problem. Consult meter manufacturer about applications in lines larger than 100 cm (42 in.).

TABLE 2.3. TRANSMISSIVE SONIC FLOW METER APPLICATION GUIDELINES

Recommended	Not Recommended
Primary effluent	Raw sewage
Mixed liquor	Primary sludge
Secondary clarifier effluent	Thickened sludge
Plant final effluent	Nitrification RAS
Process (wash) water	Nitrification WAS
Return activated sludge (RAS)	
Waste activated sludge (WAS)	

2. Reflective type.

Conditions for suitable applications of reflective type (Doppler) sonic flow meters are as follows:

a. Head loss must be minimized.

b. Process pipe flows full.

c. The amount of solids and the entrained air bubbles in the process liquid must be equivalent to a suspended solids concentration greater than 2% but less than 4% by weight.

d. Flow velocities at the transducer must be maintained between 1 - 9 m/s (3 - 30 ft/s).

e. Pipe wall thickness must be less than 5 cm (2 in) thick.

f. The pipe is not constructed of, or lined with, an aggregate material.

g. The thickness of the pipe wall is exactly known.

TABLE 2.4. REFLECTIVE SONIC FLOW METER APPLICATION GUIDELINES

Recommended	Not Recommended
Raw sewage	Secondary clarifier effluent
Primary sludge	Plant final effluent
Thickened sludge	Process (wash) water

3. Varying stream conditions.

A note of caution for the "recommended/not recommended" process applications: Determine the range of conditions under which a sonic flow meter will have to operate; fluctuating flow conditions may cause intermittent operation of the meter.

B. Principle of Operation

1. Transmissive sonic meters.

The transmissive sonic flow meter (also called through beam or time-of-travel meter) measures fluid velocity by measuring the difference in the time required for a sonic pulse to travel a specific distance through the fluid in the same general direction as fluid flow, and the time required for a sonic pulse to travel the same distance in the opposite direction. This meter is available in two types: (1) a pipe section with integral well-mounted transducers and (2) a direct-mounted version with the transducers mounted externally to an existing pipe. Both types use the same operating principle; Figure 2.6 shows the pipe section type.

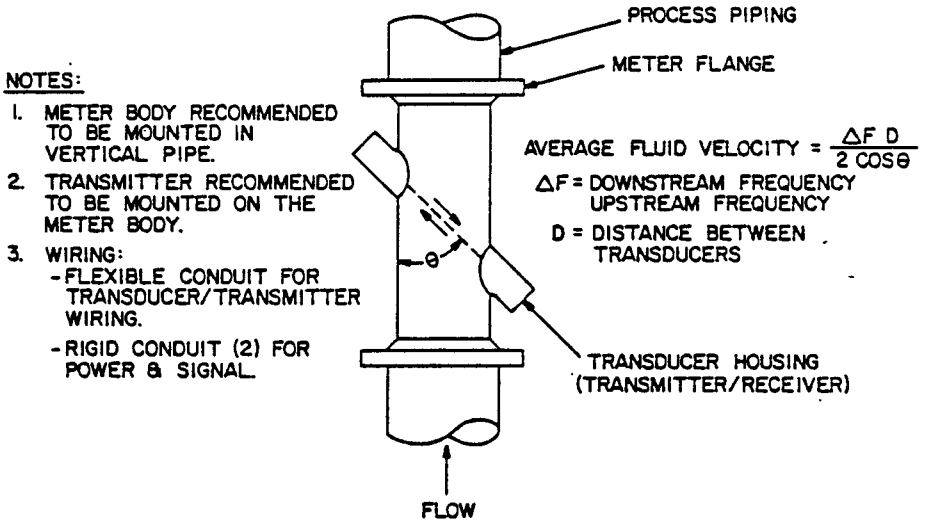

Figure 2.6. Transmissive sonic flow meter.

Sonic transducers are energized alternately by electrical pulses and emit sonic pulses across the flow. The pulse whose directional component is downstream traverses the pipe in a shorter time than the pulse traveling against the flow (upstream). This time difference is proportional to the flow velocity, and an output signal linearly proportional to the flow rate is computed in the meter transmitter.

2. Reflective (Doppler) sonic meters.

Figure 2.7 illustrates that operation of the reflective, or Doppler, sonic flow meter and is based on a principle different from the transmissive type. The single transducer used is mounted on the external wall of the pipe. A signal of known frequency is sent into the fluid where it is reflected back to the transducer by suspended particulates and/or gas bubbles. Because the reflective matter is moving with the process stream, the frequency of the sonic energy waves is shifted as it is reflected. The magnitude of the frequency shift is proportional to the particle (flow) velocity and is converted electronically to the meter output signal linear to flow.

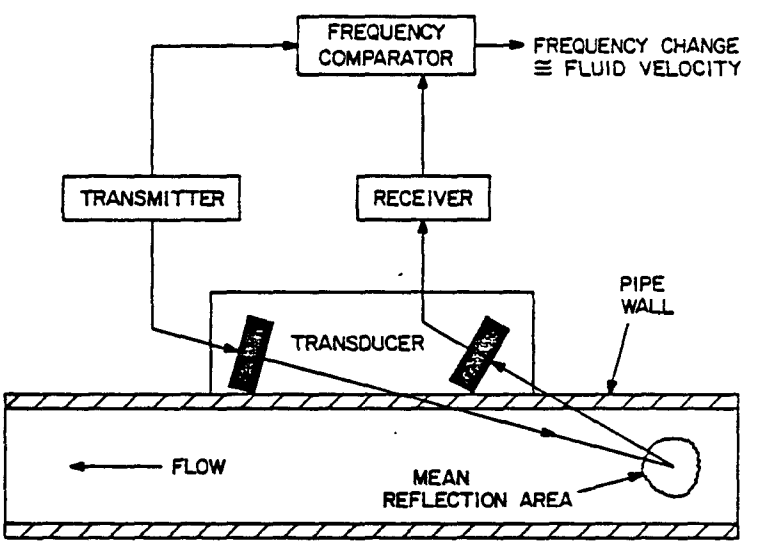

Figure 2.7. Reflective sonic flow meter.

C. Accuracy and Repeatability

The accuracy and repeatability of sonic flow meters vary between the two types; the transmissive type provides a more accurate flow rate signal than does the reflective type. The following limits should be required when considering either type for any of the applications previously listed:

Transmissive: (through beam)	accuracy, ±2% of actual flow repeatability, ±1% of actual flow
Reflective: (Doppler type)	accuracy, ±5% of actual flow repeatability, ±1% of actual flow

Purchase of sonic flow meters which meet these accuracy limits does not assure that the limits will be met in operation. Several factors can degrade accuracy and must be adequately addressed during the design phase. These factors are:

1. Flow conditions.

   Flow-disturbing piping obstructions located too near the meter inlet may add up to 10% of error to the measured flow rate. The following obstructions should not be located nearer than 7 to 10 pipe diameters from the meter inlet, or 5 pipe diameters from the outlet (on flow-tube, transmissive meters) or within these distances from the external transducer of the Doppler type meter.

   a. Valves (modulating and isolating).

   b. Gates.

   c. Elbows and tee's.

   d. Pumps.

   e. Severe reducers and expanders (> 30 degrees included angle).

   Also, skewing of the velocity profile will result if the recommended straight lengths of pipe are not provided upstream and downstream of the meter. Skewing will cause errors in the flow measurement.

   Refer to Part E, Installation, for additional details.

2. Meter orientation.

   Meter orientation leading to a non-full pipe or resulting in material buildup or deposition will severely degrade meter accuracy. Refer to Part E, Installation, for detail.

D. Manufactured Options

1. Transmissive (through beam) - only.

   a. Meter tube construction:

      1) Stainless steel.

      2) Carbon steel.

   b. Meter tube end connections:

      1) 150 lb ANSI RF flange.

      2) 300 lb ANSI RF flange.

      3) Victaulic.

      4) Plain.

   c. Transducer mounting:

      1) Wetted, with flush water port.

      2) Wetted, with epoxy window (Teflon-optional).

      3) Wetted, removable without process disruption.

2. Reflective (Doppler) - only:

   a. Transducer mounting:

      1) External, clamp-on.

      2) Wetted, with flow tube.

3. Common options:

   a. Input power:

      1) 115 VAC, 50-60 Hz.

      2) 220 VAC, 50-60 Hz.

      3) 24 VDC.

   b. Transmitter:

1) Outputs:

a) 4-20 mAdc.

b) 0-10 VDC.

c) Pulse rate.

2) Integral flow rate indicator/totalizer.

3) Adjustable relay contact alarm outputs.

c. Environment:

1) Temperature: -20° to 60° C (-4° to 140° F).

E. Installation

1. Install transmissive sonic flow meters having wetted transducers so the meters can be taken out of service for calibration and/or maintenance without disrupting the associated process. Recommended bypass configurations are the same as those recommended for magnetic flow meters and are shown in Figure 2.4.

   The decision to install bypass piping involves such considerations as pipe size, available space, and the ability to shut down the line while maintaining process operation or shifting to a parallel process unit.

2. Locate meters on the discharge side of pumps and on the upstream side of throttling valves if these devices are near the required meter location.

3. Flow velocities through the meter should be maintained between 1 - 9 m/s (3 - 30 ft/s).

   Appropriate reducers/expanders may be required to achieve recommended operating velocities.

   Use the flow that will exist at start-up for meter sizing. DO NOT USE 20 YEAR FLOW ESTIMATES FOR METER SIZING.

4. Provide straight runs of pipe upstream and downstream of the meter as described in Part C, Accuracy and Repeatability.

5. Orient spool-piece type meters in, or locate clamp-on type meters on, vertical process piping where possible, with flow direction upward only. Install air bleed valves when horizontally mounted.

6. Metered lines should not self-drain when shut down.

7. Locate the meter in an accessible location with sufficient space for calibration, in-line maintenance, or meter removal. Install the transmitter as close as possible (3.7 m, 12 ft) to the clamp-on transducer. When a meter tube is used, mount the transmitter directly on the tube.

8. Install clamp-on transducers according to the manufacturer's suggested procedures. Be sure that no air bubbles are present in the epoxy sealant compound.

9. Use separate conduit to wire line power and signal wiring.

10. Follow precisely the manufacturer's guidelines for aligning sonic transducers to the pipe.

11. Install the transmissive meter as a spool piece for pipes ranging in size from 91 - 7.6 cm (36 - 3 in). For pipes smaller than this, mount the transducers in an axial configuration as shown in Figure 2.8.

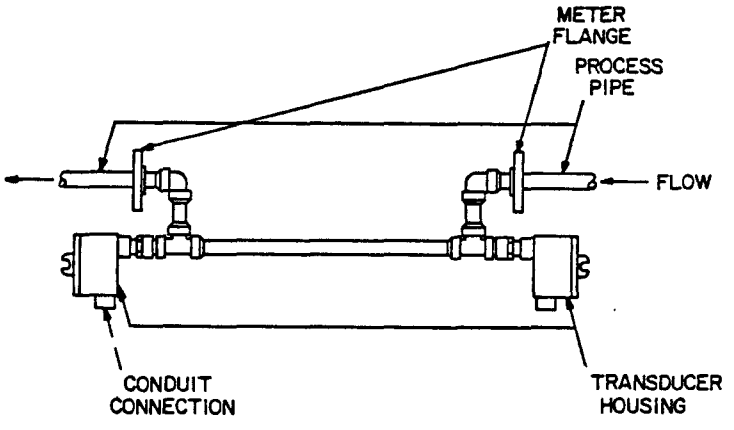

NOTE:
1. METER TUBE SHALL ALWAYS BE MOUNTED IN HORIZONTAL PROCESS PIPE.

Figure 2.8. Transmissive sonic meter, axial configuration.

F. Designer Checklist

Use the following checklist when designing or reviewing sonic flow meter applications. All checklist items should be answered yes for proper application and installation.

1. Common items.

   a. Will the pipe flow full under all conditions?

   b. If intermittent flow is expected, will the pipe remain full at no-flow conditions?

   c. Are all piping elements/obstructions located a minimum distance of 7-10 pipe diameters upstream and 5 diameters downstream?

   d. Are the meter and transmitter easily accessible?

   e. Will adequate flow velocities be realized, 1-9 m/s (3 - 30 ft/s)?

   f. Is the meter located correctly in relation to pumps and throttling valves?

   g. Does the design provide environmental temperatures within the manufacturer's specified range?

   h. Has a sample of the process fluid been tested for sonic transmittance?

2. Transmissive (through beam) items.

   a. Have the proper spool piece material and end connections been provided for?

   b. Is the transmitter mounted on the spool piece?

   c. Is the process liquid recommended in Table 2.3? Is the amount of air bubbles and solids less than 3% by volume?

   d. Is the process liquid temperature between 0°-80° C (3°-180° F)?

3. Reflective (Doppler) items.

   a. Is the process liquid recommended in Table 2.4? Does it have a solids and/or air bubble content greater than 2% but less than 4%?

   b. Is the clamp-on transducer located where no excessive pipe and/or liquid-transmitted vibration will occur?

   c. Is the pipe inside diameter and wall thickness known accurately?

H. Acceptance and Performance Monitoring

Provide for acceptance testing and performance monitoring as described in Section 7.1, relating to:

1. Hydraulic flow testing.

2. Verification of manufacturer accuracy and factory calibration documentation (reflective type meters are rarely factory calibrated).

I. Maintenance and Calibration

The recommended calibration interval for sonic flow meters is every two months.

J. Deficiencies

The following problems are commonly encountered with existing sonic flow meter installations:

1. Piping obstructions located too near to meter causing accuracy problems.

2. Meter sizing is such that adequate flow velocities are not maintained. Many times this results from over design for "future" flow rates.

3. Installation resulting in non-full pipe during low flows.

4. Solids coating due to low flow velocity and/or intermittent flow.

5. Meter and/or transmitter located so that calibration and maintenance accessibility is difficult.

6. Infrequent calibration.

7. No provisions for flow rate testing/calibration.

8. Solids concentration and/or entrained air greater than acceptable for transmissive type, resulting in poor accuracy or an unacceptable signal.

9. Solids concentration and/or entrained air less than required for reflective type, resulting in poor accuracy or an unacceptable signal.

10. Grease and scum buildup on pipe walls and wetted transducers.

K. References

1. Liptak, B. G., and K. Venczel. Instrument Engineers Handbook of Process Measurement, Chilton Book Company, Radnor, Pennsylvania, 1969, Revised, 1982.

2. Brown, A. E. Application of Flowmeters to Water Management Systems. Presented to Instrument Society of America, ISA/81 Conference, Anaheim, CA, (October, 1981).

3. Powell, D. J. Ultrasonic Flowmeters, Basic Design, Operation and Criteria Application. Plant Engineering, May, 1979.

4. Hall, J. Choosing a Flow Monitoring Device. Instruments and Control Systems, June, 1981.

2.3 TURBINE FLOW METERS

A. Application

The following general conditions provide suitable applications for turbine flow meters:

1. The typical head loss through a turbine meter of 21-35 kPa (3-5 psi) can be tolerated.

2. The process piping is full under flowing conditions.

3. The process liquid is relatively "clear," i.e., a solids concentration less than 0.1% by weight (1000 mg/l) and is free of fiberous materials and/or debris.

4. A maximum meter rangeability of 10:1 is acceptable.

5. An intermittent flow may be expected.

TABLE 2.5. TURBINE FLOW METER APPLICATION GUIDELINES

Recommended	Not Recommended
Plant final effluent	Raw sewage
Secondary clarifier effluent	Primary sludge
Process (wash) water	Secondary sludge (RAS & WAS)
Steam condensate	Mixed liquor
	Primary effluent
	Chemical slurries

B. Meter Sizing

Due to the nature of their linear-to-flow relationship, turbine meters must be properly sized by volumetric flow rate. A meter sized to a specified range of linear flow rate measurement should not be used for flow rates outside that range.

Follow these guidelines when sizing a turbine meter:

1. The flow meter should be sized for 120-130% of the maximum expected process flow rate.

2. If the meter is sized by volumetric flow rate (guideline No. 1), it will have a diameter smaller than the process pipe. See Figure 2.10 for reducer/straight pipe installation.

3. If the meter size is the same diameter as the process pipe, its range will be severely reduced (to 2:1 or 3:1); however, the head loss through the meter will be less than if volumetrically sized.

4. Liquid cavitation may occur in the meter if upstream line pressure is not sufficient. To ensure sufficient pressure, the downstream line pressure must be a minimum of 2 times the meter head loss plus 1.25 times the liquid vapor pressure. If this condition cannot be met, a larger size meter with a correspondingly reduced meter range is required.

5. Available turbine meter sizes range from 0.5-60.0 cm (3/16-24 in.) in diameter.

C. Principle of Operation

Turbine flow meters consist of a pipe section with a multi-bladed impeller suspended in the fluid stream on a free running bearing (see Figure 2.9). The direction of rotation of the impeller is perpendicular to the flow direction, and the impeller blades sweep out nearly the full bore of the pipe. The impeller is driven by the process liquid impinging on the blades. Within the linear flow range of the meter, the impeller's angular velocity is directly proportional to the liquid velocity which is, in turn, proportional to the volumetric flow rate. The speed of rotation is monitored by an electromagnetic pickup coil which operates either on a reluctance or inductance principle to produce a pulse. The output signal is a continuous voltage pulse train with each pulse representing a discrete volume of liquid. Associated electronics units then convert and display volumetric flow (flow rate) and/or total accumulated flow.

D. Accuracy and Repeatability

The accuracy and repeatability characteristics of turbine flow meters, when properly applied and installed, should be:

Accuracy:	±0.25% of actual flow, within the linear range of the meter.
Repeatability:	±0.05% of actual flow, within the linear range of the meter.

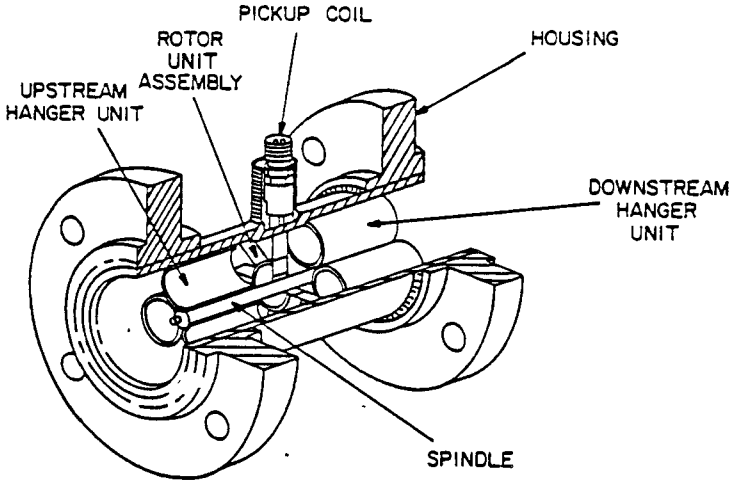

Figure 2.9. Turbine flow meter.

Each turbine flow meter has a unique "K" factor (the number of pulses per unit volume) which is determined during factory calibration. This factor is adversely affected by two conditions:

1. The liquid viscosity is significantly greater than that of clean water. This condition should not occur in wastewater treatment facility applications recommended in Table 2.5.

2. The moving components become impaired by buildup of solids and/or fiberous materials.

E. Manufactured Options

Turbine flow meter options available to the buyer are limited due to meter design standardization. Typically, options are limited to wetted parts materials for additional protection against corrosion and some additional equipment listed below:

1. Wetted parts materials:

   a. Stainless steel (standard).

   b. Hastelloy "C".

   c. P.T.F.E. (bearings).

2. Flow straightening vanes/elements.

3. An additional electromagnetic pickup and associated electronics for increased accuracy.

4. Turbine meters may require additional equipment for secondary readout and/or transmitter devices. These should be purchased from the meter manufacturer. If another supplier is used, take care to ensure that both units are compatible with regard to pulse shape, amplitude, width, and signal frequency.

5. Typical secondary elements may include:

   a. Electromechanical rate indicator and totalizer.

   b. Pulse-to-current transducer.

   c. Signal pulse preamplifier (for long distance pulse signal transmission).

F. Installation

1. Flow-disturbing piping obstructions severely affect turbine meter accuracy. Figure 2.10 shows the recommended installation piping and details, including a flow-straightening element.

2. When a flow-straightening element is used, the flow-disturbing effects of the following obstructions will be adequately damped in a minimum upstream distance of 10 pipe diameters (including the straightener). NOTE: If no flow-straightening element is used, extend this minimum distance to 25 to 30 pipe diameters.

   a. Valves.

   b. Gates.

   c. Tees.

   d. Elbows.

   e. Severe reducers and expanders (30 degrees included angle).

3. Locate piping obstructions no nearer than 5 pipe diameters downstream from the meter.

4. Install the meter in a horizontal pipe run.

5. Install the meter on the discharge side of pumps and on the upstream side of throttling valves.

6. Shield the cable between the turbine meter and electronics; minimize its length, and do not route it through areas of high electrical noise.

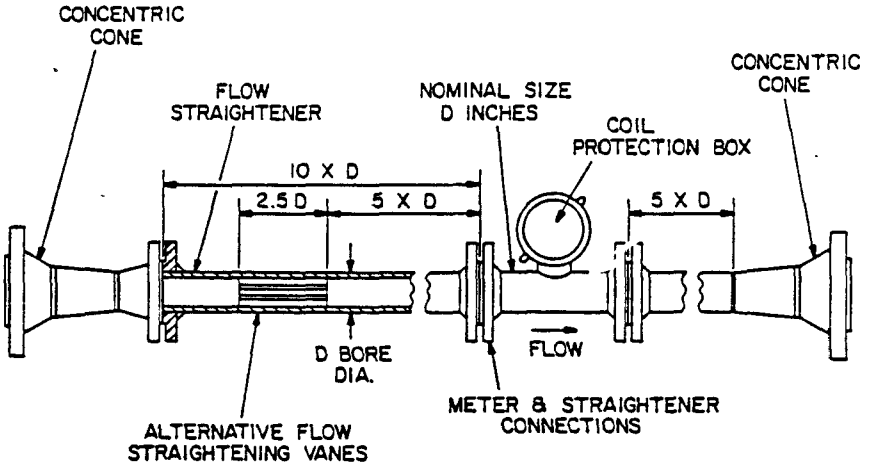

Figure 2.10. Turbine meter mounting.

G. Designer Checklist

Use the following checklist when designing or reviewing turbine flow meter applications. All checklist items should be verified affirmative for proper application and installation.

1. Is the intended process liquid as recommended in Table 2.5?

2. Can the expected head loss be tolerated from a hydraulic standpoint?

3. Is the expected upstream line pressure great enough to prevent cavitation in the meter?

4. If the meter diameter is equal to the process pipe, is an instrument rangeability of 3:1 acceptable?

5. Are all pipe obstructions located at least a distance of 5 pipe diameters downstream and a minimum upstream distance of:

   a. 10 pipe diameters (when a flow straightener is utilized)?

   b. 25-30 pipe diameters (when a flow straightener is not utilized)?

6. Will the turbine meter be full under flowing conditions?

7. Is the process liquid essentially free of solids, fiberous materials, and/or debris?

8. Has the proper secondary flow indication device(s) been provided; has line power been provided, if required, for the device(s)?

9. Is the meter easily accessible for maintenance?

10. Have provisions been made for calibrating the meter?

H. Acceptance and Performance Monitoring

Provide for acceptance testing and performance monitoring as described in Section 7.1, relating to:

1. Hydraulic flow testing.

2. Verification of manufacturer accuracy and factory calibration documentation.

The meter constant "K", in clean water, is determined by the manufacturer prior to meter shipment. If the intended application process liquid has physical characteristics that significantly differ from clean water, consult the manufacturer for additional testing data.

I. Maintenance and Calibration

Turbine meters normally do not require periodic calibration. When meter accuracy becomes questionable (as observed through performance monitoring), examine it to determine maintenance requirements, or if none are required, determine a new "K" factor by hydraulic testing.

J. Deficiencies

The following problems are commonly encountered with existing turbine meter applications:

1. Inadequate upstream and downstream straight run piping, resulting in poor meter accuracy.

2. No flow straightening vanes, resulting in poor accuracy.

3. Meter sized too large, resulting in non-full pipe and/or poor accuracy at low flows.

4. Meter sized correctly, but reducers located too near inlet and outlet.

5. Meter applied to a process liquid with an excessive solids concentration.

K. References

1. Liptak, B. G., and K. Venczel. Instrument Engineers Handbook of Process Measurement, Chilton Book Company, Radnor, Pennsylvania, 1969, Revised, 1982.

2. Foxboro Company. Technical Bulletin No. TI, 16-6a. Foxboro, Massachusetts, January, 1971.

2.4 VENTURI TUBES AND FLOW TUBES

A. Applications

Recommended applications for venturi and proprietary flow tubes as primary elements include nearly all wastewater treatment process streams. The most critical aspect of proper application is the type of pressure sensing system used to measure the differential pressure produced by the primary tube.

Therefore, the recommended applications for these instruments are listed by type of pressure sensing system. The major types of sensing systems (described in Part C) are:

1. Open connection, without flushing (including piezometric rings).

2. Open connection, with flushing (excluding piezometric rings).

3. Diaphragm sealed connections.

TABLE 2.6. VENTURI AND FLOW TUBE APPLICATION GUIDELINES

Recommended Without Flushing	Recommended With Flushing or Diaphragm Seals	Not Recommended
Secondary effluent	Raw sewage	Primary sludge
Final effluent	Primary effluent	Thickened sludge
Process (wash) water	Return activated sludge	Chemical (corrosive) slurries
	Waste activated sludge	
	Mixed liquor	

4. Additional requirements for venturi and flow tube applications are:

   a. The metering tube must flow full.

   b. A maximum to minimum measuring range of 4:1 is acceptable.

   c. The Reynolds number of the process flow at the meter should be greater than 150,000.

Do not use venturi or flow tube meters in line with a positive displacement pump. The resultant flow pulsations will produce excessive signal noise and measurement inaccuracy.

B. Principle of Operation

1. Venturi tube.

A venturi tube operates on the principle that a fluid flowing through a pipe section that contains a constriction of known geometry will cause a pressure drop at the constriction area. The difference in pressure between the inlet and the constriction area (throat) is proportional to the square of the flow rate. Figure 2.11 shows a cut-away of a typical venturi tube.

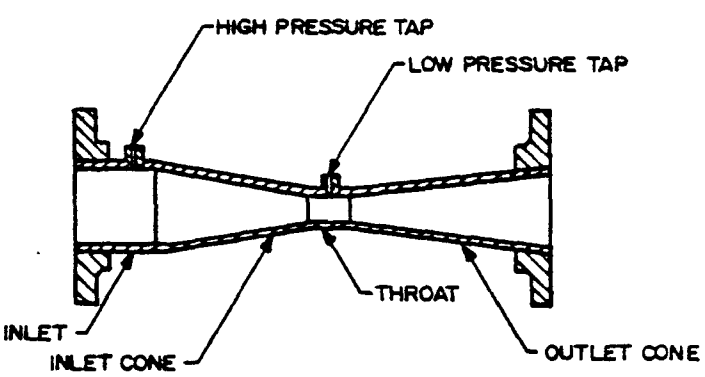

Figure 2.11. Classic venturi tube.

2. General equation.

$$W = 353Yd^2 \sqrt{h\rho/(1-\beta^2)}$$

Where:

d = throat diameter of pipe.
D = pipe inside diameter.
h = differential produced (in inches of water).
Y = net expansion factor.
β = d/D (Beta ratio).
ρ = specific weight.
W = flow rate (pounds/hr).

3. Flow tube.

Several manufacturers provide differential-causing flow tubes which are modified versions of the classical venturi tube. These devices operate on the same principle as the classical venturi; however, they provide features which make them more attractive for some applications, e.g., less space is required for installation, less overall head loss, and lower installed cost. Figure 2.12 shows three commonly used flow tubes.

4. Both the venturi tube and the proprietary flow tubes are primary sensing elements and require a secondary element to measure pressure differential.

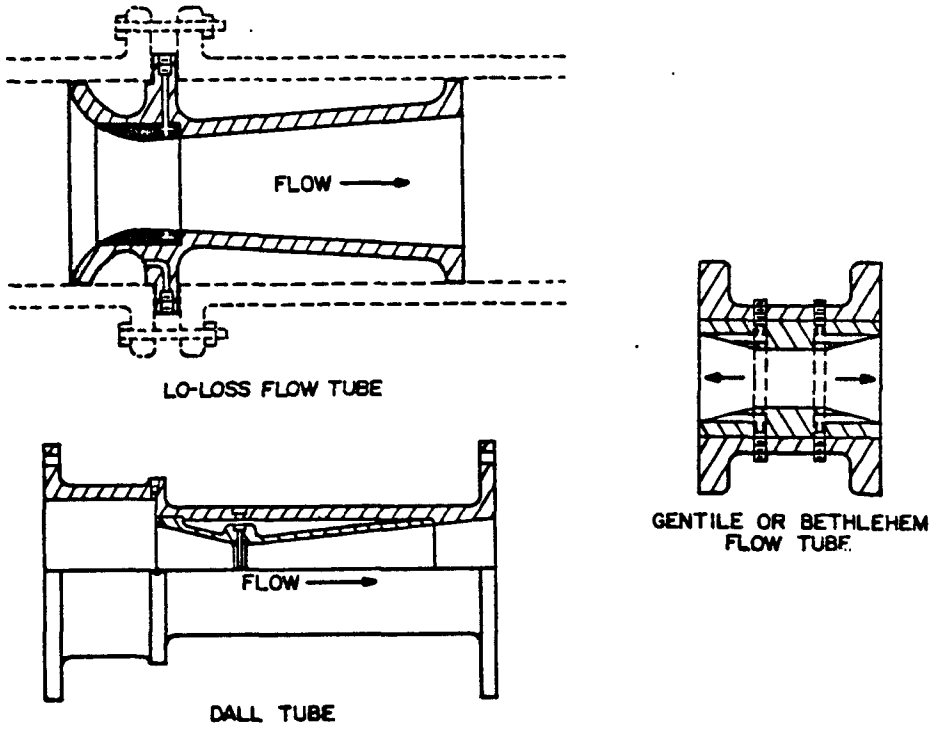

Figure 2.12. Proprietary flow tubes.

C. Pressure Sensing Systems

The differential pressure created by a venturi or flow tube is generally measured by connecting a differential pressure (Δp) transmitter to the sensing taps with pipe or tubing (tap lines). The discussion here focuses on three common Δp transmitter connection methods. Further information regarding the Δp transmitter and tap line runs is presented in Section 6.2 of this handbook.

1. Open connection.

For this method, the venturi tube pressure taps are connected directly to the Δp transmitter and the tap lines are allowed to fill with process liquid. To avoid tap line clogging, do not use this method for liquids with greater than 30 mg/l solids.

Providing a flushing water system for this sensing method allows the measurement of process liquids containing solids which would normally clog the sensing lines. There are two methods of operating flushing water systems. In one, flushing water is applied intermittently to purge solids from the tap line (measurement is interrupted during the purge cycle). In the second, a continuous equal flow of purge water is applied to both taps to act as a barrier to solids. As the purge water back pressure is measured in the latter method, it is critical that purge flows are equal. Direct and flushing water connections are illustrated in Figure 2.13.

2. Piezometric rings.

Piezometric rings may be used to sense inlet and throat pressures. These are normally used in very large diameter tubes where an average pressure is required to compensate for velocity profile variations. The rings consist of several holes for each tap (in a plane perpendicular to flow) connected to an annular ring. They should be used only on clean liquids. Flushing water systems cannot be used because the purge water short circuits within the annular ring to the nearest tap hole.

3. Diaphragm sealed sensors.

The diaphragm sealed sensor method allows solids-bearing liquids to be measured without a tap flushing system. The process liquid is separated from the tap lines and transmitter by a diaphragm.

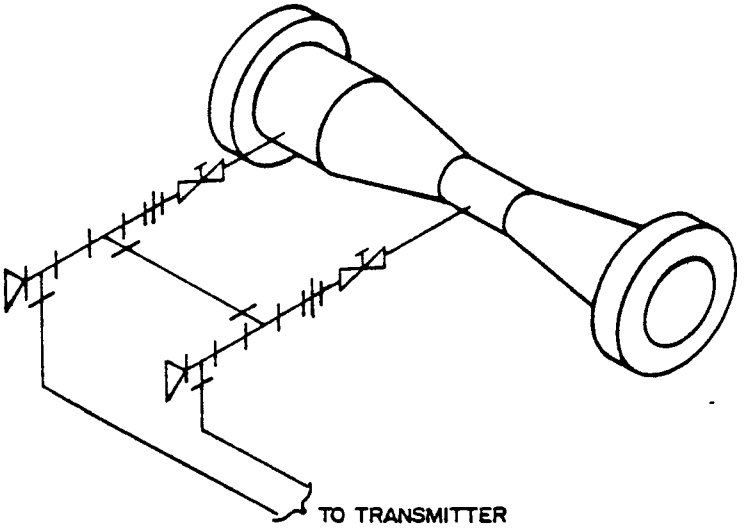

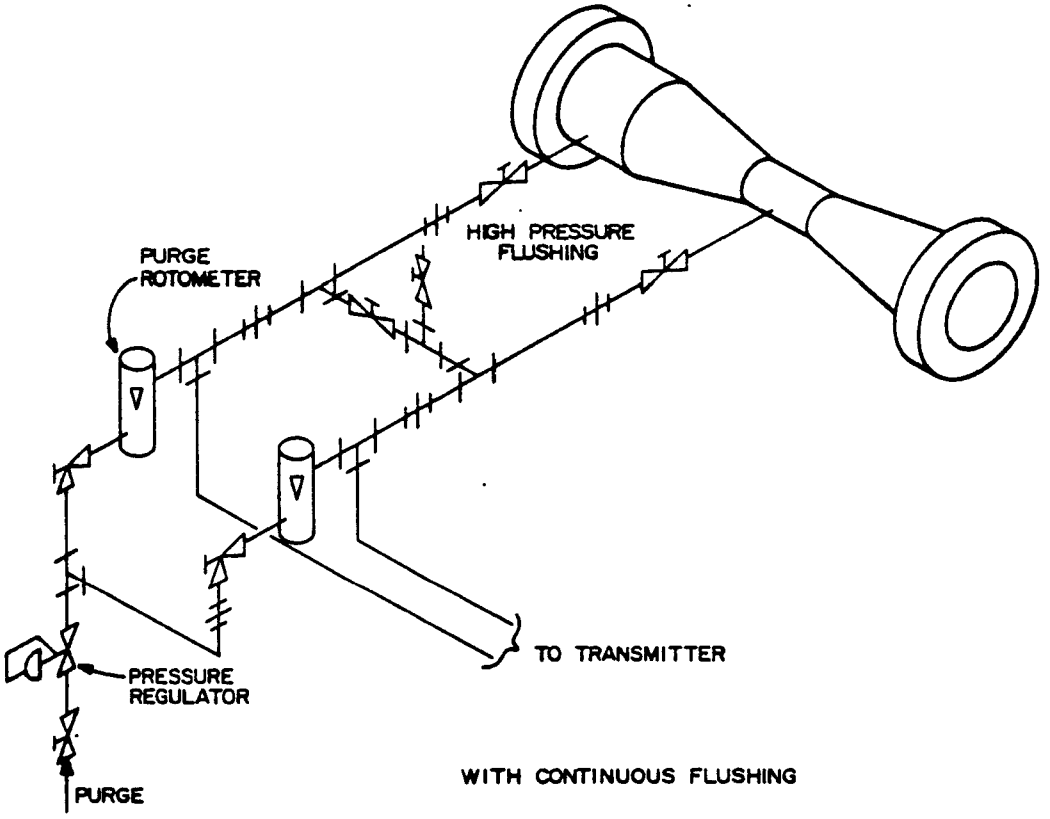

Figure 2.13. Typical differential piping.

D. Accuracy and Repeatability

The accuracy and repeatability of venturi and proprietary flow meters vary. The characteristics of the secondary element (transmitter) must also be included in the total accuracy figure. The following limits are generally attainable for the previously listed applications:

1.	Classical venturi and Δp transmitter	Accuracy, $\pm 1\%$ of actual flow. Repeatability, $\pm 1\%$.
2.	Proprietary flow tubes and Δp transmitter	Accuracy, $\pm 1\%$ - 3% of actual flow. Repeatability, $\pm 1\%$.

These levels of accuracy reflect optimum values achievable for proper application and installation. Factors which degrade these levels include improper tube sizing (Beta ratio to high or low for the expected flow range), and piping elements which disrupt the velocity profile.

E. Manufactured Options

1. Primary meter tube:

   a. Single sensing ports.

   b. Piezometer ring sensing.

   c. Inspection openings.

   d. Manual rodders for cleanout of the sensing ports.

2. Sensing system:

   a. Conventional, or

   b. Diaphragm sealed.

3. Secondary element (transmitter):

   a. Differential pressure transmitter (see Section 6.2).

   b. Manometer transmitter (not recommended).

F. Installation

1. Primary system.

a. Venturi and flow tubes may be installed in any position to suit the requirements of the application and piping as long as the meter flows full.

b. For best accuracy, flow disturbing obstructions (fittings) should not be located too near the meter inlet. The following guidelines indicate the minimum upstream distance of straight pipe recommended between the fitting and the meter inlet:

1)	Reducers	8 diameters of reduced pipe size.
2)	Expanders	4 diameters.
3)	Fully open valve	5 diameters.
4)	Check valve	12 diameters.
5)	Throttled gate or ball valve	20 diameters.
6)	90° bend(s)	4 diameters.

For more information on lengths of straight pipe runs, see References 8, 9 and 10.

c. If a flow control valve is required in the line, it should be placed a minimum of 5 pipe diameters downstream of the meter tube. As seen in 5) above, to place the valve upstream requires a much greater straight run of pipe.

d. Locate all downstream pipe fittings a minimum distance of 4 pipe diameters downstream of the throat tap(s).

e. Place the meter tube a minimum distance of 10 diameters downstream from the pump discharge. The meter tube can be located on the suction side of a centrifugal pump only if subatmospheric pressure can be avoided.

f. Install the primary and secondary flow elements in an accessible location with suitable space for maintenance and calibration.

g. Orient single tap meters (at inlet and throat) in the process piping so that the taps lie in the upper half of the meridian plane.

2. Secondary system.

a. Place the differential pressure transmitter below the hydraulic grade line to facilitate positive gas bleeding.

b. Place an indicator gauge (Δ p) near the primary element for convenience in calibration and performance checking.

The following refer to all installations except those having diaphragm-sealed sensors (see Figure 2.13).

c. If there is a possibility of the tap lines freezing, use insulation and heat tape to wrap them.

d. Install tap line (connecting) tubing so that it has a minimum downward slope from the meter of 1 in 12.

e. Install a bleed valve or gas collector at the highest point in the tap line run.

f. Provide valves to isolate the transmitter for calibration.

g. Provide a flushing water system if the process liquid contains greater than 30 mg/l of solids.

h. Use connecting tubing no smaller than 1 cm (3/8 in) in diameter.

The following refer to installations where continuous flushing is required (see Figure 2.13).

i. The head loss in the tubing between the flushing water connection and the sensor tap should be the same in both lines so the pressure differential is unaffected.

j. The flushing water supply pressure should be at least 70 Kpa (10 psi) higher than process pressure.

k. Equip the flushing water supply line for each tap with a rotameter for visual inspection and adjustment of purge flow.

G. Designer's Checklist

Use the following checklist when designing or reviewing venturi and proprietary flow tube applications. All checklist items should be answered yes for proper application and installation.

1. Is the process liquid recommended in Table 2.6 compatible with the type of meter under consideration?

2. Will the meter tube flow full?

3. Is a maximum to minimum measurement range of 4:1 acceptable?

4. Is the Reynolds number at the meter expected to be 150,000 or greater?

5. Has the meter tube been sized to accommodate the present flow range (bear in mind that meters sized for a 20 year projected flow are typically oversized)?

6. If the meter is to measure a solids-bearing liquid:

   a. Are single sensor taps being used as opposed to a piezometric ring?

   b. Has either a flushing system or diaphragm-sealed sensor system been provided?

7. Is adequate straight run piping provided up and downstream from the meter tube (see Part F, Installation)?

8. Have provisions been made for bleeding and flushing tap lines?

9. Are the tap lines sloped properly?

10. Are both the meter and secondary elements readily accessible?

11. Will the meter be placed in a process line having smooth dynamics, e.g., not pulsating as in positive displacement pump applications?

H. Acceptance and Performance Monitoring

Provide for acceptance testing and performance monitoring as described in Section 7.1, relating to:

1. Hydraulic flow testing.

2. Verification of manufacturer accuracy and factory calibration documentation.

I. Maintenance and Calibration

1. Primary system.

   a. If the tube has manual rodders (bayonets), use these weekly or when the flushing water (if used) flow rate decreases.

   b. If annular rings are included with the tube, bleed off gas periodically.

   c. If performance monitoring indicates an accuracy change, test the primary with a portable manometer.

2. Secondary systems.

   a. Bleed tap lines of entrapped air regularly.

   b. Re-calibrate the transmitter monthly using a portable manometer.

J. Deficiencies

The following problems are commonly encountered with existing venturi and flow tube applications:

1. Meter oversized, low flow measurements are lost due to square root function cut-off.

2. Meters installed in process lines having pulsating flow (reciprocating pumps), causing erroneously high flow rates.

3. Tap lines inadequately sloped and/or not provided with bleed valves, causing gas buildup.

4. Improper differential range selection for the Δp transmitter.

5. Inadequately designed flushing systems which skew the pressure differential.

6. Insufficient straight run piping upstream and downstream of the meter.

K. References

1. Liptak, B. G., and K. Venzcel. Instrument Engineers Handbook of Process Measurement. Chilton Book Company, Radnor, Pennsylvania, 1969, Revised, 1982.

2. Spink, K. L. Principles and Practice of Flow Meter Engineering, 9th edition. The Foxboro Co., 1967.

3. Water Pollution Control Federation. Instrumentation in Wastewater Treatment Plants. WPCF Manual of Practice No. 21, 1978.

4. International Standards Organization. Measurement of Fluid Flow by Means of Orifice Plates, Nozzles and Venturi Tubes Inserted in Circular Cross-Section Conduits Running Full. ISO/DIS 5167, 1976, draft revision of R781.

5. International Standards Organization. Fluid Flow in Closed Conduits--Connections for Pressure Signal Transmissions Between Primary and Secondary Elements. ISO 2186 - 1973.

6. American Society for Testing and Materials. Standard Method of Flow Measurement of Water by the Venturi Meter Tube. ASTM D2458-69.

7. Henson, J. E. Process Instrumentation Manifolds. Instrument Society of America, Research Triangle Park, NC, 1981.

8. Fluid Meters, Their Theory and Application. Report ASME Research Committee on Fluid Meters, American Society of Mechanical Engineers, New York, New York, 1971, 6th Edition.

9. Sprenkle, R. E. Piping Arrangements for Acceptable Flowmeter Accuracy. ASME Transactions 67:345, New York, New York, 1945.

10. Starret, P. S., P. F. Halfpenny and H. B. Noltage. Survey of Information Concerning the Effects of Nonstandard Approach Conditions Upon Orifice and Venturi Meters. Paper presented at Winter Annual Meeting, American Society of Mechanical Engineers, New York, New York, 1965.

3.0 FLOW MEASUREMENT, CLOSED CONDUIT GAS FLOW

3.1 ORIFICE PLATE

A. Application

The following general conditions provide suitable applications for orifice plate gas flow meters:

1. Clean gas, or steam.

2. A relatively large head loss is acceptable.

3. The Reynolds number at minimum flow is greater than 10,000.

4. A meter maximum to minimum ratio of 3:1 is acceptable.

TABLE 3.1. FLOW MEASUREMENT, CLOSED CONDUIT GAS FLOW APPLICATION GUIDELINES

Recommended	Not Recommended
Boiler steam	Wet steam
Compressed digester gas	Low pressure (uncompressed) digester gas
Natural gas	Strongly corrosive gases
Activated sludge treatment	
- blower air	
- oxygen	
Incinerator draft/blower air	
Aerated grit chamber, air flow	

The discussions in this section pertain to concentric orifice plates. Other configurations, segmental and eccentric, are available to accommodate particular application problems.

B. Sizing Guidelines

Proper sizing of the orifice plate is required for accurate flow measurement. Use the following guidelines:

1. Plate Thickness

   a. Pipe I.D. from 5-20 cm (2-12 in): 0.3 cm (1/8 in) thick.

      Pipe I.D. 35 cm (14 in) and larger: 0.6 cm (1/4 in) thick.

b. Bevel plates thicker than 0.3 cm (1/8 in) on the downstream orifice edge as shown in Figure 3.1.

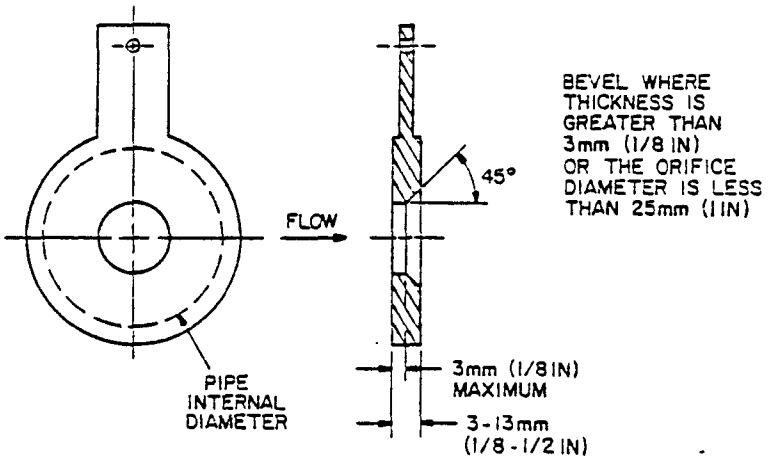

Figure 3.1. Concentric orifice plate.

2. Orifice diameter.

The Beta ratio is defined as the ratio of orifice diameter (d) to the pipe I.D. (D) and is critical for accurate flow measurement. For air and steam flow measurement, it is recommended that the Beta ratio be greater than 0.2 but less than 0.7(5). The flow calculations used for determining the Beta ratios are standardized but rather complex. These calculation methods are thoroughly covered in References 2 and 7.

C. Principle of Operation

Orifice plates are differential-producing head-type flow measuring devices made of a thin, flat plate having an opening (orifice). When installed in cross section with the process pipe, orifice plates cause an increase in the flow velocity as the process gas moves through the orifice, causing a corresponding decrease in downstream pressure. A differential pressure measuring device is connected across the orifice plate to sense the differential pressure. Figure 3.2 illustrates this principle.

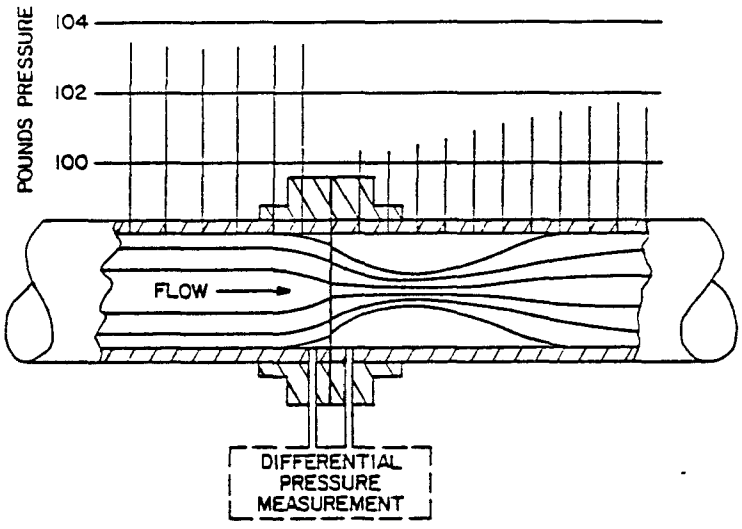

Figure 3.2. Pressure profile.

The orifice plate flow meter is a primary sensing element which creates a pressure differential proportional to the square of the flow rate. This pressure is measured by a differential pressure sensor (Δp) which converts the differential pressure to either a voltage or a current signal. A secondary element to convert the non-linear differential pressure into a linear flow rate is required. This can be done using a square root scale, square root extractor or computer.

Location of the pressure taps determines the exact relationship between differential pressure and flow rate. These relationships are stated in standard reference material (2, 7). The basic equations are:

For gas flow: $Q = K\sqrt{\frac{hP}{TG}}$ (eq.1)

For steam flow: $W = K\sqrt{\frac{h}{V}}$ (eq.2)

Q = volume flow rate (scfh)
K = basic orifice expansion, flow and conversion factors that usually are constant for a given application
h = differential pressure across the orifice in inches of water
P = absolute flowing pressure, psia
T = absolute flowing temperature (°R = °F + 460)
G = specific gravity of gas (air = 1.0)
W = mass flow in pounds per hour (lb /hr)
V = specific volume (ft^3/lb) determined from Standard Steam Tables

D. Accuracy and Repeatability

The total accuracy and repeatability of an orifice plate flow-measuring system must include the accuracy and repeatability of the orifice, Δp sensor, and the square root extractor. The following limits are achievable by orifice plate meters for the applications listed in Table 3.1:

1. Accuracy: $\pm 1/2$ to $\pm 2\%$ of full scale.

2. Repeatability: $\pm 1.0\%$ of full scale.

These accuracy levels reflect optimum values achievable by the measuring system when properly applied and installed. The main factors which will degrade these levels include: improper orifice sizing with respect to the Beta ratio; flows either less or greater than anticipated, and piping configurations which disrupt the velocity profile.

E. Manufactured Options

1. Type of construction materials.

2. Pressure connection location.

   a. Flange taps (standard).

   b. Vena contracta taps.

   c. Radius taps.

   d. Corner taps.

3. Orifice shape and location:

   a. Concentric (standard), with or without drain and vent holes.

   b. Eccentric, with or without drain and vent holes.

   c. Segmental, with or without drain and vent holes.

4. Removable orifice plate (without process disruption).

5. Secondary element:

   a. Differential pressure transmitter (standard).

   b. Manometer transmitter (not recommended).

6. Additional sensors (for measuring line temperature and pressure) and a module for calculating gas flow in standard units.

F. Installation

1. Primary system.

a. Mount the orifice plate in either horizontal or vertical process piping. Pressure tap locations and Δp transmitter locations will differ according to the orientation selected.

b. Install beveled or cut away plates (Figure 3.1) with the flat surface upstream.

c. Use 1.6 millimeter (1/16 in) thick gaskets, graphited on the side next to the plate. The gaskets must not extend into the pipe or obstruct vent and drain holes (if used).

d. Provide straight run smooth piping upstream and downstream of the orifice plate. The length of straight run required depends on the Beta ratio. Recommended lengths are shown in Figure 3.3. Use straightening vanes when it is not practical to install the meter with the recommended straight pipe length.

e. Pressure taps should be free of any burrs or protrusions into the pipe.

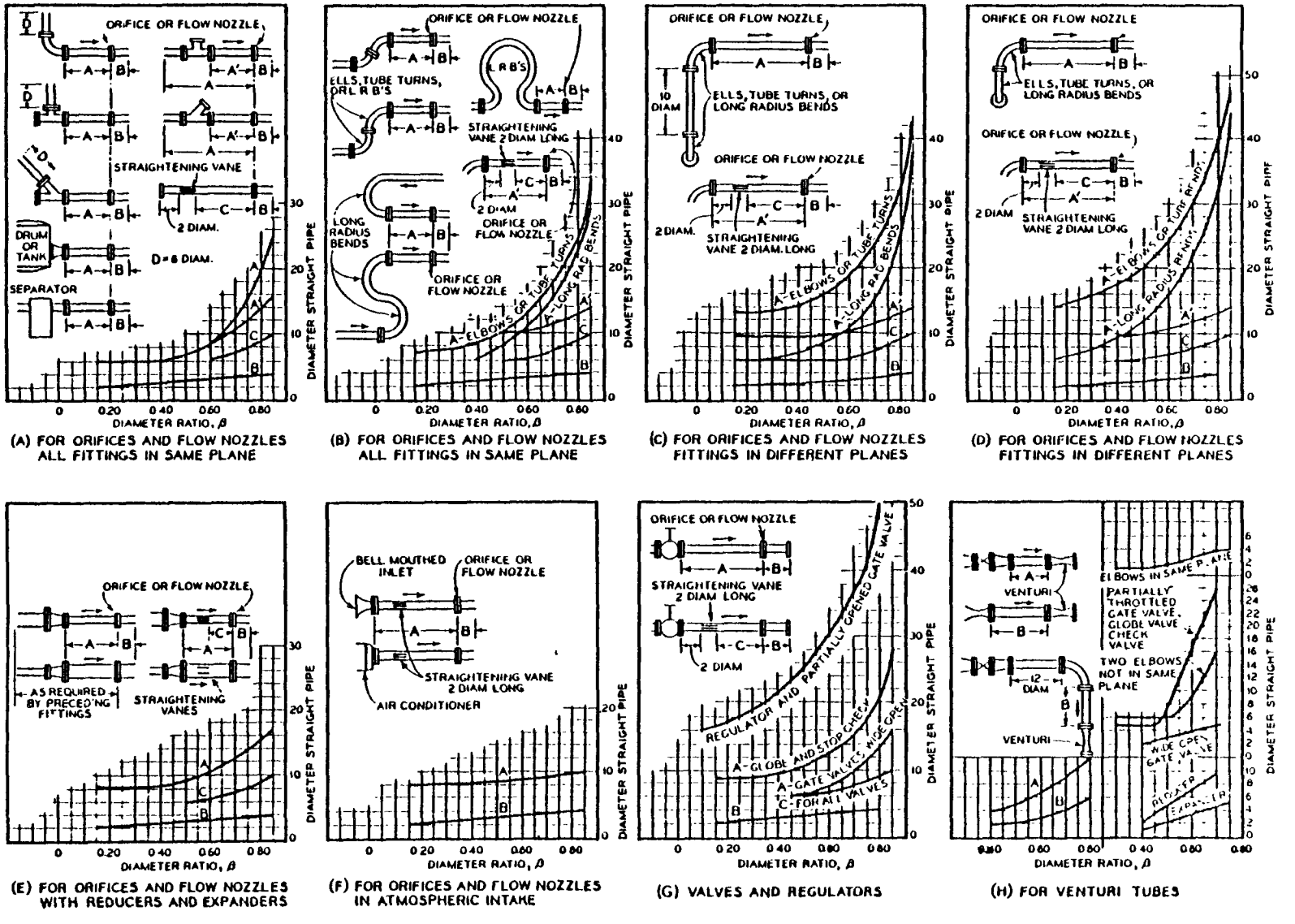

FIG. II-II-1 RECOMMENDED MINIMUM LENGTHS OF PIPE PRECEDING AND FOLLOWING ORIFICES, FLOW NOZZLES AND VENTURI TUBES (ALL CONTROL VALVES, INCLUDING REGULATORS, SHOULD BE LOCATED ON OUTLET SIDE OF PRIMARY ELEMENT.)

Figure 3.3. Orifice straight run requirements. (reprinted courtesy of ASME)

2. Secondary system.

Installation of the secondary system (pressure connections, tap line run, and Δp transmitter location) differs between applications for steam flow (condensible) and gas flow measurement.

a. Steam flow measurement.

1) A typical installation diagram is shown in Figure 3.4.

2) Always use condensing chambers on tap line runs. Mount each chamber at the same level.

3) Install horizontal portions of tap line runs so they slope downward from the orifice at a 1 in 12 grade.

4) Install the Δp transmitter below the orifice plate location for both vertical and horizontal piping runs.

5) If the transmitter must be mounted above the pressure connections either vena contracta or pipe taps are recommended. Flange taps are not recommended.

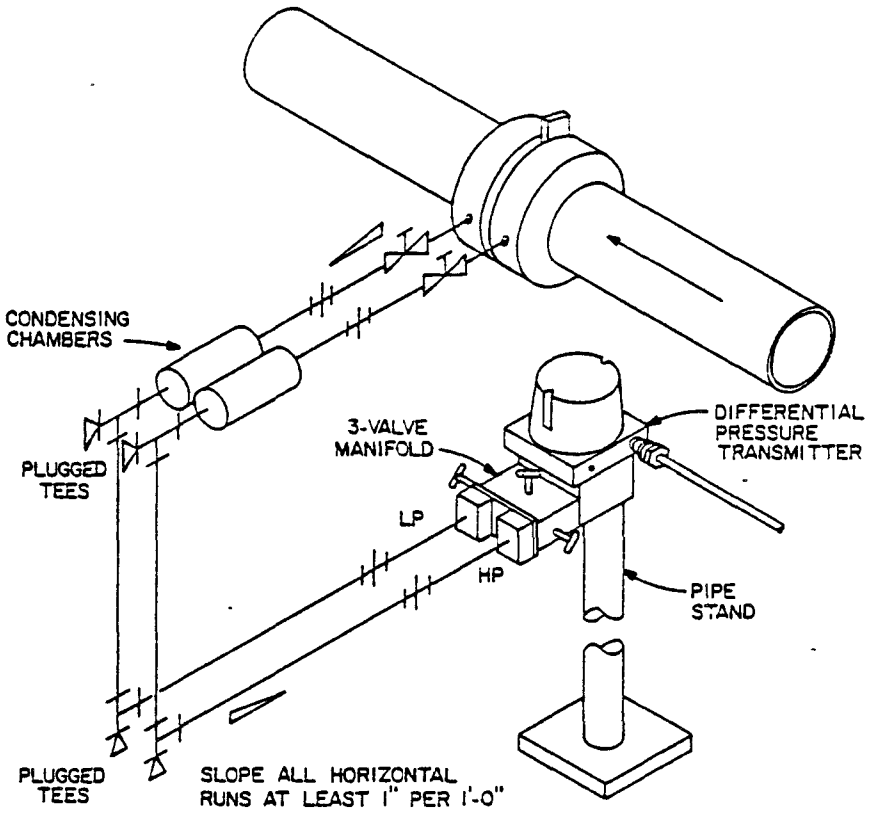

Figure 3.4. Steam flow installation.

b. Gas flow measurement.

1) A typical installation diagram is shown in Figure 3.5.

2) Mount the Δp transmitter above the orifice plate for both vertical and horizontal piping runs.

3) If the gas is corrosive, use a liquid seal with diaphragm pressure connections to isolate the transmitter.

4) Install horizontal portions of tap line runs so they slope upward from the orifice at a 1 to 12 grade.

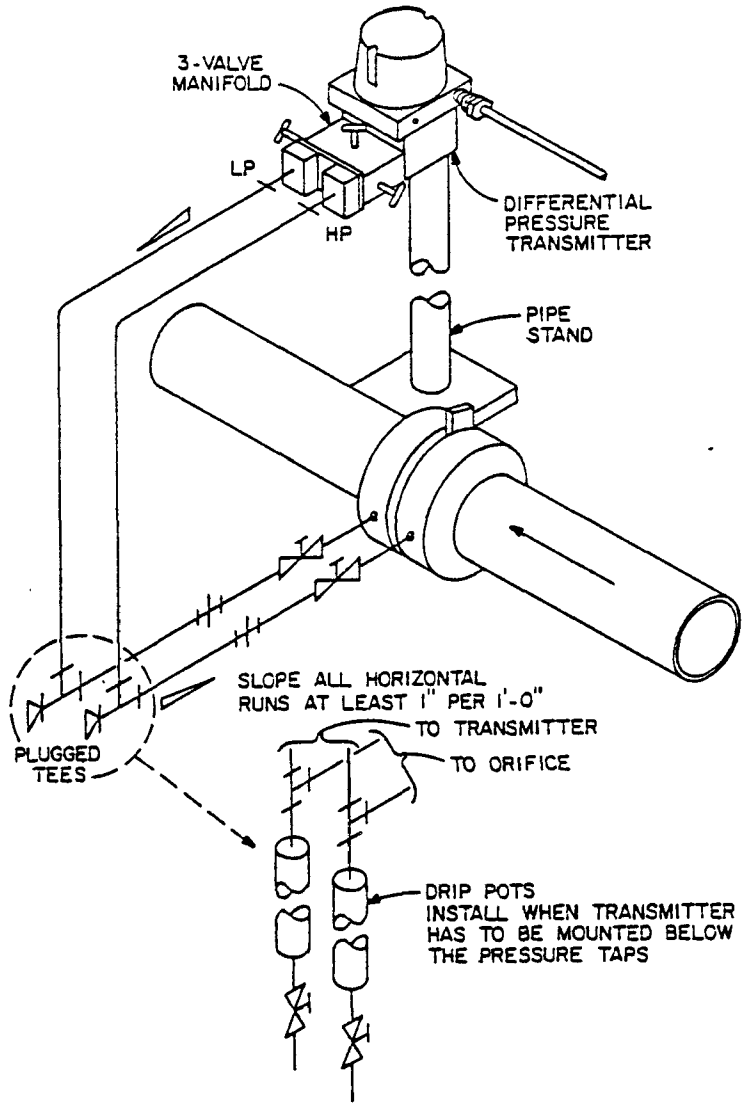

Figure 3.5. Gas flow installation.

3. Additional recommendations.

a. Locate the transmitter to facilitate easy access for calibration and maintenance.

b. Tap line runs should not exceed 15 m (50 ft) and, if freezing is possible, should be insulated or heated.

c. Take special care to mount the Δp transmitter pressure connection plumbing so the differential measurement is not affected.

d. An isolation valve manifold and quick disconnects should be installed in the tap lines to facilitate sensor calibration.

G. Designer Checklist

Use the following checklist when designing or reviewing orifice plate gas flow meter applications. All checklist items should be verified affirmative for proper application and installation.

1. General items.

a. Is the process gas or steam recommended in Table 3.1?

b. Is a large head loss acceptable?

c. Is the Reynolds number at minimum flow greater than 10,000?

d. Has the proper orifice size based on Beta ratio, (d/D ratio) been determined for the expected flow range and allowable pressure loss?

e. Is the Beta ratio greater than 0.2 and less than 0.7?

f. Will the meter construction materials withstand the corrosive properties of the fluid to be measured?

g. Has the proper differential range been selected for the Δp transmitter?

h. Have the flange gaskets been properly sized to insure no protrusion into the inside diameter of the process pipe?

i. Does the straight run piping conform to the minimum requirements in Figure 3.4?

j. Are the tap line runs less than 15 m (50 ft) long?

k. If freezing is possible, are the tap lines adequately insulated or heated?

l. Has an isolation valve manifold and quick disconnects been installed in the tap lines to faciliate Δp sensor calibration?

m. Will the Δp sensor be mounted in a vibration free location?

2. Steam flow measurement.

a. Have condensing chambers been provided in the tap lines and are they of adequate size?

b. Is the transmitter mounted below the process connections? If it is not, have either vena contracta or pipe taps been used rather than flange taps? Insulate from thermal shocks with tube loop (pig tail) or other means.

3. Gas flow measurement.

a. Is the transmitter mounted above the process connections?

b. Have condensate traps been installed at the lowest point of the tap line runs?

c. If the gas is corrosive, have diaphragm sealed pressure connections been provided?

H. Acceptance and Performance Monitoring

Recommended acceptance testing and performance monitoring procedures are described in Section 7.2 related to:

1. Verification of manufacturer accuracy and factory calibration documentation.

2. On-site testing.

I. Maintenance and Calibration

1. Primary system (orifice assembly).

a. Test the primary with a portable manometer monthly.

b. If accuracy problems persist, remove orifice plate and inspect orifice for solids buildup and/or wear.

2. Secondary system (Δp sensor).

a. For gas flows, empty condensate traps once per week.

b. Recalibrate transmitter monthly using a portable manometer or other suitable calibration test set.

J. Deficiencies

The following problems are commonly encountered with existing orifice plate gas flow meter applications.

1. Orifice oversized (Beta ratio too high) thus generating a differential too low to be accurately monitored by the Δp transmitter provided.

2. Orifice properly sized, but the wrong Δp sensor range was selected.

3. Condensate traps not provided, causing water accumulation and occasional freezing in the lines.

4. Unequal tap line lengths or elevations, causing differential measurement errors.

5. Insufficient straight run piping provided.

6. Insufficient calibration of primary and secondary systems.

K. References

1. Liptak, B. G. and K. Venczel. Instrument Engineers Handbook of Process Measurement. Chilton Book Company, Radnor, Pennsylvania, 1969, Revised, 1982.

2. Fluid Meters, Their Theory and Application. Report of ASME Research Committee on Fluid Meters, American Society of Mechanical Engineers, 345 East 47th Street, New York, New York, 1971, 6th Edition.

3. The Foxboro Company. Technical Bulletins 6-110, 7-110, 7-251. Foxboro, Massachusetts.

4. Instrument Society of America. Flange Mounted Sharp Edged Orifice Plates for Flow Measurement. ISA-RP3.2-1978. Research Triangle Park, NC.

5. American Petroleum Institute. Manual on Installation of Refinery Instruments and Control Systems. Part 1 - Process Instrumentation and Control. Section 1 - Flow. API RP550, Washington, DC, 1977, 3rd Edition.

6. Henson, J. E. Process Instrumentation Manifolds. Instrument Society of America, Research Triangle Park, NC., 1981.

7. Spink, L.K. Principles and Practice of Flow Meter Engineering. The Foxboro Company, Foxboro, MA, 1967, 9th Edition.

8. Cusick, C. F. Flow Meter Engineering Handbook. Honeywell, Inc., Fort Washington, PA, 1977, 3rd Edition.

9. Sprenkle, R. E. Piping Arrangements For Acceptable Flow Meter Accuracy. ASME Transactions 65:345, New York, NY, 1945.

10. Starret, P. S., Halfpenny, P. F. and Noltage, H. B. Survey of Information Concerning the Effects of Nonstandard Approach Conditions Upon Orifice and Venturi Meters. Paper presented at Annual Winter Meeting, American Society of Mechanical Engineers, New York, NY, 1965.

3.2 VENTURI TUBES AND FLOW TUBES

A. Applications

General conditions which are suitable for the application of venturi and proprietary flow tube gas flow meters:

1. The Reynolds number of the process stream at the meter is greater than 150,000.

2. A meter rangeability of 4:1 is acceptable.

TABLE 3.2. VENTURI TUBES AND FLOW TUBES APPLICATION GUIDELINES

Recommended	Not Recommended
Boiler steam	Any low-pressure (uncompressed) gas flows
Compressed digester gas	
Incinerator draft/blower air	
Air flow	
Oxygen flow	
Corrosive gasses	

B. Principle of Operation

1. Venturi tube.

A venturi tube operates on the principle that a gas flowing through a meter section containing a convergence and constriction of known shape and area will cause a pressure drop at the constriction area. The difference in pressure between the inlet and the constriction area (throat) is proportional to the square of the flow rate. Figure 3.6 shows a cut-away of a typical venturi tube.

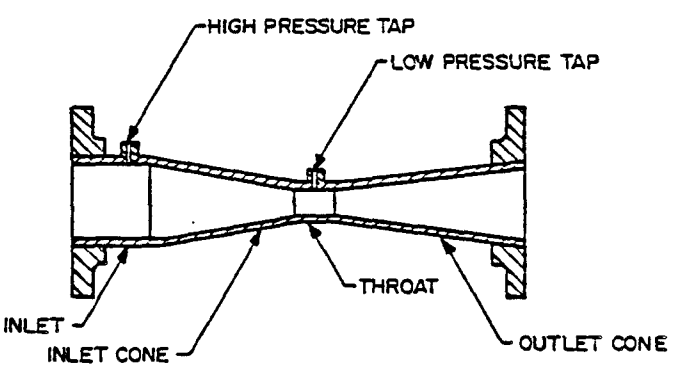

Figure 3.6. Classic venturi tube.

2. Flow tube.

Several manufacturers provide differential-causing flow tubes that are modified versions of the classical venturi tube. These devices operate on the same principle as the classical venturi; however, they provide features which make them more attractive for some applications, i.e., less space is required for installation and overall head loss is reduced. Figure 3.7 shows three commonly used flow tubes.

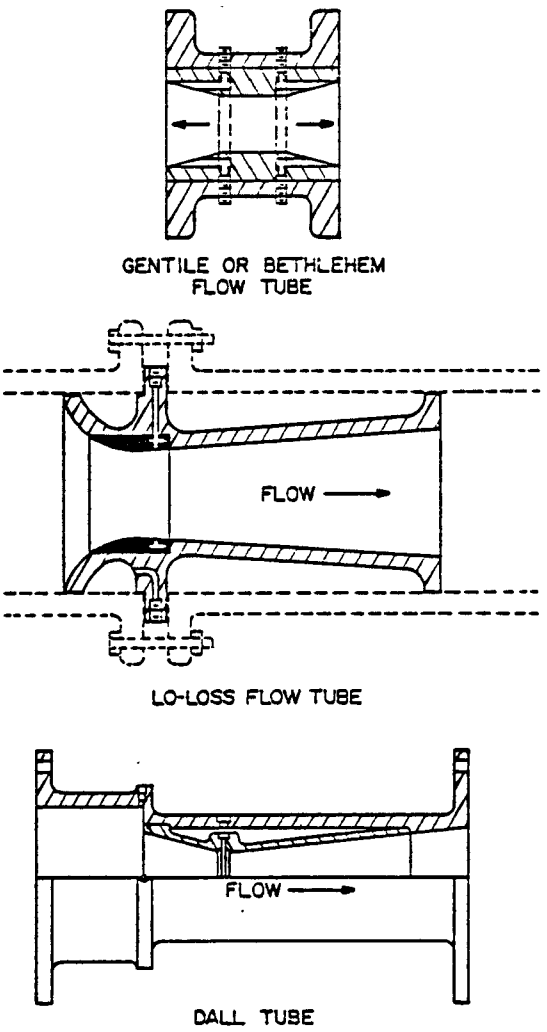

Figure 3.7. Proprietary flow tubes.

3. Pressure sensing.

Both the venturi tube and the proprietary flow tubes are primary elements and require a secondary element to sense the pressure differential and convert it to a usable signal. The secondary element in most applications is a differential pressure (Δp) transmitter.

The Δp produced by a flow tube is representative of the volumetric flow rate at the actual operating temperature and pressure. Appropriate temperature and pressure sensors are required to correct the transmitter output to standard reference conditions.

The Δp in the tube is measured at the inlet and throat (Figure 3.6).

One Δp measurement method uses single connections in the inlet and throat of the tube. The pressure tap lines are coupled directly to the tap holes and run to the Δp transmitter.

As an alternative method, piezometric rings may be used to sense inlet and throat pressures. These consist of several holes around the circumference of the tube at the inlet and throat tap locations. Each set of holes is connected to an annulur ring to give an average of the pressure at each tap hole connected to the ring. Piezometric rings are usually used in large diameter tubes to minimize velocity profile skewing.

C. Accuracy and Repeatability

The accuracy and repeatability of these meters vary with the type used. The characteristics of the secondary element (transmitter) must also be included in the total accuracy figure. The following limits can be expected when considering these types of flow meters for applications previously listed:

Accuracy:	$\pm$1% of actual flow.
Repeatability:	$\pm$1% of actual flow.

The values shown are for a complete system (primary and secondary) when properly applied and installed. Factors which will degrade these levels during operation include: improper tube sizing, improper Δp range, insufficient straight pipe before and after the meter (see Part F, Designers Checklist) and piping elements which disrupt the velocity profile (see Part E, Installation).

Venturi tubes, flow tubes, and flow nozzles are all capable of exceeding the accuracy values shown. Consult the manufacturer if greater accuracy is required. Caution: both the primary and secondary element must be considered when designing for optimum accuracy.

D. Manufactured Options

1. Primary meter tube.

   a. Single sensing ports.

   b. Piezometer ring sensing.

   c. Inspection openings.

   d. Manual rodders for cleaning sensing ports.

2. Secondary element (transmitter).

   a. Differential pressure transmitter (see Section 6.2).

   b. Manometer transmitter (not recommended).

   c. Temperature and pressure correction system

E. Installation

1. Primary system.

   a. Venturi and flow tubes may be installed in any position to suit the requirements application; however, the primary and secondary system must be accessible for maintenance and calibration.

   b. Flow disturbing obstructions, pipe fittings and valves will produce meter inaccuracies and should not be located too near the meter inlet. Use Figure 3.8 is to determine the minimum upstream distance of straight pipe recommended between fittings and the meter inlet.

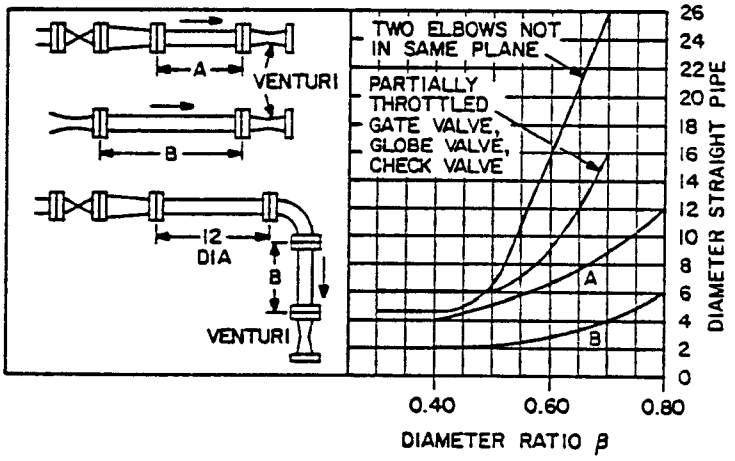

Figure 3.8. Venturi piping requirements.

c. If a flow control valve is required in the line, it should be placed downstream from the meter tube as shown in Figure 3.8.

d. Locate all downstream pipe fittings a minimum distance of two pipe diameters downstream of the throat tap(s).

e. Install the primary and secondary flow elements in an accessible location with suitable space provided for maintenance and calibration.

2. Secondary system.

Installation of the secondary system (pressure connections, tap line run, and Δp transmitter location) differs between applications for steam flow (condensible) and gas flow measurement.

a. Steam flow measurement.

1) The tap lines are normally flooded with condensate.

2) Use condensing chambers on tap line runs. Mount each chamber at the same level.

3) Slope horizontal tap line runs downward from the pressure taps at a 1 in 12 grade.

4) Install the Δp transmitter below the process pipe for horizontal runs, or below the pressure connections for vertical runs.

5) A typical installation diagram is shown in Figure 3.9.

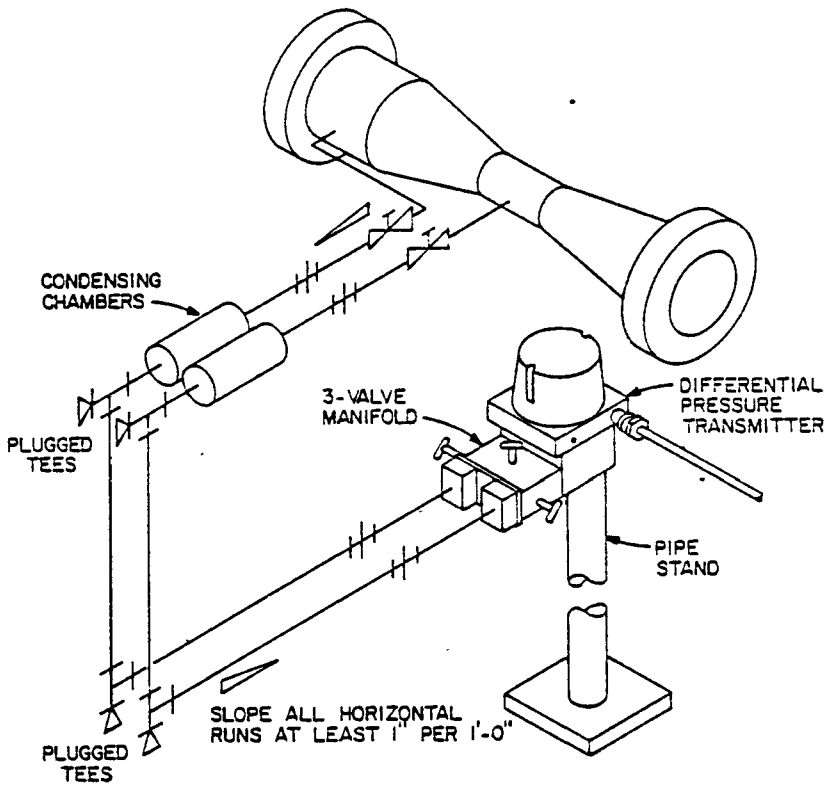

Figure 3.9. Steam flow measurement installation diagram.

b. Gas flow measurement.

1) The tap lines are normally dry.

2) Mount the Δp transmitter above the process pipe for horizontal runs, or above the pressure connections for vertical runs.

3) If the gas is corrosive, use a liquid seal with diaphragm pressure connections to isolate the transmitter.

4) Slope horizontal tap line runs upward from the pressure taps at a 1 and 12 grade.

5) A typical installation diagram is shown in Figure 3.10.

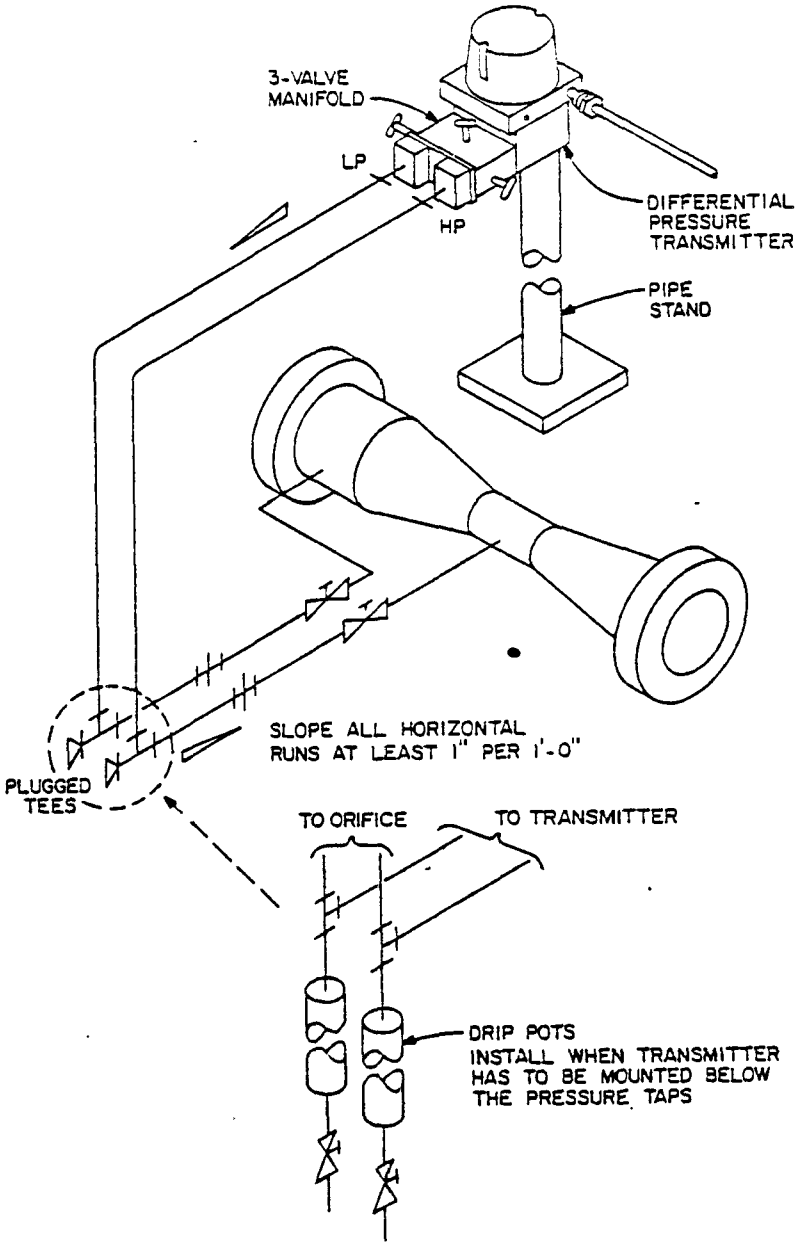

Figure 3.10. Gas flow measurement installation diagram.

3. Additional recommendations.

   a. The transmitter should be located to facilitate easy access for calibration and maintenance.

   b. Tap line runs should not exceed 15m (50 ft.) in length.

   c. If a freezing potential exists, heat trace and insulate the tap lines.

   d. Mount the transmitter so that the high and low pressure connections are at exactly equal elevation. Failure to do so will create a bias in the indicated Δp which will in turn introduce an error in flow measurement.

   e. An indicator guage (ΔP) should be placed near the primary element for convenience in calibration and performance monitoring (usually mounted on the secondary element).

   f. The Beta ratio and overall diameter of the flow tube should be carefully determined for the expected flow range. Accordingly, the range of the Δp transmitter must match that of the flow tube over the expected flow range.

F. Designer Checklist

Use the following checklist when designing or reviewing orifice plate gas flow meter applications. Answer all checklist items with a yes for proper application and installation.

1. Is the process gas or steam recommended in Table 3.2?

2. Is the Reynolds number greater than 150,000?

3. Has the primary element been properly sized to generate a suitable differential pressure over the range of the expected flow? Bear in mind that meter sizing for 20 year projected flow typically results in oversizing.

4. Has the proper differential range been selected for the secondary device?

5. Has adequate straight run piping been provided both up and downstream?

6. Are the tap lines sloped properly?

7. If measuring steam flow; is the transmitter installed below the process connections, and have condensing chambers been provided in the tap lines?

8. Are the tap line runs less than 15m (50 ft)?

9. Is freezing a possibility? If so, are the tap lines heated and insulated?

10. Are both the primary and secondary systems readily accessible for maintenance?

11. When metering gas flow; is the transmitter installed above the process connections?

12. When metering gas flow; have condensate traps or drip legs been installed at the low point of the tap line runs?

G. Maintenance and Calibration

1. Primary system.

   a. If performance monitoring indicates a large accuracy loss, test the primary with a portable manometer.

2. Secondary system.

   a. Bleed off condensate in the tap lines regularly.

   b. Zero and recalibrate transmitter monthly using a portable manometer.

H. Deficiencies

The following problems are commonly encountered with existing venturi and flow tube applications:

1. Meter oversized. Low flow differentials are lost due to square root function cut-off.

2. Gas buildup caused by tap lines that are not properly sloped and/or not equipped with bleed valves.

3. Improper differential range selection for the Δp transmitter.

4. Tap lines are plugged or restricted.

I. References

1. Liptak, B. G. and K. Venczel. Instrument Engineers Handbook of Process Measurement. Chilton Book Company, Radnor, Pennsylvania, 1969, Revised, 1982.

2. Spink, K. L. Principle and Practice of Flow Meter Engineering. The Foxboro Co., Foxboro, Massachusetts, 1967, 9th Edition.

3. Water Pollution Control Federation. Instrumentation in Wastewater Treatment Plants, WPCF Manual of Practice No. 21, 1978.

3.3 AVERAGING PITOT TUBES

A. Applications

The following general conditions are suitable for the application of averaging pitot tubes:

1. Clean gas or steam (free of solids),
2. Minimize head loss, and
3. An acceptable meter rangeability of 3:1.

TABLE 3.3. AVERAGING PITOT TUBES APPLICATION GUIDELINES

Recommended	Not Recommended
Boiler steam	Gas or steam with particulate solids
Compressed digester gas	Low pressure (uncompressed digester gas)
Natural gas	Corrosive gases
Activated sludge treatment	
- blower air	
- oxygen	
Incinerator draft/blower air	
Aerated grit chamber, air flow	

B. Principle of Operation

Averaging pitot tubes are differential producing flow measuring devices that consist of an insertion probe with multiple upstream sensing ports and a single downstream static port. The probe is geometrically constructed such that an average upstream pressure is measured. Figure 3.1 shows the probe.

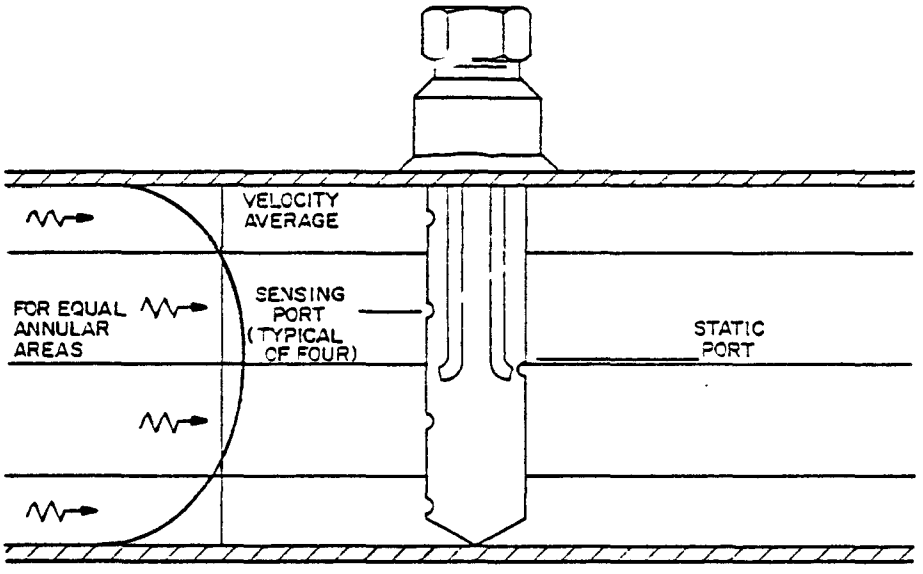

Figure 3.11. Pitot tube probe.

The averaging pitot tube, like the venturi meter is a primary sensing element that creates a pressure differential proportional to the square of the flow rate. Like the venturi, a Δp cell is used to measure the differential pressure and convert it to a voltage or current signal. A secondary element to convert the nonlinear differential into a linear flow rate is required. In most cases, this device is a square root extractor.

C. Accuracy and Repeatability

The accuracy and repeatability of the averaging pitot tube is good; however, the characteristics of the Δp transmitter and square root extractor must be included in the total accuracy figure. The following performance limits are attainable by averaging pitot tubes for the previously recommended applications:

1. Accuracy: $\pm$1.0 to 3% of full scale.

2. Repeatability: $\pm$1.0% of full scale.

These accuracy levels reflect optimum values achievable for proper application and installation. Factors that will degrade these levels include operation at actual flows outside the expected flow range, and piping elements that disrupt the velocity profile.

D. Manufactured Options

1. Mounting:

   a. Mounting coupling,

   b. Flange, and

   c. Hot tap.

2. Secondary element:

   a. Differential pressure transmitter (standard), and

   b. Manometer transmitter (not recommended).

3. Calculation modules for standard pressure, temperature correction and linearization to flow units.

E. Installation

1. Primary system.

   a. Mount the averaging pitot tube in either horizontal or vertical process piping. However, the tap line configuration and Δp transmitter locations will differ.

b. Install the probe with the multiple ports facing upstream.

c. Provide adequate straight-run smooth piping upstream and downstream of the pitot tube. When it is not practical to install the pitot tube with the recommended straight pipe length, use straightening vanes. Recommended lengths with and without vanes are shown in Figure 3.12.

MINIMUM DIAMETERS OF STAIGHT PIPE[1]	UPSTREAM DIMENSION					DOWNSTREAM DIMENSION
	WITHOUT VANES		WITH VANES			
	IN PLANE	OUT OF PLANE				
	A	A	A	C	C	B
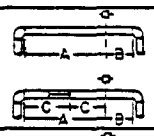	7	9				3
			6	3	3	
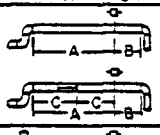	9	14				3
			8	4	4	
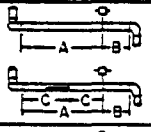	19	24				4
			9	4	5	
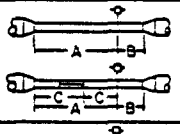	8	8				3
			8	4	4	
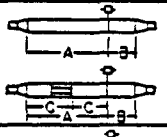	8	8				3
			8	4	4	
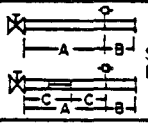 SEE NOTE 2	24	24				4
			9	4	5	

Figure 3.12. Typical upstream/downstream requirements.

2. Secondary systems.

Installation of the secondary system (pressure connections, tap line run, and Δp transmitter location) differs between applications for steam flow (condensible) and gas flow measurement.

a. Steam flow measurement.

1) A typical installation diagram is shown in Figure 3.13.

2) Always use condensing chambers on tap line runs. Mount each chamber at the same level. Size condensation chambers large enough for the application. This is to prevent flooding between routine maintenance checks.

3) Install horizontal portions of tap line runs so they slope upward from the primary element at a 1 in 12 grade.

4) Install the Δp transmitter below the process pipe for horizontal piping runs, below the pitot tube location for vertical piping runs.

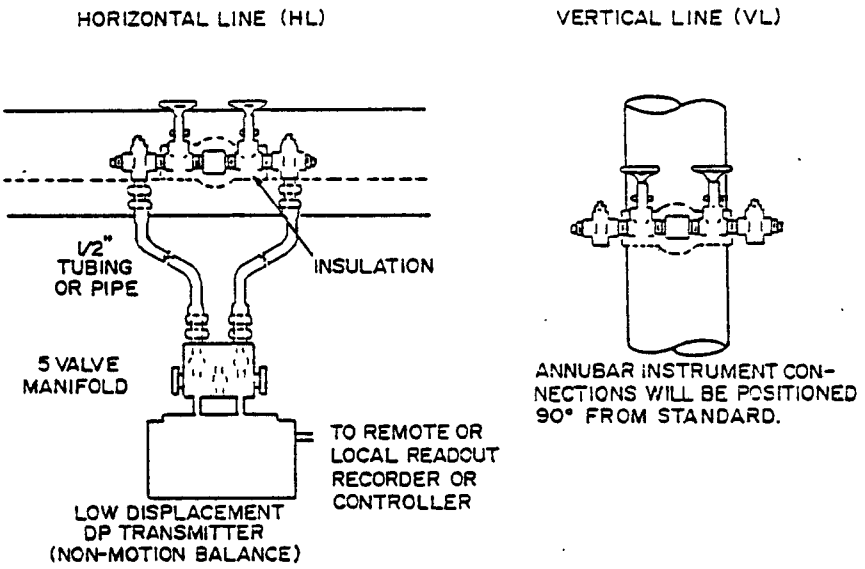

Figure 3.13. Installation for steam flow applications.

b. Gas flow measurement.

1) A typical orientation diagram is shown in Figure 3.14.

2) Mount the Δp transmitter above the process pipe for horizontal piping runs, above the pitot tube for vertical piping runs.

3) Install horizontal portions of tap line runs so they slope upward at a minimum of a 1 in 12 grade.

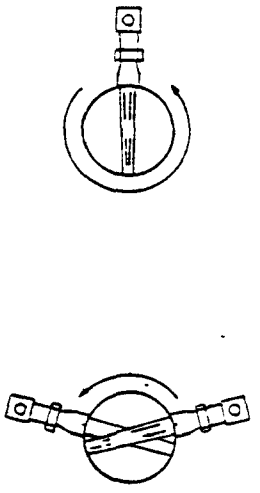

Figure 3.14. Orientation for gas flow applications.

3. Additional recommendations.

   a. Locate the transmitter to facilitate easy access for calibration and maintenance.

   b. Tap line runs should not exceed 15 m (50 ft) and, if freezing is possible, should be insulated.

   c. Mount the transmitter so that the high and low pressure connections are at exactly equal elevation.

   d. Provide a 3-valve manifold and quick connects for connecting a manometer during calibration.

F. Designer Checklist

Use the following checklist when designing or reviewing pitot tube gas flow meter applications. All checklist items should be verified affirmative for proper application and installation.

1. General items.

   a. Is the process gas or steam recommended in Table 3.3 and free of particulates?

   b. Has the proper differential pressure range been selected for the secondary device, i.e., Δp transmitter?

   c. Has adequate straight-run piping been provided to conform to the minimum requirements in Figure 3.12?

d. Do the horizontal tap line runs slope upward at a minimum of a 1 to 12 grade?

e. Are the tap line runs less than 5M (15 ft) long?

f. If freezing is possible, are the tap lines insulated and heat traced?

g. Have a 3-valve manifold and quick disconnects for a manometer been provided for calibration?

h. Will the meter be mounted in a vibration free location?

2. Steam flow measurement.

a. Have condensing chambers been provided in the tap lines and are they of adequate size?

b. Is the transmitter mounted below the process connections?

3. Gas flow measurement.

a. Is the transmitter mounted above the process connections?

b. Have condensate traps been installed at the lowest point of the tap line runs?

G. Acceptance and Performance Monitoring

Provide for acceptance testing and performance monitoring as described in Section 7.2, related to:

1. Hydraulic testing.

2. Verification of manufacturer accuracy and factory calibration and documentation.

H. Maintenance and Calibration

1. Primary system.

a. When performance monitoring indicates a large accuracy loss, test the primary with a portable manometer.

b. Extended periods of poor accuracy: remove pitot tube and inspect orifice for solids buildup and/or wear.

2. Secondary system.

   a. For gas flows, empty condensate traps once a week.

   b. Check the transmitter calibration monthly using a portable manometer or other suitable calibration test set.

I. Deficiencies

The following problems are commonly encountered with existing pitot tube gas flow meter applications.

1. The wrong range on the Δp transmitter was selected.

2. Condensate traps were not provided, causing water accumulation and occasional freezing in the lines.

3. Unequal tap line lengths or elevations used, causing differential errors.

4. Insufficient straight-run piping provided.

5. Infrequent maintenance.

J. References

1. Liptak, B. G. and K. Venczel. Instrument Engineers Handbook of Process Measurement. Chilton Book Company, Radnor, PA, 1969, Revised, 1982.

2. Considine, D. M. Process Instruments and Controls Handbook. McGraw Hill Book Company, New York, NY, 1974.

3.4 TURBINE FLOW METERS

A. Application

General conditions which are suitable for turbine meters to measure gas flow include:

1. An intermittent flow may be expected.

2. A maximum meter rangeability of 15:1 is acceptable.

TABLE 3.4. TURBINE FLOW METER APPLICATION GUIDELINES

Recommended	Not Recommended
Steam	Low pressure (uncompressed) digester gas
Compressed digester gas	
Natural gas	

B. Principle of Operation

Turbine flow meters consist of a pipe section with a multi-bladed rotor suspended in the fluid stream on a free running bearing, see Figure 3.15. The plane of rotation of the rotor is perpendicular to the flow direction and the rotor blades sweep out nearly to the full bore of the pipe. The rotor is driven by the process gas impinging on the blades. Within the linear flow range of the meter, the angular velocity of the rotor is directly proportional to the liquid velocity which is in turn, proportional to the volumetric flow rate. The speed of rotation is sensed by an electromagnetic pickup coil which produces a pulse. The output signal is a continuous voltage pulse train with each pulse representing a discrete volume of gas. The turbine output frequency is proportional to the volumetric flow rate at the actual operating temperature and pressure. An appropriate temperature and pressure correction system is required to convert the meter output into a volumetric rate at standard reference conditions.

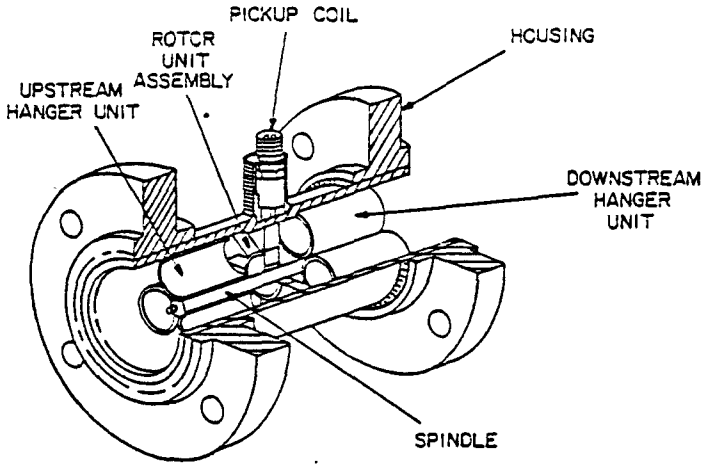

Figure 3.15. Gas turbine meter.

C. Accuracy and Repeatability

When properly applied and installed, the accuracy and repeatability characteristics of turbine flow meters, should be:

1. Accuracy: ±0.25% of actual flow, within the linear range of the meter.

2. Repeatability: ±0.05% within the linear range of the meter.

Each turbine flow meter has a unique "K" factor (the number of pulses generated per unit volume) which is determined during factory flow calibration. This factor and thus the accuracy of the meter, is affected by mechanical wear.

D. Manufactured Options

1. Wetted parts materials.

   a. Stainless steel (standard).

   b. Hastelloy "C".

   c. Teflon bearings.

2. Flow straightening vanes.

3. Additional electromagnetic pickup and associated electronics for increased accuracy.

4. Pressure and temperature correction system for calculating volumetric flow under standard conditions.

5. Turbine meters require secondary elements for indicating flow at the meter or retransmitting for remote monitoring. It is suggested these elements be purchased from the same manufacturer. If another supplier is used, take care to ensure that both units are compatible with regard to signal pulse shape, amplitude, width, and frequency.

   Typical secondary elements include:

   a. Electromechanical rate indicator and totalizer.

   b. Pulse-to-current signal converter.

   c. Signal pulse preamplifier (for long distance pulse signal transmission).

E. Installation

1. Piping obstructions which severely disturb the flow profile severely affect turbine meter accuracy. Figure 3.16 shows recommended piping installation including flow straightening vanes.

2. Turbine meters have a linear flow relationship. They are sized by volumetric flow rate. Use the following guidelines when sizing a turbine meter:

   a. Each meter size has a specified minimum and maximum range of flow linearity and should not be used for flow rates outside that range.

   b. The maximum flow rate for the application should be 70% to 90% of the maximum flow rate specified for the meter.

   c. Size the meter on actual volume flow and not on reference or standard units.

   d. The meter size should be less than the diameter of the process piping.

   e. Available turbine meter sizes range from 0.5 - 60.0 cm (3/16 to 24 inches) in diameter.

3. The recommended minimum upstream straight-run for optimum accuracy is 25 to 30 pipe diameters. If necessary, this distance may be reduced to 10 pipe diameters by installing straightening vanes. The following pipe fittings produce flow disturbances that will degrade meter accuracy if placed closer than the specified distances.

   a. Valves,

   b. Gates,

   c. Tees,

   d. Elbows, and

   e. Severe reducers and expanders (>30 degrees included angle).

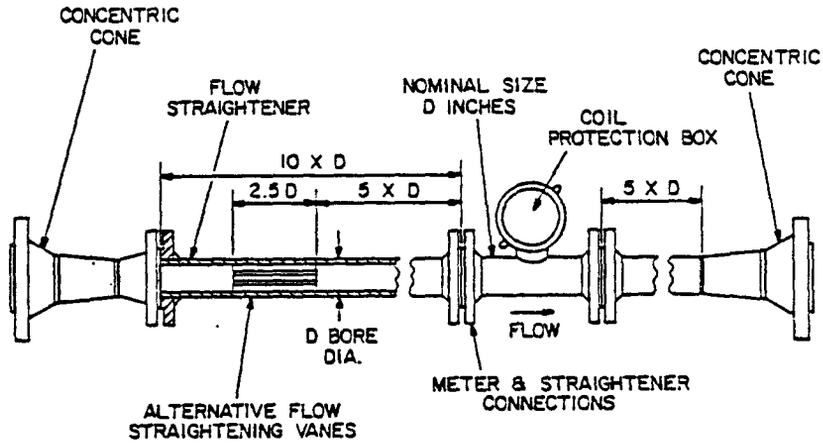

Figure 3.16. Meter installation.

4. Locate downstream piping obstructions at least 5 pipe diameters from the meter.

5. Use shielded cable between the turbine meter and secondary electronics.

6. Route power wiring and signal cable in separate conduit.

F. Designer Checklist

The following checklist should be used when designing or reviewing turbine flow meter applications. All checklist items should be answered affirmative for proper application and installation.

1. Is the intended process gas recommended in Table 3.4?

2. Can the expected head loss be tolerated?

3. Are all pipe obstructions located a minimum upstream distance of:

   a. 10 pipe diameters when flow straightening vanes are used?

   b. 25-30 pipe diameters without flow straightening vanes?

4. Is there a minimum downstream distance of 5 pipe diameters to any flow disturbing fittings?

5. Has the proper secondary flow indicator/signal conditioner been provided?

6. Is power available for the secondary element?

7. Is the meter accessible for maintenance?

8. Is the meter diameter smaller than the process piping?

9. If temperature and pressure correction are desired, have provisions been made?

G. Maintenance and Calibration

The meter constant "K" is determined at the manufacturer's facility prior to meter shipment and is performed under standard conditions. If the intended application process gas has significantly differing physical characteristics, the manufacturer should be consulted for additional testing data.

Turbine meters do not require calibration, but periodic calibration may be required on the secondary element. When meter accuracy becomes questionable (as observed through performance monitoring) check the "K" factor by physical testing.

H. Deficiencies

The following problems are commonly encountered with existng turbine meter applications:

1. Inadequate upstream and downstream straight run piping, resulting in poor meter accuracy.

2. Meter sized too large, resulting in poor accuracy at low flows.

3. Meter and secondary element are not compatible because of differing electrical specifications.

4. Although rare, the factory determined "K" factor is incorrect.

I. References

1. Liptak, B. G. and Venczel, K. Instrument Engineers Handbook of Process Measurement. Chilton Book Company, Radnor, Pennsylvania, 1969, Revised, 1982.

2. Foxboro Company. Technical Bulletin No. TI, 16-6a. Foxboro Company, Foxboro, Massachusetts, January, 1971.

4.0 FLOW MEASUREMENT, OPEN CHANNEL

4.1 KENNISON NOZZLE

A. Application

The Kennison nozzle is a proprietary product designed to measure flow only in partially filled pipes. Kennison nozzles are designed to flush through solids without accumulation and are generally considered to have a maximum to minimum measurement ratio of 10 to 1. A Kennison nozzle would be selected for flow measurement only when all of the following general conditions apply:

1. Pipe size is not smaller than 0.15 m (6 in) nor larger than 0.9 m (36 in).

2. The pipe does not flow full.

3. High and low operating flows fall respectively within the 100% and 10% capacity of the desired nozzle size.

4. The level of the liquid downstream will always be below the bottom of the nozzle so that free discharge exists.

TABLE 4.1. FLOW MEASUREMENT, OPEN CHANNEL APPLICATION GUIDELINES

Recommended	Not Recommended
Raw sewage	Filled lines
Partially filled lines	

B. Principle of Operation

The Kennison nozzle is a constriction to liquid flow of known geometry which will produce a hydraulic head at the area of the constriction. When the nozzle is operating above minimum flow rate (10% of the maximum nozzle flow) the head is essentially linear to flow rate, providing that free discharge exists. Figures 4.1 and 4.2 illustrate a Kennison nozzle and the relationship between flow rate and head.

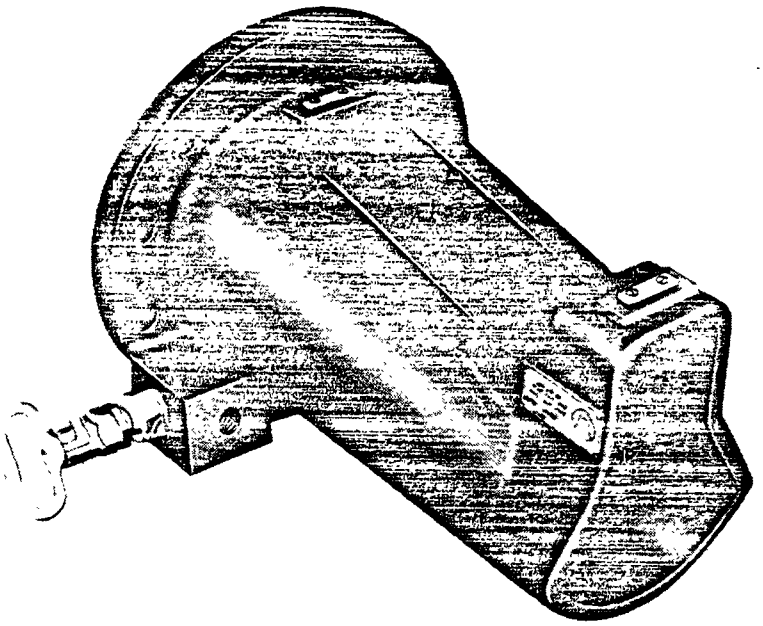

Figure 4.1. Kennison nozzle.

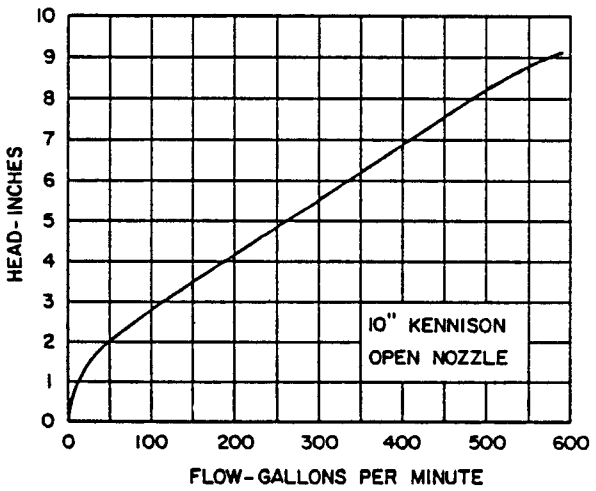

Figure 4.2. Typical rating curve for a 10 in. Kennison nozzle.

The Kennison nozzle is designed to measure flow in partially filled pipes. If high flow conditions fill the pipe, the nozzle will overflow. Any measurements taken during this period will be inaccurate.

For low flow and low head applications, the manufacturer has available a half section Kennison nozzle.

C. Accuracy and Repeatability

The accuracy of the Kennison nozzle is ±2% of actual flow when properly installed and operated between 10 and 100% capacity of the nozzle. At flows of less than 10% of maximum flow accuracy will reduce to ±3 to ±5% of actual flow.

The accuracy of any flow indicator is dependent on the combined accuracy of the nozzle (primary element) and the hydraulic level measuring device (secondary element). An accuracy of ±5% of flow is considered reasonable when recording or indicating flow in the linear operating range of the nozzle.

The manufacturer states that accuracies of ±0.1% can be attained if the nozzle is flow tested in a hydraulics laboratory.

D. Manufactured Options

The Kennison nozzle is a proprietary product of BIF, a unit of General Signal. Available options include:

1. A half section nozzle for measuring flow under low hydraulic head conditions, or lower than standard flow rates.

2. Cast iron or fiberglass material of construction.

3. Pressure tap connection on left or right side of nozzle.

4. Hydraulically operated vent cleaner for remotely or automatically initiated cleaning of the pressure tap.

5. Flow indicator.

6. Stilling well, level float, and transmitter with an output characterized for the nozzle.

7. Upstream spool piece and capacitance probe linearized to the nozzle.

E. Installation

1. Elevate the nozzle invert (bottom) above the level of the downstream surface to ensure free discharge conditions.

2. Level the nozzle in the horizontal plane (lengthwise and crosswise).

3. Install a thick gasket between the nozzle flange and pipe to facilitate leveling.

4. Ensure a uniformly distributed non-turbulent flow by following the manufacturer's recommended approach conditions. They are:

   a. Eight pipe diameters of unobstructed straight pipe upstream of the nozzle.

   b. Slope of the pipe line should not exceed the tabulated limits for the nozzle size selected as indicated in Table 4.2.

   c. Line velocity should not exceed tabulated approach velocities for the nozzle size selected as indicated in Table 4.3.

5. Set the invert of the nozzle flange and the mating pipe flange at the same elevation.

6. Consult the manufacturer's engineering data bulletin for details on the installation of a secondary level measuring system.

TABLE 4.2. LIMITING SLOPE FOR APPROACH PIPING

Nozzle Size (In.)	Slope (Meters Per Meter)
6	0.0070
8	0.0050
10	0.0040
12	0.0033
16	0.0027
20	0.0023
24	0.0021
30	0.0020
36	0.0020

TABLE 4.3. MAXIMUM LINE VELOCITY FOR KENNISON NOZZLE INSTALLATIONS

Nozzle Size (In.)	Maximum Line Velocity (m/sec)
6	0.67
8	0.67
10	0.70
12	0.79
16	0.91
20	1.00
24	1.13
30	1.13
36	1.13

F. Designer Checklist

Use the following checklist when designing or reviewing Kennison nozzle applications. All items should be answered affirmative.

1. Have the manufacturer's rating curves been consulted to assure the selected nozzle size meets the following criteria?

   a. Has the smallest practical size been selected for the anticipated range of flows?

   Refer to the manufacturer's rating curves for the desired nozzle size.

   b. Is the minimum anticipated flow greater than 10% of the nozzle capacity?

   c. Will the pipe be less than full under maximum flow conditions?

2. Is the invert of the nozzle above the downstream liquid level at all times?

3. Is the straight pipe upstream of the nozzle greater than 8 diameters?

4. Is slope of the pipe less than the manufacturer's limits?

5. Is approach velocity within the limits specified by the manufacturer?

G. Acceptance and Performance Monitoring

Install either a pressure gauge or manometer on the zero check tap. Use readings from this indicator to pick the flow from the manufacturer's rating curve.

Other methods for flow verification and testing are described in Section 7.1.

H. Maintenance and Calibration

1. Weekly: Operate the vent cleaner to remove any buildup or obstruction in the pressure tap.

2. Weekly: Measure the hydraulic head manually to determine if calibration of the secondary system is required.

3. Weekly: Inspect the secondary level system and maintain as required.

4. Semiannually: Check for buildup of solids and remove as required.

I. Common Deficiencies

Improper approach conditions constitute the most common problem in the use of the Kennison nozzle; either the slope of the approach piping is too great and/or the approach velocity is too high.

J. References

1. BIF a unit of General Signal. Kennison Open Flow Nozzle. Engineering Data Sheet No. 135.21-1. West Warwick, Rhode Island.

2. Grant, D.M. Open Channel Flow Measurement Handbook. ISCO, Inc., Lincoln, Nebraska, Second Edition, 1981.

4.2 PALMER-BOWLUS FLUME

A. Application

Palmer-Bowlus flumes are normally installed in sewers between sections of pipe. The following general conditions should apply when selecting a Palmer-Bowlus flume.

1. Open channel with round bottom or partially filled pipes (less than 90% filled) where fabrication of a flow transition approach section to accommodate a Parshall flume is not practical.

2. Hydraulic head loss must be minimized.

3. Sediment or solids in the measured stream (velocities in the flume tend to flush away deposits).

4. Variations in the flow rates are expected to be within a 10 to 1 range.

5. The flow entering the flume is subcritical (velocity is less than in the flume throat), non-turbulent, and uniformly distributed.

TABLE 4.4. PALMER-BOWLUS FLUME APPLICATION GUIDELINES

Recommended	Not Recommended
Raw sewage	Sludges Chemicals

B. Principle of Operation

The Palmer-Bowlus flume is a restriction in the channel which produces critical flow through the throat of the flume. This restriction also causes the water to backup upstream of the flume. Figure 4.3 shows the sections of a Palmer-Bowlus flume. The throat cross-section is trapezoidal.

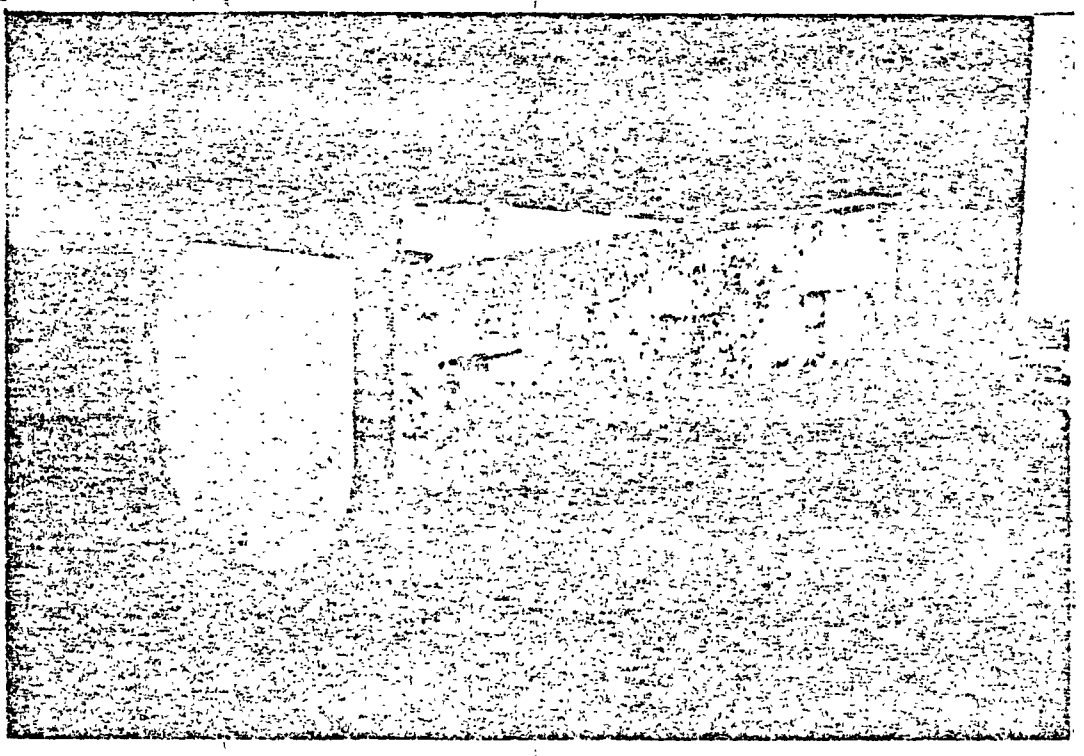

Figure 4.3. Palmer-Bowlus flume.

Flow rate is related to upstream depth.[1] This relationship is derived analytically from an energy balance between the point of depth measurement and the flume throat. The point of depth measurement is about 1/2 pipe diameter upstream from the entrance to the flume (refer to Figure 4.4).

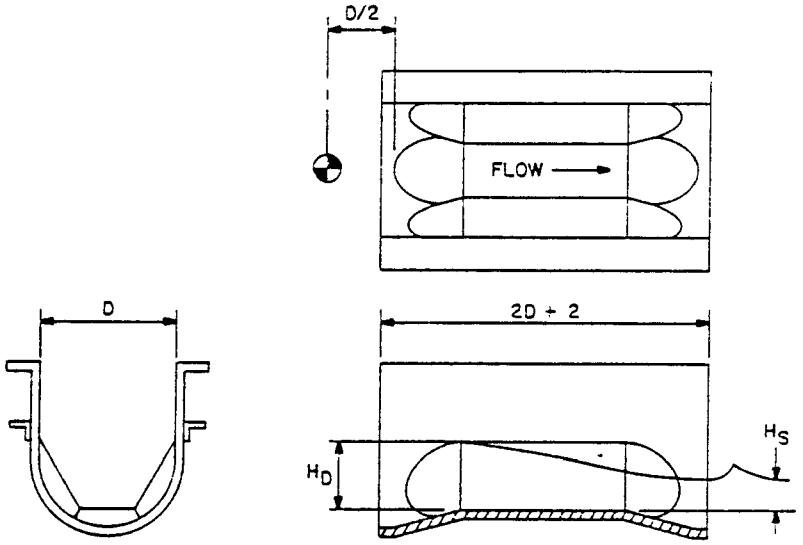

Figure 4.4. Free flow/depth relation.

Palmer-Bowlus flumes are subject to free and submerged discharge conditions. Free discharge will prevail as long as the ratio of downstream to measured depth (H /H) does not exceed 0.90. One reference suggests that the H /H ratio should not exceed 0.85. When the H /H exceeds 0.90, submerged flow exists. Correction factors are not available for submerged flow conditions.

The Palmer-Bowlus flume size is determined by its cross-section diameter. Prefabricated flume liners are available in sizes from 0.1 - 1.5 m (4-60 in). To avoid selecting an oversized flume, care should be taken to base flume size on actual flow rather than nominal pipe.

Two elements are required to measure flow with a Palmer-Bowlus flume. The primary element is the Palmer-Bowlus flume structure; the secondary element is a level measuring device. For additional information on equipment to measure level, refer to Section 5.0 of this handbook.

C. Accuracy and Repeatability

When properly installed, the accuracy of the flume primary element is ±3% of full scale. A given flow differential will produce a relatively small head differential thus requiring a sensitive, accurate level measurement for best results. In operation, the Palmer-Bowlus flume and a level measuring device should produce a combined accuracy of ±10% of full scale.

There are additional sources of error which can add to the inaccuracy of the meter. The principal ones are:

1. Longitudinal slope of the flume floor greater than 1.5%.

2. Any transverse slope of the flume floor.

3. Approach conditions which do not produce a smooth flow with uniform velocity distribution parallel to the center line of the flume.

4. Incorrect zero reference of the level measurement device.

5. Where stilling wells are used (see page 127) connector hole is improperly sized.

D. Manufactured Options

Palmer-Bowlus flumes typically are purchased as a prefabricated liner to be set in concrete or grouted into a half-section of pipe. Some available options include:

1. Material of construction.

2. Alternative configurations:

   a. Basic insert flume.

   b. Flume with integral approach section.

   c. Cutback flume for insertion into a manhole discharge pipe.

3. Flanged ends.

4. End bulkheads to fit in a larger pipe.

5. For flumes with integral approach sections:

   a. Depth gauge flush mounted in the sidewall.

   b. Stilling well connection.

   c. Attached stilling well.

   d. Removable bubbler tube installed in the sidewall.

6. Nested flumes.

   A large flume with a smaller one mounted internally. The smaller flume is removed when flow exceeds its capacity.

E. Installation

1. Install the flume so that the floor of the flume is level longitudinally and laterally.

2. Establish the flume floor elevation to prevent submergence conditions at maximum flow.

3. Plan the flume installation to allow access for inspection to ensure correct elevation and leveling of the floor.

4. Use an approach channel long enough to create a symmetrical, uniform velocity distribution and a tranquil water surface at the flume entrance. A general rule is the greater of either 20 throat widths or 8 pipe diameters of straight run should exist upstream of the flume inlet.

F. Designer Checklist

Use the following checklist when designing or reviewing Palmer-Bowlus flume applications. All items should be verified affirmative for correct application and installation.

1. Has the smallest practical size Palmer-Bowlus flume been selected for the anticipated range of flows?

   a. As a rule of thumb, the flume throat width is one-third to one-half of the pipe diameter.

   b. Another sizing guide is that the maximum flow expected should fall within 70-100% of the maximum capacity for the selected flume size (1, 3).

   c. A minimum depth of 0.15 m (0.5 in) should exist at the minimum actual flow.

2. Is the flume floor elevation sufficient to avert submerged flow conditions?

3. Does a straight channel longer than 20 throat widths or 8 pipe diameters exist upstream of the flume?

4 Will the anticipated upstream flow provide non-turbulent, wave-free approach conditions?

5. Is the upstream approach velocity subcritical?

6. Do any downstream obstructions exist which could restrict the discharge of the flume?

7. Is a reference gauge provided for measuring depth in the flume?

8. Is the point of level measurement correctly located on the flume?

9. Is level sensor zero referenced to the floor of flume at the center line of the throat?

10. If required, is a stilling well provided for level measurement?

    The following items pertain to the stilling well:

    a. Does the vertical height extend below and above the anticipated operating depths in the flume?

    b. Is the flume opening for the stilling well sized large enough to avoid sensor lags and plugging?

    c. Has the flume opening for the stilling well been correctly located on the length of the converging section wall?

    d. Is the flume opening for the stilling well positioned below the operating level at minimum flow?

    e. Is a fresh water purge piped into the stilling well?

G. Acceptance and Performance Monitoring

It is recommended that a depth gauge be mounted upstream of the flume entrance so that manual readings and flow calculations can be made to check remote flow indicators or recorders.

Other methods for flow verification and testing are described in Section 7.1.

H. Maintenance and Calibration

1. Palmer-Bowlus flume.

    a. Weekly, check the depth gauge with other level flow indications for the flume to determine if calibration of the secondary system is required.

    b. Periodically, wipe down the flume walls to remove slime or other buildup.

    c. Check for bottom deposits and remove as required.

    d. Quarterly, check the zero of the reference depth gauge.

    e. Semiannually, examine the flume surfaces for signs of deterioration and wear.

2. Stilling well (if used).

   a. Periodically, check for solids accumulation and clean as necessary (establish the interval between checks by experience).

   b. If purge water is used, check the flow rate daily and adjust as needed.

I. Deficiencies

The following problems are encountered in existing Palmer-Bowlus flume installations.

1. Flume sized too large or small for the operating flow range.

2. Insufficient straight channel upstream resulting in non-uniform velocity distribution through the throat.

3. Excessive transverse or longitudinal slope to the flume floor.

4. Measuring the depth of the hydraulic head at the wrong location.

5. Level sensor zero and the flume floor elevation not equal.

6. Using an incorrect equation for calculating flow from level.

7. No provisions for purging the stilling well when measuring a solids-bearing stream (buildup of deposits in the stilling well renders the level sensor inoperable).

8. The foundation of the flume is not water tight, allowing leakage under or around the flume.

J. References

1. Grant, D.M. Open Channel Flow Measurement Manual. ISCO, Inc., Lincoln, Nebraska, 1981, Second Edition.

2. Metcalf and Eddy, Inc. Wastewater Engineering: Treatment/Disposal/Reuse. McGraw-Hill, 1979.

3. Kulin, G. Recommended Practice For The Use of Parshall Flumes and Palmer-Bowlus Flumes in Wastewater Treatment Plants. EPA-600/2-84-186. Environmental Protection Agency, Cincinnati, Ohio, November, 1984.

4. Flow: Its Measurement and Control In Science and Industry, Volume Two. Instrument Society of America, 1981.

4.3 PARSHALL FLUME

A. Applications

Parshall flumes are suitable for metering flow under the following general conditions:

1. Open channels.

2. Hydraulic head loss must be minimized. Typically, head loss for a Parshall flume head loss is approximately 25% of the head loss for a weir of equal capacity.

3. Sediment or solids in the measured stream (velocities in the flume tend to scour and flush away deposits).

4. Anticipated flow rates will vary widely. Depending on flume size and the accuracy of level measurement, a maximum to minimum flow range of 20 to 1 is reported for Parshall flumes.

5. Approach conditions upstream of the flume will insure that the entering flow is tranquil and uniformly distributed.

TABLE 4.5. PARSHALL FLUME APPLICATION GUIDELINES

Recommended	Not Recommended
Raw sewage	Sludges
Primary effluent	Chemicals
Secondary effluent	
Plant final effluent	
Mixed liquor	

B. Principle of Operation

The Parshall flume is a device for measuring liquid flow in open channels. The Parshall flume is a constriction of the channel that develops a hydraulic head which is proportional to flow. Figure 4.5 illustrates the shape and sections of a Parshall flume.

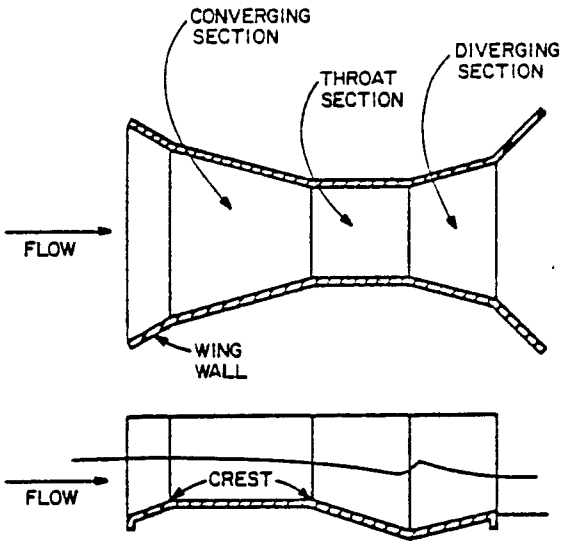

Figure 4.5. Parshall flume flow element.

Parshall flume sizes refer to the width of the throat section. Flumes are available in sizes from 0.025 m (1 in) up to 15 m (50 ft). Large flumes are constructed on site, but smaller flumes can be purchased as prefabricated structures or as lightweight shells which are set in concrete. Dimensions for the fabrication of Parshall flumes are contained in the Water Measurement Manual published by the United States Department of the Interior.

If a Parshall flume has been constructed to standard dimensions and properly set, it is possible to calculate flow through the flume by measuring level at a single point. The location for the level measurement is shown as H in Figure 4.6. Flow is approximately proportional to the three halves power of the hydraulic head. Simplified equations can be found in Reference 2.

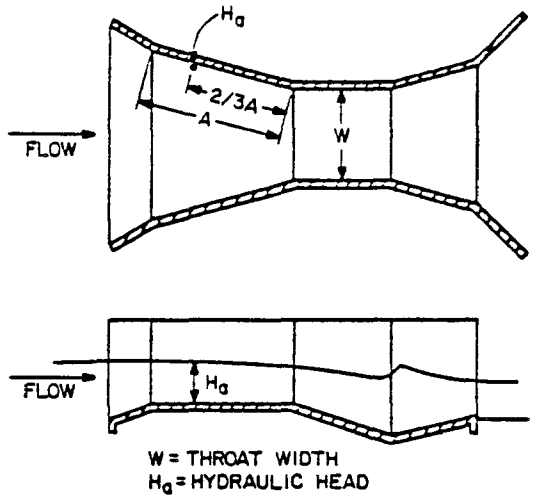

Figure 4.6. Head/width parameters.

Two flow conditions can exist in the Parshall flume: free flow and submerged flow. Free flow exists when the only restriction is the throat width and the water is not slowed by downstream conditions. If the flow through the flume increases sufficiently, this will cause a rising downstream channel level which will impede the discharge from the flume, thereby slowing the fluid velocity. This is known as submerged flow.

It might be expected that the flume discharge would be reduced as soon as the tailwater level exceeds the elevation of the crest. Tests have shown that this is not the case. Free flow conditions can still exist even with some degree of submergence. Figure 4.7 shows the head relationship for free flow. Table 4.6 lists flume sizes and the limits of free flow submergence. For free flow conditions, the depth measurement (H) can be used to calculate the flume discharge flow.

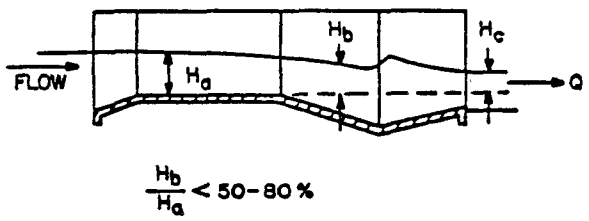

Figure 4.7. Free flow submergence.

TABLE 4.6. SUBMERGENCE LIMITS

Flume Size	% Submergence
0.025, 0.05, 0.075 m (1, 2, 3 in)	50
0.15, 0.23 m (6, 9 in)	60
0.3 - 2.4 m (1-8 ft)	70
3 - 15 m (10-50 ft)	80

Although Parshall flumes can operate with a submergence greater than those shown in Table 4.6, a second level measurement and a correction factor is required to calculate flow. There is a loss of accuracy at submergence, and it is not a recommended design.

Two elements are involved in obtaining a flow measurement with a Parshall flume. The primary element is the Parshall flume structure and the secondary element is the level measuring device. For additional information on methods to measure level refer to Section 5.0 of this handbook.

C. Accuracy and Repeatability

The accuracy of a measurement derived using a Parshall flume depends on the combination of the accuracies of the primary (flume) and secondary (level measurement) elements. For a correctly fabricated and installed flume the estimated accuracy of the depth discharge equation is ±3% of flow. A combined flume and level measurement accuracy of ±5% of flow is attainable with repeatability to ±1/2% of flow.

Additional sources of error, if uncorrected, can decrease the accuracy of the flow measurement. These include:

1. Deviations of the throat width from standard dimensions.

2. Longitudinal slope of the floor in the converging section. Tests on a 0.75 m (3 in) flume demonstrated that a downward sloping floor produced added errors of 3 to 10% from low to high flow conditions.

3. Transverse slope of the flume floor.

4. Approach conditions which do not produce a smooth flow with uniform velocity distribution parallel to the center line of the flume.

5. Incorrect zero reference of the level measurement device to the center line elevation of the crest.

6. If a stilling well is used, the connector hole is improperly sized.

7. Incorrect zero reference of the level measurement device.

D. Manufactured Options

Although Parshall flumes can be constructed on site, most flumes used in wastewater applications are prefabricated structures or liners for setting in concrete. Some available options include:

1. Material of construction.

2. Stilling well connection.

3. Attached stilling well.

4. Depth gauge integrally mounted in the converging section sidewall.

5. A cavity for a characterized capacitance level measuring probe molded into the flume sidewall.

6. Removable bubbler tube installed in the sidewall.

7. A large flume with a smaller one mounted internally. The smaller flume is removed when flow exceeds its capacity.

E. Installation

1. Construct or install the flume so that the floor section is level longitudinally and transversely.

2. Establish the flume floor's elevation to prevent submergence conditions at maximum flow.

3. Plan the flume installation to allow access for inspection of the flume to ensure correct elevation and leveling of the floor.

4. Provide an approach channel long enough to create a symmetrical, uniform velocity distribution and a tranquil water surface at the flume entrance. A general rule is that 10 channel widths of straight run should exist upstream of the flume inlet.

F. Designer Checklist

Use the following checklist when designing or reviewing Parshall flume applications. All items should be verified affirmative for a correct application and installation.

1. Has the smallest practical Parshall flume been selected for the anticipated range of flows?

   a. As a guide, the maximum flow expected should fall within 70-100% of the maximum capacity for the selected flume size (1, 3).

b. A depth of at least 0.15 m (0.5 in) should exist at the minimum actual flow.

2. Is the flume floor elevation high enough (relative to downstream conditions) to prevent submerged flow?

3. Does a sufficient straight run of pipe or channel exist upstream?

4. Will the upstream flow be non-turbulent and wave free?

5. Do any downstream obstructions exist which could cause a restriction to the discharge of the flume?

6. Is a depth gauge included for calibrating the flume?

7. Is the level sensor correctly located on the flume?

8. Is the level sensor zero correctly referenced?

9. If required for the application, is a stilling well provided?

10. The following items pertain to the stilling well:

    a. Is the vertical height extended below and above the anticipated operating depths in the flume?

    b. Is the flume opening for the stilling well sized large enough to avoid sensor lags and plugging?

    c. Has the flume opening been correctly located on the length of the converging section wall?

    d. Is the flume opening positioned below the lowest flow operating level?

    e. If the flume is used to measure raw sewage or mixed liquor flow, has a water purge been piped to the stilling well?

G. Acceptance and Performance Monitoring

A depth gauge mounted on the converging section is recommended so manual readings and flow calculations can be made to check remote flow indicators or recorders.

Other methods for flow verification and testing are described in Section 7.1.

H. Maintenance and Calibration

1. Parshall flume.

   a. Weekly, check the depth gauge with other level flow indications for the flume to determine if calibration of the secondary system is required.

   b. Periodically, wipe down the flume walls to remove slime or other buildup.

   c. Check for bottom deposits and remove as required.

   d. Quarterly, check the zero of the reference depth gauge.

   e. Semiannually, examine the flume surfaces for signs of deterioration and wear.

2. Stilling well (if used).

   a. Periodically, check for solids accumulation and clean as necessary (establish the interval between checks by experience).

   b. If a water purge is used, check it daily and adjust the flow rate as needed.

I. Deficiencies

The following problems are encountered in existing Parshall flume installations.

1. Insufficient straight channel upstream, resulting in non-uniform velocity distribution through the throat.

2. Sloping floor in the converging section.

3. Low flume floor elevation (relative to downstream channel level) resulting in submerged flow condition.

4. Measuring the depth of the hydraulic head at the wrong location.

5. Using an incorrect equation for calculating flow from level.

6. No provisions for purging the stilling well when measuring a solids-bearing stream (buildup of deposits in the stilling well renders the level sensor inoperable).

7. The foundation is not water tight, allowing leakage under or around the flume.

8. Flume sized too large for the operating flow range.

J. References

1. Grant, D. M. Open Channel Flow Measurement Handbook. ISCO, Inc., Lincoln, Nebraska, 1981, Second Edition.

2. Liptak, B. G. and K. Venczel. Instrument Engineers Handbook of Process Measurement. Chilton Book Company, Radnor, Pennsylvania, 1969, Revised, 1982.

3. Water Measurement Manual. U.S. Department of the Interior, Bureau of Reclamation, U.S. Government Printing Office, 1981, Second Edition.

4. Kulin, G. Recommended Practice For The Use of Parshall Flumes and Palmer-Bowlus Flumes In Wastewater Treatment Plants. EPA-600/2-84-186. Environmental Protection Agency, Cincinnati, Ohio, November, 1984.

5. Instrumentation In Wastewater Treatment Plants. Manual of Practice No. 21, Water Pollution Control Federation, 1978.

4.4 WEIR

A. Application

A weir is used to measure flow in open channels where the water is free of suspended solids. Consider the following general conditions when selecting a weir for the primary flow element.

1. Water quality should be equal to secondary effluent or better.

2. Sufficient hydraulic head exists so a weir can be used. Typically, the head loss of a rectangular weir is four times that of a Parshall flume of equal size at the same flow.

3. Flow rates vary over a large range. A range of flows of 20 to 1 can be tolerated by most weirs. For weirs larger than 2.5 m (8 ft), ranges of 75 to 1 are reported. These wide ranges are not recommended.

4. The approach conditions insure that at all flow rates the flow is tranquil, free of eddies or surface disturbance. Under maximum flow, approach velocities in the upstream channel should not exceed 10 cm/s (4 in/s).

TABLE 4.7. WASTEWATER TREATMENT FACILITY APPLICATION GUIDELINES

Recommended	Not Recommended
Secondary Effluent	Raw Sewage
Primary Effluent (with provisions for sluicing)	Mixed Liquor
	Sludge

B. Principle of Operation

A weir is a dam or bulkhead placed across an open channel with an opening on the top through which the measured liquid flows. The opening is called the weir notch; its bottom edge is called the crest. Normally the notch is cut from a metal plate and attached to the upstream side of the bulkhead. This is done to prevent the water from contacting the bulkhead and is known as a sharp-crested weir. See Figure 4.8. Weirs without a plate where the water contacts the bulkhead are known as a broad-crested weir. This presentation concentrates on sharp-crested weirs.

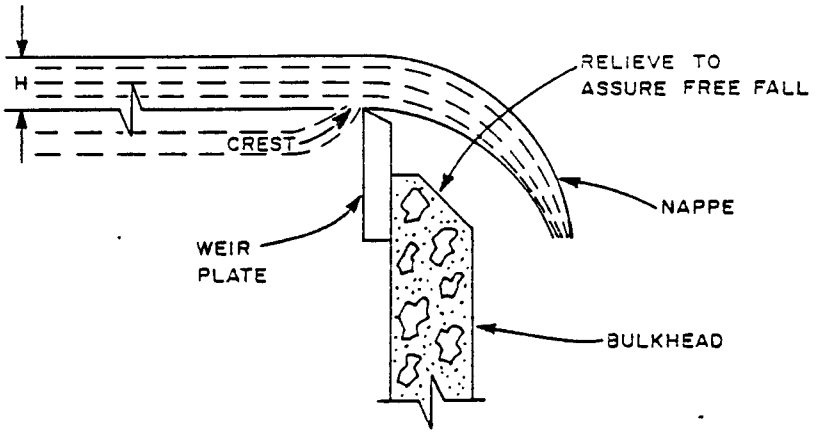

Figure 4.8. Sharp-crested weir.

The water depth measured at a prescribed distance upstream can be used to determine the discharge through the weir. Characteristic head versus flow relationships are governed by the weir geometry. All level measurements are made relative to the crest elevation.

The weir openings are normally fabricated in rectangular, trapezoidal, or V-notch shapes. A trapezoidal weir with a side slope of 4:1 is known as a Cipolletti weir. Figure 4.9 illustrates the weir shapes. Flow as a function of upstream head (h) is expressed by empirical equations. See Figure 4.8. General equations for each weir shape are given below. These are covered in more detail in the technical references (1, 2).

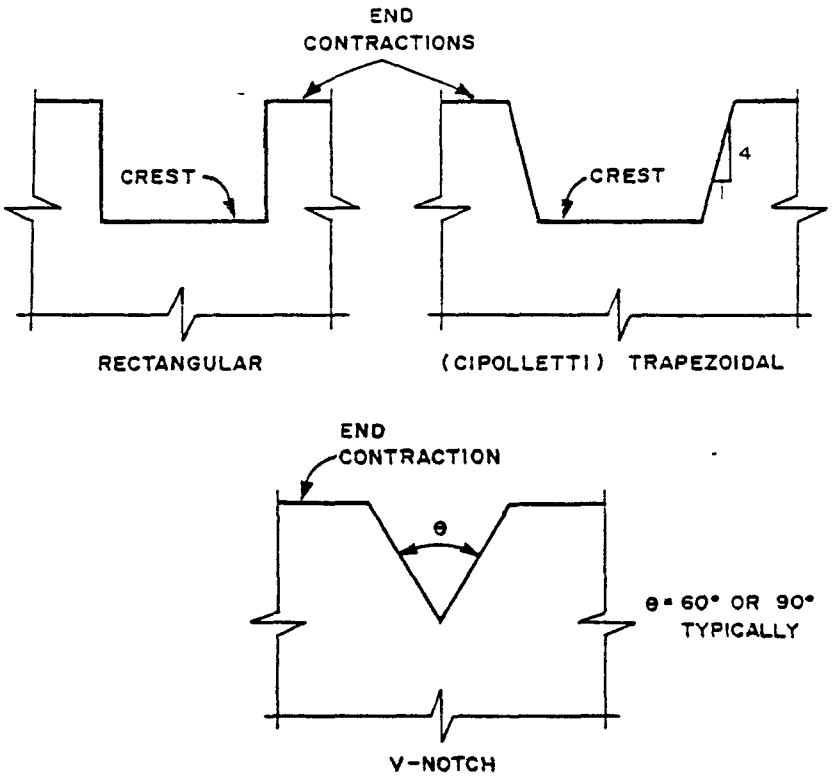

Figure 4.9. Weir shapes.

The following equations show the relationship between flow and the measured head.

For a rectangular weir:

$$Q = K(L-0.2H)H^{3/2}$$

For a Cippoletti weir:

$$Q = KLH^{3/2}$$

For a V-notch weir:

$$Q = K \tan 1/2\,\theta\, H^{5/2}$$

Where:

Q = Rate of flow.
L = Crest length.
H = Head of flowing liquid.
θ = V-notch angle in degrees.
K = Constant dependent the units of flow.

A special rectangular weir without end contractions can be installed with the sidewalls of the channel forming the ends of the weir. This is known as a suppressed weir and is shown in Figure 4.10. When this type weir is applied, an air vent must be installed to allow free access of air beneath the nappe for free flow.

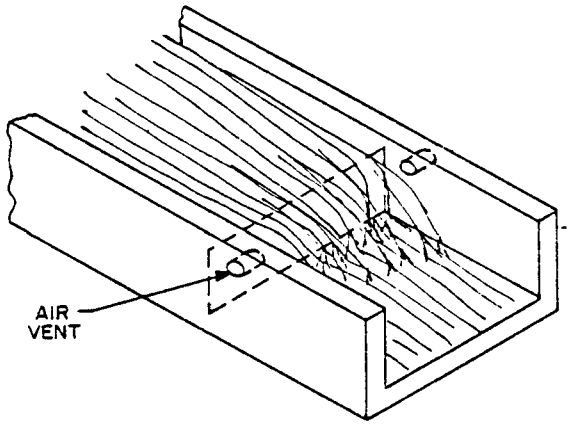

Figure 4.10. Suppressed rectangular weir.

V-notch weirs are suitable for flows up to 17 kl/m (4500 gpm). Rectangular and Cipolletti weirs are capable of measuring much higher flows than the V-notch wier.

C. Accuracy and Repeatability

Accuracy of ±2% for the head versus flow relationship is attainable. However, the weir is a primary element, and the accuracy of flow indicated or recorded flow is also dependent on the secondary elements; i.e., level sensor and flow converter. Therefore, for a properly installed weir and level sensing secondary, it is reasonable to expect a ±5% flow measurement accuracy. Refer to Instrumentation Part 7.0 for more information on selecting and installing level transmitters.

To obtain the best accuracy possible when designing and installing a weir, observe the following factors:

1. The minimum head (see Figure 4.8) should be 6 cm (2.5 in) or greater.

2. The maximum head is less than one-half the height of the weir.

3. When using rectangular or Cipolletti weirs, the maximum head is less than one-half the crest length of the weir.

4. Rectangular and Cipolletti weir crests should be level.

5. Use a V-notch weir for low-flow measurement.

6. All edges and corners of the weir must be sharp.

7. Weir edges should be straight, smooth, and free of burrs.

8. The approach channel should be straight and of uniform cross-section for a length equal to at least fifteen times the maximum head on the weir.

9. The channel should have a free fall of 15 cm (6 in) downstream of the weir.

D. Manufactured Options

The weir is normally fabricated for each installation. Nonetheless, it may be desirable to consider some optional features when fabricating a weir such as:

1. Level sensor stilling well,

2. Depth gauge referenced to the crest elevation, and

3. A sluicing slit with cover located at the bottom of the bulkhead for flushing out solids that may collect behind the weir.

E. Installation

1. Make the upstream face of the bulkhead and weir plate smooth, and install it in a vertical plane perpendicular to the axis of the channel.

2. Insure the crest is level for rectangular and Cipolletti weirs. For a V-notch weir, insure the bisecting line of the V is vertical.

3. Cut the V-notch weir angle precisely and mount the plate so the angle is bisected by a vertical line.

4. Machine or file the weir edges to be straight and free of burrs. Chamfer the trailing edge to obtain a crest thickness of 1-2 mm (0.03 - 0.08 in).

5. Install the weir so the distance from the weir crest to the bottom of the approach channel is the greater of 30 cm (12 in) or two times the maximum head.

6. Design the weir so the end contractions on each side (except suppressed weirs) will be a minimum of 30 cm (12 in) or two times the maximum head.

7. Provide air vents under the nappe on both sides of a suppressed rectangular weir.

8. Rectangular weir sides must be straight up and down.

9. Slope the side of a Cipolletti weir outward 1 horizontal to 4 vertical.

10. Make the crest length of rectangular and Cipolletti weirs at least three times the maximum upstream head.

11. Construct the bulkhead opening approximately 8 cm (3 in) larger on all sides than the weir notch.

12. Slope the top of the bulkhead down to assure that the nappe falls free without hitting the bulkhead.

13. Locate the level sensor next to the sidewall so it can be easily reached.

14. Position the level sensor upstream of the weir at least four times the maximum head to avoid the effect of the drawdown.

15. Install the depth gauge and level sensor so the zero reference elevation is the same as the weir crest elevation.

F. Designer Checklist

Consider the following when designing or reviewing weir applications. All checklist questions should be answered "yes."

1. Is the level sensor located upstream at least four times the maximum weir head?

2. Is the maximum downstream liquid level at least 6 cm (2.5 in) below the elevation of the crest?

3. Is the cross-sectional area of the approach channel at least eight times the cross section of the water overflowing the crest at maximum flow?

4. Is the approach channel straight and of uniform cross section for a length at least fifteen times the maximum head?

5. If a suppressed rectangular weir is being used, has an air vent been provided under the nappe on both sides of the channel?

6. At minimum flow, does the head above the crest exceed 6 cm (2.5 in)?

7. Is the weir notch sized and shaped so the nappe will clear the bulkhead and fall free?

8. Is the length of the bulkhead end contractions on each side of the weir opening at least two times the maximum head above the crest or 30 cm (12 in), whichever is larger?

9. Is the height of the weir crest above the channel bottom greater than twice the maximum head or 30 cm (12 in), whichever is larger?

10. Is the length of the rectangular or Cippoletti weir crest at least three times the maximum head?

11. Is the maximum velocity in the approach channel less than 10 cm/s (4 in/s)?

12. Is a depth gauge installed so periodic checks can be made on the level sensor?

G. Acceptance and Performance Monitoring

A depth gauge mounted adjacent to the level sensor is recommended. Make periodic level readings and determine the flow by calculation or from a lookup table. Compare remote flow readings with the value determined from the visual inspection as a conformance check on the calibration of the level sensor and flow converter.

Other methods for flow verification and testing are described in Section 7.1.

H. Maintenance and Calibration

1. Weekly check:

   a. The level sensor with other level or flow indicators to determine if calibration of the secondary system is required.

   b. Accumulation of bottom deposits and remove as required.

   c. Stilling well (if used) for solids accumulation and clean as necessary.

2. Annual check:

   a. Crest level,

   b. Reference to zero on the depth gauge,

c. Flush fitting of the weir plate to the bulkhead,

d. Leaks around the wier,

e. Weir notch for nicks, dents, and rounding of upstream corners.

I. Deficiencies

The following problems have been encountered in existing weir installation.

1. Insufficient head during low flow conditions so there is no free air space under the nappe.

2. Suppressed rectangular weirs without air vents under the nappe.

3. Insufficient relief on the bulkhead so the nappe strikes the bulkhead interfering with the free fall.

4. Pool level downstream is too high so insufficient free fall exists.

5. Weir notches cut from metal plate stock and installed without the edges finished to proper thicknesses, shape, or straightness.

6. Rectangular or Cipolletti weirs installed without leveling the crest.

7. V-notch weirs with incorrectly cut angles.

8. Level sensor located too close to the weir.

9. Level sensors or gauges not zero referenced to the bottom of the weir notch.

J. References

1. Water Measurement Manual. U.S. Department of the Interior, Bureau of Reclamation, U.S. Government Printing Office, 1981, Second Edition.

2. Grant, D. M. Open Channel Flow Measurement Handbook. ISCO, Inc., Lincoln, Nebraska, 1981.

5.0 LEVEL MEASUREMENT

5.1 BUBBLER LEVEL MEASUREMENT

A. Applications

Bubbler level measurement instruments are used throughout the wastewater treatment process for measuring both liquid level and differential liquid level.

Bubblers are frequently used to sense the hydraulic head created by flumes and weirs in open-channel flow measurement. A special signal converter indicates flow based on the level sensed by a bubbler. This section of the manual addresses the use of bubblers in open tanks which is applicable to open-channel flow measurement.

TABLE 5.1. BUBBLER LEVEL MEASUREMENT APPLICATION GUIDELINES

Recommended	Not Recommended
Liquid treatment processes	Digesters Volatile chemical storage tanks

B. Principle of Operation

An open-ended pipe, called the bubbler tube or dip tube, is connected to an air supply and positioned in the process so that the open end is set at a reference level. A constant air rate-of-flow regulator is used to maintain air in the tube with enough excess to continually bubble out the open end. Thus, the air pressure in the pipe is equal to the head of the process liquid above the reference level.

A pressure transmitter connected to the bubbler tube measures the pressure of the dip tube. For water, the level is equal to the pressure sensed by the transmitter. For measuring other liquids, the transmitter must be calibrated for that liquid's specific gravity. For closed tanks, a differential pressure transmitter is used, with the high-pressure port connected to the bubbler tube and the low-pressure port connected to the gas space in the top of the tank. A schematic of the bubbler application is shown in Figure 5.1.

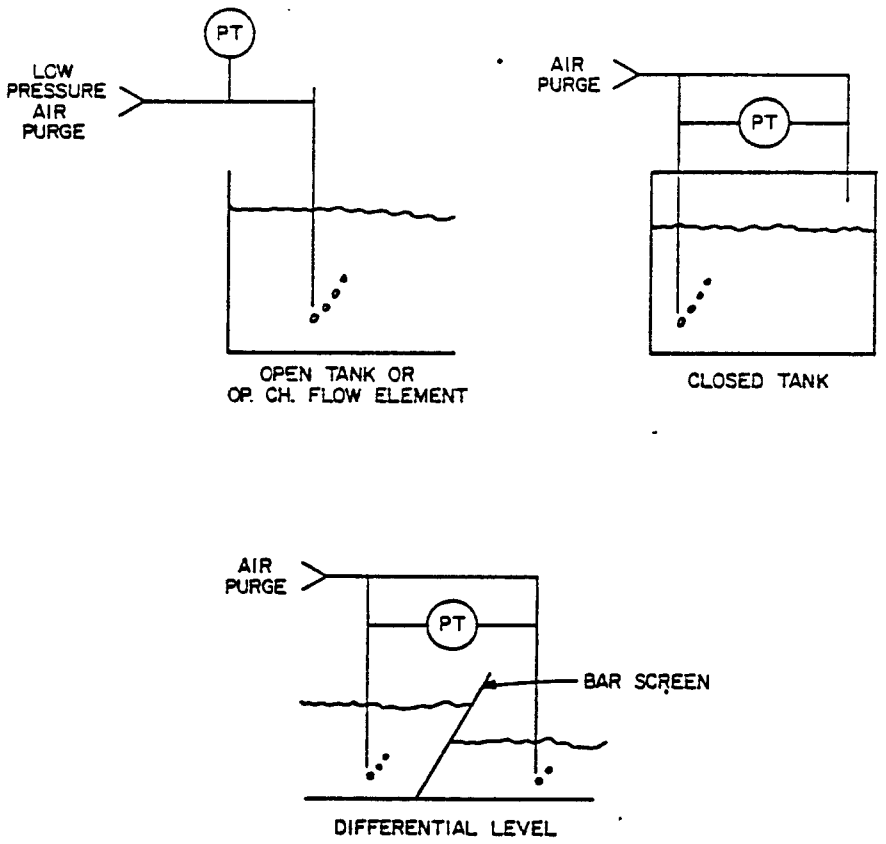

Figure 5.1. Typical bubbler applications.

Because of head loss caused by air flow in the tube and connecting pipe, pressure at the transmitter will not be exactly the same as at the open end of the bubbler tube. This difference in pressure necessitates minimizing pipe and fittings between the rate-of-flow air regulator and the dip tube.

Airflow head is affected by bubble formation. To minimize errors, the bottom of the tube usually has a notch or an angular cut to produce a continuous stream of small equally sized bubbles. Buildup of process solids on the end of the tube will alter bubble formation; therefore, the tube end must be kept clean.

The air supply rate is controlled by a pressure regulator and a flow control valve. Typical airflow rates are 8-30 cc/s (1-4 cfh). Use a purge-rotameter to adjust the airflow. The air supply can be from instrument air, plant air, compressed gas tanks, or dedicated bubbler compressor. For applications requiring infrequent level readings, a hand-operated pump can be used.

C. Accuracy

The accuracy of a level measured by a bubbler system is dependent on the uncertainty of the pressure measuring device (see Section 6.2), process fluid specific gravity, head loss in the bubbler system, barometric pressure, and the temperature of both the process fluid and the bubbler system air. While errors of less than +0.1% can be achieved, accuracy is typically ±0.5-1% of full scale.

D. Repeatability

Repeatability is dependent on variances from standard conditions of any of the uncertainties listed above in paragraph C.

E. Manufacturer's Options

1. Automatic purge cycle.

A separate timer and valve control package for periodic cleaning of the bubbler tube. A high pressure air purge removes buildup of material at the end of the tube when the pressure measuring device is momentarily isolated from the system and full air supply pressure is applied to the bubbler tube at periodic intervals from 8 to 24 hours.

2. Air supply.

Bubbler systems can be furnished with a dedicated air supply consisting of:

a. A compressor, or where extra reliability is required, two compressors with automatic failover. Intermittent duty compressors, capable of producing the high pressure purge required, range from 180 W (1/4 hp)-370 W (1/2 hp). Adequate purge pressure for most wastewater applications is about 500 kPa (60 psig).

b. An air dryer.

c. An air filter.

d. A pressure tank with a capacity of about $0.01m^3$ (2 gal.).

3. Enclosure.

a. NEMA 1, general purpose.

b. NEMA 4, watertight.

4. Purge gases.

Where the oxygen contained in an air supply system is objectionable, nitrogen or another inert gas may be substituted. For explosive, volatile, or hazardous atmospheres complete intrinsic safety can be achieved by using a pneumatic pressure signal for remote indication.

5. Weatherization.

Usually a thermostatically controlled heater.

6. Alarms.

Available alarms include low air flow, low air supply pressure, purge-in-progress, and compressor failure.

F. Installation

The bubbler tube should be rigidly supported at a convenient location in the tank. The opening of the tube is the lowest level that can be detected, so set the tube depth at or below the lowest level at which a measurement is needed. Notch the tube opening to produce a continuous flow of small bubbles.

Fabricate the bubbler tube from 1.25 cm (1/2 in.) diameter stainless steel tubing or galvanized pipe. Properly supported, this makes a rigid installation which can withstand turbulence and wave action. A tee with one branch plugged, when installed on top of the bubbler tube, provides an opening for a cleaning rod when the high pressure air purge cannot remove bubbler tip restrictions.

The bottom of the tube should be at least 8 cm (3 in.) from the tank bottom to avoid solids buildup on the tank floor. This offset must be included in the zero reference level for the liquid in the tank. An exception to this is a bubbler installed in a flume or ahead of a weir. In flume applications the bubbler tip must be at the same elevation as the flume floor or if elevated, the degree of elevation must be compensated for in the flow calculation. In weir applications the bubbler tip must be at the same elevation as the bottom of the notch, or if below the notch, the degree of offset must be compensated for in the flow calculation.

To minimize level measurement errors caused by air flow head loss, the air flow controller must be mounted as close to the dip tube as possible and connected with a minimum of fittings and tubing. For 1 cm (1/4 in.) tubing, the distance from the air purge regulator to the bubbler tube should not exceed 15 m (50 ft).

To ensure that the air purge tubing is free from traps where moisture condensate can collect, install the tubing with a continuous downward slope from the pressure transmitter and the air flow controller to the bubbler tube.

In open tanks and flumes, for periodic reference checks and to facilitate recalibration if the tube is removed for cleaning or replacement, install a depth (staff) gauge in the tank at a location visible from the dip tube. Zero on this gauge must correspond to the bubbler tube's zero reference.

A typical installation schematic is shown in Figure 5.2. Maintenance access is needed for the clean-out tee and for the bubbler system enclosure. Installation of the differential pressure transmitter is addressed in Section 6.2.

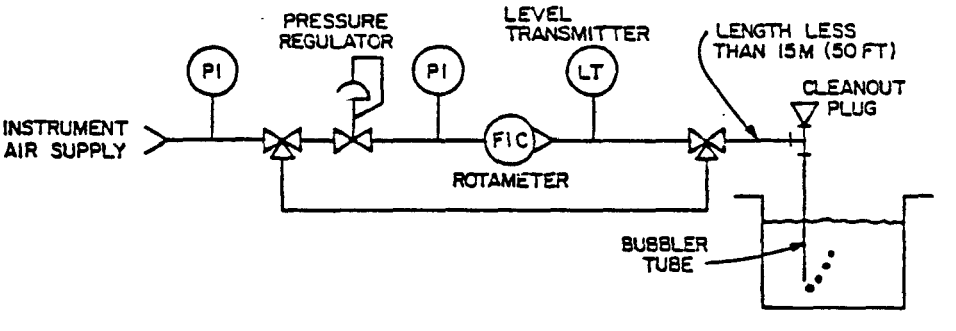

Figure 5.2. Open tank bubbler installation.

G. Designer Checklist

Ask the following questions when designing or reviewing bubbler level meter applications. All checklist questions should be answered "yes."

1. Can air be passed through the process fluid? If not, can another gas, such as nitrogen, be substituted for air?

2. Is the tank open or vented? If not, is accumulation of air acceptable?

3. Are head losses from the air flow regulator to the bubble tube minimized?

4. Is the purge line length from the air flow regulator to the bubbler tube less than 15 m (50 ft)?

5. For process streams containing more than about 100 mg/l suspended solids, is automatic purging included?

6. Does the air supply reliability match the need for level measurement reliability?

7. Is the bubbler tube mounted securely?

8. Is the clean-out tee accessible?

9. Is the bubbler enclosure suitable for its environment?

10. For open tanks, does the pressure transmitter reference the same gas space? For example, a bubbler tube mounted outside and a transmitter mounted inside a building will be exposed to different atmospheric conditions. Can this difference be tolerated?

H. Maintenance and Calibration

Maintaining and calibrating the differential pressure transmitter is presented in Section 6.2.

Task	Frequency
1. Check Air flow.	Daily, or if the unit has a low-flow alarm detector, only at calibration.

2.	Clean tube.	Weekly purge for solids-bearing fluids. Manual cleanout at calibration. Manual cleanout when tube is depressurized and fluid enters.
3.	Check air filter.	Weekly. If the unit has a low-flow alarm detector, then check filter only at calibration.
4.	Calibrate.	Every two months.
5.	Inspect compressor.	Depends on type and size of compressor. Follow the manufacturer's recommendation.

I. Deficiencies

The following problems are commonly reported for bubbler systems.

1. Compressor failure, and measurement loss.

2. Tube bubbler opening does not stay clean because no purge or cleanout is available.

3. Condensate collection trapped in the purge tubing.

4. Purge tubing lines too long or too small, creating excessive head losses.

5. The bubbler tube tip does not correspond with the desired zero level reference.

J. References

1. Liptak, B. G. and K. Venczel. Instrument Engineers Handbook. Chilton Book Company, Radnor, Pennsylvania, 1969, Revised, 1982.

2. American Petroleum Institute. Manual On Installation of Refinery Instruments and Control Systems, Part I, Section 6 - Level. Washington, DC, 1974, Third Edition.

5.2 CAPACITANCE PROBE

A. Applications

Capacitance probes are used to measure liquid levels throughout wastewater treatment plants. For this discussion, two kinds of probes are identified: capacitance and capacitance with compensation for coating. The compensated capacitance probes have additional electronics to offset material buildup on the probe.

Special probes are available that produce a signal proportional to flow in open channel flumes and weirs. These probes are characterized to match the head/flow relationship of an open channel primary element. Characterization is accomplished either of two ways: one, by electronic calculation, or two, by variation of probe insulation thickness in a manner that produces a direct, linear relationship between capacitance and flow. Consult with manufacturers on special capacitance probes for direct flow measurement.

TABLE 5.2. UNCOMPENSATED CAPACITANCE PROBES
WASTEWATER TREATMENT FACILITY APPLICATION GUIDELINES

Recommended	Not Recommended
Potable water	Primary treatment
Non-coating chemicals	Secondary treatment
Tertiary effluent	Tertiary treatment
	Solids handling
	Polymer solutions
	Lime slurry

TABLE 5.3. COMPENSATED CAPACITANCE PROBES
WASTEWATER TREATMENT FACILITY APPLICATION GUIDELINE

Recommended	Not Recommended
Most aqueous solutions	Liquids where heavy grease buildup could occur
Raw sewage	
Secondary effluent	

Capacitance probes can also be used to measure the level of dry material. However, this discussion deals with only wastewater treatment solution applications.

B. Principle of Operation

A capacitor can be described as two electrically conductive plates separated by a nonconductive material. A probe is usually constructed to form one plate of a capacitor. The other plate is the tank wall or the measured solution. Between the probe and the tank wall is an air space above the liquid surface and water below. As the water level rises, the effective capacitance of the system increases. This capacitance is linearly proportional to level and is measured by a bridge circuit powered by a high frequency, 0.5-1.5 MHz, oscillator. High frequency can reduce errors due to shorting of the capacitor by conductive coatings. Sometimes capacitance probes are referred to as radio frequency (RF) probes because of this measurement technique.

Water in treatment processes is a good conductor. For this reason, the probe must be insulated. The insulation's exterior surface effectively becomes a third plate which complicates the theory of operation. Figure 5.3 shows one way of illustrating the system in electrical terms.

The situation becomes more complex if a conductive coating of process solids accumulates on the probe. Through a combination of capacitance and conductance effects in the coating, the probe fails to respond to changes in level below the top of the coating. The system's effective capacity remains constant below this point. Thus, for most applications in wastewater treatment some method of compensating for coatings is essential.

One method is based on assuming that the coating's capacitive reactance is equal to its resistive reactance. The coating's resistance is further assumed to be the greatest resistance in an aqueous system. This resistance is measured and subtracted from the effective capacitance. The result is proportional to liquid level, although inaccuracies are introduced depending on how well the system matches the assumptions made.

The probe is usually a cylindrical rod or cable inserted perpendicular to the water surface, as illustrated in Figure 5.4.

Probes are available for use in open channel head loss type flow meters. These probes are flat and shaped to provide a signal proportional to flow. In either style probe, accuracy decreases near the bottom because the submerged portion becomes less and less like the ideal capacitor with plates of infinite length.

C. Accuracy and Repeatability

For a clean probe, an accuracy of $\pm 1\%$ can be expected. Where the probe becomes coated, accuracy will degrade to approximately $\pm 5\%$.

D. Manufacturer's Options

1. Probe type:

   a. Rods of any length up to 6 m (20 feet),

   b. Cables of any length up to about 50 m (150 feet) with weight or anchor to keep probe in place,

   c. Flat probes for open channel flow meters, and

   d. Proximity plate for non-contact with process fluids.

2. Transmitter enclosure:

   a. NEMA 3 - weatherproof, or

   b. NEMA 4 - watertight.

3. Indicating meter.

4. Output:

   a. 4-20 mAdc, or

   b. 10-50 mAdc.

5. Probe materials:

   a. 304 stainless steel,

   b. 316 stainless steel,

   c. Teflon insulator,

   d. Polyvinylidene fluoride insulator, or

   e. Polyvinylchoride insulator.

6. Grounding rods.

7. Concentric probe. Required for non-conductive liquids and for some installations to provide grounding or shielding from process liquid turbulence.

8. Radio frequency interference protection.

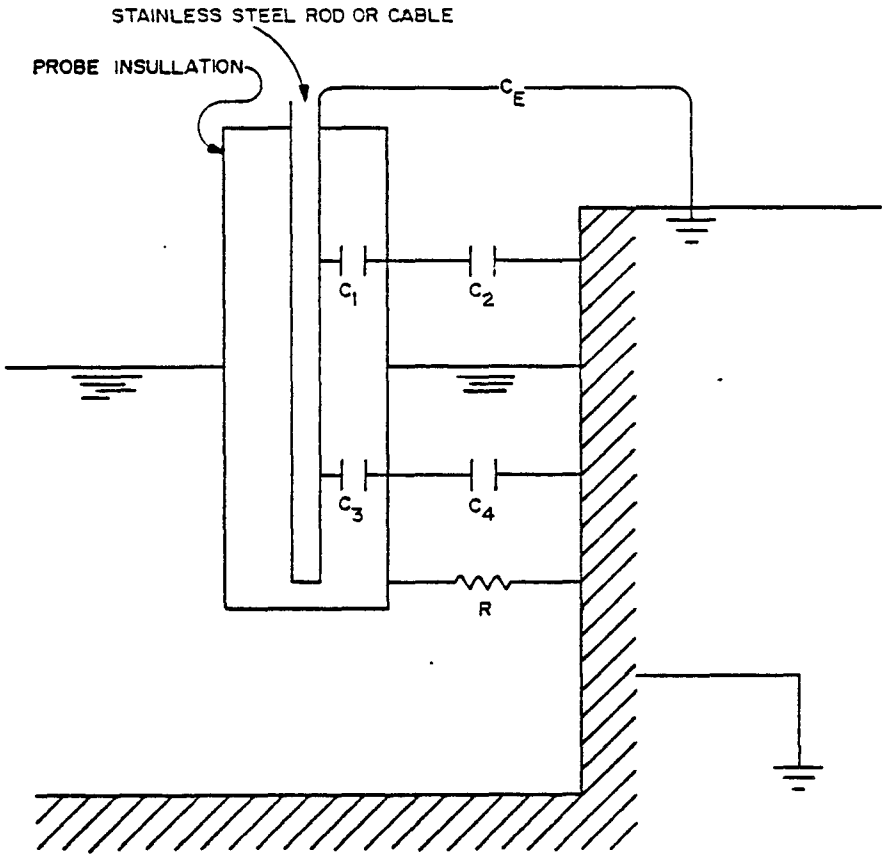

Figure 5.3. Illustration of probe/tank capacitive relationship.

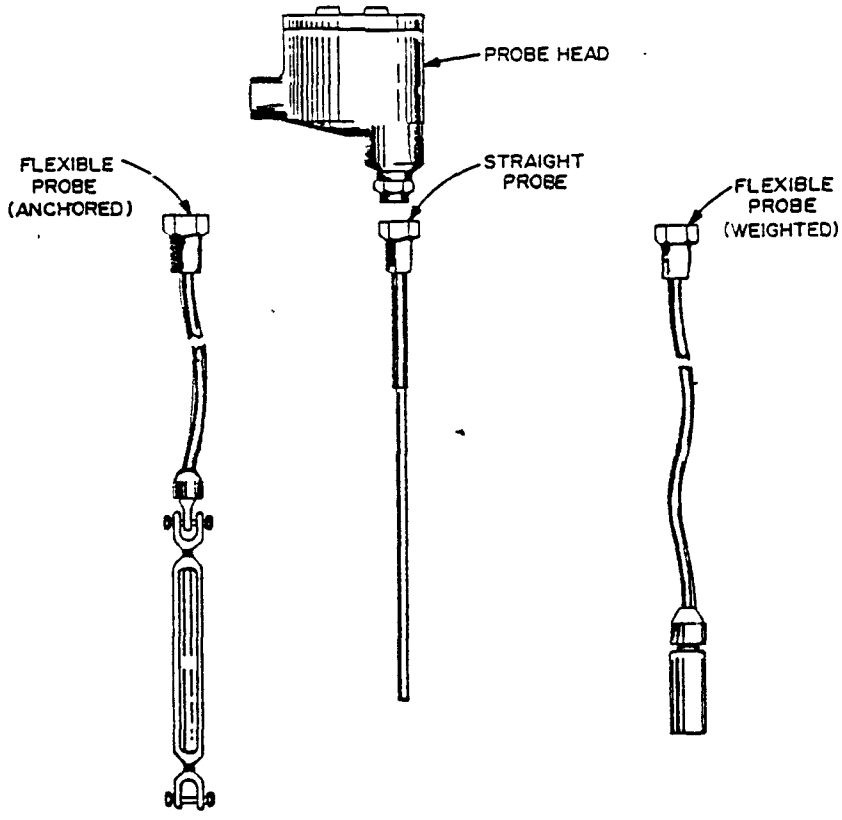

Figure 5.4. Capacitance level sensor.

E. Installation

1. Install the probe as follows:

   a. Isolate from vibration and possible physical damage.

   b. Do not mount in the direct stream of process flow. If necessary, install baffles or stilling well.

   c. Mount vertically.

   d. Mount at least 15 cm (6 in) from tank wall to lessen chances of material buildup.

   e. Mount so that probe can readily be removed for cleaning, inspection, or calibration.

2. Most manufacturers require the transmitter be within 75 m (250 ft) of the probe. The cable must be furnished by the capacitance probe manufacturer and should not be shortened in the field without consulting the manufacturer. Mount the transmitter close enough to the probe to see indicator change as level changes to allow one person to calibrate the system. If the transmitter is mounted further than this, provide a junction box near the probe. Allow enough cable between the junction box and probe for removing the probe. Provide storage space for excess cable. Cable from the junction box to the transmitter should be in regid conduit and from the junction box to the probe in flexible conduit.

3. Refer to the installation shown in Figure 5.5.

4. In an open tank, install a depth (staff) gauge in the tank at a location visible from the transmitter so periodic checks can be made on the calibration. Zero on this gauge must correspond to the probe's zero reference.

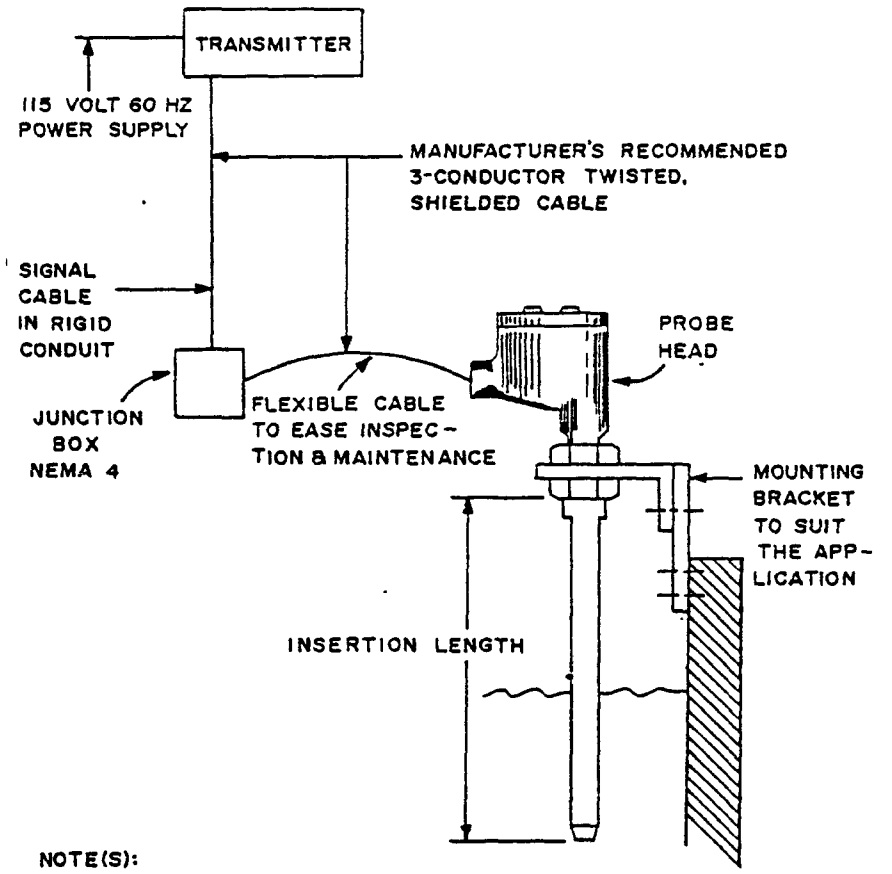

NOTE(S):

1) MOUNT THE PROBE TO MINIMIZE COATING AROUND THE MOUNTING THREADS.
2) MOUNT THE PROBE SO IT IS NOT IN THE DIRECT STREAM OF A FILLING CHUTE OR NOZZLE. IF REQUIRED, USE DE-FLECTING BAFFLES.
3) USE CARE DURING INSTALLATION TO PREVENT ACCIDENTAL DAMAGE TO THE PROBE INSULATION

Figure 5.5. Capacitance probe and transmitter installation.

F. Designer Checklist

Ask the following questions when designing or reviewing capacitance level measurement applications. All checklist questions should be answered "yes."

1. Is the process stream free from heavy grease? If not, capacitance probes are not recommended.

2. Is coating of the probe likely? If yes, then coating compensation is essential.

3. Is the tank or tank wall grounded? If not, then provide grounding.

4. Is the probe mounted securely, without providing potential sites for solids buildup?

5. Can the probe be removed easily for inspection, cleaning, and calibration?

6. Is the meter installation designed so that it can be calibrated by one person?

7. Is the transmitter protected from the weather?

8. Has a depth gauge been installed for quick calibration checks?

G. Maintenance and Calibration

Task	Frequency
1. Clean probe.	Depends on application.
2. Calibrate probe.	Once a month to once every two months.

H. Deficiencies

The following problems are often encountered in capacitance probe applications.

1. Coating causes meter to measure level inaccurately. Clean probe more frequently.

2. Tank not grounded signal noise and calibration drift.

I. References:

1. Liptak, B. G. and K. Venczel. Instrument Engineers Handbook. Chilton Book Company, Radnor, Pennsylvania, 1969, Revised, 1982.

2. Schuler, E. A Practical Guide to RF Level Controls. Drexelbrook Engineering Co., Horsham, Pennsylvania, 1981.

5.3 FLOAT LEVEL INSTRUMENTS

A. Application

1. Float type level indicators are often used in wastewater treatment plants if remote readout is not needed.

2. Float type level switches are generally used in wastewater treatment processes for alarms and equipment on/off control.

TABLE 5.4. FLOAT LEVEL INDICATORS
WASTEWATER TREATMENT FACILITY APPLICATION GUIDELINE

Recommended	Not Recommended
Potable water tanks	Process streams
Fuel tanks	
All process streams	

B. Principle of Operation

1. Level indicator.

A float level indicator consists of a float, an attached rod with pointer, float guide and indicator scale. These components are shown in Figure 5.6. As the float rides up or down on the liquid surface, the pointer indicates the level.

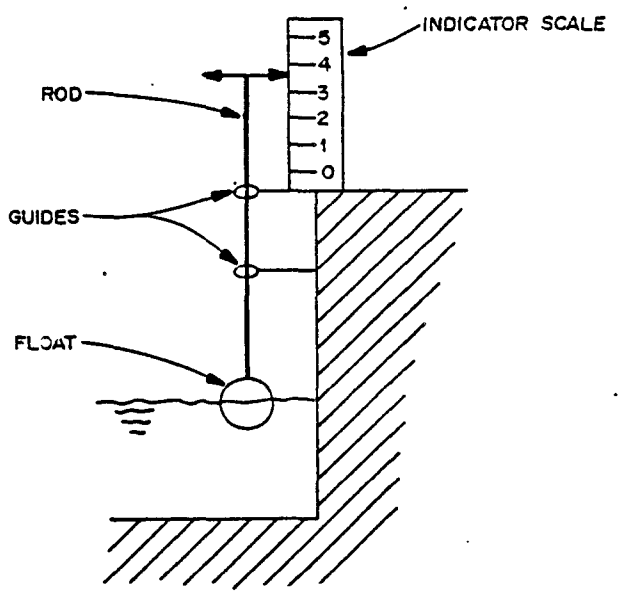

Figure 5.6. Simple float level indicator.

Another type of float level indicator is shown in Figure 5.7. In this case, float movement is indicated by the counterweight position.

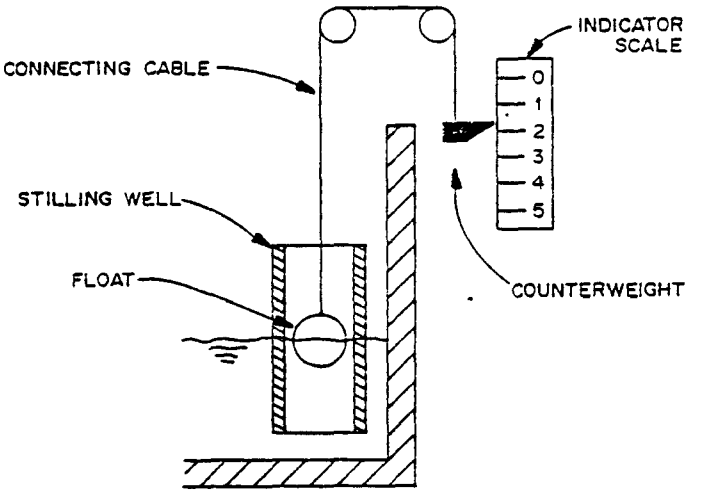

Figure 5.7. Counterweighted float level indicator.

Floats can also be connected to transmitters for remote monitoring. However, this arrangement is seldom used. Some other type of level meter such as bubbler, capacitance, or sonic is used instead.

2. Level switch.

Float switches depend on the liquid's bouyant force to activate the switch. In one switch position the float is bouyed up by the liquid; in the other position the float hangs down in the absence of liquid.

A wide variety of float devices exist which translate the float position into electrical on/off signals. The Instrument Engineers' Handbook[1] has a summary of them. Of these devices, the majority of wastewater treatment plant applications use the tilt switch type shown in Figure 5.8. Each switch is a bouyant bag with a mercury switch inside. When the bag is tilted from one position to the other, the mercury switch opens or closes an electrical circuit. This circuit activates a relay to provide the contacts necessary for local controls and remote monitoring.

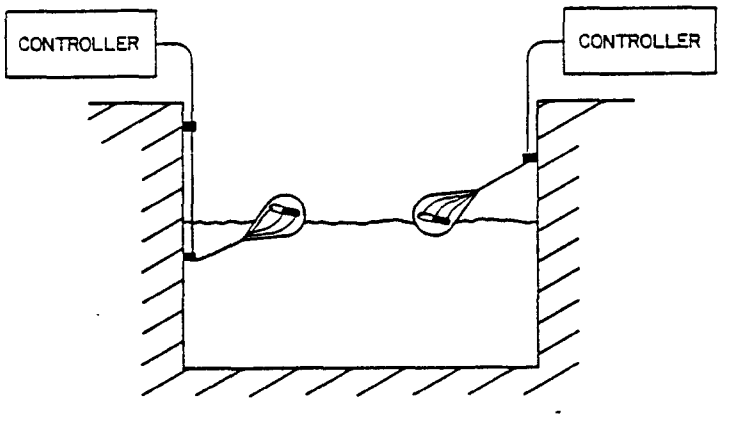

Figure 5.8. Float switches.

C. Accuracy and Repeatability

Accuracy for float devices monitoring quiescent liquids can be ±0.6 cm (1/4 in). Turbulence has an adverse affect on accuracy. Most float switch (tilt type) installations leave 8-16 cm (3-6 in) of cable between the bag and the tie down to allow freedom of movement of the bag for maximum sensitivity. Turbulent conditions have been observed to cause inaccuracies greater than 10 cm (4 in).

Solids buildup on guides and floats will degrade the accuracy of float indicators. Therefore, applications having potential for turbulence or solids buildup are not recommended.

D. Manufacturer's Options

1. Controller enclosure:

   a. NEMA 12, dustproof, and

   b. NEMA 4, weatherproof.

2. Output:

   a. DPDT contacts rated at 5 amp, 120 VAC.

E. Installation

A recommended installation method for float switches is shown in Figure 5.9. If turbulence is expected, also install a stilling well.

The installation figure shows the floats permanently fixed to a specific level. This is true of most float switch installations. The switch setting cannot be easily changed, so carefully design initial placement.

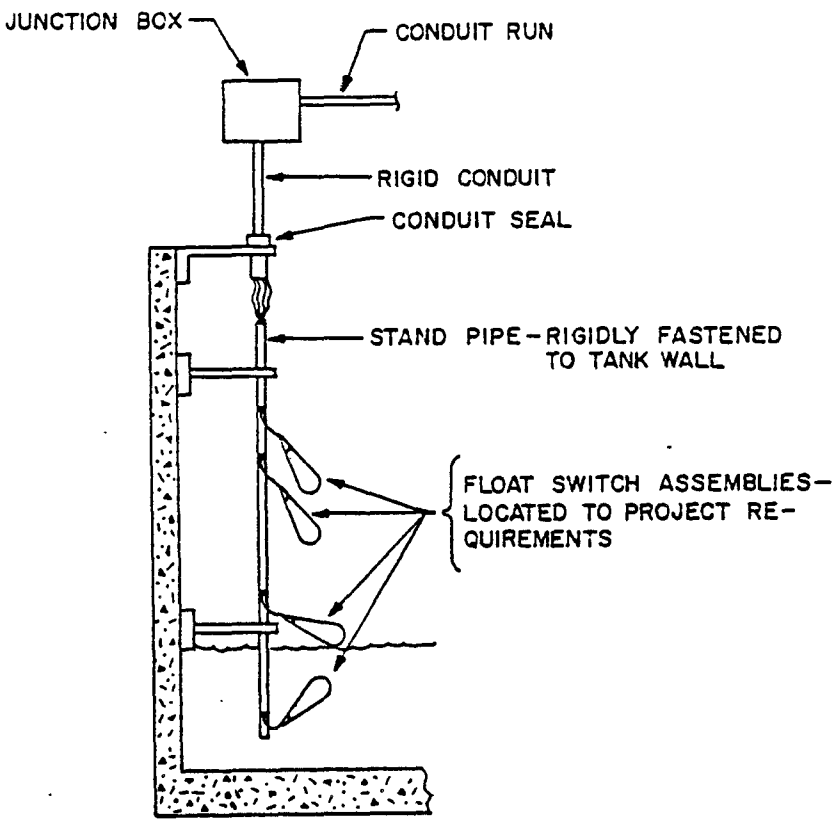

Figure 5.9. Float switch mounting installation.

F. Designer Checklist

The following questions should be asked when designing or reviewing applications of float level instruments. All checklist questions should be answered "yes".

1. Will the float be bouyant at process pressure? Temperature?

2. Is the float protected from turbulence?

3. Is the output matched to its intended uses?

4. Are switch settings accurately known?

5. Are switches sheltered from strong air currents?

G. Maintenance and Calibration

1. Level indicators:

Task	Frequency
a. Calibration.	Depends on mechanical or electrical linkage to indicator.
b. Stilling well cleaning.	Weekly to bi-weekly.

2. Level switches:

Task	Frequency
a. Inspection and operational check.	Every six months.
b. Stilling well cleaning.	Weekly to bi-weekly.

H. Deficiencies

The following problems are commonly reported for float level devices.

1. Stilling well cleaning requires too much attention.

2. Switches give false trips due to turbulence.

3. Solids buildup on the float changes the calibration.

I. References

1. Liptak, B. G. and Venczel, K. Instrument Engineers Handbook. Chilton Book Company, Radnor, Pennsylvania, 1969, Revised, 1982.

2. Instrumentation in Wastewater Treatment Plants; Manual of Practice No. 21. Water Pollution Control Federation, 1978.

5.4 SONIC AND ULTRASONIC LEVEL SENSORS

A. Application

Sonic and ultrasonic level sensors do not contact the process fluid; therefore, they can be used in any wastewater treatment process, provided that process vapors do not cause problems. The two most common vapor problems are corrosion, which can be lessened by choice of materials, and condensate or ice buildup on cold sensors which can be prevented by heaters.

TABLE 5.5. SONIC AND ULTRASONIC LEVEL SENSORS APPLICATION GUIDELINES

Recommended	Not Recommended
Open channel flow	Foam
Wet wells	

B. Operating Principle

The sensor periodically generates a pulse of sonic or ultrasonic waves that bounce off the liquids surface and echo back. The echo is detected by a resonant metal disc. Based on the speed of sound or ultrasound, the time between sending and receiving is measured and converted into distance which is then converted to level. See Figure 5.10.

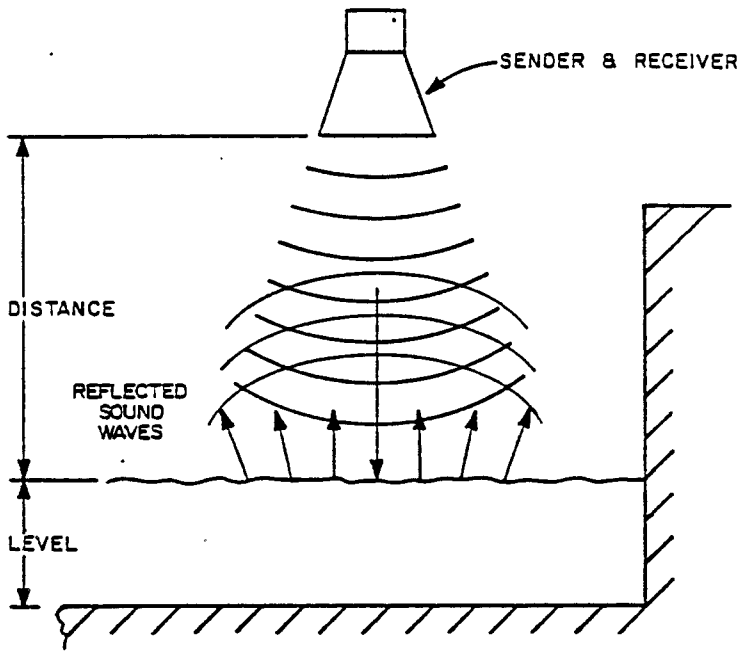

Figure 5.10

Sonic and ultrasonic wave velocity depends on air conditions: temperature, pressure and humidity. Where changing conditions are expected, automatic compensation can be provided. Typically, only temperature compensation is used; temperature errors are about 0.2% per °C (0.17% per °F).

Sensors are available with frequencies from about 9 kHz sonic to about 50 kHz (ultrasonic). Also, the generator can have different shapes such as wide angle cone, narrow angle cone or parabolic. Selection of frequency and sensor shape are both based on the amount of attenuation expected. For example, one manufacturer provides:

- Wide angle cones for up to 3m (10 ft).
- Narrow angle cones for up to 10m (30 ft).
- Parabolic reflectors for up to 25m (80 ft).

Signal attenuation can be caused by absorption into the air, reflection away from the receiver's sensing area, and absorption by foam on the liquid surface. The cone shapes listed above are selected to reduce attenuation by reflection. Distance and wave frequency affect attenuation by absorption. As distance from the sensor to the liquid level increases, signal strength decreases in proportion to the distance squared. Thus, if signal strength is 100% at distance "d" when a tank is full, the signal strength will drop to 25% at a distance of "2d".

Sonic waves attenuate less then ultrasonic. For example, foam on liquid surfaces may completely absorb ultrasonic waves.

C. Accuracy and Repeatability

Accuracy of ±1% of span and repeatability of ±0.1% of span can be obtained. Air conditions, liquid turbulence, foam and interfering echos from obstructions can reduce both accuracy and repeatability of the sensor.

D. Manufacturers' Options

1. Sensor wave frequency:

   a. Sonic.

   b. Ultrasonic.

2. Sender shape:

   a. Wide cone.

   b. Narrow cone.

   c. Parabaloid.

3. Sensor temperature compensation.

4. Sensor thermostatically controlled heater.

5. Sensor air purge.

6. Sensor range selection.

7. Indicator on transmitter.

8. Transmitter output:

   a. 4-20 mAdc into 750 ohms maximum, isolated.

   b. 0-20 mAdc into 750 ohms maximum, isolated.

9. Transmitter enclosure:

   a. NEMA 1,

   b. NEMA 4, and

   c. NEMA 12.

E. Installation

1. Range.

Determine the range of the meter from expected conditions in the tank or channel. See Figure 5.11. The mounting location of the sensor is then calculated from restrictions established by the manufacturer. Generally, the sensor must be above the maximum level by at least some minimum distance, usually about 50-70 cm (18-24 in). In Figure 5.11, this would correspond to an "A-MINIMUM" value. The distance from the sensor to the lowest level measured must be less than its maximum rating for "C", and the ratio of "A:C" must be less than the manufacturer's specification.

The sensor must be mounted far enough from tank walls to prevent false echoes. This distance, "D", depends on sender shape. Calculations for correct sensor location will differ for each manufacturer.

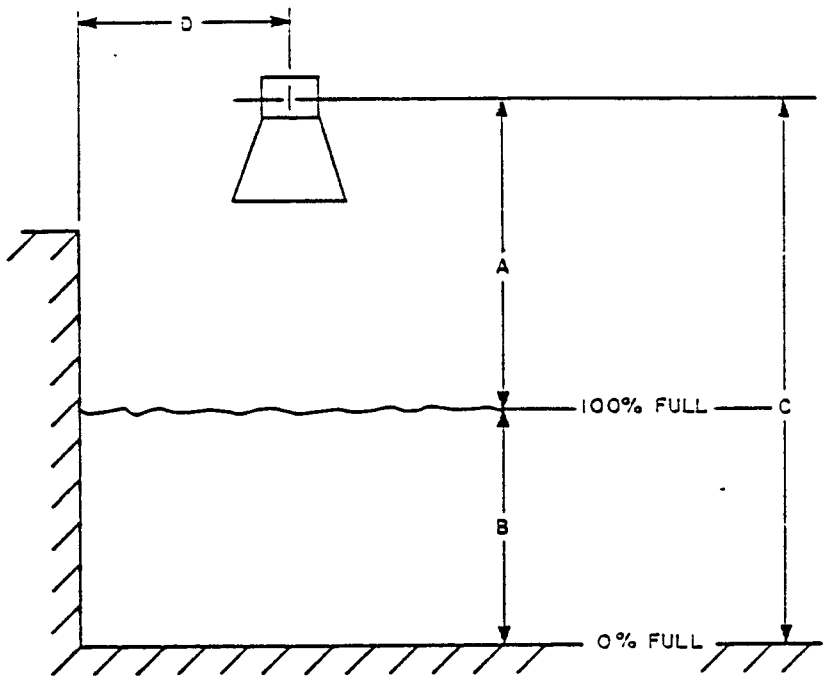

A = Distance from generator/receiver to 100% full level.

B = Measured range, distance from 0 to 100% full.

C = A & B.

D = Distance from tank wall.

Manufacturer's set limits on dimensions of "A", "C", "D" and the ratio of "A" to "C."

Figure 5.11. Installation dimensions.

2. Stilling well.

A stilling well is used with sonic/ultrasonic sensors to dampen out liquid level turbulence, reduce foam, increase signal strength (essentially producing a cylindrical-shaped sensor), eliminate noise from scray echos or to lessen condensate problems. When used, the stilling well should be cut from a single length of PVC pipe 15-20cm (6-8 in.) in diameter. The bottom end should be cut at a 45° angle.

Drill air relief holes near the top where the sensor is attached.

Keeping the stilling well clean is a must; accumulated solids can cause echos that the transmitter will read as liquid level. Therefore, provide for either manual or automatic washdown of the well interior wall.

3. Transmitter.

The transmitter location depends on the intended method of calibration. The transmitter may be remotely located as much as 200m (700 ft) away provided that:

a. The sensor is equipped with a calibration bar, or

b. The tank can be isolated from feed and exit streams and the level manually raised (or lowered), or

c. The liquid level in the tank can be manually observed at the transmitter location by an independent method.

F. Designer Checklist

Ask the following questions when reviewing or designing a sonic ultrasonic level meter application. All answers should be "yes."

1. Is temperature compensation provided? If not, is the degraded accuracy acceptable?

2. Is condensation unlikely to occur on the sender/receiver? If it is likely, then is an air purge and/or heater provided?

3. Can a stilling well be avoided?

4. Can the sensor be mounted so that the full range of expected levels are within the manufacturer's specifications for minimum and maximum distances?

G. Maintenance and Calibration

	Task	Frequency
1.	Calibration.	Every two months.
2.	Check temperature compensation.	Every two months.
3.	Stilling well clearing.	Depends on process stream.

H. Deficiencies

The following problems have been reported for sonic and ultrasonic level meter installations.

1. Stilling well causes interfering echos from pipe joints or deposited solids or grease. Maintaining a clean stilling well is difficult.

2. Meter does not read on cold days because receiver is covered with ice.

6.0 PRESSURE MEASUREMENT

6.1 PRESSURE CELLS

A. Application

Pressure meters are applied to enclosed process lines such as compressed air distribution systems, pump discharges, and tanks. With the aid of isolation diaphragms, pressure transmitters can be successfully applied to any wastewater treatment process.

TABLE 6.1. PRESSURE MEASUREMENT APPLICATION GUIDELINE

Recommended	Recommended with Isolation Diaphragm
Air	Chlorine
Oxygen and ozone	Wastewater with solids
Digester gas	Sludge
Water	
Secondary effluent	

B. Principle of Operation

1. Mechanical pressure elements.

The three most common elements used to indicate pressure are: Bourdon tubes, bellows, and diaphragms. In each case process pressure causes the element to move in proportion to the pressure applied. This motion is amplified by a mechanical linkage connected to a pointer and dial or by electronics to a voltage or current signal. Schematic diagrams of each type are shown in Figure 6.1.

a. Bourdon tube.

A Bourdon tube is a curved tube sealed at the tip. As process pressure increases inside the tube, the tube will straighten causing the tip to deflect. The deflection is transferred to a dial indicator by mechanical linkage. Besides a C-shaped tube, Bourdon tubes are available in spiral, twisted, and helical forms, round, oval or rectangular in cross section.

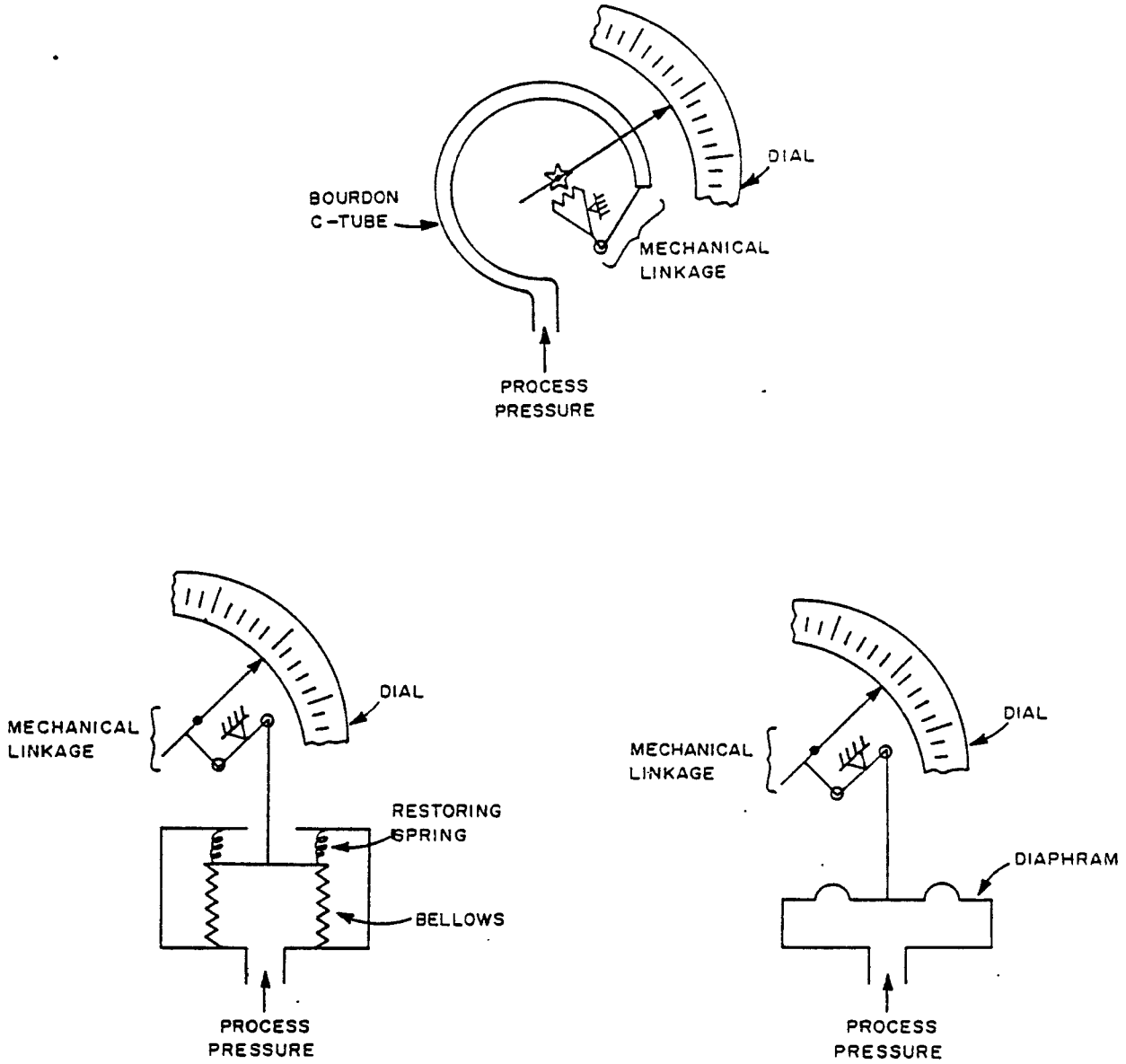

Figure 6.1. Mechanical pressure elements.

b. Bellows.

Bellows elements are deeply corrugated metal cylinders closed at one end. Process pressure applied to the bellows causes it to expand. Bellows expansion is transferred to a dial indicator by mechanical linkage. Bellows are also configured to contract on increasing pressure, in some cases restoring springs are added to increase operating range or to reduce element wear.

c. Diaphragms.

Diaphragms are metal disks, either flat or concentrically corrugated. Process pressure applied to one side causes the diaphragm to deflect outward. Diaphragm deflection is transferred to a dial indicator by mechanical linkage. Corrugated diaphragms are capable of greater deflection and are more linear than flat diaphragms.

2. Electro-mechanical elements.

Electric signals proportional to pressure are obtained by mechanically connecting an electrical component such as a capacitor, strain gauge, or inductor to a diaphragm. Deflection of the diaphragm will change the associated electrical property, e.g., distance between plates in a capacitor, piezoelectric response, and loop reluctance.

In some elements a restoring force is applied to the diaphragm to keep it undeflected. This eliminates nonlinearity due to diaphragm deflection. The restoring force is measured electrically and converted to pressure. These elements are called force-balance transducers.

3. Gauge, differential, and absolute pressures.

Gauge, differential, and absolute pressures may be measured by any pressure element depending on the reference pressure. Gauge pressure is measured using atmospheric pressure as reference. In this case, Bourdon tubes, bellows and diaphragms are constructed to have access to the atmosphere on the side opposite the process connection.

See Section 6.2 for information on differential pressure and absolute pressure elements.

4. Vacuum measurement.

Vacuum pressures for slight vacuums, to -90 kPa, can be measured with elements similar to those discussed above. At low vacuums these elements become inadequate because of gravitational interference in force measurement near zero atmosphere. Usually, low vacuums are measured indirectly from some other property of gas such as thermal conductivity, viscosity, or the behavior of gas during ionization or electrical discharge. Low vacuums are not monitored in wastewater treatment therefore, their measurement is not explained here.

C. Accuracy and Repeatability

Quartz Bourdon tubes can be accurate to ±0.01% of span, which is as accurate as a quality manometer. On-line pressure transmitters are accurate to better than ±0.5% of span. Pressure gauges are typically accurate to ±1 to 2% of span.

Typically, repeatability of measurement is about one-fifth of the stated accuracy.

D. Manufacturer's Options

1. Ranges - almost any range is available,

2. Materials (wetted):

   a. Brass,

   b. Bronze (or phosphor bronze),

   c. Beryllium copper,

   d. Stainless steel,

   e. Monel, and

   f. Hastelloy-C.

3. Transmitter output signals:

   a. 4-20 mAdc into 650 ohms,

   b. 10-50 madc into 250 ohms, and

   c. 1-5 VDC isolated.

4. Power:

   a. Two-wire transmitters are the most common configuration; they require external 12 Vdc or 24 Vdc power supplies, and

   b. Four-wire transmitters which require line power (115 VAC, 60 Hz).

5. Transmitter enclosure:

   a. NEMA 4, and

   b. Explosionproof.

6. Isolation diaphragms of the same wetted materials listed for the elements are available from some manufacturers. Diaphragm, transmitter, and connection line can be furnished as a complete assembly.

E. Installation

1. Install the transmitter in an environment that meets the specifications listed by the specific manufacturer. This is usually -20 to 65°C (0-150°F) and 0-95% relative humidity. Zero and span will shift with ambient temperature, so avoid temperature extremes or calibrate at conditions equal to the installed environment.

2. Install the transmitter as close as possible to the process measurement site. This will reduce response time which can be important in flow control or level control applications. The installation must allow good maintenance access. In some cases it will not be practicable to install the transmitter to meet both nearness and maintenance criteria. In these situations, control requirements must be given first priority.

3. Connect meter runs to liquid process lines horizontally. This will minimize the amount of solids and gas entering the connection. Entrapped gas will decrease response time and solids may plug the meter connection. Slope meter runs 8 cm per meter (1 in. per foot) of run so that gas bubbles bleed back into the process line.

4. Connect meter runs to gaseous process lines at the top of pipes or tanks to minimize the amount of solids and moisture entering the connection. Slope meter runs at least 8 cm per meter (1 in. per foot) of run so that condensation will drain into the process line. Any low spots in the meter run will require a condensate collection pot. Heat trace meter runs on condensable gases. Entrapped liquids may affect meter accuracy and may cause accelerated corrosion.

5. For applications where the measured liquid contains solids, flushing provisions or diaphragm isolation may be needed. Diaphragm connections to the process should be a minimum of 2.5 cm (1 in.) for sludge lines and 1.3 cm (0.5 in.) diameter for other wastewater lines.

6. Install an isolation valve at the process measurement connection on all meter runs. If this valve is not readily accessible for maintenance, install another isolation valve at the transmitter. See Section 6.2 for manifold requirements.

7. Materials recommended for harsh environments are:

   a. Chlorine - Hastelloy-C, and

   b. Digester gas - 316 stainless steel.

F. Designer Checklist

Ask the following questions when designing or reviewing pressure meter applications. All checklist answers should be "yes."

1. Is the meter situated for adequate response time and good maintenance access?

2. Are meter runs installed to keep out interfering substances?

3. Can the meter be calibrated in place?

4. Is the meter in a suitable environment?

G. Maintenance and Calibration

Task	Frequency
1. Calibration.	Every three to six months. Meters used in critical control applications may need more frequent calibration.

H. Deficiencies

The following problems are commonly reported for pressure transmitters:

1. Meter installed in an inaccessible location,

2. Meter runs incorrectly installed, and

3. Diaphragms or flushing not provided on sludge lines.

I. References

1. Gillum, Donald R. Industrial Pressure Measurement. ISA Publications, 1982.

2. Hewson, John E. Process Instrumentation Manifolds. ISA Publications, 1981.

3. Measurement & Control Pressure/Force Handbook and Buyers Guide, 1983. Measurements & Data Corporation, 1982.

6.2 DIFFERENTIAL PRESSURE

A. Application

Differential pressure transmitters, Δp cells, are used with primary elements to measure flows, gauge pressure, and liquid level. With the aid of isolation diaphragms or purge systems, Δp cells can be successfully applied to any wastewater treatment process.

TABLE 6.2. DIFFERENTIAL PRESSURE APPLICATION GUIDELINE

Recommended	Recommended with Isolation Diaphragm
Air	Chlorine
Oxygen and ozone	Wastewater with solids
Digester gas	Sludge
Water	
Secondary effluent	

B. Principle of Operation

1. Mechanical pressure elements.

The three most common elements used to indicate pressure are: Bourdon tubes, bellows, and diaphragms. In each case, the element moves in proportion to differential pressure. This motion is amplified by mechanical linkage to a pointer and dial. Schematic diagrams of each type are shown in Figure 6.2.

a. Bourdon tube

A Bourdon tube is a curved tube sealed at the tip. As process pressure increases inside the tube, the tube straightens, causing the tip to deflect. The deflection is indicated on a dial by mechanical linkage. Besides a C-shaped tube, Bourdon tubes are available in spiral, twisted, and helical forms, round, oval, or rectangular in cross section.

b. Bellows.

Bellows elements are deeply corrugated metal cylinders closed at one end. Process pressure applied to the high side of the bellows causes it to expand. Bellows expansion is converted to pointer and dial indication. Bellows are also configured to contract on increasing pressure. In some cases restoring springs are added to increase operating range or reduce element wear.

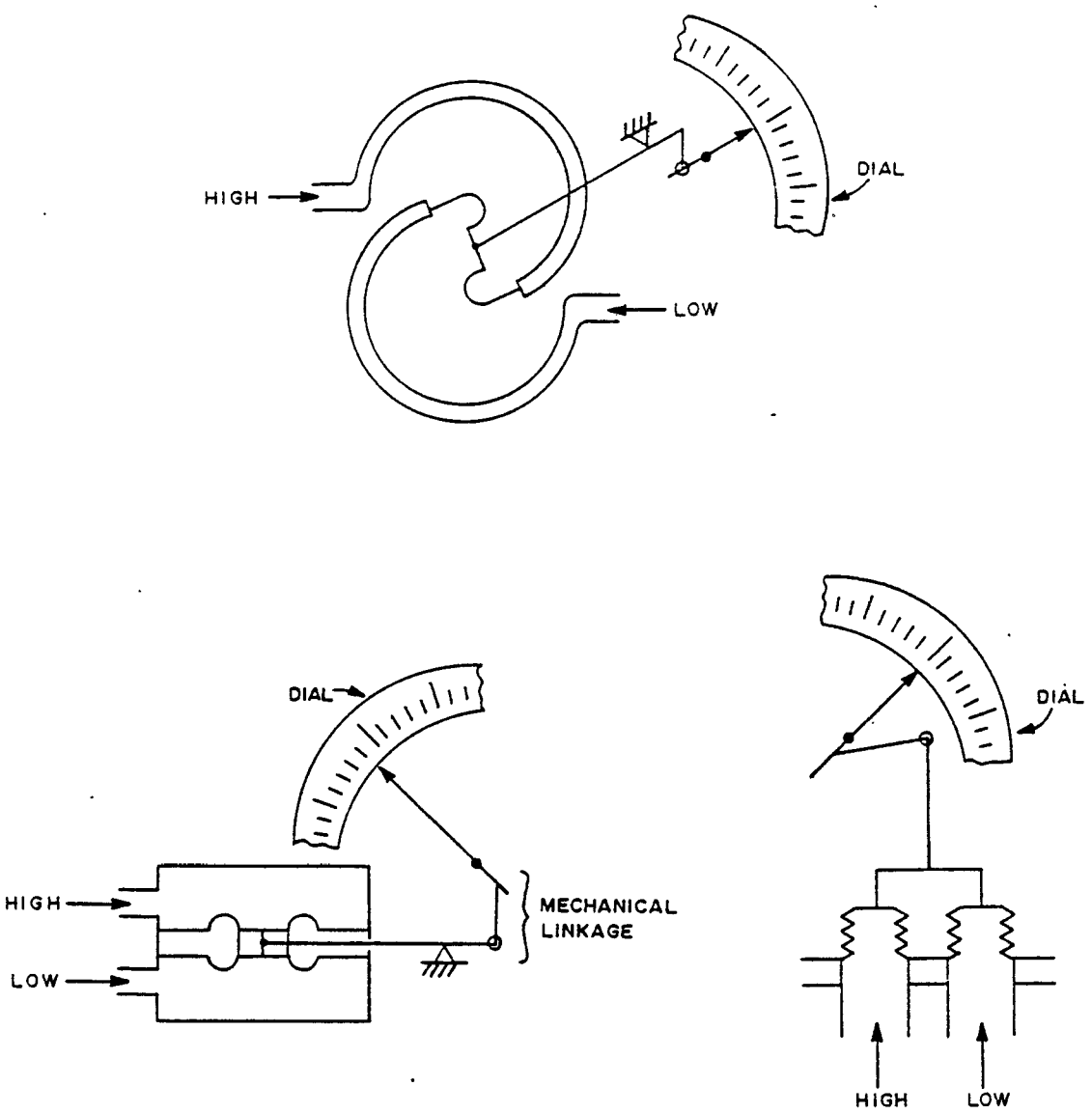

Figure 6.2. Mechanical differential pressure elements.

c. Diaphragms

Diaphragms are metal discs, either flat or concentrically corrugated. High and low process pressures are applied to opposite sides of the diaphragm. This causes the diaphragm to deflect. A mechanical linkage connects the diaphragm to a pointer for dial indication. Corrugated diaphragms allow larger deflection and better linearity than flat diaphragms.

2. Electro-mechanical elements.

Electric signals proportional to differential pressure are obtained by mechanically connecting an electrical component such as a capacitor, strain gauge, or inductor to a diaphragm. Deflection of the diaphragm will change the associated electrical property, e.g., distance between plates in a capacitor, piezoelectric response, and loop reluctance.

In some elements a restoring force is applied to the diaphragm to keep it undeflected. This eliminates nonlinearity due to diaphragm deflection. The restoring force is measured electrically and converted to differential pressure. These elements are called force-balance transducers.

3. Absolute pressure elements.

Absolute pressure elements are differential pressure elements with the low pressure side evacuated to -101.3 kPa and sealed from atmosphere.

C. Accuracy and Repeatability

Quartz Bourdon tubes have reported accuracies of ±0.01% of span, which is equal to the accuracy of a good quality manometer. On-line differential pressure transmitter accuracy is equal to or better than ±0.5% of span. Differential pressure gauges typically have accuracies of 0.5% to 2% of span.

Repeatability of measurement for differential pressure gauges and transmitters is commonly about one-fifth of the rated accuracy.

D. Manufacturer's Options

1. Ranges - almost any range is available,

2. Materials (wetted):

a. Brass,

b. Bronze (or phosphor bronze),

c. Beryllium copper,

d. Stainless steel,

e. Monel, and

f. Hastelloy-C.

3. Transmitter output signals:

   a. 4-20 mAdc into 650 ohms,

   b. 10-50 maCC into 250 ohms, and

   c. 1-5 VDC isolated.

4. Power:

   a. Two-wire transmitters are the most common; they require a separated 12 Vdc or 24 Vdc power supply, and

   b. Four-wire transmitters which require line power (115 VAC, 60 Hz).

5. Transmitter enclosure:

   a. NEMA 4,

   b. Explosionproof, and

   c. Both available with insulated jackets or boxes.

6. Isolation diaphragms of the same wetted materials are available from some manufacturers. Diaphragms, transmitter, and connection line can be furnished as a complete assembly.

7. Square root extractor.

8. Scales:

   a. Linear, and

   b. Square root.

E. Installation

1. Install the transmitter in an environment recommended by the manufacturer. This is usually -20 to 65°C (0-150°F) and 0-95% relative humidity. Zero and span will shift with changes in temperature, so avoid temperature extremes.

2. Install the transmitter as close as possible to the process measurement site to reduce response time which can be important in flow control or level control applications. The installation must allow easy access for maintenance. In some cases it will not be practical to install the transmitter to meet both nearness and maintenance criteria. In these situations, control requirements must be given first priority.

3. For solids bearing liquid process lines connect meter runs horizontally, do not connect meter runs to the upper quadrant of the pipe. This will minimize the amount of solids and gas entering the connection. Entrapped gas will decrease response time, and solids may plug the meter connection. Slope meter runs 8 cm per meter (1 in. per foot) of run so that gas bubbles bleed back into the process line.

4. Connect meter runs to gaseous process lines at the top of pipes or tanks to minimize the amount of solids and moisture entering the connection. Slope meter runs at least 8 cm per meter (1 in. per foot) of run so that condensation will drain into the process line. Low spots in meter runs should be avoided. If they cannot, add drain pots to these low spots. Heat trace meter runs on condensable gases. Entrapped liquids will affect meter accuracy and may cause accelerated corrosion.

5. Special precautions must be taken in steam applications to prevent overheating of the manifold and transmitter. Side mount pressure taps to allow steam into the tap while still allowing drainage of excess condensate back into the process pipe. A condensate pot should be installed on each meter lead. To avoid overheating, blowdown valves should not be incorporated in the manifold.

   In steam applications, a water seal is required between the condensate pot and the manifold. This prevents steam from reaching the manifold and transmitter and prevents uncontrolled buildup of condensate in the meter leads. The condensate pots must be identical in size, the same height above the transmitter, and self-draining to the process pipe.

6. For applications involving solids bearing liquids, flushing provisions or diaphragm isolation may be needed. Diaphragm connections to the process should be a minimum of 2.5 cm (1 in.) for sludge lines.

7. Install an isolation valve on all meter runs at the process measurement site (pressure tap), and except for very short tap lines, at the transmitter.

8. Materials recommended for harsh environments are:

   a. Chlorine - Hastelloy, and

   b. Digester gas - 316 stainless steel.

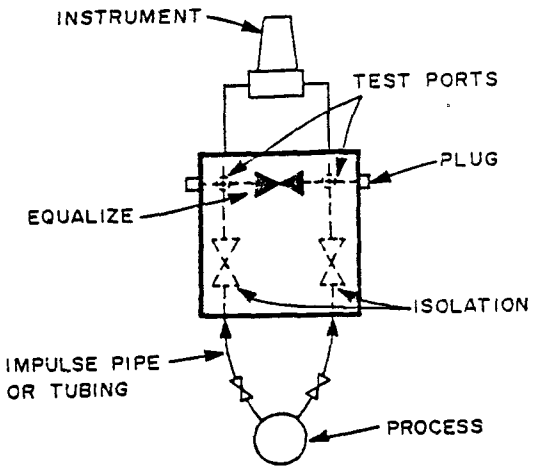

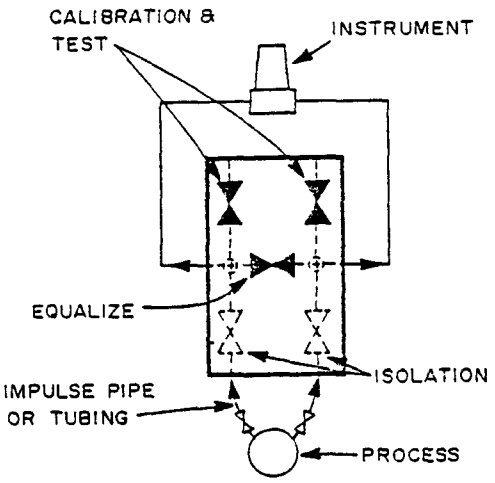

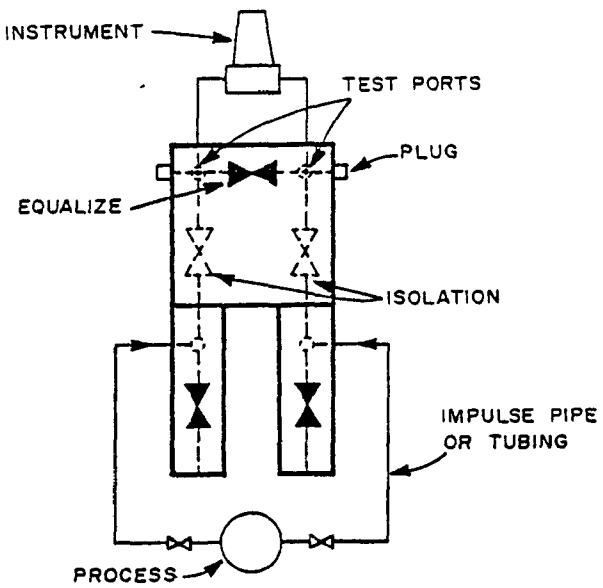

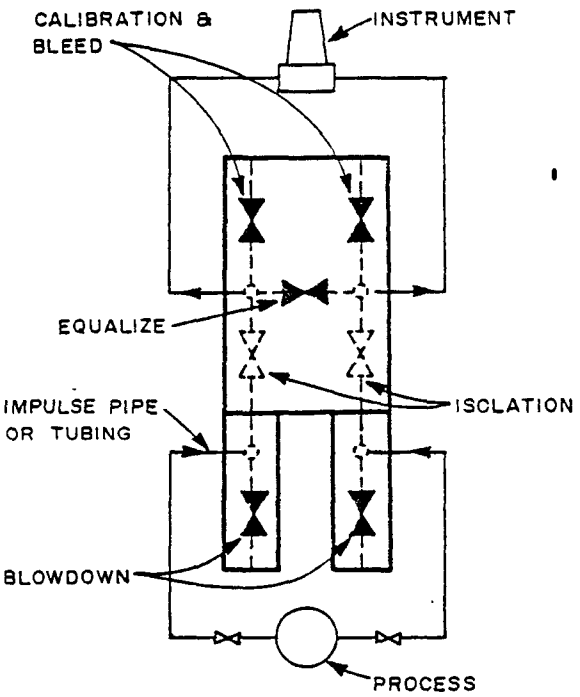

Figure 6.3. Manifolds.

9. Differential pressure transmitters are usually installed with valves that enhance some combination of instrument calibration, blowdown of accumulated material in the meter piping, and isolation of the transmitter. An economic way to provide the desired functions is to use factory-made valve manifolds. Some common manifolds are shown in Figure 6.3. Available manifold options are:

   a. Number and configuration of valves:

      1) 3-valve: isolation and equalization,

      2) 5-valve: isolation, equalization, and calibration,

      3) 5-valve: isolation, equalization, and blowdown, and

      4) 7-valve: isolation, equalization, calibration. and blowdown.

   b. Process connections:

      1) Pipe: 1/2" NPT female and 3/8" NPT female, and

      2) Tube: 3/8" and 1/2".

   c. Transmitter connections:

      1) Pipe: 1/2" NPT female,

      2) Direct - flanged, and

      3) Tube: 3/8" and 1/2".

   d. Materials of construction:

      Same selection as for transmitter.

   e. Remote zeroing:

      1) Motor operated 3-valve manifold.

   Wastewater treatment applications typically use 3-valve manifolds which implies that a check of meter zero is sufficient and that a check of the span is not required at a frequent enough interval to justify the expense of a more complex manifold. Span calibration test frequencies of three to six months for most applications confirms this practice. Where Δp cells are part of a flow measurement system used as a standard, or for billing purposes, the frequency of calibration and testing may be much more often. In such cases it is recommended that 5-valve manifolds be installed to reduce calibration setup time.

10. A common use of Δp cells is with primary flow elements to measure pressure-drop for flow calculation.

    Special installation practices for flow applications are presented with the primary device, see orifice meters, venturi meters.

11. Another common usage of Δp cells is to measure liquid levels. Two general methods are used: hydrostatic head and bubbler (dip tube). Bubbler installations are more common in wastewater treatment processes; they are discussed in Section 5.1. Figure 6.4 shows typical hydrostatic level installations for an enclosed tank. The tank is covered, so the Δp cell must use the pressure of the vapor phase as a reference. The Δp cell is at the same level as the bottom pressure tap, and the connection to the top tap is vapor filled or "dry." Thus, the difference in pressure is proportional to liquid level. If the tank was open, a plumbing connection to the reference side of the Δp cell would not be necessary. The Δp cell would just need to be at the same ambient pressure, i.e., in the same room with the tank or both the Δp cell and the tank outdoors.

    A "wet leg" configuration for level measurement is shown in Figure 6.5. The reference side of the Δp cell is filled with a liquid. It does not have to be the same as the tank liquid. If the liquid is not the same, the difference in specific gravity of the two liquids must be used to correct the meter calibration. The liquid in the wet leg prevents unwanted accumulation of condensate at the reference side. In this configuration the reference (wet leg) is connected to the low-pressure side of the Δp cell, just as in a dry leg setup. As shown, the meter would read -100% at '0' liquid level and '0'% at 100% liquid level. This is corrected during calibration by supressing zero to provide a correct tank level indication.

F. Designer Checklist

Ask the following questions when designing or reviewing differential pressure meter applications. All checklist answers should be "yes."

1. Is the meter situated for adequate response time and good maintenance access?

2. Are meter runs installed to keep out interfering substances?

3. Can the meter be calibrated in place?

4. Is the meter in a suitable environment?

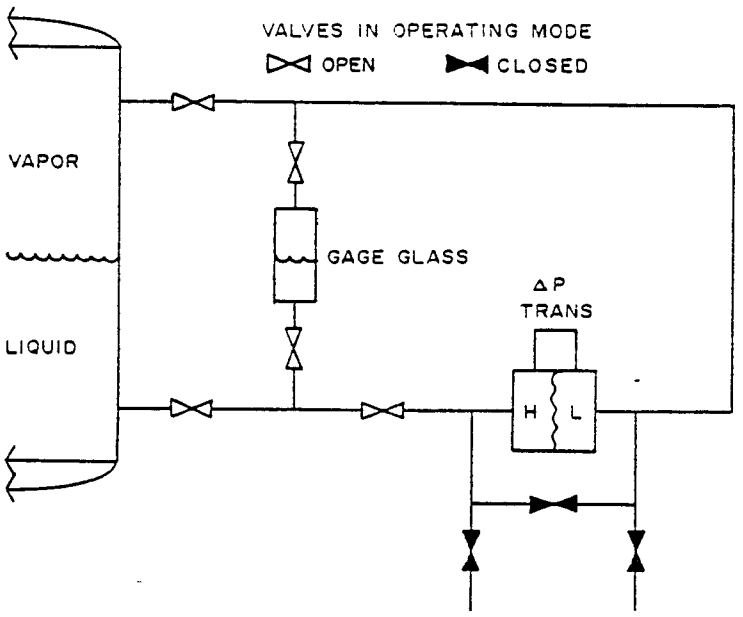

Figure 6.4. Dry leg.

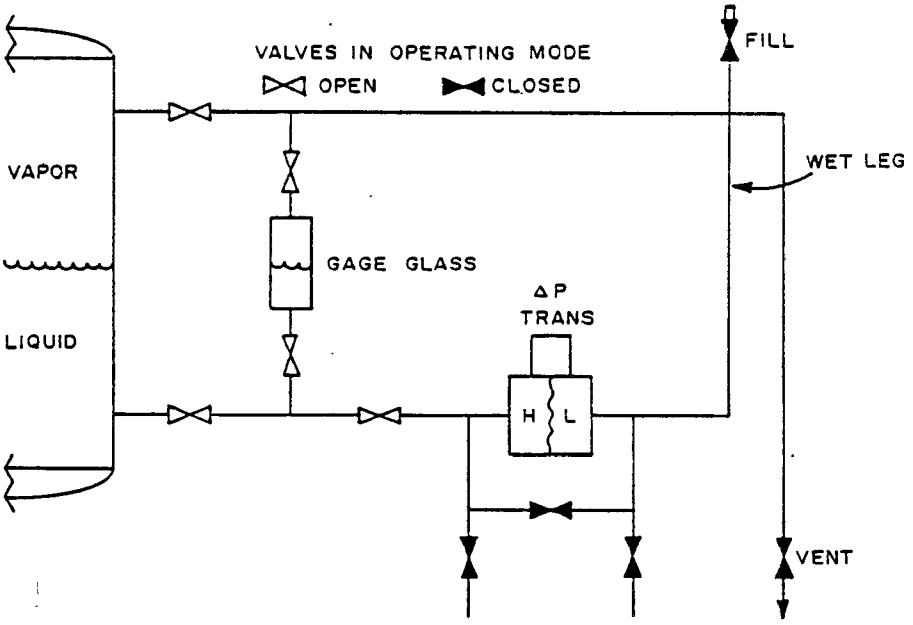

Figure 6.5. Wet leg.

G. Maintenance and Calibration

Task	Frequency
1. Calibration.	Every three to six months. Meters used in critical control applications may need more frequent calibration.

H. Deficiencies

The following problems are commonly reported for pressure transmitters:

1. Meter installed in an inaccessible location,

2. Meter runs incorrectly installed, and

3. Diaphragms or flushing not provided on sludge lines.

I. References

1. Hewson, John E. Process Instrumentation Manifolds. ISA Publications, 1981.

2. Manual on Installation of Refinery Instruments and Control Systems, Part I - Process Instrumentation and Control, Section 1 - Flow, and Section 2 - Level. American Petroleum Institute, 1974.

3. Measurement & Control Pressure/Force Handbook and Buyers Guide, 1983. Measurements & Data Corporation, 1982.

7.0 PERFORMANCE TESTING

7.1 FLOW

A. General

Perform quality assurance testing to satisfy stipulated acceptance requirements and to provide a calibration reference point for a particular flow meter. Perform quality control monitoring as an on-going practice to maintain a continuous indication of meter reliability.

1. Even if a flow meter is factory calibrated prior to delivery, perform an in-place calibration when the meter is first installed to satisfy the stipulated acceptance requirements and to establish a calibration reference to use for quality control monitoring and periodic maintenance calibration. Two types of calibration procedures are presented:

   a. Hydraulic calibration.

   b. Non-hydraulic calibration.

2. Prior to calibration, be sure that the flow meter is properly installed and that it is given a preliminary checkout according to the manufacturer's instructions.

B. Non-Hydraulic Calibration

1. During the process design phase, layout equipment and piping to allow in-place hydraulic calibration and acceptance testing for all flow meter installations. In certain situations this may not be feasible, and calibration testing may be performed using "simulator-type" calibration equipment offered as an option by many meter/transmitter manufacturers.

2. Use the simulator method of calibration only when complete hydraulic testing cannot be performed and when there is no uncertainty about the proper operation and performance of the primary metering device. Obtain agreement from all parties involved as to the validity of this type of testing before acceptance.

3. With simulator-type calibration, the flow signal produced by the primary metering element, is simulated and input to the converter/transmitter to set the zero and span.

C. Hydraulic Calibration

1. Zero the meter and correct any offset according to manufacturer's calibration instructions.

2. Set up a flowrate through the meter that is within the anticipated working range (design range) of flows. Allow enough time for flow to become steady, then measure the reference or "true" flowrate (Q_R) using one of the methods in Part C of this section. During the time Q_R is being measured, measure the indicated flow rate through the meter. Use this flowrate (Q) to calculate the percentage of error utilizing the following equation:

$$\%Error = (Q - Q_R)/Q_R \times 100$$

3. Utilize the above procedure for a minimum of three flowrates, low, medium and high, within the design range of the meter. Next, plot the calculated percentage error against the reference flowrate, Q_R (additional test runs are recommended to ascertain the repeatability of the meter). Between each test run, perform a zero check to determine any short term drift.

4. Also, calculate and plot the percentage error in measuring Q_R vs. Q_R on the same plot. These values will depend upon which reference method in Part D is used and may be referenced elsewhere (2 - 9).

5. Next, draw a curve between the points of each of the percentage error groups (Q and Q_R). If the percentage difference between the curve for Q and Q_R is greater than the accuracy stipulated for that type of meter (as noted in previous sections of the handbook or alternative specifications), the performance of the meter may be unsatisfactory and the following options should be considered:

   a. If the plot shows a constant percentage error for Q, a span adjustment at the meter transmitter is required following the manufacturer's instructions. Repeat the testing to verify correct span.

b. If meter performance cannot be adjusted to meet purchaser's specifications, repair or reject under acceptance stipulations.

c. If meter data differences can be ascribed to non-ideal installation conditions (e.g., inadequate approach piping for mag meters) and the data is otherwise repeatable, the results of the calibration tests can be used to develop a new, in-place reference for the meter.

6. Regard the proceding error comparison method described above as a suggested procedure only. Other comparison procedures agreed to by the involved parties may be used to carry out initial calibration and acceptance testing. The main consideration for any comparison scheme, however, is to use the reliability (percentage error) of the reference measurement to determine the accuracy of the tested meter.

D. Flow Measurement Methods for Hydraulic Calibrations

1. The following general methods for measuring reference flow (Q_R) used in determining the measurement accuracy of hydraulically tested flow meters are briefly described:

a. Volumetric.

b. Comparison with a reference flow meter.

c. Dilution.

d. Salt velocity.

e. Velocity area.

These methods vary in difficulty and in accuracy. The method selected will be determined by the type of meter being calibrated, the type of liquid being measured, and the resources available to conduct the test.

2. Volumetric calibration.

The feasibility of the volumetric calibration (drawdown) method depends primarily on the availability of suitable tank space and connecting conduits. Important considerations for this method are:

a. Conduct the test using the process liquid to be measured under normal flow meter operation.

b. This method is very suitable for measuring wastewater sludges.

c. The potential accuracy of this method is high.

d. The tank should be regularly shaped so its volume can be calculated within acceptable limits of accuracy.

e. The tank volume should be large enough to provide a test run long enough to make start and finish timing errors, negligible.

f. The change in liquid level in the tank should be enough so that starting and finishing depths can be measured without introducing significant error.

g. The flow rate should remain relatively constant during the test run.

Estimating the percentage error for this testing method should include an estimate of errors introduced due to physical mesurements of tank volume, depth change, and the elapsed time of the test.

3. Comparison with a reference meter (transfer meter).

a. A reference meter so described is a flow-measuring device whose performance characteristics can be referenced to published standards or to recommended practices acceptable to involved parties. Examples include:

1) Standard venturi tubes and venturi nozzles (2,3,4).

2) Orifice plates (2,3).

3) Parshall flumes (4,5).

4) Thin plate weirs (5).

b. Important considerations regarding this method include:

1) The flow meter(s) used as reference devices must meet all requirements of accepted standard practices in fabrication installation and use. In most wastewater treatment plant applications, conformance to these requirements, especially for installation and use, is difficult.

2) Use of differential pressure type flow meters requires pressure differential measurement with a U-tube mercury manometer.

3) When standard weir or flume methods are used, a point gauge must be used for head measurement.

4. Dilution method.

a. With the dilution method the flow rate is deduced from the dilution of measurable properties of tracer chemicals added to the flow (turbulent) in known amounts. The tracer can be injected either in a constant rate or in a one-shot slug. The constant-rate method is more suitable in wastewater treatment plant applications. Consult reference 7 for greater detail of this method.

b. In the constant-rate injection method, a tracer solution of accurately known concentration is injected upstream at a constant, accurately measurable, rate. At a downstream distance sufficient to achieve complete mixing and a steady-
state tracer concentration, the flow is sampled. The tracer concentration is determined and used to calculate the flow rate (6).

c. Important considerations regarding this method include:

1) The tracer property measured must be conservative. Rhodamine WT has been used successfully in raw sewage, however, its behavior in sludges is not known.

2) Accurate measurement must be made of the rate at which the tracer is added, and the initial and final concentrations of the tracer.

3) A high sensitivity spectrophotometer is required for this method.

5. Salt-velocity method.

a. In the salt-velocity method, brine is injected suddenly at an upstream station in such a way that it rapidly becomes distributed across the pipe section. The time of passage of the salt pulse between two downstream stations is measured by conductivity-sensitive electrodes. The flowrate may then be determined if the volume of the conduit between the electrodes is accurately known. Consult References 3 and 8 for details.

b. Important considerations regarding this method include:

1) The best attainable accuracy for this method is 1%.

2) The process liquid being measured must have a significantly smaller conductivity than the brine solution.

3) The method is not satisfactory for use with raw sewage or sewage sludges because of conductivity fluctuations; however, it is suitable for treated effluent.

6. Velocity-area method.

a. This method is applied to a flow cross-section by measuring a number of velocities over the section, each representative of the average velocity within an incremental area, and then summing the resulting velocity-area products. This method can be applied to both open and closed conduit flows; but it is more conveniently employed in accessible open channels. Consult Reference 9 for further information.

b. Important aspects of this method include:

1) The individual velocity components can be measured by point velocity measuring instruments, e.g., current meters, pitot tubes, or by acoustic velocity meters that measure an average velocity component along a line path.

2) The point velocity meters are intrusive and may not work well with raw sewage and sewage sludges.

3) The velocity sampling requirements are lengthy and this method is suitable only where long periods of steady flow are available.

E. Performance Monitoring

1. In addition to carrying out acceptance and calibration testing, conduct performance monitoring on an on-going basis for those flow meters which provide a flow rate value important to plant operation (this would include almost every flow meter in a wastewater treatment facility). Performance monitoring can provide plant personnel with a quick indication of meter performance by using a secondary instrument which measures the flow to an intermediate accuracy of 5 to 10% of the actual flow. Types of measurements which can be used for flow meter performance monitoring include:

a. Measuring pressure difference.

b. Manufacturer-prepared rating curves and tables.

2. Measuring pressure difference.

a. Measuring of a pressure difference at a location where the flow rate has a unique and repeatable relationship to the primary flow meter provides a common and adequate means for monitoring meter performance. The pressure difference may be measured around any pressure differential-causing hydraulic element, with 90° pipe elbows being most commonly used.

b. This type of monitoring should be available prior to acceptance and calibration testing of the primary flow meter, so that a relationship between the pressure monitor and the flow rate indicated by the meter can be established from the testing results.

c. Consider the following for the use, placement, and operation of pressure taps to monitor pressure difference.

   1) Mount the taps so they are flush with the pipe inner surface and free of burrs.

   2) Hole diameter is not extremely critical; diameters from 1/64 inch (0.5 cm) to 3/8 inch (1.0 cm) for small to large pipes are usually adequate.

   3) Install the taps along the axial center of pipe elbows. For other locations, install them both up- and downstream of the device producing the pressure difference.

   4) Multiple taps with piezometric rings are not recommended for use with typical wastewater treatment process streams; use single taps, placed upstream and downstream.

   5) Locate single taps in horizontal or near-horizontal process lines in a horizontal diametric plane to minimize gas and/or solids entry into the measurement lines.

d. Consider the following aspects of the differential pressure sensing device and connecting manometer tubing when setting up the monitoring system:

   1) When U-tube manometers are used the medium selected should be appropriate for the magnitude of the pressure difference expected, e.g., water-air for small differentials and water-mercury for large differentials so that a minimum deflection of 3 inches should be maintained.

2) When commerical differential pressure cells are used, they should be frequently calibrated to a liquid column manometer.

3) Route manometer (tap line) connecting tubing from the tap location to the sensing device to avoid accumulation of gasses and/or solids, e.g., sloping horizontal lines, bleed valves at high points, etc.

4) The connecting tubing should be corrosion-resistant with a nominal diameter of 3/8 inches. Provide it with valving to facilitate periodic flushing.

3. Manufacturer prepared rating curves and tables.

Approximate flow measurements suitable for performance monitoring may also be obtained from manufacturer-prepared pump rating curves and flow vs. angle of opening data for butterfly valves. These measurements would be subject to inaccuracies caused by installation and/or operational factors but none the less provide an easy means of ascertaining gross meter inaccuracies.

F. References

1. National Bureau of Standards. Recommended Practice For The Use Of Electromagnetic Flow Meters In Wastewater Treatment Plants. EPA, Municipal Environmental Research Laboratory, Cincinnati, Ohio, August, 1980.

2. International Standards Organization. Measurement of Fluid Flow by Means of Orifice Plates, Nozzles and Venturi Tubes Inserted in Circular Cross-Section Conduits Running Full. ISO/DIS 5167, draft revision of R781, 1976.

3. American Society for Testing and Materials. Standard Methods of Flow Measurement of Water by the Venturi Meter Tube. ASTM D2458-69.

4. American Society for Testing and Materials. Standard Method for Open Channel Flow Measurement of Industrial Water and Industrial Wastewater by the Parshall Flume. ASTM D1941-67.

5. British Standards Institution. Methods of Measurement of Liquid Flow in Open Channels. Standard No. 2680-4A, Part 4A, 1965.

6. International Standards Organization. Measurement of Water Flow in Closed Conduits--Tracer Methods, Part I: General. ISO No. 2975/1, 1974.

7. International Standards Organization. Part II: Constant Rate Injection Method Using Non-radioactive Tracers. ISO No. 2975/2, 1974.

8. Hydraulic Institute. Standards for Centrifugal, Rotary and Reciprocating Pumps. 12th edition.

9. International Standards Organization. Liquid Flow Measurement in Open Channels -- Velocity Area Methods. ISO 748, 1976.

8.0 PUMP CONTROL METHODS

8.1 VARIABLE FLOW SERVICE

A. Introduction

This section explains some ways pumps are used to control wastewater treatment flows. Where pertinent to control, principles of pump operation are included. Subjects such as sizing, mechanical details, and manufacturer's options are not included in this discussion. For further information on these subjects, see the references listed at the end of the section.

Three classes of pumps are presented here: metering, positive displacement, and centrifugal. Although metering pumps use the positive displacement principles, they are considered separately because they form a major subgroup of positive displacement pumps.

B. Metering Pumps

1. Applications

In wastewater treatment plants, metering pumps are used to add polymer or other chemicals to clarifiers for aid in settling or for precipitation of pollutants, to add chemicals to boiler makeup water, to add chemicals for dewatering of sludges, to add acid or base for pH control, and in other similar ways.

In an open-loop control system, the pump is usually either adjusted manually to the desired rate of addition or paced to the main process flow. Manual adjustments are recommended only for processes that operate at a constant or nearly constant flow. When addition is paced to the process flow, the addition rate is calculated as follows:

$$Q_A = \frac{D \cdot Q}{P}$$

where:

D = dosage, mg/l
Q = main process flow, l/min
Q_A = chemical addition rate, l/min
P = density of chemical, g/l

For variable stroke pumps, the stroke length is:

$$L = \frac{D \cdot Q}{SAL}$$

where:

S = pump speed, strokes/min
A = piston area, cm^2
L = stroke length, cm

And for variable speed pumps, the speed is:

$$S = \frac{D \cdot Q}{LAP}$$

Typically, the flow signal and the pump control signal are both 4-20 ma, and the dosage is set at an electronic ratio station. If both speed and stroke are variable, the practice is to pace pump speed and manually adjust stroke to set the dosage, thus eliminating the ratio station. In open-loop applications, errors in stroke and speed accuracy are not compensated by controller action.

Accuracy of stroke adjustment is typically stated to be ±1% of full capacity, with linearity and repeatability also ±1%. In terms of absolute error, stroke adjustment at constant discharge pressure would perform as follows:

% Full Stroke	Stroke Absolute Error	Pump Speed Absolute Error
100%	±1%	0%
50%	±2%	±1%
25%	±4%	±1%
10%	±10%	±1%

Error is also introduced by a change in motor speed resulting from a change in load. Another ±1% absolute error is added to the stroke error for 50% stroke and less. During the life of a pump, error will increase due to wear on moving parts that allow hydraulic leaks and metered liquid leaks. Another source of error is entrainment or buildup of gas that causes some piston displacement to be negated by compressibility of the gas. Mass flow rates will be affected by changes in metered liquid density (e.g., due to temperature changes).

Closed-loop systems involve a process measurement downstream of the chemical addition point. A controller uses this measurement to vary the metering rate to match the process setpoint. Errors in speed or stroke adjustment are corrected by the controller. In closed-loop applications the process requirements for turndown of chemical addition can influence the choice of variable drive. Variable stroke pumps can turndown 100% to 0% of rated pump output, although stroke accuracy would normally limit turndown to 10:1.

Variable speed pumps on the other hand, are typically limited by the type of drive from 3:1 turndowns to about 10:1 turndowns. Examples of open-loop and closed-loop applications are shown in Figure 8.1.

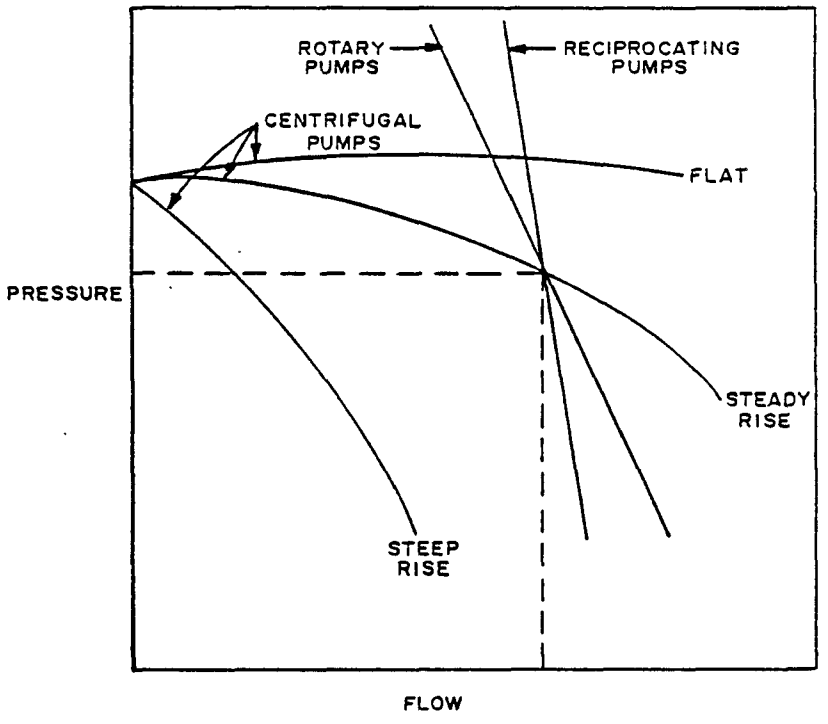

Figure 8.1. Typical centrifugal pump curves, at constant speed.

2. Principle of Operation

Metering pumps are positive displacement type pumps of either the reciprocating or rotary type. Reciprocating metering pumps have two general methods to vary pump output: variable speed or variable stroke. Stroke on a variable speed pump is adjusted by either varying the crank travel directly (amplitude modulation) or by varying the amount of fixed-crank travel transmitted to the piston.

Amplitude modulation can also be achieved by using a slider-crank in which the length of a pivot arm (or eccentric) is adjusted. Adjusting the pivot arm to zero length results in zero piston travel. Design of slider-crank mechanisms vary by manufacturer. (An example is shown in Figure 8.2.)

Another method to modulate amplitude is by the shift-ring drive in which the piston rotates in a ring that can be positioned.

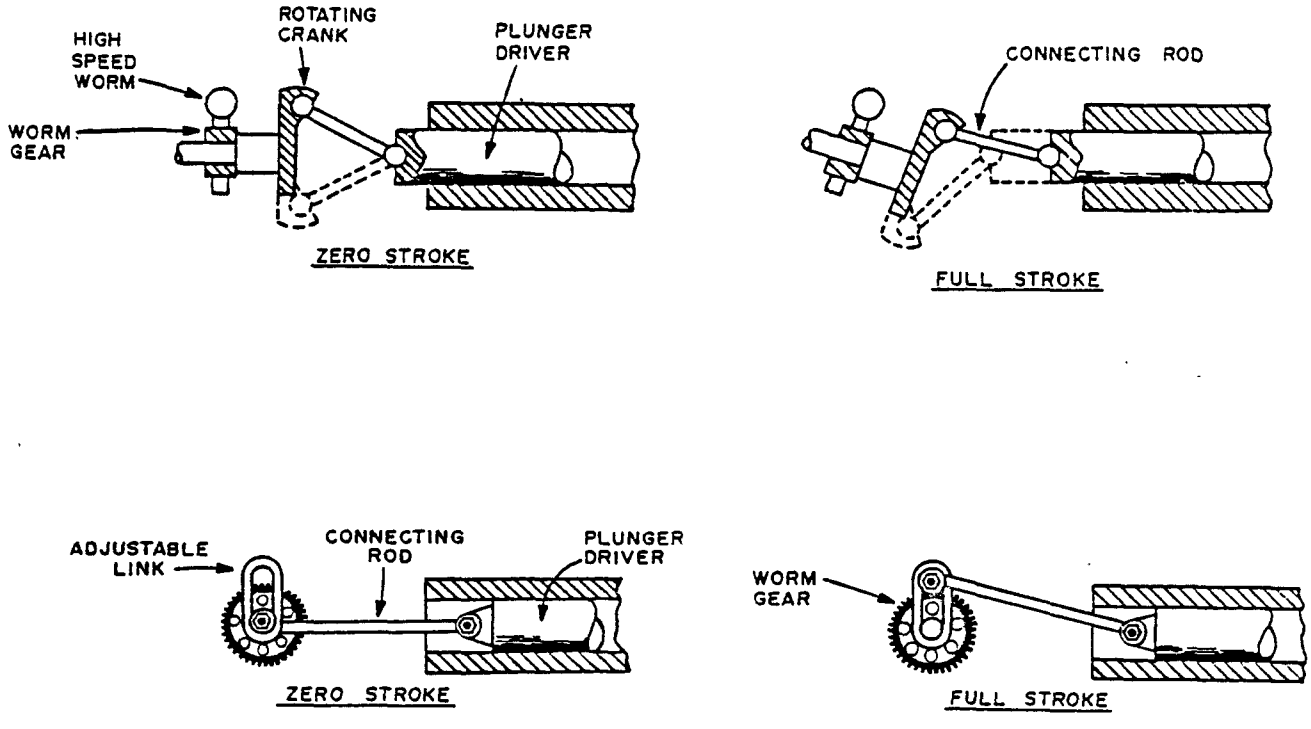

Figure 8.2. Slider-crank stroke adjustment.

Fixed-crank stroke adjustments use a lost-motion drive that limits the piston or diaphragm travel. Motion can be lost in the transfer from crank to piston as shown in Figure 8.3.

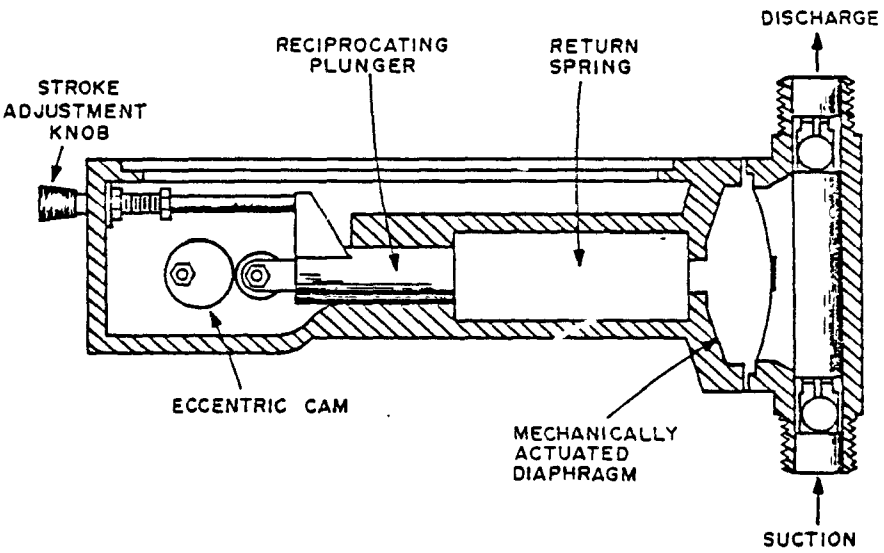

MECHANICAL LOST-MOTION DRIVE CHANGES THE DISCHARGE FLOWRATE BY VARYING THE PLUNGER RETURN POSITION. CRANK ECCENTRICITY REMAINS CONSTANT OVER THE ENTIRE FLOW RANGE.

Figure 8.3 Eccentric cam lost-motion stroke adjustment.

The piston reciprocates as it follows the eccentric cam until the piston is stopped by the stroke adjustment pin. Piston travel is resumed when the eccentric rotates enough to pass the position of the piston stop.

Another lost-motion drive is shown in Figure 8.3. Here motion is lost between the piston and the diaphragm by allowing some of the hydraulic fluid to escape to a reservoir.

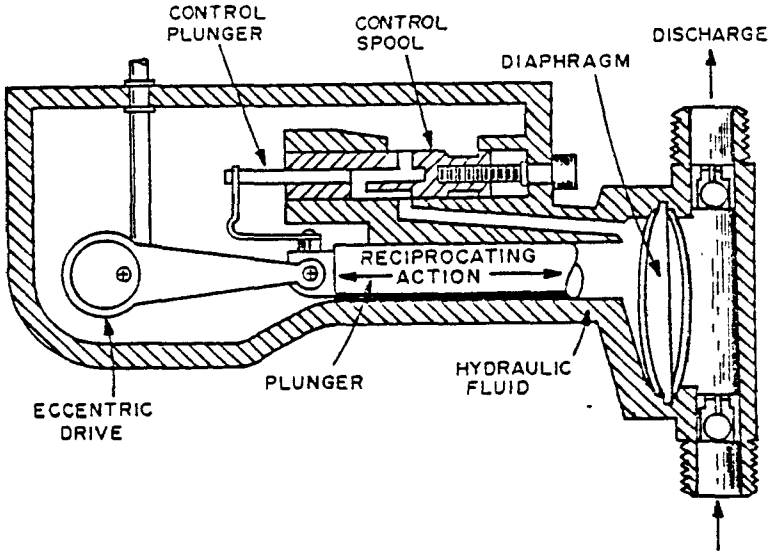

A PORTION OF HYDRAULIC FLUID IS PERMITTED TO ESCAPE THROUGH A BYPASS VALVE WITH EACH STROKE, THEREBY CHANGING THE EFFECTIVE STROKE-LENGTH OF THE PLUNGER. NOTE THE BALANCED-DIAPHRAGM LIQUID END ASSOCIATED WITH THIS DESIGN

Figure 8.4. Hydraulic lost-motion stroke adjustment.

Variable speed drives on a metering pump can be eddy-current, Silicon Controlled Rectifier (SCR), variable frequency, or belt drives using conical pulleys to vary the ratio of drive to pump speed. Variable speed drives are explained in Section 9.

Metering pumps can have just variable speed, just variable stroke, or both variable speed and stroke capabilities. The choice of variable drive depends on the pump's application.

Another method of metering uses a recycle valve to vary pump output. Variable rate pumps are more common because in automatic control situations they can eliminate the cost and maintenance of a control valve. The variable rate pumps also provide energy savings.

C. Positive Displacement Pumps

Positive displacement pumps (p.d. pumps) used in wastewater treatment are usually diaphragm, piston, or progressive cavity types. These pumps are used to pump liquids with high solids content such as thickened sludges.

Diaphragm and piston pump are large scale versions of the metering pumps discussed above. Variable speed and variable stroke control capabilities also apply here. Progressive cavity pumps do not have variable stroke capability; the rotor and stator are not adjustable.

Control methods for positive displacement pumps are either open-loop or closed-loop. A typical open-loop system is sludge withdrawal from a clarifier or thickener. Constant rate p.d. pumps are controlled by a frequency and duration of opertion basis (i.e., open-loop). Frequency and duration are adjusted to give a desired average flow rate as follows:

$$Q = f \times d \times S \times V$$

where:

Q = pumped flow, l/min
f = frequency, starts/min
d = duration of pumping, min/start
S = pump speed, strokes/min
V = stroke volume, l/stroke

Frequency needs to be often enough to scour sludge lines of sludge that may have settled out while the pump was off. Duration needs to be short enough to prevent short circuit or vortex formation through the sludge blanket. Frequency and duration should not be so often and short as to cause excessive wear and overheating on the motor starter and windings.

Alterations to this control strategy include:

- Set frequency in terms of volume of clarifier influent flow. This needs a clarifier influent flow meter.
- Stop pump based on duration or low-density cutoff, whichever occurs first. This needs a suspended solids analyzer.
- Start pump at high blanket level and stop at low blanket level. This requires two blanket level detectors.
- A combintion of any of the above options.

A variable rate pump can be operated with the same control method, but augmented to take advantage of variable speed properties. For example, pump rate may be regulated in closed-loop control to maintain measured suspended solids concentrations at a setpoint.

In some cases, the receiving process may be upset by large variations in flow. A variable rate pump can be set for steady, continuous operation that will maintain sludge withdrawal in the clarifier at the same time.

Variable rate pumps also have disadvantages, primarily in regard to settling of sludge in piping. This occurs at low liquid velocities, under 0.8 to 1 m/s (2.5 to 3 ft/s). Therefore, for variable rate pumps, the system piping needs to be designed to have this velocity at maximum turndown. The pipe size calculated to meet this criterion may be too small based on other system requirements, in which case variable rate pumps may be unsuitable.

Output of p.d. pumps can be modulated by using a recycle line and control valve. Throttling valves are not used because on the suction side they can cause cavitation problems and on the discharge side they can cause over pressurization. Protection from over pressurization is essential for p.d. pumps and is usually achieved by a pressure switch located on the discharge side to stop the pump motor.

D. Centrifugal Pumps

Centrifugal pumps are characterized by the output pressure (head) produced at various flow rates. Typical centrifugal pump curves are shown in Figure 8.4. Maximum head occurs either when the pump is deadheaded, or in the case of a drooping at a low flow. As the flow curve increase, the head falls off. Compared to positive displacement pumps, a centrifugal pump's capacity is very sensitive to changes in discharge pressure. Degree of sensitivity varies from flat response to steep response, with most pump designs falling in between with steady rise characteristics.

Size a centrifugal pump by matching the pump characteristics to the process. An example is shown in Figure 8.5. The pump will operate at the pressure and flow of the intersection with the system headloss curve. In the figure, system curve 1 represents maximum flow required by the process plus a safety factor; curve 2 represents a throttled state at minimum flow. A good matchup occurs when the pump efficiency is within the operating flow range, near the average flow. System curves or operating design data are calculated from fluid dynamic principles, while pump curves are available from manufacturer's literature.

However, just because a pump has a curve that meets the processes requirements at high efficiency, does not mean it is the best pump for the application. The designer must also consider average and maximum horsepower (brake-horsepower) requirements, net positive suction head, impeller design, number of stages, volute design, diffuser design, and mountings. These topics are beyond the scope of this section, but are presented in the referenced literature.

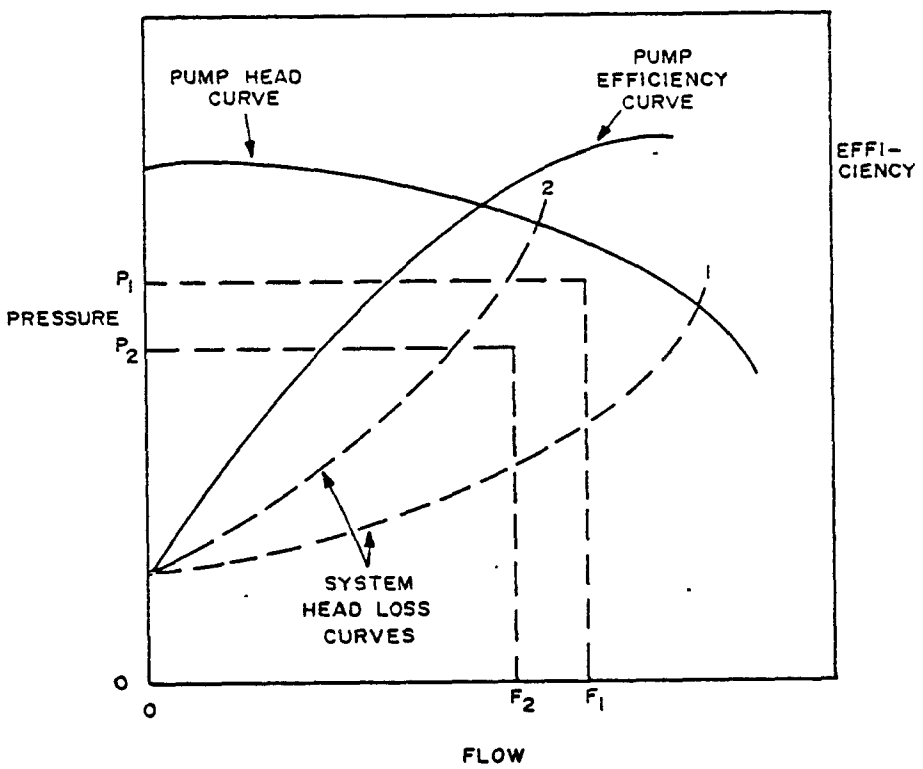

Figure 8.5. Sizing curves for centrifugal pumps.

The most common flow control method for centrifugal pumps is with a throttling valve. In design selection, a portion of the pump head at maximum flow is used for loss at the throttling valve. This portion may range from as low as 20% up to 33%. It is set by desired throttling valve gain characteristics, desired safety factors, and energy conservation.

For small process flows, the portion is often toward the higher percentage because energy conservation is not as important as gain and safety factors. The opposite is true for large process flows. Here, lower percentages are favored because of lower energy costs. Thus, pump sizing is strongly affected by the valve size. This is discussed in more detail in the section on control valves.

The output of a centrifugal pump is also controlled with a recycle valve. In this case, valve sizing and valve headloss do not affect pump sizing. To allow total recycle, all the pump head is lost or dissipated at the valve.

Pump output can also be changed by varying pump speed. A variable speed drive, such as variable frequency drive, eddy current, or SCR drive, is used to control pump speed. These and other variable speed drives are explained in the Section 3. These drives have less energy requirements than control valves. Due to inefficiencies of a drive, energy savings do not occur until average pump operation is under a certain percentage of pump speed. Several sources estimate this break-even point to be about 80-90% of full speed. A comparison of variable speed drives with throttling valves is shown in Figure 8.6.

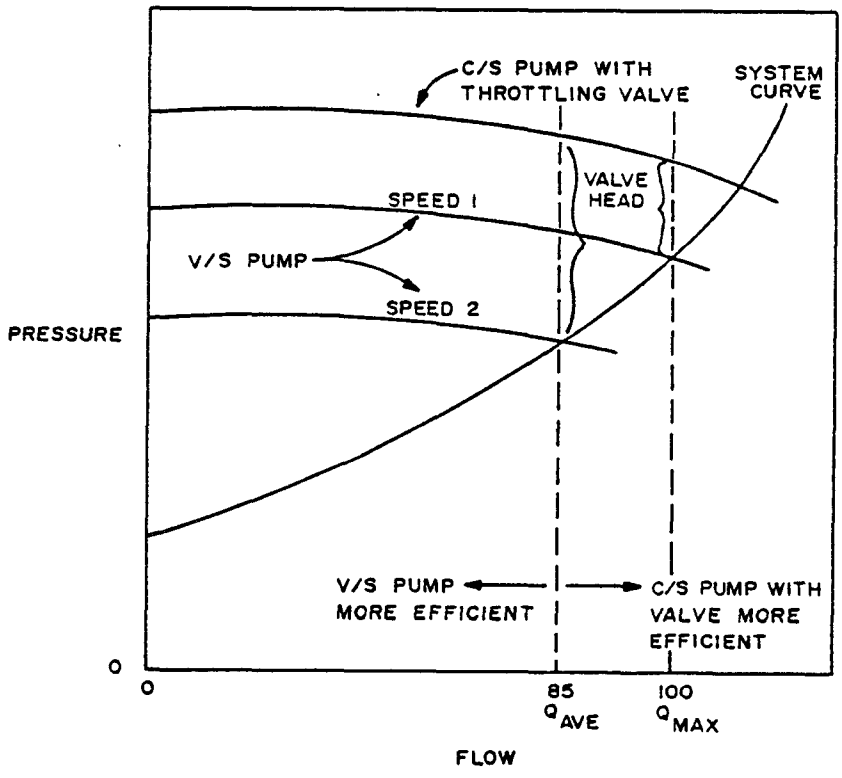

Figure 8.6. Variable speed versus throttling of centrifugal pumps.

These control methods also apply to multi-pump systems. In addition, starting and stopping pumps is a way to alter the output of a pump station. When more than one pump is in operation, station output can be calculated from the curves of the individual pumps. In general, pumps in parallel need similar curves and will have their capacities added together which produces a longer, flatter curve. Pumps in series will have their heads added together which results in a higher, steeper curve.

For example, consider a two pump system, with identical pumps in parallel. The pump station output is controlled by a throttling valve. A flow meter on the station discharge is used to shut off one of the pumps when flow falls below 80% of one pump's capacity and start a pump when flow rises above 100% of one pump's capacity. The system is shown on Figure 8.7. In this example, head losses at the throttling valve are a substantial portion of the pump curve. Could the use of variable speed pumps save energy somewhere below 100% of station output?

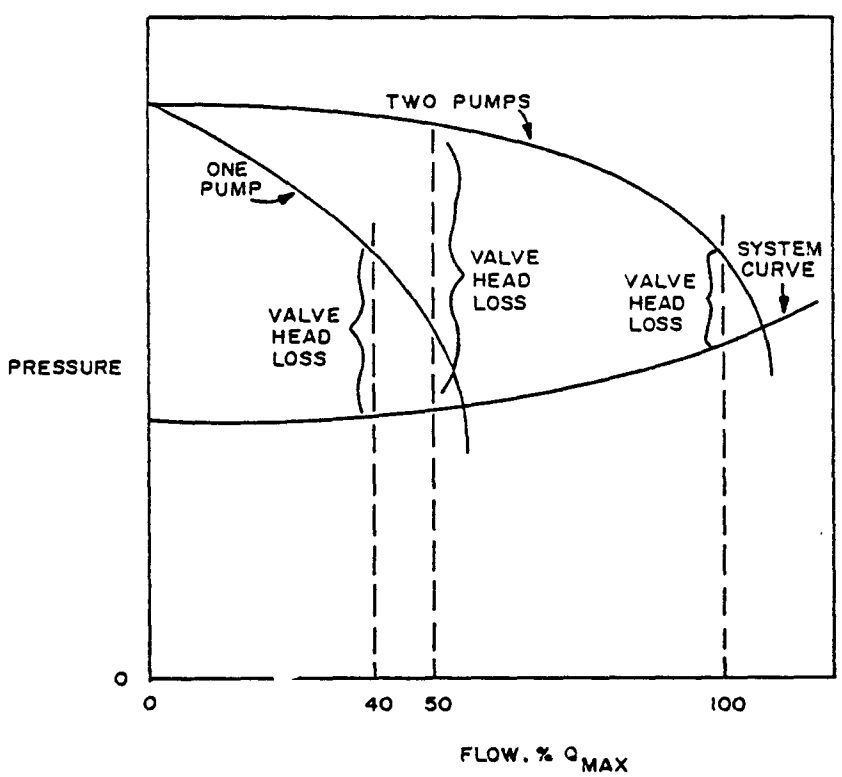

Figure 8.7. Two identical pumps in parallel with throttling valve.

Now look at the same pump curves where the pumps are variable speed. Assume that pump turndown is limited to 70% of maximum speed by the construction of the variable speed drive. Speed is related to pump performance approximately as follows:

$$\text{Flow capacity} = \frac{\text{Speed}}{\text{Max Speed}} \times \text{Maximum capacity}$$

$$\text{Head} = \frac{\text{Speed}}{\text{Max Speed}}^{2} \times \text{Head at maximum speed}$$

$$\text{Horsepower} = \frac{\text{Speed}}{\text{Max Speed}}^{3} \times \text{Horsepower at maximum speed}$$

Therefore, the turndown limit on capacity is from 100% to 70% of maximum capacity. This system is shown in Figure 8.8. Using just variable speed and start/stop control is not enough to provide a continuous range of control from one pump at minimum speed to two pumps at maximum speed. A control gap occurs from 50-70% of maximum station output. Either a recycle valve or throttling valve is needed to eliminate this gap. Energy savings should be expected if the average flow is less than about 80-90% of maximum.

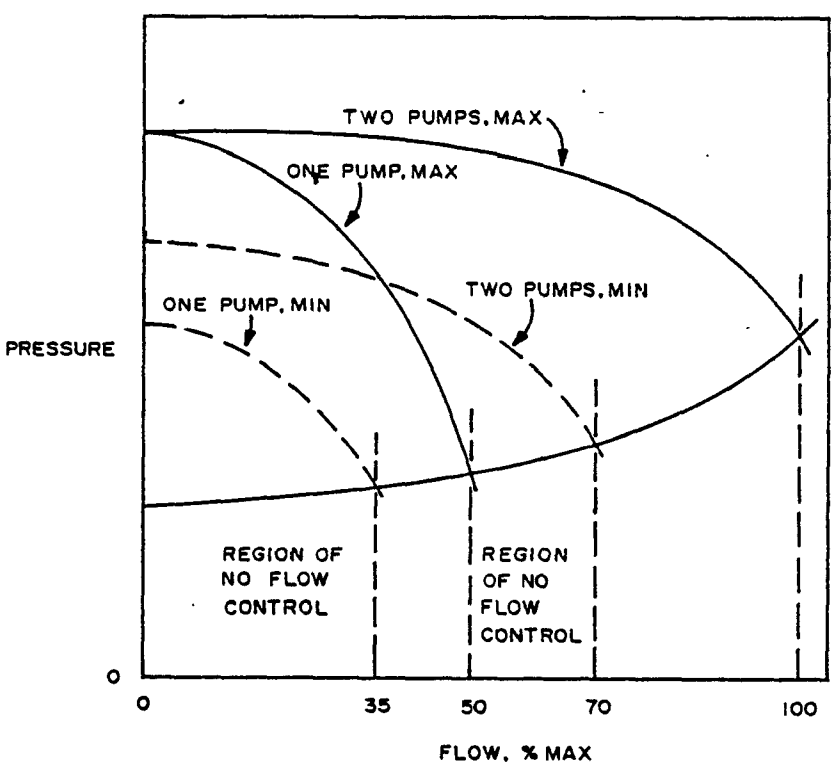

Figure 8.8. Two identical variable speed pumps in parallel.

When used for controlling wet well level in raw plant influent, centrifugal pumps are normally constant speed; started and stopped at selected level trip points. Usually tight level control is not needed, and flow is allowed to swing between wide limits. Once inside the plant, level control is often more stringent, and variable rate pump stations are more common.

E. References

1. Poynton, James, P. "Basics of Reciprocating Metering Pumps." Chemical Engineering, May 21, 1979, p. 156.

2. Bristol, John M. "Diaphragm Metering Pumps." Chemical Engineering, September 21, 1981, p. 124.

3. Coughlin, John L. "Control Valves and Pumps: Partners in Control." Instruments and Control Systems, January, 1983, p. 41.

4. Hilsdon, Charles W. "Using Pump Curves and Valving Techniques for Efficient Pumping." Research and Technology, March, 1982, p. 157.

5. "Energy Evaluation in Centrifugal Pump Selection." Plant Engineering, April 5, 1979, p. 71.

6. DeSantis, G. J. "How to Select a Centrifugal Pump." Chemical Engineering, November 22, 1976, p. 163.

7. Burris, Bruce E. "Energy Conservation for Existing Wastewater Treatment Plants." Journal WPCF, Volume 53, No. 5, May, 1981, p. 537.

8. Yedidiah, S. "Make Pumps with Drooping Curves Your Servants, Not Your Enemies." Power, March, 1982, p. 51.

9. Zell, Blair. "Pumps and Pumping Systems: Specifying to Save Energy." Specifying Engineer, October, 1981, p. 117.

9.0 VARIABLE SPEED DRIVE

9.1 MAGNETIC COUPLING

A. Application

Variable speed drives are used for pumping or other mechanical functions that cannot be properly accomplished with a reasonable number of constant speed units. Variable speed drives also offer increased flexibility in control.

A magnetic coupling variable speed drive system uses a standard constant speed induction motor to drive a coupling (clutch) that has an adjustable output speed. This drive offers good flexibility, with such options as braking, and accurate speed control by a feedback signal produced by a tachometer generator on the output shaft.

Characteristics of a magnetic coupling variable speed drive are:

1. Uses standard constant speed AC squirrel cage induction motor.

2. Generally for treatment plant applications a wide range of 10 - 750 KW (15 - 1,000 Hp) is available.

3. Minimum cost, simple variable speed drive.

4. Suitable for variable torque pumping or fan loads. Not suitable for conveyors and piston pumps that are subject to heavy vibrations.

5. Low efficiency at reduced speeds. At low speed a large amount of power is dissipated as heat in the magnetic coupling. This requires cooling the magnetic coupling by air or liquid.

   Don't use magnetic couplings at speeds below 75% of nominal speed for an extended time because of lowered efficiency.

6. Water cooling to improve heat dissipation is generally required above 300 KW (400 HP).

7. Magnetic coupling reliability is good, and minimal maintenance is normally required. It has brushes, but unlike dc motors and wound rotor motors, they are on the magnetic coupling and carry only small currents.

8. Potential problems exist in maintaining proper alignment between the motor, magnetic coupling, and pumps.

9. Additional floor space (for horizontal drives) or additional ceiling height (for vertical drives) is required, as compared to most other variable speed drives.

B. Principle of Operation

Magnetic coupling variable speed drives use a constant speed induction motor to drive a ferrous metal ring that rotates around a dc excited magnetic rotor connected to the load. DC current in the magnetic rotor is increased or decreased to vary the degree of coupling force generated. Output speed of the drive is a function of the strength of the rotor magnetic field and the load on the output shaft. Output speed is automatically controlled by a speed controller that compares the output speed signal from the speed transmitter to a setpoint and adjusts the amount of dc current to the magnetic rotor to maintain the desired speed. See Figure 9.1.

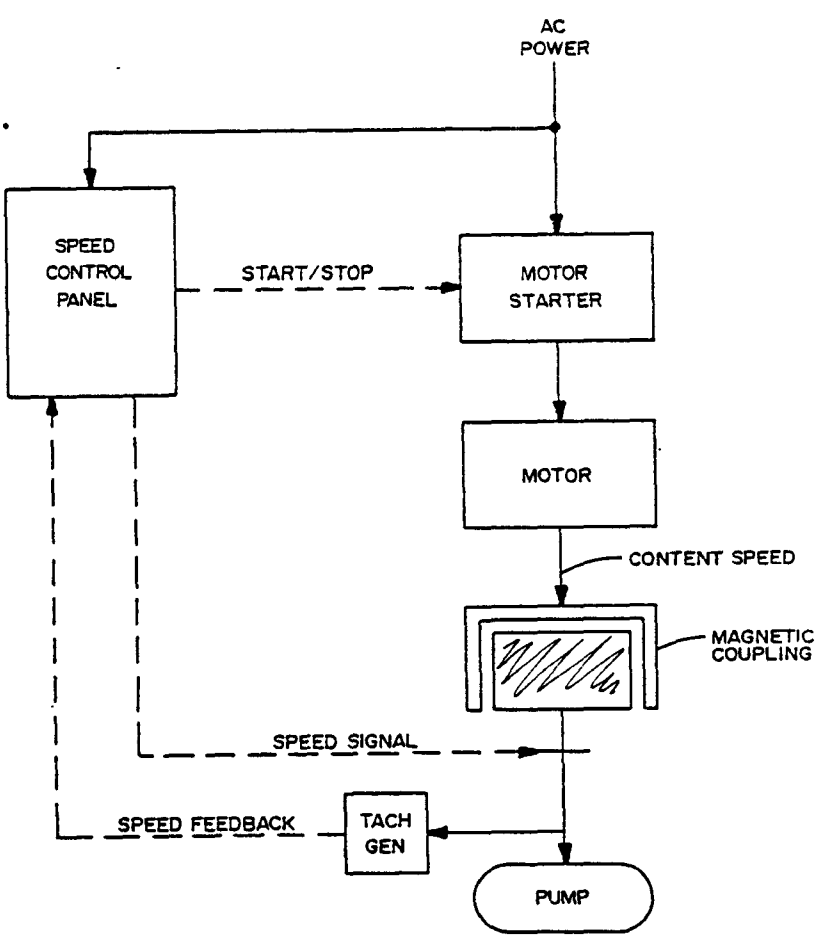

Figure 9.1. Magnetic coupling functional block diagram.

C. Speed Controllability

Remote speed control by a signal from an external source is available. See Figure 9.2.

Controllability is good, and accurate speed control can be obtained.

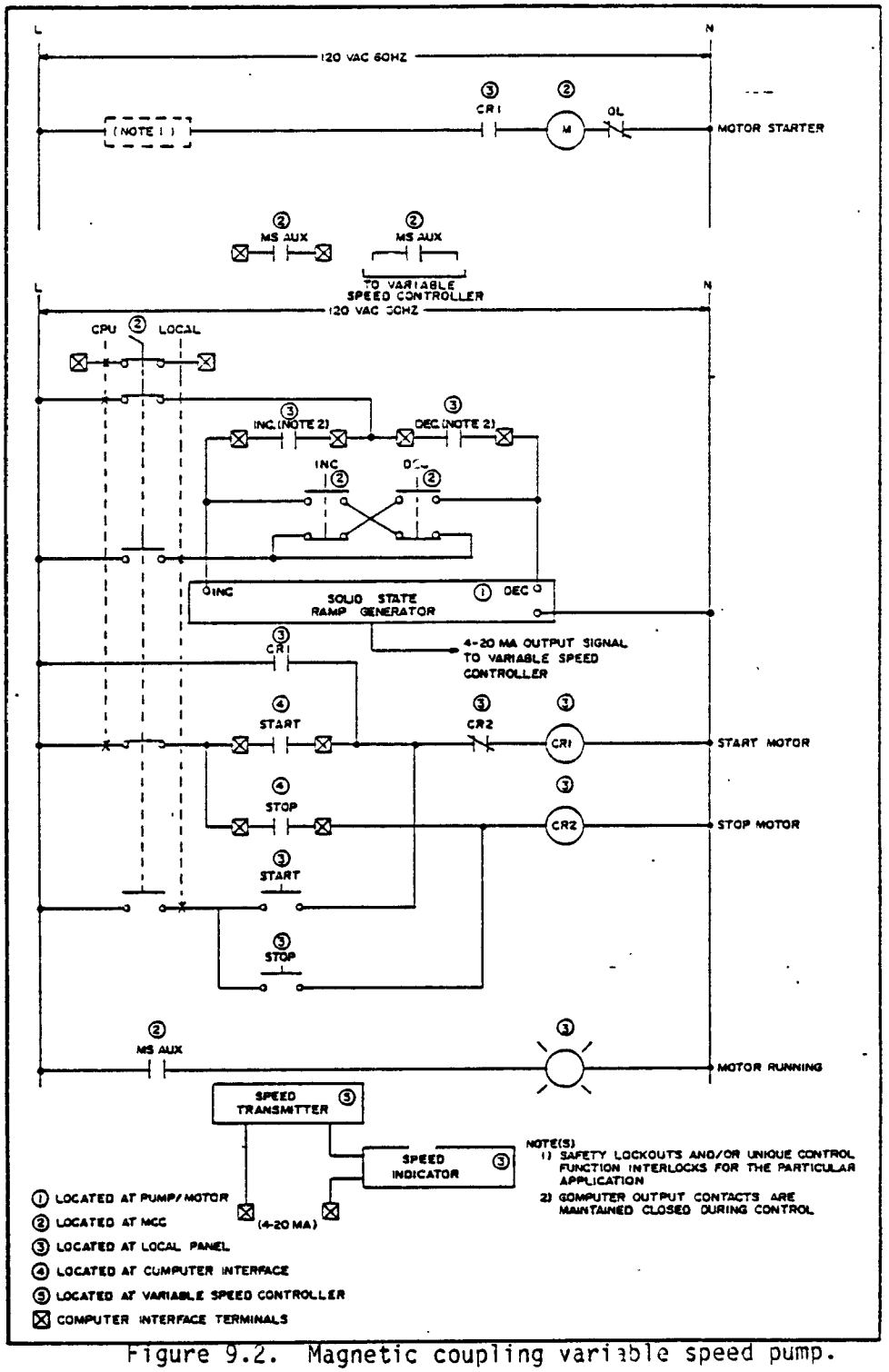

Figure 9.2. Magnetic coupling variable speed pump.

9.2 LIQUID RHEOSTAT

A. Application

Variable speed drives are used for pumping or other mechanical functions that cannot be properly accomplished with a reasonable number of constant speed units. Variable speed drives offer increased flexibility in control. Improved system efficiency can also be obtained where periodic changes in the demand allows reduced horsepower, consequently, offering an energy savings.

A liquid rheostat variable speed drive system uses a wound rotor motor. The motor speed is adjusted by changing the rotor current as determined by the depth in which the rheostat plates are submerged in liquid.

Characteristics of a liquid rheostat variable speed drive are:

1. Uses wound rotor motor.

2. Available in all standard motor sizes from 10 - 750 + KW (15 - 1,000 HP).

3. Not suitable for constant torque loads. A reasonably good drive for variable torque pumping and fan loads.

4. In general, a 2 to 1 speed range is available.

5. Overall efficiencies range from about 85% at full speed down to approximately 45% at half speed.

6. The power factor is poor at low speed.

7. A heat exchanger, with circulating pump, is required to dissipate from the liquid in the rheostat the heat produced by the electrical slip in the motor used to obtain variable speed operation.

8. Maximum speed, with minimum resistance between plates of the liquid rheostat, is about 95% of full speed.

9. Motor starting current can be reduced to less than full-load current by having maximum resistance between plates of the liquid rheostat during startup.

10. Problems with brushes and slip rings on the wound rotor motor occur with moderate frequency.

B. Principle of Operation

Electrical resistance between the liquid rheostat plates determines the wound rotor motor current which regulates the motor speed. The motor speed is adjusted by a change in the depth of the liquid in which the rheostat plates are submerged. See Figure 9.3.

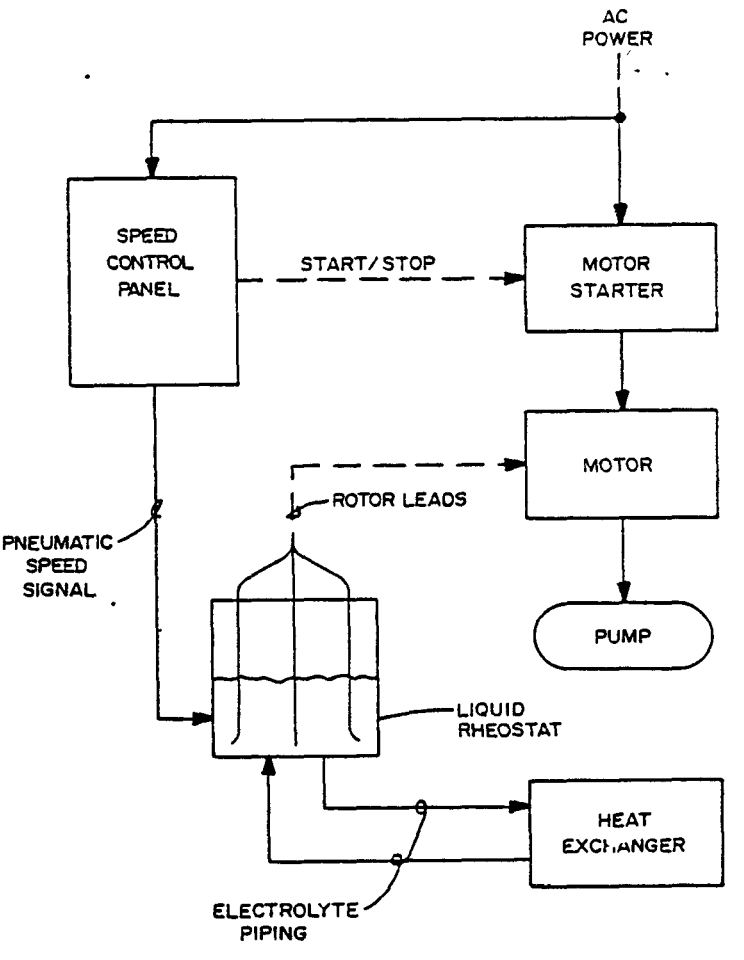

Figure 9.3. Liquid rheostat functional block diagram.

C. Speed Controllability

Remote speed control by a signal from an external source is available. See Figure 9.4.

Controllability is generally good, but accurate speed control is difficult to obtain due to the slow response inherent with the pneumatic interaction required to change the submergence of the rheostat plates in the liquid.

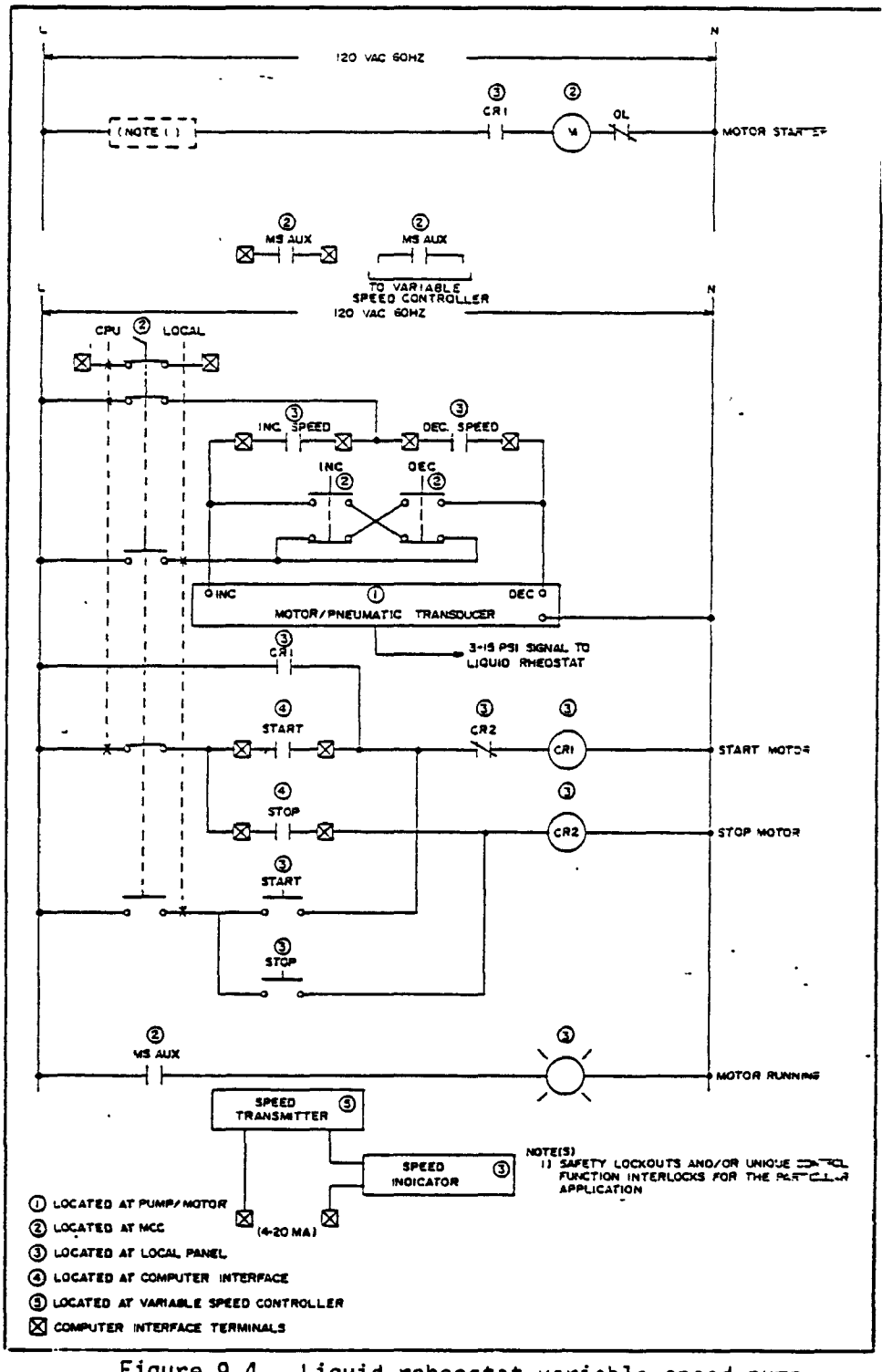

Figure 9.4. Liquid reheostat variable speed pump.

9.3 VARIABLE FREQUENCY

A. Application

Variable speed drives are used for pumping or other mechanical functions that cannot be properly accomplished with a reasonable number of constant speed units. Variable speed drives offer increased flexibility in control. Improved system efficiency can also be obtained where periodic changes in the demand allow reduced horsepower, consequently, offering an energy savings.

A variable frequency drive (VFD) system consists of an induction motor where both the voltage and frequency supply controlled by an electrical inverter to adjust the motor's speed.

VFD's are available for a wide range of standard motor sizes.

Characteristics of a VFD system are:

1. Other than the addition of thermostats in two phases of the stator winding, a standard squirrel cage ac induction motor can be used.

2. All standard motor sizes available from 4 - 400 KW (5 - 500 HP).

3. Suitable for variable torque pumping or fan loads. Normally suitable for piston pumps and conveyors.

4. Continuous operation at constant torque is available over a 3 to 1 speed range.

5. Overall efficiencies are about 83% at full speed down to approximately 75% at half speed.

6. Multiple motors can operate off one common VFD simultaneously. Also, one VFD can control more than one motor where it is switched between motors to give a combination fixed speed and variable speed system.

7. The VFD can convert existing constant speed motors to variable speed operation when retrofitting existing installations.

8. Starting current can be limited to less than full-load current.

9. Requires little maintenance; however, complex components and circuitry require an expert technician when problems do occur.

B. Principle of Operation

The variable speed controller/power converter changes constant frequency, constant voltage line power to variable frequency, variable voltage power to vary the drive motor's speed. Raising the frequency of the power applied to the drive motor increases its speed. Lowering the frequency decreases its speed. Voltage applied to the drive motor is adjusted to control the motor's output power. The variable speed controller compares the drive motor's speed to an adjustable setpoint value and outputs the required frequency and voltage to maintain the desired speed. See Figure 9.5.

C. Speed Controllability

Remote speed control by a signal from an external source is available and is probably the most advanced speed control method available today. See Figure 9.6. Controllability is excellent, and accurate speed control can be maintained.

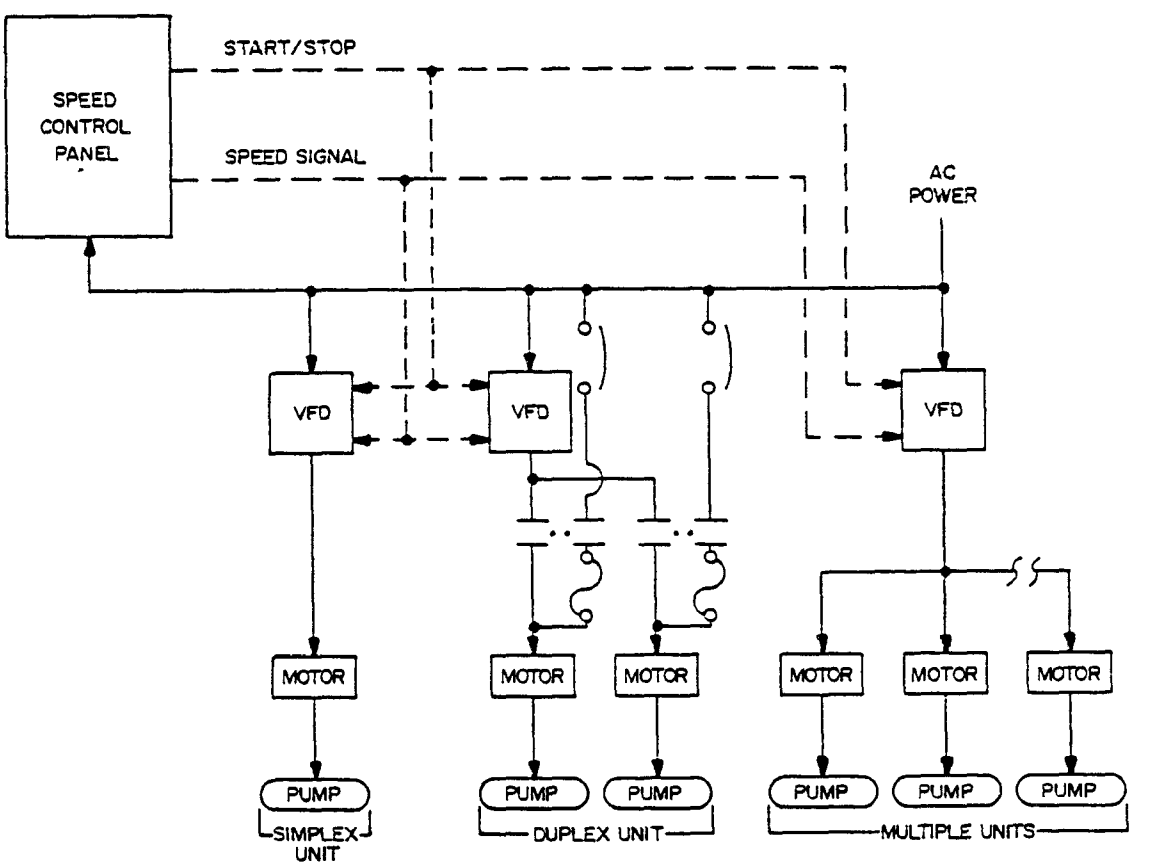

Figure 9.5. Variable frequency drive functional diagram.

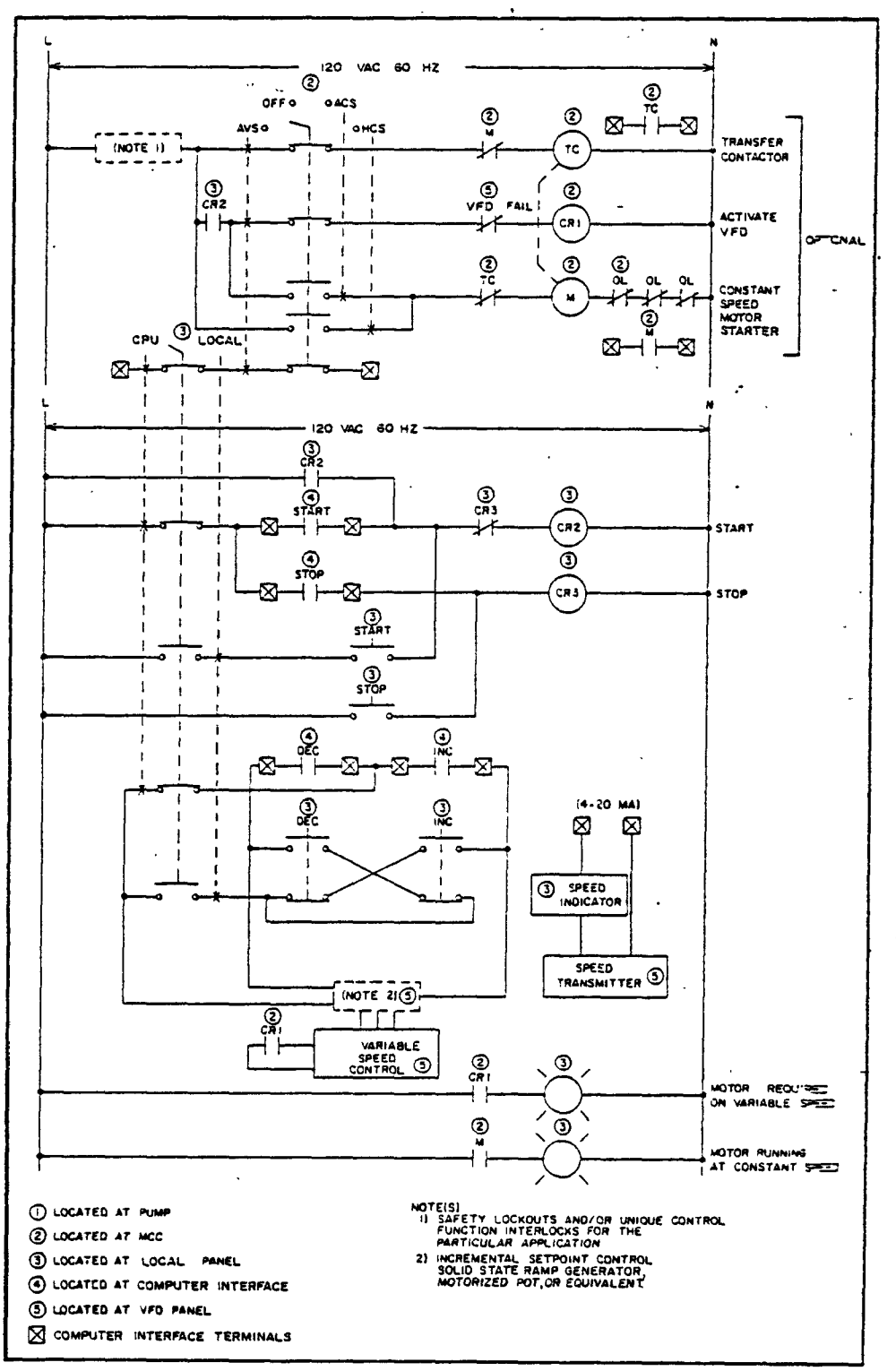

Figure 9.6. Simplex VFD variable speed pump.

9.4 VARIABLE PULLEY

A. Application

Variable speed drives are used for pumping or other mechanical functions that cannot be properly accomplished with a reasonable number of constant speed units. Variable speed drives also offer increased flexibility in control.

Electromechanical variable speed pulley belt drives use a variable sheave ratio principle to change the speed of the final element.

Characteristics of a variable pulley variable speed drive are:

1. Available in all standard motor sizes from 0.2 - 75 KW (1/4 -100 HP), but are normally used only in the lower ratings of 0.4 - 20 KW (1/2 - 25 HP).

2. This is a constant torque drive.

3. In general, a 10 to 1 speed range is available.

4. Overall efficiencies are about 70% at maximum speed down to approximately 45% at half speed.

5. Additional floor space or ceiling height is required as compared to most other drives.

6. Belt life is typically 18 months.

B. Principle of Operation

Variable pulley or electromechanical drives use a constant speed motor coupled to a variable belt drive system for speed control. Output speed is varied by changing the diameter of the drive sheave or pulley. Drive sheave diameter is adjusted using a reversing gear motor connected mechanically to the drive system. When the gear motor operates in one direction, the sheave diameter is increased and the drive speed increases. When the gear motor operates in the other direction, the sheave diameter decreases and the drive speed decreases.

C. Speed Controllability

Remote speed control by a signal from an external source is available. See Figure 9.7.

Potential operational problems holding a speed setting can be numerous due to belt wear, belt stretching, and groove-worn pulleys. Small stepless speed adjustments are difficult to obtain (and maintain).

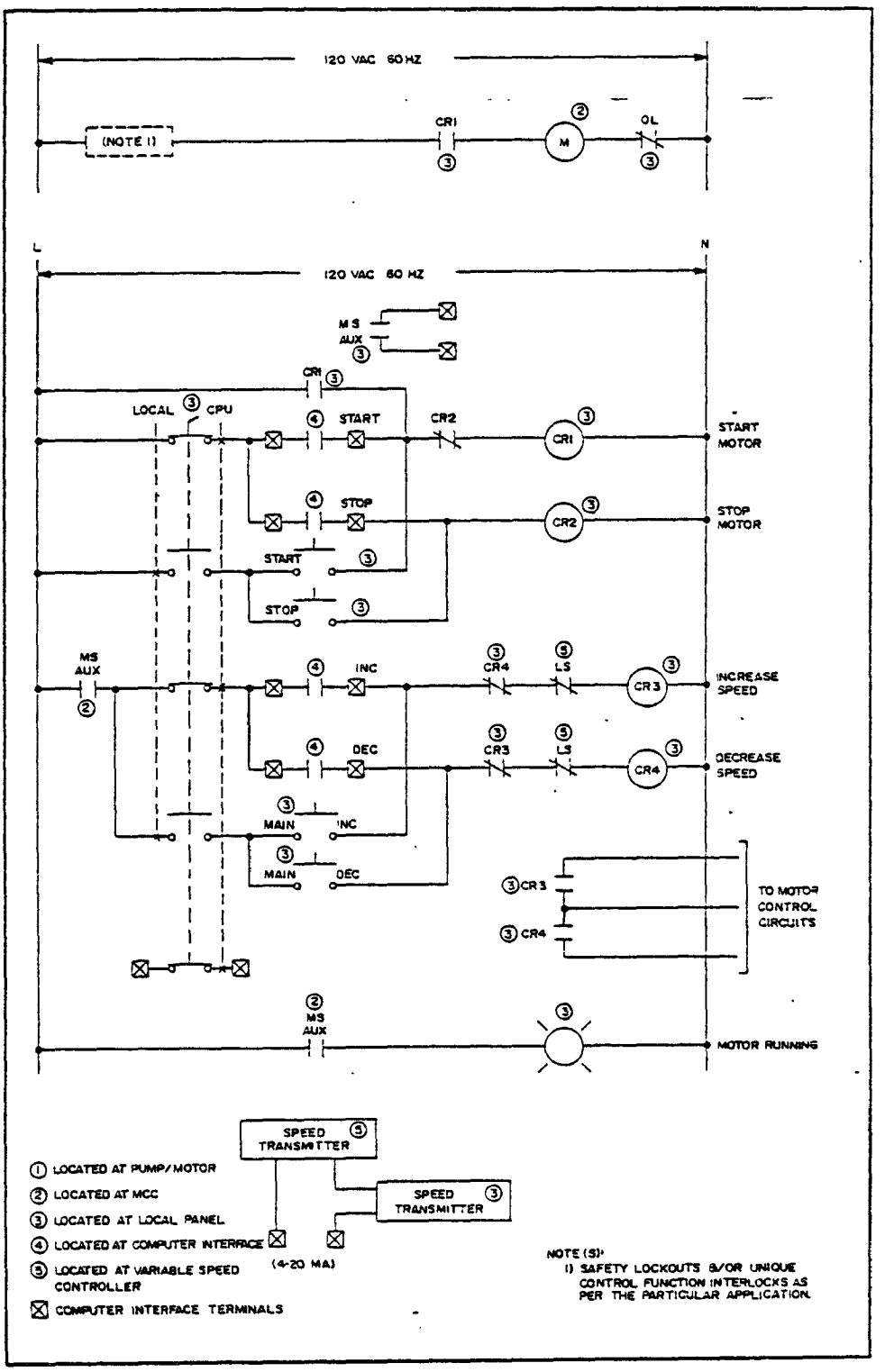

Figure 9.7. Variable pulley drive control circuit.

9.5 DIRECT CURRENT SILICON CONTROLLED RECTIFIER (SCR)

A. Application

Variable speed drives are used for pumping or other mechanical functions that cannot be properly accomplished with a reasonable number of constant speed units. Variable speed drives offer increased flexibility in control. Improved system efficiency can also be obtained where periodic changes in the demand allows reduced horsepower, consequently, offering an energy savings.

Variable speed control of dc motors is achieved by varying the armature or field voltage to the motor, or both.

Characteristics of dc variable speed drives are:

1. DC motors are considerably more expensive than comparable ac motors.

2. In general, for treatment plant applications, drives are available from 4 - 100 KW (5 -150 HP).

3. Can be used for variable torque operation. Usually suitable for piston pumps and conveyors.

4. In general, a speed range of 60 to 100% is available.

5. Reduced speed efficiency is very good.

6. The dc motor has a commutator and brushes, both potential maintenance problems.

7. Commutators on dc motors can cause problems if they are not well ventilated and properly maintained or if they are subject to a corrosive environment.

8. Drive requires little maintenance; however, complex components and circuitry require an expert technician when problems do occur.

9. Starting current can be limited to less than full-load current.

B. Principle of Operation

The term SCR drives is defined as variable speed drives that are based on the use of a dc motor. SCR drives include a speed controller that uses an SCR controlled bridge circuit to rectify constant voltage ac line power to variable voltage dc power. Variable voltage dc power is applied to the dc motor to regulate its speed. As the applied voltage increases, the motor speed increases as the voltage decreases, the speed decreases. SCR speed controllers accept an input signal representative of the desired motor speed and provide a dc output sufficient to operate the motor at the required speed.

C. Speed Controllability

Remote speed control by a signal from an external source is available. See Figure 9.8.

Controllability is good, and accurate speed control can be maintained.

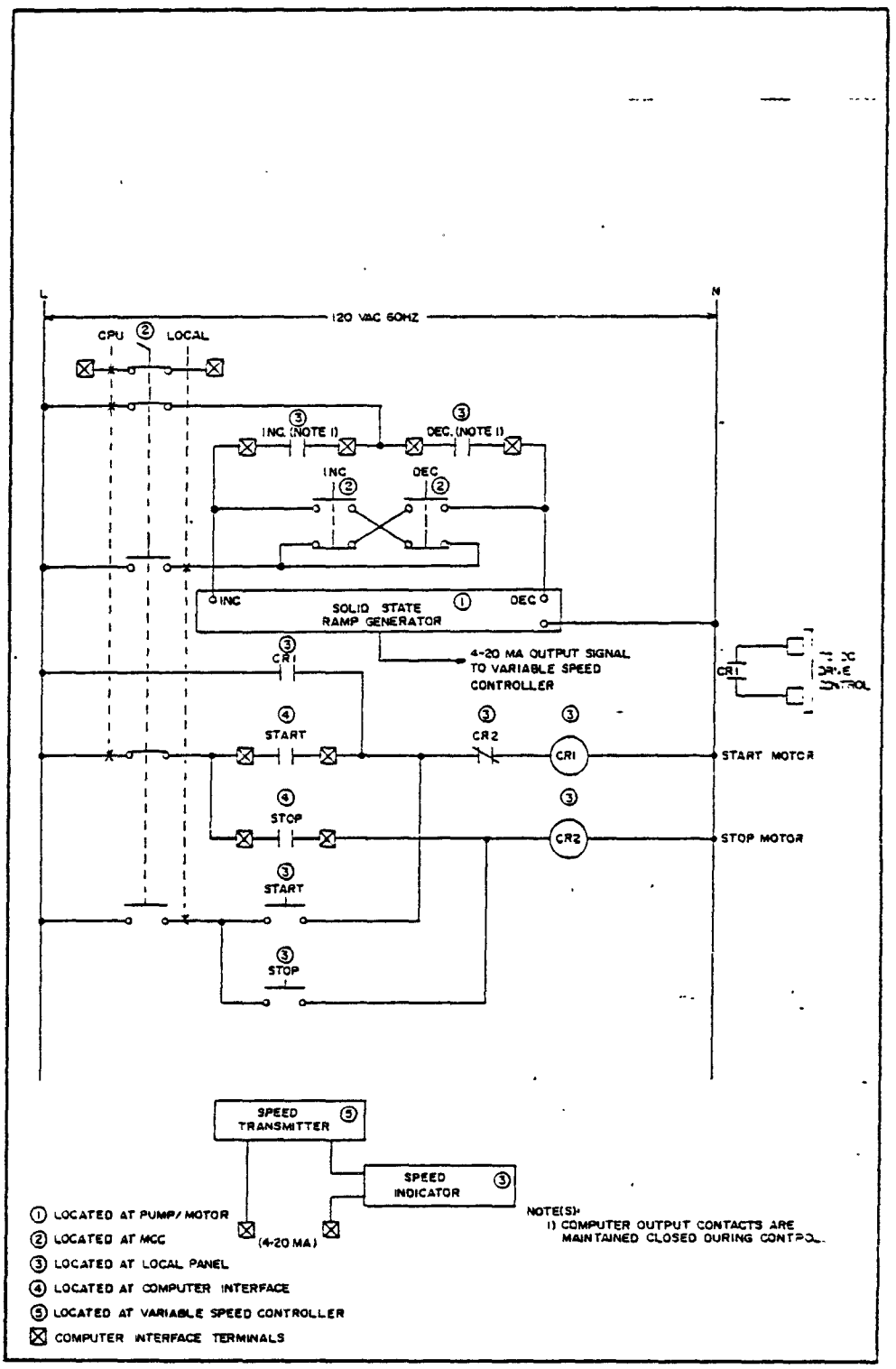

Figure 9.8. DC variable speed drive.

10.0 CONTROL VALVES

10.1 MODULATING SERVICE

A. Application

Control valves for modulating service are used in all wastewater treatment processes. Excluded from this discussion are valves used in isolation or routing service in two states; open or closed. Commonly used control valves are compared in Table 10.1. Their applications are presented later in the text and in Table 10.2.

TABLE 10.1. COMPARISON OF CONTROL VALVES IN WASTEWATER TREATMENT PROCESSES

Valve Type		Cost
Ball (Rotary)	- High pressure recovery - Tight shutoff - Equal percentage flow characteristic - Available with flangeless connection - 1-24 inch sizes	Low cost
Butterfly (Rotary)	- High pressure recovery - Equal percentage flow characteristic - Good shutoff - Usually a flangeless connection - 2-144 inch sizes	Lowest cost
Gate (Linear)		Not usually used for modulating service
Globe (Linear)	- Low pressure recovery - Choice of flow characteristics - Good shutoff - Usually small size applications - 1/2 - 16 inch sizes	High cost
Eccentric Plug (Rotary)	- Equal percentage and linear flow characteristics available - Good shutoff - Moderate pressure recovery - 2-24 inch sizes	Moderate cost

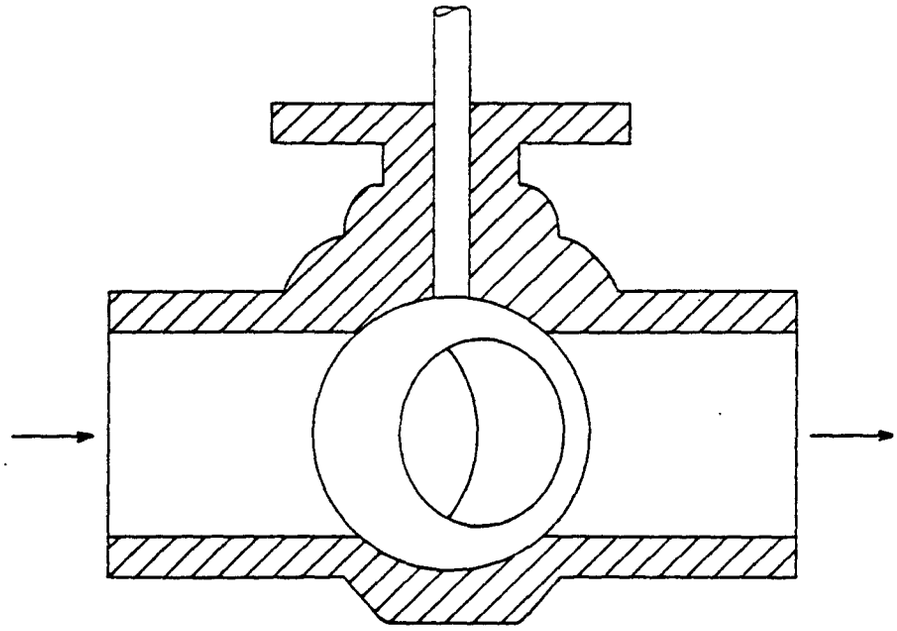

BALL VALVE

Figure 10.1. Ball valve.

B. Principle of Operation

Control valves (modulating service is implied in this term) are made in a wide variety of designs. Five designs used in wastewater control applications are presented here. There are many, many other designs, but this discussion will make you aware of some of the problems encountered in control valves.

1. Ball valves.

Valves are classified as either "rotary" or "linear." In a rotary valve, the ball, disk, or plug is rotated to open or close the flow stream. A linear valve lifts the gate, disk or plug up or down to open or close the flow stream. Ball valves are rotary. Flow goes through a port in the ball. To shut off flow, the ball is rotated until the port is closed. The ball may be a complete sphere, full ball, as shown in Figure 10.1, or a partial sphere. Standard port diameters range from 80% of inside pipe diameter to 100% or full port.

Ball valves have high friction resistance to rotation due to valve body and trim contact with the ball surface. This gives a tight shutoff at the expense of needing larger actuators. In some designs the ball is allowed to "float" in its seat so that line pressure will assist keeping a tight shutoff by pushing the ball against the downstream seal ring. This freedom of movement introduces a deadband between the actuator and the ball. The deadband will make this design unusable for many control applications. For control valves, a rigid ball to actuator connection is preferred.

2. Butterfly.

Butterfly valves are rotary type valves that use an axially pivoted disk to restrict or open the flow stream. The disk may be flat or contoured in shape and mounted to the stem (pivot) in several ways. An example is profiled in Figure 10.2.

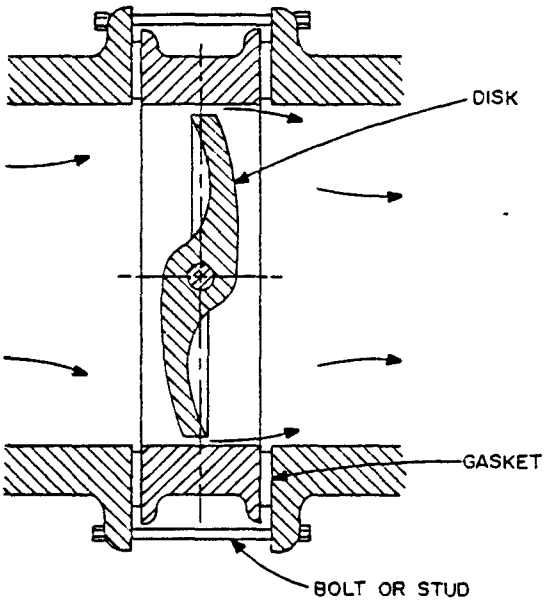

Figure 10.2. Butterfly valve, swing-through type with flangeless pipe connection.

One problem with butterfly valves is obtaining a tight shutoff. The seal must be made along the entire inner circumference of the valve body. Upper and lower half seats must be matched and the pivot point must be sealed. Liners and seals used for good shutoff increase the opening and closing torque requirements of the actuator.

Another problem encountered in butterfly operation is torque applied by the fluid. During rotation of the disk, torque reaches a maximum at about 70 degrees (from full open). This is shown in Figure 10.3. In some applications this peak may exceed the opening or closing torques. To overcome this problem, disks are contoured for low torque in the near closed positions.

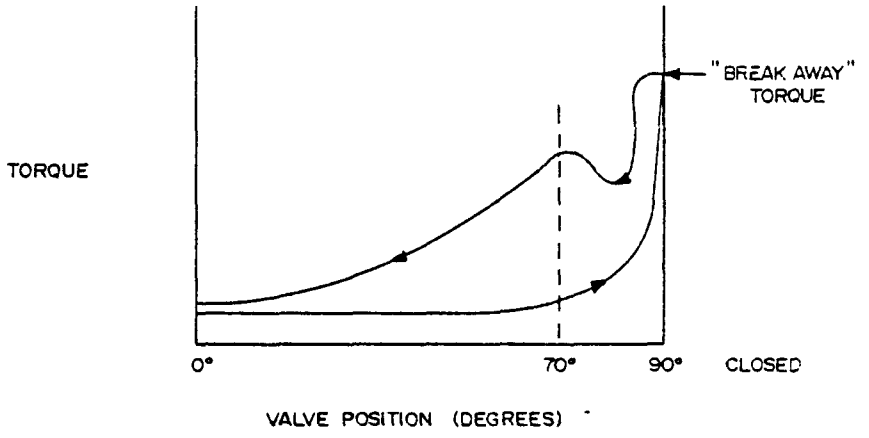

Figure 10.3. Butterfly torque.

3. Gate.

Gate valves are linear valves in which the gate's disk is raised or lowered past a port by the actuator. The disk is a flat or wedged-shaped plate. The valve may have one or several ports for flow which can be sealed by the plate. A gate valve is shown in Figure 10.4. In knife-gate valves, plates are made with a sharp edge for service with solids bearing streams including dry solids. Gate valves are not usually used for modulating service.

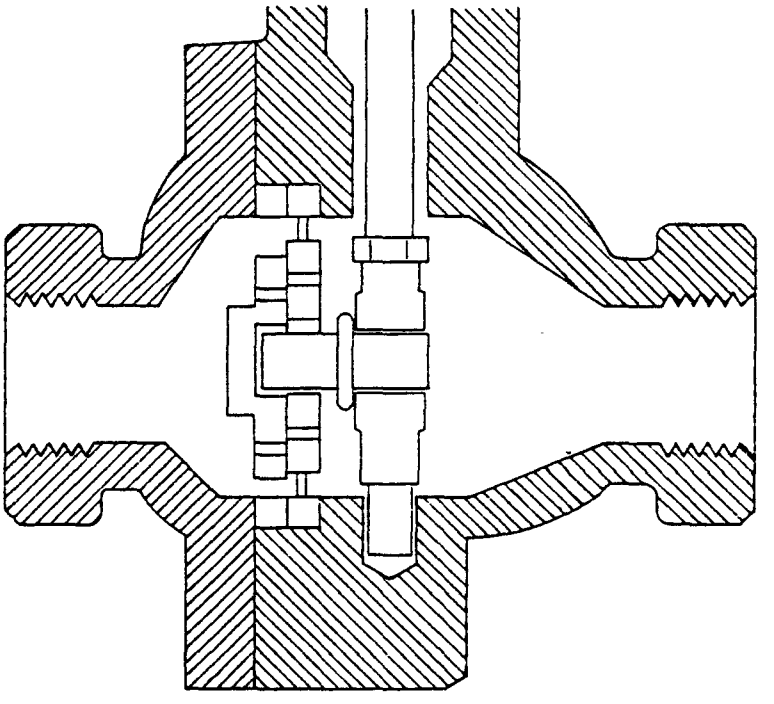

Figure 10.4. Gate valve, multi-orifice.

4. Globe.

Globe valves are linear valves in which the plug moves up or down into a port. Some valves have two sets of plugs and ports, these are called double ported. In order to reduce stem size and to obtain better seating of the plug on the port, the stem or plug is mechanically guided. An example of a globe valve is shown in Figure 10.5.

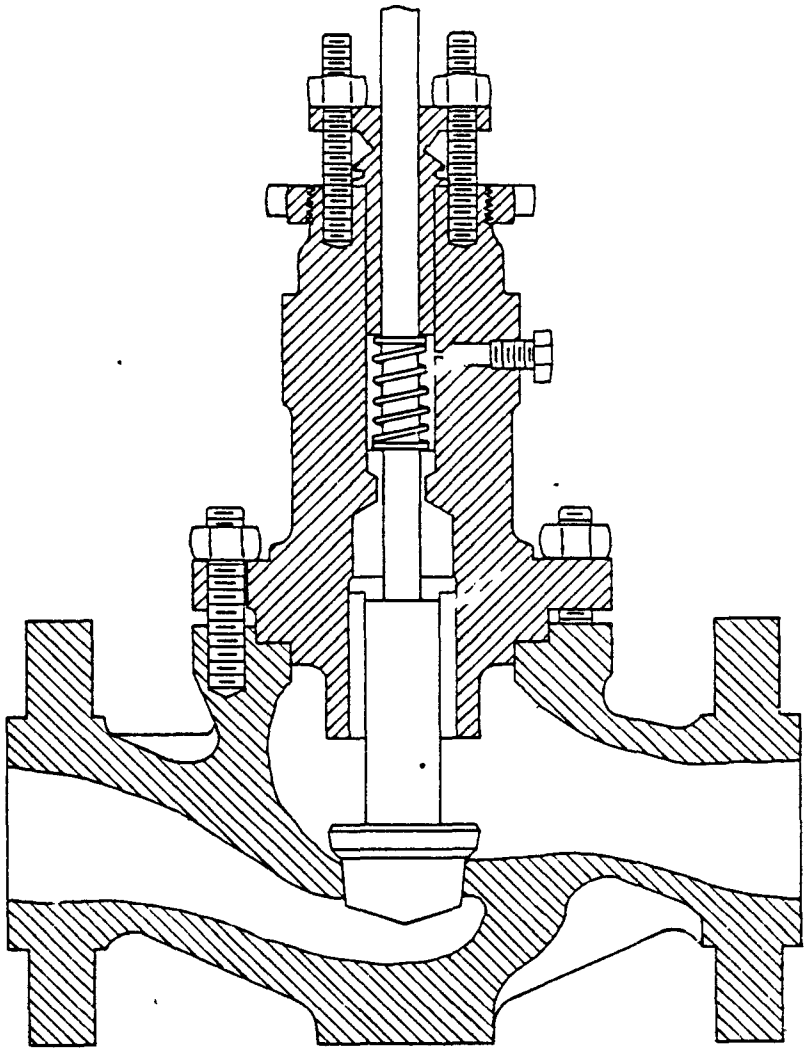

Figure 10.5. Globe valve.

Actuator size can also be reduced for double ported valves with balanced flow. The ports and plugs are aligned such that the flowing stream tends to close one port and open the other, thus balancing the fluid forces.

5. Plug.

Plug valves are rotary type valves with a conical or cylindrical shaped plug which has an orifice. Rotating the plug at a right angle to flow causes tight shutoff while full flow occurs when the orifice of the plug is parallel to the flow axis. A simple plug valve is shown

in Figure 10.6. In the same figure is a popular version of the plug valve, the eccentric spherical plug or "camflex" valve. Just as a traditional plug valve is similar to a traditional ball valve, the eccentric spherical plug is similar to the segmented ball valve. Both newer designs provide large flow for the valve size and high pressure recovery yet have reduced friction through most of the valve travel.

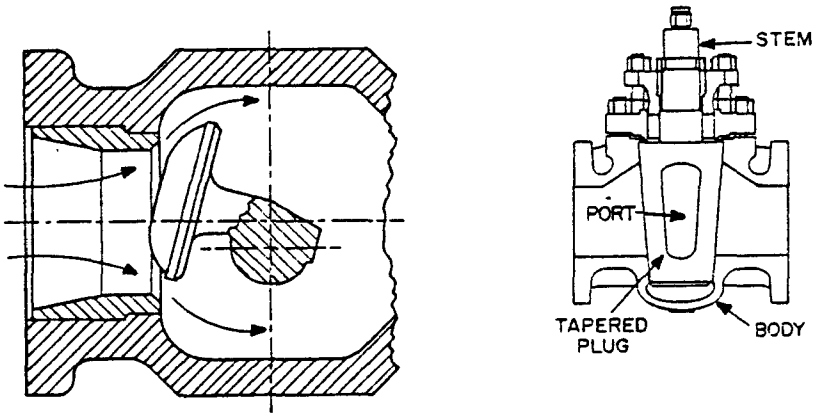

AN ECCENTRIC ROTARY VALVE PLUG

TRADITIONAL PLUG VALVE

Figure 10.6. Plug valves.

C. Valve Size

Control valves are rated by a "Cv" factor which is the amount of water at 15°C (60°F) or any liquid with a specific gravity of 1.0, that goes through a full open valve at a pressure differential of 6.89 kPa (1 psi). The Cv factor is found in the general flow equation below.

$$Q = Cv \sqrt{\frac{\Delta P}{S.G.}}$$

Q = flow, gpm
Cv = valve factor gpm/(psi) $^{1/2}$
P = pressure differential, psi
S.G. = specific gravity

While this flow equation is not restricted to English units of measure, the Cv values available for valves in this country are only for English units. To use kPa for pressure multiply manufacturer's English Cv values by conversions in Table 10.2.

TABLE 10.2 Cv CONVERSION FACTORS

Cv x conversion factor	=	flow in units
1.44	=	lpm
0.0862	=	m 3/h
0.00144	=	m 3/m
0.0000239	=	m 3/s

The metric conversion factors also convert to a specific gravity at 4°C. For most wastewater treatment processes the liquid is water at 5-25°C (41-77°F) so the specific gravity factor will cause less than 0.5% correction and will be deleted from further discussion here. Additional correction factors for viscosity and critical flow and compressibility for gas flow may be needed. These factors and how to apply them are found in manufacturer's literature. For a complete explanation of valve sizing see the ISA text books referenced at the end of this section.

In sizing a valve for wastewater treatment processes, usually the range of flows is known. A safety factor of 110% of maximum flow, or 130% of average flow is commonly used in the sizing calculations. Another way to add a safety factor is to make calculations using 100% of maximum flow, but selecting a valve that will do the job at 90% of its rated capacity (i.e., 0.9 Cv). Once the pressure drop over the valve is determined, the valve size can be calculated by rearranging the above equation. Traditional sizing rules for control valves in pump systems call for 33% of system pressure loss to be at the valve. This and other rules of thumb are shown in Figure 10.7. The lost energy is not wasted, but is used to reduce flows to the control setpoint.

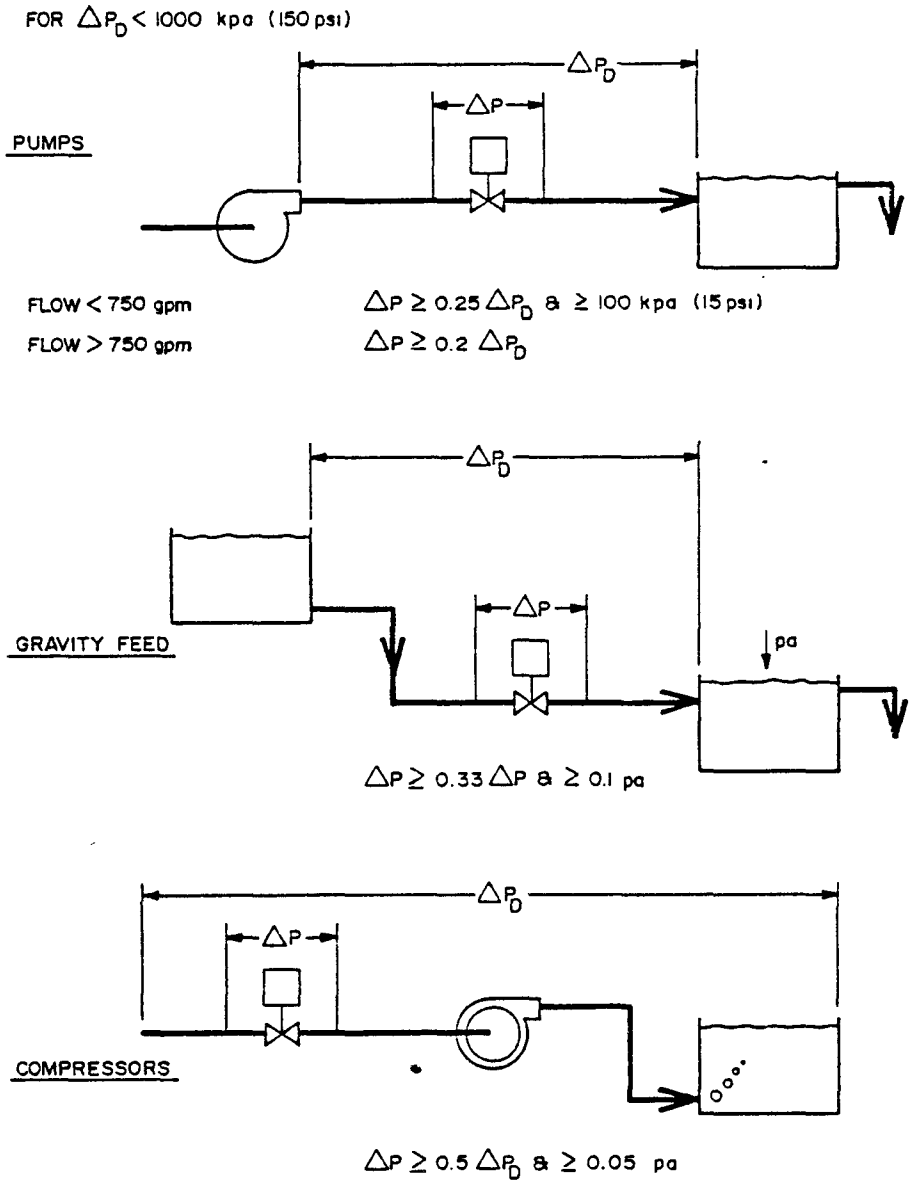

Figure 10.7. Traditional pressure drops for control valves.

This rule of thumb is not particularly energy efficient and should be replaced for large sized flow streams where the energy cost is significant. Allotting less head loss to the control valve will tend to increase the valve size up to full line size, and will restrict the choice of valves to those with high capacity (e.g., butterfly or ball). Reducing head loss at the valve calls for more careful design than otherwise because there is less safety factor. The risk is that the valve will be oversized for the application. In a severe case, the valve may have to operate nearly closed to achieve the setpoint flow, which may make satisfactory flow control impossible. To help understand sizing of valves, lets review two fundamentals: pressure drop and valve gain and characteristic.

Pressure differential or drop across a valve is proportional to the square of flow. This is the same relationship that occurs in differential pressure flow meters: orifices and venturis. The pressure profile across a valve is similar to an orifice or venturi, and is shown in Figure 10.8. Similarly the flow is dependent on the pressure difference measured from upstream to the vena contracta. Due to the impracticality of measuring vena contracta pressure, control valve flow equations and sizing principles are established based on upstream and downstream pressures. The relationship between vena contracta and downstream pressure is normally a constant proportion expressed as:

$$\Delta P = F_L^2 (P_1 - P_{vc})$$

where:

ΔP = Difference between upstream and downstream pressures, kpa (psi)
P_1 = Upstream pressure, kpa (psi)
P_{vc} = Pressure at vena contracta, kpa (psi)
F_L = Pressure recovery factor, unitless

This relationship does not hold during conditions of cavitation or flashing in liquids or at sonic velocities in the vena contracta in gases. In these cases choked or partially choked flow occur. When sizing valves for low head loss, choked flow and related phenomena are not likely problems except where the vapor pressure of a liquid approaches the vena contracta pressure as in hot water for example. See the reference publications for further information.

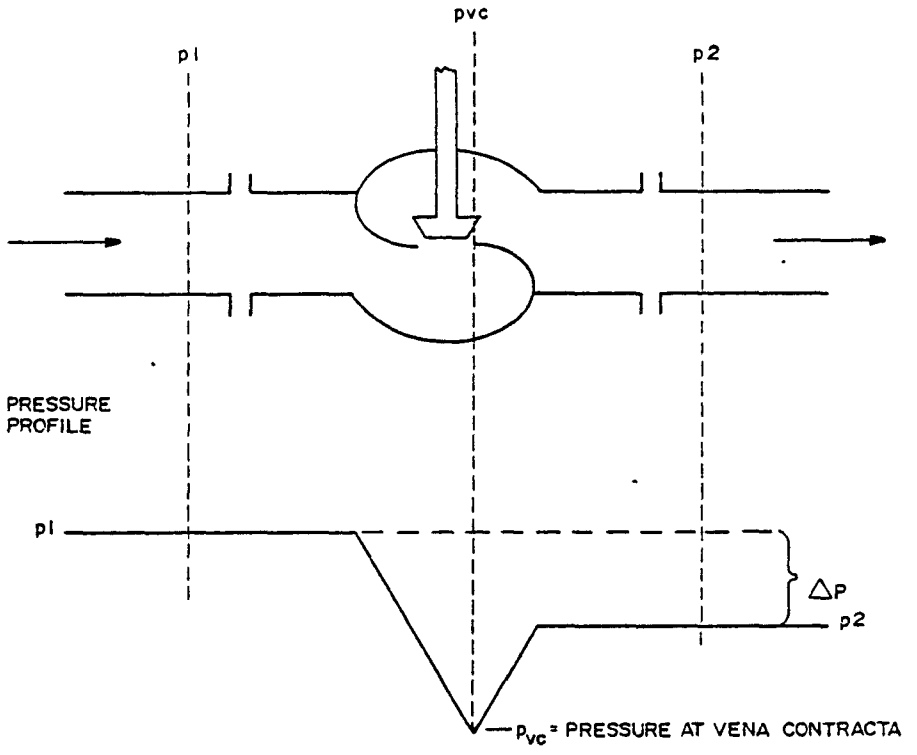

$$\Delta P = F_L^2 (p_1 - p_{vc})$$

F_L IS THE PRESSURE RECOVERY FACTOR

Figure 10.8. Pressure drop across a valve.

The recovery factor, F_L, is combined with other factors to form the Cv numbers reported in manufacturer's literature. Therefore, the pressure difference of most use in sizing valves is the permanent pressure loss, ΔP.

The second fundamental for review is valve gain and characteristic. Valve gain is defined as the change in flow caused by a change in valve position and may be dependent on valve position. The way in which valve gain changes with valve position falls into three basic characteristics:

- Equal percentage - equal changes of valve position cause equal percentage changes in flow.

- Linear - flow changes linearly with valve position.
- Quick opening - flow changes rapidly with valve position at low valve position, but only slightly at higher valve positions. Most of the valve capacity is reached after opening just a small amount.

These three characteristics are shown in Figure 10.9.

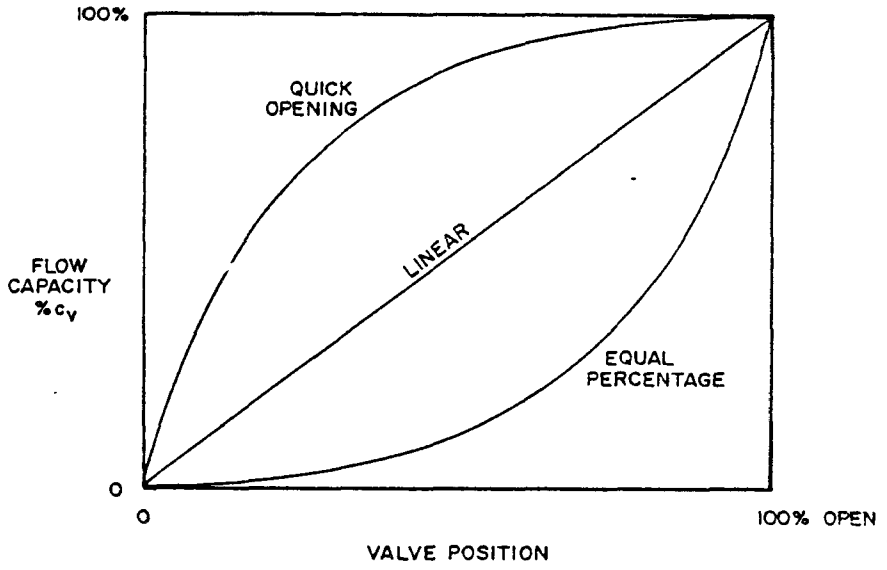

Figure 10.9. Intrinsic valve characteristics.

When these terms are used to describe a valve they are called intrinsic or inherent flow characteristics. They represent the gain dependence on position in cases where the total dynamic head loss of a system occurs at the valve. As less proportion of system head loss occurs at the valve, the flow characteristic shifts to a relationship called the installed characteristic. This shift is shown in Figure 10.10 for linear and equal percentage valves. Shift in gain is shown in Figure 10.11.

At control valve head losses traditionally used for valve sizing, P/P_D - 0.2 to 0.33, "linear" valves approach quick open response, and "equal percentage" valves approach linear response. In cases where head loss at the valve is to be reduced to a minimum, the shift in valve response is even greater. When viewing Figures 10.10 and 10.11 keep in mind that the ratio of valve head loss to total dynamic head loss will not be the same at all flows. This is shown in Figure 10.11. For most of the flow range a valve will be close to its intrinsic characteristic or gain, but near maximum flow the installed characteristic or gain will shift.

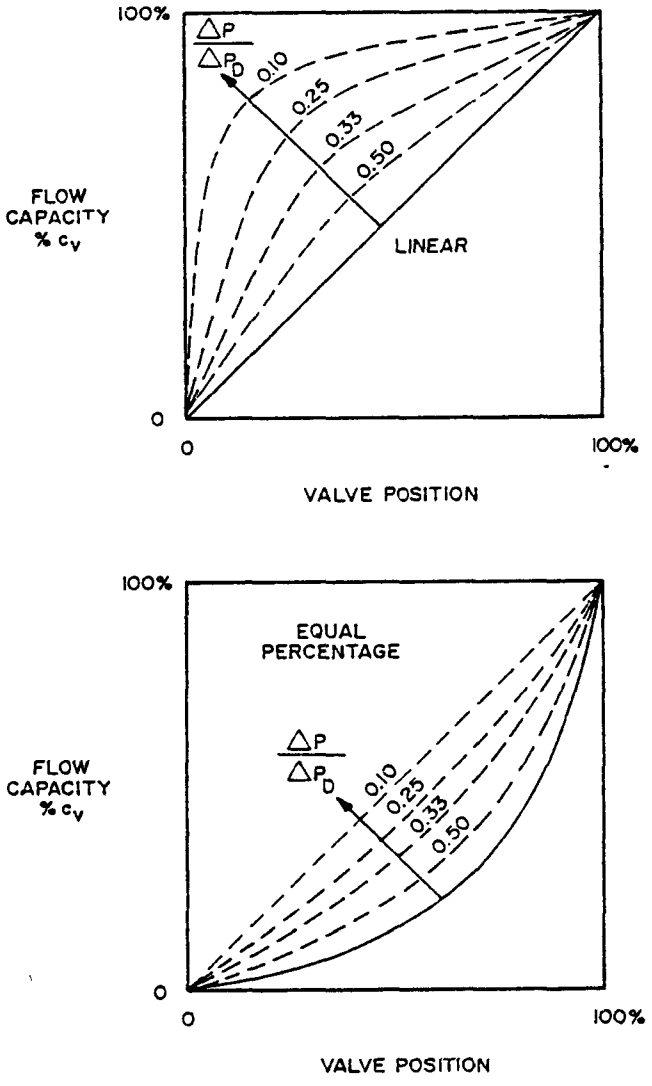

Figure 10.10. Valve characteristic shift with decreasing ratio of valve pressure loss to system dynamic pressure.

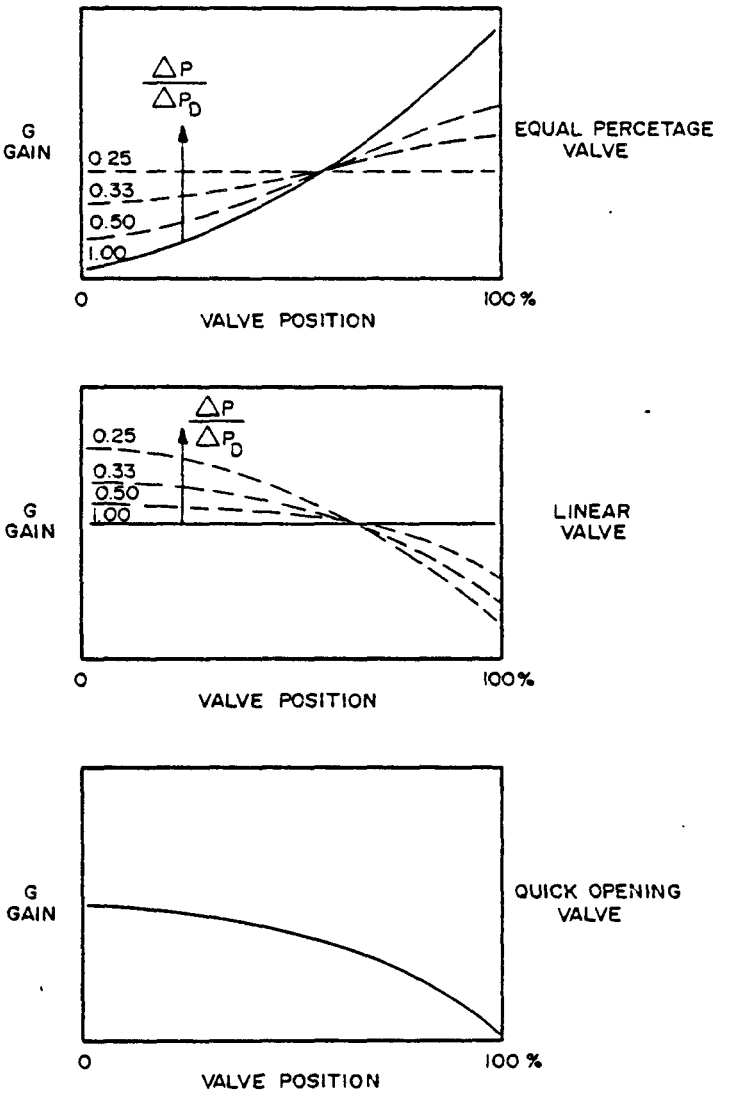

Figure 10.11. Installed valve gain.

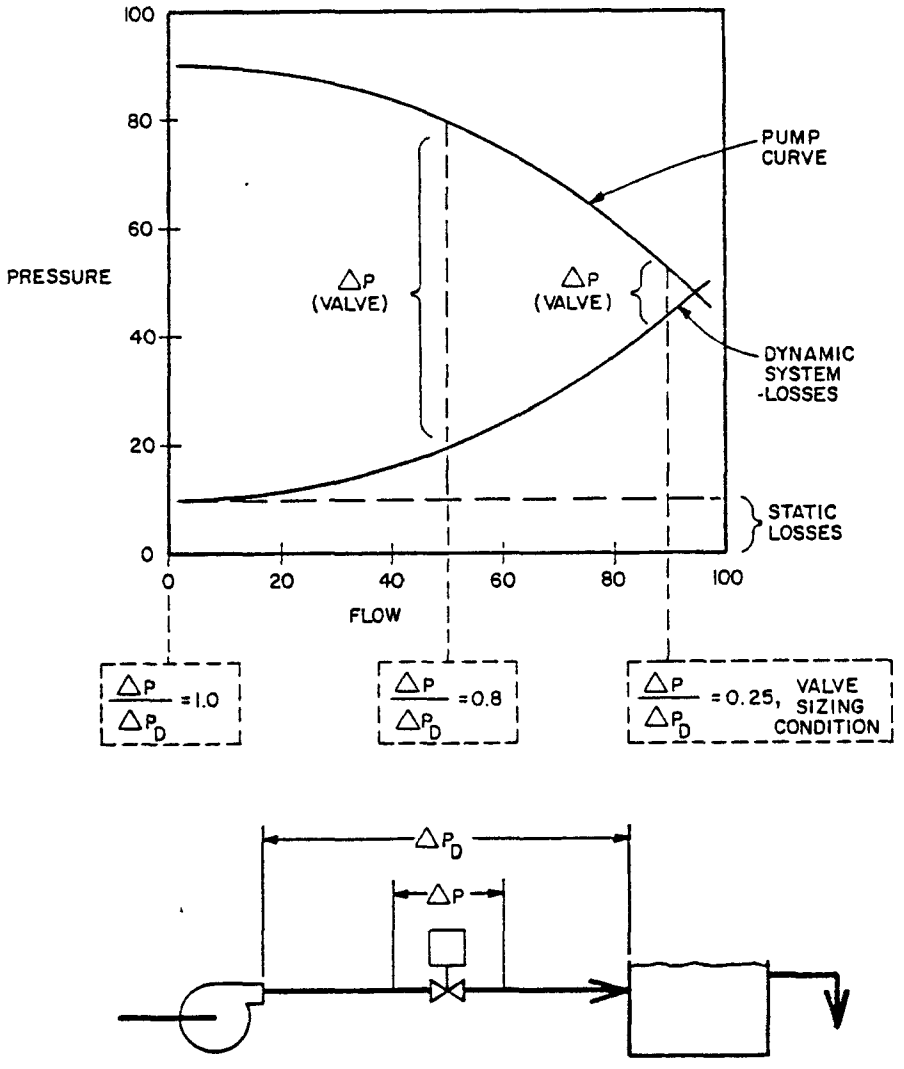

Figure 10.12. Valve pressure drop in a pumping system.

Gain analysis is further complicated by the behavior of real valves which although they may exhibit a general type of characteristic, the actual installed characteristic will deviate from the ideal. This is specially true at the limits of valve travel. Generally, a valve will only provide acceptable control over a range of performance. This range may be expressed as a ratio of high to low flows, high to low valve position, or high to low valve capacity, Cv. The last measure of rangeability is the most useful in selecting a valve. Using the sizing equation, rangeability requirements may be calculated by:

$$\text{Rangeability} = \frac{C_{VH}}{C_{VL}} = \frac{Q_L}{Q_L} \sqrt{\frac{\Delta P_L}{\Delta P_H}}$$

Where the subscrips H and L indicate high and low flow rate conditions.

Putting together all valve gain considerations discussed so far results in a plot of gain versus valve capacity as shown in Figure 10.13. The valve is a cage-guided, equal percentage globe valve with flow tending to open which is used to throttle a centrifugal pump. The application called for two thirds of the total system dynamic pressure losses at maximum flow to occur at the valve. Therefore, the valve should be close to its intrinsic characteristic throughout its operation. Note that the installed characteristic is only equal percentage from about 7 to 70% of valve capacity. If the change in characteristic outside of this region of equal percentage is detrimental to control of the process, the rangeability is 70 to 7 or 10 to 1.

The concern for predicting valve gain centers around obtaining stable control. That is, the system should respond to load and setpoint changes with desired dampening and response time. A general rule to follow is that the valve gain should act opposite to the process gain to produce as linear a combination as possible. For example, consider a flow control situation where the flow rate is measured by a differential pressure element. This follows the previously stated principle that flow is proportional to the square root of pressure difference. Therefore its gain increases with flow. A quick opening valve has a gain that decreases with flow and would be a suitable valve choice. A linear valve could also be used if the system operated near the maximum flow, in which case the installed linear valve characteristic would be similar to quick opening. If the flow transmitter signal was sent to a square root extractor and then to the controller, the meter's gain would be constant. In this case, select a linear valve for operation near the intrinsic characteristic, or select an equal percentage valve for operation near the maximum flow.

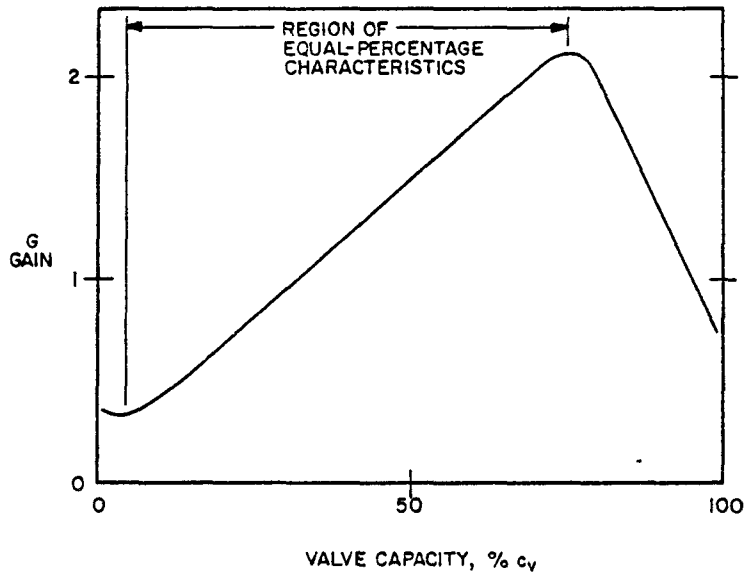

Figure 10.13. Gain of a single ported globe valve.

Table 10.3 contains a recommendation of valve characteristic for several control applications. If there is doubt about how much installed characteristic to allow for, or which condition overrides choose equal percentage over linear, and linear over quick-opening.

TABLE 10.3. VALVE CHARACTERISTIC SELECTION GUIDE

CONTROL APPLICATION	CONDITIONS OF APPLICATION	VALVE CHARACTERISTIC
Flow	o Linear flow signal	Linear
	o Differential pressure signal	Quick-opening
	o Small flow range, large pressure drop changes	Equal percentage
Level	o Most applications	Linear
Pressure	o Liquid	Equal percentage
	o Gas with large pressure drop	Equal percentage
	o Gas in fast responding system	Equal percentage
	o Gas in slow responding system	Linear

D. Manufacturer's Options

1. Body styles are available as presented above and in a wide selection of variations. Consult manufacturer's literature for available valve bodies.

2. Materials of body construction:

   a. Iron,

   b. Carbon steel,

   c. Stainless steel, and

   d. Hastelloy.

3. Materials of trim and plug construction:

   a. Carbon steel,

   b. Stainless steel,

   c. Brass,

d. Copper,

e. Monel, and

f. Other speciality materials are available.

4. Stem packing materials:

a. TFE, and

b. Graphite at high temperatures.

5. Pipe connections:

a. Threaded,

b. Flanged, and

c. Flangeless (wafer).

6. Body liner material:

a. Teflon,

b. Buna-N, and

c. Viton.

7. Trim:

Trim is available in many configurations for each valve type and varies by manufacturer.

8. Bonnet:

Bonnet designs are also varied according to manufacturer.

E. References

1. "Advances in Water and Wastewater Valves." Consulting Engineer, September, 1982, p. 105.

2. Boger, Henry W. "The Effect of Installed Flow Characteristic on Control-Valve Gain." ISA Transactions, Vol. 8, No. 4, 1969, p. 265.

3. Ramsey, John R. and Charles D. Fournier. "Matching Valves with Process Requirements." Instrument and Control Systems, June 1973, p. 65.

4. Hammit, Donn. "Choosing a Control Valve is Easy." Instrument and Control Systems, December 1976, p. 28.

5. Moore, Ralph W. "Allocating Pressure Drops to Control Valves." Instrumentation Technology, October 1970, p. 102.

6. Baumann, Hans D. "How to Estimate Pressure Drop Across Liquid - Control Valves." Chemical Engineering, April 29, 1974, p. 137.

7. Kern, Robert. "Control Valves in Process Plants." Chemical Engineering, April 14, 1975, p. 85.

8. Rezac, Mark A. and Kevin F. Bornhoft. "Choose the Right Control Valve for the Job." In-Tech, October, 1980, p. 59.

9. Vendor Literature from: Fisher Controls, Masoneilan International and Pratt Valve.

10. Driskell, Les, Control Valve Sizing, ISA, 1982.

11. Driskell, Les, Introduction to Control Valves, ISA, 1981.

12. Driskell, Les, Selection of Control Valves, ISA, 1982.

13. Chaflin, Sanford. "Specifying Control Valves." Chemical Engineering, October 14, 1974, p. 105.

14. Wolter, D. G. "Control Valve Selection." Instrumentation Technology. October, 1977, p. 55.

15. Wing, Paul. "Plain Talk on Valve Rangeability." Instrumentation Technology, April, 1978, p. 53.

11.0 CONTROL VALVE OPERATORS

11.1 ELECTRIC

A. Application

Characteristics of an electric control valve operator are:

1. Normally economical only in relatively small torque requirements.

2. Large units requiring high torque generally operate slowly.

3. Large units weigh considerably more than their pneumatic counterparts.

4. Normal fail-safe position action is lock-in-last-state.

5. Major advantage is in remote installations where no other power source (e.g., air supply for pneumatic operators) is available.

TABLE 11.1. ELECTRIC VALVE OPERATORS APPLICATION GUIDELINES

Recommended	Not Recommended
In remote, nonhazardous installations - Pump stations In nonexplosion-hazard processes - Primary treatment - Most secondary treatment - Tertiary treatment - Chlorination For cold or damp environment	In explosion-hazard locations - Digesters - Oxygen plants - Incinerators For hot environment

B. Principle of Operation

1. On/off operation.

Electrically actuated valves use a reversing electric motor to drive a gear box or other mechanical positioning mechanism to open or close a valve. The motor is controlled by relay contacts or a reversing motor starter that is interlocked to stop the valve motor once the valve reaches a fully open or closed position. Adjustable limit switches detect the fully open or closed position of the valve.

Electrically operated valves generally require high-torque cutout switches in series with the reversing starter to prevent damage to the motor and operating mechanism if the valve becomes obstructed or jammed.

2. Modulating operation.

Electrically actuated modulating valves use a reversing electric motor to operate the valve. The motor is controlled by a solid-state reversing motor starter that starts the valve positioning motor in the required direction when a contact closure is initiated. The motor will continue to operate and change the valve position as long as the contact closure is maintained. When the operating contact is opened, the valve positioning motor will stop. A valve position transmitter provides signal conditioning to generate an output signal proportional to the valve position.

C. Valve Operation

Valves can be operated using optional pushbuttons mounted in the operator or from a remote position control. Controllability is good, and accurate position control can be obtained.

Figure 11.1 provides an example of a typical electrically actuated modulating valve interface.

D. Manufacturer's Options

1. Open/Close limit switches:

   a. Cam-operated, or

   b. Snap action.

2. Position potentiometer typically 0-1000 OHMS to correspond to 0-100% open.

3. Housings:

   a. NEMA 12, dustproof,

   b. NEMA 4, weatherproof, and

   c. NEMA 7, explosionproof.

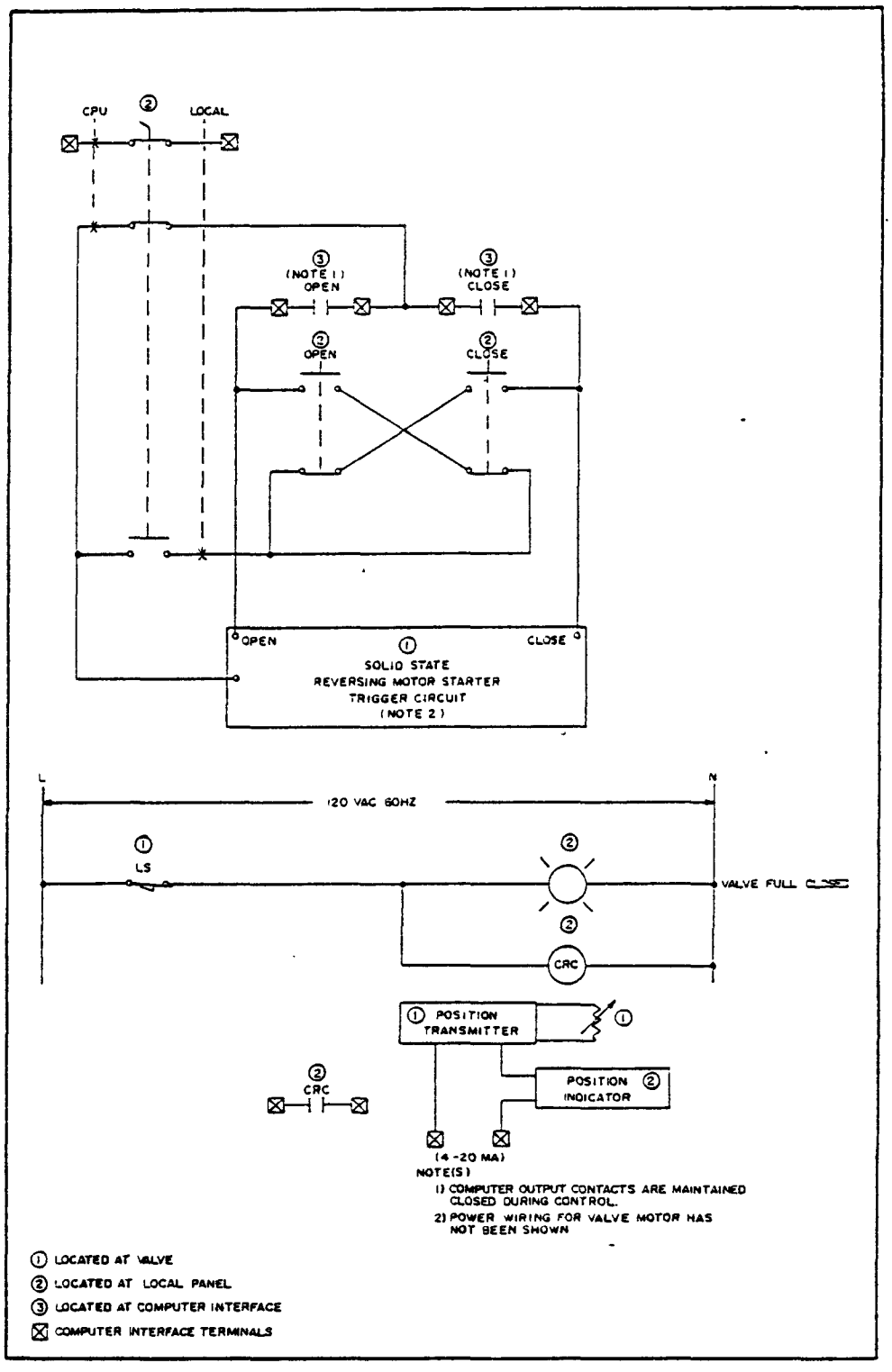

Figure 11.1. Electric operator control circuit-modulating service.

4. Power supply:

   a. 115 VAC, two phase, 60 Hz,

   b. 208 VAC, three phase, 60 Hz,

   c. 240 VAC, three phase, 60 Hz,

   d. 480 VAC, three phase, 60Hz, or

   e. 48 VDC.

5. Mechanical brakes to lock a valve in position..

6. A solid state position controller with an analog (usually 4-20 mA) remote setpoint.

7. Housing heaters to prevent condensation, reduce relative humidity, and keep lubricants at proper viscosity.

8. Motor rated for continuous modulating duty.

E. Installation

1. Size operator for the corresponding valve and service conditions. Operators are rated by torque which is determined for each application. Reference the sections on control valves.

2. The operator torque rating must exceed the highest expected valve torque, and the motor must not overheat in the maximum stroke time under the average expected torque. Furthermore, the motor must perform adequately at $\pm 10\%$ of rated voltage. Most operator manufacturers have tables that build in safety factors for the various types of valves. These tables let you select operator size directly from valve size or from valve torque data.

3. Frequently, placement of the valve in piping galleries or new process equipment restricts the operator dimensions and weight. Most often, the smallest and lightest operator with sufficient torque is selected for the application.

F. Designer Checklist

Ask the following questions when reviewing or planning an electric valve operator installation. If an answer is "no," an electric operator may not be appropriate.

1. Is there a reason pneumatic operators are not suitable for the application?

2. Is the highest valve torque in the range of 200 - 5500 J (150 - 4000 in-lbs)?

3. Is a positioner required? Note: Many manual loading stations provide similar functions with contact closure or triac interfaces, so the positioner is not required.

4. Is adequate power available?

5. Are limit switches or position feedback specified for remote monitoring?

6. Is the gear train between the actuator motor and valve stem adequate?

7. Is the fail-safe condition to hold the last position? If not, backup power such as batteries is required. Some spring return electric operators are available, but review the application to check on merits of electric operators versus other types of operators. Also consider plumbing changes in the valve's location so a maintained position is a fail-safe position.

G. Deficiencies

1. Modulating service operators overheat due to too small operator size.

2. Modulating service operators fail frequently.

11.2 HYDRAULIC

A. Application

Characteristics of a hydraulically actuated valve operator are:

1. High-pressure hydraulic fluid is generally supplied from a common pumping unit.

2. Actuator control is accomplished through a valve positioner or a system of hydraulic pilot valves.

3. Excellent throttling control features due to high stiffness (e.g., resistance to changing valve body forces).

4. Capable of high-torque outputs.

5. High initial cost.

6. Normal fail-position action of hold, fail open or fail close.

B. Principle of Operation

Hydraulically actuated valves use a piston operator to open or close the valve. Separate solenoid pilot valves direct hydraulic fluid to one side of the piston to operate the valve. Adjustable limit switches on the valve actuator close the pilot valve when the valve reaches its desired position. Hydraulic pressure in the cylinder is maintained or vented mechanically to hold the desired valve position. SEE FIGURE 11.2.

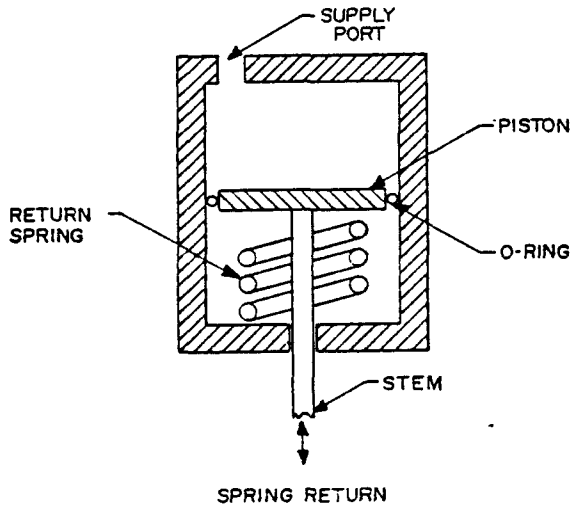

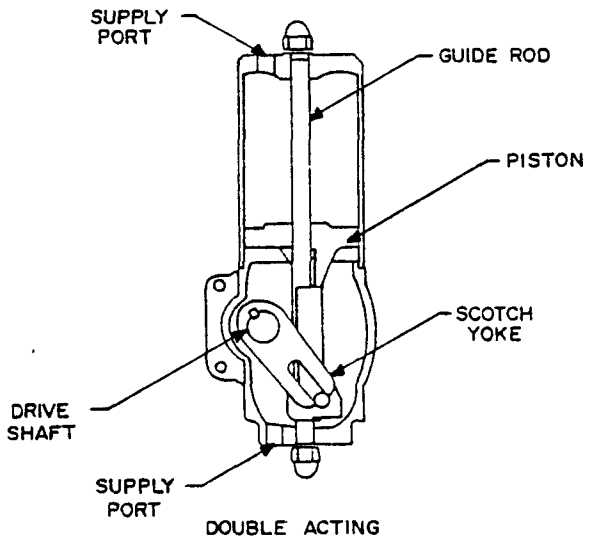

Figure 11.2. Hydraulic piston actuator.

Hydraulically actuated modulating valves are typically butterfly, ball, and plug type valves. Solenoid control valves direct regulated hydraulic fluid to either side of piston operator or a valve positioner to position the valve. When a contact closure is initiated, the appropriate solenoid valve port will open, and the cylinder will move the valve operator until the limit contact is opened or the desired position is reached.

Adjustable limit switches detect the fully open or closed position of the valve. A valve position potentiometer provides a resistance output signal proportional to the valve position for remote monitoring.

C. Valve Operation

Operation is normally from a local or remote panel external of the valve.

Controllability is good, and accurate position control can be obtained.

For interfacing, see Figure 11.3 for example of valve actuators that use solenoid control valves. Contact closure signals would be connected directly to the solenoid valves located on or near the modulated valve.

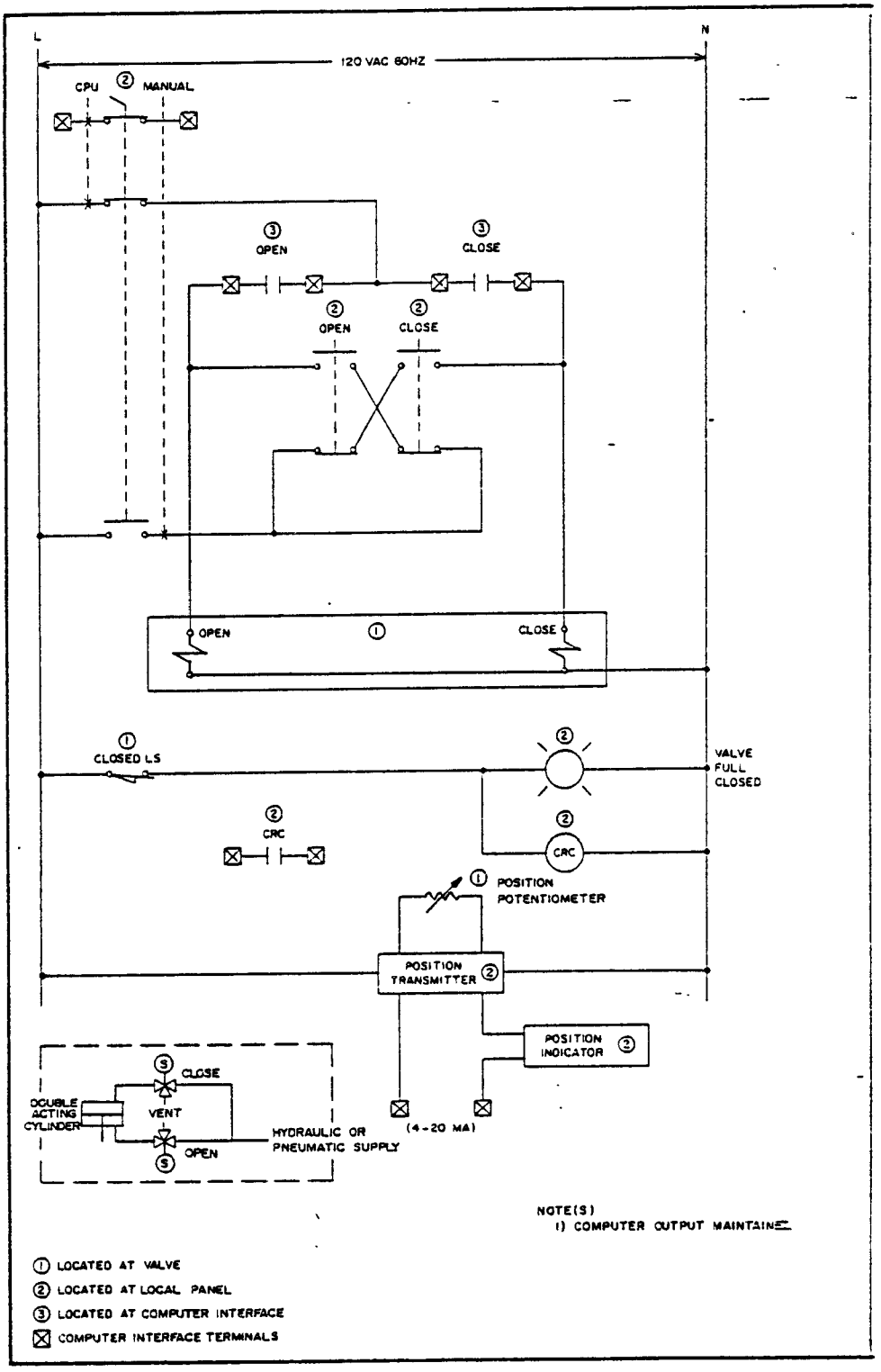

Figure 11.3. Piston actuator control circuit - incremental modulating service.

11.3 PNEUMATIC

A. Application

Pneumatic valve operators are available in two types. First is the piston actuator, shown in Figure 11.5, which is the same as the hydraulic actuator (Figure 11.5). Second is a diaphragm actuator as shown in Figure 11.6.

Characteristics of a pneumatic control valve operator are:

1. Pneumatic piston.

    a. Used open/close or modulating duty.

    b. Used when thrust or torque requirements exceed the capability of spring-and-diaphragm actuators.

    c. Fast acting.

    d. Fail-safe position action is hold-last-state, fail open or fail close.

2. Spring-and-diaphragm actuators.

    a. Used for modulating duty.

    b. Offers high reliability at low cost. Easy to maintain.

    c. Fast acting.

    d. Available for either fail-open or fail-closed action.

    e. Normally use air signal ranges of 3-15 psig.

    f. Have limited thrust capability. Normally limited to valves 8 inches and smaller.

    g. Actuators can be selected to cause valves to fail open or fail close.

B. Principle of Operation

Pneumatically actuated valves use a pneumatic positioner to open or close the valve. Typically separate solenoid control valves regulate the flow of compressed air to position the valve. Air pressure to the actuator cylinder is maintained or vented mechanically to maintain desired valve position.

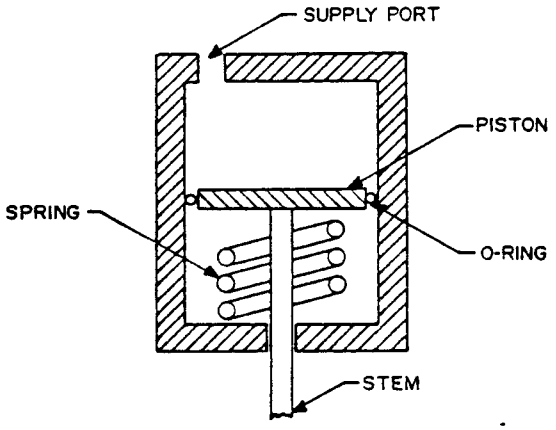

SPRING RETURN

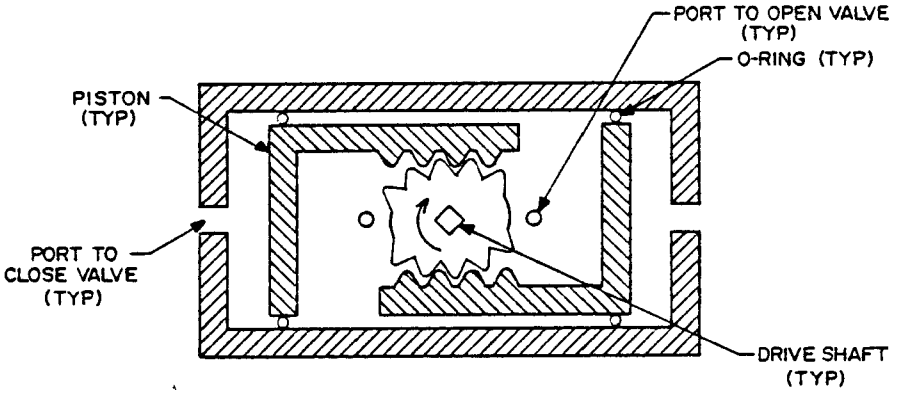

DOUBLE ACTING, RACH & PINION

Figure 11.4. Piston actuators.

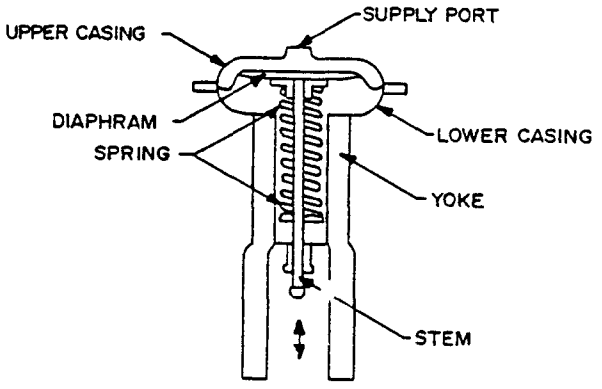

LINEAR ACTUATOR

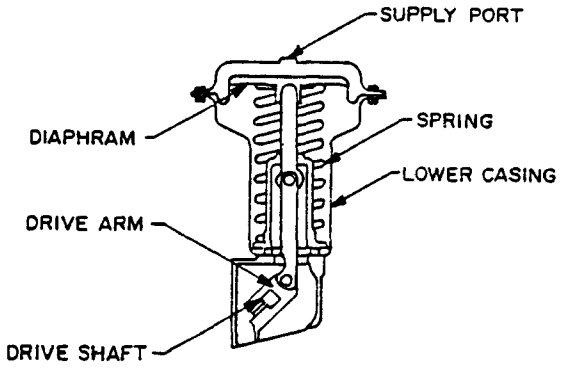

ROTARY OR QUARTER-TURN ACTUATOR

Figure 11.5. Diaphragm actuator.

Adjustable limit switches detect the fully open or closed valve position. A valve position transmitter with appropriate signal conditioning provides a 4 to 20 ma output signal, proportional to the valve position, for control purposes.

Pneumatically actuated modulating valves are typically mechanically operated butterfly, ball, and plug type valves or bladder type pinch valves. Separate solenoid control valves direct regulated compressed air to the valve positioner to position the valve. When a contact closure is initiated, the appropriate solenoid valve opens and the cylinder moves the valve operator until the contact is opened.

C. Valve Operation

Remote position control from an external source is available.

Controllability is good, and accurate position control can be obtained.

APPENDIX A

TITLE BY SUBJECT

REFERENCE LIST

Activated Sludge Wastewater Treatment Plants, Design Handbook for Automation of. Manning, A.W., Dobs, D.M. EPA-600/8-80-028 1980.

Reference Order #20, Appendix B

Analog & Digital Control, Combined. Murray, J.J. Chemical Engineering, June 1976.

Reference Order #6, Appendix B

Automatic Control--Reprint from Chemical Engineering. Soule, L.M. Foxboro Company, 1970.

Reference Order #13, Appendix B

Automatic Process Control. Johnson, E.F. McGraw-Hill, 1967.

Reference Order #18, Appendix B

Automatic Process Control, Principles of. Instrument Society of America. ISBN 87664-108-7, 1968.

Reference Order #17, Appendix B

Closed Loop Control System: Operation of a Direct-Digital On-Line Closed Loop Control System for Wastewater Treatment. Nelson, J.K., Mishra, B.B. Conference Presentation, Oct. 1978.

Reference Order #26, Appendix B

Control Theory Notebook. Wilson, H.S., Zoss, L.M. Reprinted from ISA Journal.

Reference Order #19, Appendix B

TITLE BY SUBJECT

Control Valves, Allocating Pressure Drops to. Moore, Ralph W. Instrumentation Technology, Oct. 1970, p. 102.

Reference Order #17, Appendix B

Control-Valve Gain, The Effect of Installed Flow Characteristic on. Boger, Henry W. ISA Transactions Vol. 8, No. 4, 1969, p. 265.

Reference Order #17, Appendix B

Control Valves and Pumps: Partners In Control. Coughlin, John L. Instruments and Control Systems, Jan. 1983, p. 41.

Reference Order #16, Appendix B

Control Valve: Choosing a Control Valve is Easy. Hammit, Donn. Instrument and Control Systems, Dec. 1976, p. 28.

Reference Order #16, Appendix B

Control Valve, Choosing the Right Control Valve for the Job. Rezac, Mark A., Bornhoft, Kevin F. In-Tecn, Oct. 1980, p. 59.

Reference Order #17, Appendix B

Control Valves In Process Plants. Kern, Robert. Chemical Engineering, April 1975, p. 85.

Reference Order #6, Appendix B

Control Valves, Introduction to. Driskell, Les. Instrument Society of America, 1981.

Reference Order #17, Appendix B

Control Valve Selection. Wolter, D.G. Instrumentation Technology, Oct. 1977, p. 55.

Reference Order #17, Appendix B

TITLE BY SUBJECT

Control Valves, Selection of. Driskell, Les. Instrument Society of America, 1982.

Reference Order #17, Appendix B

Control Valves, Sizing. Driskell, Les. Instrument Society of America, 1982.

Reference Order #17, Appendix B

Control Valves, Specifying. Chaflin, Sanford. Chemical Engineering, Oct. 1974, p. 105.

Reference Order #6, Appendix B

Digital Computer Process Control. Smith, C.L. In-Tech, 1972.

Reference Order #17, Appendix B

Dissolved Oxygen Field Test Protocol, Evaluation of. Kulin, G., Schuk, W.W. EPA 78-D-X0024-1, 1978.

Reference Order #25, Appendix B

DO Analyzers, Comparison of Field Testing on. APWA Research Foundation, Sept. 1982.

Reference Order #1, Appendix B

Effluent Specs: Tight Effluent Specs Met With Digital Control. Robbins, M.H. Water/Engineering & Management, Oct. 1983.

Reference Order #22, Appendix B

Electromagnetic Flow Meters In Wastewater Treatment Plants, Recommended Practice For The Use of. Kulin, G. EPA-600/2-84-187, November, 1984

Reference Order #20, Appendix B

TITLE BY SUBJECT

Energy Conservation for Existing Wastewater Treatment Plants.
Burris, Bruce E. Journal WPCF, Vol. 53, No. 5, May 1981, p. 5.

Reference Order #26, Appendix B

Flow: Its Measurement and Control in Science and Industry, Vol. 2.
Instrument Society of America, 1981.

Reference Order #17, Appendix B

Flow Measurement Handbook, Open Channel. Grant, D.M. ISCO, Inc.
2nd Edition, 1981.

Reference Order #15, Appendix B

Flow Measurement: Parshall Flume, Standard Method for Open Channel Flow Measurement of Industrial Water and Industrial Wastewater.
ASTM D1941-67.

Reference Order #4, Appendix B

Flow Measurement In Wastewater Treatment Plants With Venturi Tubes and Venturi Nozzles, Recommended Practice For.
Kulin, G. EPA-600/2-84-185, November, 1984.

Reference Order #20, Appendix B.

Flow Meter Engineering Handbook. Honeywell, Inc., 5th Edition, 1977.

Reference Order #14, Appendix B

Flow Meter Engineering, Principles and Practice of. Spink, L.K.
Foxboro Co., 9th Edition, 1967.

Reference Order #13, Appendix B

Flow Meters In Wastewater Treatment Plants, Recommended Practice For The Use of Electromagnetic.
Kulin, G. EPA-600/2-84-187, November, 1984.

Reference Order #20, Appendix B

TITLE BY SUBJECT

Flow Monitor Device, Choosing. Hall, J. Instruments and Control Systems, June 1978.

Reference Order #16, Appendix B

Flowmeter Accuracy, Piping Arrangements for Acceptable. Sprenkle, R.E. ASME Transactions 67:345, 1945.

Reference Order #10, Appendix B

Flowmeters to Water Management Systems, Application of. Brown, A.E. Instrument Society of America, Oct. 1981.

Reference Order #17, Appendix B

Flowmeters, Ultrasonic: Basic Design, Operation and Criteria Application. Powell, D.J. Plant Engineering, May 1979.

Reference Order #21, Appendix B

Fluid Meters, Their Theory and Application. ASME Report on Fluid Meters. 6th Edition, 1971.

Reference Order #3, Appendix B

Flumes In Wastewater Treatment Plants, Recommended Practice For The Use of Parshall Flumes and Palmer-Blowlus. Kulin, G. EPA-600/2-84-186, November, 1984.

Reference Order #20, Appendix B

Industrial Pressure Measurement. Gullum, R. Instrument Society of America Publications, 1982.

Reference Order #17, Appendix B

Industrial Process Control. Lloyd, S.G., Anderson, G.D. Fisher Controls, 1971.

Reference Order #12, Appendix B

TITLE BY SUBJECT

Instrument Engineers Handbook, Process Measurement. Liptak, B.G., Venczel, K. Chilton Book Co., 1969, Revised 1982.

Reference Order #7, Appendix B

Instrumentation In Wastewater Treatment Plants. Manual of Practice No. 21. Water Pollution Control Federation, 1978.

Reference Order #26, Appendix B

Liquid Flow Instruments, Meter Runs. Foxboro Technical Bulletin 8-110, Feb. 1943.

Reference Order #13, Appendix B

Liquid Flow Measurement. Foxboro Technical Bulletin 8-251, Aug. 1965.

Reference Order #13, Appendix B

Magnetic Flow Meter. Fischer & Porter Instruction No. 10D1435 A. Revision 1, 1969.

Reference Order #11, Appendix B

Magnetic Flow Meter--Application. Sybron/Taylor Corp. Product Data, PDS-15E002, Issue 3.

Reference Order #23, Appendix B

Magnetic Flow Meter--Basic Theory. Sybron/Taylor Corp. Product Data, PDS-15E001, Issue 3.

Reference Order #23, Appendix B

Magnetic Flow Meter--Installation. Sybron/Taylor Corp. Product Data, PDS-15E003, Issue 2.

Reference Order #23, Appendix B

TITLE BY SUBJECT

Minicomputers In Industrial Control. Harrison, T.V. Instrument Society of America, 1978.

Reference Order #17, Appendix B

Orifice and Venturi Meters, Survey of Information Concerning the Effects of Nonstandard Approach Conditions. Starret, P.S., Halfpenny, P.F., Noltage, H.B. ASME 1965.

Reference Order #10, Appendix B

Orifice Plates for Flow Measurement, Flange Mounted Sharp Edged. Instrument Society of America, RP 3.2-1978.

Reference Order #17, Appendix B

Parshall Flumes and Palmer-Bowlus Flumes In Wastewater Treatment Plants, Recommended Practice For The Use Of.
Kulin, G. EPA-600/2-84-186, November, 1984.

Reference Order #20, Appendix B

Process Control: Basic Concepts, Terminology and Techniques for.
Gordon, Lewis M. Reprinted from Chemical Engineering, May 1983, p. 58.

Reference Order #13, Appendix B

Process Control Computer Systems Guide for Managers. Stire, T.G.
ISBN 250-40488-5.

Reference Order #5, 9, Appendix B

Process Control Systems. Shinsky, F.M. McGraw-Hill, 2nd Edition, 1979.

Reference Order #18, Appendix B

Process Instrumentation Manifolds. Henson, J.E. Instrument Society of America, 1978.

Reference Order #17, Appendix B

TITLE BY SUBJECT

Process Instruments and Control Handbook. Considine, D.M. McGraw-Hill, 2nd Edition, 1974.

Reference Order #18, Appendix B

Refinery Instruments and Control Systems: Manual on Installation of. Part I--Process Instrumentation and Control, Section 1--Flow. API RP550, 3rd Edition, 1977.

Reference Order #2, Appendix B

Refinery Instruments and Control Systems: Manual on Installation of. Part I--Process Instrumentation and Control, Section 2--Level. API 1974.

Reference Order #2, Appendix B

Refinery Instruments and Control Systems: Manual on Installation of. Part I, Section 6--Control Valves and Accessories. API, 3rd Edition, 1976.

Reference Order #2, Appendix B

Refinery Instruments and Control Systems: Manual on Installation of. Part II--Process Stream Analyzers. API RP550, 3rd Edition, 1977.

Reference Order #2, Appendix B

Three Mode Controllers, Fundamentals of. Jury, F.D. Technical Monograph 28, Fisher Controls, 1973.

Reference Order #12, Appendix B

Tuning Controllers for Noisy Processes. Fertik, H.A. ISA Transactions, Vol. 14, No. 4, 292-304, 1975.

Reference Order #17, Appendix B

Ultrasonic Flowmeters: Basic Design, Operation and Criteria Application. Powell, D.J. Plant Engineering, May 1979.

Reference Order #21, Appendix B

TITLE BY SUBJECT

Valve: Advances In Water and Wastewater Valves. Consulting Engineer, Sept. 1982, p. 105.

Reference Order #8, Appendix B

Valve Rangeability, Plain Talk on. Wing, Paul. Instrumentation Technology, April 1978, p. 53.

Reference Order #17, Appendix B

Valves With Process Requirements, Matching. Ramsey, John.R., Fournier, Charles D. Instrument and Control Systems, June 1973, p. 65.

Reference #16, Appendix B

Venturi Meter Tube, Standard Methods of Flow Measurement of Water. ASTM D2458-69.

Reference Order #4, Appendix B

Venturi Tubes and Venturi Nozzles, Recommended Practice For Flow Measurement In Wastewater Treatment Plants With. Kulin, G. EPA-600/2-84-185. November, 1984.

Reference Order #20, Appendix B

Water Measurement Manual. U.S. Department of the Interior, Bureau of Reclamation, 2nd Edition, 1981.

Reference Order #24, Appendix B

APPENDIX B

REFERENCE LIST SOURCES

Reference #	Available From:
1	American Public Works Association 1313 East 60th Street Chicago, IL 60637 (312) 667-2200
2	American Petroleum Institute Publication and Distribution Section 2101 L Street NW Washington, DC 20037 (202) 457-7160
3	American Society of Mechanical Engineers Order Department United Engineering Center P.O. Box 3199 New York, NY 10163
4	American Society for Testing and Materials 1916 Race Street Philadelphia, PA 19103 (215) 299-5400
5	Butterworth Publishers c/o EMA, Inc. Hanover Building 480 Cedar Street St. Paul, MN 55101 (612) 298-1992
6	Chemical Engineering, 43 FL 1221 Avenue of the Americas New York, NY 10020

Reference #	Available From:
7	Chilton Book Company Chilton Way Radnor, PA 19089 (215) 964-4729
8	Consulting Engineer 1301 S. Grove Avenue P.O. Box 1030 Barrington, IL 60010 (312) 381-1840
9	EMA, Inc. Hanover Building 480 Cedar Street St. Paul, MN 55101 (612) 298-1992
10	Engineering Societies Library 345th East 47th Street New York, NY 10017 (212) 705-7606
11	Fischer & Porter 25 Jacksonville Road Warminster, PA 18974
12	Fisher Controls Company 205 South Center Street Marshalltown, IA 50158
13	Foxboro Company Literature Stock Department 544 P.O. Box 568 Foxboro, MA 02035 (617) 543-8750

Reference #	Available From:
14	Honeywell, Inc. Publications Fort Washington, PA 19034 (215) 641-3000
15	ISCO, Inc. P.O. Box 82531 Lincoln, NE 68528 1-800-228-4373 (402) 464-0231
16	Instrument & Control Systems (Chilton's I&CS) Chilton Co. Radnor, PA 19089 (215) 964-4496
17	Instrument Society of America 67 Alexander Drive P.O. Box 12277 Research Triangle Park, NC 27709 (919) 549-8411
18	McGraw-Hill Publications Co. 1221 Avenue of the Americas New York, NY 10020 (212) 997-1221
19	Moore Products Co. Sumney Town Pike Springhouse, PA 19477 (215) 646-7400
20	National Technical Information Service 5285 Port Royal Rd. Springfield, VA 22161 (703) 487-4650

Reference #	Available From:
21	Plant Engineering 1301 S. Grove Avenue P.O. Box 1030 Barrington, IL 60010 (312) 381-1840
22	Water, Engineering & Management Scranton Gillette Communications, Inc. 380 Northwest Highway Des Plaines, IL 60016
23	Sybron/Taylor Corp. 100 Midtown Tower Rochester, NY 14604 (716) 546-4040
24	Superintendent of Documents U.S. Government Printing Office Washington, DC 20402
25	United States Environmental Protection Agency 26 West St. Clair Street Cincinnati, OH 45268 (513) 684-2621
26	WPCF 2626 Pennsylvania Avenue NW Washington, DC 20037 (202) 337-2500

GLOSSARY

access time: 1. The time it takes a computer to locate data or an instruction word in its storage section and transfer it to its arithmetic unit where the required computations are performed. 2. The time it takes to transfer information which has been operated on from the arithmetic unit to the location in storage where the information is stored.

accuracy: The maximum error in the measurement of a physical quantity in terms of the output of an instrument when referred to the individual instrument calibration. Usually given as a percentage of full scale.

actuator: A mechanism for translating an electronic or pneumatic signal into a corresponding movement or control. Example: an actuator moves a valve based on a control signal. See also final control element.

address: A numerical expression which designates a specific location in stored memory (software), or a specific card and pin number (hardware).

alarms: Devices which signal the existence of abnormal conditions. See also annunciator.

algorithm: A prescribed set of rules or procedures for the solution of a problem in a finite number of steps.

alphanumeric: Pertaining to a character set that contains both letters and numerals and other characters such as punctuation marks.

amplifier: A device that enables an input signal to control power from a source independent of the input signal and thus be capable of delivering an output that bears a relationship to, but is generally greater than, the input signal.

analog: Pertaining to representation of numerical quantities by means of continuously variable physical characteristics. Contrast with digital.

analog control: Implementation of automatic control loops with analog (pneumatic or electronic) equipment.

analog device: A mechanism which represents numbers by physical quantities, i.e., by lengths, as in a slide rule, or by voltage or currents as in a differential analyzer or a computer of the analog type.

analog signal: A continuously varying representation of a physical quantity, property, or condition such as pressure, flow, or temperature. The signal may be transmitted as pneumatic, mechanical, or electrical energy.

analog-to-digital converter (ADC): A device used to convert an analog signal to approximate corresponding digital data.

annunciator: A visual or audible signaling device and the associated circuits used for indication of alarm conditions.

application software: Programs which are unique to a specific process control system installation or other specific installations, rather than general purpose and of broad applicability.

assembler: A software program that translates symbolic language into machine language by the substitution of operation codes for symbolic operation codes and absolute or relocatable addresses for symbolic addresses.

asynchronous transmission: Transmission in which each information character, word, or block of data is individually synchronized, usually by the use of start and stop elements. Time between transmission of characters can vary.

automatic: Pertaining to a process or device that under specified conditions, functions without intervention by a human operator.

background processing: A processing method whereby some computer programs with a low priority are executed only when the computer is not busy with execution of higher priority programs.

backup: Provisions for an alternate means of operation in case of unavailability of the primary means of operation.

batch processing: 1. Pertaining to the technique of executing a set of programs, such that each is completed before the next program of the set is started. 2. Loosely, the execution of programs serially.

baud rate: A unit of signaling speed indicating the number of signal changes per second. Most signal schemes have two states representing a bit equal to 1 or 0. In this case bit rate equals baud rate. Some signaling schemes have multiple states. In these, baud rate is less than bit rate.

binary coded decimal (BCD): Describing a decimal notation in which individual decimal digits are represented by a group of binary bits, e.g., in the 8-4-2-1 coded decimal notation each decimal digit is represented by a group of four binary bits. The number twelve is represented as 0001 0010 for 1 and 2, respectively, whereas in binary notation it is represented as 1100.

binary number: A number usually consisting of more than one figure, representing a sum, in which the individual quantity represented by each figure is based on a radix of two. The figures used are 0 and 1.

bit: 1. An abbreviation of binary digit. 2. A single character in a binary number. 3. A single pulse in a group of pulses. 4. A unit of information capacity of a storage device. The capacity in bits is the logarithm to the base two of the number of possible states of the device. Related to storage capacity. 5. One binary digit, the smallest piece of information in a computer system. A bit can be either 1 or 0.

bit rate: Rate at which binary digits are transmitted over a communications link. (See baud rate.)

block transfer: The process of transmitting one or more groups of data.

boiler plate: Common expression referring to standard written requirements or regulations, usually inserted in the front of a contract or specification.

Boolean: An algebraic system formulated by George Boole for formal operations on true/false logic.

buffer: 1. An internal unit of a computing device which serves as intermediate storage between two storage or data handling operations with different access times or formats; usually to connect an input or output device with the main or internal high-speed storage. 2. An isolating component designed to eliminate the reaction of a driven circuit on the circuits driving it, e.g., a buffer amplifier.

bumpless transfer: A characteristic of a controller which permits control mode changes (such as automatic or manual selection) to be made without producing a discontinuity in the controller output.

byte: 1. A generic term to indicate a measurable portion of a string of two or more binary digits, e.g., an 8-bit byte. 2. A group of binary digits usually operated upon as a unit.

cascade control: The use of two conventional feedback controllers in series such that two loops are formed, one within the other. The output of the controller in the outer loop modifies the setpoint of the controller in the inner loop.

cathode ray tube (CRT): 1. An electronic vacuum tube containing a screen on which information may be stored for visible display by means of a multigrid modulated beam of electrons from the thermionic emitter. 2. Loosely, a computer terminal using a cathode ray tube as a display device.

central processing unit (CPU): A unit of a computer that includes circuits controlling the interpretation and execution of instructions.

character: One alphanumeric symbol, e.g., letter, figure, number, punctuation or other sign. Characters are usually represented by a code of binary digits, e.g., ASCII.

closed-loop: A signal path which includes a forward path, a feedback path, and a summing point, and forms a closed circuit.

common mode rejection (CMR): The ability of a circuit to discriminate against a common mode voltage. CMR may be expressed as a dimensionless ratio, a scalor ratio, or in decibels.

common mode voltage: A voltage relative to ground of the same polarity on both sides of a differential input.

compiler: A program that translates a problem-oriented language to a machine oriented language, such as FORTRAN, and substitutes subroutines and single machine instructions for symbolic inputs.

computer: 1. A data processor that can perform substantial computation, including numerous arithmetic or logic operations, without intervention by a human operator during the run. 2. A device capable of solving problems by accepting data, performing described operations on the data, and supplying the results of these operations. Various types of computers are calculators, digital computers and programmable controllers.

control: 1. In process control, this refers to actions taken to achieve a desired result in the process. 2. In some applications, a mathematic check. 3. In computer programs, instructions which determine conditional jumps are often referred to as control instructions, and the time sequence of execution of instructions is called the flow of control.

control loop: Several control devices connected in series to perform a specific control function.

control mode: A specific type of control action such as proportional, integral or derivative.

control sequence: See sequence control program.

control strategy: A sequence of instructions (program) executed by a computer to achieve a desired control objective.

control system: 1. A system in which deliberate guidance or manipulation is used to achieve a prescribed value of a variable. 2. Refers to a system of hardware and software components including computers, disks, printers, instruments, control panels, operator facilities, communications channels, systems programs, development programs, and applications programs.

controller: A device which operates automatically to regulate a controlled variable by comparing a measurement of the variable with a reference value representing the desired level of operation.

cursor: A marker which moves over a surface to delineate position. A dot on a CRT screen, for example.

DAS: Data acquisition system.

DEAC: Digitally emulated analog control.

data base: A collection of stored data in memory that is application specific for use by the control software - for example, remote station files that contain input/output point description data for each remote station.

data highway: Refers to a coax cable data link connecting remote processors, operator facilities and the central computer to provide information exchange.

deadband: 1. A specific range of values within which the incoming signal can be altered without also changing the outgoing response. 2. The range of values of a process variable where no control action is taken. If the process variable exceeds the deadband high or low limits, control action is started.

deadman control: Continuous manual action (e.g., depressing a pushbutton) is required to modulate device position or speed. Device maintains status quo when control action is absent.

dead time: The interval of time between initiation of an input change or stimulus and the start of the resulting observable response.

derivative action: A controller mode which contributes an output proportional to the rate of change of the error.

development software: Software which provides a means for creation of application software, such as a data base generator.

diagnostic: A computer routine designed to test a hardware or software function and identify malfunction or error.

digital: Pertaining to representation of numerical quantities by discrete levels or digits conforming to a prescribed scale of notation.

direct acting controller: A controller in which the value of the output signal increases as the value of the input (measured variable) increases.

direct digital control (DDC): 1. A control technique in which a digital computer is the controller and its output is connected directly to the final control element. Used to distinguish from analog control. 2. Implementation of analog PID control using computer software rather than conventional analog controllers (DEAC).

disk (or disc): A memory storage device using one or more rotating plastic discs coated with a magnetic material for recording information.

distributed control: Location of controlling equipment (either computer or conventional controllers) at remote locations throughout the process.

disturbance: A change in the operating condition of a process, most commonly a change in input or output loading.

download: a process by which a CPU in a computer control system network transfers a program (task) image to another CPU in the network and causes it to be executed.

duplex: See full duplex.

dynamic data: Data whose value depends on conditions or parameters that change with time. Contrast with fixed or static data.

engineering unit (EGU): Units of measure of process variables.

error: The difference between the setpoint reference value and the value of the measured signal.

expendables: Items expected to be consumed such as print paper, lubrication fluids, and air filters. Distinguished from spare parts used for replacement of failed components such as printed circuit boards, power supplies, and fuses.

failure: Loss of ability to perform a specified function.

feedback: The signal in a closed-loop system representing the condition of the controlled variable.

feedback control: Control in which a measure variable is compared to its desired value to produce an actuating error signal which acts upon the process to reduce the magnitude of the error.

feedforward control: Control in which information concerning one or more conditions that can disturb the controlled variable is converted, outside of any feedback loop, into corrective action to minimize deviations of the controlled variable.

final control element: The device used to directly change the value of the manipulated variable.

firmware: A series of computer instructions (programs) permanently stored in ROM (read only memory).

floppy disk: A small flexible inexpensive magnetic disk commonly used for data storage in small computer systems.

flowchart: 1. A system analysis tool that provides a graphical presentation of a procedure. Includes block diagrams, routine sequence diagrams, and data flow symbols. 2. A chart to represent for a problem, the flow of data, procedures, growth, equipment, methods, documents, and machine instructions. 3. A graphical representation of a sequence of operations by using symbols to represent the operations such as compute, substitute, compare, jump, copy, read, and write.

foreground processing: A high-priority processing method where real-time control programs and process inputs are given preference (through the use of priority interrupts) over other programs being executed by the computer system. See background processing.

full duplex: A communications channel with separate circuits for transmission and reception, so that both can occur simultaneously. Also referred to as duplex communications.

graphic: Pertaining to representational or pictorial material, usually legible to humans and applied to the printed or written form of data such as curves, alphabetic characters, and radar scope displays.

half duplex: A communications channel where transmission and reception share the same circuit so that both cannot occur simultaneously.

hand/off/automatic (HOA): Refers to a 3-position selector switch on a control panel. In AUTOMATIC a computer or logic in the panel control the associated device. In HAND, the device is turned on from the local panel. In OFF, the device state is turned off from the local panel.

hard coded: A programming practice whereby application-related information, such as point names, and ranges, are not represented symbolically within a program such that recompilation is necessary in order to change the information.

Hertz: Abbreviated Hz. A unit of frequency equal to one cycle per second.

hierarchy: Refers to levels of supervision and control responsibility within a centralized control system.

hierarchical network: A computer network in which processing and control functions are performed at different levels by several computers especially suited to the functions performed.

incremental control: Use of short pulses to increase or decrease the value of the controlled variable. Contrast with positional control.

input/output list: A list that describes remote station and satellite input and output signal points containing information such as point label, type, address, and limits.

instruction set: A listing of the instructions or operations a particular computer can execute.

instrumentation: The application of devices for the measuring, recording, or controlling of physical properties and movements.

interlock: A mechanical or electrical device or wiring which is arranged in such a manner as to allow or prevent operation of equipment only in a pre-arranged sequence.

integral action: A controller mode which contributes an output proportional to the integral of the error.

integral time: The time required after a step input is applied for the output of a proportional plus integral mode controller to change by an amount equal to the output due to proportional action alone.

isolation: a physical and electrical arrangement of the parts of a receiving instrument to prevent interference currents within or between input and output of the instrument.

lead-lag compensation: An electronic network or software used to influcence the response of a control loop.

line conditioning: The addition of equipment to a leased voice-grade channel to provide minimum line characteristics necessary for data transmission.

linearity: Ability to achieve a straight-line response to an input signal.

load shedding: starting and stopping of equipment to reduce electrical power demand.

local control: Control operations performed either manually or automatically at a control panel located near the process or equipment.

logging: Recording values of process variables for later use in trending, report compilation, or historical records.

loop: See control loop.

loop gain: The ratio of the change in the return signal to the change in its corresponding error signal at a specified frequency. Note: the gain of the loop elements is frequently measured by opening the loop, with appropriate termination. The gain so measured is often called the open loop gain.

machine language: Coding in the numeric language form acceptable to the computer arithmetic and control unit.

main frame: 1. The central processor of the computer system. It contains the main storage, arithmetic unit and special register groups. Synonymous with CPU and central processing unit. 2. All that portion of a computer exclusive of the input, output, peripheral and in some instances, storage units.

manipulated variable: The process variable that is changed by the controller to reduce or eliminate error.

manual control: Control operations are performed directly by a human operator and not by computer control algorithms. Two levels of manual control are possible; 1. local manual - the process is controlled manually from the local panel; 2. computer manual - the process is controlled manually through computer system interactive CRT displays.

manual loading station: A manual electronic controller. Used here to refer to a controller whose output is adjusted manually by an operator from the front of a panel.

menu: A CRT screen which lists operator options available related to a given area. For example, a graphic menu lists all graphic displays which may be chosen.

modem: A contraction of modulator/demodulator. This is a device that converts digital data into a form suitable for transmission over the communications media. For example, phone line modems convert digital data to audio signals.

monitoring: The information on the conditions of various water control processes, operations, levels, and security obtained by electronic devices.

multi-drop network: A type of communications system where lines are terminated (dropped) at intermediate points between the end terminals of the system.

multiplexer (MUX): A device which samples input and/or output channels and interleaves signals in frequency or time.

multiplexing: The process of combining several measurements for transmission over a pair of wires or link.

multi-processing: Pertaining to the apparent simultaneous execution of two or more programs or sequences of instructions by a computer or computer network.

multi-programming: Pertaining to the apparent simultaneous execution of two or more programs by a single computer.

multi-tasking: The facility that allows the programmer to make use of the multi-programming capability of a system.

normal mode voltage: A voltage induced across the input terminals of a device.

ODC: Optimizing digital control.

offset: The steady-state deviation of the controlled variable from the setpoint caused by a change in load.

on-line: Pertaining to a computer that is actively monitoring or controlling a process or operation, or pertaining to a capability of the user to interact with a computer.

on/off control: A system of regulation in which the manipulated variable has only two possible values, on and off.

open-loop: A signal path without feedback.

operating limits: High and low limits set for a process variable. A value of process variable between these limits is considered normal and no control action is taken. When either of the limits are exceeded an alarm or control action is initiated.

operating system: Software that controls the carrying out of computer operations such as scheduling, compilation, storage assignment, and data management.

operator interface (operator process interface): The means through which an operator accesses the computer system to affect process control actions. Usually this consists of a CRT and keyboard arrangement along with appropriate display software.

optimization: A process whose object is to make one or more variables assume, in the best possible manner, the value best suited to the operation at hand, dependent on the values of certain other variables which may be either predetermined or sensed during the operation.

package system: Equipment which is supplied as a system including controls.

parallel transmission: A mode of transmission whereby each bit of a data word is transmitted simultaneously over separate communications circuits.

parameters: The limits or context within which the problem is considered.

parity: One method of error checking in data communications. As a bit string is transmitted, an extra bit is added to make the total number of bits either odd or even (called odd or even parity). The receiving machine checks each bit string for correct parity.

peripheral: A machine that enables a computer to communicate with the outside world or aids the operation of the computer.

permissive: A signal which permits the placing of equipment into operation.

piping and instrumentation drawing (P&ID): A schematic drawing of the process showing all liquid flow paths, location of all sensors and instruments, and location of backup conventional control equipment.

point: A single signal to or from a field device. Points are either analog in, contact (digital) in, modulating (analog) out, or contact (digital) out.

polling: Periodic interrogation of each of the terminals that share a communications channel to determine whether it needs to use the channel to transmit. An alternate to a contention system of communication channel control.

positional control: Use of a maintained signal output value to modulate device position or speed. Contrasts with <u>incremental</u> control.

power management: Making most efficient use of operational periods for equipment and using the lower cost rate non-peak electrical energy periods to the greatest extent possible. See <u>load shedding</u>.

precision: The quality of being exactly defined. This is sometimes represented by the number of significant bits in the digital representation. Also related to repeatability instruments.

primary element: The device which converts a portion of the energy of the variable to be measured to a form suitable for amplification and retransmission by other devices.

priority: Level of importance of a program or device.

priority interrupt: The temporary suspension of a program currently being executed in order to execute a program of higher priority. Priority interrupt functions usually include distinguishing the highest priority interrupt active, remembering lower priority interrupts which are active, selectively enabling or disabling priority interrupts, executing a jump instruction to a specific memory location, and storing the program counter register in a specific location.

process: 1. The collective functions performed in and by industrial equipment, exclusive of computer and/or analog control and monitoring equipment. 2. A general term covering such items as assemble, compile, generate, interpret and compute.

process control: Descriptive of systems in which controls are used for automatic regulation of operations or processes.

process I/O: Input and output operations directly associated with a process, as contrasted with I/O operations not associated with the process. For example, in a process control system, analog and digital inputs and outputs would be considered process I/O whereas inputs and outputs to bulk storage would not be process I/O.

process variable: 1. In a control loop, the variable being controlled to the setpoint. 2. Any parameter within the process that is of interest from an operations or control standpoint.

programmable controller: A control machine using solid-state digital logic. Used primarily for replacement of electromechanical relay panels.

Programmable Read Only Memory (PROM): A non-volatile (data won't be lost when power is turned off) memory that is used to store unchanging information such as programs. The computer system cannot write information to a PROM. PROM's are loaded at the factory and can only be changed using special equipment.

proportional action: A controller mode which contributes an output proportional to the error.

proportional band: The range of the controlled variable that corresponds to the full range of the final control element.

protocol: A set of rules governing communications between computers that insures messages are correctly sent, received, and understood.

R/C filter: An electronic filter network made up of passive components such as resistors and capacitors.

Random Access Memory (RAM): That portion of computer memory that can be both written to and read from.

range: The region between the limits within which a quantity is measured, received or transmitted, expressed by stating the lower and upper range values.

rate time: For a linearly changing input to a proportional plus derivative mode controller, the time interval by which derivative action advances the effect of proportional action.

ratio control: Control in which a secondary input to a process is regulated to maintain a preset ratio between the secondary input and an unregulated primary input.

real time: The performance of a computation during the actual time that the related physical process transpires in order that the results can be useful in guiding the process.

regulatory control: Maintaining the outputs of a process as closely as possible to their respective setpoint values despite the influence of setpoint changes and disturbances.

remote: Referring to an operations point located at some distance from the field device.

remote/local (R/L): Refers to a switch setting at local panel controls. The switch in local position means that control can be exercised at the local panel only, locking out control from a remote location. The switch in remote position means that control is exercised from a remote location and local controls are locked out.

repeatability: The ability of an instrument to produce the same output reading when a given condition is applied repeatedly.

repeats per minute: Controller integral mode adjustment units. The inverse of integral time.

reset windup: In a controller containing integral action, the saturation of the controller output at a high or low limit due to integration of a sustained deviation of the controlled variable from the setpoint.

reverse action controller: A controller in which the value of the output signal decreases as the value of the input (measured variable) increases.

screen refresh: A hardware function which maintains an image on a CRT screen by the continuous generation of a composite video signal from data stored in the memory of a CRT controller.

screen update: A software function which periodically replaces the dynamic data portion of a display with current real-time data.

select-before-operate: A supervisory control system in which a point is first selected and a return displayed proving the selection after which one of several operations can be performed on that point.

self-configuring: A method of programming which eliminates the need to reassemble or recompile programs after a change in configuration by the dynamic use of parameters external to the program which define the particular configuration.

sensor: See transducer.

sequence control program: A high-level program whose primary function is to cause a sequence of events to happen based on current process requirements or operator requests.

serial transmission: A mode of transmission whereby bits of a data word are sent sequentially (starting with either the most or least significant bit) over a single communications channel.

setpoint: In a control loop, refers to the desired value of the process variable being controlled.

signal: 1. The event or phenomenon that conveys data from one point to another. 2. A time dependent value attached to a physical phenomenon and conveying data.

simulation: The representation of certain features of the behavior of a physical or abstract system by the behavior of another system, for example, the representation of physical phenomena by means of operations performed by a computer or the representation of operations of a computer by those of another computer.

software: 1. A set of programs, procedures, rules and associated documentation concerned with the operation of a computer system, for example, compilers, library routines, and manuals. 2. A program package containing instructions for the computer hardware.

software development system: See development software.

software packages: Various computer programs or sets of problems used in a particular application.

software subsystems: Refers to major segments of the software which performs a unique, identifiable function. This includes such subsystems as operating system, logging, scanning, graphic displays, alarming, DDC and each separate control function.

source code: Code used as input to a translation program, such as an assembler or a compiler.

SCADA: Supervisory control and data acquisition.

span: The algebraic difference between the upper and lower range values.

steady-state: A characteristic of a condition, such as value, rate, periodicity, or amplitude, exhibiting only negligible change over an arbitrary long period of time. It may describe a condition in which some characteristics are static, others dynamic.

supervisory control: 1. A control technique in which a digital computer is used to determine and fix setpoints for conventional analog controllers. Used to distinguish from direct digital control. 2. A high-level program whose primary function is to oversee an on-going process and alter the general parameters of a control strategy based upon mathematical relationships.

synchronous transmission: 1. Transmission in which the sending and receiving instruments are operating continuously at substantially the same frequency and are maintained, by means of correction, in a desired phase relationship. 2. A mode of data transmission whereby the message is sent in a continuous bit string.

system regeneration: The complete reconfiguration of a computer's main memory and mass memory. This function will typically require taking the computer control subsystem off line.

system software: Software which includes the operating system, resources management functions, and processing functions for data acquisition and control.

table driven: A programming method whereby the paths of execution through a computer program are controlled by the contents of a data table containing logical or numeric data.

telecommunication: The use of leased telephone lines for sending informative data and performing operational controls at great distances.

telemetering: The transmission of a measurement over long distances, usually by electromagnetic means.

time constant: The time required for the output of a single capacity element to change 63.2 percent of the amount of total response when a step change is made in its input.

time slicing: A technique for allocating CPU time between multiple programs within a multi-programming environment. This technique allocates a given segment of time to each task in a round-robin fashion without regard to task priority or importance.

transducer: An element or device which receives information in the form of one physical quantity and converts it for transmission, usually in analog form. This is a general definition and applies to specific classes of devices such as primary element, signal transducer and transmitter.

transmitter: A transducer which responds to a measured variable by means of a sensing element, and converts it to a standardized transmission signal which is a function only of the measured variable.

uninterruptible power supply (UPS): A power supply having backup battery storage. A UPS is used to insure operation of critical computer equipment during power failures.

utility program: A program providing basic conveniences such as loading and saving programs, and initiating program execution.

watchdog timer: An electronic internal timer which will generate a priority interrupt unless periodically recycled by a computer. It is used to detect program stall or hardware failure conditions.

word: 1. A character string or a bit string considered as an entity. 2. A group of binary digits treated as one unit of information and stored in a single memory location.

REFERENCES

American National Standards Institute. American National Standard - Process Instrumentation Terminology. ANSI/ISA - S51.1. 1979.

American National Standards Institute. American National Directory for Information Processing. ANSI X3/TR-1-77.

American National Standards Institute. IEEE Standard Dictionary of Electrical and Electronic Terms ANSI/IEEE 100-1977.

Skrokov, M. R. ED. Mini - and Microcomputer Control in Industrial Processes. Van Nostrand Reinhold Co. New York. 1980.

Graf, Rudolf F., Modern Dictionary of Electronics. Howard W. Sams & Co., Inc., 1977.