United States
Environmental Protection
Agency

Environmental Monitoring
Systems Laboratory
Research Triangle Park NC 27711

EPA-600/4-83-027
June 1983

Research and Development

EPA

Technical Assistance Document for Sampling and Analysis of Toxic Organic Compounds in Ambient Air

SECTION 1

INTRODUCTION

This Technical Assistance Document (TAD) is intended to serve as a guide to those persons responsible for designing and implementing ambient air monitoring programs for toxic organic compounds. Presumably technical personnel within regional, state, and local environmental regulatory agencies will be the primary users of this document, although the scope is sufficiently broad that other persons may find it useful for the design of monitoring programs.

This document is not intended to serve as a single source of information from which all necessary technical input concerning toxic organic monitoring can be obtained. Rather, the TAD should be used as an overview document to be consulted during the initial phases of a monitoring program, with the user being directed to the referenced literature or other specific, detailed information as required. The structure of the TAD is such that the reader will normally recognize points at which such detailed information is required, and a substantial amount of this information can be obtained from the secondary sources referenced throughout the document.

Obviously this document does not eliminate the need for sound technical judgement on the part of those persons planning a given monitoring program (i.e., the TAD is not a "cookbook"). In general, persons planning such programs must have a strong chemistry background with specific knowledge and expertise in instrumental sampling and analysis techniques. If such persons are not available to a given program the probability of success will be extremely low and the information obtained inaccurate. Indeed, the process of ambient air monitoring for trace levels of organic compounds is highly sophisticated and fraught with difficulties which are frequently not recognized by nontechnical personnel.

On the other hand, most ambient air monitoring programs are devised in response to a public or regulatory need which is frequently nontechnical. Consequently, the technical personnel responsible for planning and implementing the details of the program must consult with the appropriate policy personnel to ensure that the technical objectives of the program are directed towards meeting that regulatory or public need. This technical/policy interface is extremely important and should be implemented in a very early stage of development of a monitoring program in order to ensure that the regulatory and/or public objectives can be technically achieved and data presented in a useful format.

The TAD is presented in four major sections, including this introductory section. The second section deals with regulatory policy and public issues which lead to the need for ambient air monitoring programs. Special emphasis is given to the examination of regulatory or public objectives as they relate to the technical design and implementation of monitoring programs.

The third section presents a set of detailed guidelines for development of an ambient air monitoring program. The stepwise procedure of defining objectives, compiling existing information, selecting sampling and analysis methods, selecting a sampling strategy, specifying QA and safety procedures, and defining data format is presented. The intended purpose of this section is to give the reader an appreciation for the factors to be considered in designing a monitoring program at each stage of development. This section again emphasizes the importance of the technical/policy interface, especially in the definition of program objectives. Although the development process is presented as a stepwise process, it is actually an iterative process wherein conflicts between overall objectives and sampling and analysis limitations must be reconciled through modification and/or technical refinement of the program plan. The iterative nature of the development process is described at appropriate points in the document.

The final section is a detailed review of sampling and analysis state-of-the-art wherein both screening and detailed (specific) techniques are described. This section is intended to allow the user to select specific methods for use. In addition, the physical and chemical properties of compounds to be considered in selection of appropriate methods are discussed. The latter aspect of the document is extremely important since in most monitoring situations concentrations of certain compounds must be determined for which specific methods have not been devised. Furthermore, combining several compounds into one analysis will often be desirable from a cost standpoint (as opposed to monitoring each compound by a specific method) and knowledge of chemical and physical properties is necessary in this "method consolidation" process.

Figure 1 diagrams the topic areas of the document. This figure as well as the index at the end of the document are provided to aid the reader in locating portions of the TAD of specific interest.

LIST OF ABBREVIATIONS

AFD	--	alkali flame detector (same as NPD)
ASTM	--	American Society for Testing and Materials
DFTPP	--	decafluorotriphenylphosphine
ECD	--	electron capture detector
EPA	--	U.S. Environmental Protection Agency
ESP	--	electrostatic precipitator
eV	--	electron volts
FID	--	flame ionization detector
FTIR	--	Fourier transform infrared spectrometry
FPD	--	flame photometric detector
GC	--	gas chromatography
HECD	--	Hall electrolytic conductivity detector
HPLC	--	high performance liquid chromatography
IR	--	infrared spectrometry
IS	--	internal standard
KV	--	kilovolts
LRMS	--	low resolution mass spectrometry
m^3	--	cubic meters
mg	--	milligrams
m/e	--	mass to charge ratio
MID	--	multiple ion detection
MS/MS	--	Tandem mass spectrometry (e.g., triple quadrupole mass spectrometry)
MS	--	mass spectrometry
NBS	--	National Bureau of Standards
NIOSH	--	National Institute of Occupational Safety and Health
NO_x	--	oxides of nitrogen
NPD	--	nitrogen-phosphorus selective detector
PAH	--	polynuclear aromatic hydrocarbons
PCB	--	polychlorinated biphenyls
PCN	--	polychlorinated naphthalene
PID	--	photoionization detector
pKa	--	logarithm (base 10) of the dissociation constant for an acidic compound
pKb	--	logarithm (base 10) of the dissociation constant for a basic compound
ppbv	--	parts per billion on a volume basis
ppmv	--	parts per million on a volume basis
QA	--	quality assurance
RCRA	--	Resource Conservation and Recovery Act
SIM	--	selected ion monitoring
SRMs	--	standard reference materials
TAD	--	technical assistance document
TCDD	--	tetrachlorodibenzodioxin
TEA	--	thermal energy analyzer
TSCA	--	Toxic Substances Control Act

UV	--	ultraviolet spectrometry
UV-VIS	--	ultraviolet-visible spectrometry
WCOT	—	wall coated open tubular capillary column

TABLES

Number		Page
1	Organic Compounds Being Considered for Regulation Under Clean Air Act Amendments	6
2	Technical Objectives Requiring Definition	10
3	Technical Information to be Used in Development of a Monitoring Plan	15
4	Factors to be Considered in the Selection of Sampling and Analysis Methods	20
5	Quality Assurance (QA) Activities to be Specified in Program Plan	29
6	Sampling Techniques for Gas Phase Organic Components	39
7	Particle Sampling Approaches	45
8	Typical Commercially Available Screening Techniques for Organics in Air	50
9	Colorimetric Screening Techniques for Determining Classes of Organic Compounds	57
10	Commonly Used GC Stationary Phases	63
11	Common GC Detectors	64
12	Useful Dual GC Detector Combinations	67
13	Comparison of Reversed and Normal Phase HPLC	73
14	HPLC Detectors	75
15	Classification of Organic Compounds for Ambient Air Monitoring Studies	77
16	Measured Concentrations of Organic Compounds in Urban Air	78

TABLES
(Continued)

Number		Page
17	Summary of Sampling and Analysis Methods for Organic Compounds in Ambient Air	81
18	Summary of Sampling and Analysis Methods for Selected Toxic Organic Compounds	89
19	Calibration Requirements for Sampling and Analysis Instrumentation	97
20	Typical Sampling/Analysis Frequencies for QC Samples	99

CONTENTS

	Page
Foreward	iii
Preface	iv
Abstract	v
Figures	viii
Tables	ix
Abbreviations	xi
1. Introduction	1
2. Regulatory and Related Issues Concerning Toxic Organic Monitoring	4
3. Guidelines for Development of a Monitoring Plan	8
Definition of Objectives	8
Compilation and Evaluation of Available Information	14
Selection of Sampling and Analysis Methods	18
Selection of Sampling Strategy	24
Specification of Quality Assurance Protocols	27
Definition of Data Reporting Format	35
Safety Considerations	35
4. Sampling and Analysis State of the Art	37
Overview of Sampling Methods	37
Overview of Analytical Methods	47
Methods for Specific Compounds and Compound Classes	74
Quality Assurance Procedures	94
References	103
Appendix	108
Topic Index	119

FIGURES

Number		Page
1	Topical Flowchart for Technical Assistance Document	3
2	Flowchart for Development of a Monitoring Plan	9
3	Flowchart for Selection of Sampling and Analysis Methods	21
4	Quality Assurance Organization	28
5	Typical Sampling Data Sheet	32
6	Chain of Custody Record	33
7	Block Diagram of a Typical Gas Chromatograph	60
8	Capillary and Packed Gas Chromatographic Columns	61
9	Approximate Gas Chromatographic Detector Ranges	65
10	Block Diagram of a Typical GC-MS System	69
11	Typical Configuration of an HPLC System	72
12	Method Validation Scheme	95

ABSTRACT

This project had as an objective the development of a Technical Assistance Document (TAD) for sampling and analysis of toxic organic compounds in ambient air. The primary users of this document are expected to be regional, state, and local environmental protection personnel who are faced with the need to determine ambient air quality for regulatory or information gathering purposes.

The TAD consists of the following four sections:

(1) Introduction
(2) Regulatory Issues Related to Toxic Organic Monitoring
(3) Guidelines for Development of a Monitoring Plan
(4) Sampling and Analysis State of the Art.

A topical index is included to assist the reader in locating the pertinent subject areas within the document.

FOREWARD

Measurement and monitoring research efforts are designed to anticipate potential environmental problems, to support regulatory actions by developing an in-depth understanding of the nature and processes that impact health and the ecology, to provide innovative means of monitoring compliance with regulations, and to evaluate the effectiveness of health and environmental protection efforts through the monitoring of long-term trends. The Environmental Monitoring Systems Laboratory, Research Triangle Park, North Carolina, has responsibility for: assessment of environmental monitoring technology and systems; implementation of Agency-wide quality assurance programs for air pollution measurement systems; and supplying technical support to other groups in the Agency, including the Office of Air, Noise and Radiation, the Office of Toxic Substances, and the Office of Enforcement.

Determination of toxic organic compounds in ambient air is a complex task, primarily because of the wide variety of compounds of interest and the lack of standardized sampling and analysis procedures. Prepared at the request of the Office of Air Quality and Standards, this document provides overview information and technical guidance concerning the determination of toxic organic compounds in ambient air. This information should be of value to many federal, state, regional, and local environmental protection agencies.

Thomas R. Hauser, Ph.D.
Director
Environmental Monitoring Systems Laboratory
Research Triangle Park, North Carolina

PREFACE

The determination of toxic organic chemicals in ambient air is an area of concern for many environmental protection personnel. There exist intense regulatory pressures to gather data concerning human exposure to such chemicals, however, sampling and analysis methodology for performing such measurements is not standardized (unlike inorganic and "criteria" pollutants for which specific methods have been issued.) Consequently each group performing such measurements must assess the methodology available and establish appropriate sampling and analysis protocols.

This technical assistance document (TAD) has been written for the purpose of providing such personnel with a basis for developing specific monitoring plans for toxic organic chemicals. However, this document does not circumvent the need to have highly skilled technical personnel organizing such monitoring efforts and the TAD should not be used as a rigid, step-by-step guide for developing monitoring plans.

Individual readers will find only certain subject areas within the TAD to be of interest and therefore a "Topical Index" has been provided to assist in locating relevant information.

EPA-600/4-83-027
June 1983

TECHNICAL ASSISTANCE DOCUMENT FOR SAMPLING AND ANALYSIS OF TOXIC ORGANIC COMPOUNDS IN AMBIENT AIR

by

R. M. Riggin
Battelle-Columbus Laboratories
505 King Avenue
Columbus, Ohio 43201

Contract No. 68-02-3745 (WA-1)

EPA Project Officers:

L. J. Purdue
Quality Assurance Division
Environmental Monitoring Systems Laboratory
U.S. Environmental Protection Agency
Research Triangle Park, North Carolina 27711

and

H. G. Richter
Air Management Technology Branch
Office of Air Quality Planning and Standards
U.S. Environmental Protection Agency
Research Triangle Park, North Carolina 27711

ENVIRONMENTAL MONITORING SYSTEMS LABORATORY
OFFICE OF RESEARCH AND DEVELOPMENT
U.S. ENVIRONMENTAL PROTECTION AGENCY
RESEARCH TRIANGLE PARK, NORTH CAROLINA 27711

Environmental Protection Agency
Library
Dearborn Street
60604

NOTICE

This document has been reviewed in accordance with U.S. Environmental Protection Agency policy and approved for publication. Mention of trade names or commercial products does not constitute endorsement or recommendation for use.

U.S. Environmental Protection Agency

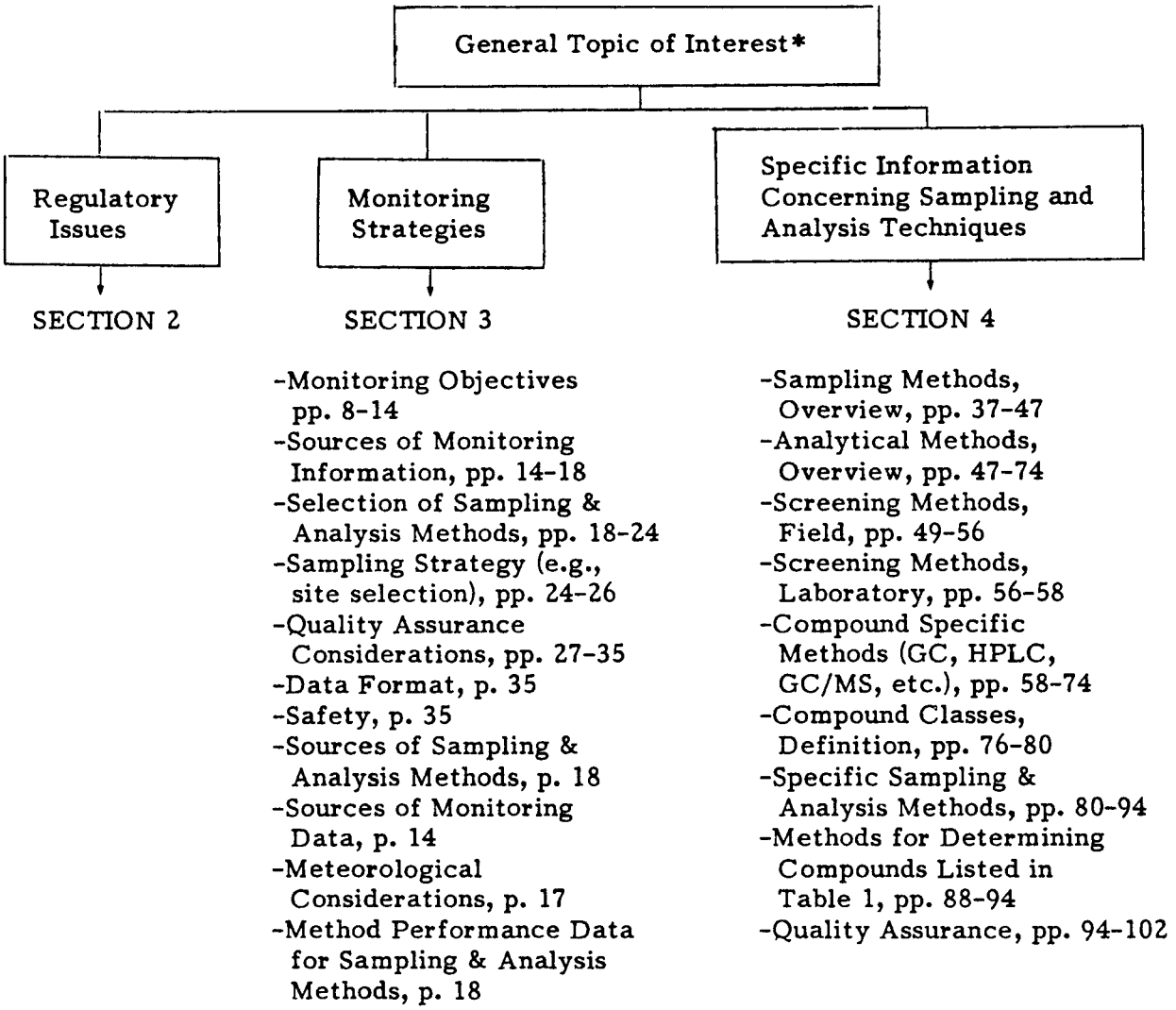

Figure 1. Topical flowchart for technical assistance document*

*Consult Index for specific topics.

SECTION 2

REGULATORY AND RELATED ISSUES CONCERNING TOXIC ORGANIC MONITORING

The primary motivations for conducting ambient air monitoring of toxic organics are: (a) regulatory requirements, (b) emergency situations (i.e., chemical spills and fires) and nuisance complaints, and (c) air pollution research activities. The types of activities classified as "air pollution research activities" are listed in the last paragraph of this section. Each of these topical areas have distinct requirements for ambient air monitoring which are important to recognize.

The regulatory needs for ambient air monitoring are obviously diverse and constantly being modified. At the federal level the regulations having the greatest impact on ambient air monitoring are the Resource Conservation and Recovery Act (RCRA), the Clean Air Act, and the Toxic Substances Control Act (TSCA). Although the Occupational Safety and Health Act requires monitoring of workplace air, this situation is quite distinct from ambient air monitoring and is not considered in this discussion.

RCRA governs the disposal of hazardous waste and a significant impact of this legislation is the need to monitor toxic organics in ambient air in the vicinity of landfills, abandoned dumpsites, etc. Proposed regulations require landfill operators to establish an ambient air monitoring system, although this requirement may be modified or eliminated in the future. A more common and certain monitoring activity related to RCRA is the need to monitor a wide variety of toxic organics in the areas around abandoned dumpsites. Such monitoring programs are necessary in order to determine whether such facilities represent a hazard to persons living in the area and are especially critical during cleanup or related construction activities during which hazardous materials may be released to the atmosphere.

The existing portions of the Clean Air Act most directly affecting ambient air monitoring for toxic organics are Sections 108-110, 111, and 112. Section 111 provides for the control of new and existing sources of non-criteria pollutants which may reasonably be anticipated to endanger public health. To date regulations have been proposed for several chlorinated solvents, including trichlorethylene, perchloroethylene, methylene chloride, methyl chloroform, and chlorofluorocarbon 113 using Section 111.

Section 112 of the Act is considered to be more directly applicable to toxic organics. This section requires EPA "to publish, and from time to time revise, a list of air pollutants which cause or contribute to air pollution which may reasonably be anticipated to result in an increase in mortality or an increase in serious irreversible, or incapacitating reversible, illness". To date benzene and vinyl chloride are the only organic

compounds listed as hazardous air pollutants under this section of the Act. The development of a more complete listing of hazardous air pollutants is slowed by the lack of reliable health effects data needed to establish casual relationships between specific compounds and health impairment.

EPA is reviewing a number of organic chemicals to determine the need for regulation. Among those with the highest priority is the group listed in Table 1. If regulated or as part of the process of review, specific ambient air monitoring programs for these chemicals may be undertaken.

Sections 108-110 of the Act are intended to apply to those pollutants which can be reasonably anticipated to endanger the public's health or welfare and for which emission to the air result from numerous and diverse sources. As such these sections could be used in certain instances to establish an ambient air quality standard for a toxic pollutant. Establishment of an ambient air quality standard would set in motion development of state implementation plans (SIPs) for control of existing sources, and new source performance standards under Section 111 for control of new sources. With regards to SIPs one of the major focuses is ambient air monitoring. Minimum monitoring requirements for SIPs are specified for the purpose of determining compliance with the National Ambient Air Quality Standards (NAAQS) as well as determining the degree of control required of emitting sources.

However, these are not the only purposes for conducting ambient air quality monitoring under the Clean Air Act. For example, monitoring may be performed for source characterization studies in response to an episode situation or research related activities.

TSCA gives EPA authority to secure information on all new and existing chemical substances and to control any of these substances determined to cause unreasonable risk to the public health or environment. While TSCA does not directly require ambient air monitoring for regulatory purposes, it does require that information on environmental behavior and fate as well as likely sources of environmental discharges and exposed populations be made avilable. To this end EPA's Office of Toxic Substances and various other agencies and industries have undertaken source, "fenceline", and ambient air monitoring programs for selected organic chemicals.

In addition to federal regulations, a variety of state and local regulations have required the development of ambient air monitoring programs. Discussion of all such regulations is beyond the scope of this document. Many of these regulations have been the result of public concern over localized air pollution problems, especially in highly industrialized areas. In many cases regional and local air monitoring programs have been implemented to determine the scope of the problem as well as the need for further or modified regulations. High instances of cancer and other chronic illness in certain geographical regions has led to the implementation of detailed monitoring programs for organic pollutants in air, wherein trace (ppb and below) levels of a wide variety of chemicals are determined over a wide area.

Emergency response activities are primarily related to chemical spills (e.g., during rail or highway transport of materials) and fires at chemical handling facilities. In such situations there exists an immediate need to conduct ambient air monitoring in the

Table 1. Organic Compounds Being Considered for Regulation Under Clean Air Act Amendments

Acetaldehyde	Ethylene oxide
Acrolein	Formaldehyde
Acrylonitrile	Hexachlorocyclopentadiene
Allyl chloride	Maleic anhydride
Benzyl chloride	Methyl chloroform (1,1,1 trichloroethane)
Carbon tetrachloride	Methylene chloride (dichloromethane)
Chlorobenzene	Nitrobenzene
Chloroform	Nitrosomorpholine
Chloroprene	Perchloroethylene (tetrachloroethylene)
o-,m-,p-Cresol	Phenol
p-Dichlorobenzene	Phosgene
Dimethyl nitrosamine	Polychlorinated biphenyls
Dioxin (2,3,7,8 tetra-chlorodibenzodioxin)	Propylene oxide
Epichlorohydrin	Toluene
Ethylene dichloride	Trichloroethylene
	Vinylidene chloride (1,1-dichloroethylene)
	o-,m-,p-Xylene

vicinity of the activity as well as in remote areas where transport of hazardous compounds is possible. Emergency monitoring situations differ from most regulatory related activities in several important ways. Since acute rather than chronic effects are of concern, the required detection sensitivity is less stringent. However, in many cases the exact compounds of interest may not be immediately known and hence a broad range of monitoring techniques must be used to ensure detection of the toxic compounds. In addition, the regulatory related monitoring activities are generally not time critical and development of a monitoring strategy can be accomplished over a several day or week period, whereas emergency situations obviously require immediate response without development of a detailed monitoring strategy. These differences in scope of the various monitoring situations will be discussed in more detail at appropriate points in the next section.

Nuisance complaints arising from the general public are primarily related to noxious odors, eye irriation, or, in some cases, more serious illness. Monitoring activities in this regard are similar to emergency response activities in that the chemicals of interest are often not known. However, the levels of interest may be a great deal lower in this situation due to the highly sensitive nature of the human senses.

Air pollution research activities require a wide variety of monitoring strategies. In general such research activities are concerned with one of the following topics:

- Identification of toxic organics
- Validation and refinement of sampling and analysis techniques for toxic organics
- Development and validation of air pollution models (e.g., dispersion, transport, etc.)
- Fate and transport studies of specific organic compounds
- Correlation of human health effects data with ambient air monitoring data.

In general such research activities are characterized by (a) a great deal of time and effort in development of a monitoring plan and (b) the need to detect trace levels of organic compounds, if present. While many research activities are directed towards the development and support of proposed regulations, they are distinguished from regulatory monitoring activities by having a more general scope and greater flexibility.

SECTION 3

GUIDELINES FOR DEVELOPMENT OF A MONITORING PLAN

Probably the most critical stage of an air monitoring program is the development of an appropriate monitoring plan. Such planning activities must be initiated well in advance of the desired completion time. The important steps in this development process are diagramed in Figure 2. While these steps can be listed sequentially, the development process is iterative and cannot be approached in a rigid stepwise format. Consequently, the following sections in which the development steps are discussed in detail should be viewed as an integral approach rather than a series of separable efforts.

DEFINITION OF OBJECTIVES

While definition of the specific objectives of a monitoring program is logically a necessary step, the importance of this stage of the development process is frequently underestimated. In most cases two levels of objectives, both of considerable importance, must be defined as illustrated in Figure 2. Broad, general objectives (e.g., to detect and identify toxic organics released from a particular type of process) normally are defined prior to initiation of a monitoring effort. These objectives are usually nontechnical and serve as guidelines for the development of specific technical objectives. At a minimum the technical objectives must define the aspects of the program listed in Table 2.

In general, the overall objectives will not automatically lead to the definition of a single set of technical objectives, i.e., several possible approaches must be considered. Consequently, the specific objectives stated by the technical personnel must be examined carefully by those persons responsible for defining the general program objectives to ensure that both parties understand the goals of the program as well as any technical limitations in meeting those goals. It must be recognized that at the present time sensitive methods do not exist for many organic compounds. Therefore, detection of all compounds of interest at the desired level may not be feasible. Regulatory requirements often precede technical feasibility.

An obvious first technical objective to be defined is the site or source of interest. In most cases the site of interest will be well defined (e.g., an abandoned dump, chemical spill, etc.). However, in some cases the definition of a specific site will require a great deal of effort and will not be accomplished until the detailed sampling strategy is developed, as discussed later in this section of the TAD. For example, if one has the general objective of identifying or studying transport characteristics of toxic organics in a

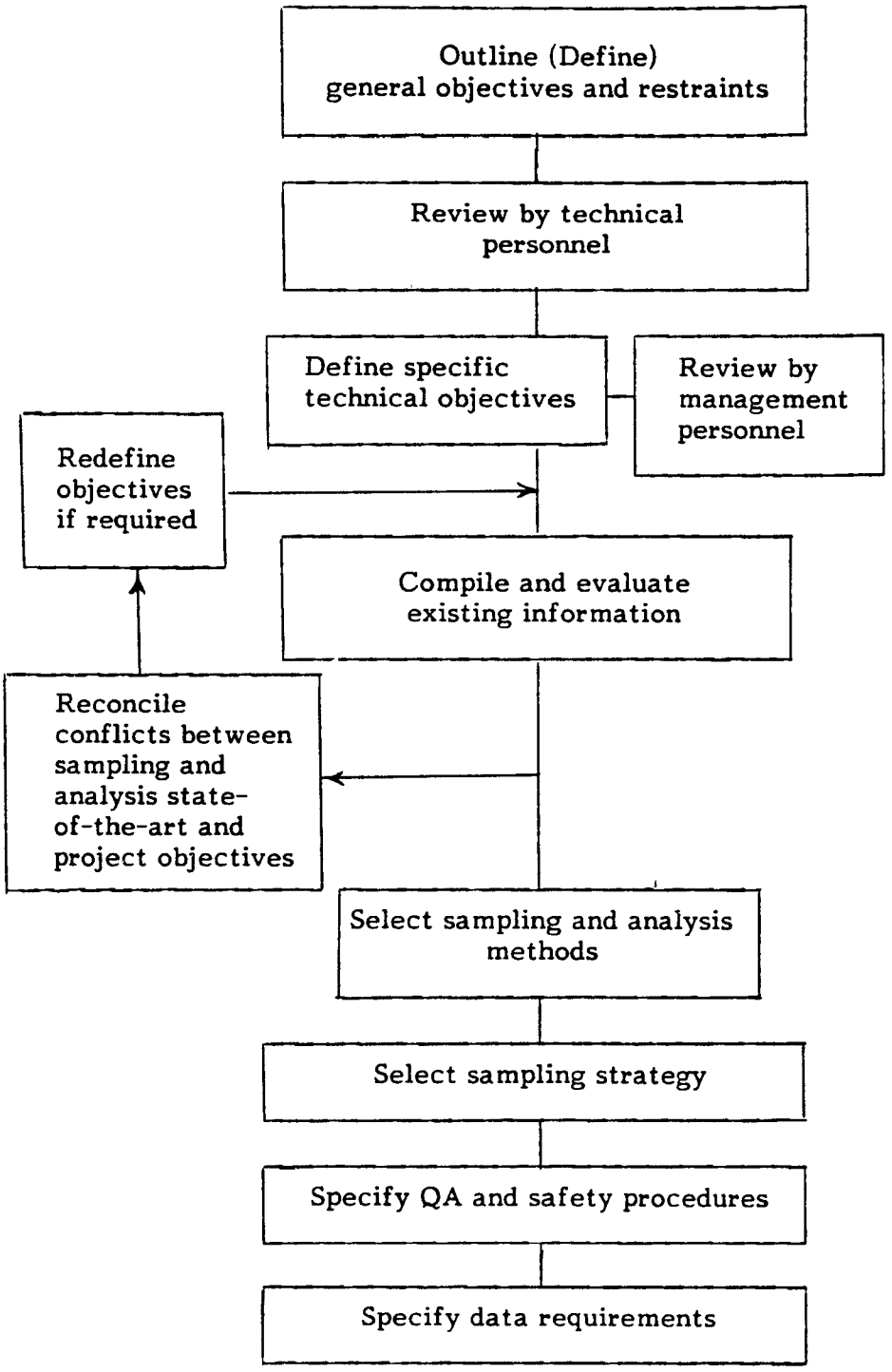

Figure 2. Flowchart for development of a monitoring plan

Table 2. Technical Objectives Requiring Definition

- Site of interest
- Compounds of interest
- Qualitative specificity (class or compound specificity)
- Method performance parameters
- Physical state of interest (gas, particle, or total)
- Cost restraints
- Data quality objectives (requirements)

particular city, the definition of the sites to be monitored will properly await the selection of a detailed sampling strategy.

The compound(s) of interest in a particular program appear to be an easily defined objective. However, one must recognize that selection of too broad a range of compounds will lead to excessive cost whereas selection of too few compounds may result in non-attainment of the general program objectives. In most cases the selection of a specific set of target compounds will represent a compromise between technical feasibility and environmental significance. For example, if a particular compound is emitted from a source in the region and the program objective is to evaluate the environmental impact of that source, then monitoring of this compound is a requirement regardless of technical limitations.

On the other hand, if a program has the objective of describing transport of toxic organics over a wide region, selection of the compounds of interest must heavily consider technical feasibility. In this case, methods capable of detecting a wide range of compounds simultaneously should be employed and compounds requiring specialized procedures should be included only if the environmental significance of the compounds in the region is substantial.

A further consideration is the stability of a compound in the atmosphere. If a compound is rapidly degraded in the atmosphere, through hydrolysis, oxidation, photolysis, or other processes, then one must consider the option of monitoring degradation products, rather than the compound itself. Likewise one must consider the possibility of formation of a particular compound of interest in the atmosphere. For example, formaldehyde is a common oxidation product of olefinic compounds in the atmosphere. Therefore, if one wishes to describe the impact of a source emitting formaldehyde, the formation rate of formaldehyde from olefinic materials must also be considered.

In many cases, the objectives of a program can be attained using class specific screening procedures rather than more expensive compound specific methods. In many cases class specific or nonspecific (total organic) techniques can be conducted in the field, often in "real time". Consequently, the use of a two-tiered (or "pilot" study) approach is often advisable, wherein these procedures can be used to rapidly define emission "hot spots", approximate concentrations, and types of compounds emitted. Subsequently, appropriate compound specific techniques can be employed to gain more detailed information.

The two-tiered monitoring approach is a simple example of using two sets of technical objectives to meet a single set of general overall objectives. There are many other cases where overall objectives will be best attained through the sequential accomplishment of specific technical objectives. This approach allows the knowledge gained in one monitoring effort to facilitate planning of subsequent efforts. In many cases, this sequential approach may be the only viable alternative due to information gaps or technical limitations.

Method performance characteristics should be carefully considered in the planning stage since these characteristics have a very profound effect on the cost and probable success of a project. The specified ranges of the performance characteristics should be compatible with the intended use of the data. In certain cases, regulatory requirements may dictate the use of a specific sampling and analysis method. In such cases, project

personnel should still evaluate the method characteristics and state any limitations impacting the success of the project.

The major method characteristics of concern are:

- Detection limit
- Accuracy (absolute and relative)
- Precision
- Interferences (selectivity)
- Analysis time.

Obviously the more stringently one defines these requirements, the more costly a program becomes, often without a direct increase in useful information. Conversely, if one does not specify sufficiently rigid performance criteria, the data obtained may be of little value. Unfortunately, these performance goals are difficult to define because of the large number of determining variables (e.g., sampling location, sampling time, source composition, etc.). In addition, some of these parameters (e.g., accuracy) are difficult to determine experimentally because the wide variation in source characteristics can influence these parameters. Accuracy is particularly difficult to assess because of the lack of organic Standard Reference Materials. Consequently, these parameters should be initially defined as guideline "ranges" and should be rigidly defined only in cases where the exact requirements are known.

Required detection limits will vary considerably depending on the compound of interest, the sampling location relative to the source, meteorological conditions, and available sampling time. Detection limits should always be defined in terms of component concentration in air ($\mu g/m^3$ or ppbv), rather than a method detection limit (e.g., in micrograms), since the latter value is subject to a great deal of interpretation (e.g., sampling time, etc.). In general, the range of detection limits required for toxic organics will vary between 0.1 ppbv and 10 ppmv. Detection in the 0.1-10 ppbv range will be required for ambient air studies where sites are remote from emission sources, whereas 1-10 ppmv detection limits may be sufficient for monitoring in the vicinity of chemical spills, dumpsites, and other concentrated sources. Obviously, highly toxic compounds will require more stringent detection limits in most cases.

Certain classes of compounds (e.g., halogenated compounds) can be detected at very low levels because of unique characteristics and the availability of special detectors. Consequently, one typically will obtain data on these compounds at low levels irrespective of the project requirements. However, alternative approaches in such cases include the use of shorter sampling periods or more general procedures capable of detecting other compounds of interest. These alternatives may reduce costs without losing the desired information. Therefore, one should not set detection limit criteria based solely on the available detection limit since flexibility is lost in this process.

Some compound classes (e.g., highly polar materials such as alcohols and acids) cannot be detected at low levels. For these compounds one must decide whether or not the program objectives can be met using available analytical methods, toxicological properties being the primary consideration. If not, then one is left with the difficult choice of either (a) undertaking a frequently costly development program to improve the methodology, (b) reducing the program requirements to allow partial fulfillment of the objectives, or (c) not undertaking the program at all.

Accuracy and precision requirements are normally more flexible than detection limit requirements and usually do not result in a major revision of program objectives. However, several aspects of the accuracy and precision requirement need to be addressed. The required accuracy is defined primarily by the method of data comparison. If data collected on one program are to be compared to data collected on another program, perhaps conducted at a different time, then absolute accuracy is important. In other words, one should know the accuracy for each program.

However, if one simply desires to know the ratio of component concentration at two sites or at the same site at different times of the day then relative accuracy may be more important than absolute accuracy. In this case, the only requirement is that the accuracy be the same for each data point. The relative accuracy concept is especially useful when using class specific screening techniques since the absolute accuracy will be known only if the specific compounds giving rise to the response are known, whereas the relative accuracy is known so long as the relative proportion of the various compounds being detected is constant. In a strict sense absolute accuracy for a method can be determined only when a suitable NBS (or NBS traceable) standard is available and can be analyzed under conditions duplicating the actual sampling and analysis progress.

Precision requirements are somewhat related to accuracy requirements since for a given atmospheric concentration the measured quantity is a function of both accuracy and precision. If one desires a certain degree of confidence that a measured signal is representative, then an appropriate number of replicate determinations must be made. The more precise the method, the fewer measurements need be made to attain a given degree of confidence in the data. Precision and accuracy will both become poorer as analyte concentrations approach the detection limit.

Specificity, degree of interference by other materials, for a method must be considered in the definition of project objectives since this aspect influences data accuracy as well as the range of compounds to be evaluated. If large quantities of innocuous compounds are present at the sampling location the selection of compounds of interest, as well as sampling and analysis methods, should be based on circumventing potential interference problems whenever possible. This problem often limits usefulness of nonspecific screening procedures since the response from background components may overwhelm any response due to trace levels of toxic materials. If such interferences cannot be avoided by judicious selective of the compound of interest, then alternative sampling and analysis procedures which minimize the interference problem must be selected. In any case, compounds which represent potential interferences in a given program should be listed, in addition to the compounds of interest to aid in the selection of appropriate sampling and analysis techniques.

A frequently ignored program objective is the physical state of interest. Organic compounds can be present in the gas phase or bound to various types of particles (e.g., dust, flyash, water droplets, etc.). Relatively nonvolatile materials such as benzo(a)pyrene exist predominately in the particle phase at ambient temperatures. However, most compounds are distributed partially into each phase and this distribution is influenced by atmospheric conditions. Furthermore, the distribution is altered by most sampling techniques to some extent and hence the data obtained are influenced by the sampling approach selected.

In most cases, the total concentration (gas as well as particle bound) of a component is sufficient information. However, if the particle bound concentration is of interest

(e.g., for inhalation toxicology considerations) one must recognize that the data will be influenced heavily by the choice of sampling technique.

A final, and often overriding program objective (restraint) is the allowable cost. Frequently, the cost is specified, within limits, prior to any other specific program objectives. While this state of affairs must be accepted, one should not allow such limitations to be used as an excuse to collect low quality data. If the specific program objectives cannot define a technically feasible and scientifically valid program, then a redefinition of scope, an expansion of available funding, or termination of the program are the only valid alternatives. The impact of limitations recognized by technical project personnel must be clearly and openly stated to appropriate management personnel in order to avoid implementation of an ill-conceived monitoring program.

COMPILATION AND EVALUATION OF AVAILABLE INFORMATION

The efficiency with which an air monitoring program can be developed and implemented is highly dependent on the extent and quality of technical information available during the development phase of the program. In most cases this information will be used in an iterative fashion to develop specific technical objectives for the monitoring program (as depicted in Figure 2), since such objectives must be realistic and achievable. Information most useful in this process can be roughly categorized into the areas listed in Table 3.

Probably the most useful information is data from previous air monitoring programs in the region. Although such information is seldom directly relevant (e.g., due to differences in the compounds monitored, sites used, or other program objectives) some aspects of the data normally will be useful. For example, total hydrocarbon data from the region may be useful in predicting sites and/or times having maximal pollutant concentration. Data for a compound of interest may be available from a site similar to the one of interest, thereby giving an "order of magnitude" estimate of pollutant concentration to be anticipated.

Additional useful information which could be gained from such studies includes compound stability in air under various conditions, degradation products formed, other compounds present in conjunction with the compound of interest, phase distribution of the compound in ambient air, and performance data for sampling and analysis methods of interest. As with all sources of information, critical evaluation is necessary in order to determine the quality and relevance of the data reported.

The acquisition of air monitoring data is not particularly straightforward because of the large number of sources of such data and the wide variety of program objectives. Some primary sources of such data include:

- U.S. Environmental Protection Agency, Research Triangle Park, N.C.
- Regional offices of the U.S. EPA
- State and local environmental protection (or equivalent) offices
- Contractors and universities performing work through contracts or grants with EPA or related agencies
- Peer review journal articles and government reports.

Table 3. Technical Information to be Used in Development of a Monitoring Plan

Previous Air Monitoring Data

Composition of Emission Sources in the Region (especially organic compound sources)

Meteorological Conditions

Sampling and Analysis Methods and Performance Data for Compounds of Interest

A wide variety of other government and related research organizations may have available data in specialized areas (e.g., Electric Power Research Institute, Palo Alto, CA; Department of Energy; National Oceanic and Atmospheric Administration).

Although a few data compilations are available (71), no comprehensive source of monitoring data exists. Consequently, the best approach towards obtaining relevant data is to contact several sources (local as well as regional or national) and to describe the type of monitoring information desired. Since data specifically relevant to the program are probably not available, one should seek to obtain any potentially useful monitoring information. In many cases references within these documents may lead to additional useful data. Table 16 provides some measurement data for selected toxic organics in urban air.

Critical evaluation of available data should address the following points:

- Documentation of sampling and analysis techniques in terms of detection limit, precision and accuracy, specificity and analysis speed
- Sampling strategy in terms of reference points and spatial and temporal resolution
- Documentation of atmospheric conditions
- Influence of emission sources in the region.

The purpose of this evaluation should be to assess the relevance of the data to the program being developed; therefore aspects of the data having no relevance to that program need not be evaluated.

Since most ambient air monitoring programs will be impacted by emission sources in the region, data concerning the composition of such emission sources are extremely useful. Programs having the objective of assessing the impact of a particular source on the environment obviously require knowledge of the source composition, whereas other programs need source emission information to avoid biasing the data as a result of contamination by the source. Typical sources of concern include:

- Chemical production, processing or handling facilities
- Fuel sources (gasoline stations, storage tanks, etc.)
- Mobile sources (automobiles, etc.)
- Chemical waste landfills, lagoons, etc.
- Miscellaneous sources (dry cleaners, sewers, residential heaters, etc.).

Information concerning emission components from chemical production or related manufacturing facilities may be available from the plant operator. Discharge permits represent another source of information. Since such facilities differ widely, depending on the chemical processes contributing to the emissions, one can seldom rely on information available from similar facilities to any great extent. Furthermore if the program objective is to assess the impact of the source on regional air quality, simultaneous measurement of the source emissions and the ambient air is highly desirable since the composition of a single source can vary considerably with time. Knowledge of production schedules and similar factors is extremely useful in predicting the degree of variability.

In the case of fuel sources, mobile sources, dry cleaners, etc. the qualitative nature of the emissions can be predicted fairly well since these sources have been extensively

characterized and in the case of drycleaners only one or two compounds (e.g., perchloroethylene or Stoddard solvent) are in use. Consequently, one can predict in advance whether or not these sources will interfere with the ambient air monitoring effort. In general, a useful monitoring approach assuming these source contributions are not being evaluated, is to locate sampling stations at sites remote and/or upwind from such sources, using screening techniques such as flame ionization or photoionization detection to locate the points of high source contribution. This approach requires that only the location of the source be determined, not the detailed composition. However, if the contribution of such sources to regional air pollution is being evaluated, knowledge of the detailed source composition will be required and should be made part of the overall monitoring program.

Knowledge of meteorological conditions is important to ambient air monitoring programs in several regards. The impact of a particular source on regional air quality will be highly influenced by meteorological conditions since dilution rates, transport rates, and compound stability are dependent on these conditions. Overall regional air quality, representing the summation of source contributions, will be influenced by these conditions in the same manner.

A detailed discussion of meteorological considerations in air quality monitoring is given in the Air Pollution series by Stern[1] and is beyond the scope of this document. Meteorological parameters of primary concern include the following:

- Wind speed and direction
- Temperature
- Humidity
- Barometric pressure
- Solar radiation intensity
- Precipitation
- Mixing height.

While these data should be collected during the course of the monitoring program, prior knowledge of typical conditions can be extremely useful in selecting sampling points.

Regional meteorological data can be obtained from the National Weather Service in the locality of interest. However, one must recognize that localized meteorological conditions, not apparent from the National Weather Service data can exist. For example, wind speed and turbulance can be affected by obstructions such as tall buildings in the area. Fog may occur selectively in marshes or in hilly areas. Surveillance of the sampling site and discussions with persons familiar with the area can be useful in selecting sampling sites yielding favorable meteorological conditions.

Availability of suitable sampling and analysis techniques is often the limiting factor in the development of a comprehensive air monitoring program, in spite of the large number of techniques which exist. Since virtually every air monitoring program has a different list of compounds of interest, a variety of techniques will be required to cover this range of components, resulting in a significant cost impact on the program. Furthermore, unique requirements in terms of specificity, detection limit, analysis time, and other performance characteristics may require modifications to existing methods. Consequently, a highly desirable approach is to develop program objectives which are in consonance with the capabilities of available sampling and analysis techniques wherever possible. In order to use this approach without severely limiting the program objectives

one must have available as much relevant information on sampling and analysis techniques as possible.

Primary sources of sampling and analysis methods include the following:

- National Institute for Occupational Safety and Health (NIOSH) Methods[2]
- American Society for Testing and Materials (ASTM) Methods[3]
- Methods of Air Sampling and Analysis[4]
- Peer review and journals and government reports
- EPA Reference Methods (Federal Register).

Methods for a number of toxic organic compounds of particular concern are presented in Section 4. Contacts with various persons active in air quality monitoring is also an effective means of gathering recent information on sampling and analysis methods. Unfortunately, no compendia of analytical methods for toxic organics at low ambient concentrations have been developed. The NIOSH and many ASTM methods are designed for workplace or source concentrations and may require substantial modification to detect ambient concentrations.

Available sampling and analysis methods should be evaluated with regard to the following performance characteristics:

- Selectivity (range of compounds detected and potential interferences)
- Detection limit
- Precision and accuracy (often unknown)
- Analysis time
- Cost
- Quality of performance evaluation data.

The methods should be evaluated from two standpoints; (a) the degree to which method performance has been documented under conditions similar to those expected and (b) the adequacy of the performance characteristics for achieving the program objectives.

If method performance is not well documented one must decide whether or not to include further documentation as part of the monitoring program with the resultant increase in data quality as well as cost. A similar decision must be made when existing methods are slightly modified (e.g., extended to similar compounds, etc.). One must recognize that some assumptions concerning method performance will inherently be part of any monitoring program due to cost and time limitations (i.e., documentation of all performance character-istics under each set of monitoring conditions is prohibitively time consuming and expensive). Consequently, those assumptions which are made should be based on strong technical logic and should be carefully documented.

SELECTION OF SAMPLING AND ANALYSIS METHODS

Once a set of program objectives, including specification of the compounds of interest, have been developed and information concerning sampling and analysis techniques has been evaluated, the next logical step is selection of the sampling and analysis procedures to be used in the monitoring program. Factors to be considered in selecting

sampling and analysis methods are outlined in Table 4. A useful stepwise approach to this selection process is depicted in Figure 3.

The important chemical and physical properties to be considered include thermal stability, volatility, polarity, ionic character, phase distibution, and chemical composition. The manner in which these properties determine the suitability of analytical as well as sampling procedures is discussed in detail in Section 4.

Volatility, thermal stability, polarity, and ionic character determine the extent to which commonly used gas chromatographic procedures are suitable for the compounds. These properties also must be considered in the selection of sample preparation procedures since solvent extraction and concentration procedures may result in loss or degradation of volatile or thermally labile compounds.

Phase distribution (gas/particle) of a compound is obviously dependent on the other physical and chemical properties but must be considered separately since sample preparation procedures for particle bound compounds will usually be different than for gas phase compounds. Compounds which are likely to be present in both phases require special consideration. Sampling methods can sometimes be employed to drive the equilibrium into one phase or the other if only the total concentration is to be determined (e.g., by using a heated filter).

Chemical composition, specifically the presence of heteroatoms, is often the most important factor in assigning compounds to a particular analytical group. Specialized chromatographic detection systems tend to be specific for a particular class of organic compounds and selective colorimetric procedures are available for certain classes of compounds as well. However, one must avoid oversimplication of the grouping process by automatically placing compounds having a particular functional group in a single class. Individual compounds may have unique properties making placement in another class more suitable. For example, gas chromatography with electron capture detection (GC/EC) is sensitive and selective for detection of many halogenated compounds, but does not respond well to vinyl chloride, chlorobenzene, or 1,2-dichloroethane. Hence these compounds should not be grouped with other halogenated compounds targeted for GC/EC analysis.

Familiarity with the analytical procedures available is an obvious requirement in the compound grouping process. One must recognize that analytical procedures include both sample preparation and compound determination steps, each of which must be considered in the assignment of a compound to a particular analytical group. Simply specifying gas chromatography/mass spectrometry (GC/MS), for example, as the analytical technique does not define an analytical procedure.

The anticipated relative concentrations of the various compounds of interest should be considered in the grouping process. Compounds present at high levels may be candidates for direct analysis in the field (e.g., by portable GC) since sample concentration techniques might not be necessary. At the other extreme trace components may require sample concentration as well as cleanup steps to obtain sufficient sensitivity and selectivity.

A final consideration in the grouping process is the relative importance of the various compounds to the program objectives. While a formal priority ranking of the compounds normally is not required one should consider relative importance in the

Table 4. Factors to be Considered in the Selection of Sampling and Analysis Methods

Physical and chemical properties of compounds
Relative and absolute concentrations of compounds
Relative importance of various compounds to program objectives
Method performance characteristics
Potential interferences present at site
Time resolution requirements
Cost restraints

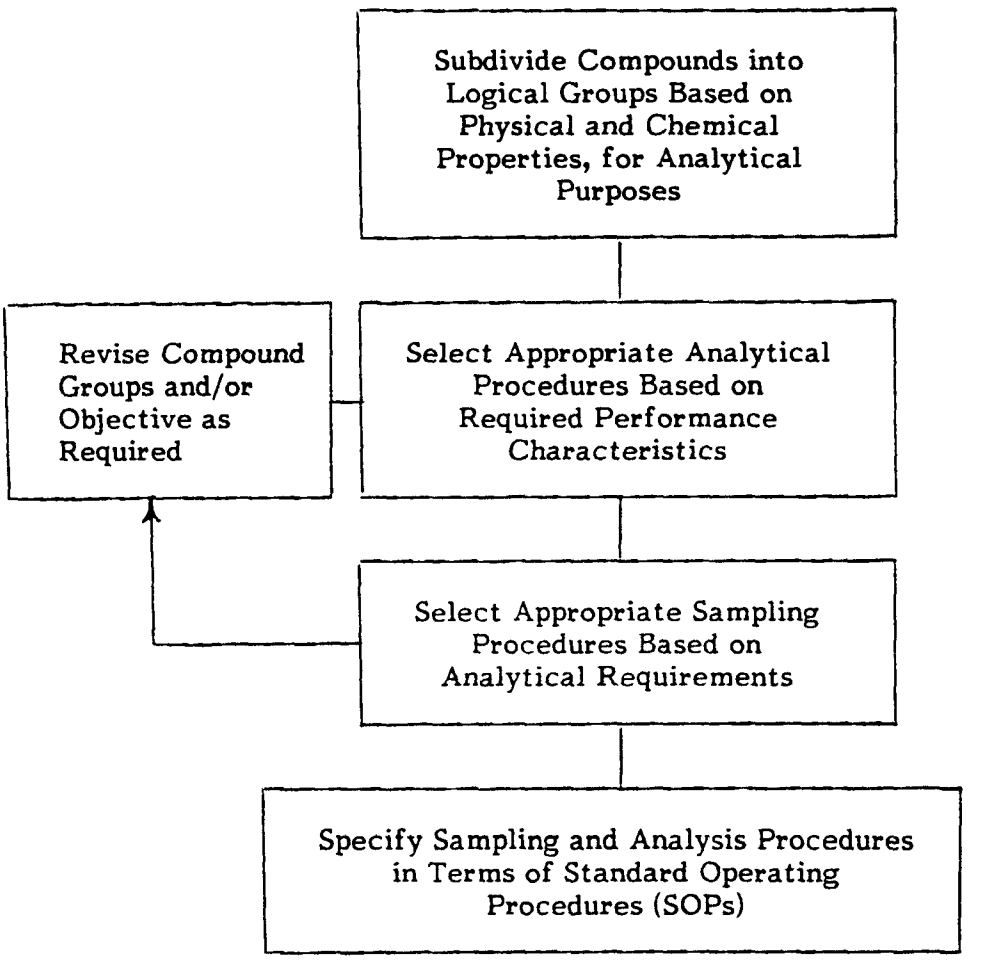

Figure 3. Flowchart for selection of sampling and analysis methods

following qualitative manner. Compounds of special concern, either because of high toxicity or known emission sources, should be grouped so as to optimize analytical performance for these compounds. In certain cases this process may include placing compounds of high priority in unique groups, targeted for specialized, specific analysis techniques. Compounds of lesser interest should be placed in the appropriate groups selected for optimal detection of the compounds of primary concern, usually with some comprise in analytical performance.

The selection of analysis procedures is largely guided by the compound grouping process in which the available analytical techniques were heavily considered. However, the definition of analytical procedures in terms of specific operating parameters should normally await completion of the grouping process.

Relatively few standardized analytical procedures for toxic organics are available. Consequently, program technical personnel will normally have the responsibility of defining specific sample preparation procedures and chromatographic operating conditions, as well as writing the detailed standard operating procedures for the monitoring program. Factors to be considered in this selection process include required detection limit, specificity, accuracy, precision, analysis time, and cost, all of which were considered in the development of project objectives. The task of specifying standard operating procedures for analytical methods must be accomplished in conjunction with the specification of sampling protocols, since detection limits and other method performance characteristics are a function of both steps.

Accuracy, precision, analysis time, and cost are determined by the choice of sampling and analysis techniques and in many cases, cannot be substantially improved by refinement of the methods. Consequently one must weigh these factors carefully during the method selection process to ensure that the program requirements are achievable using the technique selected. Method specificity can be altered to some extent by the addition of cleanup steps to the analytical methods but is still highly dependent on the type of detection system used.

Detection limits, on the other hand, can be substantially adjusted by the selection of specific operating parameters within the sampling and analysis methods. Parameters contributing to the detection limit include:

- Detector sensitivity (minimum quantity of material introduced into the instrument which gives a detectable response)
- Proportion of sample introduced into the instrument
- Volume of sample collected
- Recovery of component through the entire sampling and analysis procedure.

These parameters can be related to the detection limit by the following equation:

$$DL\ (\mu g/m^3) = \frac{S_D\ (\mu g)}{P_s\ (\%) \times V_s\ (m^3) \times R\ (\%)} \times 10^4$$

where:

S_D = Detection sensitivity
P_s = Percentage of total sample introduced into the detection system
V_s = Volume of sample
R = Percent recovery.

This equation is useful as a guide for the selection of appropriate sampling and analysis parameters. However, one must realize that many of these parameters are in turn dependent on other factors. Detection sensitivity is dependent on the concentration of background components in the sample (i.e., practical detection sensitivity is limited by interference from background components, not by absolute instrument sensitivity). The proportion of sample which can be introduced into the instrument is also dependent on the quantity of background components present and can be substantially increased by the use of more effective cleanup techniques. Component recovery, on the other hand, can be adversely affected by the incorporation of additional cleanup techniques into the method.

Because of the limited number of sampling methods available, the selection of specific sampling protocols is best accomplished after the definition of analytical requirements, based on compound groups of interest, etc. However, the specification of detailed analytical procedures obviously requires knowledge of the sampling scheme (e.g., form of sample presented for analysis, sampling volumes, etc.).

Primary factors to be considered in the selection of sampling procedures include phase distribution, stability, and time resolution requirements. Compounds entirely contained in the particle phase can be readily sampled using filtration whereas gas phase components require more elaborate techniques such as resin sorption, impinger collection or cryogenic trapping. Stability of the components of interest during the sampling process must be considered. If necessary, samples can be removed from the sampling apparatus and stabilized (e.g., frozen) to prevent degradation. Stability can also be affected by the collection of reactive components components (SO_2, NO_x, Cl_2, etc.). Therefore sampling techniques which minimize the collection of such components should be selected whenever possible.

Time resolution requirements may prevent the use of certain techniques which cannot acquire sufficient sample in the required time period. If extremely fine time resolution is required, continuous monitors (e.g. flame ionization or photoionization detectors) may be the only acceptable alternative. Techniques of this type are usually not specific for particular organic components, and this limitation must be weighed against the importance of time resolution.

After sampling and analyis procedures have been selected, the specific details of these methods (e.g., sampling volumes, cleanup steps, etc.) can be selected, considering the detection limit requirements in particular. Subsequently one must examine the program objectives to determine the capability of the sampling and analysis scheme to accomplish these goals. Once any differences between sampling and analysis capabilities and program objectives have been resolved, the sampling and analysis procedures should be written into detailed "standard operating procedures" as a final step in the method specification process.

The preceding discussion has presented the important parameters to be considered in the selection of appropriate sampling and analysis procedures. This discussion has

necessarily centered on the complex interdependency of the various parameters to be considered in the selection process. The summary provided below and diagrammed in Figure 3, will provide the reader with a workable approach to the method selection problem.

The primary steps in the selection process include:

- Subdivide compounds into logical groups based on similar analytical characteristics. This process will result in a preliminary selection of generic analysis techniques, since analytical techniques must be considered in the grouping process.

- Specify detailed analytical procedures based on the guidance provided by the grouping process, considering accuracy, precision, time, and cost requirements. Incorporate additional cleanup schemes based on selectivity requirements, if necessary.

- Select sampling procedures based on analytical requirements and physical properties of the compounds.

- Specify sampling and analysis parameters (sample volumes, final extract volumes, etc.) based on detection limit requirements.

- Reconcile conflicts between program objectives and sampling and analysis capabilities. Redefine objectives and/or undertake procedure development efforts as required.

- Write detailed "standard operating procedures" for the sampling and analysis methods.

SELECTION OF SAMPLING STRATEGY

Selection of a sampling strategy capable of meeting the program objectives is vital to the success of any monitoring program. Parameters which must be specific include:

- Sampling locations
- Numbers, sampling volumes, and time points of samples to be taken at each location
- Meteorological parameters to be monitored and dependency of sampling strategy on these parameters.

Obviously the development of a sampling strategy can be extremely simple or extremely complex, depending on the program objectives. Programs involving characterization of the pollutant contribution from a point source tend to be more straightforward whereas programs investigating fate and transport characteristics of components from diverse sources require more elaborate sampling strategies. An excellent discussion of the factors to be considered in developing a sampling strategy is provided in the Air Pollution series by Stern[5].

The selection of an optimal sampling siting plan must take into account the following factors:

- Locations of stationary as well as mobile sources
- Transport characteristics of pollutants from these sources and influences of meteorology and topography on these characteristics
- Spatial resolution required to meet program objectives
- Availability of space and utilities for operating sampling equipment at potential sites.

Relevant information on optimum site selection criteria are available in various EPA documents[6]. One should consult such documents in developing a siting plan.

The necessity for locating stationary and mobile sources prior to site selection has been previously discussed and should be readily apparent. One must not only have knowledge of the existance of these sources but also the trajectory of emitted pollutants under the existing meteorological and topographical conditions. Avoiding sample contamination by these sources or, conversely, accurately measuring the pollutant contribution of these sources may require continuous monitoring of meteorological parameters and adjustment of sampling location or timing accordingly. In some cases the siting process can be aided through the use of air quality models, in particular disperson models which predict concentration profiles for pollutants emitted from point sources under various meteorological conditions. The placement of reference (control) sites upwind of known emission sources is included in most monitoring schemes to determine the contribution of those sources. Additionally wind direction must be continuously monitored in these situations to ensure the validity of the reference samples.

Spatial resolution requirements obviously are highly dependent on the program objectives. If one is attempting to estimate pollutant concentrations in the vicinity of a point source (e.g., hazardous waste landfills) spatial resolution of a few tens or hundreds of meters may be required whereas programs monitoring pollutant transport through an urban area may require resolution of a few miles or tens of miles. In determining spatial resolution requirements one must realize that a sampling site provides only the concentration at a given point and that data point is used to represent the pollutant concentration over the entire area between the sampling site and adjacent sampling sites. Consequently factors which lead to spatially inhomogeneous pollutant concentrations must be carefully considered in the siting process (i.e., spatial resolution requirements will be more restrictive in areas of inhomogeneous concentrations). Such factors include low wind velocities, presence of tall buildings and other obstacles, and source emission variability.

In certain specialized cases vertical as well as horizontal resolution is required. In most cases vertical sampling requires use of an aircraft acquiring samples at various altitudes depending on air flow characteristics. Since this requirement is infrequently encountered in toxic organic monitoring, further discussion in this document is not warranted.

The use of mobile sampling facilities to provide greater flexibility (e.g., in response to changes in wind direction, etc.) is an attractive option in many cases and can be a cost effective means of providing greater spatial resolution. In many cases a continuous screening monitor, such as a photoionization detector, may be used to define the need for, and optimal placement of, fixed monitoring stations.

A final consideration in the siting process is the availability of space and utilities for operating sampling equipment. This requirement is well recognized and does not

require a great deal of emphasis in this document. Obviously the selection of sites should be done with the knowledge of available locations and utilities. However, in cases where utilities are not readily available portable utilities (e.g., generators, heaters, or air conditioners) must be provided. In many cases these portable units represent a potential pollution source and hence contamination of samples may result if their placement is not carefully considered.

After selection of appropriate monitoring locations one must consider the sampling requirements in terms of timing and numbers of samples. The reference mentioned above[5] provides a useful discussion of time resolution considerations. In many respects time resolution and spatial resolution requirements place similar demands on the sampling scheme. Continuous screening monitors can be used to determine time dependency of pollutant concentrations, and hence define time resolution requirements more accurately. As with spatial resolution, time resolution requirements may not be uniform for a given program. Certain time periods may require finer time resolution than during other time periods (e.g., related to traffic patterns, production schedules, etc.).

In order to achieve adequate time resolution one must be able to collect sufficient sample in the allowed time. In some cases the sample quantity requirement may result in the need to use multiple sampling devices at each sampling location, although modern analytical instruments tend to provide sufficient sensitivity to obviate this situation.

The numbers of samples to be collected at each site/time point is obviously dependent on the variability of the sampling and analysis methods, the precision requirements of the program, and cost limitations. In many cases replicate analysis of a single sample, rather than replicate sampling will be employed, in which case only analytical precision is determined. In other cases samples collected at different times and/or sites may be treated as replicate samples due to homogeneous spatial and temporal distribution of pollutants, hence overcoming the need to take multiple samples at each site/time point.

Sampling volume, specified in the previous section of this document may become a variable in the monitoring strategy as well. If pollutant concentrations varying over a wide range (not predictable in advance), or if pollutants of greatly differing concentrations are to be monitored, one should consider the possibility of collecting multiple samples of varying volumes at each site/time point. In this maanner one has some assurance that at least some of the samples will contain levels of analyte within the operating range of the analytical instrument. This approach is vital in certain cases where the entire sample is introduced into the analytical instrument (e.g., Tenax resin/thermal desorption techniques) and is of lesser importance when a selectable proportion of the sample is analyzed.

Meteorological parameters to be monitored usually will include temperature, barometric pressure, wind speed, wind direction, relative humidity, and precipitation. Wind speed and direction is probably the most important variable impacting the sampling strategy. In many cases one may wish to sample only when the wind is in a certain direction, due to favorable source transport characteristics. In some cases meteorlogical parameters may impact upon spatial and temporal resolution requirements in a manner such that variations in these parameters will change the sampling strategy with time.

SPECIFICATION OF QUALITY ASSURANCE PROTOCOLS

Overview

The term quality assurance (QA) refers to an overall system designed to monitor, document, and control the technical performance of a program. While the need for good QA protocols is widely recognized, the design and implementation of these protocols is frequently treated as a secondary part of the overall monitoring program. If the QA protocols for a monitoring program are to serve a useful purpose, they must (a) be readily implemented within the cost and time constraints of the program, (b) be appropraite in terms of providing useful control of technical performance, and (c) be well understood by the project personnel. Preparation of the QA plan for a monitoring program should be undertaken after the sampling strategy and sampling and analysis methods have been defined. This section of the TAD describes the important aspects of QA to be addressed prior to implementation of the monitoring program. A more detailed discussion of specific QA approaches for various sampling and analysis methods is given in Section 4.

A simplified view of an overall QA system is given in Figure 4. QA activities to be specified in the program plan are given in Table 5. The QA management function monitors and controls the various QA efforts including (a) design of the QA system prior to program implementation, (b) sampling, (c) analysis, and (4) data reduction. The functions of QA management as well as the specific QA requirements for sampling, analysis, and data reduction are discussed in the following sections of the TAD.

A series of volumes entitled Quality Assurance Handbook for Air Pollution Measurement Systems[7], available from EPA in Research Triangle Park, serves as a useful detailed guidance document in the QA area. In particular Volume I -Principles, and Volume II - Ambient Air Specific Methods may be useful in the field of toxic organic monitoring. Specific guidance for preparation of QA plans is provided in another EPA document[8]. QA practices are also discussed in Methods of Air Sampling and Analysis[4].

QA Management

The functions and responsibilities of QA management are a critical part of the overall monitoring program. These functions and responsibilities are listed in Table 5.

Designing a QA system involves specification of QA requirements for each aspect of the program, preparation of a program QA manual describing these requirements, and specification of auditing and other control procedures for ensuring proper implementation of the QA system. Although the design of the QA system for a specific program is the responsibility of QA management, input from the technical personnel responsible for implementing the program is required. Technical personnel must identify areas of technical performance requiring validation, documentation, or control, estimate costs for implementation of specific quality control functions, and critically evaluate QA documents (e.g., the program QA manual) prepared by QA management. Document control involves (a) specification of revision numbers and dates on QA manuals and related materials, (b) inspection and storage of calibration and maintenance logbooks for field and laboratory instrumentation, (c) inspection and control of laboratory record notebooks, and (d) control of chain of custody forms documenting sample deposition.

QA management is responsible for the evaluation of QA data in a timely manner. Failure to review the data immediately prevents implementation of timely corrective action procedures and may result in poor data quality.

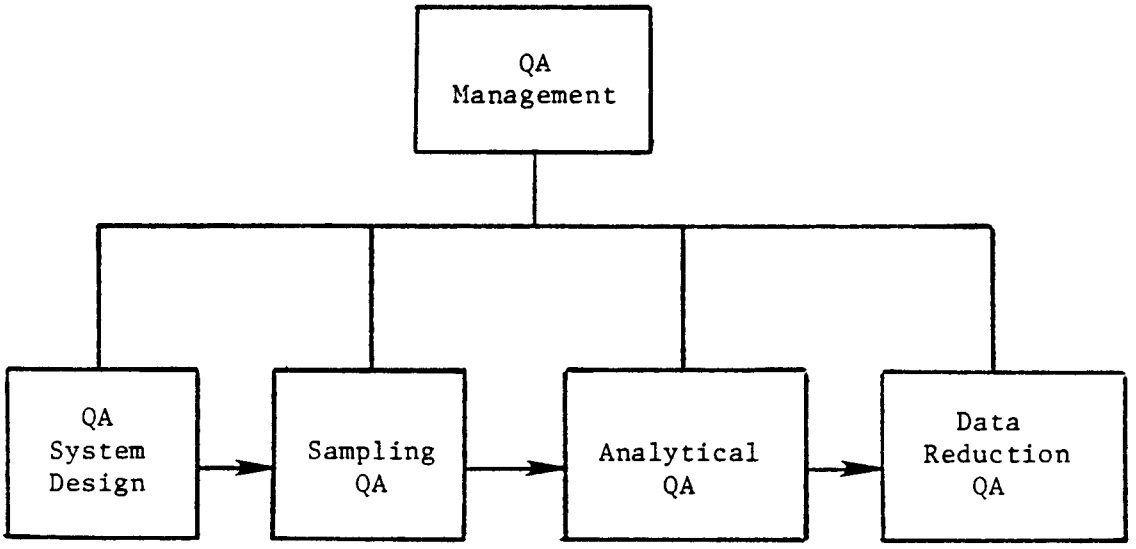

Figure 4. Quality assurance organization

Table 5. Quality Assurance (QA) Activities to be Specified in Program Plan

QA Management

- QA System Design
- Document Control
- Data Evaluation and Storage
- Audit Procedures
- Corrective Action
- QA Reports to Program Management
- Training

Sampling QA

- Site Selection
- Instrument Calibration and Maintenance
- Collection of Routine Quality Control Samples
- Data Recording
- Sample Labeling, Preservation, Storage and Transport
- Chain of Custody Procedures

Analytical QA

- Method Validation Requirements
- Instrument Calibration and Maintenance
- Quality Control Sample Analysis
- Data Recording

Data Reduction QA

- Merging Sampling and Analysis Data Files
- Storage of Raw and Intermediate Data
- Data Validation

Audit procedures include both performance and system audits. A performance audit involves introduction of a reference sample (blank, spike, standard reference material, etc.) into the analysis system in a blind fashion with subsequent assessment of the data. System audits involve a review of program documentation such as record notebooks, data files, and instrument logbooks to assess whether or not the QA system is operating properly.

In many cases data review or audit procedures will result in the need for corrective action. Corrective action may involve repeating certain aspects of the work or simply providing more detailed documentation for work already performed. In either case QA management will be responsible for documenting the need for, type of, and implementation of corrective actions.

QA management is responsible for providing scheduled as well as nonscheduled reports to program management. Scheduled reports include descriptions of the QA system prior to program implementation, QA data reports, and audit reports. Unscheduled reports generally describe corrective actions required and the impact of these actions on the program.

A final responsibility of QA management is to provide training to technical personnel. In particular, personnel need to be given a detailed view of the QA system and their responsibilities for its implementation.

Sampling Quality Assurance

Aspects of sampling to be addressed in the QA plan are shown in Table 5. Site selection considerations have been discussed in the section on sampling strategy development. However, the QA plan should specify factors which could result in a modification of the siting plan during the course of the monitoring effort (e.g., changes in source location or characteristics) and provisions for documenting any such modifications.

Instrument maintenance and calibration procedures should be specified to the extent possible in the QA plan. Any maintenance or calibration activity, scheduled or nonscheduled, should be recorded in an appropriate logbook in order to determine any effects on the data obtained. Typical calibration data obtained should include:

- Flow measurements
- Volume measurements
- Temperature measurements
- Pressure measurements
- Determination of response factors, precision, and accuracy for continuous monitors using span gases and zero gases.

In general the QA plan should specify routine calibration checks at several time points during the program.

Quality control samples to check overall system performance may include replicate or split samples, spiked samples, standard reference materials, blanks, and backup samples (e.g., series impingers or resin cartridges). Split or replicate samples are useful checks on sampling and analysis precision and should be included with each group of samples. Field blanks, in which the sampling activity is duplicated exactly except that no air is sampled, should also be routinely collected. Backup samples should be collected whenever the

recovery performance of a particular sampling medium has not been documented or is subject to wide variations depending on ambient conditions. Spiked samples should be included wherever an accurate spiking procedure is available, provided that the spiked material reasonably simulates the physical and chemical state of the native material.

Standard reference materials (SRMs) for organic analysis are rather sparse. The National Bureau of Standards (NBS) has certified an urban dust (SRM 1649) for selected polynuclear aromatic hydrocarbons and various gas suppliers will prepare certified standards of many organic components as dilute gas mixtures. These gas mixtures should be checked against NBS standard reference materials (e.g., propane in air) to ensure accuracy of the gas mixture. Routine calibration of continuous monitors using these certified gas mixtures is highly advisable. SRMs containing selected organic compounds at trace levels in air or nitrogen are presently being developed and should be available in the near future from NBS.

Data recording procedures to be specified in the sampling QA plan include (a) periodic readings of the temperature, flow, volumes, and other parameters, (b) documentation of meteorological conditions at appropriate time points, (c) documentation of instrument operating variables (e.g., resin cartridge number), (d) documentation of any upset conditions such as sudden leakage or pressure surges, and (e) documentation of calibration or maintenance activities. A logbook for the overall sampling program in which sampling descriptions, meteorological data, and upset conditions are documented should be maintained. In addition a sampling data sheet, such as the example in Figure 5, should be prepared for each sample or set of samples in which the periodic readings and instrument parameters are recorded. Certain measurements such as filter numbers and weights or impinger volumes which are required for analytical purposes can be recorded on a separate sheet with provisions for recording subsequent analytical data on the same sheet. Separate maintenance and calibration logbooks should be maintained for each instrument. In most cases, sampling data forms specific for a given program must be prepared because of differences in the sampling design between programs.

Sample labeling, preservation, storage, and transport procedures should be specified in the QA plan and these procedures should be carefully explained to field personnel prior to sampling to ensure proper implementation. Sample labels, prepared in advance, should include sufficient information to associate the sample with a particular data sheet as well as the overall program record notebook. In general each sample should be given a unique identification number with a prefix describing the type of sample.

Sample preservation, storage, and transport procedures must be appropriate for the type of analyses required. Particulate samples generally should be placed in air tight containers and stored in the dark to minimize analyte degradation. Resin cartridges and impingers generally require more attention, because of analyte instability in the matrix, and should be shipped to the laboratory for analysis within a relatively short time period (e.g., a few days). These sample types should be placed in airtight, glass containers and stored at subambient temperatures until analysis. Exposure to solvents must be avoided for resin cartridges during all stages of handling in order to avoid sample contamination.

Chain of custody forms are required for certain programs having direct legal implications. The objective of the chain of custody procedures is to document the movement of a sample from collection until analysis to ensure its integrity. A typical chain of custody form is shown in Figure 6. Formal chain of custody requirements place a substantial burden on the field as well as laboratory personnel and should be employed only

Sample I.D.	Sample Description	Date	Start Time	Stop Time	Location	Flow Rate, liter/min. Init.	Flow Rate, liter/min. Final	Atmospheric Pressure mmHg	Temp. °C	Operator	Calibration Data Reference	Comments

Figure 5. Typical sampling data sheet

CHAIN OF CUSTODY RECORD

Sample Number: _____

Shipper Name: _____

Address: _____
number street city state zip

Collector's Name_____ Telephone: (___)_____
signature

Date Sampled _____ Time Sampled _____ hours _____

Type of Process Producing Waste _____

Field Information _____

_____

_____

Sample Receiver:

1. _____
name and address of organization receiving sample

2. _____

3. _____

Chain of Possession:

1. _____ _____ _____
signature title inclusive dates

2. _____ _____ _____
signature title inclusive dates

3. _____ _____ _____
signature title inclusive dates

Figure 6. Typical Chain of Custody Form

when the program objectives specifically require such measures. However, if the data obtained are to be used in litigation, the use of chain of custody procedures is mandatory.

Analytical Quality Assurance

Aspects of the analytical work to be addressed in the QA plan include:

- Method validation requirements
- Instrument maintenance and calibration
- Quality control sample analysis
- Data recording.

Most monitoring programs will use new methods or modifications of existing methods to some extent. The QA plan must address the validation requirements for each of these methods. Typical requirements will include determination of precision, accuracy, detection limit, and specificity through the analysis of laboratory standards, and whenever possible, representative samples. The validation requirements should be appropriate for the program objectives and should simulate the actual sampling and analytical situation as nearly as possible. Validation data should be included as part of the monitoring report and method writeups and any limitations of the data in terms of defining the performance characteristics under the actual use conditions should be documented.

Instrument maintenance and calibration requirements for laboratory instruments will be similar to those for field instruments, including the need to document any activities of this type. To the extent possible calibration and preventive maintenance schedules should be included in the QA plan. The format for recording calibration data (e.g., injection of standards of known concentration) should be specified prior to initiation of the monitoring effort.

Quality control samples for evaluating analytical performance should include blanks, spiked process blanks, spiked samples, standard reference materials, and replicate (or split) samples. Standard reference materials and replicate or split samples should generally be included as part of field QA and need not be additionally included at the analysis stage. However additional blanks, spiked process blanks, and spiked samples should be included at the analysis stage since problems with sample instability and contamination during sampling storage or shipment can be determined separately from laboratory related problems. Both spiked process blanks and spiked samples should be included since this practice allows matrix effects to be distinguished from analytical losses.

Data recording requirements during analysis require a great deal of attention to ensure that all necessary raw data are available for inspection should unexpected results occur. The advent of computerized data handling tends to "hide" raw data from the analyst. Hence the QA plan should specifically state which raw data are to be recorded, the manner of presentation, and storage procedures. Laboratory data notebooks should include all raw data or a clear reference as to where the data are recorded (e.g., 9-track magnetic tape, etc.), equations used in performing intermediate calculations, and final results. Equations used for calculations, including units for all parameters, should be presented as part of the method writeups or program QA plan.

Data Reduction Quality Assurance

Since sampling and analytical data processing occurs independently, in most cases, the QA plan should address the manner in which data from the two activities are to be treated and validated during the reduction process. The actual presentation of data is described in the following portion of the TAD and will not be discussed here.

Aspects of data reduction to be treated in the QA plan are shown in Table 5. The extent of documentation and verification required will be greatly dependent on the program objectives, the nature of the raw data, and the complexity of the computational process.

DEFINITION OF DATA REPORTING FORMAT

Many air monitoring programs are undertaken without prior definition of the data reporting format. In some cases this appraoch is justified because of the unexpected nature of the data obtained (e.g., unexpected compounds detected or previously unknown sources identified). However, to the extent possible the format for data presentation should be defined prior to initiation of the monitoring effort. This practice helps to identify limitations on the available data and further clarifies the extent to which technical and management or policy personnel understand the program objectives. Stern's Air Pollution series[9] contains an excellent discussion of procedures for analyzing and presenting air quality data.

The optimal format for data presentation obviously is highly dependent on the program objectives and the quantity of data obtained. In cases where only a few data points are obtained around a point source (e.g., a hazardous waste landfill) tabular presentation of data (compound concentrations at each site) may be appropriate. However, in most monitoring situations the quantity and complexity of the data set will require graphical presentation. This type of data format requires definition of the important variables to be considered (e.g., source locations, sampling times, sampling sites, meteorological effects, etc.). Statistical methods for evaluating correlation between the important variables are usually required to obtain meaningful conclusions from the data set. Typical methods for statistically evaluating and displaying air quality data are given in Stern's book[9] and therefore are not presented here.

SAFETY CONSIDERATIONS

Safety considerations in air monitoring are similar to those for other chemically related occupations but should be considered for each air monitoring program since unusual hazards may be present in these situations. A discussion of general safety considerations is available[4]. Potential safety hazards can be subdivided into the following broad categories:

- Chemical hazards
- Electrical equipment
- Mechanical equipment.

Chemical hazards include toxic chemicals such as carcinogenic compounds, corrosive chemicals such as concentrated acids or bases, and explosive hazards such as

compressed gases. Protective equipment should be employed to minimize direct exposure to such hazards. Since most air monitoring programs require working with concentrated standards of toxic organic compounds, special emphasis should be placed on minimizing exposure to these materials. Programs involving investigation of concentrated or potentially concentrated sources of hazardous organic compounds require additional safety protocols to protect workers in the field as well as laboratory workers who could be unexpectedly exposed to concentrated samples collected at such sites.

Hazards from corrosive chemical, compressed gases, glassware, mechanical equipment, and electrical equipment are presented in the reference given above[4] and do not require special emphasis here. However, these hazards should be addressed in the monitoring plan.

SECTION 4

SAMPLING AND ANALYSIS STATE OF THE ART

This section of the TAD provides both general and specific information regarding sampling and analysis techniques. The section is divided into six parts as follows:

- Overview of sampling methods
- Overview of analysis methods
- Discussion of specific sampling and analysis methods for various compounds
- Quality assurance procedures
- Instrument calibration procedures
- Data handling.

OVERVIEW OF SAMPLING METHODS

Important Chemical and Physical Properties

In order to select optimal sampling techniques for a given compound or group of compounds one must consider the important properties of the compounds(s) of interest having an effect on the sampling process. Physical properties to be considered include boiling point, vapor pressure, water solubility, and solubility in various organic solvents. If a compound has sufficiently low volatility to be associated with particulate matter, one must also consider the size distribution of the particles and heat of adsorption of the compounds of interest.

Chemical properties of concern include thermal stability, reactivity with water or other common constituents in ambient air, and photochemical reactivity. The dissociation constant (pKa or pKb) for ionizable compounds should also be considered. The exact manner in which the various chemical and physical properties impact the sampling scheme is discussed below, with the discussion of individual sampling methods.

There are several useful handbooks which can be consulted to obtain information concerning the chemical and physical properties of organic compounds. These include the Handbook of Chemistry and Physics[10], the Merck Index[11], and the Handbook of Environmental Data on Organic chemicals[12]. The latter reference also contains useful information on environmental effects and regulatory limits for various industrial chemicals.

Methods for Gas Phase Components

Compounds which are predominantly in the gas phase at ambient temperature and pressure are generally sampled by passing the air sample through a filtration device to

remove particulate material prior to capture of the gaseous components. The sampling techniques commonly used for gas phase components are summarized in Table 6. In selected cases, direct analysis of the filtered gas stream is possible, circumventing the need for the capture process (e.g., direct GC with photoionization or electron capture detection). This situation is rare in ambient air monitoring for toxic organics because the low concentrations generally make preconcentration of the sample a necessity. A general discussion of the various sampling approaches for gas phase components is provided in Katz's book[13].

Solid Adsorbents--

Solid adsorbents are the media most commonly employed for sampling gas phase organics. The primary advantage of this sampling approach is the large volume of air which can be sampled relative to other techniques such as impingers or cryogenic sampling. These media can be generally divided into three categories as follows:

- Organic polymeric adsorbents
- Inorganic adsorbents
- Carbon adsorbents.

Organic polymeric adsorbents include materials such as Tenax^R GC and XAD-2. These materials have the important feature that water is not collected in the sampling process and hence large volumes of air can be collected. Another advantage of the organic polymeric adsorbents is the absence of "active sites" which can lead to irreversible adsorption of certain polar compounds. A major disadvantage of these materials is their inability to capture highly volatile materials (e.g., vinyl chloride) as well as certain polar materials (e.g., methanol, acetone).

Inorganic adsorbents include silicagel, alumina, Florisil^R, and molecular sieves. The materials are considerably more polar than the organic polymeric adsorbents, leading to the efficient collection of polar materials. Unfortunately, water is also efficiently captured leading to rapid deactivation of the adsorbents. Consequently, these materials are seldom used for sampling trace organic components in air, except in cases where relatively high concentrations of certain polar materials are of concern.

Carbon adsorbents are relatively nonpolar compared to the inorganic adsorbents and hence water adsorption is a less significant problem, although the problem may still prevent analysis in certain applications. The carbon based materials tend to exhibit much stronger adsorption properties than organic polymeric adsorbents, hence allowing efficient collection of volatile materials such as vinyl chloride. However, the strong adsorption on carbon adsorbents can be a disadvantage in cases where recovery by thermal desorption of less volatile materials such as benzene or toluene is desired because of the excessive temperatures required (e.g, 400 C).

There are a variety of carbon based adsorbents available with widely varying adsorption properties. The commonly available classes of carbon adsorbents include:

- Various types of conventional activated carbons
- Carbon molecular sieves
- Carbonaceous polymeric adsorbents.

Conventional activated carbons have a microporous structure which leads to difficulty in recovering adsorbed materials and hence this material is rarely used in trace organic sampling.

Table 6. Sampling Techniques for Gas Phase Organic Components

Solild Adsorbents

- Organic Polymers (Tenax, XAD-2)
- Inorganic (Silica gel, Florisil)
- Carbon (Activated Carbon, Carbon Molecular Sieves)

Cryogenic Trapping

Impingers

Whole Air Collection (Cannisters, Glass Bulbs)

Derivatization Techniques

Carbon molecular sieves have a spherical, macroporous structure which leads to better recovery of adsorbed materials (relative to conventional activated carbons). These materials are sold under various tradenames (e.g., Spherocarb, Carbosphere, Carbosieve, and Ambersorb XE-347) and have been used to a limited extent for the determination of volatile organics such as vinyl chloride and methylene chloride[14]. Much more work needs to be done in this area before the usefulness of such adsorbents can be established.

Carbonaceous polymeric adsorbents are described as hard, nondusting spheres with properties intermediate between activated carbon and organic polymeric adsorbents. These materials are available from Rohm and Haas Chemical Company under the tradename "Ambersorb" (XE-340, XE-347, XE-348). Of the three materials, Ambersorb 347 is classified as a carbon molecular sieve, XE-348 is most similar to activated carbon, and XE-340 is most similar to organic polymeric absorbents. XE-340 appears to have some attractive features in terms of trace organic sampling and has been shown to be useful for volatile compounds in the C_4 to C_6 boiling point range[15,16], a volatility range not covered by organic polymeric adsorbents such as Tenax.

In selecting particular adsorbent materials for sampling trace organics one must consider both the capture process and the compound recovery process. In general, one of two recovery processes are employed, thermal desorption or solvent extraction. Thermal desorption is most useful for compounds having boiling points less than 300 C whereas solvent extraction is most useful for compounds boiling above 150 C. Thermal desorption is an attractive approach in many cases since the entire sample can be introduced onto the analytical instrument compared to solvent extraction where only a small fraction of the extract (e.g., 1-10 percent) can be introduced. Furthermore, the thermal desorption process is more readily automated and does not require disassembly of the sampling cartridge prior to analysis.

Solvent extraction offers the advantage of being able to adjust the concentration of analyte introduced into the analytical system (i.e., to remain within the working range of the instrument) and also allows replicate analysis of a sample, features not available for most thermal desorption systems. Use of solvent extraction also avoids the problem of thermal decomposition of labile compounds during the analysis step.

Although a wide variety of approaches employing solid adsorbents may be feasible for any given monitoring situation the following summary offers useful guidance for generalized cases:

- Thermal desorption of organic polymeric adsorbents (especially Tenax GC) is useful for compounds boiling between 60-300 C, exclusive of highly polar compounds such as methanol and acetone.

- Solvent extraction of organic polymeric adsorbents (especially XAD-2) is most useful for compounds boiling above 150 C and can in some cases be extended to more volatile compounds depending on solvent and mode of concentration.

- Thermal desorption of carbon adsorbents (especially carbon molecular sieves or Ambersorb XE-340) may be useful for compounds boiling in the range 0-70 C, including vinyl chloride. However, the high desorption temperatures required (350-400 C) may lead to degradation of certain labile compounds.

If medium or high concentractions of compounds are of concern, solvent desorption of carbon adsorbents may be a useful alternative.

- Inorganic adsorbents such as silica gel or alumina are not generally useful for ambient air monitoring because of the water deactivation problem.

Cryogenic Collection--

The collection of atmospheric organics by condensation in a cryogenic trap is an attractive alternative to adsorption or impinger collection. The primary advantages of this technique include:

- A wide range of organic materials can be collected
- Contamination problems with adsorbents and other collection media are avoided
- The sample is immediately available for analysis without further workup
- Consistent recoveries are generally obtained.

However, an important limitation of the technique is condensation of large quantities of moisture, and lesser amounts of certain reactive gases (SO_2, NO_x, etc.). The principles of cryogenic sampling are described in Stern's Air Pollution series[16].

Cryogenic sampling can be accomplished in a variety of ways, depending on the desired detection limit and compounds of interest. The important parameters to be specified include:

- Choice of cryogen
- Trap design
- Method of sample recovery
- Method of analysis.

Useful cryogens include liquid oxygen, liquid argon, dry ice-solvent systems, and ice water. Liquid nitrogen is not an acceptable cryogen because large quantities of air will condense. Ice water is not cold enough for collecting organics in ambient air, except for relatively nonvolatile compounds. Dry ice-solvent systems should be employed with caution because of the high probability of contaminating the sample with relatively large quantities of solvent. Liquid oxygen or argon appear to be the most generally applicable cryogens, although the safety hazards associated with liquid oxygen make its use less attractive.

The design of a suitable sample trap is extremely important in cryogenic sampling. One must ensure that the air residence time in the trap during sampling is great enough to allow cooling of the gas stream and condensation of the analyte of interest. The trap material must be able to withstand the wide temperature range involved in the sample process. The trap design must also be appropriate for the sample recovery step, allowing efficient recovery without loss or contamination of the sample. For highly volatile materials, the inclusion of an adsorption medium such as silica gel may be necessary to obtain good collection efficiency.

Cryogenically collected samples can be recovered either by flash evaporation into an analytical instrument or by solvent flashing of the trap. The former approach is preferable in most cases since it allows more sensitive detection and avoids contamination (e.g., from solvents). However, the solvent flushing approach can be accomplished with less elaborate equipment in the field and may be preferable for the analysis of higher concentrations of material.

A generally applicable cryogenic sampling approach for monitoring trace organics in ambient air has been described[17]. This system involves the use of a small (3 mm ID) freeze out trap held at liquid argon or liquid oxygen temperature and packed with silanized glass beads. A 50-500 ml volume of ambient air is drawn through the trap using an evacuated tank/manometer assembly as the pumping and volume measurement system. The trap is directly connected to a six-part stainless steel valve and following sampling collection the condensed material is flash evaporated onto a capillary GC/FID system for analysis. Detection limits on the order of 0.5 to 1 ppbv can be achieved using this approach. Even lower detection limits can be achieved for certain compound with the use of selective detectors, such as electron capture (ECD).

This technique requires transport of the analytical system to the monitoring site, or collection of a whole air sample in an evacuated cylinder with subsequent laboratory analysis. For higher boiling compounds adsorption onto container walls may represent a significant problem if the latter approach is employed.

Impinger Collection--

Impinger or "bubbler" collection involves passing the gas stream through an organic solvent or other suitable liquid and capture of the analyte by partioning into the solvent (special derivatization impinger systems are discussed later in this document). This technique is not generally applicable for trace organic analysis because large volumes of air cannot be sampled, due to solvent evaporation during the sampling process. However, this technique is relatively simple and may be useful in high level (ppm) monitoring situations.

The impinger should be designed so that contact between the air and solvent is maximized, either by the use of fritted diffusers or capillary jets. Some typical impinger designs are given in Stern's book[18]. In general, the impinger systems should be cooled in ice water so as to reduce solvent loss during sampling.

Whole Air Collection--

Collection of whole air samples using evacuated glass bulbs, stainless steel canisters, or similar devices is probably the simplest sampling approach, and can be useful in many situations. An obvious limitation of this approach is that the sample components of interest may be adsorbed or decomposed through interaction with the container walls. At very high analyte levels (e.g., several ppm) condensation may be a problem. Consequently, this approach is most useful for relatively stable, volatile compounds such as hydrocarbons and chlorinated hydrocarbons with boiling points less than 150 C. However certain compounds within these classes pose storage stability problems (e.g., carbon tetrachloride interacts with stainless steel surfaces and is lost). Preconditioning surfaces (e.g., formation of an oxide coating) or selection of alternate container materials can circumvent these problems in many cases. In all cases, the container must be flushed (with moderate heating if possible) with zero grade nitrogen or air prior to sampling in order to remove trace contaminants.

Containers used for whole air sampling can be roughly categorized as rigid or non-rigid devices. Nonrigid devices include Tedlar^R or Teflon^R plastic bags. Generally such devices are used to collect samples for analysis within a few hours, since the rate of leakage and/or permeation of materials into and out of the bag is relatively high.

Rigid containers have an advantage in that leakage and/or permeation rates are generally low and samples can be stored for several days or even several months for certain compounds. Examples of rigid containers include:

- Glass bulbs
- Gas-tight syringes
- Stainless steel cylinders or cannisters.

Sampling into such devices can be accomplished either by evacuating the container in advance and then allowing sample to enter the container or by having both inlet and outlet valves on the container and pumping sample through the container until equilibrium is obtained (e.g., after 5-10 container volumes of sample has been flushed through the system). The first approach has the advantage that no sampling pump is required in the field. However, the latter approach has the advantage that equilibrium with the container walls is more readily achieved and high vacuum seals are not required.

An alternate sampling approach is to pressurize a whole air sample into a stainless steel cylinder. This approach has proven useful in ambient air monitoring studies[17] wherein electropolished 6-liter stainless steel cans were pressurized with ambient air to approximately 15 psi. Under these conditions, relatively volatile materials having boiling points less than 120 C had stable concentrations for one to two weeks. This approach has the advantage that a relatively large volume of air can be collected and transported to the laboratory for analysis. However, condensation of material will become a significant problem as the container pressure is increased.

Derivatization Techniques--

A fundamental limitation of the various sampling techniques discussed so far is the decomposition of reactive compounds during collection or transport of the samples. Two approaches can be used to circumvent this problem. One obvious approach is to use a direct analysis technique in which the analyte concentration is determined without physically isolating the air sample (e.g., total hydrocarbon analysis).

An alternate approach, discussed in this section, is to stabilize reactive compounds by combining them with a derivatizing reagent during the sampling process. In many cases derivatizing reagents can be chosen which not only stabilize the compound but enhance its detectability. Such schemes are available for determining aldehydes, phosgene, and certain other reactive compounds.

In certain cases, such as the 4-aminoantipyrene method for phenols and the ninhydrin method for amines the derivatization step is used solely to enhance detectability and may be done in the laboratory rather than the field. In this section, only derivatization techniques for field use are considered. Derivatization schemes for specific compounds or compound classes are discussed later.

Derivatization reagents for field use can be held either in an impinger or on a solid adsorbent. The impinger approach is most convenient since reagents can be prepared and stored as liquid solutions whereas solid adsorbent systems require more elaborate preparation and storage procedures. However, the solid adsorbent approach is more sensitive in many cases because larger volumes of air can be sampled. A study of both these approaches for aldehyde derivatization has been reported[19]. In this particular example, the impinger approach appears most useful since it provides adequate sensitivity and is less susceptible to humidity effects on analyte recovery.

All derivatization techniques require the use of high purity reagents. Normally fresh stocks of reagent should be prepared for each sampling episode, or more frequently if degradation or contamination (through passive diffusion of materials into the reagent) is

a problem. One must be aware of potential interference in the method, especially from reactive gases present at high levels in the sample (e.g., water, SO_2, NO_2, O_3, etc.) and must incorporate QA procedures to ensure such interferences are not a problem.

Direct Analysis--

Probably the most attractive sampling and analysis approach is the direct analysis of atmospheric contaminants without collection of a sample. Methods fitting this definition for organic compounds include gas phase optical techniques, total flame ionization detection, and related techniques. The specific techniques are discussed in detail in the description of "field screening techniques" in the analytical section of the TAD. A major limitation of these techniques is sensitivity since no sample preconcentration is obtained.

Direct analysis techniques do not require sample collection and hence avoid problems with analyte degradation or adsorption during collection and storage. However, most of the techniques require delivery of the air sample to the analytical device through some type of tubing. Generally such tubing should be inert (e.g., teflon or passivated stainless steel) and heated (>100 C) to avoid wall losses. Generally a heated filter will be placed upstream of the analytical device to avoid interference from particulate matter.

Sampling Methods for Particle Bound Components

Relatively nonvolatile (boiling point greater than 200 C) and polar compounds may exist partially or exclusively on the surface of suspended particulate matter. The distribution of organic compounds between the gas and particle phase is greatly affected by the sampling conditions chosen. Certain components may be slowly driven from the captured particles during sampling whereas certain gas phase components may adsorb to filter media, hence appearing in the particle sample. Some types of particles (e.g., water mists) may volatilize during sampling. Consequently the "particle bound" concentration of an analyte is an operationally defined term and must be chosen so as to satisfy the program objectives. An important aspect of particle sampling for trace organic analysis is the need for a gas phase collection device (e.g., impinger, adsorbent, etc) downstream of the particle sampler since virtually all organics will be present in the gas phase or volatilize from the particle sampler to some extent. A detailed discussion of sampling considerations for particulate matter is given in Stern's book[20]. A listing of available particle sampling approaches is given in Table 7.

Filtration--

The most common method for collection of particulate matter is filtration. If only the total quantity of analyte is of interest the filter may be operated at an elevated temperature to drive material into the gas phase collection device, hence simplifying the analysis requirements. In general, compounds more volatile than anthracene will not be retained on the filter at a temperature of 150 C. If the particle bound concentration is to be determined the filter should be maintained at ambient temperature and the volume of gas sampled should be minimized to reduce volatilization of the particle bound components. Unfortunately, the low levels of ambient particulate matter usually require the collection of several hundred cubic meters of air (e.g., with a high volume sampler). Under these conditions even relatively nonvolatile compounds (e.g., 3 and 4 ring PAHs) may be lost to some extent. Chemical transformation of some adsorbed materials through the interaction with atmospheric gases (e.g., NO_x, SO_2, O_3) analyses can also be a problem in such situations.

Table 7. Particle Sampling Approaches

Filtration

- Cellulose Fiber
- Glass or Quartz Fiber
- Teflon Coated Glass Fiber
- Membranes

Centrifugal Collection (Cyclones, etc.)

Impaction

Electrostatic Precipitation

A variety of filter media are available for air sampling, are described in Katz' book[21]. The most commonly used filter media for sampling organics are:

- Cellulose fiber
- Glass or quartz fiber
- Teflon coated glass fiber
- Membrane (cellulose nitrate or teflon).

Cellulose fiber filters do not have uniform pore sizes and tend to have unpredictable collection efficiencies for fine particles. However, these filters have high mechanical stength and are inexpensive. Glass or quartz fiber filters have the advantage of withstanding higher temperatures and yielding better collection efficiencies than cellulose fiber filters. However, these filters tend to be mechanically fragile and require careful handling. An additional problem, especially with glass fiber filters is irreversible adsorption of organics onto the filter. This problem is less severe for quartz and is circumvented to a large extent by using teflon-faced glass fiber filters.

Membrane filters have a well defined pore size distribution and have very predictable sampling properties. However these filters are expensive, have a relatively high resistance to flow, and a rather low sample capacity. In addition, most of the membrane filters (with the exception of teflon) are soluble in organic solvents, hence complicating the analyte recovery process for organic compounds.

Centrifugal Collection and Impaction--

Most particle sampling approaches other than filtration are employed for the purpose of size classification of particulate matter. The primary reason for collecting size fractionated particle samples is to distinguish respirable (<15μm diameter) from larger particles. Although the most common objective is to compare particle mass in each size range, the chemical composition is of interest in certain cases. Methods for collecting size fractionated particulate samples generally rely on the difference in momentum (mass times velocity) of the various size particles. Devices operating on the principle include cyclones (centrifugal collectors) and impactors. Both of these devices collect particles of a specific size range, based on the design of the apparatus. Cyclones tend to have a rather broad size cut whereas impactors have a much sharper size cut. These devices are useful for particles greater than approximately 1μm in diameter and hence are often used as the basis for "respirable" particle determinations.

In a typical configuration two or more cyclones or impaction stages will be placed in series followed by a high efficiency filter to collect fine particles. In this scheme one could collect, for example, particle size fractions of >15 μm (cyclone 1), 1-15 μm (cyclone 2), and <1 μm (filter) diameter.

A device commonly employed for collecting size fractionated ambient particulate matter is the dichotomous sampler. This device consists of an impactor stage followed by a high efficiency filter. Particles greater than 15 μm diameter are excluded from the device. Particles with diameters less than 15 μm are collected on filters in two size fractions (2.5-15 μm and <2.5 μm). A recent study has compared the quantity of ambient particulate matter collected using the widely used "Hi-Vol" sampler (filtration collection only) and the "dichotomous sampler"[22]. Since the Hi-Vol sampler can collect particles of >15 μm this device will normally give higher particle loadings than the dichotomous samples.

A major problem in sampling ambient particulate matter for organic analysis is the quantity of sample which can be collected. This problem is especially acute for size fractionation type sampling procedures, due to flow rate limitations. A typical ambient particle loading of 50 μg/m^3 requires that 1000 m^3 of sample be collected in order to obtain 50 mg of particulate matter (a typical amount required for organic analysis). A Hi-Vol sampler requires 20 hours sampling time to collect this amount of material and a dichotomous sampler, typically operating at 50 liters per minute, would require 15 days.

A device has been developed by EPA for sampling large volumes of size fractionated ambient particulate matter[23]. This device called the "Megavolume Respirable Particulate Sampler" consists of a cascade impactor followed by an electrostatic precipitator. The absence of a filter reduces the pressure drop and allows higher sample flow rates (up to 15 m^3/minute). Particles of greater than 20 μm diameter are excluded from the sampling system and size ranges of 2.5-20 μm, 1.7-1.5 μm, and <1.7 μm are collected. This device has the disadvantage of being very bulky (4 ft x 2 ft x 2 ft) and the effect of electrostatic precipitation on chemical composition has not been thoroughly investigated.

Electrostatic Precipitation (ESP)—

This method is capable of capturing particles of greater than 0.1 μm and serves (for example in the sampler described above) as an alternative to filtration for the collection of fine particles. A high electrical field (12-45 KV) is maintained between a series of parallel plates. Particles entering the device become charged by ions present in the gas phase and are attracted to the plates.

This sampling approach allows large sample volumes to be collected, due to the lower pressure drop, compared to filtration. However, the effect of the corona discharge and associated reactive species (e.g., ozone) generated in the ESP on organic chemical composition is of concern and has not been thoroughly investigated.

OVERVIEW OF ANALYTICAL METHODS

In this section of the TAD, an overall description of analytical techniques is presented and the chemical and physical properties governing the applicability of the various methods for organic compounds are discussed. Analytical techniques have been subdivided into the following general categories:

- Field screening techniques
- Laboratory screening techniques (compound class methods)
- Compound specific techniques.

Field screening techniques (referred to as direct analysis techniques in the sampling section) are defined as relatively inexpensive techniques which can be accomplished rapidly in the field. Laboratory screening procedures are defined as techniques such as infrared spectroscopy which can determine functional group concentrations as opposed to concentrations of specific compounds. Relatively expensive compound specific techniques for laboratory use, and in selected cases for field use (e.g., portable MS system) are discussed in the final category.

Physical and Chemical Properties of Concern

In many respects the physical and chemical properties to be considered in the selection of sampling methods are of similar importance in the selection of analytical

methods. However, important differences in emphasis exist and must be recognized. Properties of primary concern include:

- Physical state (gaseous or adsorbed)
- Volatility
- Polarity
- Water solubility
- Ionic character
- Reactivity
- Thermal stability
- Chemical composition.

Obviously the properties of concern are those of the compounds in the form delivered to the laboratory (e.g., derivatives of reactive compounds, trapped on solid adsorbents, etc.).

One of the most important properties governing the selection of analytical methods is volatility. Sample preparation procedures, wherein the analytes of interest are delivered from the sample matrix into a form suitable for analysis, generally involve either solvent extraction/concentration or thermal desorption/cold trapping approaches. Highly volatile compounds (e.g., boiling points below 100 C) cannot be readily analyzed by solvent extraction/concentration approaches because of losses during the concentration process and interference from the solvent on the analytical system. On the other hand, compounds with boiling points above 250 C usually are not candidates for the thermal desorption approach.

Volatility, polarity, and thermal stability must also be considered in the selection of determinative techniques since GC procedures are not suitable for nonvolatile, highly polar, or thermally labile compounds unless special precautions are taken. Generally polarity and thermal stability are limiting factors for GC determination of organic compounds in ambient air since these compounds tend to be sufficiently volatile (i.e., boiling point less than 400 C).

Ionic character, water solubility, and reactivity are primarily of concern during sample preparation procedures involving liquid extraction or adsorption chromatography as well as for determinative procedures such as high performance liquid chromatography (HPLC). Ionizable compounds (acids or bases) require careful control of pH when aqueous systems are employed.

Generally ionizable compounds are converted to the nonionized form during processing by adjusting the pH two to three units below the pKa for acidic compounds and two to three units above the pKb for basic compounds. Highly reactive compounds may present problems in the sample preparation procedure through reaction with solvents or adsorption chromatography supports. Phosgene, for example, reacts readily with water and hence water must be carefully excluded from the sample preparation scheme.

Chemical composition is important in the selection of determinative techniques. Whenever possible a detection system selective for the compound class should be used. Suitable selective detection systems for GC analysis are available for halogen, nitrogen, sulfur and phosphorous containing compounds. HPLC analysis is appropriate if UV absorbing (usually aromatic), fluorescent or electrochemically active (e.g., phenol, aromatic amines) functional groups are present in the molecule.

The chemical and physical properties of major compounds (other than those of interest) present in the sample should be considered, since these compounds represent potential interferences. Whenever possible the analytical and sampling techniques should take advantage of differences in properties between compounds of interest and other compounds to minimize interference in the methods.

Field Screening Techniques

The term "screening technique" can imply different approaches to different people and therefore an introductory definition is necessary. Within this document "field screening techniques" will refer to techniques which can be accomplished rapidly in the field with relatively inexpensive instrumentation. This definition excludes sampling and analysis approaches which involve conventional sampling techniques and subsequent application of group specific methods in the laboratory (e.g., EPA Level 1 methodology). This definition also excludes devices such as mobile mass spectrometers (MS) and triple quadruple MS/MS systems because these systems are relatively expensive.

This limited definition of screening technique should not be viewed as an implication that the sampling and analysis approaches excluded are not useful. Indeed, many circumstances will arise where such techniques are extremely useful and should be employed in preference to (or in addition to) the screening techniques described in this document. The purpose in limiting the definition of "screening technique" in this way is to present the reader with a discussion of alternative approaches which can be used to rapidly evaluate whether or not hazardous organic compounds are present at a particular site. This evaluation should be accomplished rapidly (e.g., field operable) and with a minimum of expense (since a multitude of sites may need to be investigated). Such techniques need not be selective for a particular compound but should be capable of distinguishing organic components typically found in uncontaminated air (e.g., methane) from hazardous substances (e.g., chlorinated and aromatic hydrocarbons). If possible, the technique should indicate the class of organic compound present so that subsequent detailed investigations of a site can be directed toward a limited set of target compounds, thereby minimizing the cost and time associated with these detailed investigations.

For the purpose of this document the available screening approaches can be broadly subdivided into the following four categories:

- Colorimetric methods
- Spectroscopic devices
- Ionization devices (with or without gas chromatographic separation)
- Photometric devices (with or without gas chromatographic separation).

Table 8 presents a listing of some typical commercially available devices useful as screening techniques. This listing is certainly not complete and is simply intended to present the reader with an overview of the specifications for such instruments. One must be aware that most of these devices have been designed to meet monitoring needs of the industrial hygiene community, where part per million levels are usually of concern. Consequently, if one must detect part per billion levels in ambient air, many of these devices will not be sufficiently sensitive.

In the following sections the operating principles, advantages and limitations of the various screening approaches are discussed.

TABLE 8. TYPICAL COMMERCIALLY AVAILABLE SCREENING TECHNIQUES FOR ORGANICS IN AIR

Technique	Manufacturer	Compounds Detected	Approximate Detection Limit	Comments
Gas Detection Tubes	Draeger Matheson (Kitagawa)	Various organics and inorganics	0.1 to 1 ppmv	Sensitivity and selectivity highly dependent on component of interest
Continuous Flow Colorimeter	CEA Instruments, Inc.	Acrylonitrile, Formaldehyde, Phosgene, and various organics	0.05 to 0.5 ppmv	Sensitivity and selectivity similar to detector tubes
Colorimetric Tape Monitor	MDA Scientific	Toluene, diisocyanate, dinitrotoluene, phosgene, and various inorganics	0.05-0.5 ppmv	Same as above
Infrared Analysis	Foxboro/Wilkes	Most organics	1-10 ppmv	Some inorganic gases (H_2O, CO) will be detected and therefore are potential interferences
FID (Total Hydrocarbon Analyzer)	Beckman MSA, Inc. AID, Inc.	Most organics	0.5 ppmvC	Responds uniformly to most organic compounds on a carbon basis
GC/FID (portable)	Foxboro/Century AID, Inc.	Same as above except that polar compounds may not elute from the column	0.5 ppmvC	Qualitative as well as quantitative information obtained

TABLE 8. (Continued)

Technique	Manufacturer	Compounds Detected	Approximate Detection Limit	Comments
PID and GC/PID (portable)	HNU, Inc. AID, Inc. Photovac, Inc.	Most organic compounds can be detected with the exception of methane	0.1 to 100 ppbv	Selectivity can be adjusted by selection of lamp energy. Aromatics most readily detected
GC/ECD (portable)	AID, Inc.	Halogenated and nitro substituted compounds	0.1 to 100 ppbv	Response varies widely from compound to compound
GC/FPD (portable)	AID, Inc.	Sulfur or phosphorus-containing compounds	10-100 ppbv	Both inorganic and organic sulfur or phosphorus compounds will be detected
Chemiluminescent Nitrogen Detector	Antek, Inc.	Nitrogen-containing compounds	0.1 ppmv(as N)	Inorganic nitrogen compounds will interfere

Colorimetric Detection--

Colorimetric devices involve drawing an air sample through an adsorbent or solution containing a reagent which reacts with the compounds(s) of interest to yield a colored material. The specificity of such methods is highly dependent on the compound being monitored and one must always be cognizant of the fact that some airborne components may create negative or positive interferences in the method. Humidity, temperature, and sample flow rate can affect the results obtained, and consequently these variables must be known and carefully controlled whenever possible.

The most common type of colorimetric device available for air monitoring is the gas detection tube (e.g., Draeger or Kitagawa tubes). Tubes of this type are available for long-term (e.g., 8-hour worker exposure) or short-term (e.g., 5-10-minute grab sample) collection. The tubes consist of an adsorbent such as silicagel impregnated with a color developing reagent. When contaminated air is drawn through the tube at the specific rate and sampling time, the length of the stain (color) developed will be proportional to the concentration of the contaminant.

At present, gas detection tubes are available for the determination of approximately 40 different organic components commonly found in the workplace. The sensitivity and selectivity of the various tubes are highly dependent on the compound of interest. Consequently the user must carefully review the performance specifications in terms of interferences and should understand the chemical reaction occurring in the detection process before assuming a particular gas detection tube is suitable for a particular monitoring effort.

Detection limits for organic compounds using the detector tube are generally 0.1 ppmv or higher and often will not be adequate for monitoring ambient levels of the compounds. However, this level of sensitivity may be sufficient for monitoring air in the vicinity of hazardous waste dumpsites and similar sources.

Colorimetric devices other than gas detection tubes are available. One such device (available from CEA Instruments Incorporated) uses an integrated liquid pumping system to trap the component of interest, react it with a color developing reagent, and measure the absorbance continuously. This device, while suffering from the same sensitivity and selectivity limitations as the detector tube, offers a continuous monitoring capability which can be useful for rapidly surveying an area for sources of contamination. Currently, this device can detect formaldehyde, acrylonitrile, and a variety of inorganic species with detection limits on the order of 0.05 to 0.5 ppmv. However, this basic system could conceivably be applicable to many more compounds using alternate color developing reagents.

Another colorimetric approach involves impregnating a continuous paper tape reel with a color reagent and passing air through the tape. The tape is slowly driven from the air sampling region to an optical detector which measures the absorbancy at a specified wavelength. Devices of this type are available from Universal Environmental Instruments and MDA Scientific, Inc. Currently, devices for the detection of isocyanates, dinitrotoluene, phosgene, and a variety of inorganic species are available. Detection limits of a few ppbv are achievable for selected compounds (e.g., toluene diisocyanate), although the detection limits and selectivity of this approach are generally similar to the other colorimetric approaches. Nevertheless, this approach can be used for area monitoring on a continuous basis to observe temporal changes in concentration of selected components.

Spectroscopic Devices--

Although a wide variety of spectroscopic techniques (e.g., infrared spectroscopy (IR), ultraviolet absorption (UV), fluorescence) could potentially be applied to air monitoring, only infrared (IR) monitoring has been employed to a significant extent. UV spectroscopy is too nonspecific to be of any real value and fluorescence detection is applicable only to a few selected compounds, although either of these techniques could be useful in selected cases.

IR has the advantage that virtually all organic compounds can be detected and give characteristic spectra. Hence, both selectivity and a wide range of applicability are achievable with this approach. Major limitations of the IR approach are (1) many inorganic gases (e.g., water, CO, NO) are also detected at certain wavelengths, and (2) IR absorbance is not as strong as UV absorbance, hence giving rise to poor detection limits (1-10 ppmv). The latter limitation is minimized by employing long, folded-path optical cells (20 meters). Microcomputer control of commercial IR screening devices has partially overcome the first limitation by allowing automated correction for interferences. A complete line of portable IR devices is available from Foxboro Analytical (Wilkes Division). Analytical parameters (reference and analysis filter wavelength) for monitoring approximately 100 organic compounds are available.

Ionization Devices--

Ionization techniques operate on the principle of subjecting the analyte to a high energy source with subsequent detection of the ionized species by collection at an appropriately polarized electrode. The most widely used techniques of this type are (a) flame ionization detection (FID), (b) photoionization detection (PID), and (c) electron capture detection (ECD). Each of these techniques can be used in a "stand-alone" mode or can be coupled with a gas chromatograph to provide greater specificity.

Flame Ionization Detection--By far the most widely used device in the category is the FID, wherein the gas sample is introduced into a hydrogen/air flame. The technique is specific for organic compounds and gives relatively uniform response for the various compounds. Consequently, this device serves as a basis for most of the commercially available "total hydrocarbon" and "nonmethane hydrocarbon" analyzers. The detection limits for such devices typically are about 0.5 ppmv (as carbon).

In addition to the commercially available total hydrocarbon monitors (e.g., Beckman Instruments, Mine Safety Appliance, Inc.), several portable GC/FID systems are available (e.g., Foxboro/Century, Analytical Instrument Development). These GC/FID systems provide qualitative, as well as quantitative data in the field -- an invaluable feature in many cases. In particular, the GC/FID systems separate methane and many other ubiquitous organic compounds from the more hazardous compounds, thus allowing more sensitive and selective determination of the compounds of interest.

In addition, some of these GC systems (in particular the Analytical Instrument Development device) can utilize alternate detectors (e.g., flame photometric, ECD) to provide even greater qualitative information, as well as better sensitivity for selected groups of compounds.

Photoionization Detection--Photoionization detection (PID) involves subjecting the gas phase compounds to a high-intensity beam of UV radiation of a particular energy. Absorption of the radiation by a gas molecule leads to formation of a positive ion and free electron, provided the ionization potential for the compound is less than the radiation

energy. The ion is collected at an electrode and the resultant current (proportional to analyte concentration) is monitored.

Since the ionization potential of a particular compound must be less than the radiation energy, compounds having high ionization potentials will be less easily detected than those of lower ionization potential. Consequently, the choice of lamp energy will have a profound effect on detector specificity. This aspect of PID detection is attractive from the standpoint that using a higher energy lamp will provide a relatively nonselective, highly sensitive detector; whereas, a lower energy lamp will yield a selective detector which can sensitively detect certain readily ionized compounds (e.g., aromatic hydrocarbons) but will not detect aliphatic hydrocarbons.

Several PID devices are commercially available (e.g., HNU, Analytical Instrument Development, Photovac). A variety of lamp energies are available ranging from 9.5 to 11.7 eV. In general, the ionization potential for important groups of organic compounds increases in the order: aromatics <olefins <halogenated hydrocarbons <aliphatic hydrocarbons. Consequently, aromatics can be selectively detected in the presence of halogenated alkanes, for example, using a low-energy lamp (e.g., 9.5 eV); whereas, both compound classes can be detected with an 11 eV lamp. An important advantage of the PID system is that methane is not detected using any of the available lamps and, hence, does not interfere.

The sensitivity of PID is considerably better than FID in most cases (100 ppbv or better). In particular, the PID available from Photovac has sub-ppbv sensitivity for many compounds. This device uses a unique electrodeless discharge lamp which appears to yield more sensitive and stable response than the conventional lamp.

Several manufacturers produce GC/PID systems (e.g., Photovac, HNU, and Analytical Instrument Development) which are field portable. These devices have advantages similar to the GC/FID system, in that qualitative as well as quantitative data are obtained. However, while the PID system is generally more sensitive than FID, the PID system does not give uniform response from compound to compound. Hence, the system must be calibrated for each specific analyte in order to yield quantitative data.

Electron Capture Detection (ECD)--The ECD technique involves exposing the gas sample to a source of electrons (usually from a ^{63}Ni foil). The intensity of the electron beam arriving at a collection electrode is monitored. When an electron-capturing species (e.g., nitrated or halogenated organic compound) passes through the cell, the intensity of the electron beam decreases, giving rise to a signal.

The ECD technique is highly sensitive and selective for compounds containing electron withdrawing groups such a halogen or nitro functions (although monohalogen compounds give rather poor response). Unfortunately, the ECD response varies widely from compound to compound, and therefore each analyte requires specific calibration to obtain quantitative data.

In principle, the ECD could serve as a stand-alone detector as for FID and PID. However, in practice the detector is sensitive to inorganic gases and other airborne components, and, hence, can only be used in a controlled gas stream (i.e., as a GC detector with a purified nitrogen or argon/methane carrier gas). At least one portable GC/ECD system is available (from Analytical Instrument Development). This type of device offers a highly sensitive and selective means of detecting halogenated organics and nitro-substituted compounds.

Photometric Devices—

Photometric techniques involve monitoring radiant energy emitted by a species which is subjected to physical or chemical excitation processes. The two most common techniques in this category are flame photometric detection (FPD) and chemiluminescence.

Flame Photometric Detection (FPD)--The FPD uses a hydrogen/air flame to decompose the compound and excite certain elements. The light emitted by certain elements (e.g., sulfur and phosphorus) is monitored. The element to be monitored is selected by placing an appropriate optical filter in front of the photomultiplier tube to allow only light of the particular wavelength to be detected. While several elements could be monitored by this approach, only sulfur and phosphorus compounds (separately) are generally analyzed.

The FPD is used as a total sulfur or phosphorus detector in a stand-alone mode (similar to FID for total hydrocarbons). However, inorganic as well as organic species will be detected and common inorganic gases, such as SO_2, will interfere with organic analysis. Consequently, use of GC/FPD is advantageous for monitoring sulfur or phosphorus-containing organics. Such a GC/FPD system is available for field use (from Analytical Instrument Development). Detection limits on the order of 10 to 100 ppbv (as S or P) are achievable in many cases.

Chemiluminescence--Chemiluminescence detection involves the measurement of light emitted from a compound which has been activated by a chemical process. The only chemiluminescent process to be discussed here is the detection of nitrogen compounds by conversion of the compound to NO and subsequent reaction with ozone. The chemical reactions involved are as follows:

$$R - N + O_2 \xrightarrow{\text{(pyrolysis)}} CO_2 + H_2O + NO$$
$$NO + O_3 \longrightarrow NO_2^* + O_2$$
$$NO_2^* \longrightarrow NO_2 + \text{light}$$

While this approach is highly selective for nitrogen, it does not distinguish between inorganic and organic nitrogen and, hence, cannot be used to detect trace quantities of organic nitrogen compounds in air. As yet, no commercially available systems involving GC preseparation are available. In order to use this technique for determining trace organic nitrogen compounds in air, a method for removing the NO_x and other inorganic nitrogen compounds must be found.

Summary--

While a large number of screening devices and techniques are available, as described in this document, one must carefully evaluate the sensitivity, selectivity, and types of interferences of these techniques before deciding whether or not they are suitable for use in a particular monitoring situation. Many of the available techniques are designed for workplace monitoring where the levels of interest are greater and the environment is better known and controlled than is generally the case for ambient air monitoring.

In many cases none of the available screening techniques will be suitable to accomplish a given monitoring objective, and, hence, a more sophisticated analytical approach will be required. In selected cases the existing screening devices may be suitable if some means of sample preconcentration or cleanup is employed. However, extensive sample workup in the field is generally cumbersome and probably offers little advantage over conventional laboratory analysis of the sample.

The ionization devices (particularly FID and PID) probably are the most generally useful in terms of sensitivity for ambient air monitoring, although colorimetric methods can be quite good in favorable cases. A further advantage of the ionization and FPD approaches is the availability of these techniques in combination with gas chromatography which extends the qualitative as well as quantitative capabilities of the techniques. The IR spectroscopic approach can give useful qualitative information not available for the other techniques but will not be useful for monitoring ambient levels of many trace components because of spectral overlap from major organic and inorganic components. The lack of a suitable GC/IR for field use is a further limitation of this approach.

Laboratory Screening (Compound Class) Techniques

The techniques discussed in this section give primarily compound class information, rather than data for specific compounds. Many techniques discussed in the last section fit this description, although the current discussion will center on techniques primarily designed for laboratory rather than field use.

Techniques in this category include the following:

- Colorimetric techniques
- Infrared spectroscopy
- Fluorescence spectroscopy
- Low resolution mass spectrometry.

These techniques can be used to obtain compound class information as well as to determine concentrations of specific compounds. Consequently compound specific methods based on these techniques are presented later in the TAD to avoid confusion.

Colorimetric Techniques--

Table 9 provides information concerning colorimetric techniques useful for monitoring toxic organic compound classes. Relatively few compound class methods for ambient air have been developed in the last few years because of the advances in chromatographic procedures and the intense interest in determining specific organic compounds. However, colorimetric detection principles exist for many organic compounds and ambient air monitoring techniques based on these principles could be developed if a particular need arose.

Most colorimetric techniques involve collection of the compound(s) of interest in an impinger with subsequent formation of a colored derivative, in either the field or laboratory. The content of the impinger solution should be chosen to (a) stabilize the analytes during collection and transport, and (b) selectively capture the analytes of interest, allowing potential interferences to pass through.

Infrared Spectroscopy (IR)--

IR is widely used as a screening tool for determining organic compound classes from source emissions in the EPA Level 1 protocol[24]. However, this approach is generally less sensitive than available colorimetric approaches and will be of value in ambient air monitoring only when high (ppm) levels of semivolatile or nonvolatile compounds are present.

The Level 1 IR approach cannot be used for volatile compounds (boiling point 100 C) because of the need for solvent extraction. Gas phase IR approaches such as those

TABLE 9. COLORIMETRIC SCREENING TECHNIQUES FOR DETERMINING CLASSES OF ORGANIC COMPOUNDS

Analyte	Detection Principle	Detection Limit	Reference	Comments
Aldehydes	Reaction with 3-methyl-2-benzothiazolone hydrazone (MPTH). Further reaction with ferric chloride-sulfamic acid to form an azo dye. Colorimetric detection at 628 nm.	0.03 ppmv (25 liter sample)	(4)	
Mercaptans	Mercaptans trapped with aqueous mercuric acetate-acetic acid solution. Determined colorimetrically at 500 nm after reaction with N,N-dimethyl-p-phenylenediamine.	0.002 ppmv (25 liter sample)	(4)	H_2S will give a slight response. (200 fold lower)
Phenols	Phenols are captured in an alkaline solution, then reacted with 4-aminoantipyrine. Colorimetric determination at 400 nm.	0.001 ppmv (1 m^3 sample)	(4)	Phenols with substituents at the 4-(p-) position will not be detected.
Amines (primary and secondary)	Amines are trapped in acidified isopropanol solution & subsequently reacted with ninhydrin. Colorimetric determination at 575 nm.	0.1 ppmv (25 liter sample)	(4)	
Polynuclear Aromatic Hydrocarbons (PAH)	PAH are collected on "Hi-Vol" filter & extracted with benzene. Benzene extract is evaporated to dryness & partitioned by alumina chromotography. PAH are determined colorimetrically.	10 ng/m^3	(2) NIOSH Method 184	Fractions from aluminia column are analyzed to obtain individual PAH values or combined to indicate total PAH content.

described for field screening could be employed in the laboratory but the problems associated with sample transport make this approach less attractive. Long path IR approaches for determining specific organic compounds are discussed later in the TAD.

Low Resolution Mass Spectrometry (LRMS)--

LRMS is a second technique used in the EPA Level 1 protocol[24]. This approach suffers the same limitations as IR, when applied to ambient air monitoring. While the LRMS approach is somewhat more sensitive than IR, the data obtained are more difficult to interpret and the instrumentation required is more expensive. Consequently, this approach is of little value for ambient air monitoring.

Fluorescence Spectroscopy--

Fluorescence is a relatively inexpensive and highly sensitive technique useful for determining selected classes of organic compounds. The principles of fluorescence spectroscopy, as applied to air monitoring are discussed in Katz' book[25]. Polynuclear aromatic hydrocarbons (PAH), aromatic amines, and phenols are the primary classes of organic compounds in ambient air which can be determined using fluorescence spectroscopy.

A practical limitation of fluorescence spectroscopy is the quenching phenomenon, wherein large quantities of UV absorbing material will reduce the fluorescence response. Consequently, large quantities of UV absorbing material must be removed from the sample extract (e.g., by adsorption chromatography) before a fluorescence determination can be made. A second limitation is the wide variability in fluorescence response from compound to compound, even within a given class. This limitation makes development of a quantitative fluorescence method for compound classes difficult. As a result of these two limitations most available fluorescence methods involve chromatographic isolation of a particular compound prior to its determination. Methods of this type are discussed later in the TAD.

Compound Specific Techniques

A listing of the techniques available for determining specific organic compounds is given below:

- Gas chromatography (GC)
- Gas chromatography-mass spectrometry (GC-MS)
- High performance liquid chromatography (HPLC)
- Thin layer chromatography (TLC)
- Column chromatography
- Infrared spectroscopy (IR)
- Ultraviolet or visible absorption (UV-VIS)
- Fluorescence spectroscopy.

The operating principles as well as advantages and limitations of the various techniques are discussed below.

Gas Chromatography (GC)--

GC is by far the most widely employed technique in ambient air monitoring of toxic organic compounds. The sensitivity, specificity, and versatility of GC, coupled with the relatively volatile nature of most compounds in ambient air, make this a very attractive technique.

The principles of GC are described in Katz' book[26]. The discussion given below is designed to present those aspects of GC operation important to ambient air analysis. One should consult the above reference or chromatography text books for more detailed information. Although the operation of GC is rather simple, many practical problems can arise which are avoided or corrected only by experienced operators. Consequently the availability of such personnel is essential to the success of a monitoring program. Obviously, this statement applies to other instrumental analysis techniques as well.

Basically GC is a separation technique wherein components of a sample are separated by differential distribution between a gaseous mobile phase (usually helium, nitrogen, or hydrogen carrier gas) and a solid or liquid stationary phase held in a glass or metal column. Sample is injected into the carrier gas as a sharp plug and individual components are detected as they elute from the column at characteristic "retention times" after injection. Both column temperature and carrier gas flow must be carefully controlled to obtain uniform response and retention time characteristics. The basic components of a gas chromatograph are the following:

- Gas flow system
- Injector system
- Stationary phase (column)
- Oven and associated temperature controller
- Detector
- Data recording device.

Only columns, detectors, and injectors will be discussed in detail in the TAD. A typical arrangement for the various GC components is shown in Figure 7.

Columns--In order to understand the requirements for the various GC components, one must recognize that two different types of GC columns (illustrated in Figure 8) are widely used. The conventional type of GC column is termed a packed column and consists of a solid support coated with a liquid stationary phase (gas/liquid chromatograph) or simply a solid adsorbent (gas/solid chromatography). The second type of column is a wall-coated open tubular (WCOT) or capillary column and has been widely adopted for environmental analysis because of its superior resolution and broader applicability, compared to packed column GC. As shown in Figure 8, the capillary column consists of a liquid stationary phase coated or bonded to the specially treated glass or fused silica tubing. Fused silica tubing is most commonly used because of its physical durability. Bonded (or crosslinked) columns are used in preference to coated columns because of the greater operating temperatures which can be obtained. Columns of this type are available from various suppliers, including Hewlett-Packard and J & W Scientific. The principles and applications of capillary column GC are discussed in the literature[31,32].

The typical linear flow velocity through both capillary and packed columnns is about 30 cm/sec. However, the much narrower cross sectional area of the capillary column translates to a volumetric flow rate of 1-2 cm^3/minute versus 30-50 cm^3/minute for packed column. Th much lower flow rate of the capillary column requires (a) that dead volume in the injector and detector be minimized and (b) that the effective sample injection volume be reduced. These requirements have been fulfilled satisfactorily in most modern GC instruments through the use of low volume detector cells and split/splitless type injection systems. Consequently, modification of older packed column instruments for capillary column operation is not recommended unless no alternative is available.

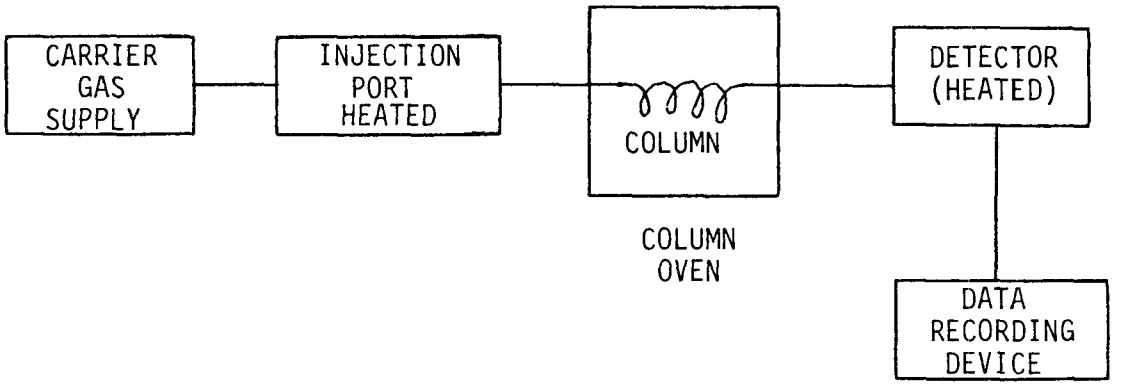

Figure 7. Block diagram of a typical gas chromatograph

PACKED

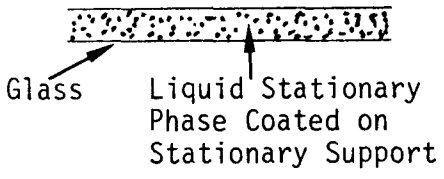

Typical Dimensions

6mm O.D. x 2mm I.D. x 1.8m

CAPILLARY

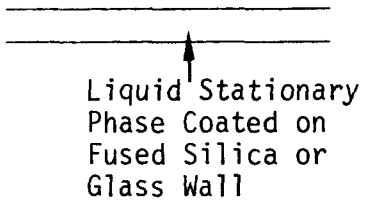

Typical Dimensions

0.50mm O.D. x 0.22mm I.D. x 50m

Figure 8. Capillary and packed gas chromatographic columns

Table 10 lists the most commonly employed packed and capillary columns and their respective applications. While capillary column GC is superior for most situations, highly volatile compounds (boiling points<50 C) are best determined on various packed columns capable of retaining such compounds at ambient temperature.

Detectors--The GC detection system chosen will determine, to a large extent, the specificity and sensitivity of an analytical method. Consequently one should carefully review the program requirements when selecting a detection system for use in a given study. Table 11 provides an overview of the characteristics of available detection systems and Figure 9 graphically illustrates the approximate sensitivity range for various GC detectors. The principles of operation for many of the detectors are briefly described in the section on field monitoring techniques.

By far the most widely used GC detector is the flame ionization detector (FID) which provides good sensitivity and uniform response for a wide variety of compounds. The uniformity in response of the FID allows fairly accurate quantification of compounds for which specific response factors have not been determined. This is probably the most advantageous feature of the FID and is useful for ambient air monitoring studies in which the complete range of compounds present cannot be anticipated. None of the other detectors give nearly as uniform a response as FID.

The electron capture (ECD) and photoionization (PID) detectors are becoming more widely used in ambient air monitoring because of their greater sensitivity, compared to FID. PID is widely viewed as a substitute for FID, although its response varies considerably from compound to compound. PID is particularly useful for monitoring aromatic compounds. ECD is selective for electron deficient materials, especially polyhalogenated and nitrosubstituted compounds. In favorable cases, picogram (10^{-12} g) levels can be detected, but response varies widely from one compound to the next. Several literature references are available which describe the detection sensitivities of various compounds on ECD and PID[61-63].

The flame photometric (FPD) detector is specific for either phosphorus or sulfur compounds, depending on the optical filter employed and gives sensitivity comparable to the FID. The response obtained is logarithmically related to the amount of sulfur or phosphorus injected (log sulfur amount = response). This detector is of particular advantage when trace levels of phosphorus or sulfur compounds are to be detected in the presence of much greater quantities of aliphatic hydrocarbons.

The alkali flame (AFD), thermionic specific (TSD), or nitrogen-phosphorus (NPD) detector is selective for nitrogen and phosphorus compounds and is considerably more sensitive than either FPD or FID. However, response varies considerably from compound to compound. This detector is preferred over FPD for determining phosphorus compounds in many cases because of its greater sensitivity.

The Hall electrolytic conductivity detector (HECD) can be operated in either the halogen, sulfur, or nitrogen specific modes, although the halogen specific mode is the most widely employed. This system gives poorer sensitivity than ECD for polyhalogenated compounds, but better response for monohalogenated compounds, such as vinyl chloride, since the HECD response is proportional to the amount of halogen injected. Correspondingly, the HECD gives a more uniform response for polyhalogenated compounds than ECD. An additional advantage of HECD is its temperature stability which allows temperature programming (ECD drifts considerably under temperature programmed conditions).

TABLE 10. COMMONLY USED GC STATIONARY PHASES

	Applications
Liquid Phases	
SE-30, OV-1 (Methyl Silicones)	Hydrocarbons, Chlorinated Hydrocarbons
OV-17, SE-54 (Methyl/Phenyl Silicones)	PAHs, Chlorinated Pesticides, Hydrocarbons
Carbonax 20M (Polyethylene Glycol)	Polar Compounds; Esters, Alcohols, etc.
FFAP, SP-1000 (Polyethylene Glycol Terephthalate)	Phenols, Volatile Acids
Solid Phases (Packed Column Only)	
Chromosorb, Porapak Series (Styrene/Divinylbenzene Polymers)	Volatile Alcohols, Ketones, Hydrocarbons, and Halocarbons. (B.P. 30 to 100 C)
Carbon Molecular Sieves (Carbosphere, Spherocarb, Carbosieve)	C_1-C_5 Hydrocarbons
Porous Silica (Unibeads, Porasil A)	C_1-C_5 Hydrocarbons

TABLE 11. COMMON GC DETECTORS

Detector	Compounds Detected	Advantages	Limitations
Flame Ionization (FID)	Organics	Response is relative constant from one compound to another.	Not as sensitive as many of the other detectors.
Photoionization (PID)	Most organics except methane	Response selectivity can be varied by choice of lamp energy.	Response varies from compound to compound. Less rugged than FID.
Electron Capture (ECD)	Polyhalogenated and nitro compounds	Highly sensitive and selective.	Subject to contamination. Response varies widely from compound to compound. Response drifts during temperature programming.
Alkali Flame (NPD or AFD)	Nitrogen and phosphorus compounds	Highly sensitive and selective.	Subject to contamination. Response varies more from day to day than for FID or ECD.
Flame Photometric Detector (FPD)	Sulfur or phosphorus compounds (separately)	Highly selective.	Response varies from day to day. Not as sensitive as NPD for phosphorus compounds.
Hall Electrolytic Conductivity (HECD)	Halogen, sulfur, or nitrogen compounds (separately).	Highly selective. Response relatively constant from compound to compound. Stable baseline during temperature programming.	Only halogen mode has been employed extensively. Requires considerable operator attention. Not as sensitive as ECD for polyhalogenated compounds (e.g., PCBs).
Thermal Energy Analyzer (TEA)	Nitrosamines	Highly sensitive and selective.	Very expensive. (~$35K)

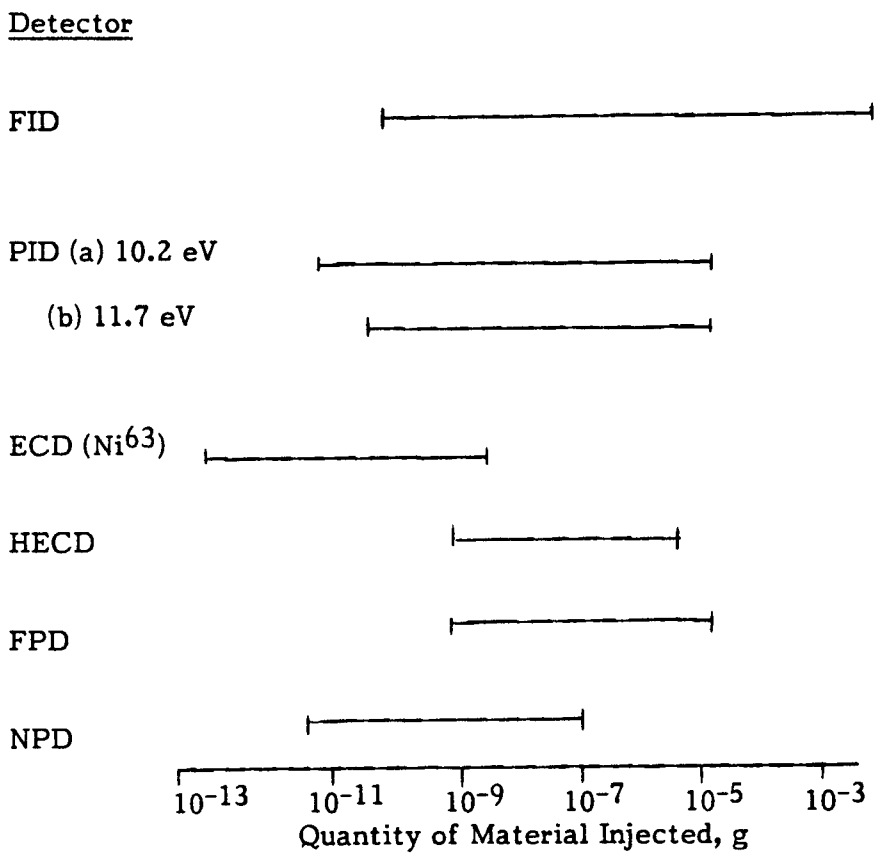

Figure 9. Approximate Gas Chromatographic Detector Ranges

HECD is not widely used in air monitoring programs because the greater sensitivity of ECD is highly desirable and tends to outweigh other considerations.

A continuing challenge in GC analysis of organic compounds in ambient air is the qualitative identification of components detected by the various detection systems. Use of mass spectrometry as a GC detector (GC-MS) is a highly effective tool in this regard, as discussed later in this section. However, GC-MS is a very expensive instrument and is not always available. Attractive alternatives to GC-MS include analyzing samples twice using dissimilar columns or using dual (parallel or series) detectors. The latter approach is most attractive since only a single injection of sample is required and retention times can be accurately matched from the two outputs. If series detectors are employed, the first detector must be sealed, nondestructive towards the sample, and have a low dead volume to reduce peak broadening. On the other hand, parallel detector operation requires a precise stream splitter. Such a system has been described for simultaneous FID/PID detection using capillary columns GC[61].

Some detector combinations found to be most useful in terms qualitative information are listed in Table 12. Note that each detector combination contains one selective (ECD, HCD, or NPD) and one relatively nonselective (PID or FID) detector. This approach allows the selective and sensitive detection of compounds of special interest as well as the detection of any large, unanticipated components. The ratio of response for a given peak on the two detectors helps confirm its identity.

Injection Systems--Injection systems are of particular importance in GC analysis of ambient air, because of the wide range of forms in which the sample may be collected. The primary injection modes, based on the manner of sample collection include:

- Liquid injection (particulate or resin extract)
- Whole air injection (syringe or valve)
- Thermal desorption (e.g., of Tenax)
- Cryogenic trapping of whole air sample.

Liquid and whole air injections are relatively straightforward and employ conventional techniques. In the case of capillary column GC a well designed splitless injector is required in order to obtain optimal resolution and prevent solvent tailing. Generally the capillary column temperature is maintained well below the elution temperature of the analyte in order to reduce peak broadening.

Thermal desorption of resin samples involves (a) heating the resin cartridge to suitable temperature in an inert gas stream, (b) passing the inert gas stream through a cryogenically cooled trap to condense the desorbed analytes, and (c) flash evaporating the analytes onto a GC column held at low temperature to "focus" the materials at the head of the column. This injection process is used for Tenax desorption work, using a semi-automatic device available from Nutech, Inc. (Durham, N.C.) and has been described in the literature[27].

The whole air cryogenic sampling procedure is similar to the process described above except that thermal desorption of the resin is omitted. As described in the literature[17] a 30-500 ml volume of air is passed through a cryogenically cooled trap (liquid argon) and the condensed material is flash evaporated onto a GC column held at low temperature (e.g., -50 C). In both cases, the desorbed components are separated by temperature programing the GC column.

Table 12. Useful Dual GC Detector Combinations

Detector Combination	Application	Reference
ECD-PID (Series)	Volatile Aromatics and Chlorinated Solvents	Unpublished data
PID-FID (Series)	Aromatic Hydrocarbons	61
ECD-FID (Series)	Chlorinated Hydorcarbons	67
PID-HECD (Series)	Aromatic and Halogenated Volatile Compounds	Unpublished data
NPD-FID (Parallel)	Nitrogen or Phosphorous Compounds	65, 69
FPD-FID (Parallel)	Sulfur Compounds	65
PID-NPD (Series)	Amines	66
HECD-FID (Parallel)	Hydrocarbons and Halogenated Hydrocarbons	64, 68

Both the resin and cryogenic thermal desorption approaches require the use of non-adsorptive stainless steel or teflon valves and fittings capable of withstanding the extreme operating temperatures without leaking or contaminating the system. Capillary columns should be directly coupled to the injection valve using teflon and stainless steel fittings, as opposed to using conventional splitless injectors.

Gas Chromatography-Mass Spectrometry (GC-MS)--

In principle GC-MS can be viewed as another detection mode for gas chromatography. However, in practice GC-MS is a highly sophisticated and powerful technique requiring more specialized skills and detailed knowledge than for other forms of GC. A detailed discussion of GC-MS theory and practice is beyond the scope of this document. A comprehensive discussion of GC-MS is available in textbook form[28], although this reference does not discuss the most recent advances in the rapidly expanding field of capillary column GC/MS.

Instrumentation--A diagram of a typical GC-MS system is shown in Figure 10. In addition to the GC system the major components include:

- Interface (between GC column and MS ion source)
- Ion source
- Mass analyzer
- Vacuum system(s)
- Data acquisition and instrument control system.

Mass spectrometric analysis involves the following sequential processes:

(a) Ionization of the sample introduced into the ion source
(b) Acceleration of the ions from the ion source into the mass analyzer region
(c) Separation of the ions in the mass analyzer region on the basis of the mass to charge (m/e) ratio
(d) Detection of the ions at each mass.

In order to minimize ion-molecule reactions and interference from air the ion source, mass analyzer, and ion detector must be maintained at low pressure (10^{-5} mm of Hg or less). Consequently, the high vaccum system is a critical component of the GC-MS system and air leakage through valves, fittings, and/or flanges, is a common problem in GC-MS.

Since a GC operates at ambient pressure and above, whereas the MS must be maintained at low pressure, the GC-MS interface ideally will discard excess carrier gas flow and quantitatively deliver the sample components into the ion source for subsequent determination. Since typical GC-MS systems can accept approximately 2-3 ml/minute of gas flow without significant spectral distortion (due to elevated pressure in the MS system) the use of capillary column GC allows the entire column effluent to be delivered to the ion source. If fused silica columns are used, the column can actually be placed directly into the entrance of the ion source. However, packed column GC-MS operation, in which column flow rates of 30-50 ml/minute are common, requires the use of membrane or jet separators which remove a large portion of the light carrier gas (usually helium) delivering the majority of the sample to the ion source.

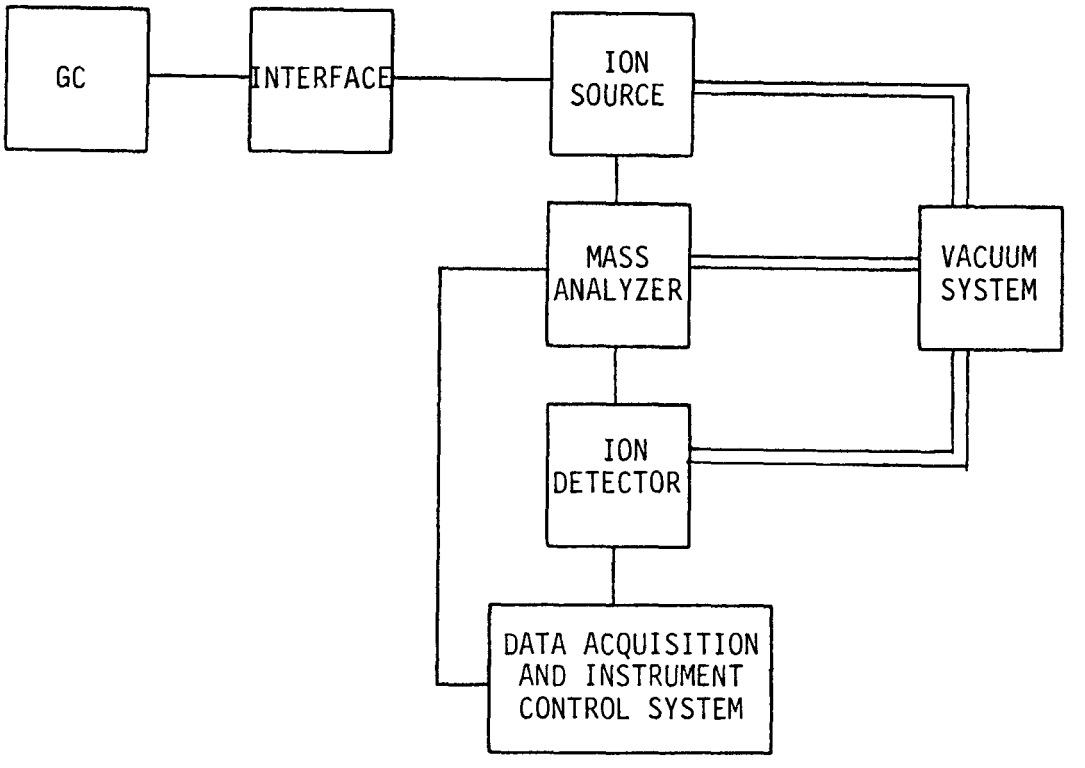

Figure 10. Block diagram of a typical GC-MS system

The avoidance of membrane and/or jet separators and associated fittings, in addition to the other inherent advantages of capillary column GC (i.e., better resolution, less irreversible adsorption) make capillary column GC-MS preferable to packed column GC-MS for most environmental applications. In fact many of the newer commercial GC-MS systems are designed primarily for capillary column operation.

Although a wide variety of powerful, specialized forms of MS ionization modes, mass analysis schemes, etc. are available, the majority of ambient air monitoring applications use electron impact (70 eV) ionization and quadruple mass analyzers. One must bear in mind that low resolution mass spectral identifications (e.g., from quadrupole mass analyses) are considered tentative and for litigation purposes high resolution spectral data may be required. A discussion of the various optional approaches is provided in the previously referenced text[28].

GC-MS analysis of complex environmental samples results in the acquisition of large amounts of data. A typical capillary column GC-MS run might result in the acquisition of 2000 mass spectra (e.g., one scan per second) over a range of 40-400 amu, representing 100-200 individual components. Obviously the acquisition and reduction of this volume of data requires the use of a laboratory computer system operating with a set of sophisticated software. Typical GC-MS systems use laboratory mini-computers with high density magnetic disks for mass storage. Archival storage of data is usually accomplished using 9-track magnetic tape, a more convenient medium than disks for long-term storage.

A new form of mass spectrometry, termed MS-MS or triple quadruple MS has recently become available and is receiving much attention[29]. This technique involves direct analysis of an atmospheric sample by (a) ionizing the sample components in an atmospheric pressure ion source, (b) separating the ions in the first quadruple mass analyzer, (c) passing an ion of one specific mass into a second quadrupule containing a collision gas such as argon, and (d) separating the product ions resulting from the ion molecule reaction in Step c using a third quadruple. The use of two mass analyzers in series introduces great selectivity into the analysis, hence eliminating the requirement for GC separation in many cases. In practice the MS-MS approach is highly sophisticated and expensive thus limiting its availability for most ambient air monitoring programs. However, in selected cases MS-MS may be the only technique capable of detecting trace levels of contamination.

Applications--The power of GC-MS analysis has resulted in a wide variety of applications, especially in the environmental area. Reviews[30] and research articles describing these applications are available throughout the scientific literature and no attempt will be made to summarize that information here.

GC-MS analysis can be used effectively for ambient air monitoring in two generalized operating modes. The first mode involves surveying collected samples to determine what compounds are present and the approximate concentrations. A typical example of this operating mode is the widely used Tenax resin collection/GC-MS analysis method for ambient air surveys[27]. This operating mode takes advantage of the powerful identification capability of GC-MS and is often used in conjunction with other GC detection schemes, wherein the sample components quantified by FID, ECD, etc. are identified by GC-MS.

A second mode of GC-MS operation involves searching a sample for trace levels of specific compound(s) and accurately quantifying this material. This operating mode

typically employs a form of GC-MS termed selected ion monitoring (SIM) or multiple ion detection (MID) wherein only a few selected ions are monitored, rather than scanning a broad mass region as in the first operating mode. The SIM approach is more sensitive and accurate than full spectrum scanning approaches.

High Performance Liquid Chromatography (HPLC)—

HPLC is a technique primarily designed for the determination of polar and nonvolatile compounds not readily determined by gas chromatography. Consequently HPLC is not widely used for ambient air monitoring, in which most compounds of interest are relatively volatile. Two specialized cases where HPLC is useful for ambient air monitoring are:

(a) Determination of nonvolatile material (e.g., PAHs) in ambient particulate material
(b) Determination of reactive components (e.g., aldehydes) by reacting the compounds with a derivatizing reagent.

The theory and application of HPLC has been described in detail in textbook form[33].

A typical configuration of an HPLC system is shown in Figure 11. The important components include:

- Pump
- Injection valve
- Column
- Detector
- Data recording device.

HPLC separation involves a process similar to that described for GC (i.e., separation of sample components on the basis of the differential distribution between mobile and stationary phases). However, GC separations are performed primarily on the basis of volatility, whereas HPLC separation mechanisms are much more varied and complex. The liquid mobile phase composition has a profound effect on component retention and a change in mobile phase composition can lead to reversal of the elution order for two components.

The most commonly employed forms of HPLC are termed (a) normal phase and (b) reversed phase chromatography. Normal phase HPLC uses a polar stationary phase (e.g., silica gel, alumina) and a relatively nonpolar mobile phase (e.g., hexane, methylene chloride) and separation is based primarily on an adsorption mechanism, with polar components eluting later than nonpolar components. Reversed phase HPLC was developed later than normal phase HPLC and uses a nonpolar (usually chemically bonded) stationary phase and polar (e.g., water, methanol, acetonitrile) mobile phase. Reversed phase HPLC separates primarily on a partition mechanism, with hydrophilic components eluting earlier than hydrophobic components.

At the present time reversed phase HPLC is more widely used than normal phase HPLC because of the greater versatility of this technique. Table 13 compares the principles and relative advantages of the two approaches.

In order to achieve rapid, efficient separation of sample components, HPLC techniques employ microparticulate packing materials, typically spherical materials of 5 μm diameter. HPLC requires a pumping system capable of delivering a precise, pulse-free

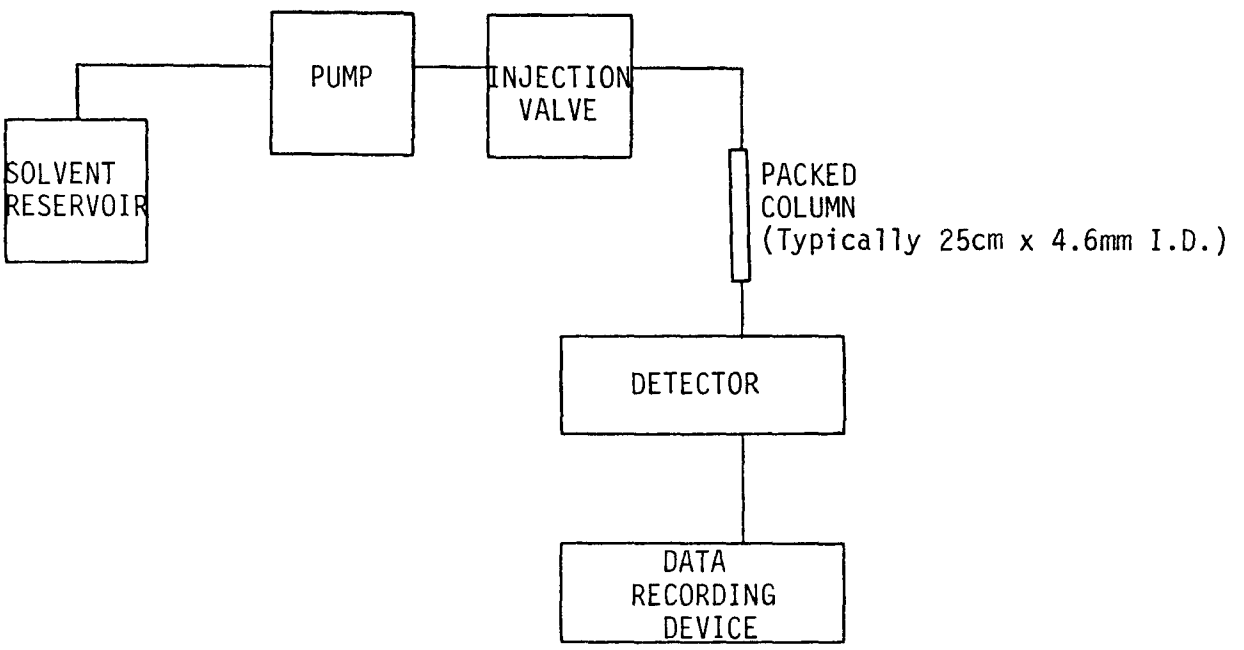

Figure 11. Typical configuration of an HPLC system

TABLE 13. COMPARISON OF REVERSED AND NORMAL PHASE HPLC

	Reversed Phase	Normal Phase
Typical Stationary Phase	C_{18} bonded to silica	Silica gel, cyanopropyl bonded to silica
Typical Mobile Phase	Water, methanol, acetonitrile	Hexane, ether, methylene chloride
Elution Order	Water soluble compounds first	Nonpolar compounds first
Advantages	Usually not deactivated by samples. Avoids problems with irreversible adsorption. Readily equilibrated during gradient elution.	Useful for water labile compounds. Can separate isomeric compounds more readily.
Typical Environmental Applications	PAHs, aromatic amines, phenols, pesticides	PAHs, nitrogen heterocycles (especially for isomer separation), pesticides

flow (e.g, 1-2 ml/minute) of mobile phase at pressures of up to 400 atmospheres. Obviously, high pressure injection valves, columns, and fittings are also required. Because of the relatively low flow rates involved (compared to GC) "dead volume" in fittings, injection valves, and detector cells must be minimized to maintain good separation efficiency.

A variety of detection systems are available for HPLC. The readily available detectors of value in ambient air monitoring are listed in Table 14. By far the most widely used HPLC detector is the UV detector (either fixed or variable wavelength). Unfortunately no sensitive, universal detector (equivalent to GC/FID) is available for HPLC. This limitation tends to reduce HPLC to the role of a specialized analytical tool for determining selected classes of compounds, at least in the ambient air monitoring area.

Thin Layer and Column Chromatography--

Column chromatography and thin layer chromatography (TLC) are widely used as "cleanup" techniques prior to GC-MS, GC, or HPLC determination and are no longer widely used as determinative techniques in ambient air monitoring. The few methods where these techniques have been used for compound determination, such as PAH analysis[34], have been largely replaced by HPLC methods. However, in some cases (e.g., benzo(a)pyrene analysis in ambient air) TLC has remained a viable technique because of its lower cost compared to HPLC. A review of TLC techniques is provided in Katz' book[35]. Both TLC and column chromatography are forms of adsorption chromatography.

Spectroscopic Techniques--

Spectroscopic techniques of potential value for compound specific analysis include infrared spectroscopy (IR), fluorescence spectroscopy, and ultraviolet-visible absorption (UV-VIS) spectroscopy. However, UV-VIS and fluorescence spectroscopy are not sufficiently selective to be of value except in combination with chromatographic procedures. Consequently these two techniques are used as online HPLC detectors as well as offline determinative procedures in combination with GC, TLC or HPLC. PAH methods using these approaches have been described[36].

IR is also useful as an online or offline determinative tool. The advent of rapid scanning Fourier transform IR (FTIR) techniques has improved instrumental sensitivity and analysis speed, making online GC/FTIR techniques feasible[37]. However, GC/FTIR is still undergoing considerable development and cannot be considered a routine technique at this time.

Long path (kilometer) FTIR techniques have been used to detect individual compounds (e.g., formaldehyde) in ambient air[38]. This technique has the advantage that sample collection is not required. However, this is not a readily available technique and hence is of limited value in ambient air monitoring programs.

METHODS FOR SPECIFIC COMPOUNDS AND COMPOUND CLASSES

This section of the TAD presents information concerning specific analytical methods for selected compounds and compound classes of particular concern in ambient air monitoring. The first portion of this section defines the classification of organic compounds into specific groups based on chemical structure and the second part presents the sampling and analytical methods of primary importance.

Table 14. HPLC Detectors

Detector	Approximate Sensitivity, Amount Injected	Application
Ultraviolet (UV), Fixed or Variable Wavelength	10^{-9}g	PAH, phenols, nitrogen heterocycles
Fluorescence	10^{-12}g	PAH, aromatic amines, phenols
Electrochemical	10^{-11}g	Aromatic amines, phenols
Refractive Index	10^{-6}g	Too insensitive for environmental applications

Definition of Compound Classes

In order to minimize the number of methods required for a given monitoring program, one should attempt to use methods which apply to multiple compounds, or even multiple classes of compounds. As an aid in this selection process, Table 15 presents a broad classification of organic compounds of particular concern in ambient air monitoring studies. Table 16 presents data indicating the range of concentration of selected organic compounds in ambient urban air[71].

As shown in Table 15 organic compounds can be roughly divided into three categories - neutral, basic, and acidic. Basic compounds are readily protonated to form cations whereas acidic compounds readily deprotonate to form anions. Ionizable (acidic or basic) compounds usually require specialized analytical methods (e.g., control of pH) and hence represent a more challenging problem in ambient air monitoring programs. These compounds generally are less volatile than neutral compounds and have a tendency to adhere to surfaces, including atmospheric particles, through adsorptive, ionic, or condensation processes.

Neutral Compounds--

Neutral compounds are more commonly encountered than ionic compounds in ambient air monitoring programs because of greater volatility. Hydrocarbons, compounds containing only carbon and hydrogen, are generally the most abundant compounds in ambient air. C_1 (methane) to C_{10} hydrocarbons are present at detectable concentrations in most urban as well as rural sites. Such compounds are derived from natural sources such as trees and other vegetation as well as from petroleum processing and utilization. In areas of high gasoline emissions, the aromatic compounds, benzene and toluene, are among the most abundant hydrocarbons (other than methane which has a global background concentration of ~2 ppm).

Halogenated hydrocarbons are commonly encountered in urban, but not rural, areas since these compounds are derived exclusively from anthropogenic sources. Solvents from manufacturing, and drycleaning operations (methylene chloride, trichoroethylene, perchloroethylene, etc.) represent the most common volatile halogenated hydrocarbons. These compounds are of considerable toxicological importance and hence are commonly determined in ambient air monitoring programs. PCBs, PCNs, and halogenated pesticides represent semivolatile halogenated hydrocarbons of considerable environmental significance.

Oxygenated compounds are present through direct emission into the air as solvents (e.g., methane, ethanol, acetone, etc.) as well as through the atmospheric oxidation of olefinic hydrocarbons. For example, the interaction of olefins and ozone leads to the formation of aldehydes, especially formaldehyde.

Organic nitrogen compounds are primarily introduced into the atmosphere from chemical production or processing operations although interaction of nitrogen oxides with other organic compounds can occur. For example, interaction of PAHs with nitrogen dioxide can lead to the formation of nitro PAHs, which are believed to be highly carcinogenic. Compounds in this class have diverse properties, thereby complicating the analysis process.

Sulfur and phosphorus containing organic compounds are present in ambient air almost exclusively through direct emission into the atmosphere. Significant levels of

Table 15. Classification of Organic Compounds for Ambient Air Monitoring Studies

Compound Class	Typical Compound(s)
Neutral Compounds	
Hydrocarbons	Hexane, benzene
Halogenated Hydrocarbons	Trichloroethylene, chlorobenzene, PBCs
Oxygenates (alcohols, aldehydes)	Methanol, formaldehyde
Nitrogen Compounds	Nitrobenzene, acrylonitrile dimethylnitrosamine
Sulfur Compounds	Thiophene, dimethylsulfide
Phosphorous Compounds	Triphenylphosphate
Basic Compounds	
Aromatic Amines	Aniline, toluenediamine
Aliphatic Amines	Dimethylamine
Nitrogen Heterocycles	Pyridine
Acidic Compounds	
Phenols	Phenol, cresol, nitrophenol
Sulfonic Acid	p-toluene sulfonic acid
Carboxylic Acids	Acetic acid

Table 16. Measured Concentrations of Organic Compounds in Urban Air*

Compound	Concentration (Parts Per Trillion) MIN	MAX
Chlorofluorocarbons		
Trichlorofluoromethane (F11)	200	1,900
Dichlorofluoromethane (F12)	380	3,100
Trichlorotrifluoroethane (F113)	22	2,200
Dichlorotetrafluoroethane (F114)	12	62
Halomethanes		
Methyl chloride	430	2,300
Methyl bromide	7	1,000
Methyl iodide	0.2	7.0
Methylene chloride	49	9,400
Chloroform	19	5,100
Carbon tetrachloride	110	2,900
Haloethanes and halopropanes		
Ethyl chloride	10	1,200
1,1 Dichloroethane	8	150
1,2 Dichloroethane	45	2,500
1,2 Dibromoethane	8	370
1,1,1 Trichloroethane	130	2,700
1,1,2 Trichloroethane	<5	900
1,1,1,2 Tetrachloroethane	2	89
1,1,2,2 Tetrachloroethane	2	77
1,2 Dichloropropane	11	250
Chloroalkenes		
Vinylidene chloride	<4	220
(cis) 1,2 Dichloroethylene	21	600
Trichloroethylene	5	2,500
Tetrachloroethylene	34	7,600
Allyl chloride	<5	<5
Hexachloro-1,3 butadiene	1	150
Chloroaromatics		
Monochlorobenzene	9	2,800
a-Chlorotoluene	<5	110
o-Dichlorobenzene	1	230
m-Dichlorobenzene	1	55
1,2,4 Trichlorobenzene	1	40

Table 16. (Continued)

Aromatic hydrocarbons		
Benzene	110	37,000
Toluene	110	65,000
Ethyl benzene	50	19,000
m/p Xylene	110	23,000
o-Xylene	<10	9,700
4-Ethyl toluene	60	7,400
1,2,4 Trimethyl benzene	50	15,000
1,3,5 Trimethyl benzene	30	5,300
Oxygenated species		
Formaldehyde	6,600	41,000
Phosgene	<20	<20
Peroxyacetylnitrate (PAN)	<10	5,800
Peroxypropionylnitrate (PPN)	<10	900

*Summarized from Reference 71.

sulfur or phosphorus organic compounds are generally encountered only in the vicinity of emission sources.

Basic Compounds--

Basic compounds include strongly basic aliphatic amines, weakly basic nitrogen heterocycles, and aromatic amines which tend to have intermediate basicities. In this document, the term "aromatic amine" applies only to compounds in which the amine group is bonded directly to the aromatic ring (e.g., aniline). Compounds containing an amine group attached to an aliphatic carbon are termed "aliphatic amines" and will be more basic than aromatic amines.

Aromatic amines, especially aniline, are widely used in dyestuff and related chemical industries and are present in the atmosphere primarily through direct emission. Nitrogen heterocycles, especially pyridine, are used as a solvents and for other applications in the chemical industry. These compounds can be present at trace levels in petroleum products and liquids derived from coal. Aliphatic amines are used for a wide variety of applications and are present in the atmosphere through direct emission, either from man-made or biological sources.

Acidic Compounds--

Acidic compounds include strong acids, carboxylic and sulfonic acids, as well as weak acids - phenols. Phenols are widely used as intermediates in the chemical industry and as disinfectants. Phenols are emitted from various combustion sources and through the atmospheric oxidation of aromatic compounds. Trace levels of phenol as well as other phenolic compounds (e.g., cresols) are commonly encountered in ambient air.

Carboxylic acids are derived from natural as well as anthropogenic sources, whereas sulfonic acids are primarily derived from anthropogenic sources. Carboxylic acids can also be produced by the atmospheric oxidation of organic compounds. These compounds would be expected to be readily removed from the atmosphere through dissolution in precipitation or adsorption onto particles. Analytical difficulties have hampered the determination of strongly acidic compounds in air.

Discussion of Specific Sampling and Analysis Methods

In this portion of the TAD, an attempt has been made to select the most useful sampling and analysis methods for the organic compounds of primary concern in ambient air monitoring programs. An attempt has been made to reference methods presented as a formalized writeup (e.g., NIOSH or ASTM methods) whenever possible, since these methods require the least amount of interpretation on the part of the analyst. Unfortunately such formal methods are available for only a few compounds at the present time. A compendum of method writeups, in a standardized format is to be prepared within the next year[39].

In cases where formal methods are unavailable, literature articles have been cited. Unfortunately, most of the referenced articles do not contain complete information concerning the sampling and analysis methodology and will require considerable interpretation on the part of the user.

Table 17 provides a listing of the most widely used sampling and analysis approaches for ambient air monitoring. An attempt has been made to consolidate the wide variety of approaches for hydrocarbons and halogenated hydrocarbons into a limited number of

TABLE 17. SUMMARY OF SAMPLING AND ANALYTICAL METHODS FOR ORGANIC COMPOUNDS IN AMBIENT AIR

Method Designation	Compounds Determined	Sampling and Analysis Approach	Detection Limit	Accuracy	Precision	Relative Cost		References	Limitations	Comments
						Instrument	Time/Materials			
Hydrocarbons										
A. ASTM D2820	C_1-C_5 Hydrocarbons	Direct gas injection onto GC/FID	0.01 ppmv	--	±10%	Low	Low	3,52	Losses due to surface adsorption may occur in some cases, especially for less volatile compounds.	GC/MS can be used for component identification. GC/PID is useful for aromatics.
B. --	C_2-C_{10} Hydrocarbons and other nonpolar organics with B.P. -100 to 175°C	Whole air collection in canister cryogenic concentration; GC/FID analysis	0.1 ppbv (100 mL sample)	--	±10%	Moderate	Moderate	17,58	Storage times greater than a week are not recommended. Reactive and water soluable compounds are not readily analyzed.	GC/MS can be used for component identification. If possible, a field GC/FID should be used to avoid sample storage problems.
C. --	C_6-C_{12} hydrocarbons and other nonpolar organics with B.P. 60-200°C	Adsorption on Tenax; thermal desorption GC/MS analysis	1-200 pptv (20 liter sample)	70-95%	±10-40%	High	Moderate	27	Blank levels usually limit sensitivity. Artifacts due to reactive components (e.g. O_3, NO_x) can be a problem. Sample can be analyzed only once.	GC/FID can be used to reduce analysis cost, if component identification is not required.
D. --	C_6-C_{12} hydrocarbons and other nonpolar organics with B.P. 60-200°C	Adsorption on Tenax; thermal desorption into canisters; GC/FID or GC/MS analysis	0.01-1 ppbv (20 liter sample)	80-100%	±20%	Moderate to high, depending on GC detector	Moderate	14	Carbon tetrachloride gives poor recovery precision due to adsorption onto metal surface. Blanks and artifact problems same as above	Sample can be analyzed 3-4 times, thus allowing GC/FID quantification and GC/MS identification
E. ASTM D3686/ D3687 or NIOSH P&CAM 127	Nonpolar volatiles (B.P. 0-150°C)	Adsorption on charcoal; desorption with CS_2; analysis by GC/FID	0.1-1 ppmv (10 liter sample)	--	±10%	Low	Low	2,3	Sensitivity much poorer than for thermal desorption approaches.	Charcoal adsorbs highly volatile compounds more efficiently than Tenax.

TABLE 17. (Continued)

Method Designation	Compounds Determined	Sampling and Analysis Approach	Detection Limit	Accuracy	Precision	Relative Cost: Instrument	Relative Cost: Time/Materials	References	Limitations	Comments
F. --	Nonpolar volatiles (B.P. 0-100°C)	Adsorption on carbon molecular sieves; thermal desorption into canister; analysis by GC/FID or GC/MS	0.01-1 ppbv (20 liter sample)	80-100%	±20%	Moderate to high, depending on GC detector	Moderate	14	High temperature (350°C) required for desorption may decompose labile compounds.	See Method D.
G. NIOSH P&CAM 206	PAH	Collection of particulate matter on high volume filter; ultrasonic extraction with cyclohexane/silica powder; analysis by normal phase HPLC	3 ng/m^3 (1500 m^3 sample)	95%	±5%	Moderate	Moderate	2	PAHs more volatile than benzo(a)pyrene may be lost by volatilization during the sampling period. Approaches similar to reference 40 may be required for such compounds.	PAH and other particle bound components may be determined using GC/MS.
Halogenated Hydrocarbons										
Methods A-F can be used for volatile halogenated hydrocarbons as well, except that GC/ECD should be used in place of GC/FID in most cases.										
H. --	PCBs, PCNs, organochlorine pesticides, and other semivolatile organics (B.P. 140-450°C)	Adsorption on solid adsorbent such as polyurethane foam (PUF), XAD-2, or Chromosorb 102); solvent desorption; GC/ECD, GC/MS, or GC/FID analysis	3 ng/m^3 (1500 m^3 sample)	60-100%	±20%	Moderate to high, depending on GC detector	Moderate	40 Lower volume approaches (41,42,50)	--	Similar approaches using low volume sampling trains may be more useful for detecting higher levels (1-10 μg/m^3). Hydrocarbons with boiling points >140°C (>C_8) can be determined.

TABLE 17. (Continued)

Method Designation	Compounds Determined	Sampling and Analysis Approach	Detection Limit	Accuracy	Precision	Relative Cost: Instrument	Relative Cost: Time/Materials	References	Limitations	Comments
I. --	Tetrachloro-dibenzodioxines	Collection on high volume filter; extraction (Soxhlet) with methylene chloride; column chromatographic cleanup; high resolution GC/MS analysis	~1 pg/m^3 (1500 m^3 sample)	--	±10-20%	Very high	High	48	TCDDs occur primarily in the particle bound state, but backup adsorption approaches such as reference 40 may be required to ensure no loss occurs through volatilization.	TCDD is highly toxic, hence the need for high sensitivity. These analyses are generally conducted in a special laboratory equipped to handle such materials.
Oxygenated Neutral Compounds										
J. --	Aldehydes	Collection in dinitrophenyl hydrazine (DNPH); solvent extraction of DNPH derivatives; reversed phase HPLC analysis	1-5 ppbv (40 liter sample)	60-100%	±20%	Low	Moderate	19	Blank levels of aldehydes (particularly formaldehyde) will usually determine the detection limit. Reagents must be carefully prepared to avoid significant contamination.	Analysis within 24 hours is recommended.
K. --	Aldehydes (C_1-C_3)	Collection in 1% sodium bisulfate impinger; determine formaldehyde using chromotropic acid, acrolein using mercuric chloride-hexylresorcinol and C_2-C_5 aliphatic aldehyde by GC/FID	10-30 ppbv (assume 120 liter sample)	--	±10-20%	Low	Moderate	4	High levels of phenols, ethylene, and propylene cause negative interference with formaldehyde determination.	--

TABLE 17. (Continued)

Method Designation	Compounds Determined	Sampling and Analysis Approach	Detection Limit	Accuracy	Precision	Relative Cost: Instrument	Relative Cost: Time/Materials	References	Limitations	Comments
L. NIOSH P&CAM 556, 558, 559, 560, 562-566	Alcohols (C_1-C_5)	Adsorption on charcoal; desorption with CS_2 with 1% dissimilar alcohol; GC/FID analysis	100-1000 ppmv	--	±5-10%	Low	Low	2,56	Humidity level must not be sufficient to allow condensation in tube. Sensitivity is inadequate for most ambient air monitoring purposes.	Direct analysis in the field using GC/FID (as in Method A) should provide 1-10 ppm sensitivity.
Miscellaneous Neutral Compounds										
M. --	Nitrosamines	Adsorption on Thermosorb N; desorption with acetone; GC/thermal energy or GC/MS analysis	25 ng/m^3 (200 liter sample)	85-100%	±10%	High	Moderate	49	Thermal energy analyzer is a nitrosamine specific detector and is rather expensive ($30-40K). GC/NPD may be a less expensive alternative in many situations.	Thermosorb N is a special adsorbant from Thermo-Electron Corporation.
Sulfur, Phosphorus, and Nitrogen Compounds										
Most compounds in these classes can be determined using Methods A-F or H, depending on volatility characteristics, except that selective detectors may be used (e.g. GC/FPD for S or P compounds, GC/AFD for N or P compounds, etc.) in place of GC/FID.										
Basic Compounds										
N. NIOSH P&CAM 221	Aliphatic Amines (C_1 to C_6)	Adsorption on silica gel; elution with acid; neutralization; GC/FID analysis	500 ppbv (10 liter sample)	--	±3-5%	Low	Low	2	Sensitivity may not be adequate for ambient air monitoring.	GC/NPD can be used to obtain better sensitivity (see method below).

TABLE 17. (Continued)

Method Designation	Compounds Determined	Sampling and Analysis Approach	Detection Limit	Accuracy	Precision	Relative Cost: Instrument	Relative Cost: Time/Materials	References	Limitations	Comments
O. --	Aliphatic Amines (C_1-C_4)	Adsorption of alkali treated Porasil A; thermal desorption GC/NPD analysis	1-5 ppbv (60 liter sample)	80-100%	±5-10%	Moderate	Moderate	44	Requires careful conditioning of GC system to obtain adequate performance	--
P. NIOSH P&CAM 168	Aromatic Amines	Adsorption on silica gel; elution with ethanol; GC/FID analysis	100 ppbv (100 liter sample)	--	±10%	Low	Low	2	High humidity levels reduce adsorption capacity.	Sensitivity could be improved using GC/NPD. HPLC can also be used (46).
Q. --	Aromatic Amines	Adsorption on Tenax GC; thermal desorption GC/FID or GC/NPD analysis	1 ppbv (100 liter sample)	--	--	Low	Moderate	45	Desorption of high boiling compounds is not complete.	Solvent desorption approaches may be more effective in some cases.

Nitrogen Heterocycles

These compounds can be determined by the methods described for hydrocarbons and halogenated hydrocarbons, depending on volatility, except GC/NPD or HPLC detection of these compounds may be required. Polar GC phases (e.g. Carbowax 20 M) should be used in most cases.

"generic" approaches since an enormous number of individual literature references are available for these compounds.

Methods A-F (Table 17) represent sampling and analysis approaches for volatile hydrocarbons and halogenated hydrocarbons with boiling points less than 200 C. The simplest approach (Method A) involves direct injection of a gas sample onto a GC/FID or other detection system and is useful for compounds more volatile than benzene. Higher boiling compounds can be determined in some cases, although condensation onto the container surface is a more significant problem as volatility decreases. Use of sensitive and/or selective detectors such as ECD for halocarbons and PID for aromatics[52] or certain olefins can be of great value.

Method B involves cryogenic concentration of a whole air sample. Preferably this approach is used as a field method so as to avoid sample transport and storage problems, although laboratory analysis has been used successfully[17]. This approach is more time consuming but also much more sensitive than the direct GC injection approach and can be used at the part per trillion level in favorable cases (e.g., using GC/ECD or PID). Compounds in the C_2-C_{10} volatility range can be determined using cryogenic trapping. A limited volume of air (<500 ml) can be sampled since condensed moisture will plug the trap if greater air volumes are collected.

Methods C and D involve the sampling of ~20 liters of air using Tenax (a porous polymer adsorbent), thermal desorption of the adsorbed components, and GC or GC/MS analysis. Method C is more commonly used and involves direct desorption of the Tenax-adsorbed components onto the GC or GC/MS system. Method D involves desorption of the components into an evacuated cannister and subsequent analysis of the cannister contents. Method D offers the advantage of replicate analysis of a single sample, but is somewhat less sensitive than the former approach. Adsorptive losses of higher boiling compounds onto the cannister surface is another potential problem. An advantage of the Tenax approach, relative to cryogenic trapping, is that water and other inorganic atmospheric components are not retained. Storage of the organic components in the resin-adsorbed state also tends to circumvent problems with adsorption on container surfaces.

Major disadvantages of the Tenax adsorption approach is the potential for artifact formation (e.g., by interaction of ozone with the resin) and/or contamination. These factors tend to increase the background (blank) levels relative to cryogenic trapping, thereby adversely affecting the detection limit. The widely varying retention volumes for organic compounds on Tenax requires careful consideration for each monitoring situation. A recent report describes the Tenax adsorption process and gives retention volume data for many organic compounds of interest.[60]

Methods E and F involve adsorption of volatile, nonpolar compounds on carbon based adsorbents followed by solvent extraction or thermal desorption and GC or GC/MS analysis. Method E, adsorption of charcoal followed by extraction with CS_2 or other solvents, is the basis for many of the NIOSH methods. Unfortunately this approach is not sufficiently sensitive for most ambient air monitoring programs, although the use of selective detectors can improve sensitivity for certain compounds.

Method F has been used to some extent for ambient air monitoring of vinyl chloride and other volatile compounds. This method is similar to Method D, except that carbon molecular sieves are used in place of Tenax. Direct thermal desorption/GC analysis (analogous to Method C) could be employed for carbon molecular sieves as well. A major

advantage of this approach is the strong retention of vinyl chloride and other highly volatile materials. However, the high temperatures required for thermal desorption from carbon based adsorbents can lead to degradation of strongly adsorbed, nonvolatile and/or polar materials.

Methods G, H, and I represent approaches useful for the determination of semivolatile or nonvolatile compounds (i.e., boiling points greater than 140 C). Method G, while referenced as a PAH analysis method, is readily adapted for the determination of many nonvolatile materials adsorbed on atmospheric particulate material. Method I is referenced as a separate method for tetrachloro-dibenzodioxins (TCDDs) which are currently of great environmental concern. Highly specific cleanup and GC/MS steps are used to gain selectivity for TCDDs using the method.

Method H represents as useful approach for PCBs, PCNs, organochlorine pesticides and other semivolatile compounds which can occur in both the particle and vapor state. Such compounds are not retained using conventional high volume filtration techniques hence adsorbents such as XAD-2 or polyurethane form (PUF) must be used in back of the filtration device. The semivolatile components are then recovered from the adsorbent by solvent extraction. Tenax is less useful than XAD-2 or PUFs in this method since many solvents will partially dissolve Tenax.

The remaining methods in Table 17 represent specialized techniques for selected groups of compounds. Methods J and K are used for determination of volatile aldehydes (C_1 to C_6). Method J involves formation of the DNPH derivatives of the various aldehydes followed by reversed phase HPLC analysis, whereas Method K captures the aldehydes as bisulfite addition products and then employs a variety of colorimetric and GC analytical procedures for the individual aldehydes. Method J should generally be used if a wide variety of aldehydes are to be determined or if interferences with the colorimetric methods are likely to be encountered. The determination of formaldehyde using chromatropic acid, as in Method J, is a simple procedure and is very useful for screening pruposes, although negative and positive interferences can occur.

Detection of alcohols in ambient air has not been of widespread interest and no sensitive methods exist. Method L refers to a group of NIOSH methods employing carbon adsorption and solvent desorption/GC analysis. These methods are not useful below 100 ppm. Alcohols are not retained on porous polymer adsorbents such as Tenax and are likely to decompose if carbon adsorption/thermal desorption approaches are attempted. An analytical method involving silylation of alcohols followed by cryogenic trapping of the silylated derivative (as in Method B) has been reported[56].

Nitrosamines are of considerable environmental significance because of the toxicological hazard and potential for formation in various combustion sources. Method M refers to an approach involving collection of the nitrosamine on a specially treated nylon adsorbent (thermosorb/N) and subsequent analysis using GC with MS or thermal energy (TEA) detectors. The latter detector is relatively specific for nitrosamines[49]. Since both MS and TEA are relatively expensive detectors, the less expensive GC/NPD approach may be preferable in relatively "clean" environments in which ultimate selectivity is not necessary. Thermosorb/N minimizes the formation of nitrosamines on solid adsorbents during sampling, which has proven to be a problem on Tenax under certain sampling conditions.

Methods N-Q represent the best available methods for determining aliphatic and aromatic amines. Nitrogen heterocycles containing no other polar functional groups can usually be determined by one or more of the methods described earlier for hydrocarbons, using nitrogen selective detectors. Methods N and P represent NIOSH procedures for determining aliphatic and aromatic amines, respectively. These methods involve adsorption of the compounds on silicagel, elution with acid and GC/FID analysis. The adsorption of water reduces the capacity of the silica gel and limits the practical sampling volume. Therefore, these methods cannot determine low ppb levels of amines, although use of GC/NPD should increase the sensitivity somewhat. HPLC with fluorescence, electrochemical, or UV detection[46] can improve the detection limit for aromatic amines.

Method O involves determination of volatile aliphatic amines (C_1 -C_4) by adsorption on alkali-treated silica (Porasil A) followed by thermal desorption and GC/NPD analysis. This method is reported to achieve 1-5 ppb sensitivity if the GC system is carefully conditioned[44]. Method Q is a similar approach using Tenax/thermal desorption for aromatic amines. However the thermal instability of many aromatic amines must be considered and may limit the usefulness of this approach.

Relatively few analytical methods are available for determining acidic compounds (with the exception of phenols) in ambient air. Phenol itself and possibly cresols can be determined using a Tenax adsorption approach such as Method D. Higher boiling phenols can be determined using a resin adsorption/solvent extraction approach such as Method H. Method S represents a standard method for phenols wherein the compounds are collected in a dilute sodium hydroxide impinger and then steam distilled and analyzed by GC/FID or GC/MS. Less volatile phenols can be analyzed (without steam distillation) by HPLC with fluorescence, UV or electrochemical detection.

Volatile carboxylic acids such a formic and acetic acid can be detemined (Method R) by collection in a dilute sodium carbonate impinger followed by ion chromatographic (IC) analysis[43]. IC is a special form of ion exchange HPLC wherein conductance detection is employed (mobile phase buffer is removed prior to detection using a stripper column).

Suitable methods for determining sulfonic acids in air have not been reported. However, collection in an aqueous impinger followed by HPLC analysis[47] appears to be a viable approach.

In order to provide the reader with some useful examples of appropriate methodology, Table 18 lists a group of toxic organic compounds of concern in ambient air monitoring programs. The most appropriate methods for determining these compounds, specific literature references, and additional analytical considerations are presented in Table 18. This information should be used as guidance and will not be accurate for every monitoring situation.

The majority of the compounds in Table 18 represent volatile hydrocarbons, volatile halogenated hydrocarbons, or semivolatile halogenated hydrocarbons which can be determined using conventional cryogenic trapping, Tenax adsorption/thermal desorption, or resin adsorption/solvent extraction approaches. A few compounds (e.g., acrylonitrile, allyl chloride, ethylene oxide) are too volatile to be captured on Tenax and require use of carbon adsorbents or cryogenic trapping. Several of the compounds can be determined using the procedures for aldehydes (e.g., formaldehyde, acetaldehyde, acrolein).

TABLE 18. SUMMARY OF SAMPLING AND ANALYSIS METHODS FOR SELECTED TOXIC ORGANIC COMPOUNDS

Compound	Most Appropriate Methods From Table 17	Specific References	Comments
Acetaldehyde	J,K	4,19	Compound very unstable, requires immediate analysis or derivatization.
Acrolein	J,K	4	Compound very unstable, required immediate analysis or derivatization.
Acrylonitrile	B,F	2	NIOSH Method S156 uses methanol as desorption solvent. GC/NPD will give improved sensitivity.
Allyl Chloride (3-Chloro-1-propene)	B,E,F	2	Compound is too volatile to allow use of Tenax/thermal desorption approach. NIOSH Method S116 uses benzene solvent desorption with GC/FID analysis.
Benzyl Chloride	B,C or D	27	Cryogenic trapping or Tenax adsorption appear to be the best approaches. Adsorption on XAD-2 may also be useful. GC/PID is a useful determinative method.
Carbon Tetrachloride	B,C or D	27	Cryogenic trapping or Tenax adsorption appear to be the best approaches. Storage of samples in contact with stainless steel surfaces can result in rapid loss of this compound. GC/ECD is a useful method.

TABLE 18. (Continued)

Compound	Most Appropriate Methods From Table 17	Specific References	Comments
Chlorobenzene	B,C or D	14,27,50	Cryogenic trapping or Tenax adsorption appear to be the best approaches. GC/PID is a useful method.
Chloroform	B,C or D	14,27	Cryogenic trapping or Tenax adsorption appear to be the best approaches. GC/ECD is a useful determinative method.
Chloroprene (2-Chloro-1,3-butadiene)	B,C or D	--	Cryogenic trapping or Tenax adsorption appear to be the best approaches, although very little data is available. GC/PID is a useful determinative method.
o,m, or p-cresol (2,3, or 4-methyl phenol)	C,S,H (low volume)	4,54	Either collection in sodium hydroxide impinger, Tenax adsorption, or resin adsorption/solvent extraction can be used. GC/PID is a useful determinative method.
1,4-dichlorobenzene	B,C or D	27,50	Cryogenic trapping or Tenax adsorption appear to be the best approaches. Resin adsorption/solvent desorption approaches can be used. GC/ECD or PID are useful determinative methods.
Dimethylnitrosamine (N-nitrosodimethylamine)	M	49	Adsorption on Thermosorb N/thermal desorption appears to be the best approach. GC/NPD may provide sufficient selectivity in many cases.
Epichlorohydrin (1-Chloro-2,2-epoxypropane)	B,C or D	27	Relatively little ambient air data are available in the literature. Cryogenic trapping or Tenax adsorption appear to be viable approaches.

TABLE 18. (Continued)

Compound	Most Appropriate Methods From Table 17	Specific References	Comments
Ethylene dichloride (1,2-dichloroethane	B,C or D	14,27	Cryogenic trapping or Tenax adsorption appear to be the best approaches. GC/ECD is a useful determinative method.
Ethylene Oxide	A,B,E	2	Compound too volatile to use Tenax adsorption. Cryogenic trapping is probably the best approach.
Formaldehyde	J,K	4,19	Compound very reactive. Requires immediate analysis or stabilization.
Hexachlorocyclopentadiene	C or D,H (low volume approach)	53	Very little data available for this compound in ambient air.
Maleic Anhydride	--	--	No suitable methods could be found.
Methyl Chloroform (1,1,1-trichloroethane)	B,C or D	27	Cryogenic trapping or Tenax adsorption appear to be the best approaches. GC/ECD is a useful determinative method.
Methylene Chloride	B,F	14	Cryogenic trapping, appears to be the most useful approach. This compound is not retained well by Tenax or other polymeric adsorbents. Adsorption on carbon molecular sieves in place of Tenax is a useful approach. Laboratory contamination with methylene chloride is a common problem.
Nitrobenzene	B,C or D	14	Tenax adsorption is probably the best approach. GC/ECD, PID, or NPD are useful determinative methods.

TABLE 18. (Continued)

Compound	Most Appropriate Methods From Table 17	Specific References	Comments
Nitrosomorpholine	M	55	See Dimethylnitrosamine. HPLC may be useful in place of GC for this compound.
Perchloroethylene (Tetrachloroethylene)	B,C or D	14,27	Cryogenic trapping or Tenax adsorption appear to be the most useful approaches. GC/ECD is a useful determinative method.
Phenol	C or S	4,19	Trapping in basic impinger solution or Tenax adsorption appear to be the best approaches. GC/PID is a useful determinative method.
Phosgene	--	51	This compound is highly unstable and hence field determination is desirable. A manual colorimetric method using 4-nitrobenzyl-pyridine appears to be the best approach for routine analysis (detection limit ∿0.05 ppm for 25 liter sample).
PCBs	H	40	Adsorption of XAD-2 or polyurethane foam followed by solvent extraction and GC/ECD analysis appear to be the best approaches. PCB formulations are composed of many individual compounds and the method of quantification required careful consideration.
Propylene Oxide	B,C or D	27	Cryogenic trapping or Tenax adsorption appear to be the best approaches, although the Tenax approach should be used with caution because of the low breakthrough volume for this compound.

TABLE 18. (Continued)

Compound	Most Appropriate Methods From Table 17	Specific References	Comments
Toluene	B,C or D	14,17,27, 41,52	Cryogenic trapping or Tenax adsorption appear to be the best approaches. GC/PID is a useful determinative technique.
Trichloroethylene	B,C or D	14,27	Cryogenic trapping or Tenax adsorption appear to be the best approaches. GC/ECD is a useful determinative technique.
Vinylidine Chloride (1,1-dichloroethane)	B,C or D	14,27	Cryogenic trapping or Tenax adsorption appear to be the best approaches. GC/ECD is a useful determinative technique.
o,m,p-xylene (1,2; 1,3; or 1,4-dimethyl benzene)	B,C or D	14,17,27, 41,52	Cryogenic trapping or Tenax adsorption appear to be the best approaches. Adsorption on XAD-2 and solvent extraction is also possible. GC/PID is a useful determinative method.

Compounds in Table 18 representing significant problems for sampling and analysis include maleic anhydride, dimethylnitrosamine, nitrosomorpholine, and phosgene. The two nitrosamines have been determined in air[49,55] but require special adsorption techniques and GC analysis approaches to avoid artifact formation. Phosgene methods have been evaluated in air and a manual colorimetric technique has proven to be most suitable for routine use[51]. The instability of phosgene precludes sample collection and hence field analysis or stabilization (e.g, derivatization) approaches must be employed.

No suitable methods were found for determining maleic anhydride in air. The ion chromatographic approach described for formic and acetic acids[43] possibly could be adapted for this compound (i.e., determination as maleic acid collected in sodium carbonate impinger).

QUALITY ASSURANCE PROCEDURES

The purpose of this part of the TAD is to address quality assurance and related needs specific for the sampling and analysis approaches described above. The overall QA requirements of ambient air monitoring programs have been described in Section 3 of the TAD and references therein[7,8].

Method Validation

Validation of method performance is important in all sampling and analysis programs but is of special significance for trace organic monitoring because of the large number of compounds of interest and variables affecting method performance. In many situations time, cost, or technical limitations will preclude rigorous method validation and certain assumptions will be required. Ideally any such assumptions will be based on sound technical judgement and/or prior experience.

Aspects of method performance requiring validation include the following:

- Accuracy
- Precision
- Blank or background level
- Detection limit
- Interferences
- Ruggedness (effect of important variables on method performance).

In the ideal situation each of these aspects of method performance will be evaluated using the entire sampling and analysis scheme to monitor an atmosphere containing constant, known amounts of the analytes under conditions identical to the field. Two technical limitations prevent the accomplishment of this "ideal" method validation strategy in most cases.

The most severe limitation is that duplication of field conditions is impossible because of the wide variability in field conditions. The second limitation is that generating atmospheres of known constant composition is relatively difficult, especially for unstable components which also pose the greatest problem for sampling and analysis.

A typical approach used to partially overcome these limitations is shown in Figure 12. In this scheme a laboratory validation effort is conducted wherein the emphasis is

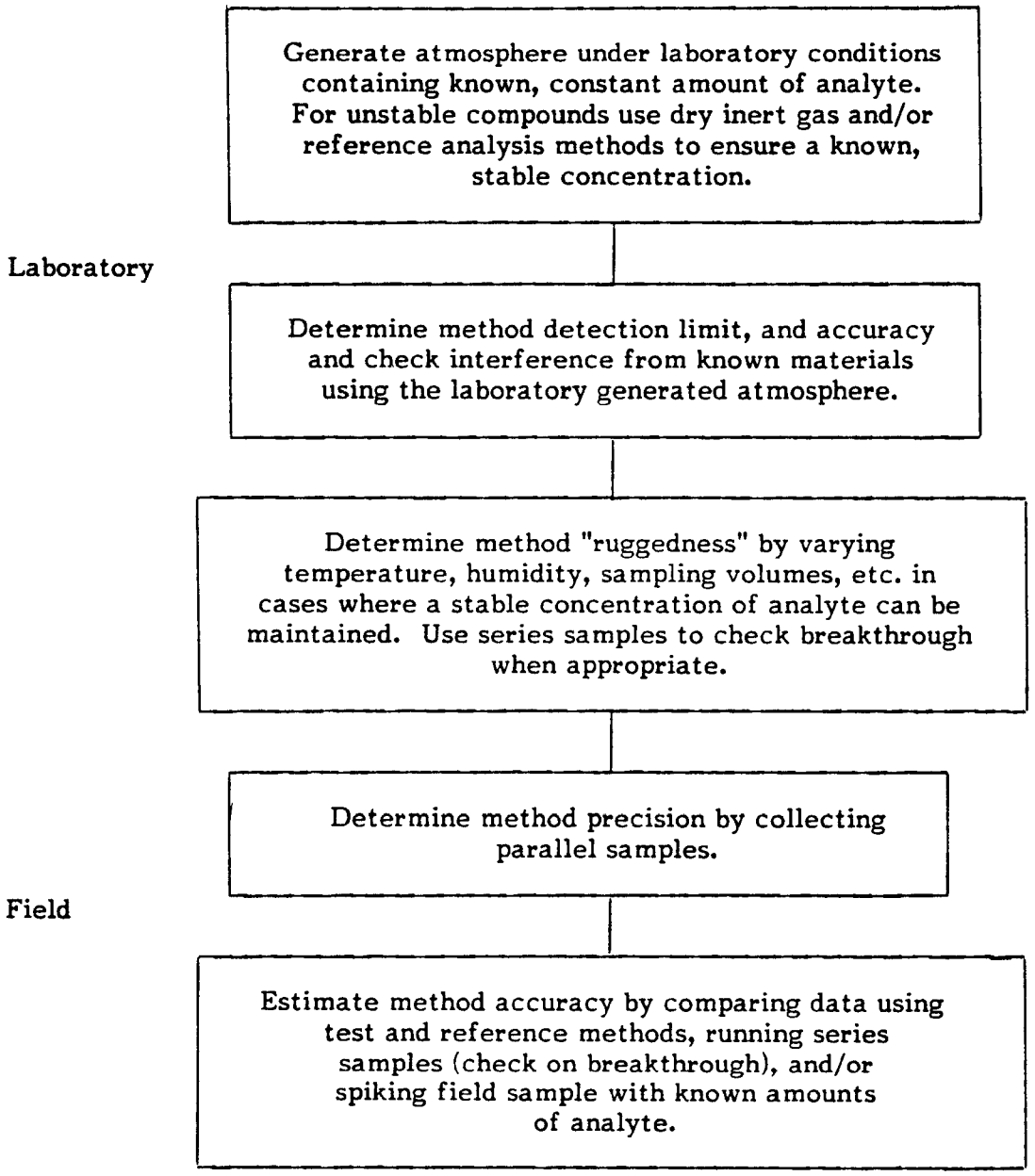

Figure 12. Method Validation Scheme

placed on generating a known, stable concentration of analyte. Unstable compounds may require the use of dry, inert gas (e.g., nitrogen) to make up the atmosphere. In some cases reference methods may be available as a check on compound stability (such methods need not be highly specific since a relatively clean atmosphere is being employed).

Method detection limit, precision, accuracy, interferences, and background can be determined using the laboratory generated atmosphere. Method ruggedness can be tested provided the variables do not affect the analyte stability; unstable compounds often will not meet this requirement.

The field method validation efforts include a check on precision using parallel sampling. Accuracy can be estimated through the use of reference or alternate methods, and/or spiking field samples with known quantities of analyte. The latter approach must be accomplished in such a manner that all of the spiked material enters the sampling device. Alternatively, one can choose to spike the collected sample (e.g., impinger liquid, resin cartridge, etc.) as a check only on the sample transport and analytical procedures. Series samplers can be used as a check on capture efficiency (analyte breakthrough) but will not determine accuracy. In many cases, it will be useful to collect series samples using various sampling volumes to further document component breakthrough characteristics.

Instrument Calibration

Instrument calibration requirements for sampling and analysis equipment are outlined in Table 19. Specific calibration and maintenance procedures will vary somewhat from one manufacturer to another, hence the user should consult the instrument manual for more specific information.

Sampling equipment calibration procedures for toxic organic monitoring are similar to other types of monitoring and adequate information on this subject can be found in the literature[59]. Continuous analyzers require that a suitable calibration standard be available in the field. Ideally the calibration standard is a dilute mixture or series of dilute mixtures of the analyte at stable concentrations. Methods for generating such atmospheres can be static (e.g., dilution flasks, compressed gas cylinders) or dynamic (e.g., permeation tubes, diffusion tubes, syringe delivery systems). In all cases, a method of generating clean air must be available in order to set the baseline level on the continuous monitor as well as for the generation of calibration standards. Methods for generating clean air as well as static and dynamic calibration methods are discussed in the literature[4].

In general, static systems are most convenient to use and are the preferrred calibration methods, provided the analytes are stable in the dilution system. Generally light hydrocarbons and other stable, volatile compounds (e.g., halocarbons) are suitable for static calibration. Dynamic calibration systems, while more complex for field use, are often required for reactive materials (e.g, phosgene) which may be degraded in the static systems.

Less volatile materials such as PCBs, organochlorine, pesticides, or PAHs are rarely of interest for continuous monitors since the ambient concentrations of these materials are usually not detectable using this approach. If atmospheres of such compounds are to be generated probably the best approach is a heated dynamic dilution system wherein a dilute solution of the material in a volatile solvent is delivered at a constant rate into the gas stream using a syringe pump.

TABLE 19. CALIBRATION REQUIREMENTS FOR SAMPLING AND ANALYSIS INSTRUMENTATION

Device	Parameter Calibrated	Method of Calibration	Approximate Frequency	Comments
Sampling Instrumentation				
Sampling pump and controller	Flow rate	Wet or dry test meter or calibrated rotometer	Weekly	
Sample volume measurement device (usually a dry test meter)	Total volume	Wet test meter	Weekly	Must be determined at known atmospheric pressure and temperature. Flow rate should be similar to that used for sampling.
Analytical Instruments				
Continuous monitors (e.g., FID, PID, FPD, etc.)	Response	Generation of test atmosphere of known concentration	Daily or more frequently if required	Test atmosphere should be referenced to a primary standard (e.g., NBS benzene in air). Flow/pressure conditions should duplicate sampling process.
Chromatographic instruments	Column performance and retention time for each analyte	Injection of standard using the same process as for sample injection	Daily or more frequently if required	Standard composition should be checked against primary standards if available.
Chromatographic instruments	Response for each analyte	Same as above	Same as above	Same as above
GC/MS	Response and retention time for each analyte	Same as for other chromatographic instruments.		
GC/MS	Mass spectral resolution and turning parameters	(a) Introduction of perfluoro-compound directly into MS (b) injection of tuning standard (e.g., bromofluoro-benzene) into GC	Daily	Selection of tuning standards will be dependent on type of of analysis being performed.

Chromatographic instrumentation requires calibration of both the retention time and response characteristics of the analytes under the conditions used for the analysis of samples. Samples delivered to the instrument in liquid form (e.g., XAD or PUF extracts, impingers, etc). represent no particular problems since liquid standards of the analytes may be readily prepared. However, techniques such as whole air injection, cryogenic trapping, and thermal desorption (e.g., Tenax) require the generation of a known, stable gas phase calibration standard, using methods similar to those described for continuous monitors. In the case of the Tenax thermal desorption method standards have been successfully prepared using a heated static dilution flask wherein the sample is injected onto a clean Tenax cartridge using a gas-tight syringe.

The performance of GC columns, especially capillary columns should be checked periodically in terms of column efficiency (theoretical plates) and peak asymmetry (especially for polar compounds). This performance check can be done using liquid calibration standards and is a useful tool for determining when a column needs to be replaced.

Mass spectrometers require various calibration steps, in addition to the normal chromatographic calibration requirements. These include calibration of the mass spectral relative intensities and mass resolution. Quadrupole MS systems are greatly effected by such tuning parameters and hence data performance checks are required to ensure the usefulness of the mass spectrum for peak identification.

In practice, two levels of MS tuning calibration are usually performed. First a volatile perfluoro-compound (e.g., perfluorokerosine or perfluorotributylamine) is introduced into the ion source and the MS tuning parameters are adjusted to yield certain spectral characteristics. This tuning process is usually described in detail in the instrument manual. A second level of tuning involves the injection of a particular compound EPA methodology (70) prescribes bromofluorobenzene for volatiles and decafluorotriphenylphosphine (DFTPP) for semivolatile compounds onto the GC/MS system. If the mass spectral characteristics for the reference compound are not correct, the parameters are adjusted and the calibration process repeated.

Routine Quality Control

In addition to method validation and instrument calibration processes, the monitoring program should include certain processes for periodically documenting performance of the sampling and analysis procedures. Typical frequencies for sampling/analysis QC samples are shown in Table 20. In the case of continuous monitors the calibration process itself serves as a periodic indicator of method performance. Other sampling and analysis systems require the collection or acquisition of QC samples to check method performance. The types of QC samples of primary value include:

- Blanks (both field and laboratory)
- Spiked samples
- Internal standards
- Replicate parallel samples (or split samples)
- Series samples
- Reference samples.

Blanks should be processed exactly as the samples, except that no air is drawn through the sampler. If samples are transported to the laboratory for analysis then laboratory as well as field blanks should be included. In the case of resin samples (e.g., Tenax)

Table 20. Typical Sampling/Analysis Frequencies for QC Samples

Type of Sample	Typical Frequency
Field Blanks	Each Sample Set; at least 10% of total number of samples.
Laboratory Blanks	Daily; at least 10% of total number of samples. Each batch of samples.
Spiked Samples	Each sample set; weekly
Duplicate (parallel) Samples	10% of total number of samples; each sample set.
Instrument Calibration Standards	Daily
Reference Samples	Weekly
Series (Backup) Samples	Each sample set.

both laboratory and field blanks should be routinely analyzed since contamination during transport is a common problem. Material blanks such as Tenax cartridges, impinger solutions, etc. should be routinely analyzed prior to sampling to avoid wasting valuable field efforts due to contamination. Blanks for whole air collection or cryogenic trapping systems will simply be clean air as used for instrument calibration.

Spiked samples must be prepared in such a manner that (a) the sample form is not altered by the spiking process and (b) all of the spike material is available to the sampling system. In many cases, the air stream itself cannot be spiked because of technical practicalities. Consequently the most common approach is to spike the collection matrix (e.g., Tenax resin, impinger, etc.) either before or after sampling. Resin cartridges can be spiked using the static dilution system described above. In some cases (e.g., for volatile, stable compounds) a whole air sample can be collected in a cylinder or Teflon bag and spiked with a known amount of analyte.

The use of internal standards (IS) is advisable for chromatographic methods for which the IS can be placed into the sample without altering it. The use of an IS helps to track instrument sensitivity and to compensate for losses during sample processing. Internal standards are most commonly employed for liquid injection or thermal desorption methods but are not advisable for whole air injection or cryogenic trapping in most cases. Internal standards are especially useful for GC/MS techniques since the stable isotopically (e.g., deuterium or ^{13}C) labeled analytes can be placed into the sample and compensate for any losses during processing or changes in instrument response. This approach has been used extensively for Tenax thermal desorption procedures.

Method precision can be routinely monitored by collecting replicate parallel samples. The precision of the analytical step alone can be determined using split samples, provided homogeneous splits can be prepared without contaminating or otherwise altering the sample. In practice impinger solutions and other liquid samples can be split, but resin samples cannot due to inhomogeneous distribution of the analytes in the resin.

Collection of replicate samples of varying sample volumes can be useful for determining sampling volume effects on the method. Series samples are recommended as routine checks on breakthrough for resin samplers, since changes in atmospheric conditions may alter the breakthrough characteristics of a given analyte. Collection of series samples using different sample volumes, while time consuming, may be a necessary diagnostic tool in certain cases. This type of consideration is discussed in a recent report for solid adsorbent sampling procedures[60].

Reference samples, especially standards available from NBS, are useful as a routine check on method accuracy although only a limited number of such samples are available. NBS gas standards for organics (e.g., benzene) will become available in the near future and will be of great value in the toxic organic monitoring area. Secondary standards supplied by various manufacturers and calibrated against an NBS reference (e.g., propane in air) are currently in widespread use both of instrument calibration and routine quality control. NBS SRM 1649, an urban dust, is available as a reference standard for particulate phase PAH determinations.

Data Handling

This section of the TAD discusses specific calculation processes for converting raw data to a meaningful form. Methods for data presentation and QA requirements with respect to data processing have been presented in Section 3 and references therein[9].

Most of the NIOSH and ASTM methods contain equations for converting raw analytical data to final concentrations, many of which are applicable to other sampling and analysis methods. Raw data obtained during the sampling and analysis process should include the following:

- Volume of sample collected (uncorrected for ambient pressure and temperature)-V_{SA}
- Temperature of sample volume measuring system-T_S
- Ambient atmospheric pressure at sampling site-P_S
- Quantity of analyte in total sample-Q_A.

In almost all cases, the final data should be presented in terms of quantity of analyte per unit volume, under standard conditions (25 C and 760 mm Hg pressure). Actual sample volume can be converted to standard sample volume V_{SS} using the following equation:

$$V_{SS}\ (m^3) = V_{SA}\ (m^3) \times \frac{298}{T_S\ (^oC) + 273} \times \frac{P_S\ (mm\ Hg)}{760}$$

The concentration of analyte (C_A) in the sample under standard conditions can then be readily calculated as follows:

$$C_A\ (\mu g/m^3) = \frac{Q_A\ (g)}{V_{SS}\ (m^3)}$$

In many cases, one may wish to convert concentrations from $\mu g/m^3$ to parts per billion (ppbv), although these units are only meaningful if the material is present entirely in the gas phase (i.e., nonvolatile compounds such as PAHs should always be reported in $\mu g/m^3$ or similar units). The following equation can be used to convert $\mu g/m^3$ to ppbv for gas phase components at 25 C and 760 mm pressure:

$$C_A\ (ppbv) = C_A\ (\mu g/m^3) \times \frac{24.4}{MW_A}$$

where MW_A = molecular weight of analyte.

In many cases, hydrocarbon concentrations are most useful when reported in terms of ppbC (parts per billion carbon) since this unit is relatively proportional to the output of an FID detector for such compounds. The following equations can be used to calculate ppbC:

$$C_A\ (ppbC) = C_A\ (ppbv) \times N_C$$

where N_C = the number of carbons in the analyte molecule. In a strict sense the term ppbC should be reserved for hydrocarbons since the presence of O, Cl, N, etc. greatly affects the per carbon response of the FID.

REFERENCES

1. Air Pollution, A. C. Stern, ed., 2nd Edition, V. II, Academic Press, New York, 1968. pp. 329-391.

2. NIOSH Manual of Analytical Methods, Parts 1-3. 2nd Edition,National Institute for Occupational Safety and Health, Cincinnati, Ohio, 1977.

3. Annual Book of Standards. Part 26, Gaseous Fuels; Coal and Coke; Atmospheric Analysis. American Society for Testing and Materials, Philadelphia, Pennsylvania. (Published Annually)

4. Methods of Air Sampling and Analysis, M. Katz, ed., 2nd Edition, American Public Health Association, Washington, D.C., 1977.

5. Air Pollution, A. C. Stern, ed., 3rd Edition, V. III, Academic Press, New York, 1976. pp. 344-368.

6. Ambient Monitoring Guidelines for Prevention of Significant Deterioration (PSD). EPA-450/4-80-012 (PB 81-153231). U.S. Environmental Protection Agency, Research Triangle Park, North Carolina, 1980. 45 pp.

7. Quality Assurance for Air Pollution Measurement Systems. U.S. Environmental Protection Agency, Research Triangle Park, North Carolina, January 1976. Vol I - Principles, EPA-600/9-76-005. Vol II - Ambient Air Specific Methods, EPA-600/4-77-027a.

8. Interim Guidelines and Specifications for Preparing Quality Assurance Project Plans, QAMS-005/80, U.S. Environmental Protection Agency, Washington, D.C., December 29, 1980.

9. Reference 5. pp. 453-484.

10. Handbook of Chemistry and Physics, Chemical Rubber Company, Cleveland, Ohio. (Published Annually)

11. The Merck Index, Merck and Co., Rahway, New Jersey. (Published Annually)

12. Handbook of Environmental Data on Organic Chemicals, K. Verschueren, ed., Van Nostrand and Co., New York, 1977. 659 pp.

13. Reference 4. pp. 38-48.

14. Kebbekus, B. B., and J. W. Bozzelli. Collection and Analysis of Selected Volatile Organic Compounds in Ambient Air. Proc. Air Pollution Control Assoc., Paper No. 82-65.2. Air Poll. Control Association, Pittsburgh, Pennsylvania, 1982.

15. Holzer, G., H. Shanfield, A. Zlatkis, W. Bertsch, P. Juarez, H. Mayfield, and H. M. Liebich. Collection and Analysis of Trace Organic Emissions from Natural Sources. J. Chromatog. 142, 1977. pp. 755-764.

16. Reference 5. pp. 156-158.

17. Holdren, M., S. Humrickhouse, S. Truitt, H. Westberg, and H. Hill. Analytical Technique to Establish the Identity and Concentration of Vapor Phase Organic Compounds. Proc. Air Poll. Control Assoc., Paper No. 79-52.2, Air Pollution Control Association, Pittsburgh, Pennsylvania, 1979.

18. Reference 5. pp. 152-154.

19. Fung, K., and D. Grosjean. Determination of Nanogram Amounts of Carbonyls as 2,4-Dinitrophenylhydrazones by HPLC. Anal. Chem. 53, 1981. pp. 168-171.

20. Reference 5. pp. 3-47.

21. Reference 4. pp. 191-205.

22. Kolak, N. P., and J. R. Visalli. Comparison of Three Methods for Measuring Suspended Particulate Concentrations. Env. Sci. Tech, 15, 1981. pp. 219-224.

23. Mitchell, R. I., W. M. Henry, and N. C. Henderson. "Mega-volume Respirable Particulate Sampler (Mark II)". Proc. Air Poll. Control Assoc., Paper No. 77-35.1, Air Pollution Control Association, Pittsburgh, Pennsylvania, 1977.

24. IERL-RTP Procedures Manual: Level 1 Environmental Assessment, 2nd Edition, EPA 600/7-78-201. U.S. Environmental Protection Agency, Research Triangle Park, North Carolina, October 1978.

25. Reference 4. pp. 184-186.

26. Ibid. pp. 88-98.

27. Krost, K., E. D. Pellizzari, S. G. Walbun, and S. A. Hubbard. Collection and Analysis of Hazardous Organic Emissions. Anal. Chem. 54, 1982. pp. 810-818.

28. McFadden, W. H. Techniques of Combined Gas Chromatography Mass Spectrometry, John Wiley and Sons, New York, 1973.

29. Lane, D. A. Mobile Mass Spectrometry. Env. Sci. Tech. 16, 1982. pp. 38A-46A.

30. Burlingame, A. L., A. Dell, and D. H. Russel. Gas Chromatography Mass Spectrometry. Anal. Chem. 54, 1982. pp. 363R-409R.

31. Gas Chromatography with Glass Capillary Columns, Jennings, W., ed., Academic Press, New York, 1978.

32. Recent Advances in Capillary Gas Chromatography, Bertsch, W., G. Jennings, and R. E. Kaiser, ed., Verlag, Heidelberg, 1981.

33. Introduction to Modern Liquid Chromatography, Snyder, L. R., and J. J. Kirkland, 2nd Edition, John Wiley and Sons, New York, 1979.

34. Reference 4. pp. 248-256.

35. Ibid. pp. 128-136.

36. Ibid. pp. 216-219.

37. Shafer, K. H., M. Cooke, F. DeRoos, R. J. Jakobsen, O. Rosario, and J. D. Mulik. WCOT Capillary Column GC/FT-IR and GC/MS for Identifying Toxic Organic Pollutants. Applied Spectroscopy, 35, 1981. pp. 469-472.

38. Tuazon, E. C., A. M. Winer, R. A. Graham, and J. N. Pitts. Atmospheric Measurements of Trace Pollutants by Kilometer-Pathlengths FT-IR Spectroscopy. In Advances in Environmental Science and Technology, 10, 1980. pp. 259-300.

39. Compendium of Sampling and Analysis Methods for Organic Compounds in Ambient Air. U.S. Environmental Protection Agency, North Carolina, in preparation (1983).

40. Jackson, M.D., and R. G. Lewis. Polyurethane Foam and Selected Sorbents as Collection Media for Airborne Pesticides and PCBs. In Sampling and Analysis of Toxic Organics in the Atmosphere, ASTM STP 721, American Society for Testing and Materials, Philadelphia, Pennsylvania, 1980. pp. 36-47.

41. VanTassel, S., N. Amalfitano, and R. S. Norang. Determination of Arenes and Volatile Haloorganic Compounds in Air at Microgram per Cubic Meter Levels by Gas Chromatography. Anal. Chem., 53, 1981. pp. 2130-2135.

42. Erickson, M. D., L. C. Micheal, R. A. Zweidinger, and E. D. Pellizzari. Development of Methods for Sampling and Analysis of Polychlorinated Naphthalenes in Ambient Air. Env. Sci. Tech., 12, 1978. pp. 927-931.

43. Bodek, I., and K. T. Menzies. Ion Chromatographic Determination of Formic Acid in Diesel Exhaust and Mine Air. In Chemical Hazards in the Workplace, G. Choudhary, ed., Symposium Series 149, American Chemical Society, Washington, D.C., 1981. pp. 599-613.

44. Kuwata, K., Y. Yamazaki, and M. Uebori. Determination of Traces of Low Aliphatic Amines by Gas Chromatography. Anal. Chem., 52, 1980. pp. 1980-1982.

45. Bowen, B. E. Determination of Aromatic Amines by an Adsorption Technique with Flame Ionization Gas Chromatography. Anal. Chem., 48, 1976. pp. 1584-1587.

46. Lores, E. M., D. W. Bristol, and R. F. Moseman. Determination of Halogenated Anilines and Related Compounds by HPLC with Electrochemical and UV Detection. J. Chrom. Sci., 16, 1978. pp. 358-362.

47. Knox, J. H., and G. R. Laird. Soap Chromatography-A New HPLC Technique for Separation of Ionizable Materials. J. Chrom., 122, 1976. pp. 17-34.

48. Harvan, D. J., J. R. Hass, J. L. Schroeder, and B. J. Corbett. Detection of Tetrachlorodibenzodioxins in Air Filter Samples. Anal. Chem., 53, 1981. pp. 1755-1759.

49. Rounbehler, D. P., J. W. Reisch, and D. H. Fine. Nitrosomine Air Sampling Using a New Artifact-Resistant Solid Sorbent System. In Sampling and Analysis of Toxic Organics in the Atmosphere, ASTM STP 721, American Society for Testing and Materials, Philadelphia, Pennsylvania, 1980. pp. 80-91.

50. Langhorst, M. L., and T. J. Nestrick. Determination of Chloro-benzenes in Air and Biological Samples by Gas Chromatography with Photoionization Detection. Anal. Chem., 251, 1979. pp. 2018-2025.

51. Ruggle, R. M., G. G. Esposito, T. L. Guivan, T. L. Hess, D. Lillian, G. Podolak, K. G. Sexton, and N. V. Smith. Field Evaluation of Selected Monitoring Methods for Phosgene in Air. Amer. Ind. Hyg. Assoc. J., 40, 1979. pp. 387-394.

52. Hester, N. E., and R. A. Meyer. A Sensitive Technique for Measurement of Benzene and Alkylbenzenes in Air. Env. Sci. Tech., 13, 1979. pp. 107-109.

53. Dillon, H. K. Development of Air Sampling and Analytical Methods for Toxic Chlorinated Organic Compounds. NTIS Report No. PB80-193279, National Institute for Occupational Safety and Health, 1980. 84 pp.

54. Iwansiya, Y., and T. Nishishita. Determination of Phenols in the Atmosphere by Concentration Equilibrium-Sampling Gas Chromatography. Bunseki Kagaku, 28, 1979. pp. 26-31.

55. Goff, E. U., J. R. Coombs, D. H. Fine, and T. M. Baines. Determination of N-Nitrosamines from Diesel Engine Crackcase Emissions. Anal. Chem., 52, 1980. pp. 1833-1836.

56. Osman, M., H. H. Hill, M. W. Holdren, and H. Westberg. Vapor-Phase Silylation of Alcohols for Air Analysis. In Advances in Chromatography, A. Zlatkis, ed., Chromatography Symposium - University of Houston, Houston, Texas, 1979. pp. 301-312.

57. Rasmussen, R. A., D. E. Harsch, P. H. Sweany, J. P. Krasnec, and D. R. Cronn. Determination of Atmospheric Halocarbons by a Temperature Programmed Gas Chromatographic Freezeout Concentration Method. J. Air Poll. Cont. Assoc., 27, 1977. pp. 579-581.

58. Air Sampling Instruments for Evaluation of Atmospheric Contaminants, 5th Edition, American Conference of Governmental Industrial Hygienists, Cincinnati, Ohio, 1978.

59. Reference 4. pp. 16-26.

60. Walling, J. F., R. E. Berkley, D. H. Swanson, and F. J. Toth. Sampling Air for Gaseous Organic Chemicals Using Solid Adsorbents-Application to Tenax. EPA-600/7-54-82-059, U.S. Environmental Protection Agency, Research Triangle Park, North Carolina, 1982. 32 pp.

61. Cox, R. D., and R. F. Earp. Determination of Trace Level Organics in Ambient Air by High Resolution Gas Chromatography with Simultaneous Photoionization and Flame Ionization Detection. Anal. Chem., 54, 1982. pp. 2265-2270.

62. Pellizari, E. D. Electron Capture Detection in Gas Chromatography. J. Chrom., 98, 1974. pp. 323-361.

63. Freedman, A. N. Photoionization Detector Response. J. Chrom., 236, 1982. pp. 11-15.

64. Dahlgran, J. R. Simultaneous Detection of Total and Halogenated Hydrocarbons in Complex Environmental Samples. J. High Resolut. Chrom. and Chrom. Commun., 4, 1981. pp. 393-397.

65. Parliment, T. H., and M. D. Spencer. Applications of Simultaneous FID/NPD/FPD Detectors in the Capillary Gas Chromatograph Analysis of Flavors. J. Chrom., 19, 1981. pp. 435-438.

66. Towns, B. D., and J. N. Driscoll. Detection and Identification of Amines Using GC-PID/NPD in Series. American Laboratory, 14, 1982. pp. 56-62.

67. McCarthy, L. V., E. B. Overton, C. K. Paschke, and J. L. Laseter. Analysis of Trace Levels of Volatile Organic Contaminants in Municipal Drinking Water by Glass Capillary Gas Chromatography Using Simultaneous Flame Ionization and Electron Capture Detection. Anal. Lett., 13, 1980. pp. 1417-1429.

68. McCarthy, L. V., E. B. Overton, M. A. Maberry, S. A. Antoine, and J. L. Laseter. Glass Capillary Gas Chromatography with Simultaneous Flame Ionization (FID) and Hall (HECD) Detection. J. High Resolut. Chrom. and Chrom. Commun., 4, 1981. pp. 164-168.

69. Oomens, A. C. Experience with a Dual Detector Headspace Gas Chromatograph for Acrylonitrile Analysis. In Applications of Headspace Gas Chromatography, B. Kolb, ed., Heyden, London, 1980. pp. 11-116.

70. GC-MS Methods 624 and 625 for the Determination of Organic Priority Pollutants in Water. Available from the U.S. Environmental Protection Agency, Cincinnati, Ohio, 1982.

71. Singh, H. B., L. J. Salas, A. Smith, R. Stiles, and H. Shigeishi. Atmospheric Measurements of Selected Hazardous Organic Chemicals. EPA-600/53-81-031 (PB81-200-628). U.S. Environmental Protection Agency, Research Triangle Park, North Carolina, 1981.

APPENDIX

DEFINITION OF TERMS

absorbance: the logarithm to the base of 10 of the reciprocal of transmittance.

accuracy: the degree to which a measured value agrees with the true or accepted reference value (e.g., pollutant concentration), usually expressed as the percentage of the true or reference value represented by the difference between the two (true and measured) values.

acidic compound: a compound which dissociates in water to form a hydrogen ion (proton) and the corresponding anion (e.g., acetic acid dissociates into a hydrogen ion and the acetate anion).

adsorbate: material that has been retained by the process of adsorption.

adsorbent: solid material on the surface of which adsorption takes place.

adsorption: a physical process in which molecules of gas, of dissolved substances, or of liquids, adhere in an extremely thin layer to the surfaces of solid bodies with which they are in contact.

aerosol: a dispersion of solid or liquid particles in gaseous media.

air at normal conditions (standard air): air at 50 percent relative humidity, 70 F and 29.92 in. Hg (21 C and 760 mm Hg). These conditions are chosen in recognition of the data which has been accumulated on air-handling equipment. They are sufficiently near the 25 C and 760 mm Hg commonly used for indoor air contamination work that no conversion or correction ordinarily need be applied.

air pollution: the presence of unwanted material in the air. The term "unwanted material" here refers to material in sufficient concentrations, present for a sufficient time, and under circumstances to interfere significantly with comfort, health, or welfare of persons, or with the full use and enjoyment of property.

aliquot: a representative portion of the whole.

alkali flame detector (AFD): see nitrogen phosphorus detector.

atmosphere, an: a unit of pressure equal to the pressure exerted by a vertical column of mercury 760 mm high, at a temperature of O C, and under standard gravity.

atmosphere, synthetic: a specific gaseous mass containing any number of constituents and in any proportion produced by man for a special purpose.

atmosphere, the: the whole mass of air surrounding the earth and being composed largely of oxygen and nitrogen.

basic compounds: compounds which protonate (add a hydrogen ion) in water to form a cation (e.g., amines).

breathing zone: that location in the atmosphere at which persons breathe.

bubbler: a sampling device consisting of a gas disperser immersed in an absorbing liquid.

bubbler, fritted: a bubbler having a frit as the gas disperser.

calibration: establishment of a relationship between the response of a measurement system obtained by introducing various calibration standards into the system. The calibration levels should bracket the range of levels for which actual measurements are to be made.

chemiluminescence detection: the measurement of emitted visible or ultraviolet radiation resulting from the reaction of a pollutant with a reactive gas (e.g., detection of nitric oxide by reaction with ozone).

column chromatography: a separation technique wherein the stationary phase is a solid (e.g., silica gel) and the mobile phase is a liquid, usually an organic solvent or mixture of solvents. The technique is usually performed using a tubular column operating an ambient pressure, and is most commonly used for the removal of potential interferences prior to determination of the compound of interest.

collection efficiency: the percentage of a specified substance retained by a gas cleaning or sampling device.

colorimeter: an instrument used for color measurement based on optical comparison with standard colors.

condensate: liquid or solid matter formed by condensation from the vapor phase. In sampling, the term is applied to the components of an atmosphere which have been isolated by simple cooling.

condensation: the process of converting a material in the gaseous phase to a liquid or solid state by decreasing temperature, by increasing pressure, or both. Usually in air sampling only cooling is used.

contaminant: a material added by human or natural activities which may, in sufficient concentrations, render the atmosphere unacceptable.

cryogenic collection (trapping): a sampling process wherein an air sample is passed through a cooled trap (usually using liquid argon or similar material as the cryogen) to collect organic compounds.

density: the mass per unit volume of substance.

derivatization: a sampling and analysis process wherein a compound to be monitored is converted to another more stable and/or readily detectable compound via chemical reaction during the sampling or analysis step.

desorption: the process of freeing from a sorbed state.

detection limit: the minimum quantity of a compound which yields a "measureable response". Many statistical definitions of "measureable response" are in use. One must be careful to differentiate "instrumental detection limit", which refers to the minimum quantity of material introducible into a measurement system which can be detected from "method detection limit" which refers to the minimum concentration of compound in the sample which, when carried through the entire sampling and analysis process, can be detected.

diffusion, molecular: a process of spontaneous intermixing of different substances, attributable to molecular motion and tending to produce uniformity of concentration.

dispersion: the most general term for a system consisting of particulate matter suspended in air or other gases.

diurnal: recurring daily. Applied to (variations in concentration of) air contaminants, diurnal indicates variations that follow a distinctive pattern and which recur from day to day.

droplet: a small liquid particle of such size and density as to fall under still conditions but which may remain suspended under turbulent conditions.

dust: a loose term applied to solid particles predominantly larger than colloidal and capable of temporary suspension in air or other gases. Dusts do not tend to flocculate except under electrostatic forces; they do not diffuse but settle under the influence of gravity. Derivation from larger masses through the application of physical force is usually implied.

efficiency: a measure of the performance of a collector. Usually it is the ratio of the amount collected to the inlet loading, expressed in percentage.

efficiency, fractional: the mean collection efficiency for specific size fractions of a contaminant. Commonly this term has been applied to the performance of air cleaning equipment towards particulate matter in various size ranges.

electron capture detector (ECD): a detection device for gas chromatography which responds sensitively and selectively to electron deficient (e.g., halogenated, nitrosubstituted) compounds.

elute: to remove sorbed materials from a sorbent by means of a fluid.

emissions: the total of substances discharged into the air from a stack, vent, or other discrete source.

filter: a porous medium for collecting particulate matter.

filter, controlled pore: a filter of various plastics or metals having a structure of controlled uniform pore size. Sometimes referred to as a membrane or molecular filter.

flame ionization detector (FID): a detection device for gas chromatography which responds to most organic compounds.

flame photometric detector (FPD): a detection device for gas chromatography which responds selectively to sulfur- and phosphorus-containing compounds.

flowmeter: an instrument for measuring the rate of flow of a fluid moving through a pipe or duct system. The instrument is calibratd to give volume or mass rate of flow.

fluorescence spectrometry: the measure of ultraviolet or visible radiation emitted by a compound after excitation with radiation of a lower wavelength. The technique is widely used for the determination of polynuclear aromatic hydrocarbons.

fly ash: the finely divided particles of ash entrained in flue gases arising from the combustion of fuel. The particles of ash may contain incompletely burned fuel. The term has been applied predominantly to the gas-born ash from boilers with spreader stoker, underfeed stoker, and pulverized fuel (coal) firing.

fog: a loose term applied to visible aerosols in which the dispersed phase is liquid. Formation by condensation is usually implied. In meterorology, a dispersion of water or ice.

fractionation: the process of separating a mixture into components having different properties (as by distillation, precipitation, or screening).

freezing out: see sampling, condensation or cryogenic collection.

frit: a porous material permeable to gas flow usually made by sintering microbeads of an appropriate material.

fume: properly, the solid particles generated by condensation from the gaseous state, generally after volatilization from melted substances, and often accompanied by a chemical reaction such as oxidation. Fumes flocculate and sometime coalesce. Popularly, the term is used in reference to any or all types of contaminant, and in many laws or regulations with the added qualification that the contaminant have some unwanted action.

gas: one of the three states of aggregation of matter, having neither independent shape nor volume and tending to expand indefinitely.

gas chromatography: a separation technique for organic compounds wherein the stationary phase is a solid, liquid coated on a solid, or liquid coated or bonded to the interior column wall (capillary column) and the mobile phase is an inert gas.

gas meter: an instrument for measuring the quantity of a gas passing through the meter.

gasometer: an apparatus employing a calibrated volume which is used to calibrate gas-measuring devices.

grab sample: see sampling, instantaneous.

gustiness: now referred to as intensity of turbulence which is defined as the ratio of the root mean square of wind velocity fluctuations to the mean wind velocity.

Hall electrolytic conductivity detector (HECD): a detector device for gas chromatography which responses selectively to halogenated, sulfur containing compounds, or nitrogen containing compounds (depending on operating mode selected).

halogenated compound: a compound containing chlorine, bromine, or iodine (chlorinated compounds being the most commonly encountered in ambient air).

high performance liquid chromatography: a separation technique wherein the mobile phase is a liquid and the stationary phase is a solid, usually having a particle diameter of 10 μm or less. HPLC is similar to column chromatography except that small particle diameter stationary phases and high pressures are used to achieve faster analysis and greater resolution.

impaction: a forcible contact of particles of matter, a term often used synonymously with impingement.

impactor: a sampling device that employs the principle of impaction (impingement). The "cascade impactor" refers to a specific instrument which employs several impactions in series to collect successively smaller sizes of particles.

impingement: the act of bringing matter forcibly in contact. As used in air sampling, impingement refers to a process for the collection of particulate matter in which the gas being sampled is directed forcibly against a surface.

impingement, dry: the process of impingement carried out so that particular matter carried in the gas stream is retained upon the surface against which the stream is directed. The collecting surface may be treated with a film of adhesive.

impingement, wet: the process of impingement carried out within a body of liquid, the latter serving to retain the particulate matter.

impinger: see bubbler.

internal standard: a known quantity of a reference compound added to a collected sample for use in the quantification of other compounds.

inversion: a reversal of the normal atmospheric temperature gradient, thus an increase of temperature of the air with increasing altitude.

ionic or ionizable compound: a compound which dissociates in water to give ionic species (i.e., acidic or basic compounds).

isokinetic: a term describing a condition of sampling, in which the flow of gas into the sampling device (at the opening or face of the inlet) has the same flow rate and direction as the ambient atmosphere being sampled.

lapse rate: the rate of change of the absolute value of any meteorological element with increase of height. (When used without modifier, it refers to the rate of decrease of temperature with increase of height).

mass concentration: concentration expressed in terms of mass of substance per unit volume of gas or liquid.

mass spectroscopy: a widely used analytical instrument capable of identifying and quantitifying organic materials on the basis of the mass fragmentation pattern. Most commonly used for organic analysis in combination with gas chromotography (i.e., GC-MS).

mass median size: a measurement of particle size for samples of particulate matter, consisting of that diameter such that the mass of all larger particles is equal to the mass of all smaller particles.

meteorology: the science dealing with the atmosphere and weather conditions.

micro-climatology: the science that deals with the climate of restricted areas and investigates their phenomena and causes.

micro-meteorology: the study of the meteorological characteristics of a local site that is usually small and often is confined to a shallow layer of air next to the ground.

mist: liquid, usually water in the form of particles suspended in the atmosphere at or near the surface of the earth; small water droplets floating or falling, approaching the form of rain, and sometimes distinguished from fog as being more transparent or as having particles perceptibly moving downward.

mobile phase: in chromatography, the separation medium which is in motion.

month: for reporting analyses of outdoor air on a monthly rate results are calculated to a base of thirty days.

neutral compound: a compound which does not ionize in water (e.g. not acidic or basic).

nitrogen-phosphorous detector (NPD): a detection device for gas chromatography which is sensitive and selective for nitrogen- and phosphorous-containing organic compounds.

opacity rating: a measurement of the opacity of emissions, defined as the apparent obscuration of an observer's vision to a degree equal to the apparent obscuration of smoke of a given rating on the Ringelmann Chart.

orifice meter: a flowmeter, employing as the measure of flow rate the difference between the pressures measured on the upstream and downstream sides of the orifice (that is, the pressure differential across the orifice) in the conveying pipe or duct.

particle: a small discrete mass of solid or liquid matter.

particle concentrations: concentration expressed in terms of number of particles per unit volume of air or other gas.
Note - On expressing particle concentration the method of determining the concentration should be stated.

particle fall: a measurement of air contamination consisting of the mass rate at which solid particles deposit from the atmosphere. A term used in the same sense as the older terms dust fall and soot fall but without any amplication as to nature and source of the particles.

particle size: an expression for the size of liquid or solid particles expressed as the average or equivalent diameter.

particle size distribution: the relative percentage by weight or number of each of the different size fractions of particulate matter.

particulate: solids or liquids existing in the form of separate particles.

phase distribution: the relative amounts of compound associated with the particle and gas phases in the atmosphere.

photochemical reaction: any chemical reaction that is initiated as a result of absorption of light.

photochemical smog: a type of air pollution resulting from photochemical reactions.

photoionization detector (PID): a detection device for gas chromatography which detects aromatic, halogenated, and olefinic compounds but is relatively insensitive for aliphatic compounds. The selectivity can be adjusted by the choice of lamp energy.

ppb: a unit of measure of the concentration of gases in air expressed as parts of the gas per billion (10^9) parts of the air-gas mixture, normally both by volume (ppbv).

ppm: a unit of measure of the concentration of gases in air expressed as parts of the gas per million parts of the air-gas mixture, normally both by volume (ppmv).

precipitation, electrostatic: a process consisting of the separation of particulate matter from air or other gases under the influence of an electrostatic field.

precipitation, meteorological: the precipitation of water from the atmosphere in the form of hail, mist, rain, sleet and snow. Deposits of dew, fog and frost are excluded.

precipitation, thermal: a process consisting of the separation of particulate matter from air and other gases under the influence of a relatively large temperature gradient extending over a short distance. In the "Thermal Precipitator" (a sampling instrument), the air or gas is drawn slowly through a narrow chamber across which extends a heated wire, particulate matter being deposited upon the adjacent collecting surface.

precipitation, ultrasonic: a process consisting of the separation of particulate matter from air and other gases following agglomeration induced by an ultrasonic field.

precipitator, electrostatic: apparatus employing electrostatic precipitation for the separation of particles from a gas stream. The apparatus may be designed either for sampling or for cleaning large volumes of gas.

precision: the degree of agreement of repeated measurements of the same property, expressed in terms of dispersion of test results about the mean result obtained by repetitive testing of a homogeneous sample under specified conditions. The precision of a method is expressed quantitatively as the standard deviation computed from the results of a series of controlled determinations.

pressure, gage: the difference in pressure existing within a system and that of the atmosphere. Zero gage pressure is equal to atmospheric pressure.

pressure, static: the pressure of a fluid at rest, or in motion, exerted perpendicularly to the direction of flow.

pressure, total: the pressure representing the sum of static pressure and velocity pressure at the point of measurement.

pressure, velocity: that pressure caused by and related to the velocity of the flow of fluid; a measure of the kinetic energy of the fluid.

probe: a tube used for sampling or for measuring pressures at a distance from the actual collection or measuring apparatus. It is commonly used for reaching inside stacks and ducts.

quality assurance: a system of activities designed to provide assurance that the quality control system is performing adequately.

quality control: a system of specific efforts designed to test and control the quality of the data obtained.

radiosonde: a miniature radio transmitter with instruments that is carried aloft (as by an unmanned balloon) for broadcasting by means of precise tone signals or other suitable method the humidity, temperature, pressure, or other parameter every few seconds.

resin: a porous polymer adsorbent such as Tenax^{R} for collection of gas phase organic compounds.

rotometer: a device, based on the principle of Stoke's law, for measuring rate of fluid flow. It consists of a tapered vertical tube having a circular cross section, and containing a float that is free to move in a vertical path to a height dependent upon the rate of fluid flow upward through the tube.

sample, cumulative: a sample obtained over a period of time with (1) the collected atmosphere being retained in a single vessel, or (2) with a separated component accumulating into a single whole. Examples are dust sampling in which all the dust separated from the air is accumulated in one mass of fluid: the absorption of acid gas in an alkaline solution; and collection of air in a plastic bag or gasometer. Such a sample does not reflect variations in concentration during the period of sampling.

sample, running: withdrawal of a portion of the atmosphere over a period of time with continuous analysis or with separation of the desired material continuously and in a "linear" form. Examples are continuous withdrawal of the atmosphere accompanied by absorption of a component in a flowing stream of absorbent or by filtration in a

moving strip of paper. Such a sample may be obtained with a considerable concentration of the contaminant but it still indicates fluctuations in concentration which occur during the period of sampling.

sampling: a process consisting of the withdrawal or isolation of a fractional part of a whole. In air or gas analysis, the separation of a portion of an ambient atmosphere with or without the simultaneous isolation of selected components.

sampling, condensation: a process consisting of the collection of one or several components of a gaseous mixture by simple cooling of the gas stream in a device which retains the condensate.

sampling, continuous: sampling without interruptions throughout an operation or for a predetermined time.

sampling, instantaneous: obtaining a sample of an atmosphere in a very short period of time such that this sampling time is insignificant in comparison with the duration of the operation or the period being studied.

sampling, intermittent: sampling successively for limited period of time throughout an operation or for a predetermined operiod of time. The duration of sampling periods and of the intervals between are not necessarily regular and are not specified.

sampling, source: withdrawal, with or without simultaneous isolation of specific components, of a portion of the offgases from a source of pollutants. Sometimes referred to as stack sampling when withdrawal is from a chimney, duct, or stack.

sampling train: the assemblage of equipment necessary to sample atmospheres.

scrubber: a type of apparatus used in sampling and in gas cleaning in which the gas is passed through a space containing wetted "packing" or spray.

sensor: a device designed to respond to a physical stimulus (as temperature, illumination, and motion) and transmit a resulting signal for interpretation, or measurement, or for operating a control.

series collection: an operation involving the use of two or more collectors joined in series.

settling velocity: the terminal rate of fall of a particle through a fluid as induced by gravity or other external force; the rate at which frictional drag balances the accelerating force (or the external force).

smog: a term derived from smoke and fog, applied to extensive atmospheric contamination by aerosols, these aerosols arising partly through natural processes and partly from the activities of human subjects. Now sometimes used loosely for any contamination of the air.

smoke: small gas-borne particles resulting from incomplete combustion, consisting predominantly of carbon and other combustible material, and present in sufficient quantity to be observable independently of the presence of other solids.

soot: agglomerations of particles of carbon impregnated with "tar", formed in the incomplete combustion of carbonaceous material.

sorbent: a liquid or solid medium in or upon which materials are retained by absorption or adsorption.

Soxhlet apparatus: an apparatus for use in extracting fatty or other material with a volatile solvent (as ether, alcohol, or benzene) in which the solvent is recirculated by evaporation and subsequent condensation.

specific gravity: the ratio of the density of the substance in question to the density of a reference substance at specified conditions of temperature and pressure.

spectrometry: a method of identification of a compound by identification of the spectrum produced.

spectrophotometry: a method for identification of substances and determination of their concentration by measuring light transmittance in different parts of the spectrum.

standard operating procedures (SOP): a detailed description of the operation of a sampling or analysis system for a specific application.

stationary phase: in chromatography, the separation medium which is held fixed.

temperature, absolute: (a) temperature measured on the thermodynamic scale, designated as Kelvin (K). (b) temperature measured from absolute zero (-273.18 C or -459.58 F). The numerical values are the same for both the Kelvin scale and the ideal gas scale.

Tenax^{R}: a polyphenyloxide polymer prepared as a porous adsorbent for determination of gas phase organic compounds. The relatively good thermal stability of Tenax^{R} allows recovery of adsorbed organics by thermal desorption.

thermionic detector: see nitrogen-phosphorus detector.

thin layer chromatography (TLC): a chromatographic technique wherein the stationary phase is a solid coated as a thin layer on a glass plate and the mobile phase is a liquid. The technique is commonly used for the determination of polynuclear aromatic hydrocarbons, using fluorescence detection.

validation, data: a systematic effort to review data to identify outliers or errors and thereby cause deletion or flagging of suspect values to assure the validity of the data for the user.

validation, method: the process of documenting the performance characteristics of a method through the analysis of blanks and replicate samples of known analyte concentration. The analyte concentrations tested should cover the range likely to be encountered in the actual monitoring situation.

vapor: the gaseous phase of matter that normally exists in a liquid or solid state.

volume concentration: concentration expressed in terms of gaseous volume of substance per unit volume of air or other gas usually expressed in parts per million (ppmv) or parts per billion (ppbv).

year: for reporting analyses of outdoor air on a yearly rate twelve 30-day months are to be used.

TOPIC INDEX

	Pages
Adsorbents, solid	38-41
Calibration techniques	96-98
Centrifugal collection	46-47
Chemiluminescence detection	55
Classes of organic compounds, definition	76-80
Colorimetric detection	52, 56
Column chromatography	74
Cryogenic trapping	41-42
Data reporting	35, 100-102
Derivatization techniques	43-44
Electron capture detection	54, 62-65
Electrostatic precipitation	47
Filtration	44-46
Flame ionization detection	53, 62-65
Flame photometric detection	55, 62-65
Fluorescence spectroscopy	58
Gas chromatography (GC)	58-68
Gas chromatography-mass spectroscopy (GC-MS)	68-71
High performance liquid chromatography (HPLC)	71-74
Infrared spectroscopy	53, 56

	Pages
Impingers	42
Impaction	46-47
Ionization devices	53-54
Mass spectrometry, low resolution	58
Meteorology	17
Monitoring objectives, definition	8-18
Photoionization detection	53-54, 62-65
Photometric detection devices	55
Quality assurance	27-35, 97-102
Quality control, routine	98-100
Regulatory background	4-7
Safety considerations	35-36
Sampling and analyses methods, literature sources	18
Sampling and analysis methods, selection process	18-24
Sampling and analysis, specific methods	74-94
Sampling methods, gas phase components	37-44
Sampling methods, particle bound components	44-47
Sampling strategy, selection of	24-26
Screening techniques, field	49-56
Screening technique, laboratory	56-58
Spectroscopic devices	53, 74
Thin layer chromatography	74
Ultraviolet/visible spectroscopy	53, 74
Whole air collection	42-43