United States
Environmental Protection
Agency

Environmental Monitoring Systems
Laboratory
Las Vegas NV 89114

EPA-600/4-83-040
September 1983

Research and Development

EPA

Characterization of Hazardous Waste Sites—A Methods Manual:

Volume II. Available Sampling Methods

EPA-600/4-83-040
September 1983

CHARACTERIZATION OF HAZARDOUS WASTE SITES--A METHODS MANUAL
VOLUME II
AVAILABLE SAMPLING METHODS

by

Patrick J. Ford
Paul J. Turina
Douglas E. Seely
GCA CORPORATION
GCA/TECHNOLOGY DIVISION
Bedford, Massachusetts 01730

Prepared for

Lockheed Engineering and Management
Services Company, Inc.
Las Vegas, Nevada, 89114

Under

EPA Contract No. 68-03-3050

EPA Project Officer

Charles K. Fitzsimmons
Advanced Monitoring Systems Division
Environmental Monitoring System Laboratory
Las Vegas, Nevada 89114

U.S. Environmental Protection Agency
Region 5, Library (PL-12J)
77 West Jackson Boulevard, 12th Floor
Chicago, IL 60604-3590

ENVIRONMENTAL MONITORING SYSTEMS LABORATORY
OFFICE OF RESEARCH AND DEVELOPMENT
U.S. ENVIRONMENTAL PROTECTION AGENCY
LAS VEGAS, NEVADA 89114

U.S. Environmental Protection Agency
Region 5, Library (PL-12J)
77 West Jackson Boulevard, 12th Floor
Chicago, IL 60604-3590

NOTICE

The information in this document has been funded wholly or in part by the United States Environmental Protection Agency under contract number 68-03-3050 to Lockheed Engineering and Management Services Company, Inc. and subcontract to GCA Corporation/Technology Division. It has been subject to the Agency's peer and administrative review, and it has been approved for publication. Mention of trade names or commercial products does not constitute endorsement or recommendation for use.

ABSTRACT

Investigations at hazardous waste and environment-threatening spill sites inevitably require that onsite measurements and sampling activities be conducted in order to assess the type and extent of contamination present. Due to the nature of sites and materials under investigation, however, not all sampling and measurement procedures may be applicable. It is important, therefore, that personnel involved in hazardous waste investigations be aware of the sampling procedures and measurement techniques most suited to their needs.

This document is dedicated to sampling procedures and information, its purpose being to present a compilation of methods and materials suitable to address most needs that arise during routine waste site and hazardous spill investigations. It is part of a multivolume manual entitled, Characterization of Hazardous Waste Sites - A Methods Manual, developed by the U.S. Environmental Protection Agency to serve a wide variety of users as a source of information, methods, materials and references on the subject.

CONTENTS

CONTENTS (continued)

CONTENTS (continued)

FIGURES

FIGURES (continued)

TABLES

SECTION 1

INTRODUCTION

PURPOSE

This document is part of a multivolume manual, entitled Characterization of Hazardous Waste Sites--A Methods Manual, developed by the U.S. Environmental Protection Agency. It is intended to serve a wide variety of users as a source of information, with references, on the methods and materials needed to characterize hazardous waste sites.

This Volume II--Available Sampling Methods is meant to be used in conjunction with Volumes I, III, IV and V and is purposely dedicated to sampling procedures and sampling information only. The intent is to describe a collection of methods and materials sufficient to address most sampling situations that arise during routine waste site and hazardous spill investigations. It is by no means a panacea and will be updated periodically as new information and improved methods become available. It includes a compilation of methods, the purpose being to supply detailed, practical information directed at providing field investigators with a set of functional operating procedures.

Volume I--Integrated Approach to Hazardous Waste Site Characterization includes discussions on preliminary assessment, initial data evaluation, administrative procedures, offsite reconnaissance, site inspection, chain of custody, quality assurance, safety and training in addition to considerations concerning sampling strategy and methods selection. Volume III--Available Laboratory Analytical Methods outlines detailed methodology suitable for hazardous waste analysis and is organized by media and compound. Volume IV--Safety will address safety aspects of hazardous waste sampling and handling.

GENERAL

Investigations at hazardous waste and environment-threatening spill sites place more restrictive demands on personnel, materials and methodologies than those usually found in routine environmental surveys. As a result, traditional procedures and protocols used for the acquisition of environmental samples often fail to meet the rigors and demands required for many hazardous waste sampling applications. Thus, the collection of hazardous waste samples will frequently require specialized equipment and protocols either developed specifically for such uses or modified from preexisting materials and/or techniques. Some important considerations are:

- Methods and materials must be suitable to a wide range of situations and applications because of the unknown nature of many hazardous waste investigations and environmental spill responses.

- Hazardous wastes, by definition, are associated with both acute and chronic exposure to dangerous, toxic chemicals and this dictates that expeditious sample collection methods be used to minimize personnel exposure.

- Because of the nature of the materials being sampled, the option of using disposable sampling equipment must be considered because attempting cleanup efforts in the field can be impractical.

- Hazardous waste site investigations and response actions at environment-threatening spills generally require some level of hazard protection that may be cumbersome, limit the field of vision, or fatigue the sampler. Sample collection procedures must therefore be relatively simple to follow to expedite sample procurement and to reduce the chance of fatigue. Collection and monitoring equipment should be simple to operate, direct reading, and should not be unwieldy.

These and other factors associated with the procurement of hazardous waste samples need to be addressed in a compilation of practical, cost effective, and reliable methods and procedures capable of yielding representative samples for a diverse number of potential parameters and chemical matrices. These methods must be consonant with a variety of analytical considerations running the gamut from gross compatibility analyses (pH, flammability, water reactivity, etc.) to highly sophisticated techniques capable of resolution in the part per billion (ppb) range.

METHOD SELECTION CRITERIA

Even a limited literature survey will disclose the existence of a great number of sampling methods, all of which have certain merits that warrant consideration. Therefore, selection criteria were chosen on which to base decisions for including the sampling methods found in this manual. The following is a listing, not necessarily in order of relative importance, of these criteria.

Practicality

The selected methods should stress the use of simple, pragmatic, proven procedures capable of being used or easily adapted to a variety of situations.

Representativeness

The essence of any sampling campaign is to collect samples that are representative of the material or medium under consideration. The selected methods, although strongly taking into consideration economics, simplicity, practicality, and portability, must also be capable of delivering a true representation of the situation under investigation.

Economics

The costs of equipment, manpower and operational maintenance need to be considered in relation to overall benefit. Instrument durability, disposable equipment, cost of decontamination, and degree of precision and accuracy actually required are also factors to be considered.

Simplicity or Ease of Operation

Because of the nature of the material to be sampled, the hazards encountered during sampling, and the cumbersome safety equipment sometimes required, the sampling procedures selected must be relatively easy to follow and equipment simple to operate. Equipment should be portable, lightweight, rugged and, if possible, direct reading.

Compatability with Analytical Considerations

The uncertainty of sample integrity as it relates to the analytical techniques to be used should be reduced whenever possible. Errors induced by poorly selected sampling techniques, especially those used in uncontrolled situations, can be the weakest link in the quality of the generated data. Special consideration must therefore be given to the selection of sampling methods in relation to any adverse effects that might surface during analysis. Proper materials of construction, sample or species loss, and chemical reactivity are some of the factors that must receive attention.

Versatility

The diversity and sheer numbers of potential parameters and scenarios often preclude the use of novel approaches that are designed or better suited for classifying a small number of compounds in a limited, defined environment. The methods in question must be adaptable to a variety of sampling situations and chemical matrices. This factor should not, however, jeopardize sample integrity.

Safety

The risk to sampling personnel, intrinsic safety of instrumentation, and safety equipment required for conducting the sampling all need to be evaluated in relation to the selection of proper methods and procedures.

The above criteria were consulted during the selection of each of the methods listed in the following sections. Obviously, tradeoffs were necessary, and therefore, some methods may prove excellent for some situations and less satisfactory for others. This factor must be considered by any field investigator before using the procedures outlined here.

PURPOSE AND OBJECTIVES OF SAMPLING

The basic objective of any sampling program is to produce a set of samples representative of the source under investigation and suitable for subsequent analysis. More specifically, the objective of sampling hazardous

wastes is to acquire information that will assist investigators in identifying unknown compounds present and to assess the extent to which these compounds have become integrated into the surrounding environment. Subsequently, this acquired information may be used in future litigations as well as to assist investigators in the development of remedial actions.

The term "sample" can most simply be defined as a representative part of the object to be analyzed. This definition needs to be qualified further, however, by the consideration of several criteria.

Of utmost importance is representativeness. To meet the requirement of representativeness, the sample needs to be chosen so that it possesses the same qualities or properties as the material under consideration. However, the sample needs only resemble the material to the degree determined by the desired qualities under investigation and the analytical techniques used.

Sample size is also an important criterion to be considered. Sample size must be carefully chosen with respect to the physical properties of the entire object and the requirements and/or limitations of the analytical procedure. For example, although the entire contents of an intact 55-gallon drum can certainly be considered a representative sample of the drum material, it is an impractical sample because of its bulk. Alternatively, too small a sample size can be just as limiting, since representativeness and analytical volume requirements might be jeopardized.

A third criterion for consideration is maintenance of sample integrity. The sample must retain the properties of the parent object (at the time of sampling) through collection, transport, and delivery to the analyst. Degradation or alteration of the sample through exposure to air, excess heat or cold, microorganisms, or to contaminants from the container must be avoided.

Finally, the number and/or the frequency of subsamples (e.g., samples making up a composite) required and the distribution of these subsamples need to be considered. These criteria are often dictated by the nature of the material being sampled; that is, whether the material is homogeneous or heterogeneous. For example, if a material is known to be homogeneous, a single sample may suffice to define its quality. However, if a sample is heterogeneous, a number of samples collected at specified time intervals or distances may be necessary to define the characteristics of the subject materials. In addition, the nature of the chemical parameters to be identified and the way the analytical results will be used are also important when the number and/or frequency of the samples to be collected are determined.

TYPES OF SAMPLES

Before defining the general sample types, the nature of the object or materials under investigation must be discussed. Materials can be divided into three basic groups as outlined in Figure 1.[1]

Material

- Homogeneous
  No change of quality throughout the material
- Heterogeneous
  - Discrete
    Change of quality throughout the material
  - Continuous
    Change of quality throughout the material

Homogeneous	Discrete Changes	Continuous Changes
Well-mixed liquids	Ore pellets	Fluids or gases with gradients
Well-mixed gases	Tablets	Mixture of reacting compounds
Pure metals	Crystallized rocks	Granulated materials with granules much smaller than sample size
	Suspensions	

Source: Reference 1.

Figure 1. Types of material.

Of least concern to the sampler are homogeneous materials. These materials are generally defined as having uniform composition throughout. In this case, any sample increment can be considered representative of the material. On the other hand, heterogeneous samples present problems to the sampler because of changes in the quality of the material over distance.

When discussing types of samples, it is important to distinguish between the type of media to be sampled and the sampling technique that yields a specific type of sample. In relation to the media to be sampled, two basic types of samples can be considered: the environmental sample and the hazardous sample.

Environmental samples (ambient air, soils, rivers, streams, or biota) are generally dilute (in terms of pollutant concentration) and usually do not require the special handling procedures used for concentrated wastes. However, in certain instances, environmental samples can contain elevated concentrations of pollutants and in such cases would have to be handled as hazardous samples.

Hazardous or concentrated samples are those collected from drums, tanks, lagoons, pits, waste piles, fresh spills, etc., and require special handling procedures because of their potential toxicity or hazard. These samples can be further subdivided based on their degree of hazard; however, care should be taken when handling and shipping any wastes believed to be concentrated, regardless of the degree.

In general, two basic types of sampling techniques are recognized, both of which can be used for either environmental or concentrated samples.

Grab Samples

A grab sample is defined as a discrete aliquot representative of a specific location at a given point in time. The sample is collected all at once and at one particular point in the sample medium. The representativeness of such samples is defined by the nature of the materials being sampled. In general, as sources vary over time and distance, the representativeness of grab samples will decrease.

Composite Samples

Composites are nondiscrete samples composed of more than one specific aliquot collected at various sampling locations and/or different points in time. Analysis of this type of sample produces an average value and can in certain instances be used as an alternative to analyzing a number of individual grab samples and calculating an average value. It should be noted, however, that compositing can mask problems by diluting isolated concentrations of some hazardous compounds below detection limits.

For sampling situations involving hazardous wastes, grab sampling techniques are generally preferred because grab sampling minimizes the amount of time sampling personnel must be in contact with the wastes, reduces risks associated with compositing unknowns, and eliminates chemical changes that

might occur due to compositing. Compositing is still often used for environmental samples and may be used for hazardous samples under certain conditions. For example, compositing of hazardous waste is often performed (after compatibility tests have been completed) to determine an average value over a number of different locations (group of drums). This procedure provides data that can be useful by providing an average concentration within a number of units, can serve to keep analytical costs down and can provide information useful to transporters and waste disposal operations.

SAMPLING PLAN

Before any sampling activities are begun, it is imperative that the purpose and goals of a program and the equipment, methodologies, and logistics to be used during the actual sampling be identified in the form of a work or sampling plan. This plan is developed when it becomes evident that a field investigation is necessary and should be initiated in conjunction with or immediately following the preliminary assessment. This plan should be clear and concise and should detail the following basic components:

- background information collected during the preliminary assessment;
- objectives and goals of the investigation;
- sampling methods to be used, including equipment needs, procedures, sample containment, and preservation;
- justification for selected methods and procedures;
- sample locations, as well as, number and types of samples to be collected at each;
- organization of the investigative team;
- safety plan (includes safety equipment and decontamination procedures, etc.);
- transportation and shipping information;
- training information; and
- additional site-specific information or requirements.

Note that this list of sampling plan components is by no means all inclusive and that additional elements may be added or altered depending on the specific requirements of the field investigation. It should also be recognized that although a detailed sampling plan is quite important, it may be an impractical undertaking in some instances. Emergency responses to accidental spills would be a prime example of such an instance where time might prohibit the development of a site-specific sampling plan. In such a case, the investigator would have to rely on general guidelines and personal judgment, and the sampling or response plan might be simply a strategy based on preliminary information and finalized on site. In any event, a plan of

action needs to be developed, no matter how concise or informal, to aid investigators in maintaining a logical and consistent order to the implementation of their task. Planning and safety are discussed in detail in Volumes I, IV and V.

SAMPLING SCHEMES

The manner in which samples are selected generally falls into one of (or a combination of) the following categories.

Random Sampling

Random sampling uses the theory of random chance probabilities to choose representative sample locations. Random sampling is generally employed when little information exists concerning the material, location, etc. It is most effective when the population of available sampling locations is large enough to lend statistical validity to the random selection process. Since one of the main difficulties with random sampling deals with achieving a truly random sample, it is advisable to use a table of random numbers to eliminate or reduce bias (Appendix E).

Systematic Sampling

Systematic sampling involves the collection of samples at predetermined, regular intervals. It is the most often employed sampling scheme, however, care must be exercised to avoid bias; if, for example, there are periodic variations in the material to be sampled such that the systematic plan becomes partially phased with these variations.

A systematic sampling plan is often the end result for approaches that are initiated as random due to the tendency of investigators to subdivide a large sample area into increments prior to randomizing.

Stratified Sampling

Data and background information made available from the preliminary site survey, prior investigations conducted on site and/or experience with similar situations can be useful in reducing the number of samples needed to attain a specified precision. Stratified sampling essentially involves the division of the sample population into groups based on knowledge of sample characteristics at these divisions. The purpose of the approach is to increase the precision of the estimates made by sampling. This objective should be met if the divisions are "selected in such a manner that the units within each division are more homogeneous than the total population."[2] The procedure used basically involves handling each division in a simple random approach.

Judgment Sampling

A certain amount of judgment often enters into any sampling approach used; however, this practice should be avoided whenever possible, especially if the data generated are likely to be used for enforcement purposes. Judgment approaches tend to allow investigator bias to influence decisions,

and, if care is not exercised, can lead to poor quality data and improper conclusions. If judgment sampling does become necessary, it is advisable that multiple samples be collected in order to add some measure of precision.

Hybrid Sampling Schemes

In reality, most sampling schemes consist of a combination or hybrid of the types previously described. For example, when selecting an appropriate plan for sampling drums at a hazardous waste site, the drums might be initially staged based on preliminary information concerning contents, program objectives, etc. (judgment, stratified sampling), and then sampled randomly within the specified population groups (random sampling). Hybrid schemes are usually the method of choice as they can allow for greater diversity without compromising the objectives of the program.

MULTIPLE SAMPLES

Multiple samples need to be collected at any time legal action is anticipated. It is recommended that multiple samples be collected whenever possible. These additional samples are essential to any quality control aspects of the project and may also assist in reducing costs associated with resampling brought about by container breakage, errors in the analytical procedure, and data confirmation. The following is a list of the types of multiple samples required.

Sample Blanks

Sample blanks are samples of deionized/distilled water, rinsed collection devices or containers, sampling media (e.g., sorbent), etc. that are handled in the same manner as the sample and subsequently analyzed to identify possible sources of contamination during collection, preservation, handling, or transport.

Duplicates

Duplicates are essentially identical samples collected at the same time, in the same way, and contained, preserved, and transported in the same manner. These samples are often used to verify the reproducibility of the data.

Split Samples

Split samples are duplicate samples given to the owner, operator, or person in charge for separate analysis.

Spiked Samples

Spiked samples are duplicate samples that have a known amount of a substance of interest added to them. These samples are used to corroborate the accuracy of the analytical technique and could be used as an indicator of sample quality change during shipment to the laboratory.

DOCUMENT CONTROL/CHAIN-OF-CUSTODY

Strict adherence to document and data control procedures is essential from the standpoint of good quality assurance/quality control and should be instituted as routine in any hazardous waste investigation. It becomes especially important when collected data is used to support enforcement litigations. All collected information, data, samples, and documents, must therefore be accounted for and retrievable at any time during an investigation.

The purpose of document control is to ensure that all project documents be accounted for when the project is complete. Types of documents considered essential include maps, drawings, photographs, project work plans, quality assurance plans, serialized logbooks, data sheets, coding forms, confidential information, reports, etc.

Chain-of-custody procedures are necessary to document the sample identity, handling and shipping procedures, and in general to identify and assure the traceability of generated samples. Custody procedures trace the sample from collection, through any custody transfers, and finally to the analytical facility at which point internal laboratory procedures take over. Chain-of-custody is also necessary to document measures taken to prevent and/or detect tampering with samples, sampling equipment or the media to be sampled. A detailed description of Document Control/Chain-of-Custody Procedures can be found in Appendix D and in Volume I, Chapter 2.

SAFETY

Detailed safety considerations are adequately covered in Volume IV--Safety, and Volume I, Section 3, and should be carefully reviewed before engaging in any hazardous waste sampling endeavors. It is important, however, that safety be generally discussed at this time to provide a necessary reminder of the importance of taking proper, well-developed precautions when dealing with hazardous materials.

General Considerations

Field operations at sites containing hazardous substances pose potential threats which could adversely affect the life and health of individuals working onsite. Personnel performing any one of a number of tasks could be exposed to a variety of acute and/or chronic hazards unless proper precautions are taken prior to site entry. A comprehensive health and safety program must therefore be emplaced in any organization currently involved in, or soon to be associated with, onsite investigations of hazardous wastes.

In general, this program should include:

- a health surveillance program;
- an organizational safety program listing guidelines and standard operating procedures;

- training programs and refresher courses; and
- assignment of an organizational safety officer and/or officers.

In addition, a site-specific safety plan should be prepared that lists protective measures required to guard the field investigation team from site-specific hazards. This document should be drafted by the project team leader and safety officer using all available information concerning the site. It should include a designation of an onsite project coordinator (team leader) and a site safety officer and, in general, the proper chain-of-command to be followed when dealing with site-related matters. The site safety plan should also include a listing of all safety equipment needed and the level of protection necessary at all site areas; a reference of emergency information including phone numbers of hospitals, ambulance services, fire and police departments, etc.; directions to emergency facilities; and a reiteration of the organizations general safety policies.

SECTION 2

SOLIDS

GENERAL

The sampling of solid or semi-solid materials is complicated by the structural properties of the material. For example, the presence of entrapped gases and fluids is often an integral part of the substance and of consequence in the analytical techniques for which the sample was collected. It is necessary in most cases to collect a sample which does not alter this balance. In addition, physical strength and density of the material demand sampling devices of significant rigidity and strength. As a result a great deal of disturbance will occur at the sample-sampler interface. These effects can be reduced by careful sampling and by collecting aliquots with a high volume to surface area ratio.

A solid does not necessarily have uniform characteristics with respect to distance or depth. Those portions which form boundaries with the container, define the edges of a pile, or contact the atmosphere do not necessarily represent the material as a whole. Care must be exercised in order to prevent aeration or significant changes in moisture content. Samples should be tightly capped and protected from direct light. Since most solids are usually sampled in large quantities then returned to the laboratory for aliquoting and analysis, preservation can in most cases be limited to refrigeration.[2]

Most commercially available solids sampling devices are steel, brass or plastic. In general, use of stainless steel is the most practical and several manufacturers will fabricate their equipment with all stainless steel parts on a special order basis. Another alternative is to have sampler contact surfaces Teflon coated. This can be accomplished by either sending the device to a commercial coater or by in-house application of spray-on Teflon coatings. Some devices, especially those for soil sampling, have traditionally been chrome- or nickel-plated steel. These should be particularly avoided or the plating should be removed since scratches and flaking of the plating can drastically effect the results of trace element analysis.

This section is further divided into three subsections addressing the sampling of soils, sludge and sediments, and bulk materials.

SOILS

Soil sampling is an important adjunct to groundwater monitoring. Sampling of the soil horizons above the groundwater table can detect contaminants before they have migrated into the water table, and can help establish the amount of contamination sorbed on aquifer solids that have the potential of contributing to the groundwater contamination.

Soil types can vary considerably on a hazardous waste site. These variations, along with vegetation, can effect the rate of contaminant migration through the soil. It is important, therefore, that a detailed record be maintained during sampling operations, particularly of location, depth, and such characteristics as grain size, color and odor. Subsurface conditions are often stable on a daily basis and may demonstrate only slight seasonal variation especially with respect to temperature, available oxygen and light penetration. Changes in any of these conditions can radically alter the rate of chemical reactions or the associated microbiological community, thus further altering conditions. As a result samples should be kept at their at-depth temperature or lower, protected from direct light, sealed tightly in glass bottles and analyzed as soon as possible.

The physical properties of the soil, its grain size, cohesiveness, associated moisture and such factors as depth to bedrock and water table will limit the depth from which samples can be collected and the method required to collect them. Often this information on soil properties can be acquired from published soil surveys obtainable through the U.S. Geological Surveys and other government and farm agencies. A comprehensive listing of these offices and currently available soil surveys is included in the "NEIC Manual for Groundwater/Subsurface Investigations at Hazardous Waste Sites."[4] Most of the methods employed for soil sampling at hazardous waste sites are adaptations of techniques long employed by foundation engineers and geologists. This section presents those methods which can be employed with a minimum of special training, equipment or cost. More detailed methods capable of sampling to greater depths, in more difficult soil conditions, or that can simultaneously place groundwater monitor wells usually require professional assistance. These techniques are discussed more fully in the "Manual for Ground-water Sampling Procedures."[5]

Collection of samples from near the soil surface can be accomplished with tools such as spades, shovels, and scoops. With this type of readily available equipment the soil cover can be removed to the required depth; then a stainless steel scoop can be used to collect the sample. An undisturbed sample can be collected from this excavation by employing a thin wall tube sampler. This device is, as the name implies, a metal tube generally 2.5 to 7.5 cm in diameter and 30.5 to 61.0 cm long. The tube is forced into the soil, then extracted. Friction will usually hold the sample material in the tube during the extraction. The construction material is generally steel, and some samplers can utilize plastic liners and interchangable cutting tips. The liners are useful for trace element sampling but are generally not suitable for organic analysis due to the possibility that materials in the liner will leach out and become incorporated as part of the sample. The liner tubes can further be capped off and used as sample containers for transport to the lab.

Interchangeable cutting tips facilitate smoother penetration with reduced sample disturbance. They are available in various styles and construction suitable for moist, dry, sandy or heavy-duty applications. The design of these cutting tips will further aid in maintaining the sample in the tube during sample extraction.

Kits are available that include, in conjunction with the tube sampler and cutting tips, an auger point and a series of extension rods. These kits allow for hand augering a borehole. The auger can then be removed and a tube sampler lowered and forced into the soil at the completion depth. Though kits are available with sufficient tools to reach depths in excess of 7 meters, soil structure, impenetrable rock, and water levels usually prevent reaching such completion depths. Kits that include 1 meter of drill rod and the ability to order additional extensions will in practice prove satisfactory. The need for soil information at greater depths will normally require professional assistance. Consideration should be given to supplementing this information with groundwater monitoring since soil sampling can be conducted in conjunction with well completion.

For those wishing a more in-depth discussion of soils and soil sampling, refer to the Protocol for Soil Sampling: Techniques and Strategies, (in draft) by Dr. Benjamin J. Mason, prepared under contract to the U.S. Environmental Protection Agency, Environmental Montoring Systems Laboratory--Las Vegas (Contract No. CR808529-01-2), March 30, 1982. This report discusses in detail the factors that influence the selection of a particular sampling scheme or the use of a particular sampling method with a strong emphasis on statistical design and data anlysis.

METHOD II-1: SOIL SAMPLING WITH A SPADE AND SCOOP

Discussion

The simplest, most direct method of collecting soil samples for subsequent analysis is with the use of a spade and scoop. A normal lawn or garden spade can be utilized to remove the top cover of soil to the required depth and then a smaller stainless steel scoop can be used to collect the sample.

Uses

This method can be used in most soil types but is limited somewhat to sampling the near surface. Samples from depths greater than 50 cm become extremely labor intensive in most soil types. Very accurate, representative samples can be collected with this procedure depending on the care and precision demonstrated by the technician. The use of a flat, pointed mason trowel to cut a block of the desired soil will be of aid when undisturbed profiles are required. A stainless steel scoop or lab spoon will suffice in most other applications. Care should be exercised to avoid the use of devices plated with chrome or other materials. Plating is particularly common with garden implements such as potting trowels.

Procedures for Use

1. Carefully remove the top layer of soil to the desired sample depth with a spade.

2. Using a stainless steel scoop or trowel collect the desired quantity of soil.

3. Transfer sample into an appropriate sample bottle with a stainless steel lab spoon or equivalent.

4. Check that a Teflon liner is present in the cap if required. Secure the cap tightly. The chemical preservation of solids is generally not recommended. Refrigeration is usually the best approach supplemented by a minimal holding time.

5. Label the sample bottle with the appropriate sample tag. Be sure to label the tag carefully and clearly, addressing all the categories or parameters. Complete all chain-of-custody documents and record in the field log book.

6. Place the properly labeled sample bottle in an appropriate carrying container maintained at 4°C throughout the sampling and transportation period.

METHOD II-2: SUBSURFACE SOLID SAMPLING WITH AUGER AND THIN-WALL TUBE SAMPLER

Discussion

This system consists of an auger bit, a series of drill rods, a "T" handle, and a thin-wall tube corer (see Figure 2). The auger bit is used to bore a hole to the desired sampling depth and then withdrawn. The auger tip is then replaced with the tube corer, lowered down the borehole, and forced into the soil at the completion depth. The corer is then withdrawn and the sample collected.

Uses

This system can be used in a wide variety of soil conditions. It can be used to sample both from the surface, by simply driving the corer without preliminary boring, or to depths in excess of 6 meters. The presence of rock layers and the collapse of the borehole, however, usually prohibit sampling at depths in excess of 2 meters. Interchangable cutting tips on the corer reduce the disturbance to the soil during sampling and aid in maintaining the core in the device during removal from the borehole.

Procedures for Use

1. Attach the auger bit to a drill rod extension and further attach the "T" handle to the drill rod.

2. Clear the area to be sampled of any surface debris (twigs, rocks, litter). It may be advisable to remove the first 8 to 15 cm of surface soil for an area approximately 15 cm in radius around the drilling location.

3. Begin drilling, periodically removing accumulated soils. This prevents accidentally brushing loose material back down the borehole when removing the auger or adding drill rods.

4. After reaching desired depth, slowly and carefully remove auger from boring.

5. Remove auger tip from drill rods and replace with thin-wall tube sampler. Install proper cutting tip.

6. Carefully lower corer down borehole. Gradually force corer into soil. Care should be taken to avoid scraping the borehole sides. Hammering of the drill rods to facilitate coring should be avoided as the vibrations may cause the boring walls to collapse.

7. Remove corer and unscrew drill rods.

8. Remove cutting tip and remove core from device.

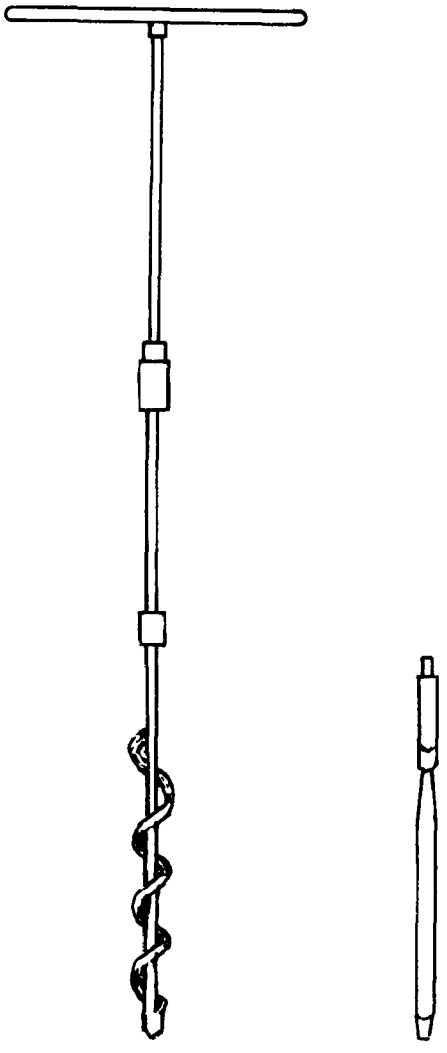

Figure 2. Auger and thin-wall tube sampler.

9. Discard top of core (approximately 2.5 cm), which represents any material collected by the corer before penetration of the layer in question. Place remaining core into sample container.

10. Check that a Teflon liner is present in the cap if required. Secure the cap tightly. The chemical preservation of solids is generally not recommended. Refrigeration is usually the best approach supplemented by a minimal holding time.

11. Label the sample bottle with the appropriate sample tag. Be sure to label the tag carefully and clearly, addressing all the categories or parameters. Complete all chain-of-custody documents and record in the field logbook.

12. Place the properly labeled sample bottle in an appropriate carrying container maintained at 4°C throughout the sampling and transportation period.

Sources

deVera, E.R., Simmons, B.P., Stephens, R.D., and Storm, D.L. "Samplers and Sampling Procedures for Hazardous Waste Streams." EPA 600/2-80-018, January 1980.

SLUDGES AND SEDIMENTS

In general and for the purpose of this manual, sludges will be defined as semi-dry materials ranging from dewatered solids to high viscosity liquids. Sediments are the deposited material underlying a body of water. On occasion they are exposed by evaporation, stream rerouting, or other means of water loss. In these instances they can be readily collected by soil or sludge collection methods.

Sludges can often be sampled by the use of a stainless steel scoop or trier. Frequently sludges form as a result of settling of the higher density components of a liquid. In this instance the sludge may still have a liquid layer above it. When the liquid layer is sufficiently shallow, the sludge may be scooped up by a device such as the pond sampler described in Section III, Method III-2, or preferably by using a thin-tube sampler as described in this section (see Method II-4). The latter is preferable as it results in less sample disturbance and will also collect an aliquot of the overlying liquid, thus preventing drying or excessive sample oxidation before analysis. Sludges which develop in 55-gallon drums can usually be collected by employing the glass tubes used for the liquid portion sample (Method III-5) as a thin-tube sampler. The frictional forces which hold the sludge in the tube can be supplemented by maintaining a seal above the tube. When the overlying layer is deep, a small gravity corer such as those used in limnological studies will be useful. Gravity corers, such as Phlegers, are easier to preclean and decontaminate than piston type corers.

If the sludge layer is shallow, less than 30 centimeters, corer penetration may damage the container liner or bottom. In this instance a Ponar or Eckman grab may be applicable, as grab samplers are generally capable of only a few centimeters of penetration. Of the two, Ponar grab samplers are more applicable to a wider range of sediments and sludges. They penetrate deeper and seal better than the spring-activated Eckman dredges, especially in granular substrates.

Sediments can be collected in much the same manner as described above for sludges; however, a number of additional factors must be considered. Streams, lakes, and impoundments, for instance, will likely demonstrate significant variations in sediment composition with respect to distance from inflows, discharges, or other disturbances. It is important, therefore, to document exact sampling location by means of triangulation with stable references on the banks of the stream or lake. In addition, the presence of rocks, debris, and organic material may complicate sampling and preclude the use of or require modification to some devices. Sampling of sediments should therefore be conducted to reflect these and other variants.

METHOD II-3: COLLECTION OF SLUDGE OR SEDIMENT SAMPLES WITH SCOOP

Discussion

Sludge and sediment samples are collected using the simple laboratory scoop or garden type trowel specified in Method II-1. This method is more applicable to sludges but it can be used for sediments provided the water depth is very shallow (a few centimeters). It should be noted, however, that this method can be disruptive to the water/sediment interface and might cause substantial alterations in sample integrity if extreme care is not exercised. The stainless steel laboratory scoop is generally recommended due to its noncorrosive nature. Single grab samples may be collected or, if the area in question is large, it can be divided into grids and multiple samples can be collected and composited.

Uses

This method provides for a simple, quick, and easy means of collecting a disturbed sample of a sludge or sediment.

Procedures for Use

1. Collect the necessary equipment and clean according to the requirements for the analytical parameters to be measured.

2. Sketch the sample area or note recognizable features for future reference.

3. Insert scoop or trowel into material and remove sample. In the case of sludges exposed to air, it may be desirable to remove the first 1-2 cm of material prior to collecting sample.

4. If compositing a series of grab samples, use a stainless steel mixing bowl or Teflon tray for mixing.

5. Transfer sample into an appropriate sample bottle with a stainless steel lab spoon or equivalent.

6. Check that a Teflon liner is present in cap if required. Secure the cap tightly. The chemical preservation of solids is generally not recommended. Refrigeration is usually the best approach supplemented by a minimal holding time.

7. Label the sample bottle with the appropriate sample tag. Be sure to label the tag carefully and clearly, addressing all the categories or parameters. Complete all chain-of-custody documents and record in the field logbook.

8. Place the properly labeled sample bottle in an appropriate carrying container maintained at 4°C throughout the sampling and transportation period.

METHOD II-4: SAMPLING SLUDGE OR SEDIMENTS WITH A HAND CORER

Discussion

This device is essentially the same type of thin-wall corer described for collecting soil samples (Method II-2). It is modified by the addition of a handle to facilitate driving the cover (see Figure 3) and a check valve on top to prevent washout during retrieval through an overlying water layer.

Uses

Hand corers are applicable to the same situations and materials as the scoop described in Method II-3. It has the advantage of collecting an undisturbed sample which can profile any stratification in the sample as a result of changes in the deposition.

Some hand corers can be fitted with extension handles which will allow the collection of samples underlying a shallow layer of liquid. Most corers can also be adapted to hold liners generally available in brass or polycarbonate plastic. Care should be taken to choose a material which will not compromise the intended analytical procedures.

Procedures for Use

1. Inspect the corer for proper precleaning.

2. Force corer in with smooth continuous motion.

3. Twist corer then withdraw in a single smooth motion.

4. Remove nosepiece and withdraw sample into a stainless steel or Teflon tray.

5. Transfer sample into an appropriate sample bottle with a stainless steel lab spoon or equivalent.

6. Check that a Teflon liner is present in cap if required. Secure the cap tightly. The chemical preservation of solids is generally not recommended. Refrigeration is usually the best approach supplemented by a minimal holding time.

7. Label the sample bottle with the appropriate sample tag. Be sure to label the tag carefully and clearly, addressing all the categories or parameters. Complete all chain-of-custody documents and record in the field logbook.

8. Place the properly labeled sample bottle in an appropriate carrying container maintained at 4°C throughout the sampling and transportation period.

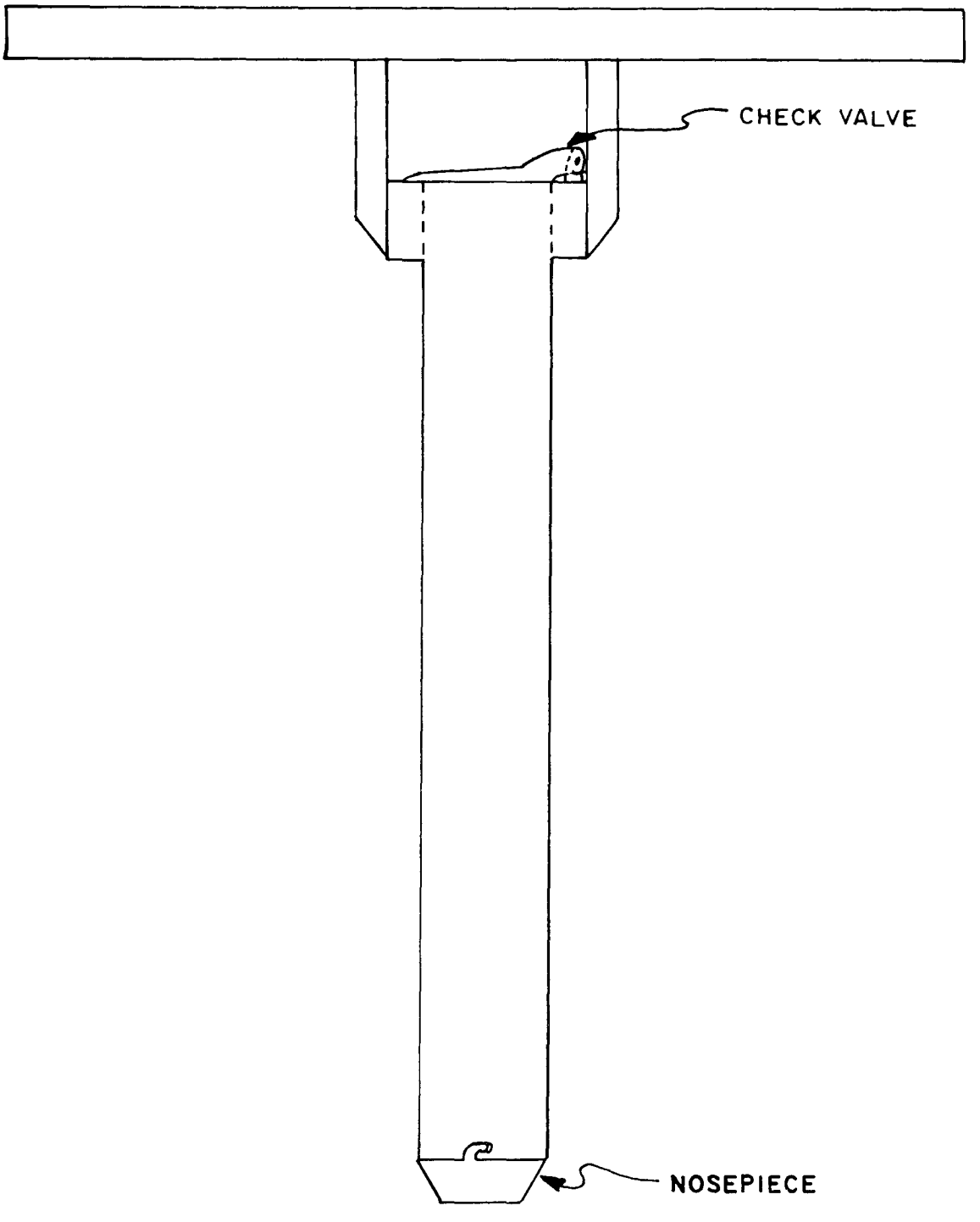

Figure 3. Hand corer.

METHOD II-5: SAMPLING BOTTOM SLUDGES OR SEDIMENTS WITH A GRAVITY CORER

Discussion

A gravity corer is a metal tube with a replaceable tapered nosepiece on the bottom and a ball or other type of check valve on the top. The check valve allows water to pass through the corer on descent but prevents washout during recovery. The tapered nosepiece facilitates cutting and reduces core disturbance during penetration.

Most corers are constructed of brass or steel and many can accept plastic liners and additional weights (see Figure 4).

Uses

Corers are capable of collecting samples of most sludges and sediments. They collect essentially undisturbed samples which represent the profile of strata which may develop in sediments and sludges during variations in the deposition process. Depending on the density of the substrate and the weight of the corer, penetration to depths of 75 cm (30 inches) can be attained.

Care should be exercised when using gravity corers in vessels or lagoons that have liners since penetration depths could exceed that of substrate and result in damage to the liner material.

Procedures for Use

1. Attach a precleaned corer to the required length of sample line. Solid braided 5 mm (3/16 inch) nylon line is sufficient; 20 mm (3/4 inch) nylon, however, is easier to grasp during hand hoisting.

2. Secure the free end of the line to a fixed support to prevent accidental loss of the corer.

3. Allow corer to free fall through liquid to bottom.

4. Retrieve corer with a smooth, continuous lifting motion. Do not bump corer as this may result in some sample loss.

5. Remove nosepiece from corer and slide sample out of corer into stainless steel or Teflon pan.

6. Transfer sample into appropriate sample bottle with a stainless steel lab spoon or equivalent.

7. Check that a Teflon liner is present in cap if required. Secure the cap tightly. The chemical preservation of solids is generally not recommended. Refrigeration is usually the best approach supplemented by a minimal holding time.

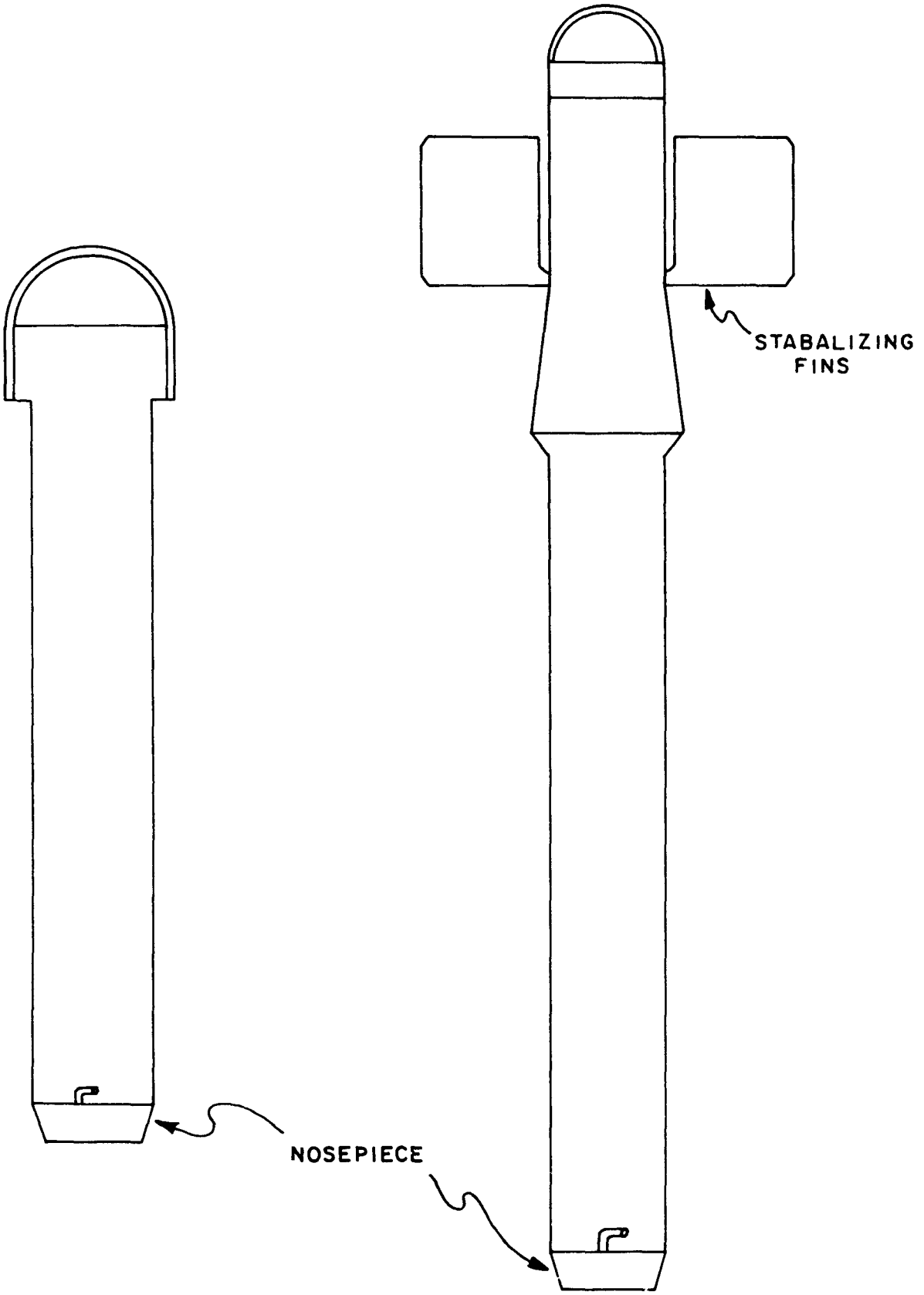

Figure 4. Gravity corers.

8. Label the sample bottle with the appropriate sample tag. Be sure to label the tag carefully and clearly, addressing all the categories or parameters. Complete all chain-of-custody documents and record in the field logbook.

9. Place the properly labeled sample bottle in an appropriate carrying container maintained at 4°C throughout the sampling and transportation period.

Sources

American Public Health Association. "Standard Methods for the Examination of Water and Wastewater" 14th Edition, Washington, D.C. 1975.

METHOD II-6: SAMPLING BOTTOM SLUDGES OR SEDIMENTS WITH A PONAR GRAB

Discussion

The Ponar grab is a clamshell type scoop activated by a counter lever system. The shell is opened and latched in place and slowly lowered to the bottom. When tension is released on the lowering cable the latch releases and the lifting action of the cable on the lever system closes the clamshell (see Figure 5).

Uses

Ponars are capable of sampling most types of sludges and sediments from silts to granular materials. They are available in a "Petite" version with a 232 square centimeter sample area that is light enough to be operated without a winch or crane. Penetration depths will usually not exceed several centimeters. Grab samplers, unlike the corers described in Method II-5, are not capable of collecting undisturbed samples. As a result, material in the first centimeter of sludge cannot be separated from that at lower depths. The sampling action of these devices causes agitation currents which may temporarily resuspend some settled solids. This disturbance can be minimized by slowly lowering the sampler the last half meter and allowing a very slow contact with the bottom. It is advisable, however, to only collect sludge or sediment samples after all overlying water samples have been obtained.

Procedures for Use

1. Attach a precleaned Ponar to the necessary length of sample line. Solid braided 5 mm (3/16 inch) nylon line is usually of sufficient strength; however, 20 mm (3/4 inch) or greater nylon line allows for easier hand hoisting.

2. Measure and mark the distance to bottom on the sample line. A secondary mark, 1 meter shallower, will indicate proximity so that lowering rate can be reduced, thus preventing unnecessary bottom disturbance.

3. Open sampler jaws until latched. From this point on, support sampler by its lift line or the sampler will be tripped and the jaws will close.

4. Tie free end of sample line to fixed support to prevent accidental loss of sampler.

5. Begin lowering the sampler until the proximity mark is reached.

6. Slow rate of descent through last meter until contact is felt.

7. Allow sample line to slack several centimeters. In strong currents more slack may be necessary to release mechanism.

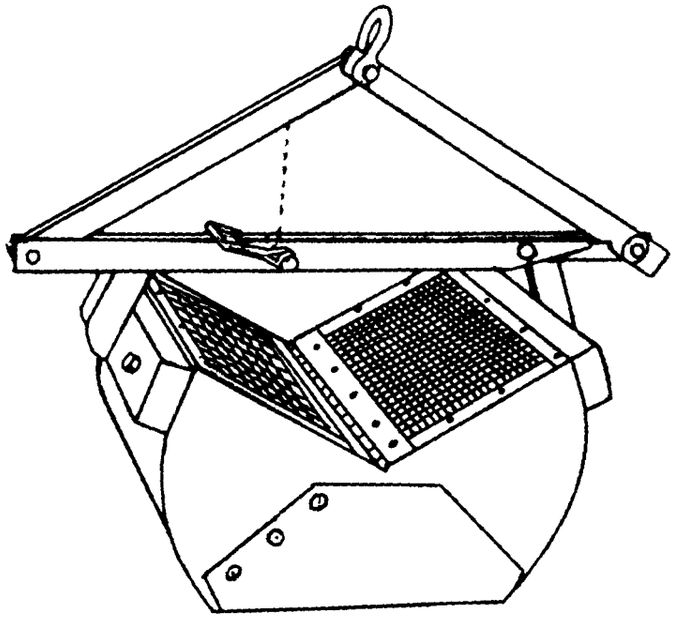

Figure 5. Ponar grab.

8. Slowly raise dredge clear of surface.

9. Place Ponar into a stainless steel or Teflon tray and open. Lift Ponar clear of the tray and return to lab for decontamination.

10. Collect a suitable aliquot with a stainless steel lab spoon or equivalent and place sample into appropriate sample bottle.

11. Check for a Teflon liner in cap if required and secure cap tightly. The chemical preservation of solids is generally not recommended. Refrigeration is usually the best approach supplemented by a minimal holding time.

12. Label the sample bottle with the appropriate sample tag. Be sure to label the tag carefully and clearly, addressing all the categories or parameters. Complete all chain-of-custody documents and record in the field logbook.

13. Place the properly labeled sample bottle in an appropriate carrying container maintained at 4°C throughout the sampling and transportation period.

Sources

American Public Health Association. "Standard Methods for the Examination of Water and Wastewater" 14th Edition, American Public Health Association, Washington, D.C. 1975.

Lind, Owen T. "Handbook of Common Methods in Limnology." C.V. Mosby Company, St. Louis, 1974.

BULK MATERIALS

Unlike soils which are heterogeneous associations of earthen and manufactured substances, bulk materials are generally a homogeneous collection of a single identifiable product. They are usually contained in bags, drums or hoppers although on occasion large amounts of the material may be piled directly on the ground, either deliberately or as the result of a spill.

Those surfaces exposed to the atmosphere may undergo some chemical alteration or degradation and should be avoided during sample collection. Since the process producing the bulk material may demonstrate some variation with respect to time, it is advisable to collect a series of samples as one composite to represent the material.

Bulk materials in an unconsolidated state may be readily collected by a stainless steel scoop. When the amount of the material is large, a composite can be collected by the use of a grain thief (see Figure 7). This device is essentially a long hollow tube with evenly spaced openings along its length. This tube is placed inside an outer sleeve with similar openings and forced into the material. The inner sleeve is rotated until its openings align with those on the outer sleeve, thus allowing the material to enter. The inner sleeve is then further rotated sealing the openings, the device is withdrawn, and the sample recovered.

Grain thiefs are available in many materials including brass and various plastics. As with other sampling devices, care should be taken to choose a construction material which will not compromise the desired analytical results.

A more detailed treatment of this subject (Bulk Materials) can be found in The Sampling of Bulk Materials by R. Smith and G. V. James, The Royal Society of Chemistry, London (1981). Although this book does not deal specifically with hazardous waste sampling, the concepts discussed, especially on the subject of the establishment of a sampling scheme, are readily applicable.

METHOD II-7: SAMPLING OF BULK MATERIAL WITH A SCOOP OR TRIER

Discussion

A typical sampling trier (Figure 6) is a long tube with a slot that extends almost its entire length. The tip and edges of the tube slot are sharpened to allow the trier to cut a core of the material to be sampled when rotated after insertion into the material. Sampling triers are usually made of stainless steel with wooden handles. They are about 61 to 100 cm long and 1.27 to 2.54 cm in diameter. They can be purchased readily from laboratory supply houses.

A laboratory scoop or garden variety trowel can also be used to sample bulk material. The trowel looks like a small shovel. The blade is usually about 7 by 13 cm with a sharp tip. A laboratory scoop is similar to the trowel, but the blade is usually more curved and has a closed upper end to permit the containment of material. Scoops come in different sizes and shapes. Stainless steel or polypropylene scoops with 7 by 15 cm blades are preferred. A trowel can be bought from hardware stores; the scoop can be bought from laboratory supply houses.

Uses

The use of the trier is similar to that of the grain sampler discussed in Method II-8. It is preferred over the grain sampler when the powdered or granular material to be sampled is moist or sticky.

The trowel or lab scoop can be used in some cases for sampling dry, granular or powdered material in bins or other shallow containers. The lab scoop is a superior choice since it is usually made of materials less subject to corrosion or chemical reactions.

Procedures for Use

1. Insert the trier into the waste material at a 0 to 45° angle from horizontal. This orientation minimizes the spillage of sample from the sampler. Extraction of samples might require tilting of the containers.

2. Rotate the trier once or twice to cut a core of material.

3. Slowly withdraw the trier, making sure that the slot is facing upward.

4. Transfer the sample into a suitable container with the aid of a spatula and/or brush.

5. If composite sampling is desired, repeat the sampling at different points two or more times and combine the samples in the same sample container.

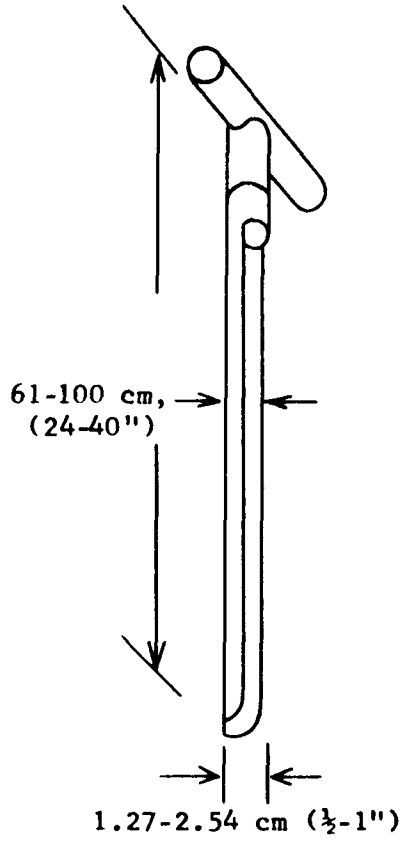

Source: Reference 6.

Figure 6. Sampling trier.

6. Check that a Teflon liner is present in the cap if required. Secure the cap tightly. The chemical preservation of solids is generally not recommended. Refrigeration is usually the best approach supplemented by a minimal holding time.

7. Label the sample bottle with the appropriate sample tag. Be sure to label the tag carefully and clearly, addressing all the categories or parameters. Complete all chain-of-custody documents and record in the field logbook.

8. Place the properly labeled sample bottle in an appropriate carrying container maintained at 4°C throughout the sampling and transportation period.

Sources

deVera, E.R., Simmons, B.P., Stephens, R.D., and Storm, D.L. "Samplers and Sampling Procedures for Hazardous Waste Streams." EPA-600/2-80-018. January 1980.

METHOD II-8: SAMPLING BULK MATERIALS WITH A GRAIN THIEF

Discussion

The grain thief (Figure 7) consists of two slotted telescoping tubes, usually made of brass or stainless steel. The outer tube has a conical, pointed tip on one end that permits the sampler to penetrate the material being sampled. The sampler is opened and closed by rotating the inner tube. Grain thiefs are generally 61 to 100 cm long by 1.27 to 2.54 cm in diameter, and they are commercially available at laboratory supply houses.

Uses

The grain thief is used for sampling powdered or granular wastes or materials in bags, fiberdrums, sacks or similar containers. This sampler is most useful when the solids are no greater than 0.6 cm in diameter.

Procedures for Use

1. While the sampler is in the closed position, insert it into the granular or powdered material or waste being sampled from a point near a top edge or corner, through the center, and to a point diagonally opposite the point of entry.

2. Rotate the inner tube of the sampler into the open position.

3. Wiggle the sampler a few times to allow materials to enter the open slots.

4. Place the sampler in the closed position and withdraw from the material being sampled.

5. Place the sampler in a horizontal position with the slots facing upward.

6. Rotate and slide away the outer tube from the inner tube.

7. Transfer the collected sample in the inner tube into a suitable sample container.

8. If composite sampling is desired, collect two or more core samples at different points, and combine the samples in the same container.

9. Check that a Teflon liner is present in the cap if required. Secure the cap tightly. The chemical preservation of solids is generally not recommended. Refrigeration is usually the best approach supplemented by a minimal holding time.

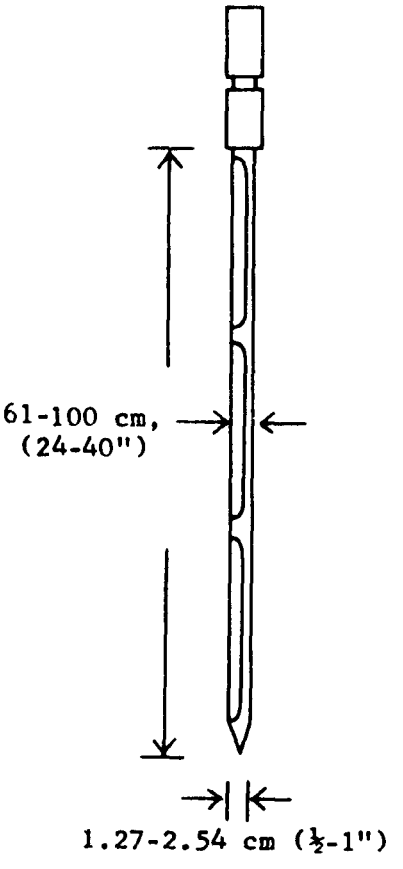

Source: Reference 6.

Figure 7. Grain thief.

10. Label the sample bottle with the appropriate sample tag. Be sure to label the tag carefully and clearly, addressing all the categories or parameters. Complete all chain-of-custody documents and record in the field logbook.

11. Place the properly labeled sample bottle in an appropriate carrying container maintained at 4°C throughout the sampling and transportation period.

Sources

deVera, E.R., Simmons, B.P., Stephens, R.D., and Storm, D.L. "Samplers and Sampling Procedures for Hazardous Waste Streams." EPA-600/2-80-018. January 1980.

Horwitz, W., Sensel, A., Reynolds, H., and Parks, D.L., editors. Animal Feed: Sampling Procedure. In: Official Methods of Analysis. The Association of Official Analytical Chemists. 12th Edition. Washington, D.C. 1979.

SECTION 3

LIQUIDS

GENERAL

Liquids by their nature are a relatively easy substance to collect. Obtaining representative samples, however, is more difficult. Density, solubility, temperature, currents, and a wealth of other mechanisms cause changes in the composition of a liquid with respect to both time and distance. Accurate sampling must be responsive to these dynamics and reflect their actions.

For the purpose of this manual liquids will include both aqueous and nonaqueous solutions and will be subdivided as surface waters, containerized liquids, and ground waters. Surface waters will be considered as any fluid body, flowing or otherwise, whose surface is open to the atmosphere. This will include rivers, streams, discharges, ponds, and impoundments, both aqueous and nonaqueous. The containerized liquid section will address sampling of both sealed and unsealed containers of sizes varying from drums to large tanks. Some overlap may occur between these two sections; when in doubt, both sections should be consulted. The groundwater section will be concerned with obtaining samples from subsurface waters but will not include methods for well construction.

SURFACE WATERS

Samples from shallow depths can be readily collected by merely submerging the sample container. The method is advantageous when the sample might be significantly altered during transfer from a collection vessel into another container. This is the case with samples collected for oil and grease analysis since considerable material may adhere to the sample transfer container and as a result produce inaccurately low analytical results. Similarly the transfer of a liquid into a small sample container for volatile organic analysis, if not done carefully, could result in significant aeration and resultant loss of volatile species. Though simple, representative, and generally free from substantial material disturbances, it has significant shortcomings when applied to a hazardous waste, since the external surface of each container would then need to be decontaminated.

In general the use of a sampling device, either disposable or constructed of a nonreactive material such as glass, stainless steel, or Teflon, is the most prudent method. The device should have a capacity of at least 500 ml, if possible, to minimize the number of times the liquid must be disturbed, thus reducing agitation of any sediment layers.

A 1-liter stainless steel beaker with pour spout and handle works well. It is easily cleaned and considerably less expensive than Teflon. Though still more expensive than other plastics it is more durable and generally more inert under field conditions. Also useful are large stainless steel ice scoops and ladles available from commercial kitchen and laboratory supply houses.

It is often necessary to collect liquid samples at some distance from shore or the edge of the containment. In this instance an adaptation which extends the reach of the technician is advantageous. Such a device is the pond sampler as devised by the California Department of Health.[6] It incorporates a telescoping heavy-duty aluminum pole with an adjustable beaker clamp attached to the end (see Method III-2). The beaker previously described, a disposable glass or plastic container, or the actual sample container itself, can be fitted into the clamp. In situations where cross contamination is of concern, use of a disposable container or the actual sample container is always advantageous. The cost of properly cleaning usually outweighs the cost of disposal of otherwise reusable glassware or bottles. This is especially true when the cleanup must be done in the field. The potential contamination of samples for volatile organic analysis by the mere presence of organic solvents necessary for proper field cleaning is usually too great to risk.

Another method of extending the reach of sampling efforts is the use of a small peristaltic pump (see Method III-3). In this method the sample is drawn in through heavy-wall Teflon tubing and pumped directly into the sample container. This system allows the operator to reach out into the liquid body, sample from depth, or sweep the width of narrow streams.

If a medical grade silicone tubing is used in the peristaltic pump, the system is suitable for sampling almost any parameter including most organics.[7,8] Some volatile stripping, however, may occur, and though the system may have a high flow rate, some material may be lost on the tubing. Therefore, pumping methods should be avoided for sampling volatile organics or oil and grease. Battery-operated pumps of this type are available and can be easily hand-carried or carried with a shoulder sling. It is necessary in most situations to change both the Teflon suction line as well as the silicon pump tubing between sample locations to avoid cross-contamination. This requires maintaining a sufficiently large stock of material to avoid having to clean the tubing in the field.

These tubings are quite expensive but their relatively inert nature makes thorough decontamination in the lab both practical and simple thus allowing reuse. It should be noted that the Teflon suction tubing is an effective substitute for that supplied with the sophisticated automatic liquid waste samplers such as the ISCO Model 2100 and Manning Models S-3000 and S-4040.

When medical grade silicon tubing is not available or the analytical requirements are particularly strict, the system can be altered as described in Method III-3, Figure 10. In this configuration the sample volume accumulates in the vacuum flask and does not enter the pump. The integrity of the collection system can now be maintained with only the most nonreactive

material contacting the sample. Some loss in lift ability will result since the pump is now moving air, a compressible gas rather than an essentially noncompressible liquid.

It may on occasion be necessary to sample large bodies of water where a near surface sample will not sufficiently characterize the body as a whole. In this instance again the above-mentioned pump is quite serviceable. It is capable of lifting water from depths in excess of 6 meters. It should be noted that this lift ability decreases somewhat with higher density fluids and with increased wear on the silicone pump tubing. Similarly increases in altitude will decrease the pumps ability to lift from depth. When sampling a liquid stream which exhibits a considerable flow rate, it may be necessary to weight the bottom of the suction line. The stainless steel strainer suction weight supplied with the ISCO and Manning samplers usually works well. A heavier weight can be constructed by filling a short (7.5 cm to 10 cm) length of Teflon tubing with lead and plugging both ends with tight-fitting Teflon plugs. This weight can then be clamped with stainless steel band clamps to the suction tubing.

Situations may still arise where a sample must be collected from depths beyond the capabilities of a peristaltic pump. In this instance an at-depth sampler may be required. At present no such instrument made from noncontaminating materials is commercially available. If such a system is necessary it can be fabricated or an existing system can be modified by replacing the rubber or plastic parts with Teflon or stainless steel. Care should be taken in choosing a design that is easy to clean and decontaminate. A Kemmerer-type sampler appears most applicable in its ability to be properly modified and easily cleaned.

METHOD III-1: SAMPLING SURFACE WATERS USING A DIPPER OR OTHER TRANSFER DEVICE

Discussion

A dipper or other container constructed of inert material, such as stainless steel or Teflon, can be used to transfer liquid wastes from their source to a sample bottle. This prevents unnecessary contamination of the outer surface of the sample bottle that would otherwise result from direct immersion in the liquid. Use of this device also prevents the technician from having to physically contact the waste stream. Depending upon the sampling application, the transfer vessel can be either disposed of or reused. If reused, the vessel should be thorougly rinsed and/or decontaminated prior to sampling a different source.

Uses

A transfer device can be utilized in most sampling situations except those where aeration must be eliminated, such as volatile organic analysis or where significant material may be lost due to adhesion to the transfer container.

Procedures for Use

1. Submerge a stainless steel dipper or other suitable device with minimal surface disturbance.

2. Allow the device to fill slowly and continuously.

3. Retrieve the dipper/device from the surface water with minimal disturbance.

4. Remove the cap from the sample bottle and slightly tilt the mouth of the bottle below the dipper/device edge.

5. Empty the dipper/device slowly, allowing the sample stream to flow gently down the side of the bottle with minimal entry turbulence.

6. Continue delivery of the sample until the bottle is almost completely filled. Leave adequate ullage to allow for expansion.

7. Preserve the sample if necessary as per guidelines in Appendix A.

8. Check that a Teflon liner is present in the cap if required. Secure the cap tightly.

9. Label the sample bottle with an appropriate sample tag. Be sure to label the tag carefully and clearly, addressing all the categories or parameters. Record the information in the field logbook and complete the chain-of-custody form.

10. Place the properly labeled sample bottle in an appropriate carrying container maintained at 4°C throughout the sampling and transportation period.

11. Dismantle the sampler; wipe the parts with terry towels or rags and store them in plastic bags for subsequent cleaning. Store used towels or rags in garbage bags for subsequent disposal.

Sources

GCA Corporation, "Quality Assurance Plan, Love Canal Study - Appendix A, Sampling Procedures," EPA Contract 68-02-3168.

METHOD III-2: USE OF POND SAMPLER FOR THE COLLECTION OF SURFACE WATER SAMPLES

Discussion

The pond sampler consists of an adjustable clamp attached to the end of a two- or three-piece telescoping aluminum tube that serves as the handle. The clamp is used to secure a sampling beaker (see Figure 8). The sampler is not commercially available, but it is easily and inexpensively fabricated. The tubes can be readily purchased from most hardware or swimming pool supply stores. The adjustable clamp and sampling beaker can be obtained from most laboratory supply houses. The materials required to fabricate the sampler are given in Appendix B.

Uses

The pond sampler is used to collect liquid waste samples from disposal ponds, pits, lagoons, and similar reservoirs. Grab samples can be obtained at distances as far as 3.5 m from the edge of the ponds. The tubular aluminum handle may bow when sampling very viscous liquids if sampling is not done slowly.

Procedures for Use

1. Assemble the pond sampler. Make sure that the sampling beaker and the bolts and nuts that secure the clamp to the pole are tightened properly.

2. With proper protective garment and gear, take grab samples by slowly submerging the beaker with minimal surface disturbance.

3. Retrieve the pond sampler from the surface water with minimal disturbance.

4. Remove the cap from the sample bottle and slightly tilt the mouth of the bottle below the dipper/device edge.

5. Empty the sampler slowly, allowing the sample stream to flow gently down the side of the bottle with minimal entry turbulence.

6. Continue delivery of the sample until the bottle is almost completely filled.

7. Preserve the sample if necessary as per guidelines in Appendix A.

8. Check that a Teflon liner is present in the cap if required. Secure the cap tightly.

9. Label the sample bottle with an appropriate sample tag. Be sure to label the tag carefully and clearly, addressing all the categories or parameters. Record the information in the field logbook and complete the chain-of-custody documents.

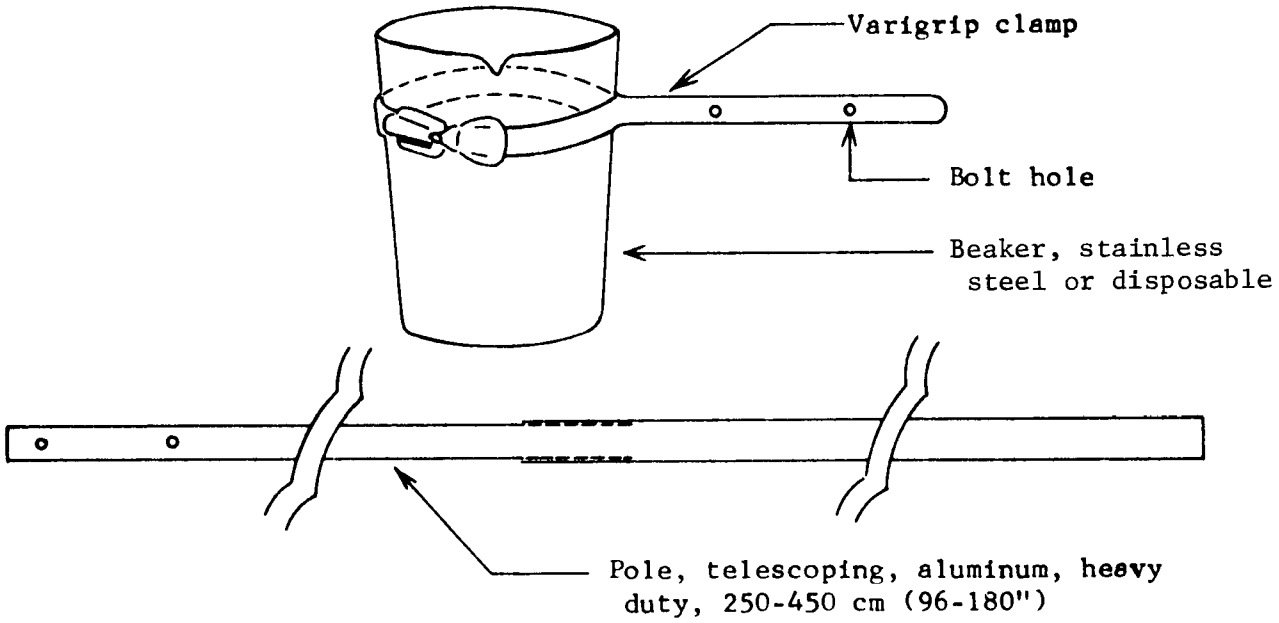

Source: Reference 6.

Figure 8. Pond sampler.

10. Place the properly labeled sample bottle in an appropriate carrying container maintained at 4°C throughout the sampling and transportation period.

11. Dismantle the sampler; wipe the parts with terry towels or rags and store them in plastic bags for subsequent cleaning. Store used towels or rags in garbage bags for subsequent disposal.

Sources

deVera, E.R., Simmons, B.P., Stephens, R.D., and Storm, D.L. "Samplers and Sampling Procedures for Hazardous Waste Streams," EPA-600/2-80-018, January 1980.

GCA Corporation, "Quality Assurance Plan, Love Canal Study - Appendix A, Sampling Procedures," EPA Contract 68-02-3168.

METHOD III-3: PERISTALTIC PUMP FOR SAMPLING SURFACE WATER BODIES

Discussion

This collection system consists of a peristaltic pump capable of achieving a pump rate of 1 to 3 lpm, and an assortment of Teflon tubing for extending the suction intake. A battery operated pump is preferable as it eliminates the need for DC generators or AC inverters.

Uses

The system, as shown in Figures 9 and 10, is highly versatile. It is portable and the sample collection is conducted through essentially chemically nonreactive material. It is practical for a wide range of applications including streams, ponds, and containers. This procedure can both extend the lateral reach of the sampler and allow sampling from depth. Likewise, it can function both as a well purge and a sample collection system. The chief disadvantage of this method is the limited lift capacity of the pump, approximately 8 meters.

Procedures for Use

1. Install clean, medical-grade silicone tubing in the pump head, as per the manufacturer's instructions. Allow sufficient tubing on discharge side to facilitate convenient dispensation of liquid into sample bottles and only enough on the suction end for attachment to the intake line. This practice will minimize sample contact with the silicone pump tubing.

2. Select the length of suction intake tubing necessary to reach the required sample depth and attach to intake side of pump tubing. Heavy-wall Teflon, of a diameter equal to the required pump tubing, suits most applications. (Heavier wall will allow for a slightly greater lateral reach.)

3. If possible, allow several liters of sample to pass through system, before actual sample collection. Collect this purge volume and then return to source after the sample aliquot has been withdrawn.

4. Fill necessary sample bottles by allowing pump discharge to flow gently down the side of bottle with minimal entry turbulence. Cap each bottle as filled.

5. Preserve the sample if necessary as per guidelines in Appendix A.

6. Check that a Teflon liner is present in the cap if required. Secure the cap tightly.

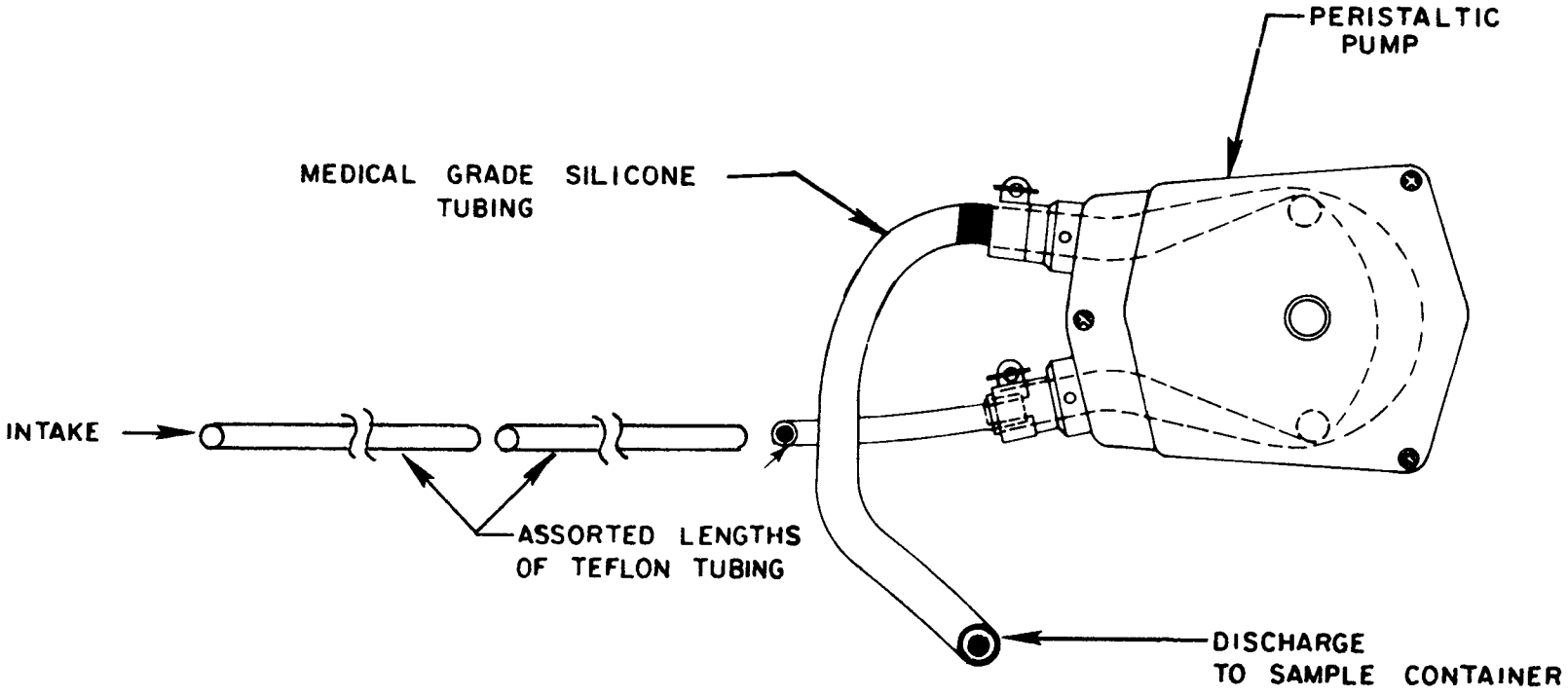

Source: Reference 7.

Figure 9. Peristaltic pump for liquid sampling.

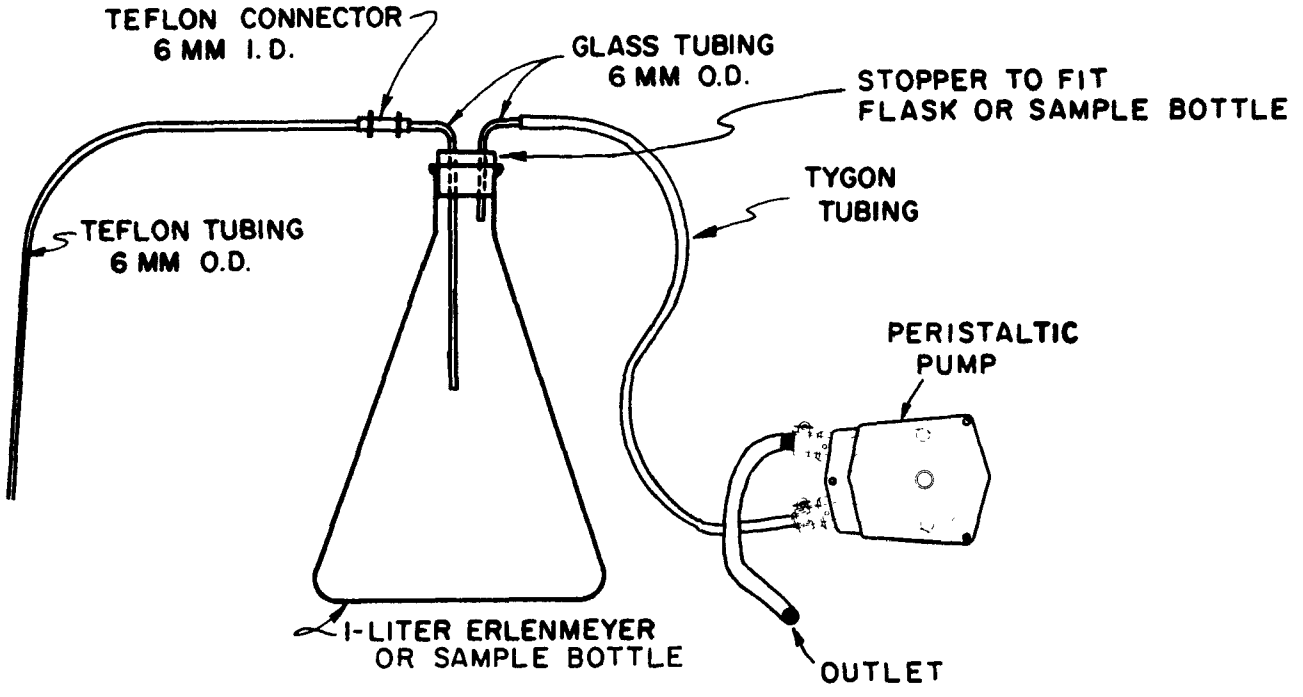

Source: Reference 9.

Figure 10. Peristaltic pump for liquid sampling (modified).

7. Label the sample bottle with an appropriate tag. Be sure to complete the tag with all necessary information. Record the information in the field logbook and complete the chain-of-custody documents.

8. Place the properly labeled sample bottle in an appropriate carrying container maintained at 4°C throughout the sampling and temperature period.

9. Allow system to drain, then disassemble. Return tubing to lab for decontamination (if feasible).

Sources

U.S. Environmental Protection Agency. "Procedures Manual for Ground Water Monitoring at Solid Waste Disposal Facilities. EPA-530/SW-611. August 1977.

METHOD III-4: COLLECTION OF WATER SAMPLES FROM DEPTH WITH A KEMMERER BOTTLE

Discussion

The Kemmerer bottle is a messenger-activated water sampling device (see Figure 11). In the open position water flows easily through the device. Once lowered to the desired depth a messenger is dropped down the sample line tripping the release mechanism and closing the bottle. In the closed position the bottle is sealed, both on top and bottom, from any additional contact with the water column and can be retrieved.

Most commercially available Kemmerer bottles are of brass or plastic construction. Modification of existing systems with nonreactive materials such as Teflon, glass or stainless steel would be only partially successful due to the complicated machining necessary for the release mechanism. Other modifications such as a stoppered bottom drain are simpler and useful in minimizing sample disturbance during transfer to the appropriate containers.

Uses

The Kemmerer bottle is currently the most practical method of collecting discrete, at-depth samples from surface waters or vessels where the collection depth exceeds the lift capacity of pumps. The application is limited however by the incompatability of various construction materials with some analytical techniques. Proper selection, i.e., all metal assemblies for organic analysis or all plastic assemblies for trace element analysis, will overcome this deficiency.

Procedures for Use

1. Inspect Kemmerer bottle for thorough cleaning and insure that sample drain valve is closed (if bottle is so equipped).

2. Measure and then mark sample line at desired sampling depth.

3. Open bottle by lifting top stopper-trip head assembly.

4. Gradually lower bottle until desired level is reached (predesignated mark from Step 2).

5. Place messenger on sample line and release.

6. Retrieve sampler; hold sampler by center stem to prevent accidental opening of bottom stopper.

7. Rinse or wipe off exterior of sampler body (wear proper gloves and protective clothing).

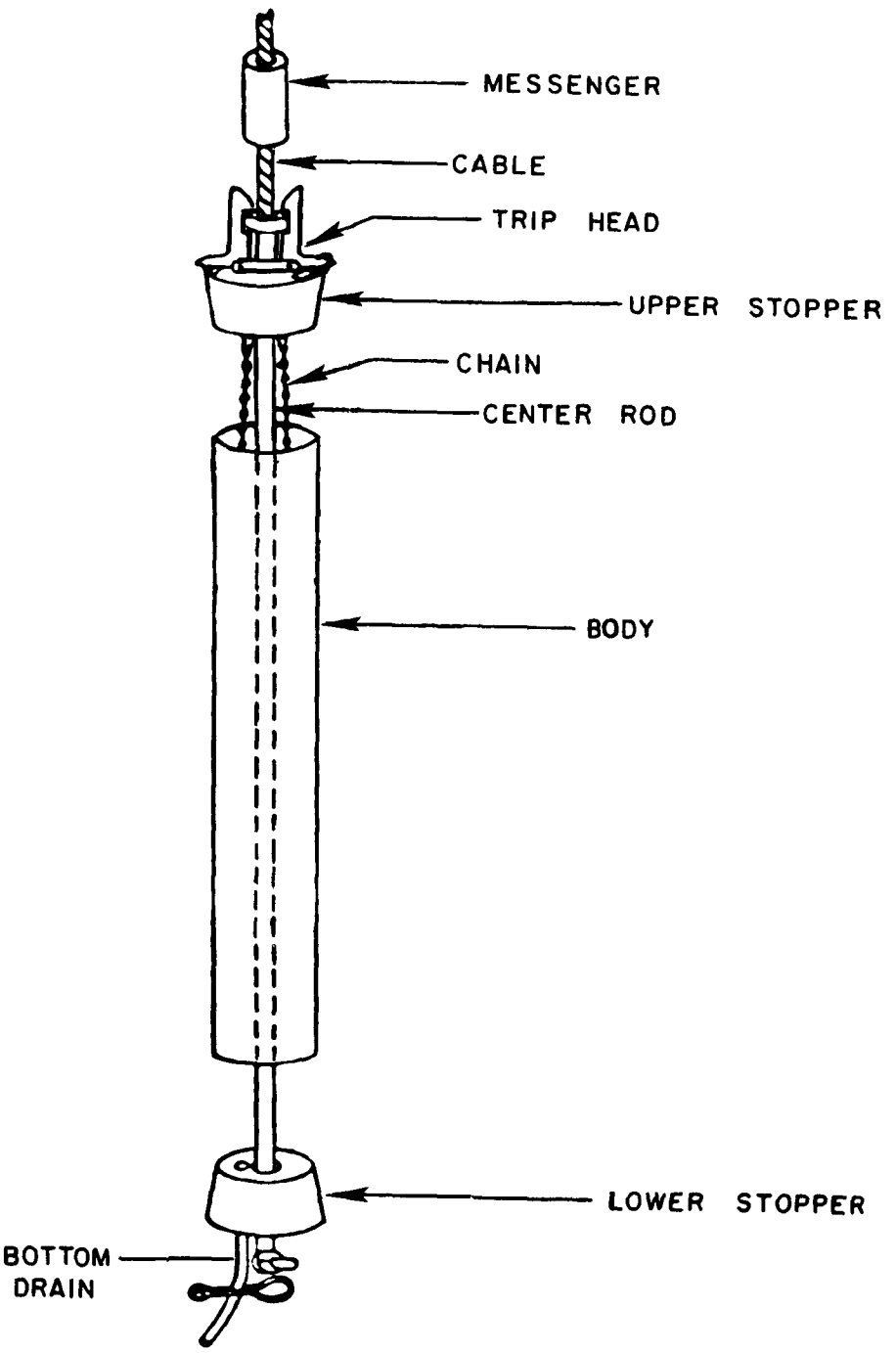

Figure 11. Modified Kemmerer sampler.

8. Recover sample by grasping lower stopper and sampler body with one hand (gloved), and transfer sample by either (a) lifting top stopper with other hand and carefully pouring contents into sample bottles, or (b) holding drain valve (if present) over sample bottle and opening valve.

9. Allow sample to flow slowly down side of sample bottle with minimal disturbance.

10. Preserve the sample if necessary as per guidelines in Appendix A.

11. Check that a Teflon liner is present in the cap if required. Secure the cap tightly.

12. Label the sample bottle with an appropriate tag. Be sure to complete the tag with all necessary information. Record the information in the field logbook and complete all chain-of-custody records.

13. Place the properly labeled sample bottle in an appropriate carrying container maintained at 4°C throughout the sampling and transportation period.

14. Decontaminate sampler and messenger or place in plastic bag for return to lab.

Sources

U.S. Environmental Protection Agency, "Procedures Manual for Ground Water Monitoring at Solid Waste Disposal Facilities." EPA-530/SW-611, August 1977.

CONTAINERIZED LIQUIDS

The sampling of tanks, containers, and drums present unique problems not associated with natural water bodies. Containers of this sort are generally closed except for small access ports, manways, or hatches on the larger vessels or taps and bungs on smaller drums. The physical size, shape, construction material, and location of access will limit the types of equipment and methods of collection.

When liquids are contained in sealed vessels, gas vapor pressures build up, sludges settle out, and density layerings develop. The potential for explosive reactions or the release of noxious gases when containers are opened requires considerable safeguards. The vessels should be opened with extreme caution. Preliminary sampling of any headspace gases may be warranted. Section IV details procedures for sampling headspace gases. As a minimum, a preliminary check with an explosimeter or an organic vapor analyzer will determine levels of personnel protection and may be of aid in selecting a sampling method.

In most cases it is impossible to observe the contents of these sealed or partially sealed vessels. Since some layering or stratification is likely in any solution left undisturbed over time, a sample must be taken that represents the entire depth of the vessel.

Agitation to disrupt the layers and rehomogenize the sample is physically difficult and almost always undesirable. In vessels greater than 1 meter in depth the method of choice is to slowly, in known increments of length, lower the suction line from a peristaltic pump. Discrete samples can be collected from various depths then combined or analyzed separately. If the depth of the vessel is greater than the lift capacity of the pump, an at-depth water sampler, such as the Kemmerer type discussed in Method III-4, may be required. In situations where the reactive nature of the contents are known, a small submersible pump may be used.

When sampling a previously sealed vessel, a check should be made for the presence of a bottom sludge. This is easily accomplished by measuring the depth to apparent bottom then comparing it to the known interior depth. Methods for sampling a bottom sludge are found in Section II.

The sampling of drums for hazardous liquid wastes is a very taxing situation with present equipment. The most widely used method is a glass tube, 6 mm to 16 mm I.D, that is lowered into the drum. The top of the tube is sealed with a stopper or the thumb and the tube withdrawn. The bottom of the tube is then placed over a glass jar, the stopper removed from the top and the contents drained into the containers. After collection of sufficient sample the tube is then broken up into the drum. This method is simple, relatively inexpensive, and quick and collects a sample without having to decontaminate equipment. It does, however, have serious drawbacks. Most low density fluids do not hold well in the glass tubes. A great deal of the potential sample flows out of the bottom of the tube as it is raised from the drum, thereby reducing the representativeness of collected material. Many

variations to this technique have been reported. These include the incorporation of a small suction device (i.e., pipette bulb) to the top of the tube as well as the use of various tube sizes. Some success has been reported with tubes that have been heated at one end then drawn to form a much smaller orifice. This allows the use of larger diameter tubing, therefore a greater volume of sample per attempt, while reducing the material loss from the tube bottom normally associated with larger diameter tubes.

It should be noted that in some instances disposal of the tube by breaking it into the drum may interfere with eventual plans for the removal of its contents. The use of this technique should therefore be cleared with the project officer or other disposal techniques evaluated.

In many instances a drum containing waste material will have a sludge layer on the bottom (Method III-5). Slow insertion of the sample tube down into this layer and then a gradual withdrawal will allow the sludge to act as a bottom plug to maintain the fluid in the tube. The plug can be gently removed and placed into the sample container by the use of a stainless steel lab spoon. These spoons are relatively inexpensive and can be disposed of in the original waste container with the glass transfer tube.

Designs exist for equipment that will collect a sample from the full depth of a drum and maintain it in the transfer tube until delivery to the sample bottle. These designs include primarily the Composite Liquid Waste Sampler (COLIWASA) and modifications thereof.[6] The COLIWASA is difficult to properly decontaminate in the field; its applicability is therefore limited to those cases when a sample of the full depth of the drum is absolutely necessary. The COLIWASA can be somewhat modified for this task by making the lift rod of stainless steel, the bottom stopper of Teflon, and the body of glass tubing. In this configuration the glass tube can be broken into the drum leaving only the center rod and the stopper to be decontaminated. In a preliminary investigation where the total number of drums to be sampled is small an equal number of both the center rods and bottom stoppers could be made in advance thus eliminating the time involved for onsite cleanup. Heat shrinkable Teflon tubing or other types of Teflon coating can also be used to cover the stainless steel rod if contact of the stainless steel with the waste is undesirable.

METHOD III-5: COLLECTION OF LIQUID CONTAINERIZED WASTES USING GLASS TUBES

Description

Liquid samples from opened containers (55-gallon drums) are collected using lengths of glass tubing. The glass tubes are normally 122 cm in length and 6 to 16 mm inside diameter. Larger diameter tubes may be used for more viscous fluids if sampling with the small diameter tube is not adequate. The tubing is broken up and discarded in the container after the sample has been collected, eliminating difficult cleanup and disposal problems. This method should not be attempted with less than a two-man sampling team.

Uses

This method provides for a quick, relatively inexpensive means of collecting concentrated containerized wastes. The major disadvantage is from potential sample loss which is especially prevalent when sampling less viscous fluids. Splashing can also be a problem and proper protective clothing (e.g., butyl rubber apron, face shields, boot covers) should always be worn.

Procedures for Use

1. Remove cover from sample container opening.

2. Insert glass tubing almost to the bottom of the container. Try to keep at least 30 cm of tubing above the top of the container.

3. Allow the waste in the drum to reach its natural level in the tube.

4. Cap the top of the tube with a safety-gloved thumb or a rubber stopper.

5. Carefully remove the capped tube from the drum and insert the uncapped end in the sample container.

6. Release the thumb or stopper on the tube and allow the sample container to fill to approximately 90 percent of its capacity.

7. Repeat steps 2 through 6 if more volume is needed to fill the sample container.

8. Remove the tube from the sample container and replace the tube in the drum.

9. Cap the sample container tightly with a Teflon-lined cap and affix the sample identification tag.

10. Break the glass sampling tube in such a way that all parts of it are discarded inside the drum. (Note: see the initial discussion to this section for exceptions.)

11. Replace the bung or place plastic over the drum.

12. Place sample container in a Ziplock plastic bag (one per bag).

13. Place each bagged container in a 1-gallon metal paint can (or appropriate sized container) and pack in vermiculite packing material. Place lid on the can.

14. Mark the sample identification number on the outside of each paint can and complete chain-of-custody log and the field logbook.

Optional Method (if sample of bottom sludge is desired)

1. Remove cover from container opening.

2. Insert glass tubing slowly almost to the bottom of the container. Try to keep at least 30 cm of tubing above the top of the container.

3. Allow the waste in the drum to reach its natural level in the tube.

4. Gently push the tube towards the bottom of the drum into the sludge layer. Do not force it.

5. Cap the top of the tube with a safely-gloved thumb or rubber stopper.

6. Carefully remove the capped tube from the drum and insert the uncapped end in the sample container.

7. Release the thumb or stopper on the tube and allow the sample container to fill to approximately 90 percent of its capacity. If necessary, the sludge plug in the bottom of the tube can be dislodged with the aid of a stainless steel laboratory spatula.

8. Repeat if more volume is needed to fill sample container and recap the tube.

9. Proceed as in Steps 9 through 14 above.

Note:

1. If a reaction is observed when the glass tube is inserted (violent agitation, smoke, light, etc.) the investigators should leave the area immediately.

2. If the glass tube becomes cloudy or smokey after insertion into the drum, the presence of hydrofluoric acid is indicated and a comparable length of rigid plastic tubing should be used to collect the sample.

3. When a solid is encountered in a drum (either layer or bottom sludge) the optional method described above may be used to collect a core of the material, or the material may be collected with a disposable scoop attached to a length of wooden or plastic rod.

Sources

American Society for Testing and Materials. "Standard Recommended Practices for Sampling Industrial Chemicals," ASTM E-300-73.

U.S. Environmental Protection Agency, "Technical Methods for Investigating Sites Containing Hazardous Substances, Technical Monograph 1-29, Draft," Ecology and the Environment, June 1981.

METHOD III-6: SAMPLING CONTAINERIZED WASTES USING THE COMPOSITE LIQUID WASTE SAMPLER (COLIWASA)

Discussion

The COLIWASA is a much cited sampler designed to permit representative sampling of multiphase wastes from drums and other containerized wastes. The sampler is commercially available or can be easily fabricated from a variety of materials including PVC, glass, or Teflon. In its usual configuration it consists of a 152 cm by 4 cm (inside diameter) section of tubing with a neoprene stopper at one end attached by a rod running the length of the tube to a locking mechanism at the other end. Manipulation of the locking mechanism opens and closes the sampler by raising and lowering the neoprene stopper. A current recommended model of the COLIWASA is shown in Figure 12; however, the design can be modified and/or adapted somewhat to meet the needs of the sampler.

Uses

The COLIWASA is primarily used to sample most containerized liquids. The plastic COLIWASA is reported to be able to sample most containerized liquid wastes except for those containing ketones, nitrobenzene, dimethylforamide, mesityloxide and tetrahydrofuran. A glass COLIWASA is able to handle all wastes unable to be sampled with the plastic unit except strong alkali and hydrofluoric acid solution. Due to the unknown nature of most containerized waste, it would therefore be advisable to eliminate the use of PVC materials and use samplers composed of glass or Teflon.

The major drawbacks associated with using a COLIWASA concern decontamination and costs. The sampler is difficult if not impossible to decontaminate in the field and its high cost in relation to alternative procedures (glass tubes) make it an impractical throwaway item. It still has applications, however, especially in instances where a true representation of a multiphase waste is absolutely necessary. For this reason, the procedure for its use is included.

Procedures for Use

1. Choose the material (see Appendix B) to be used to fabricate the COLIWASA and assemble the sampler as shown in Figure 12.

2. Make sure that the sampler is clean.

3. Check to make sure the sampler is functioning properly. Adjust the locking mechanism if necessary to make sure the neoprene rubber stopper provides a tight closure.

4. Wear necessary protective clothing and gear and observe required sampling precautions.

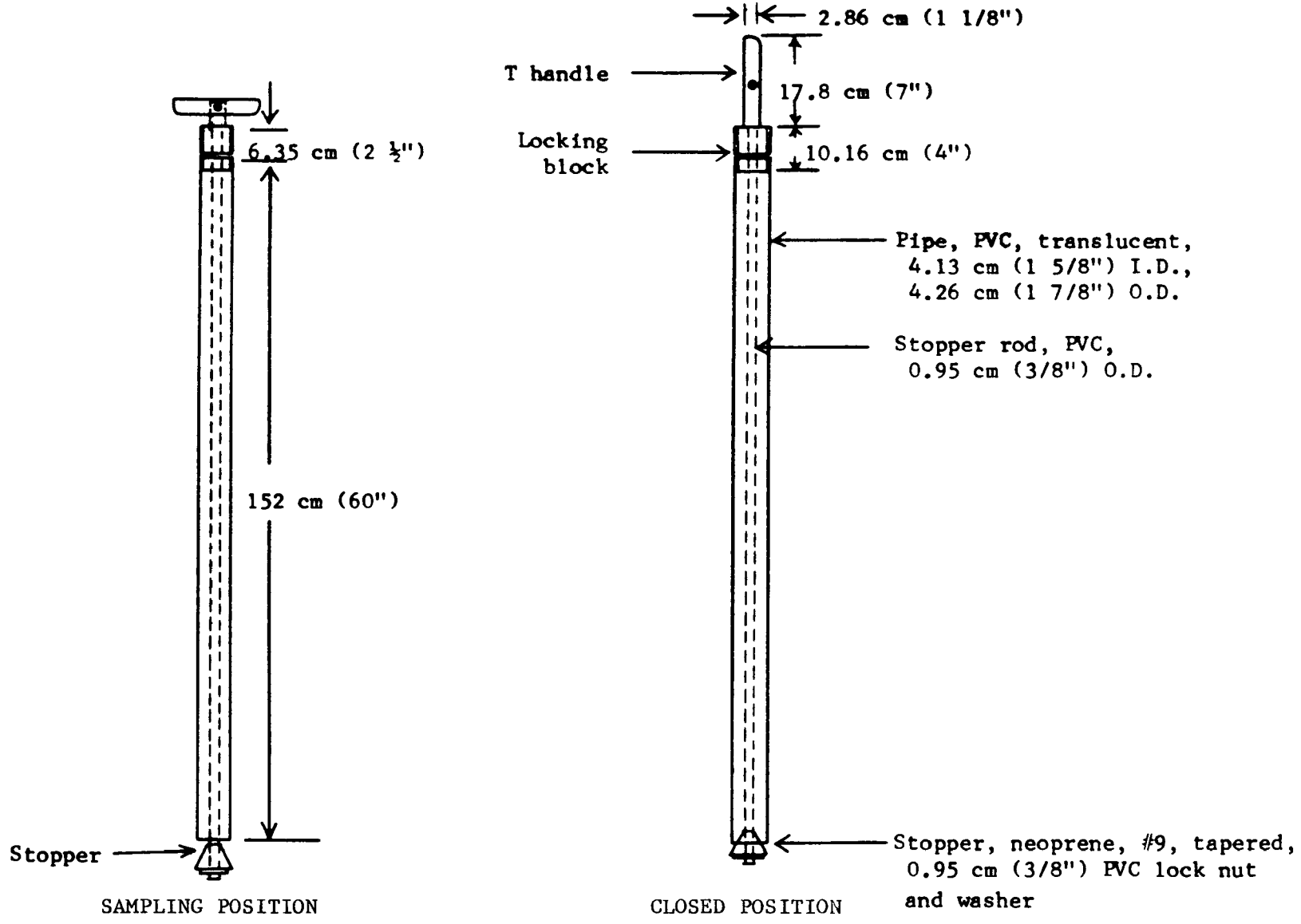

Source: Reference 6.

Figure 12. Composite liquid waste sampler (Coliwasa).

5. Put the sampler in the open position by placing the stopper rod handle in the T-position and pushing the rod down until the handle sits against the sampler's locking block.

6. Slowly lower the sampler into the liquid waste. (Lower the sampler at a rate that permits the levels of the liquid inside and outside the sampler tube to be about the same. If the level of the liquid in the sample tube is lower than that outside the sampler, the sampling rate is too fast and will result in a nonrepresentative sample).

7. When the sampler stopper hits the bottom of the waste container, push the sampler tube downward against the stopper to close the sampler. Lock the sampler in the closed position by turning the T handle until it is upright and one end rests tightly on the locking block.

8. Slowly withdraw the sampler from the waste container with one hand while wiping the sampler tube with a disposable cloth or rag with the other hand.

9. Carefully discharge the sample into a suitable sample container by slowly pulling the lower end of the T handle away from the locking block while the lower end of the sampler is positioned in a sample container.

10. Cap the sample container with a Teflon-lined cap; attach label and seal; record in field logbook; and complete sample analysis request sheet and chain-of-custody record.

11. Unscrew the T handle of the sampler and disengage the locking block. Clean sampler onsite or store the contaminated parts of the sampler in a plastic storage tube for subsequent cleaning. Store used rags in plastic bags for subsequent disposal.

Sources

deVera, E.R., Simmons, B.P., Stephens, R.D., and Storm, D.L. "Samplers and Sampling Procedures for Hazardous Waste Streams." EPA 600/2-80-018, January 1980.

GROUNDWATER

Groundwater sampling suffers from many of the same difficulties as closed containers, such as the inability to observe what is being collected or what disturbances are resulting from that collection.

There are essentially two sources from which to collect groundwater, either from wells or from seeps and springs. The former is more complex and a discussion of its intricacies will follow later. The sampling of seeps and springs is considerably easier, but it is less indicative of the actual groundwater quality than well sampling.

Seeps and springs are generally areas where the surface contour intersects the water table. These areas usually have well established microbiological populations evidenced by extensive moss and algal growths. These microbiological populations usually extend for some distance into the water-bearing formation (aquifer) and are generally more populous and of different species than those associated with the bulk of the aquifer. Their effect on the oxygen content, pH, nutrient and metals concentrations in the groundwater can be extensive. The water, therefore, that seeps from these areas may be substantially altered, and not representative of the conditions deeper in the subsurface. They can, however, yield some information if properly interpreted. If the area in question is without developed wells they are certainly worth consideration, especially for the ease with which they can be sampled.

A stainless steel scoop of the type found in ice machines is ideal for collecting samples from seeps. The flat bottom can be pressed against the bank and the water will flow with very little additional disturbance into the scoop, for transfer to the sample bottles. It is important to collect the sample as close to the actual seep as possible to reduce contact time with the atmosphere and potential for surface contamination.

For the purposes of this document, groundwater monitoring via wells will include only the actual sampling of existing wells. The methods and techniques for placement, construction, and development of wells for groundwater monitoring are varied and complicated. The "Manual for Ground-Water Sampling Procedures"[5] and "NEIC Manual for Groundwater/ Subsurface Investigations at Hazardous Waste Sites"[4] provide considerable information for establishing a full groundwater monitoring program including the completion of monitor wells. It is, however, necessary to know the well depth, diameter, construction material, type and size of the well screen if used, vertical position of the well screen or slotted section of casing, and type of annular packing if any. This information will aid in evaluating the suitability of the well for sampling for a particular analysis. For instance, if the well has a galvanized steel casing with a brass well screen, it would not be suitable for trace element analysis. Similarly, if the well is located in a swampy area, the type and amount of grout or fill around the well casing would determine the degree of surface water inflow to the well that might be expected. Most of the information necessary is available on the well drillers log. An example of a completed drillers log is included as Figure 13. It should be noted, however, that the actual well depth may be somewhat less than

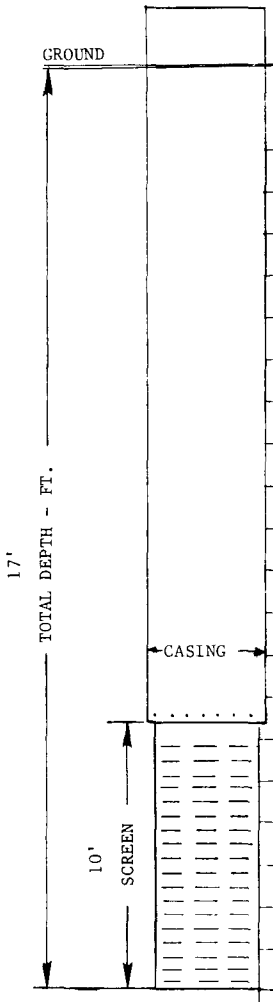

WELL LOG	FEET FROM GROUND SURFACE	NAME OF OWNER	
AIR	0- 3	JOB =	1393
TRASH	3-10	LOCATION	
SAND & STONES	10-20	WELL NO.	SAMPLING WELL 4
		HRS. PUMPED	N/A
		CAPACITY G.P.M.	N/A
		STATIC LEVEL	11'
		PUMPING LEVEL	N/A
		SPECIFIC CAPACITY	N/A
		DIAMETER OF WELL	8-3/4
		DEPTH OF WELL (ground)	17'
		LENGTH OF CASING	10'
		DISTANCE TO TOP OF PACKER (g)	
		TYPE SCREEN	PVC
		SIZE OF SCREEN	4"
		LENGTH OF SCREEN	10'
		TOP SCREEN FITTING	COUPLING
		BOTTOM SCREEN FITTING	CAP
		BLANK	NONE
		SLOT SIZE	.020
		DRILLING MACHINE NO.	D-5
		DRILLER	
		GRAVEL	#2
		BAGS OF CEMENT	CLAY
		DATE WELL COMPLETED	7/9/77

Rotary table approx. 3' above ground level

Figure 13. Sample drillers log.

the completion depth listed on the log as a result of aquifer invasion through the screen or open-hole sloughing below the casing. This may be particularly noticable in wells that have had only sporadic use or have been idle long. It is recommended then that actual well depth be checked by field measurement whenever possible.

Measurement of the well depth can be accomplished by sounding the well with a reusable weight attached to a disposable line. Slowly lower the weight into the well until the bottom is detected. With the line taut, mark the top of casing level on the line with waterproof ink. Recover the line and weight from the well and accurately measure the length of line below the mark. Discard the line and thoroughly clean the weight before reuse. Next, measure the casing length above (or below) ground level and subtract (or add) to obtain well depth.[5] When measuring potentially contaminated wells, wear appropriate safety gear to avoid skin contact with well water.

The depth to the water level in the well must be measured in order to calculate the liquid bore volume for prepurging and is also important to any hydrological interpretations of the analytical results. Depths to water are normally measured with respect to the top of casing, as in well-depth determinations. Several methods are available including: (1) the electric sounder, (2) the chalked steel tape, and (3) the popper.[5]

The electric sounder, although not the most accurate, is recommended for initial site work because of the minimal potential for equipment contamination and simplicity of use. Sounders usually consist of a conductivity cell at the end of a graduated wire, and a battery powered buzzer. When the cell contacts the water the increased conductivity completes the circuit and allows current to flow to the alarm buzzer. The depth to water can then be read from the graduations on the wire or the wire can be measured directly.

The chalked steel tape is a more accurate device for measuring static water levels. Coat the lower 1 to 1.5 meters of a steel measuring tape on either side with either carpenter's chalk or any of the various indicating pastes. Attach a weight to the lower end to keep the tape taut and lower it into the center of the well (condensate on the casing wall may prematurely wet the tape). Listen for a hollow "plopping" sound when the weight reaches water. Then lower the tape very slowly for at least another 15 cm, preferably to an even increment. Next, carefully withdraw the tape from the well; determine water depth by subtracting the wetted length of tape from the total length of tape in the well. In small-diameter wells, the volume of the weight may cause the water to rise by displacement. Thoroughly clean the wetted section of the tape and the weight before reuse to avoid cross contamination.

The metal tape and popper is another simple and reliable method for measuring depth to water in wells more than 3.8 cm (1.5 in.) in diameter. The popper is a metal cylinder with a concave undersurface fastened to the end of the metal tape. Raise and drop the popper until it hits the water surface and makes a distinct "popping" sound. Adjust the tape length so that the popper just hits the water surface. Read the depth to water from the tape measure.

To obtain a representative sample of the groundwater it must be understood that the composition of the water within the well casing and in close proximity to the well is probably not representative of the overall groundwater quality at that sampling site. This is due to the possible presence of drilling contaminants near the well and because important environmental conditions such as the oxidation-reduction potential may differ drastically near the well from the conditions in the surrounding water-bearing materials. For these reasons it is highly desirable that a well be pumped or bailed until the well is thoroughly flushed of standing water and contains fresh water from the aquifer. The recommended amount of purging before sampling is dependent on many factors including the characteristics of the well, the hydrogeological nature of the aquifer, the type of sampling equipment being used, and the parameters being sampled. A common procedure is to pump or bail the well until a minimum of two (2) to ten (10) bore-volumes have been removed.

Gibb[10] notes that removing all water from the well bore is only possible if the well is pumped dry and suggests two alternative approaches: (a) monitor the water level in the well while pumping. When the water level has "stabilized" most if not all of the water being pumped is coming from the aquifer. (b) monitor the temperature, conductivity, or pH of the water while pumping. When these parameters "stabilize" it is probable that little or no water from casing storage is being pumped.[9]

The use of an indicating analysis such as pH, temperature, redox potential, or, most commonly, conductivity, may be the most accurate and reliable method of assuring complete well purging. The technique is easily implemented in the field and gives a rapid and positive indication of changes in the well bore water. This change in the water character and subsequent stabilization can normally be interpreted as evidence that sufficient purging has occurred. It should be noted that the sensitivity of these parameters to changes as a result of exposure of groundwater to surface level conditions (i.e., changes in the partial pressure of dissolved gases or the conditions of the purging system) make in-situ monitoring desirable. An alternative to this would be to conduct these measurements in a closed cell attached to the discharge side of the pump system.

Other factors which will influence the amount of purging required before sampling include the pumping rate and the placement of the pumping equipment within the column of water in the well bore. For example, recent studies have shown that if a pump is lowered immediately to the bottom of a well before pumping, it may take some time for the column of water above it to be exchanged if the transmissivity of the aquifer is high and the well screen is at the bottom of the casing.[9,10] In such cases the pump will be drawing water primarily from the aquifer.

This has been further documented in studies conducted by the National Council of the Paper Industry for Air and Stream Improvement (NCASI)[8] on a full-scale model of a 2-inch PVC well. They found that purging from just below the water surface insured a more complete removal of the casing water than by withdrawal from well below the surface. It was also evident that when

purging did occur from just below the surface, satisfactory results could be obtained at any of a wide range of pumping rates with either a peristaltic or a submersible pump.

Because of the potential for further environmental contamination, planning for purge water disposal is a necessary part of well monitoring. Alternatives range from dumping it on the ground (not back down the well) to full containment, treatment, and disposal. If the well is believed to be contaminated, the best practice is to contain the purge water and store it until the water samples have been analyzed. Once the contaminants are identified, appropriate treatment requirements can be determined.

There are many methods available for well purging. In some cases bailing will suffice, however it can become tedious and labor intensive in deep or large diameter wells. Submersible pumps are often the best choice but most that are readily available to investigators are heavy, awkward and will not fit smaller diameter wells. Models have been on the market for the past few years that will fit inside a 2-inch diameter well; however, they can be costly and, as of the writing, not always easy to come by. Gas pressure lift systems are useful in many instances. They are generally light, easy to install, and can be powered by several different pressure systems, usually compressed nitrogen or air. The effect of the contact between the pressure gas and the groundwater usually results in changes in the dissolved gas content.[5] As a result pH, conductivity, or other analysis used to determine purge completion must be conducted down hole. Recent developments in the use of pumps powered by compressed gas have shown promise. Although these too have large gas volume demands when operated at substantial depths, some versions, such as the one built and tested by the NCASI,[8] can also be used for sample collection. Peristaltic pumps are widely used for purging of wells with water levels close to the surface (less than 8 meters). They are reasonably portable, light, and easily adaptable to ground level monitoring of purge indicator parameters by attaching a flow-through cell. These pumps require a minimum of down hole equipment and can easily be cleaned in the field; or the entire tubing assembly can be changed for each well.

Once the well has been sufficiently purged the actual sampling should begin as soon as the water level begins to approach its pre-purge level. Sampling for volatile organics may begin even sooner, before substantial volatilization begins. If recovery is very slow, it may be necessary to wait several hours or even until the following day before sufficient volume is available for all the necessary analyses. In this instance a volatile organics sample set may be collected soon after completion of the purging process and a second set with the remaining samples. When a pump is used for sample collection, its rate should be controlled to closely match the transmissivity of the formation. Excessive draw down of the well during sampling may result in nonrepresentative samples due to changes in groundwater flow.[11]

Bailers are probably the simplest means of collecting groundwater samples. They result in a minimum of sample disturbance, if carefully handled. They can be constructed of noncontaminating materials, and their low relative cost makes the use of a separate device for each well practical, thus

eliminating infield cleaning and cross contamination. Peristaltic pumps can be used for sampling in most shallow wells. They require a minimum of down-hole equipment and cross contamination can be eliminated by replacement of the suction tubing between wells. Gibb[12] as well as NCASI[8] found little difference between samples withdrawn by a peristaltic pump and those taken by a bailer. These pumps however are not suitable for the collection of volatile organics due to possible gas stripping; therefore, their use should be supplemented by a bailer when sampling includes volatile organic species.

The use of submersible pumps for sample collection is possible provided they are constructed of suitably noncontaminating materials. They can operate at depths beyond the capabilities of peristaltic pumps and at which bailing becomes tedious. The chief drawback, however, is the difficulty of avoiding cross contamination between wells. These systems are generally too expensive to allow for several separate units and field decontamination is very difficult and should properly require solvents which may lead to sample contamination. Their use, therefore, in multiple well programs, should be carefully considered against bailers.

In general, gas pressure lift systems should not be used for sample collection as they have been shown to cause considerable changes in the groundwater character.[12]

METHOD III-7: PURGING WITH A PERISTALTIC PUMP

Discussion

The peristaltic pump as described in the surface water sampling section Method III-3 can be implemented for the presample purging of groundwater monitor wells.

Uses

The use of a peristaltic pump for well purging is particularly advantageous since the same system can later be utilized for sample collection (see Method III-10). The application, however, is limited to wells with a depth of less than approximately 8 meters, due to the limited lift capabilities of peristaltic action.

Procedures for Use

1. Using clean equipment, sound well for total depth and water level, then calculate the fluid volume in the casing ("casing volume").

2. Determine depth from casing top to mid-point of screen or well section open to aquifer. (Consult drillers log or sound for bottom.)

3. If depth to mid-point of screen is in excess of 8 meters, choose alternate system.

4. Lower intake into the well to a short distance below the water level and begin water removal. Collect or dispose of purged water in an acceptable manner. Lower suction intake, as required, to maintain submergence.

5. Measure rate of discharge frequently. A bucket and stopwatch are most commonly used.

6. Purge a minimum of two casing volumes or until discharge, pH, temperature, or conductivity stabilize. See discussion on well purging in Section III, Groundwater.

7. After pumping, monitor water level recovery. Recovery rate may be useful in determining sample rate.

METHOD III-8: PURGING WITH A GAS PRESSURE DISPLACEMENT SYSTEM

Discussion

A pressure displacement system consists of a chamber equipped with a gas inlet line, a water discharge line and two check valves (see Figure 14). When the chamber is lowered into the casing, water floods it from the bottom through the check valve. Once full, a gas (i.e., nitrogen or air) is forced into the top of the chamber sufficient to result in the upward displacement of the water out the discharge tube. The check valve in the bottom prevents water from being forced back into the casing and the upper check valve prevents water from flowing back into the chamber when the gas pressure is released. This cycle can be repeated as necessary until purging is complete.

Uses

The pressure lift system is particularly useful when the well depth is beyond the capability of a peristaltic pump. The water is displaced up the discharge tube by the increased gas pressure above the water level. The potential for increased gas diffusion into the water makes this system unsuitable for sampling for volatile organic or most pH critical parameters.[9]

Procedures for Use

1. Using clean noncontaminating equipment (i.e., an electronic level indicator) determine the water level in the well then calculate the fluid volume in the casing.

2. Determine depth to midpoint of screen or well section open to aquifer (consult drillers log).

3. Lower displacement chamber until top is just below water level.

4. Attach gas supply line to pressure adjustment valve on cap.

5. Gradually increase gas pressure to maintain discharge flow rate.

6. Measure rate of discharge frequently. A bucket and stopwatch are usually sufficient.

7. Purge a minimum of two casing volumes or until discharge characteristics stabilize (see discussion on well purging in Section III, Groundwater).

8. After pumping, monitor water level recovery. Recovery rate may be useful in determining sample rate.

Source

U.S. Environmental Protection Agency, "Procedures Manual for Ground Water Monitoring at Solid Waste Disposal Facilities," EPA-530/SW-611, August 1977.

ecology and environment, inc.
223 WEST JACKSON BLVD.
CHICAGO, IL 60606 (312) 663-9415

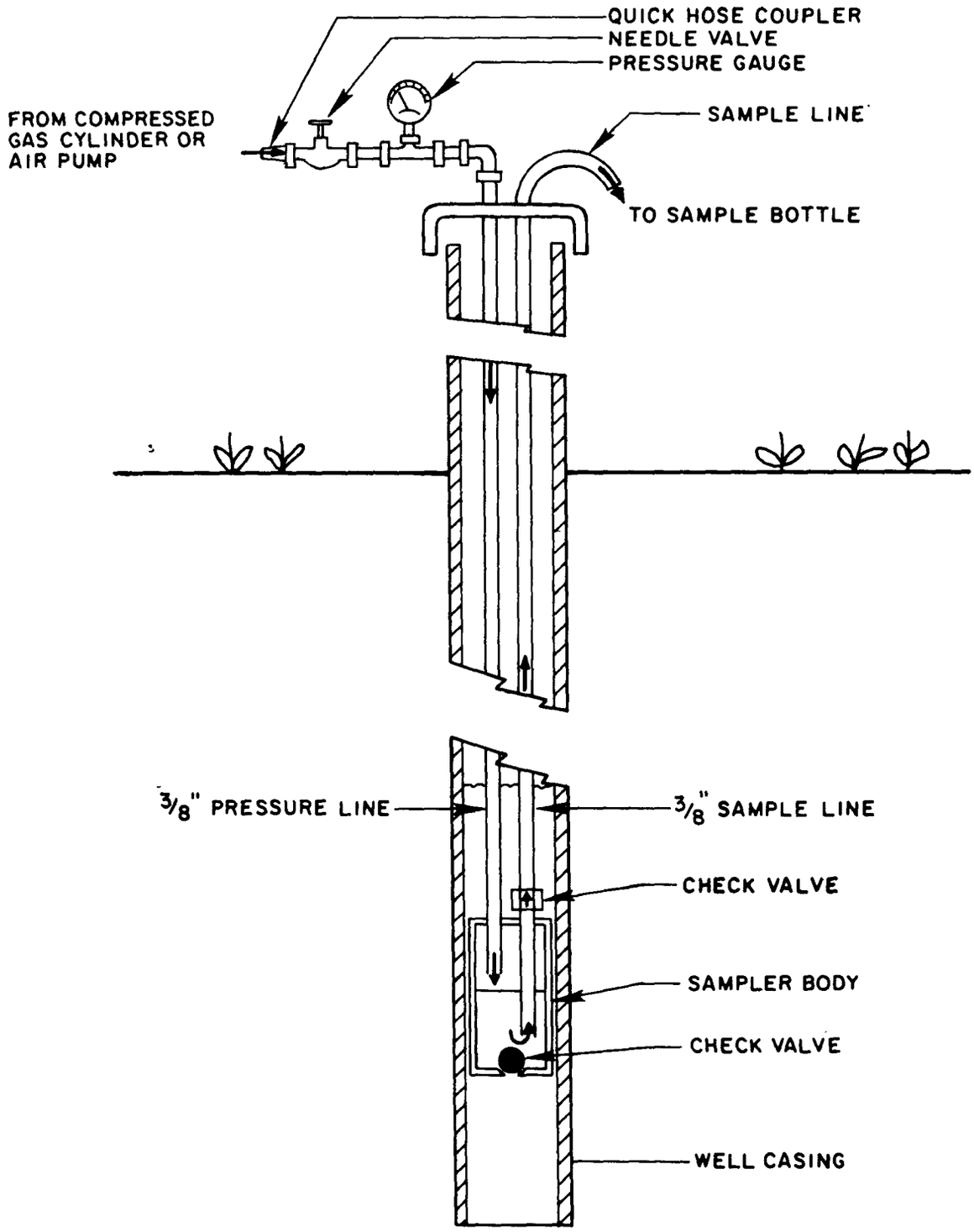

Source: Reference 10.

Figure 14. Gas pressure displacement system.

METHOD III-9: SAMPLING MONITOR WELLS WITH A BUCKET TYPE BAILER

Discussion

Bucket type bailers are tall narrow buckets equipped with a check valve on the bottom. This valve allows water to enter from the bottom as the bailer is lowered, then prevents its release as the bailer is raised (see Figure 15).

Uses

This device is particularly useful when samples must be recovered from depths greater than the range (or capability) of suction lift pumps, when volatile stripping is of concern, or when well casing diameters are too narrow to accept submersible pumps. It is the method of choice for the collection of samples which are susceptible to volatile component stripping or degradation due to the aeration associated with most other recovery systems. Samples can be recovered with a minimum of aeration if care is taken to gradually lower the bailer until it contacts the water surface and is then allowed to sink as it fills. The primary disadvantages of bailers are their limited sample volume and inability to collect discrete samples from a depth below the water surface.

Procedures for Use

1. Using clean, noncontaminating equipment, i.e., an electronic level indicator (avoid indicating paste), determine the water level in the well, then calculate the fluid volume in the casing.

2. Purge well as per Methods III-7 or III-8.

3. Attach bailer to cable or line for lowering.

4. Lower bailer slowly until it contacts water surface.

5. Allow bailer to sink and fill with a minimum of surface disturbance.

6. Slowly raise bailer to surface. Do not allow bailer line to contact ground.

7. Tip bailer to allow slow discharge from top to flow gently down the side of the sample bottle with minimum entry turbulence.

8. Repeat steps 2-5 as needed to acquire sufficient volume.

9. Preserve the sample, if necessary, according to the guidelines in Appendix A.

10. Check that a Teflon-liner is present in cap if required. Secure the cap tightly.

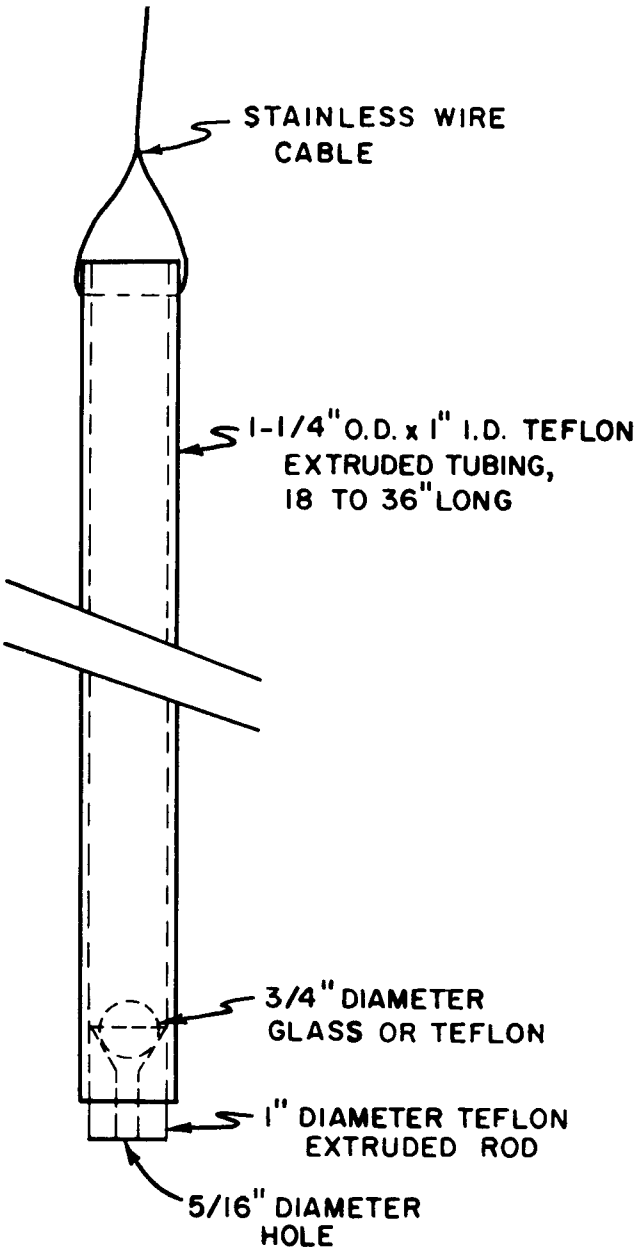

Source: Reference 9.

Figure 15. Teflon bailer.

11. Label the sample bottle with an appropriate tag. Be sure to complete the tag with all necessary information. Record the information in the field logbook and complete all chain-of-custody documents.

12. Place the properly labeled sample bottle in an appropriate carrying container maintained at 4°C throughout the sampling and transportation period.

13. Rinse bailer with deionized water before reuse. In some cases, especially where trace analysis is desired, it may be prudent to use a separate bailer for each well or, if possible, to thoroughly decontaminate the bailer after each use according to specific laboratory instructions. After use, place in plastic bag for return to lab.

Sources

Dunlap, W.J., McNabb, J.F., Scalf, M.R. and Crosby, R.L., "Sampling for Organic Chemicals and Microorganism in the Subsurface." EPA-600/2-77-176, August 1977.

METHOD III-10: SAMPLING MONITOR WELLS WITH A PERISTALTIC PUMP

Discussion

A pump system is considerably advantageous when analytical requirements demand sample volumes in excess of several liters. The major drawback of a pump system is the potential for increased volatile component stripping as a result of the required lift vacuum. Samples for volatile organic analysis should be collected with a bailer as described in Method III-9 and should precede any sample collection which may further disturb the well bore content.

Uses

The peristaltic pump system can be used for monitor well sampling whenever the lift requirements do not exceed 8 meters. It becomes particularly important to use a heavy wall tubing in this application in order to prevent tubing collapse under the high vacuums needed for lifting from depth.

Procedures for Use

1. Using clean, noncontaminating equipment, i.e., an electronic level indicator (avoid indicating paste), determine the water level in the well, then calculate the fluid volume in the casing.

2. Purge well as per Methods III-7 or III-8.

3. If soundings show sufficient level of recovery, prepare pump system. If insufficient recovery is noted allow additional time to collect samples on a periodic schedule which will allow recovery between samplings.

4. Collect volatile organic analysis samples if required with bucket type bailer (Method III-9).

5. Install clean medical grade silicon tubing in peristaltic pump head.

6. Attach pump to required length of Teflon suction line and lower to midpoint of well screen if known or slightly below existing water level.

7. Consider the first liter of liquid collected as a sample as system purge/rinse. NOTE: If well yield is insufficient for required analysis this purge volume may be suitable for some less critical analysis.

8. Fill necessary sample bottles by allowing pump discharge to flow gently down the side of bottle with minimal entry turbulence. Cap each bottle as filled.

9. Preserve the sample if necessary as per guidelines in Appendix A.

10. Check that a Teflon-liner is present in cap if required. Secure the cap tightly.

11. Label the sample bottle with an appropriate tag. Be sure to complete the tag with all necessary information. Complete chain-of-custody documents and field log book.

12. Place the properly labeled sample bottle in an appropriate carrying container maintained at 4°C throughout the sampling and transportation period.

13. Allow system to drain then disassemble. Return tubing to lab for decontamination.

Sources

Dunlap, W.J., McNabb, J.F., Scalf, M.R. and Crosby, R.L. "Sampling for Organic Chemicals and Microorganisms in the Subsurface," EPA-600/2-77-176, August 1977.

SECTION 4

GASES, VAPORS, AND AEROSOLS

GENERAL

Air monitoring at hazardous waste sites and environmental spills can be quite useful as an indicator of potential safety problems and as a means of screening for the presence of possible airborne contaminants. Monitoring is also important as a means of determining the specific identity and concentration of airborne toxic and hazardous pollutants onsite and the extent of their migration offsite. For the purpose of this document, sampling for gases, vapors and aerosols at hazardous waste sites and environmental spills falls into three general categories: the ambient atmosphere, soil gases, and container headspace gases.

AMBIENT

Ambient concentrations of airborne contaminants are greatly affected by the topography and meteorology of the surrounding area, and the investigator must be cognizant of this when choosing monitoring methods and equipment. Besides the obvious effects of temperature, wind, and precipitation in relation to dispersion and deposition of atmospheric pollutants, heat and sunlight can dramatically increase rates of volatilization and cold and calm may cause stagnant conditions to prevail tending to reduce migration and concentrate pollutants in low-lying areas. Accurate detection of atmospheric pollutants must take into account these and other factors if a successful sampling effort is desired.

Of major importance when discussing the sampling of ambient atmospheres is the use of portable analytical instrumentation. In addition to being portable, these devices need to be rugged and easy to operate and need to provide real time data in order to best meet the requirements inherent to field applications. They must also be proven safe when used in hazardous waste environments. Electrical devices and instruments which utilize flame or combustion principles must be of a type that eliminate the possibility of igniting combustible atmospheres. All instruments used should be "approved" or "certified" by Underwriters Laboratory (UL) or Factor Mutual Systems (FM) according to provisions set forth by the National Electrical Code (NEC).

In order to insure safe operation, the user must also become familiar with the detailed operation and maintenance procedures found only in the specific instrument's operating manual. The investigator should keep in mind that the procedures outlined here are necessarily general and intended only to supplement the instrument operating manual. Investigators must also familiarize themselves with the limitations of each instrument. Inability to detect certain compounds, insensitivity (e.g., contaminants in the solid phase), slow response time, pump rate capacity, etc. are all factors which may affect the safety of the operator and/or quality of the data.

Field instrumentation is invaluable during initial site surveys for assessing the potential hazards that exist. Information of this nature is needed in order to determine the degree of protection required for personnel or to provide direction for further quantification of specific parameters.

Instruments such as portable oxygen indicators and combustible gas detectors would be the instruments of choice when a general safety assessment of an unknown atmosphere is necessary. Such atmospheres present many hazards including oxygen deficiency, explosivity, flammability, etc., and data obtained with these instruments can be used by the onsite safety officer to generally assess the presence of these dangers and dictate precautionary measures to be taken. They can be used to screen pockets or depressions in the land contour, areas in close proximity to drums or spills, or closed in, unventilated rooms which may not have enough oxygen to support life or which allow combustible vapors to concentrate.

Other instruments that are useful for evaluating the hazard potential of ambient or workplace atmospheres are those which utilize flame ionization (FID) and photoionization (PID) detectors. These detectors are important due to the increased levels of sensitivity they can provide (for specific compound classes) and when used in conjunction with chromatographic columns, can specifically characterize and/or identify hazardous materials at spills or dump sites.

The Century OVA and AID Model 550 represent a type of instrumentation utilizing a flame ionization detector and in its simplest form is used to determine the presence of gaseous and/or vapor phase hydrocarbons. These instruments provide a cumulative response to most gaseous/vapor phase organics present as referenced to a single component standard gas (usually methane). The response of such instruments is often termed "total hydrocarbons;" however, this is misleading since not all hydrocarbons are detected, specifically important particulate hydrocarbons (i.e., pesticides and polynuclear aromatics), and polychlorinated biphenyls. In addition, the response to mixtures of vapor phase hydrocarbons depends upon the ratios and the types of organic compounds present and cannot be related to a specific vapor concentration. FIDs do, nonetheless, provide a useful and reliable tool for general assessment purposes.

Photoionization analyzers such as the portable HNU Model P1-101 are also capable of detecting the presence of a wide variety of chemical species, both

organic and inorganic. As with the FID's, photoionization detectors suffer similar limitations of detector response to component mixtures and the inability to respond to certain compounds must be recognized; however, they also provide important information for evaluation purposes.

As stated previously, the usefulness of both portable FID's and PID's can be expanded when used in conjunction with chromatography. The Century units offer a chromatography option which, when used properly, can be quite a valuable tool for aiding in specific compound identification. At present, the HNU P1-101 is not available with a chromatography option; however Spittler and Oi[13] report success with a portable photoionization detector/gas chromatograph (Photovac 10A10, Thornhill, Ontario) capable of sensitivity in the 0.1 to 10 ppb range. In all cases it should be realized that chromatography can be quite complex and demands the skills of an experienced operator to obtain valid and meaningful results.

Additional useful instruments and devices include those adapted from industrial hygiene practices and/or techniques. These include stain detector tubes and personnel collection devices. Detection by these methods is the most specific of all of the devices thus far described. These methods are therefore extremely useful for compound identification and quantification.

Stain detector tubes such as manufactured by National Drager, Matheson-Kitwgawa, Bendix Corporation, and MSA provide an immediate indicator of a specific chemical or species of interest. They are somewhat limited due to small sample volume, interferences, degree of accuracy, operator judgement, etc.; however, they are valuable as a quick, relatively simple, direct-reading method of determining specific gas concentrations.

Collection devices such as solid sorbents, chemical absorbing solutions and filters are the most accurate of the methods used for properly identifying and quantifying species of interest. Use of these methods requires adherence to very specific procedures and conditions of the type found in the "NIOSH Manual of Analytical Methods,"[14] EPA Federal Reference Methods, or specific papers documenting procedures and characteristics of sorbent resins. Collected samples are subsequently analyzed at an offsite analytical laboratory that usually yields an analytical precision and accuracy presently unavailable in most field applications.

It should be noted, at this point, that ambient monitoring, within the context of this section, deals with <u>area monitoring</u> and not <u>personnel monitoring</u>. Although ambient methods can provide information on the types of contaminants present and the relative magnitude of contamination, it is not a substitute for personnel monitoring when worker exposure is the prime concern. In such cases, NIOSH methodologies should be consulted and appropriate methods chosen dependent upon specific monitoring requirements.

METHOD IV-1: DETERMINING OXYGEN CONTENT IN AMBIENT AND WORKPLACE ENVIRONMENTS WITH A PORTABLE OXYGEN MONITOR

Discussion

A portable oxygen monitor has three principle components for operation. These include the airflow system, the oxygen sensing device, and the microamp meter. Air is drawn through the oxygen sensor with a built-in pump or aspirator bulb. The sensor indicates the oxygen content and the information is translated electrochemically to the meter.

Most monitors have meters which indicate the oxygen content from 0-25 percent. There are also oxygen monitors available which indicate concentrations on scales from 0-5 percent and 0-100 percent. The most useful for ambient measurements is the 0-25 percent oxygen content readout. Many instruments also have alarm modes which can be set to activate at a specified oxygen concentration.

Uses

Portable oxygen monitors are invaluable when initially responding to hazardous material spills or waste site situations. They are useful in screening depressions in the land, unventilated rooms, or other areas that may not contain enough oxygen to support life. When used properly the portable oxygen monitor will indicate the percent oxygen in the test atmosphere. Normal oxygen concentration required for respiration is 20.9 percent.

Procedures for Use

1. Make sure instrument is clean and servicable, especially sample lines and detector surfaces.

2. Consult records on instrument maintenance to determine if detector solution should be changed. Some instruments will need this service after as little as 1-2 weeks of use.

3. Check battery charge level. If in doubt, charge battery as detailed in operating manual. Some units have charge level indicators while others have alarms that will indicate a low charge.

4. Verify (if possible) that sample pump is operable when analyzer is on.

5. Turn pump on and, using calibration knob on instrument, calibrate against fresh air (20.9 percent O_2) by aligning meter needle at 20.9 percent.

6. If unit is equipped with alarm mode, set alarm at desired level.

7. Allow for instrument warmup, if necessary, before entering site to take readings.

8. Position intake assembly in close proximity to area in question to get accurate reading.

9. If alarm occurs, personel should evacuate area, unless equipped with supplied air equipment.

10. Some important factors to keep in mind during use are:

    - Slow sweeping motions may assist in the prevention of bypassing problem areas.

    - Operation of instrument in temperatures outside of manufacturer specified operating range may compromise accuracy of readings or damage unit.

    - Presence of known or unknown interfering gases, especially oxidants, can affect readings (for example the Edmont Model 60-400 Oxygen Monitor has interferences of the following gases in concentrations greater than 0.25 percent or 2500 ppm: SO_2, fluorine, chlorine, bromide, iodines and nitrogen oxides). See the operating manual for unit being used.

    - The oxygen detector can also be poisoned (decrease in sensitivity) by exposure to various gases. Some detectors are poisoned by concentration of mercaptans and hydrogen sulfide greater than or equal to 1 percent. See operating manual for unit being used.

    - When relying on alarm mode for warnings of oxygen deficient atmospheres, a manual check of the alarm function at regular intervals is recommended.

    - Wherever applicable, protect instrument with a disposable cover to prevent contamination.

    - Most units will have rechargeable battery packs that provide continuous operation for 8-12 hours. Recharging batteries prior to expiration of the specified interval will insure operation while on a site.

    - More than any other factor, effective utilization of unit requires operator with full understanding of operating principles and procedures for the specific instrument in use.

Sources

Edmont Model 60-400 Combustible Gas/Oxygen Monitor Instruction Manual. Manufactured by Energetics Science, Elmsford, NY 10523.

U.S. Environmental Protection Agency. "Hazardous Materials Response Operations Training Manual." National Training and Operational Center, Cincinnati, OH.

METHOD IV-2: DETERMINATION OF COMBUSTIBLE GAS LEVELS USING A PORTABLE COMBUSTIBLE GAS INDICATOR

Discussion

A combustible gas indicator has three major operational components: air flow system, combustion filament, and ohmmeter. Simply stated, the sample gas is drawn into the unit through a sample line and into the combustion chamber. In the combustion chamber the detector consists of a platinum filament whose resistance is dependent on its temperature. As the sample gas is combusted, changes in the resistance of the filament are measured directly by the ohmmeter as the ratio of combustible gas present to the total required to reach the lower explosive limit (LEL).

The lower explosive limit or LEL (also LFL, lower flammability limit) is defined as the lowest concentration of gas in air which can be ignited by an ignition source and cause an explosion. Conversely, the upper explosive limit or UEL (also UFL, upper flammability limit) is the concentration of gas in air above which there is insufficient oxygen available to support combustion, therefore, no explosion is possible. In general, the instruments respond in the following manner:

- The meter indicates 0.5 LEL (50 percent). This means that 50 percent of the concentration of combustible gas needed to reach an unstable combustible situation is present. If the LEL of the gas is 5 percent, then the instrument indicates a 2.5 percent mixture is present.

- The meter needle stays above 1.0 LEL (100 percent). This means that the concentration of combustible gas is greater than the LEL and less than the UEL and, therefore, immediately combustible and explosive.

- The meter needle rises above the 1.0 (100 percent) mark and then returns to zero. This response indicates the ambient atmosphere has a combustible gas concentration greater than the UEL.

Of the many instruments commercially available for detecting combustible or explosive gas, some are not certified safe for operation in the atmospheres they can detect. It is important to use only those monitors that are certified safe for use in atmospheres greater than 25 percent of the LEL. Organizations that perform this certification are the Mine Safety and Health Administration (MSHA), Underwriters Laboratory (UL), and Factory Mutual (FM).

Some combustible gas monitors provide readouts in units of percent LEL, some in percent combustible gases by volume, and some have scales for both. Many situations may occur where the types of combustible gases to be encountered are unknown. In such instances, a meter calibrated to provide readings in units of percent LEL of methane will provide a more sensitive indication of the explosivity of the sample gas and thus provide a margin for

error. The operator should be familiar with the LEL concentrations for specific gases to effectively utilize a unit providing data in percent combustibles (by volume) only.

Although monitors can be purchased that are factory calibrated using gases such as butane, pentane, natural gas, or petroleum vapors, methane calibration is normally used and completely satisfactory for use in ambient atmospheres. The LEL of methane is 5 percent by volume in air, therefore, an air mixture containing 5 percent methane will be read as 100 percent LEL and will be explosive if a source of ignition is present. When combustible gases other than methane are sampled, the relative response of the detector for these other gases must be considered. The sensitivity of the detector and the lower explosive limit differences will produce varying meter responses in terms of percent LEL for the same concentrations. Actual correlation equations that will convert the percent LEL (based on methane) read by the unit to a percent LEL for another combustible gas can usually be found in the operating manual.

Most units also have alarm systems which can be adjusted for various LEL's and several are available that incorporate oxygen analyzers.

Uses

In general, combustible gas detectors are used to determine the potential for combustion or explosion of unknown atmospheres. These instruments, in combination with oxygen detectors and radiation survey instrumentation, should be the first monitors used when entering a hazardous area. In this sense they provide a general indication of the degree of immediate hazard to personnel and can be used to assist the safety officer in making decisions on levels of protection required at the site.

Procedure for Use

1. Make sure instrument is clean and serviceable, especially sample lines and detector surfaces.

2. Check battery charge level. If in doubt, charge battery as described in operating manual. Some units have charge level meters, while others have only low charge alarms.

3. Turn unit to ON position, and allow instrument sufficient warmup time.

4. Verify (if possible) that sample pump is operable when analyzer is ON.

5. With the intake assembly in gas-free ambient air, zero the meter by rotating the zero control until the meter reads 0 percent LEL.

6. Calibrate unit against known concentration of methane by rotating the calibration control until the meter reads the same concentration as the known standard.

7. If necessary, adjust alarm setting to appropriate combustibility setting.

8. Position intake assembly in close proximity to area in question to get accurate reading.

9. If alarm occurs, personnel should evacuate area.

10. If instrument malfunction occurs, personnel should evacuate area.

11. Some important factors to keep in mind during use are:

    - Slow sweeping motions of intake assembly will help assure that problem atmospheres are not bypassed.

    - Operation of unit in temperatures outside of recommended operating range may compromise accuracy of readings or damage the instrument.

    - Platinum filament detectors will be poisoned (reduced in sensitivity) by gases such as leaded gasoline vapors (tetraethyl lead) and sulfur compounds (mercaptans and hydrogen sulfide).

    - Many combustible gas detectors are not designed for use in oxygen-enriched atmospheres. If this condition is encountered or suspected, personnel should evacuate the area. Specially designed units are available for operation in such atmospheres.

    - Unless a charcoal filter is employed prior to the detector there is no distinction between petroleum vapors and combustible gases.

    - Accurate data depends on regular calibration and battery charging. See operating manual.

    - More than any other factor, effective utilization of unit requires operator with full understanding of operating principles and procedures for the specific instrument in use.

Sources

Edmont Model 60-400 Combustible Gas/Oxygen Monitor Instruction Manual, Manufactured by Energetics Science, Elmsford, NY 10523.

U.S. Environmental Protection Agency. "Hazardous Materials Incident Response Operators Training Manual." National Training and Operational Training Center, Cincinnati, Ohio.

METHOD IV-3: MONITORING ORGANIC VAPORS USING A PORTABLE FLAME IONIZATION DETECTOR

Discussion

A flame ionization detector (FID) will respond to most organic vapors as they form positively charged ions when combusted in a hydrogen flame. The magnitude of the response is a function of the detector sensitivity and the ionization properties of the particular compound as well as its concentration. As a result, this signal must be compared to that generated by calibration with a known concentration of a standard gas. The sample concentration is then reported as the ppm equivalent of the calibration compound. Most units are calibrated with a known concentration of methane; however, almost any gaseous hydrocarbon that produces a response can be used. Many models also have built-in calibration circuits which can insure that the electronic response to a known signal remains constant.

Some models can be equipped with an option that will allow for the chromatographic separation of the sample gas constituents. This allows for a tentative qualification and quantification of the resultant peaks which have retention times equal to those of known standards. This option requires the use of a chart recorder for recording the peak areas and retention times and, in such a mode, prevents the instrument from providing a continuous readout. Use of a chromatographic option also requires additional expertise if reliable, consistent results are desired.

Most portable FID's rely on the sample gas to supply the combustion air to the detector flame, so they are designed to operate in ambient atmospheres with relatively normal oxygen concentrations (21 percent). This design precludes the sampling of process vents, poorly ventilated or sealed containers, or any sample gas hydrocarbon concentration sufficient to reduce the available oxygen or otherwise saturate the detector. In such instances adaptations are usually available to supply a source of oxygen from a compressed gas bottle or introduce the gas through a dilution system with a known (calibrated) dilution factor.

Uses

A portable FID is useful as a general screening tool to detect the presence of most organic vapors. It will not, however, respond to particulate hydrocarbons such as pesticides, PNAs and PCBs. It can be used to detect pockets of gaseous hydrocarbons in depressions or confined spaces, screen drums or other containers for the presence of entrapped vapors, or generally assess an area for the presence of elevated levels of vapor phase organics.

Procedure for Use

The procedures presented in this section are intended to apply to any portable FID; therefore, detailed operating instructions must be obtained from the operating manual of the specific unit to be used.

1. Check battery charge level indicator; if in doubt, recharge battery as described in manual.

2. Turn instrument on and allow adequate warmup time.

3. If equipped with internal calibration capability, perform instrument calibration. Perform zero and other calibration procedures as described in operating manual.

4. If equipped with an alarm mode, set alarm at desired concentration.

5. Turn on pump and leak check by covering sample inlet and observing rotameter. Indicator ball should drop to zero level.

6. With pump operating, open hydrogen gas storage tank valve and open supply regulator to allow fuel gas flow to detector chamber.

7. Depress igniter switch, observe indicator needle for positive response and listen for a "pop." If flame fails to light, depress ignite switch again.

8. Once detector flame is lit, unit is ready for use.

9. If calibration to a specific hydrocarbon species is desired, complete this procedure as per the manufacturers instructions.

10. Hold sample probe in close proximity to area in question as low sample rate allows for only very localized readings.

11. Slow sweeping motion will help prevent the bypassing of problem areas. Make sure batteries are recharged within time frame specified in operator manual. Usual length of operating time between charges is 8-12 hours.

11. Some units have alarms that signal operator if detector flame goes out. If this alarm sounds, evacuate all personnel and relight flame in known safe area then reenter site.

12. Monitor fuel and/or combustion air supply gauges regularly to insure sufficient gas supplies.

13. High background readings after prolonged use may indicate sample probe and/or in-line filters (prior to detector) need to be cleaned. Use of pipe cleaners or clean air blown backwards through filters is adequate. Do not use organic solvents as detector will respond to solvent as well.

14. Representative readings will also depend on performance of routine maintenance as described in detail in operating manual. Also, since unit contains pressurized gas supplies, perform leak check procedures regularly, as leaking hydrogen gas is explosive.

15. As with any field instrument accurate results depend on the operator being completely familiar with the operator's manual for the particular unit.

16. Concentrations beyond the greatest scale factor of the instrument or in excess of 30 percent (0.3) LEL of the sample component require system modification. Similar requirements are the result of sampling in oxygen-deficient atmospheres. This usually entails increasing the combustion air to the detector by sample dilution or by an independent air supply. A dilution system is simply the apparatus required to supply a filtered controlled air supply for analyzers that utilize a sample gas stream as the carrier gas, combustion air and the sample. A dilution system can, by selection of various critical orifices, dilute a gas stream by ratios up to 100:1.

17. Always be sure that carrier gas flow (usually sample gas) is initiated prior to lighting the detector flame.

Sources

Analabs, A Unit of Foxboro Analytical. "Operating and Service Manual for Century Systems' Portable Organic Vapor Analyzer (OVA) Model OVA-108 and Optional Accessories, Revision C," North Haven, Connecticut.

METHOD IV-4: MONITORING TOXIC GASES AND VAPORS USING A PHOTOIONIZATION DETECTOR

Discussion

This method is designed to detect, measure and record real-time levels of many organic and inorganic vapors in air. A photoionization detector (PID) will respond to most vaporous compounds in air that have an ionization potential less than or equal to that supplied by the ionizing source in the detector, an ultraviolet lamp. The magnitude of this response is a function of the detector sensitivity and the concentration and ionization properties of the individual compound. Though it can be calibrated to a particular compound, the instrument cannot distinguish between detectable compounds in a gaseous matrix and therefore indicates an integrated response in relation to the response factors of all ionizable species present.

The analyzer employs the principle of photoionization for detection. This process is termed photoionization since the absorption of ultraviolet light (a photon) by a molecule leads to ionization via:

$$RH + h\nu = RH^+ + e^-$$

where RH = trace gas,

$h\nu$ = a photon with an energy $\geq$ Ionization Potential of RH

The sensor consists of a sealed ultraviolet light source that emits photons which are energetic enough to ionize many trace species (particularly organics) but do not ionize the major components of air such as O_2, N_2, CO, CO_2, or H_2O. A chamber adjacent to the ultraviolet source contains a pair of electrodes. When a positive potential is applied to one electrode, the field created drives any ions, formed by absorption of UV light, to the collector electrode where the current (proportional to concentration) is measured. This signal is amplified and conditioned and then sent to the output display.

To minimize adsorption of various sample gases, the ion chamber is usually made of an inert fluorocarbon material. The sample line is kept as short as possible, and a rapid flow of sample gas is maintained through the ion chamber volume.

Uses

The portable photoionization detector is useful as a general survey instrument at waste sites and hazardous material spills. As such, it is similar to an FID in application; however, its capabilities are somewhat broader in that it can detect certain inorganic vapors. Conversely, the PID is unable to respond to certain low molecular weight hydrocarbons (e.g., methane and ethane) that are readily detected by FID.

Procedure for Use

The procedural steps delineated herein are by design general. The operating manual for the unit being used should be consulted for specific instructions.

1. Check battery charge level. If in doubt, charge battery as described in manual.

2. Turn unit on. Verification of UV lamp operation can be made by looking into sensor for purple glow of the lamp.

3. Perform zero and calibration procedure as described in operating manual. Calibration for specific compounds can be performed so that instrument response is proportional to the calibration gas concentration.

4. If so equipped, set alarm at desired level.

5. Once calibrated, unit is ready for use.

6. Position intake assembly in close proximity to area in question as sampling rate allows for only very localized readings.

7. A slow sweeping motion of intake assembly will help prevent the by-passing of problem areas.

8. Be prepared to evacuate the area if preset alarm sounds. Operators utilizing supplied air systems may not need to consider this action.

9. Static voltage sources such as AC power lines, radio transmissions, or transformers may interfere with measurements. See operating manual for discussion of necessary considerations.

10. Regular cleaning and maintenance of instrument and accessories will assure representative readings.

11. As with any field instrument, accurate results depend on the operator being completely familiar with the operator's manual for the unit in use.

Sources

HNU Systems Inc. "Instruction Manual for Model PI 101 Photoionization Analyzer." 1975.

METHOD IV-5: STAIN DETECTOR TUBE METHOD FOR SAMPLING GASEOUS COMPOUNDS

Discussion

A relatively simple method for determining concentrations of specific gaseous pollutants is through the use of stain detector tubes. They are usually calibrated in ppm for easy interpretation and are either direct reading or referenced to a supplied concentration or color change chart. The limiting factors in the application of this methodology are the small variety of compounds for which detector tubes are available, interfering agents and cross-sensitivities, short sampling time, and the extremely small sample volume used. Most detector tubes are species-specific; however, some detect groups of compounds, e.g., "total hydrocarbons."

The detector tubes are specific for individual compounds and require specific sampling techniques. This information is supplied with the tubes and details the required sample volume, proper tube preparation and insertion into the pump as well as a discussion of the applicability and limitations of the tube. In general the tubes are opened by snapping off the tips on either end and inserting them into the pump so the arrow on the tube indicating flow points toward the pump. The required sample volume is then pulled through the tube. An indicator chemical in the tube will demonstrate a color change, the length of which is proportional to the concentration of the compound in question.

The detector tube and pump are the two major components of the system. Pumps used for drawing air through the tubes come in two basic forms: bellows pump and piston-type (syringe). These pumps are manufactured under strict specifications so as to draw only a specified volume of gas and are designed to be used with tubes of the same manufacturer.

Uses

Stain detector tubes are useful for screening sources to verify the presence of suspected compounds and subsequently allow for a sufficient degree of quantification. They are generally inadequate for ambient air sampling applications due to the low sample volumes collected. They are more useful for detection of compounds at higher levels such as in drums, confined work areas, pockets or depressions, etc.

Procedure for Use

1. Perform necessary pump leak check procedures. This is usually accomplished by plugging pump inlet, drawing a vacuum on the pump, holding it for at least 1 minute and determining visually if leak allows bellows to inflate or piston fails to return completely into pump. The pump can be plugged using a sealed detector tube.

2. Break open both ends of detector tube, insert correct end into pump, and sample according to instructions. Most tubes have some kind of indicator (i.e., arrow, prefilter) that helps determine which end of tube is the inlet. The direction of the concentration scale is also a guide.

3. Visually inspect tube for color changes and record corresponding gas concentration.

4. Additional Notes

   - Some tube manufacturers advise that tubes showing negative results can be reused before they are rendered useless. The error potential and risk associated with reusing a previously opened tube is not advisable when working with hazardous materials.

   - Some types of detector tubes have reagent ampules which must be broken to activate the indicator. Also, some procedures call for use of multiple tubes, in series for multiple parameter detection, or specific interference removal.

   - The standard range of measurement or the detector sensitivity can usually be extended by changing the number of pump volumes pulled through the tube. The upper range limit can be extended by decreasing the number of pump volumes, and the lower range limit can be extended by increasing the number of pump volumes.

   - Tubes and pumps of different manufacturers should not be used interchangably. For example, Drager tubes should be used only with Drager pumps.

Sources

Dragerwerk Ag Lubeck. "Detector Tube Handbook, Air Investigations and Technical Gas Analysis with Drager Tubes." 4th Edition, August 1979.

Matheson Safety Products. Operating Instructions for Matheson-Kitagawa Detector Tubes, Matheson Gas Products Model 8014 - Toxic Gas Detector.

METHOD IV-6: SAMPLING FOR VOLATILE ORGANICS IN AMBIENT AIR USING SOLID SORBENTS

Discussion

Solid sorbent cartridges can be used quite successfully to collect samples of volatile organics in ambient air and workplace environments. The sample apparatus consists of a sampling cartridge packed with a solid sorbent of desirable characteristics (e.g., Tenax-GC, activated charcoal, XAD-2) and a pump system capable of maintaining a constant flow rate across the collection media for a specified period of time.

In principle, organic vapors present in the air are adsorbed on the collection media and subsequently either thermally or chemically desorbed in the laboratory. An aliquot of the desorbed sample is then subjected to chromatographic analysis (either capillary or packed column) followed by flame ionization or mass spectrometric detection.

At present, Tenax-GC is the preferred sorbent for sampling volatile organics in ambient air.[15] It is hydrophobic and thermally stable up to 360°C, and permits thermal desorbtion of volatile organics beyond n-eicosane at a temperature of 280°C.[16] Glass or glass-lined stainless-steel sampling cartridges of various sizes and configurations are available and can be purchased prepacked or packed to specifications in the laboratory. In any case, the sorbent and/or prepacked tubes must be thoroughly precleaned and conditioned prior to use. A recommended procedure involves precleaning a batch of Tenax by Soxhlet extraction in methanol first, and then pentane for 24 hours each. The sorbent is then oven dried, packed in tubes and conditioned under carrier gas flow at 250°C (desorbtion conditions) for 2 hours. The conditioning step is conducted twice and as a precaution can be performed a final time (1 hour run) just prior to use.

Other sorbents or combination of sorbents may be applied with equal success depending upon the nature of the ambient environment and the specific species of volatiles under investigation. Monsanto Research Corporation reports success with a combination sorbent system based on Tenax-GC, Porapak R, and Ambersorb XE-340 which has been used to collect a broad range of organic compounds.[17] NIOSH procedures may also be used and the "NIOSH Manual of Analytical Methods"[14] should be consulted where applicable. Finally, if the detection of specific organics is desired, the characteristics of the compound and sorbent of interest should be researched[18,19,20] and all sampling parameters adjusted to meet these criteria.

Sorbent cartridges should be stored in Teflon-capped culture tubes prior to sampling and during shipment to the laboratory. Culture tubes should also be wrapped in foil to limit exposure of sampling cartridges to UV light. Analysis should be instituted as quickly as possible in order to prevent sample degradation. Schlitt, et al.,[16] recommend a storage time of 48 hours; however, this is somewhat impractical and a maximum storage period of 30 days has been used successfully in a previous study.[21,22] In any event, sorbent cartridges should be stored at 4°C during transport and storage.

Personal monitoring pumps are available from a number of vendors and range in sophistication (and, accordingly, price) from very simple models to programmable ones capable of compensating for increasing pressure differential in addition to other features. Care should be taken to select a pump capable of operating in the desired flow rate range and which has features most likely to be used by the investigator.

The outlined procedure utilizes a borosilicate glass tube, outside diameter 16 mm (5/8") by 10 cm in length. The tube is packed with 1.2 grams of Tenax-GC sorbent with a plug of glass wool at each end (double plug at inlet). The personal monitoring pumps can be any low-flow model capable of maintaining an approximate flow rate of 35 cm^3/minute.

This nominal flow rate of 35 cm^3/minute is maintained across the sorbent for 12 hours. Slightly higher flow rates and shorter time periods can be used; however, the total volume sampled in any case should not exceed 25 liters.

Uses

The procedure outlined below utilizes a Tenax-GC packed sampling cartridge and a pump system capable of maintaining the desired flow rate for the specified sampling period and is particularly useful for general qualitative screening of ambient atmospheres for volatile organics. It is based on a procedure which was used successfully for qualitative and quantitative analysis of the volatile species listed in Table 1.[21,22] A brief review of the literature[16,23,24,25,26,27] reveals that a number of additional compounds (Table 2) have been analyzed either qualitatively or quantitatively using modifications of the procedure described herein. It should be noted, however, that since the compounds listed in Table 2 are taken from literature applications of similar methods, testing or further review should be performed to perfect and prove the method for these compounds prior to actual sampling and analysis.

Procedures for Use

1. Calibration Procedure*

   a. Select a set of sample pumps and assemble necessary equipment (see Figure 16).

   b. Measure ambient air temperature, relative humidity, and barometric pressure. Determine water vapor pressure from tables and adjust vapor pressure dependent upon relative humidity.

---

*This procedure does not take into account personal monitoring pumps with pressure compensation and programmable timers. If these are being used, refer to the manufacturers' instructions for calibration.

TABLE 1. VOLATILE ORGANICS COLLECTED WITH A TENAX SORBENT SAMPLING SYSTEM USING PARAMETERS OUTLINED IN METHOD IV-6[21,22]

Quantitative Analysis	Qualitative Analysis
Benzene	Chloroform
Carbon tetrachloride	1,2-Dichloroethane
Chlorobenzene	2,4-Dichlorotoluene
o-Chlorotoluene	o-Chlorobenzaldehyde
p-Chlorotoluene	p-Chlorobenzaldehyde
1,2-Dibromoethane	Benzyl Chloride (α-chlorotoluene)
o-Dichlorobenzene	1,1-Dichloroethane
p-Dichlorobenzene	1,1-Dichloroethylene (vinylidene chloride)
1,1,2,2-Tetrachloroethylene	1,2-Dichloroethylene
Toluene	Dichloromethane
	Phenol
	o-Xylene
	m-Xylene
	p-Xylene

TABLE 2. LITERATURE SUMMARY - VOLATILE ORGANICS AMENABLE TO COLLECTION BY TENAX SORBENT CARTRIDGES

Component	Reference(s)
N-Nitroso dimethyl amine	23
ß-Propiolactone	23
Ethyl methansulfonate	23
Nitromethane	23
Glycidaldehyde	23
Butadiene diepoxide	23
Styrene Epoxide	23
Aniline	23
Bis (chloromethyl) ether	23
Bis (2-chloromethyl) ether	23
Diethyl Sulfate	24
Acrolein	24
Propylene Oxide	24
Cyclohexene Oxide	24
Styrene Oxide	24
Acetophenone	24, 16
1,2-Dibromo methane	25
1,2-Dichloro ethane	25
Methanol	26
Ethanol	26
Propanol	26
Ethyl Acetate	26
Acetone	26, 16
1,2,4-Trichlorobenzene	27
1,2,3,5-Tetrachlorobenzene	27
Pentachlorobenzene	27
Hexachlorobenzene	27

(continued)

TABLE 2 (continued)

Component	Reference(s)
Bromoform	27
1,2-Dibromomethane	27
Phenol	27
p-Chlorophenol	27
2,4,6-Trichlorophenol	27
Diphenyl Oxide	27
o-Phenyl phenol	27
Pentachlorophenol	27
n-Pentane	16
2-Methyl pentane	16
3-Methyl pentane	16
n-Hexane	16
Heptane	16
Trichloroethylene	16
n-Octane	16
Ethylbenzene	16
n-Nonane	16
Benzaldehyde	16
Propylbenzene	16
Trimethylbenzene	16
o-Ethyl toluene	16

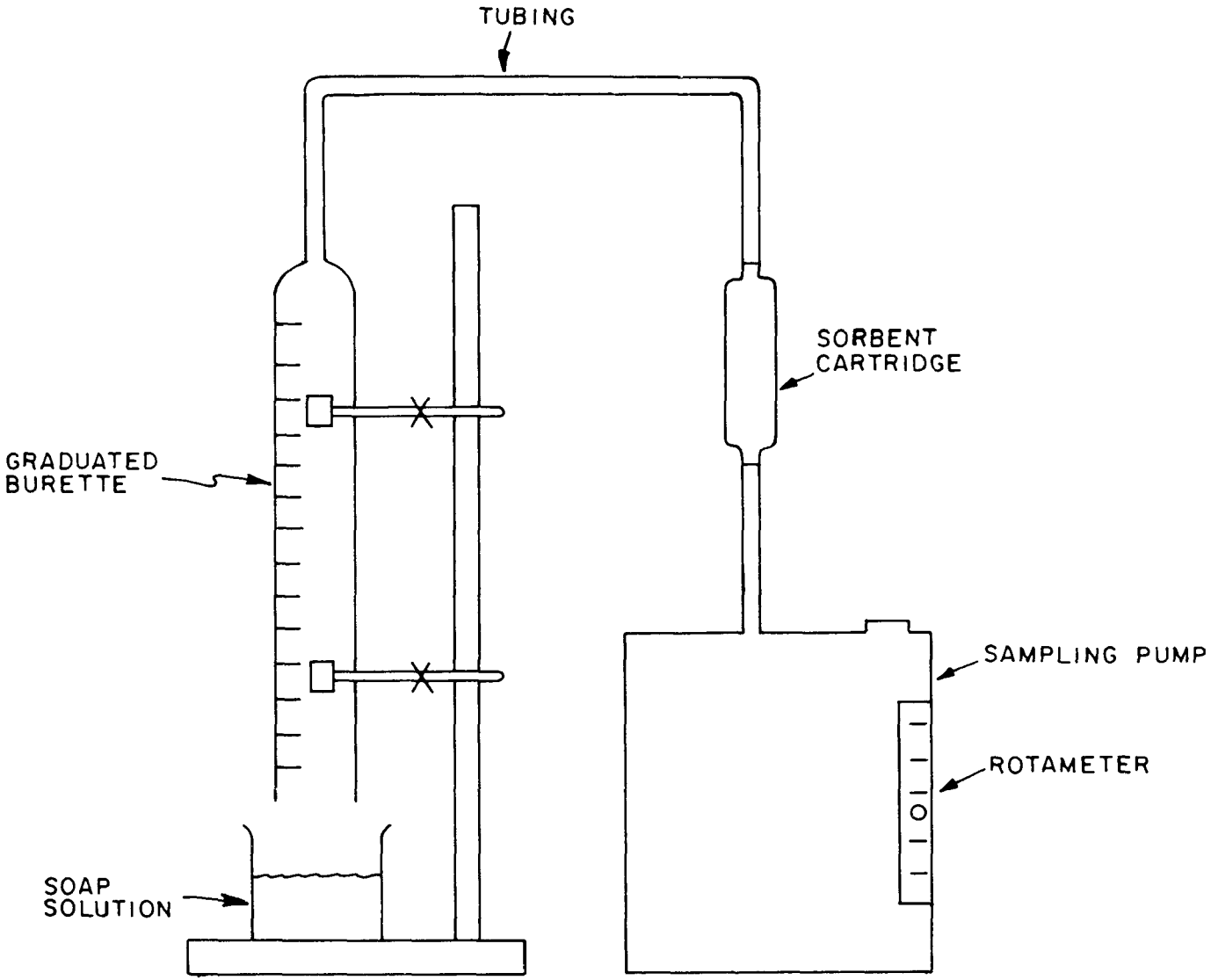

Figure 16. Schematic of calibration system.

c. If battery test is available, check battery.

d. Place sorbent cartridge in line and start pump. Allow pump to stabilize.

e. Determine flow rate with bubble tube flow meter. Use the following equation to correct for Standard Temperature and Pressure.

$$\text{STP Flow Rate} = \frac{\text{Bubble Tube Volume (cc)}}{\text{Travel Time (min)}} \times \frac{P_F - P_V}{P_S} \times \frac{T_S}{T_F}$$

where:

P_F = atmospheric pressure (in Hg)

P_V = water vapor pressure at calibration temperature and relative humidity (in Hg)

P_S = standard atmospheric pressure (29.92 in Hg)

T_S = standard temperature (273°K)

T_F = ambient temperature of calibration (°K)

f. Adjust sampler flow rate to approximately 35 cm^3/min. Verify that flow rate has been achieved by checking against bubble tube three times. Calculate STP flow rates and calculate a mean value for the three readings (deviation should not exceed 5%).

g. Mark level on rotameter (if present) for reference.

2. Sampling Procedure

a. Assemble sampling train. The train shown in Figure 17 is useful if breakthrough determinations are desired; however a sampling train with only a single cartridge could be used for qualitative determinations. Set train up at sampling location. A tripod, music stand, or similar device can be used to hang the sampler.

b. Record all initial information (time, counter reading, cartridge number, pump number, sampler, blank number, etc).

c. Start pump and observe rotameter (if present) to determine if desired flow rate is being maintained. Adjust if necessary.

d. Periodically check pump to determine if flow rates are being maintained. Adjust if necessary.

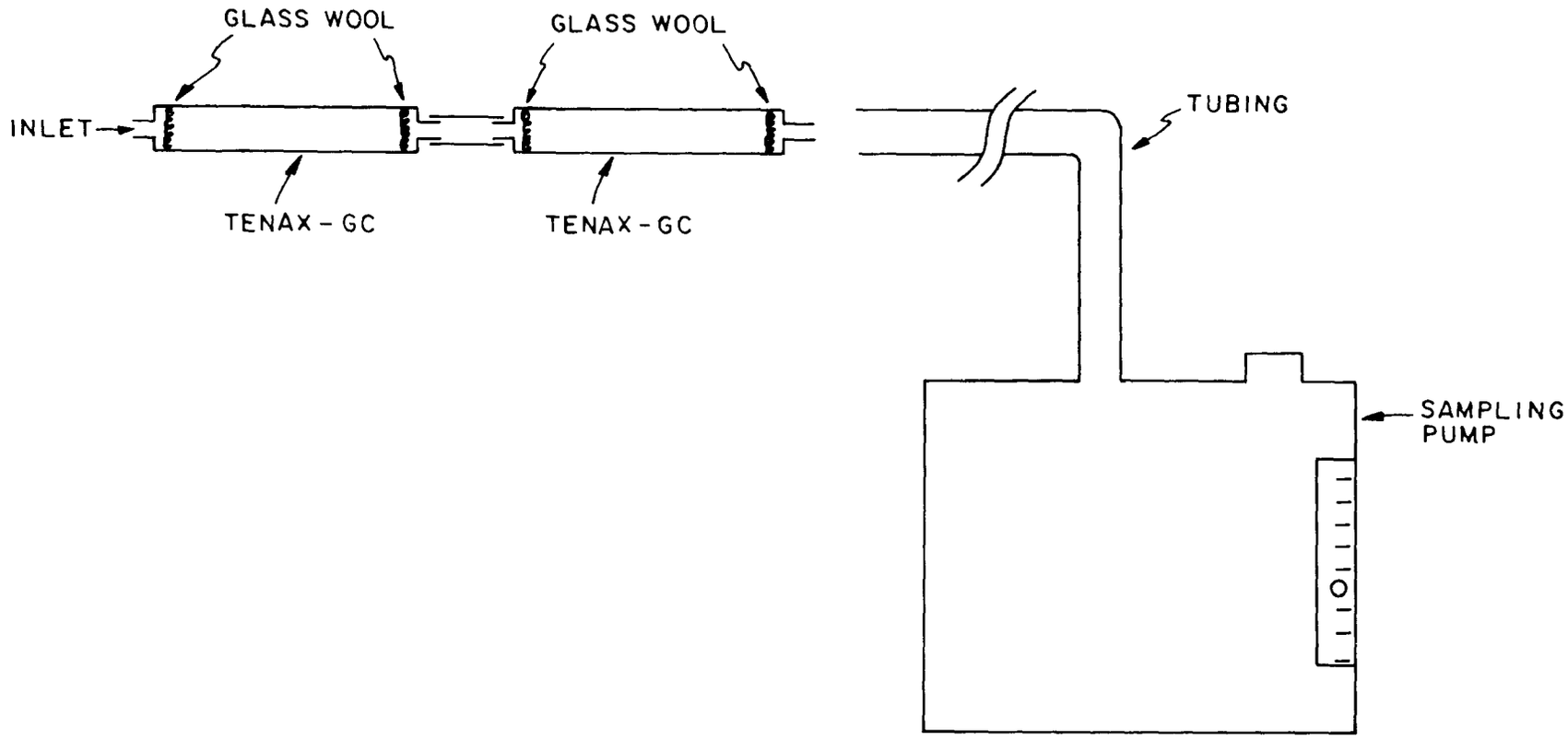

Figure 17. Schematic of Tenax sampling train using backup cartridge.

e. Allow pump to run for twelve (12) hours. A shorter sampling time and slightly higher flow rate can be used as long as the total volume sampled does not exceed 25 liters.

f. Determine final flow rate by observing rotameter. If a more accurate determination is desired, recheck flowrate with a bubble tube as described under Calibration Procedures. If flowrate has changed by ± 5 percent, note in field log.

g. Shut off sampling pump and record all information at end of sampling period (counter reading, time, barometric pressure, problems).

h. Remove Tenax cartridges and place into clean culture tubes. Use caution when handling tubes. If possible wear clean nylon gloves. Make sure to label which tube was first and which was backup.

i. Place chain-of-custody tag on sample container and fill out chain-of-custody log.

j. Store sample at 4°C and protect from sunlight prior to shipment to the laboratory.

Sources

GCA Corporation. "Quality Assurance Plan, Love Canal Study, Appendix A, Sampling Procedures." EPA Contract 68-02-3168.

GCA Corporation. "Quality Assurance Plan, Love Canal Study, Appendix B, Analytical Procedures." EPA Contract 68-02-3168.

GCA Corporation. "Guidelines for Air Monitoring at Hazardous Waste Sites - Draft." EPA Contract 68-02-3168. May 1982.

METHOD IV-7: COLLECTING SEMIVOLATILE ORGANIC COMPOUNDS USING POLYURETHANE FOAM

Description

Polyurethane foam (PUF) has been shown to be an excellent collection medium for trapping a variety of semivolatile organic compounds. Foam plugs are cut from the type of PUF used for furniture upholstery, pillows, and mattresses and Soxhlet extracted with high grade hexane (pesticide quality or equivalent) prior to being fitted into specialized sampling cartridges. A known volume of air is drawn through the collection media to trap the airborne organics.

Cylindrical polyurethane foam plugs (polyether type, 0.021 gm/cm^3) are cut from 3-inch stock using a 25 mm circular template. The soxhlet extracted plugs are then placed (under slight compression) in 22 mm (inside diameter) by 10 cm long hexane rinsed glass tubes. The glass tubes are constructed from 22 mm (inside diameter) stock which has been tapered at one end to facilitate attachment to the sampling pump. A teflon reducing adaptor can also be fabricated which permits attachment to the sampling pump with no modification to the glass tube.

Any high-volume personnel sampling pump capable of maintaining a constant flow rate of 3 to 4 liter/minute can be used. Samples are collected at this nominal flow rate for between 8 to 12 hours allowing a total sample volume of between 1 to 4 cubic meters (m^3).

Polyurethane foam has been shown to be excellent for trapping a wide variety of semivolatile organic compounds in ambient air including numerous chlorinated pesticides,[28,29,30,31] polychlorinated biphenyls (PCBs),[28,29,30,32] polychlorinated naphthalenes,[29] herbicides[30,33] and their corresponding methyl esters,[30,33] organophosphorus pesticides,[29,30] chlorinated benzenes,[30] chlorinated phenols,[30] and polynuclear aromatic hydrocarbons.[28,34] Table 3 lists the representative components of the above compound classes that have been collected in ambient air using this technique.

Uses

This procedure and modifications of this procedure have been used successfully to collect airborne chlorinated organics including pesticides, PCBs, and a variety of chlorinated benzenes and phenols and is generally applicable to the measurement of such compounds in the ng/m^3 to $\mu g/m^3$ range when sensitive analytical techniques are employed (GC/Electron Capture). These methods are generally not applicable for volatile organics in ambient air nor are they applicable for differentiating between vapor phase organics and those adsorbed on particulate matter. When collection of such compounds is desired, it will be necessary to utilize separate collection media (Tenax-GC, filters, etc.) or combination cartridges. Lewis and MacLeod[30] describe a combination cartridge which includes a prefilter (particulates) and a sampling cartridge packed with a PUF or PUF/Tenax "sandwich" which may be useful for multiple species screening applications.

TABLE 3. ORGANICS COLLECTED IN AMBIENT AIR USING PUF PROCEDURES

Polychlorinated Biphenyls (PCBs)	Herbicides
Aroclor 1016	2,4-D esters
Aroclor 1221	Isopropyl
Aroclor 1232	Butyl
Aroclor 1242	Isobutyl
Aroclor 1248	Isooctyl
Aroclor 1254	2,4,5-T N-butyl ester
Aroclor 1260	Bromoxynil
Chlorinated Pesticides	Triallate
Chlordane (cis, trans)	Trifluralin
Heptachlor	Polynuclear Aromatic Hydrocarbons (PAHs)
DDE	Phenanthrene
Dieldrin	Anthracene
p,p'-DDE	Fluoranthene
p,p'-DDT	Pyrene
o,p'-DDT	Benz(e)acenaphthylene
α-BHD	Polychlorinated Naphthalenes
γ-BHC (Lindane)	Halowax 1001
Hexachlorobenzene	Halowax 1013
Toxaphene	Chlorinated Benzenes
Endrin	1,2,3-trichlorobenzene
Endosulfan I	1,2,3,4-tetrachlorobenzene
Aldrin	Pentachlorobenzene
Mirex	1,3,5-trichlorobenzene
Organophosphorus Pesticides	Pentachloronitrobenzene
Diazinon	Chlorinated Phenols
Methyl Parathion	2,4-dichlorophenol
Malathion	2,4,6-trichlorophenol
Parathion	Pentachlorophenol
Ethyl Parathion	2,4,5-trichlorophenol
Dichlorvos	
Ronnel	
Chlorpyrifos	

The investigator should keep in mind that the procedure described herein is meant, in its broadest application, to be a screening technique and is therefore necessarily general. If specific conditions, compounds of interest, concentrations, detection requirements, etc. are known, such factors should be carefully considered and the appropriate literature sources reviewed to allow for procedure optimization relevant to specific needs.

Procedures for Use

1. Calibrate the sampling pump as per the procedure outlined in Method IV-6. Adjust to a target flow rate of 3 to 4 liters/minute.

2. Sampling procedures

   a. Assemble sampling train (see Figure 18). Set train up at location and hang sampler on a tripod, music stand, or similar device.

   b. Record all initial information (time, counter reading, cartridge number, pump number, sampler, blank number, etc).

   c. Start pump and observe rotameter (if present) to determine if appropriate flow rate is being maintained.

   d. Periodically check pump to determine if flow rates are being maintained. Adjust if necessary.

   e. Allow pump to run for desired time period (8 to 12 hours).

   f. Determine final flow rate by observing rotameter. If a more accurate determination is desired, recheck flow rate with a bubble tube as described under Calibration Procedure in Method IV-6. If flow rate has changed by ± 5 percent, note in field log.

   g. Shut down sampling pump and record all information at end of sampling period (counter reading, time, barometric pressure, problems).

   h. Remove PUF cartridge (use clean plastic or latex gloves) and cover with hexane rinsed aluminum foil.

   i. Place foil-covered cartridge in hexane rinsed glass bottle that has been properly labeled.

   j. Place chain-of-custody tag on sample and fill out chain-of-custody log.

   k. Refrigerate samples prior to and during shipment to the laboratory.

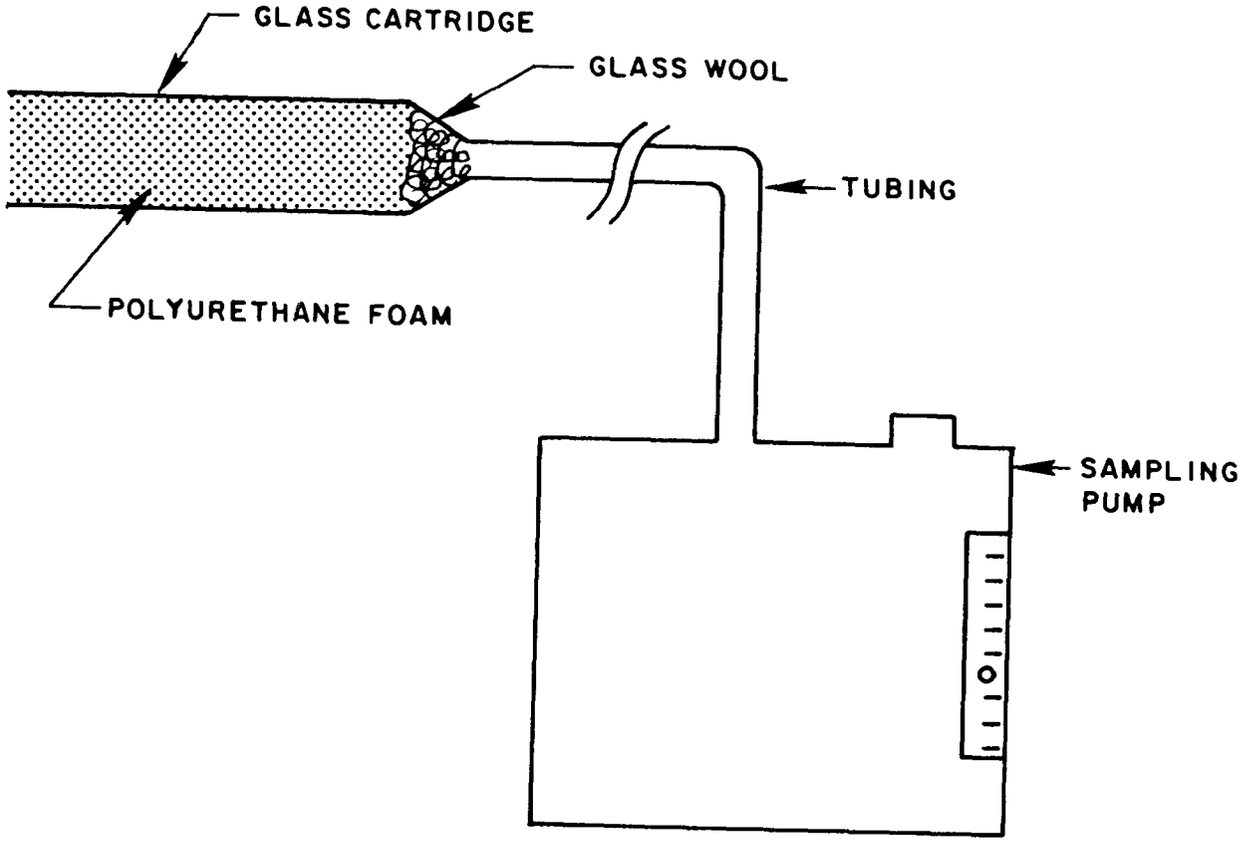

Figure 18. Schematic of Polyurethane Foam (PUF) sampling train for collection of chlorinated pesticides and PCBs.

Sources

GCA Corporation. "Quality Assurance Plan, Love Canal Study, Appendix A, Sampling Procedures." EPA Contract 68-02-3168.

Lewis, Robert G. and MacLeod, Kathryn E. "Portable Sampler for Pesticides and Semivolatile Industrial Organic Chemicals in Air." Analytical Chemistry, Volume 54, pp. 310-315, 1982.

METHOD IV-8: DETERMINATION OF TOTAL SUSPENDED PARTICULATE IN AMBIENT AIR USING HIGH-VOLUME SAMPLING TECHNIQUE

Description

Ambient air is drawn into a covered housing and through a filter by means of a high-volume blower at flow rates between 1.13 to 1.70 m^3/min (40 to 60 ft^3/min). Particles within the size range of 100 to 0.1 μm diameter are collected on the filter although sampler flow rate and geometry tends to favor particles less than 60 μm aerodynamic diameter. The mass concentration of suspended particulate is computed by measuring the mass of collected particulates (gravimetric analysis) and the volume of air sampled.

High volume ambient air samplers (Figures 19 and 20) are readily available from a number of vendors and should meet the specifications described in 40 CFR Part 50 Appendix B--Reference Method for the Determination of Suspended Particulates in the Atmosphere (High Volume Method).[35] Filter media (glass fiber filters) with a collection efficiency of at least 99 percent for particles of 0.3 m diameter are also specified for use. Other types of filter media (e.g., paper) or specially prepared filters may be desired in instances where specific analysis is contemplated or low background levels of certain pollutants is desired.

After sample collection, pretared filters are analyzed gravimetrically to determine the total particulate loading. Trace metal analyses may be accomplished by extracting all or part of the filter and analyzing the extract accordingly (i.e., atomic absorbtion, ICP). It should be noted that when trace metal analysis is desired, it is extremely important to submit blank filters from each lot to the laboratory to determine background concentrations.

Modified high-volume sampling techniques have also been used to efficiently collect certain organic compounds. Stratton, et al.,[32] and Jackson and Lewis[36] describe samplers modified to include a throat extension between the filter housing and blower that contains polyurethane foam sorbent. This arrangement can also be used to trap polynuclear aromatic hydrocarbon (PNAs). Additional sorbents or combinations can be used dependent upon specific collection requirements. As with trace metal analysis, it is important that blank filters and sorbents be submitted to the laboratory to determine the existence of background concentrations.

Uses

The described procedures can be used to collect Total Suspended Particulate (TSP) matter in ambient air. The collected material may be extracted and analyzed for trace metals or particulate related organics of low volatility. In the latter case, backup collection techniques (PUF) would be advisable.

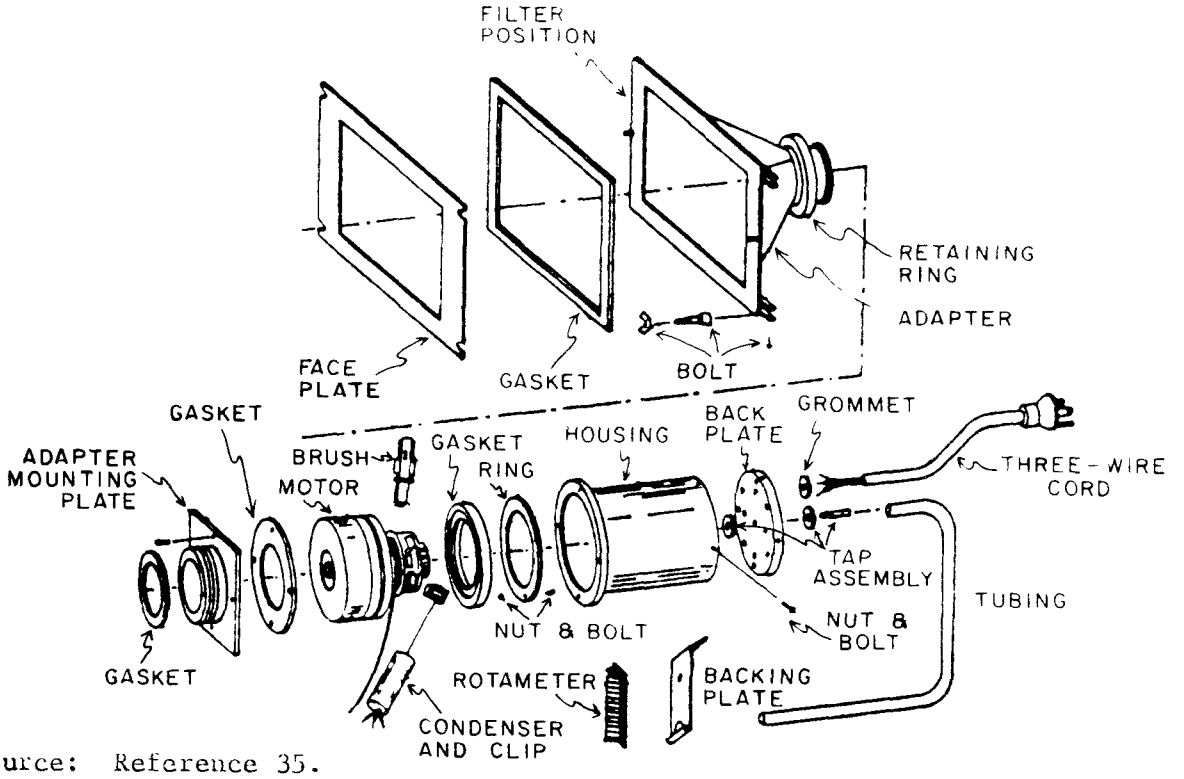

Source: Reference 35.

Figure 19. Exploded view of typical high-volume air sampler parts.

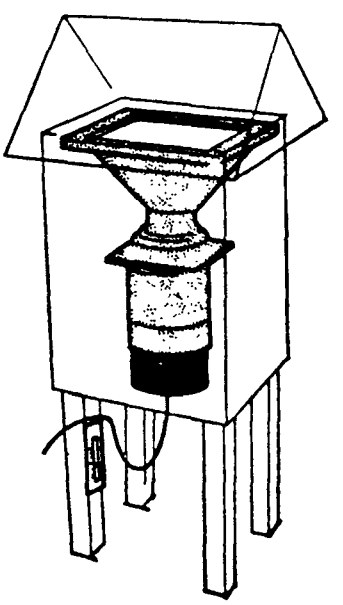

Source: Reference 35.

Figure 20. Assembled sampler and shelter.

Procedure for Use

1. Calibration

Refer to 40 CFR 50, Appendix B, Part 8.0--Calibration as amended[35] and the EPA Proposed Changes to Ambient Measurement Methodology for Carbon Monoxide, Particulates, Sulfur Dioxide, 47 FR 2341, January 15, 1982.[37]

Essentially, samplers must be calibrated when first purchased, after major maintenance on the sampler (e.g., replacement of motor or brushes), any time the flow measuring device (rotameter or recorder) has been replaced or repaired, or any time a one-point calibration check deviates from the calibration curve by more than ±6 percent

The following procedure is based on the use of a certified variable resistance orifice as the sampler calibration device and a continuous flow-rate recorder (Dickson recorder) used to ensure the accuracy of air volume measurements. Samplers may also be equipped with an electronic flow controlling mechanism to perform the same function. Flow-rate controllers and recorders are not as yet required; however, errors resulting from nonconstant flow rates can be greatly reduced by using such devices. In addition, the currently approved flow indicators (rotameters) have been shown to be subject to a variety of errors caused by physical damage, dirt deposition, and flow restrictions in connecting tubing.

a. Remove filter retaining plate from the sampler to be calibrated and place a clean filter in the filter holder.

b. Attach the variable resistance orifice (VRO) to the sampler and position the orifice setting to full open. Secure the VRO fall plate to insure an air tight seal with the orifice gasket. Attach a slack tube manometer to the sampler unit.

c. Plug sampler into 120-volt source, while checking manometer to insure that the orifice pressure drop does not exceed the range of the manometer. Let the sampler run for about 5 minutes.

d. Turn motor off and place a fresh chart on the unit. The chart should include the following information: high-volume sampler identification, date and time of calibration,and operator's name. The chart should be labeled "Calibration Data."

e. Check the recorder for proper operation, and zero the pen if necessary.

f. Determine five approximately equally spaced intermediate points which provide pressure drops between the desired maximum and minimum operating point and record the following data on the calibration sheet:

1. pressure drop from the manometer (in. H_2O)

2. flow rate indicated on Dickson recorder.

Repeat three points centralized in the vicinity of the normal sampler flow rate to insure accuracy in the field.

(The Dickson Recorder should be tapped gently prior to reading, to insure that the recorder pen is in its final position.)

g. Record the airflow rate from the VRO high-volume calibration curve for each flow recorder reading.

$$\underline{\text{ACCEPTABILITY}} = 100\left|\frac{(Qo-Qc)}{Qc}\right| \text{ within } 5\%$$

where: Qo=observed flow rate
Qc=flow rate from calibrated curve

h. If the air flow rate exceeds the acceptable limits, rerun points for which percent deviation exceeds 5 percent until acceptance limits are attained.

i. Correct the sample flow rate to standard conditions using the following formula:

$$Q_2 = Q_1\left[\frac{T_2\ P_1}{T_1\ P_2}\right]$$

where: Q_2 = corrected flow rate (scfm)
Q_1 = flow rate from chart
T_2 = absolute temperature (298°K) most sensitive ranges first.

2. Sample Collection

Total suspended particulate measurements are normally collected over a 24-hour sampling period; however, this requirement may be altered for hazardous waste sampling applications. Monitoring objectives may require sampling at specific time intervals only (e.g., during drum excavations), and high particulate loadings due to heavy equipment traffic may also require shortened sampling periods. Sampling time selection will therefore be site specific and obviously dependent upon a number of unique factors.

a. Installation of Clean Filter

(1) Remove faceplate by loosening the four wing nuts and rotating the bolts outward.

(2) Obtain a clean, weighed filter and record the filter number, high-volume sampler serial number, flowmeter serial number, location, run date, and start time on the data sheet.

(3) Carefully place the clean filter rough side up, on the wire screen, and center the filter so that when the faceplate is in position, the gasket will form a tight seal on the outside edge of the filter.

(4) Replace faceplate, being careful not to move the filter, and tighten the wing nuts evenly until the gasket forms an airtight seal against the filter.

b. Operation Checks

(1) Allow sampler motor to warm up at least 5 minutes to reach normal operating temperature.

(2) Assure that the flow recorder is connected to the sampler using the same tubing as was used to calibrate the sampler.

(3) Place a new chart on the recorder and set at correct start time.

(4) Record "Run Start" time and date, site identification, and sampler number on the chart.

(5) Turn sampler off and set clock switch to desired setting. Total suspended particulate samples are normally collected over a 24-hour period; however, this requirement may be altered depending on monitoring applications.

c. Removing Exposed Filter

(1) Turn sampler "on" and allow to warm up at least 5 minutes.

(2) Check flow recorder chart for proper operation.

(3) Turn sampler "off" and record elapsed time in logbook and on the data sheet.

(4) Remove chart and place in envelope.

(5) Carefully loosen wing nuts and remove faceplate gasket.

(6) Remove the exposed filter by gently grasping the ends of the filter and lifting it from the screen. Fold the filter lengthwise at the middle with the exposed side "in." If the collected sample is not centered on the filter, fold the filter accordingly so that sample touches sample only.

(7) Place the filter in a glassine envelope, and place glassine envelope with data sheet in a folder for return to sample bank.

(8) Visually inspect for signs of leakage, damage, etc., to the sampler and repair if necessary.

Sources

United States Environmental Protection Agency. "Appendix B--Reference Method for the Determination of Suspended Particulates in the Atmosphere (High Volume Method)". 40 CFR Part 50. November 25, 1971.

United States Environmental Protection Agency. "Proposed Changes to Ambient Measurement Methodology for Carbon Monoxide, Particulates and Sulfur Dioxide." 47 CFR 2341. January 15, 1982.

SOIL GASES AND VAPORS

Monitoring of soil gases can often serve as a quick method of determining the extent of pollutant migration or establishing perimeters of a site containing buried wastes. Soil-gas exchange with the ambient atmosphere greatly dilutes gaseous components making them difficult to detect. Therefore, sampling in the soil can provide a more concentrated source for underground waste detection. Soil-gas sampling also has particular applicability to the identification of methane fluxes at sanitary landfills.

METHOD IV-9: MONITORING GAS AND VAPORS FROM TEST HOLE

Discussion

Gas samples can be withdrawn from test holes by using a nonsparking probe, brass and Teflon being the most suitable. The probe is then attached to the gas inlet of the desired gas monitor such as those described in the ambient gases section and Method IV-1 through IV-7. The test holes are easily prepared by driving a metal rod (approximately 1 in. diameter) into the soil with a drive weight. Commercial bar hole-makers are available that combine the steel hole-making bar and drive weight into one unit (see Figure 21).[38]

Uses

This system is particularly adapted for rapid evaluation of waste sites for soil gas generation. When used in conjunction with a hydrocarbon analyzer or an explosimeter it can rapidly determine the areal extent of a waste site or the location of a particular emission source. It is recommended that the test area be screened with a metal detector before sampling.

Procedures for Use

1. Select location free from rocks and debris. Screen location with metal detector to varify absence of drums and pipes.

2. Place bar point on ground and raise drive weight, then allow weight to fall on bar. It is only necessary to guide the weight in its vertical travel.

3. Continue until desired depth or any penetration resistance is reached.

4. Remove bar hole-maker.

5. Attach suitable length of Teflon tubing (stainless steel or brass may be used in some instances but may result in some gas adsorption/absorption) to monitor instrument gas inlet.

6. Lower tubing into test hole and operate monitor or gas sampling device as listed in Methods IV-1 through IV-7.

7. Record results.

8. Remove sample tubing and observe that instrument readings return to background. If not, change tubing before proceeding to next test location.

9. Tramp over and recover test hole.

Sources

Flower, F.B. "Case History of Landfill Gas Movement Through Soils." Rutgers University, New Brunswick, New Jersey.

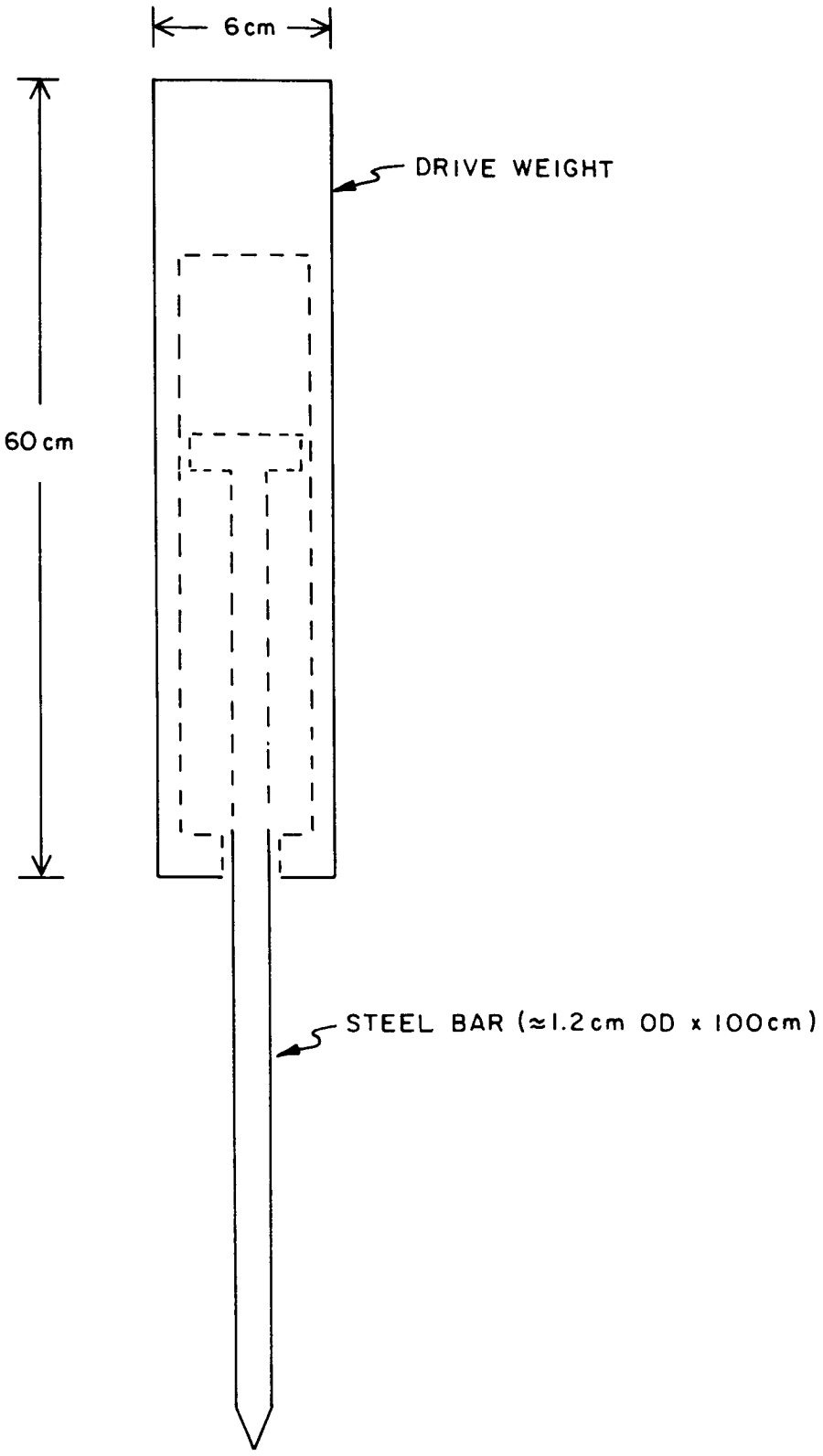

Figure 21. Bar hole-maker.

METHOD IV-10. MONITORING GAS AND VAPORS FROM WELLS

Discussion

The sampling of wells for gases and vapors can be accomplished by lowering an intake probe through a sealed cap on the top of the well, (Figure 22). The intake probe should be of a nonsparking material that will further minimize adsorption or desorption effects. Teflon or glass are preferable to steel or brass in this application. The intake probe is then connected to the desired gas monitor such as those described in the ambient gases section and Methods IV-1 through IV-7.

Uses

Existing groundwater monitoring wells can be used to check for the presence of those gases volatilized or otherwise liberated from the groundwater. In some cases, the groundwater level will be below the top of the screened portion of the well allowing free soil gases to enter the well casing.

Wells especially designed for soil-gas monitoring can also be placed by conventional well placement techniques. The well casing, however, is perforated the entire distance the annular space is packed with gravel, and the top is sealed with a grout cap.[39] The top of the casing can even be equipped with a sampling valve to allow easy coupling to the monitoring instruments.

Procedures for Use

1. Sound the well for water level or bottom.

2. Select the required length of Teflon tubing. It should be of sufficient length to approach the water level or well bottom, but not so long as to allow water or bottom sediments to enter probe inlet. An inside diameter of 1/8 inch is usually sufficient. However, because this size lacks rigidity, a small weight can be secured to the inlet end to facilitate lowering.

3. Lower the tubing through an appropriate sized stopper on the top of the well casing. A wooden plug serves well. It is not critical to maintain an effective seal around the tubing.

4. Lower intake to near bottom and attach outlet to monitor inlet.

5. Proceed with instrument operation according to methods III-1 through III-7 or the instrument operator's manual. Note: When using an adsorption technique for qualification/quantification Sisk[4] recommends a sample rate of 1pm for 5 to 30 minutes through Tenax GC (see Method IV-6).

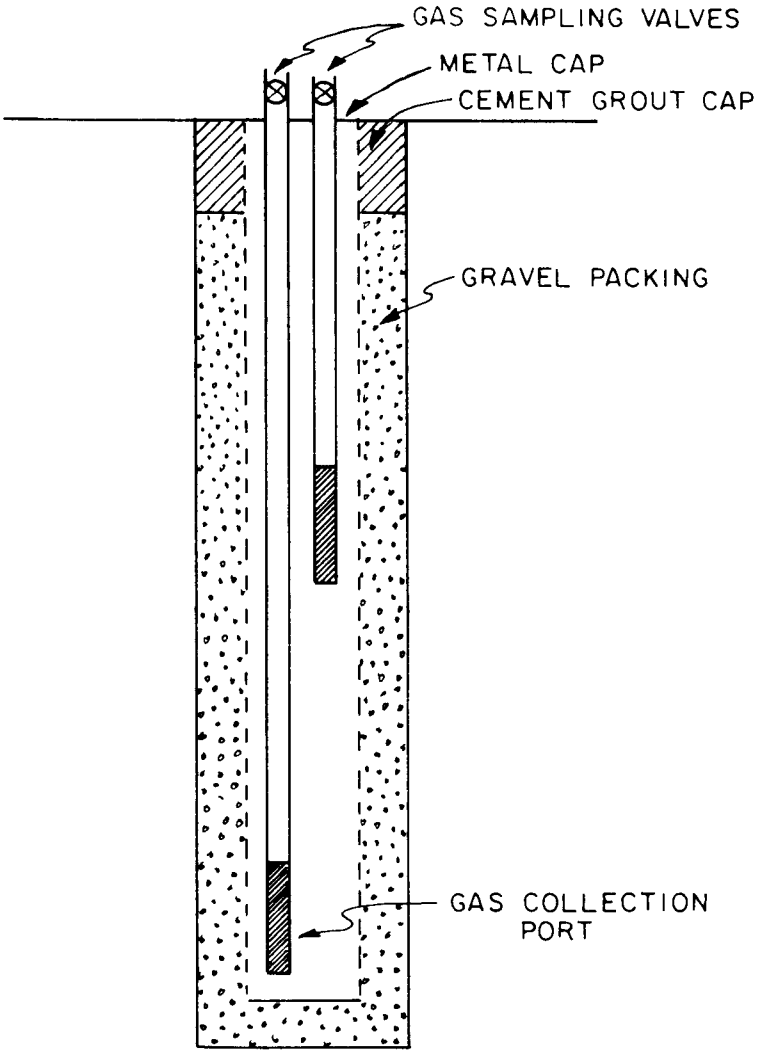

Source: Reference 39.

Figure 22. Gas sampling well.

6. Gradually raise the intake tubing while observing the instrument readings.

7. Record readings, then remove probe and close casing.

8. If instrument fails to return to background readings, replace sample inlet tube before proceeding to next well. Note: Sometimes vapors may condense on the lower portion of the sample tube, merely cutting off the bottom several centimeters of the intake tube will remove the source of contamination and allow reuse of the remaining sample tube.

Sources

Hatayama, H.R. "Special Sampling Techniques Used for Investigating Uncontrolled Hazardous Waste Sites in California." In: National Conference on Management of Uncontrolled Hazardous Waste Sites. Hazardous Material Control Research Institute, Silver Springs, Maryland. 1981.

HEADSPACE GASES

Headspace gases are the accumulated gaseous components found above solid or liquid layers in closed vessels. These gases may be the result of volatilization, degradation, or chemical reaction. Poorly ventilated or partially sealed areas can also act to concentrate gas vapors. Component concentrations normally exceed those found in ambient measurements. Therefore, the previously described ambient methods must be modified for handling these higher concentrations and for the remote sensing of container contents. The anticipated higher concentrations can be dealt with by altering the instrument detector range, reducing the sample gas flow rate into the instrument, or utilizing a sample dilution system. These techniques are necessary for the prevention of saturation, poisoning, and/or gross deterioration of the detector element.

Most ambient measurement devices have sample intakes which are highly directional and localized. The use of an extension will allow the operator to obtain samples from varying depths and distances within containers while maintaining a safe position.

Headspace gases are often found in certain types of containers. Bulging, stainless steel, lined, or other special designated drums are more likely to contain hazardous headspace gases. A preliminary scan of the external seams, edges, or any corroded areas with a vapor analyzer may indicate the nature of the contents.

Poorly ventilated vessels can usually be sampled for headspace gases through small hatches or openings. Fully sealed vessels must be approached more cautiously since breaching may result in the uncontrolled release of pressurized gases or the potential for violent reactions with the ambient atmosphere. Any decision to open a sealed vessel should be based on sound need and the investigator must be cognizant of the inherent dangers.

METHOD IV-11: SAMPLING OF HEADSPACE GASES IN SEMISEALED VESSELS

Discussion

Sampling of headspace gases involves merely extending the intake or otherwise conducting the contained gas to the detection device. Any of the procedures discussed in the ambient section (Methods IV-1 through IV-7) can be employed. The use of Teflon tubing of approximately 4.8 or 6.4 mm (3/16 or 1/4 inch) inside diameter works well as a probe extension.

Uses

This system is viable in a wide variety of applications. It is simple, and only requires some adaption to match the extension tubing to the instrument intake. The likelihood of high concentrations of contaminants is, however, greater in contained vessels and, as a result, there is the potential for detector saturation and fouling. It is advisable to place any instruments used in this role in their highest operating range. Flame ionization detectors that utilize the sample gas stream as their combustion air may have insufficient oxygen for combustion and will require use of a dilution probe. The introduction of entrained droplets from the container contents should also be avoided. Careful handling of the extension tube to avoid close contact with the materials surface and in some instances the use of a glass wool filter plug will prevent material buildup in the probe and detector.

Procedures for Use

1. Select an appropriate monitoring instrument or device that will characterize the gas if present. A combustible gas detector, hydrocarbon vapor analyzer or stain detector tube is normally used. Be particularly aware of the limitations of the instrument in use.

2. Attach the proper size and length tubing that will reach into the container. The tubing seal with the monitoring instrument should be leak tight.

3. Insert tubing into container or vessel opening and operate instrument as per Methods IV-1 through IV-7 and the appropriate operators manual.

METHOD IV-12: SAMPLING OF HEADSPACE GASES IN SEALED VESSELS

Discussion

Sealed vessels, especially 55-gallon drums, present problems when sampling for entrapped gases. The container must be opened to accept a sample probe while still preventing uncontrolled release of its potentially hazardous contents. Further, this must be accomplished while still protecting the safety of the inspector.

On large vessels and tanks inspection valves and petcocks are normally available. Sealed drums, however, are not designed to contain gases that often develop as reaction products of the contents and have no such provisions.

Leak-free sample tops can be installed on these drums by attaching a mechanism that will drill through a leak-tight fitting strapped to the drum (Figure 23). The system consists of a battery operated drill with a remote control switch. The drill is mounted on a simple spring-controlled frame which guides the drill bit through a Swagelok cross fitting. The Swagelok cross is attached to a ball valve which, in turn, is attached to a mounting plate. The mounting plate underside is gasketed with closed cell Neoprene foam. The mounting plate is held against the container using standard steel packaging straps. The cross fitting contains a Teflon seal which allows the drill bit to rotate without allowing gases from the container to escape during drum penetration. A pressure gauge is attached to one side of the Swagelok cross while a needle valve is attached to the side opposite the gauge. The pressure gauge permits the waste handler to observe the internal pressure of the container while the valve permits the removal of sample gas for analysis. The valve and pressure gauge can also be used to insure pressure equalization prior to further opening of the container. A light is located on the remote control switch which indicates when the drum has been pierced. The electrical control system is interlocked so that drill operation automatically stops upon penetration of the container by the drill bit. The whole assembly is activated remotely. Once the bit has penetrated the drum, contained gases flow between the drill bit and the inside of the fittings. Release of the gases is controlled by a needle valve. After sampling, the drill mechanism is pulled away from the container until the drill bit clears the ball valve. The ball valve is then closed, and the piercing mechanism up to the ball valve is removed from the container. The ball valve and mounting plate are left intact to serve as a permanent seal for the opening.

The monitors and detectors described in the Ambient Section (Methods IV-1 through IV-7) can then be adapted to the needle valve and the gas directed to the instrument.

Uses

This device has been used on 55-gallon drums but would also be applicable to other size drums and vessels. Fabrication specifications for this device are found in Appendix B.

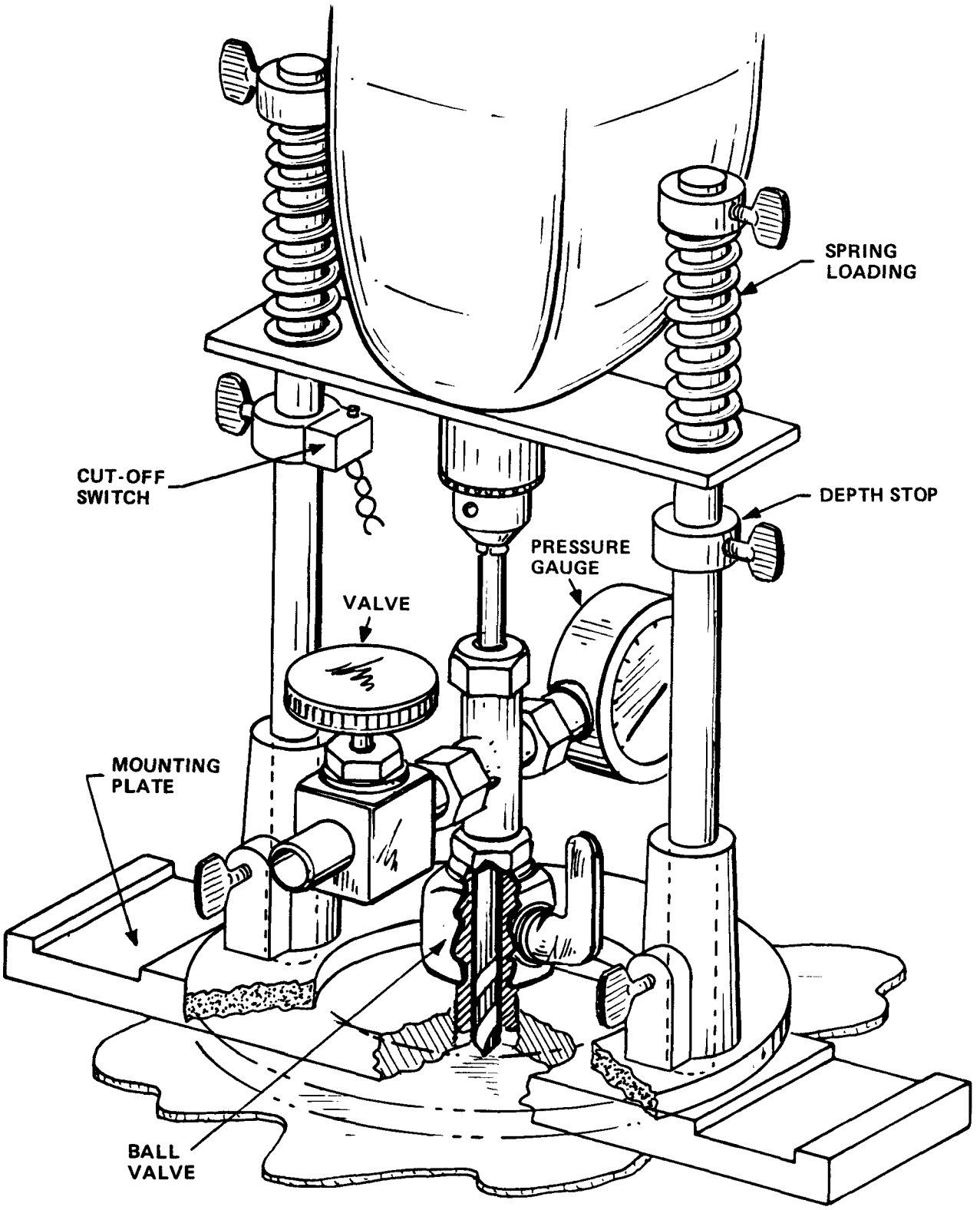

Source: Reference 40.

Figure 23. Drilling mechanism.

Procedures for Use

1. Assemble the drill assembly as per Appendix B - Equipment Availability and Fabrication.

2. Brush clear any loose rust or dirt to assure a leak-free seal. Seat assembly against the drum side. Tighten mounting straps using portable packaging equipment.

3. Assure that all fittings are snug and needle valve is fully closed.

4. Deploy remote control cable to full extent and stand behind safety screen.

5. Activate drill.

6. After penetration is indicated by light on remote control unit, approach container while monitoring internal drum pressure with pressure gauge on sampler.

7. Attach desired monitor instrument for container content characterization. Any device listed in the ambient section can be employed (Method IV-1 through IV-7). The instrument can be attached by using an appropriate size teflon tubing (see Method IV-11). After sampling, close needle valve.

8. After proper quantification and/or identification of the contained gas, the safety officer should decide whether the gas can be vented or should be properly contained for later disposal.

9. The full assembly can be removed if the gas has been properly vented or disposed of; otherwise the drill can be loosened from the bit and removed from the guide assembly as outlined below.

   a. Pull drilling mechanism away from container until the drill bit clears the ball valve. Close ball valve.

   b. Loosen nut containing Teflon seal.

   c. Unscrew bolts, holding drill assembly to mounting plate.

   d. Remove drill assembly from mounting plate pulling drill bit through Teflon seal.

   e. Remove cross fitting as unit from ball valve.

   The remaining mounting plate and ball valve serve as a permanent seal until the container can be disposed of properly.

Sources

Snyder, Roger., Tonkin, Martha E., McKissick, Alton M., "Development of Hazardous/Toxic Wastes Analytical Screening Procedures," Atlantic Research Corporation, July 1980.

SECTION 5

IONIZING RADIATION

GENERAL

Radiation monitoring should be one of the first tasks performed when initially approaching a waste site or hazardous material spill. This requirement is dictated by the potential risk to human health on contact with a radioactive source as exposure to even small amounts of energy may result in marked biological damage.

Radiation monitoring for hazardous waste situations essentially involves two approaches; personnel monitoring and survey monitoring. Personnel monitoring involves the use of instruments designed to measure total cumulative radiation exposure in units that can be related to the absorbed dose. The instruments used are worn or carried directly by the personnel being monitored and consist of such devices as film badges, pocket dosimeters and pocket chambers. Survey instruments are meant to measure ionizing activity as it relates to the exposure rate (in units of milliroentgens/hr) or disintegration rate (counts/minute). As do personnel monitors, these devices rely on the ability of radiation to cause ionizations and consist of ionization chambers, proportional counters, Geiger-Mueller instruments, and scintillation devices. They are particularly useful in performing initial field surveys to detect and locate the presence of radioactive sources and in drum screening procedures performed prior to further drum handling (i.e., staging, sampling, compositing, etc.).

Although all of these detection instruments rely on the ability of radiation to cause ionization, each differs in its sensitivity, i.e., its ability to detect different types and varying intensities of radiation. Basically there are four main groups of ionizing radiation types. These include:

- heavy, positively charged particles such as alpha particles, protons, deuterons, tritions, and possibly mesons each of which exhibit similar mechanisms of interaction with matter;
- beta particles including both positrons and electrons;
- electromagnetic radiation including x-ray and gamma radiation; and
- neutrons.

For the purposes of this section, however, only alpha, beta and gamma radiation will be discussed, as they are the types most likely to be encountered at a hazardous waste site.

Alpha particles are characterized as a charged particle having two protons and two neutrons and, due to this large mass and charge (in addition to high velocity), have a high probability of interacting or colliding with orbital electrons and atomic nuclei. They have a limited tissue penetration ability, however, since this type of radiation tends to lose its energy over short distances. It is therefore easy to shield against and poses little threat outside of the human body. However, due to its high specific ionization, alpha radiation is capable of totally destroying cellular material if it is able to locate within the body (e.g., by ingestion, inhalation, etc.).

Beta particles are negatively charged particles that can be construed as high-speed electrons. In contrast with electrons, however, beta particles orginate in the nucleus. They exhibit medium penetration and specific ionization when compared to alpha particles, and, although they pose a greater external body threat than alpha, particles of low energy are usually stopped by the horny dead layers of the skin. Particles with enough energy to penetrate the basal layer of the epidermis, however, still pose an external threat. They can be shielded by a few millimeters of aluminum and, like alpha particles, generally present a greater threat if located inside the body.

Gamma radiation is a type of electromagnetic radiation of nuclear origin with a zero rest mass and no charge. It has the lowest specific ionization of the three classifications and possesses the ability to penetrate tissue for great distances. It therefore constitutes the greatest external radiation hazard (in comparison to alpha and beta) as it is capable of deep penetration within the body and is a threat to all organs. For this reason gamma radiation is the most routinely monitored radiation type at hazardous waste sites and environmental spills.

PERSONNEL MONITORS

Although no specific method is outlined in this manual for personnel radiation monitors (this is best covered by individual manufacturer instructions), it is important that their existence and basic characteristics be mentioned in this section. For this reason, the three basic types of personnel monitors, namely film badges, thermoluminescent dosimeters, and ion chambers, will be discussed as to the specific characteristics and relative advantages of each.

Film Badge

The use of films for monitoring personnel exposure is considered to be the most practical, although least accurate, of the existing methods. The method employs a gelatin base with a silver halide spread on film or glass. Radiation interacts within the silver halide in the emulsion by means of ionizations, thereby causing the formation of a latent image which, upon development, is converted into a black deposit of metallic silver. This

darkening can then be related to the type, energy, and quantity of radiation received by the film badge. It is capable of recording a permanent record of personnel exposure.

Thermoluminescent Dosimeters

Thermoluminescent dosimeters (TLD) can replace film badges for most applications. In general they are more sensitive and more accurate than film badges and can be processed more quickly and less expensively. These devices detect radiation by storing ionization energy in defects of the crystal latice of certain doped solids, such as LiF (Mn) and Ca F_2 (Mn). The altered energy levels are read out by heating the solid which then releases visible light. The light output is proportional to the absorbed radiation energy and can be related to exposure or dose units. TLD's can be reused but do not provide a permanent record of exposure because the information is erased upon readout. A permanent record is kept in the form of the original glow curve (light output vs. time (or temperature)) trace which can be stored on paper or in electronic memory.

Self-Reading Dosimeter

A self-reading dosimeter is essentially an ion chamber containing two electrodes, one being a thin quartz loop free to move with respect to its mounting and the other a fixed heavy quartz fiber. Like charges are placed on both loops causing the movable one to be repelled from the fixed loop. Ionization entering the chamber reduces the charge on the loops allowing the movable one to return towards its neutral position, the distance being proportional to the dose received in the chamber. The device also includes an optical system and transparent scale which permits instant results at any time without external readers. They are rugged, sensitive instruments small enough to be worn comfortably and extremely useful for measuring integrated exposure levels.

Pocket Chambers

A pocket ion chamber is basically a cylindrical electrode and a coaxial collecting rod which is insulated from the rest of the device. A charge is placed on the collecting rod, and this charge is subsequently reduced when ions formed upon exposure to radiation collect on the rod. The main disadvantage of the pocket chamber is that the collecting-rod charging procedure and the determination of exposure must be accomplished externally on a unit called a "charger-reader." The main advantages of pocket chambers, in comparison to the direct-reading dosimeter, are the low cost and simplicity.

SURVEY INSTRUMENTS

Radiation survey instruments must meet the same criteria as previously outlined for other monitors used at hazardous waste sites. They should be portable, rugged, sensitive, simple in design and operation, reliable, and intrinsically safe for use in explosive atmospheres. No one survey instrument

or type of instrument can be expected to totally meet all of these criteria and the investigator must be aware of the characteristics (and limitations) of each type of detector.

Of primary concern is instrument sensitivity as there are a number of field instrument types that are unique to the type and level of radiation they will respond to. This discussion will be limited to ionization chambers, proportional counters, Geiger-Mueller counters, and scintillation detectors.

Ionization Chambers

Ionization chambers are instruments in which the ionization initially produced within the chamber by radiation is measured without further gas amplification. It consists of a gas-filled envelope (usually air at atmospheric pressure) with two electrodes at different electrical potentials. The walls of the tube generally serve as the cathode and a wire mounted down the center of the tube serves as the anode. Ionizing radiation entering the chamber produces ions which migrate towards the electrode due to the applied potential, producing a current. This current requires amplification to a measurable level before it can be recorded on a meter. These are high-range instruments (low sensitivity) and are used extensively for measuring high intensity beta, gamma, or x-radiation. No aural indication is possible with these instruments and operators must be constantly aware of the meter to determine radiation intensity. Ionization chambers do not record individual radiation particles but integrate all signals produced as an electric current to drive the meter. They should be calibrated to the type and intensity of radiation desired to be measured and are capable of reading in milliroentgens/hr (or roentgens/hr) or counts/minute.

Proportional Counter

Instruments of this type derive their name due to their operation in the proportional region of the typical instrument response curve. Instrument probes have an extremely thin window that allows alpha particles to enter and as such are used extensively for this purpose by adjusting instrument operating parameters to discriminate against beta and gamma radiation. The meter is read in counts per minute and usually has several sensitivity scales. It should be noted that due to the nature of alpha particles, it is important to hold the probe as close as possible to (though not in contact with) the surface being monitored. The proportional counter is generally more delicate in construction than the other listed devices and therefore may not be considered appropriate as a field instrument.

Geiger-Mueller Counter

These instruments operate principally in the same manner as ionization chambers except that secondary electrons are formed allowing for greater sensitivity. The chambers are filled with an inert gas such as argon, helium, or neon (below atmospheric pressure) and a quenching gas which functions to control the secondary electron formation. These instruments are very sensitive and are commonly used to detect low level gamma and/or beta radiation. Meters are read in counts/minute or milliroentgens/hour. The

amplification process inherent in this type of detector allows a single beta particle or gamma photon to be detected. It should be noted that these devices are sensitive instruments and care should be taken not to exceed their maximum capacity to prevent damage to the GM tube.

Scintillation Detectors

These devices depend upon light produced when ionizing radiation interacts with a media (solid crystal used in survey instruments). The produced flashes of light or scintillations fall onto a photomultiplier tube which converts them to electrical impulses. These impulses are amplified and subsequently measured to give an indication of the level of radiation present. These are extremely sensitive instruments used to detect alpha, beta, or gamma radiation simply by choosing the correct crystal. Alpha particles are detected with a silver activated zinc sulfide screen, beta radiation with an anthracene crystal (covered with a thin metal foil to screen alpha particles), and gamma or x-ray with a sodium iodide crystal. The instrument can be calibrated in the same manner as in ion chambers and Geiger-Mueller instruments. The operator should keep in mind that in older models the photomultiplier tube may be damaged if directly exposed to light without first disconnecting the voltage.

METHOD V-1: RADIATION SURVEY INSTRUMENTS

Discussion

As previously noted, a variety of radiation survey instrumentation exists, each capable of responding to different types and levels of ionizing radiation. The procedure delineated below is therefore purposely general and simply outlines common instrument features and operational steps. It is by no means meant to replace the instrument instruction manual but is only meant to serve as a supplemental guide.

Uses

Radiation survey instruments are used to detect the presence of radioactive sources and are useful in assisting personnel in the making of decisions concerning personal safety requirements, levels of contamination present, and transportation and disposal considerations.

Procedures for Use

1. Choose an instrument or interchangeable detector tube which is consistent with the investigative requirements.

2. Turn selector switch to the standby or the warm-up position and allow instrument to warm-up for 1-2 minutes.

3. Turn instrument selector switch to battery check position and check battery strength.

4. Turn range selector switch to desired level or scale factor (e.g., 100X, 10X, 1X, 0.1X for counts/minute scale) and check or calibrate instrument with a radioactive check source (if available).

5. Turn audio switch on if desired.

6. Choose needle response (fast/slow response).

7. Turn range selector to most sensitive setting and determine natural background radiation (0.01-0.02 mR/hr).

8. Choose a survey range and scan suspected surfaces or areas. When in doubt, use most sensitive ranges first. Read scale in mR/hr or counts/minute.

Sources

Department of Health and Human Services, Bureau of Radiological Health, Radiological Health Handbook, USGPO (017-011-0004309).

U.S. Environmental Protection Agency. "Hazardous Materials Incident Response Operations Training Manual." National Training and Operational Technology Center, Cincinnati, Ohio.

SECTION 6

REFERENCES

1. Kateman, G. and F. W. Pijpers. Quality Control in Analytical Chemistry. John Wiley and Sons, New York, 1981.

2. Smith, R. and G. James. The Sampling of Bulk Materials. Analytical Sciences Monographs, Volume 8. The Royal Society of Chemistry, London, 1981.

3. Plumb, R. H. Procedures for Handling and Chemical Analysis of Sediment and Water Samples. U.S. Environmental Protection Agency, Contract No. 4805572010, May 1981.

4. Sisk, S. W. NEIC Manual for Groundwater/Subsurface Investigations at Hazardous Waste Sites. EPA-330/9-81-002. 1981.

5. Scalf, M., J. McNabb, W. Dunlap, R. Crosby, and J. Fryberger. Manual for Ground-water Sampling Procedures. R.S. Kerr Environmental Research Laboratory, Office of Research and Development, Ada, OK. 1980.

6. deVera, E. R., B. P. Simmons, R. D. Stephen, and D. L. Storm. Samplers and Sampling Procedures for Hazardous Waste Streams. EPA-600/2-80-018. January 1980.

7. Instrument Specialities Company, Instruction Manual, Model 2100 Wastewater Sampler. Lincoln, Nebraska, January 1980.

8. National Council of the Paper Industry for Air and Stream Improvement, Inc. A Guide to Groundwater Sampling. Technical Bulletin No. 362. Madison, New York. January 1982.

9. McNabb, J. F. and G. E. Mallord. Introduction to Subsurface Microbiology and Sampling Problems. Presented at the American Society for Microbiology Annual Meeting, Miami Beach, Florida. May 1980.

10. Gibb, J. P., R. M. Schuller, and R. A. Griffin. Monitoring Well Sampling and Preservation Techniques. EPA-600/9-80-010. March 1980.

11. U.S. Environmental Protection Agency. Procedures Manual for Ground Water Monitoring at Solid Waste Disposal Facilities. EPA-530/SW-611. August 1977.

12. Gibb, J. P., R. M. Schuller, and R. A. Griffin. Collection of Representative Water Quality Data From Monitoring Wells. In: Land Disposal: Municipal Solid Waste. D. W. Shults, ed. EPA-600/9-81-002A. March 1981.

13. Spittler, T. M., and A. W. Oi. Ambient Monitoring for Specific Volatile Organics Using a Sensitive Portable PID GC. In: National Conference on Management of Uncontrolled Hazardous Waste Sites. Washington, D.C. October 28-30, 1981.

14. U.S. Department of Health, Education and Welfare. NIOSH Manual of Analytical Methods, Volumes 1-7. DHEW-NIOSH Publication No. 79-141, August 1979.

15. Versino, B., M. DeGroot, F. Geiss. Air Pollution-Sampling by Adsorption Column. Chromatographia. 7:302-304.

16. Schlitt, H., H. Knoeppel, B. Versino, A. Peel, H. Schanenburg, and H. Vissers. Organics in Air: Sampling and Identification. In: Sampling and Analysis of Toxic Organics in the Atmosphere. ASTM STP 721. American Society for Testing and Materials. Philadelphia, Pennsylvania, 1980. pp. 22-35.

17. McMillan, C. R., J. Brooks, D. S. West, N. F. Hodgson, and J. D. Mulik. Development of a Portable Multiple Sorbent Ambient Air Sampler. In: National Symposium on Monitoring Hazardous Organic Pollutants in Air. Raleigh, N.C. April 28 to May 1, 1981.

18. Gallant, R. F., J. W. King, P. L. Levins, and J. F. Pucewicz. Characterization of Sorbent Resins for Use in Environmental Sampling. EPA-600/7-78-054, March 1978.

19. Pucewicz, J. F., J. C. Harris, and P. L. Levins. Further Characterization of Sorbents for Environmental Sampling. EPA-600/7-79-216. September 1979.

20. U.S. Environmental Protection Agency. Selection and Evaluation of Sorbent Resins for the Collection of Organic Compounds. EPA-600/7-78-054. March 1978.

21. GCA Corporation. Quality Assurance Plan, Love Canal Study, Appendix A, Sampling Procedures. EPA Contract 68-02-3168.

22. GCA Corporation. Quality Assurance Plan, Love Canal Study, Appendix B, Laboratory Procedures. EPA Contract 68-02-3168.

23. Pellizzari, E. D., B. H. Carpenter, J. E. Bunch, and E. Sawicki. Collection and Analysis of Trace Organic Vapor Pollutants in Ambient Atmospheres. Environmental Science and Technology 9:556, 1975.

24. Pellizzari, E. D., J. E. Bunch, R. E. Berkindey, and J. McRay. Collection and Analysis of Trace Organic Vapor Pollutants in Ambient Atmospheres: The Performance of a Tenax-GC Cartridge Sampler for Hazardous Vapors. Anal. Letters. 9:45-63, 1976.

25. Jonsson, A. and S. Berg. Determination of 1,2-Dibromoethane, 1,2-Dichloroethane and Benzene in Ambient Air Using Porous Polymer Traps and Gas Chromatographic-Mass Spectrometric Analysis with Selected Ion Monitoring. J. Chromatogr. 190:96-106, 1980.

26. Janek, J., J. Ruzickova, and J. Novak. Effect of Water Vapor in the Quantitation of Trace Components Concentrated by Frontal Gas Chromatography on Tenax-GC. J. Chromatogr. 99:689-696, 1974.

27. Russel, J. W. Analysis of Air Pollutants Using Sampling Tubes and Gas Chromatography. Environ. Sci. Technol. 9:1175, 1975.

28. Biddleman, T. F. Interlaboratory Analysis of High Molecular Weight Organochlorines in Ambient Air. Atmos. Environ. 15:619-624, 1980.

29. Lewis, R. G., A. R. Brown, and M. D. Jackson. Evaluations of Polyurethane Foam for Sampling of Pesticides, Polychlorinated Biphenyls, and Polychlorinated Naphthalenes in Ambient Air. Anal. Chem. 49:1668-1672, 1977.

30. Lewis, R. G., and K. E. McLeod. Portable Sampler for Pesticides and Semivolatile Industrial Organic Chemicals in Air. Anal. Chem. 54:310-315, 1982.

31. Billings, W. N., and T. F. Biddleman. Field Comparison of Polyurethane Foam and Tenax-GC Resin for High Volume Air Sampling of Chlorinated Hydrocarbons. Environ. Sci. and Techn. 14:679-683, 1980.

32. Stratton, C. L., S. A. Whitlock, and J. M. Allan. A Method for the Sampling and Analysis of Polychlorinated Biphenyls (PCBs) in Ambient Air. EPA-600/4-78-048, August 1978.

33. Grover, R., and L. A. Kerr. Evaluation of Polyurethane Foam as a Trapping Medium for Herbicide Vapor in Air Monitoring and Worker Inhalation Studies. J. Environ. Sci. Health. B16: 59-66, 1981.

34. Lindgren, J. L., H. J. Krauss, and M. A. Fox. A Comparison of Two Techniques for the Collection and Analysis of Polynuclear Aromatic Compounds in Ambient Air. J. Air Poll. Control. 30:166-168, 1980.

35. Federal Register, Appendix B. Reference Method for the Determination of Suspended Particulates in the Atmosphere (High Volume Method). 40 CFR 50, 1971.

36. Jackson, M. D., and R. G. Lewis. Polyurethane Foam and Selected Sorbents as Collection Media for Airborne Pesticides and Polychlorinates Biphenyls. In: Sampling and Analysis of Toxic Organics in the Atmosphere. ASTM STP 721. pp. 36-47, 1980.

37. Federal Register. EPA Proposed Changes to Ambient Measurement Methodology for Carbon Monoxide, Particulates, Sulfur Dioxide. 47 FR 2341, January 15, 1982.

38. Flower, F. B. Case History of Landfill Gas Movement through Soils. In: The Proceedings of the Research Symposium "Gas and Leachate from Landfills" at Cook College, Rutgers University, New Jersey, March 25 and 26, 1975. U.S. EPA 600/9-76-004. 1976. pp. 177-189.

39. Hatayama, J. R. Special Sampling Techniques Used for Investigating Uncontrolled Hazardous Waste Sites in California. In: National Conference on Management of Uncontrolled Hazardous Waste Sites. Hazardous Materials Control Research Institute. Silver Springs, Maryland. 1981.

40. Synder, R. E., M. E. Tonkin, A. M. McKissick, and M. Alton. Development of Hazardous/Toxic Wastes Analytical Screening Procedures - Part I. Atlantic Research Corporation, ADA-095-506. 1980.

SECTION 7

BIBLIOGRAPHY

American Public Health Association. Standard Methods for the Examination of Water and Wastewater, Fifteenth Edition. Washington, D.C., 1980.

American Society for Testing and Materials. Penetration Test and Split-Barrel Sampling of Soils. In: Annual Book of ASTM Standards - Part 19. D1586-67. Philadelphia, PA, 1981.

American Society for Testing and Materials. Recommended Practices for Sampling. In: Annual Book of ASTM Standards - Part 26. D1605-60. Philadelphia, PA, 1981.

American Society for Testing and Materials. Soil Investigation and Sampling by Auger Borings. In: Annual Book of ASTM Standards, Part 19. D1452-80. Philadelphia, PA, 1981.

American Society for Testing and Materials. Standard Practice for Sampling Atmospheres to Collect Organic Compounds. (Activated Charcoal Adsorption Method.) In: Annual Book of ASTM Standard - Part 26. D3686-78. Philadelphia, PA, 1981.

American Society for Testing and Materials. Standard Properties for Sampling Water. In: Annual Book of ASTM Standards - Part 31. D3370-76. Philadelphia, PA, 1981.

American Society for Testing and Materials. Thin Walled Tube Sampling of Soils. In: Annual Book of ASTM Standards - Part 19. D-1587-74. Philadelphia, PA, 1981.

Apperson, C. S., R. B. Leidy, R. Epler and E. Corter. An Efficient Device for Collecting Soil Samples for Pesticide Residue Analysis. Bull. Environ. Contam. Toxicol., 25:55-58, 1980.

Arthur D. Little, Inc. 1979. EPA/IERL-RTP Procedures for Level 2 Sampling and Analysis of Organic Materials. EPA-600/7-79-033, U.S. Dept. of Commerce, 1979.

Barborick, K. A., B. R. Sabey and A. Klute. Comparison of Various Methods of Sampling Soil Water for Determining Ionic Salts, Sodium and Calcium Content in Soil Columns. Amer. Journal of Soil Science, 43(5), 1979.

Batley, G. E., D. Gardner. Sampling and Storage of Natural Waters for Trace Metals Analysis. Research, 11:745-756, 1977.

Beach, M. and J. S. Beach. Sample Acquisition - The First Step in Water Quality Monitoring. Prog. Water Tech., 9(516):75-77, 1977.

Eichenberger, B., J. R. Edwards, K. Y. Clen and R. Stevens. A Case Study of Hazardous Wastes in Class 1 Landfills. EPA 600/2-78-064. U.S. Environmental Protection Agency, Washington, D.C., 1978.

Enverex, Inc. Handbook for Sampling and Sample Preservation of Water and Wastewater. EPA-600/4-76-049. U.S. Dept. of Commerce, 1976.

Everett, L. G., K. D. Schmidt, R. M. Tinlin and D. R. Todd. Monitoring Ground Water Quality: Methods and Costs. EPA-600/4-76-023, U.S. Environmental Protection Agency, Washington, D.C., 1976.

Hensley, C. P., W. J. Keffer, C. McKenzie and M. D. Lair. Continuous Monitoring Automated Analysis, and Sampling Procedures. Journal WPCE, pp. 1061-1065, 1978.

Hurst, G. S. and J. E. Turner. Elementary Radiation Physics. John Wiley and Sons, New York, 1967.

Johnson, M. G. The Stratified Sample Thief-A Device for Sampling Unknown Fluids. In: National Conference on Management of Hazardous Waste Sites, Washington, D.C., 1981.

Josephson, J. Safeguards for Groundwaters. Environmental Science and Technology, 14(1):38-44, 1980.

Lentzen, D. E., D. Wagoner, E. D. Estes, and W. F. Gutknecht. IERL-RTP Procedures Manual: Level 1 Environmental Assessment (second ed.)., EPA-600/7-78-201, 1978.

MacLeod, K. E. and R. G. Lewis. Measurement of Contamination from PCB Sources In: Sampling and Analysis of Toxic Organics in the Atmosphere, ASTM STP 721, Philadelphia, PA, 1980.

MacLeod, K. E. Polychlorinated Biphenyls in Indoor Air. Environmental Science and Technology, 7(11), 1981.

Maddalone, R. F. Technical Manual for Inorganic Sampling and Analysis. EPA-600/277-024, 1977.

Mason, Benjamin, J. Protocol for Soil Sampling: Techniques and Strategies. Contract No. CR 808529-01-2, U.S. Environmental Protection Agency, EMSL-LV, March 30, 1982.

Milletari, A. F. Sampling Industrial Wastewater to Help Meet Discharge Standards. Water and Wastes Engineering, 14(10):55-57, 1977.

Monsanto Corp. Technical Manual for Process Sampling Strategies for Organic Materials. EPA-2-76-122, IERL, 1976.

Peters, J. A., K. M. Tackett, and E. C. Eimutis. Measurement of Fugitive Hydrocarbon Emissions from a Chemical Waste Disposal Site. In: National Conference on Management of Uncontrolled Hazardous Waste Sites, Washington, D.C., 1981.

Pellezzari, E. D. Development of Method for Carcinogenic Vapor Analysis in Ambient Atmospheres. EPA 650/2-74-121, 1974.

Pettyjohn, W. A., W. J. Dunlop, R. Crosby, and W. J. Keely. Sampling Groundwater for Organic Contaminants. Groundwater. 19(2), 1981.

Pickens, J. F., J. A. Cherry, G. E. Grisak, W. R. Merrit and B. A. Risto. A Multilevel Device for Groundwater Sampling and Piezometric Monitoring. Groundwater, 15(5), 1977.

Rhodes, J. W. and D. E. Johnson. Evaluation of Collection Media for Low Levels of Airborne Pesticides. EPA 600/1-77-050, 1980.

Robertson, J. Organic Compounds Entering Ground Water from a Landfill. National Environmental Research Center. PB-237-969, 1974.

Schofield, T. Sampling Water and Wastewater. Practical Aspects of Sample Collection. Water Pollution Control, 79:468-470, 1980.

Sullivan, D. A. and J. B. Strauss. Air Monitoring of a Hazardous Waste Site. In: National Conference on Management of Uncontrolled Hazardous Waste Sites, Washington, D.C., 1981.

Williams, R. B. A Sample Substrate Core Sampler. Lab. Pract., 29(6):637, 1980.

APPENDIX A

SAMPLE CONTAINERIZATION AND PRESERVATION

Acidity and Alkalinity

Apparatus and Materials:

- Polyethylene or borosilicate glass (Pyrex or equivalent) bottles.

Sample Collection, Preservation, and Handling:

- Fill sample bottles completely and cap tightly.
- Store samples at 4°C.
- All samples should be analyzed within 14 days of collection.

Quality Control:

- Dissolved gases contributing to acidity or alkalinity, such as carbon dioxide, hydrogen sulfide, or ammonia, may be lost or gained during sampling or storage. Sample bottles must be capped and sealed tightly, avoiding sample agitation or prolonged exposure to air.

Asbestos

Apparatus and Materials:

- 1-liter Polyethylene bottles

Sample Collection, Preservation and Handling:

- Leave air space at the top of the sample container to allow for shaking the sample.
- Avoid contacting the sample with acid
- If the sample cannot be filtered within 48 hours of collection, add 1 ml of a 2.71 percent solution of mercuric chloride per liter of sample to prevent bacterial growth.
- Store at 4°C

Quality Control:

- The sample bottle should be rinsed at least twice with the water that is being sampled.

Bacteria

Apparatus and Materials:

- Polypropylene or glass bottles. Samples for bacteriological examination must be collected in bottles that have been cleansed and rinsed with great care, given a final rinse with distilled water, and sterilized.

  Bottles of glass capable of being sterilized and of any suitable size and shape may be used for samples intended for bacteriologic examination. Bottles shall hold a sufficient volume of sample for all the required tests, permit proper washing, and maintain the samples uncontaminated until the examinations are completed. Ground glass stoppered bottles, preferably wide-mouth and of break-resistant glass, are recommended. Polypropylene bottles of suitable size, wide-mouth, and capable of being sterilized are also satisfactory.

  Metal or plastic screw cap closures may be used on sample bottles provided that no volatile compounds are produced on sterilization, and that they are equipped with liners that do not produce toxic or bacteriostatic compounds on sterilization.

  Before sterilization, cover the tops and necks of sample bottles having glass closures with metal foil, rubberized cloth, heavy impermeable paper, or milk bottle cover caps.

  Glassware shall be sterilized for not less than 60 minutes at a temperature of 170°C.

  For plastic bottles that distort on autoclaving, low temperature ethylene oxide gas sterilization should be used.

- Sodium thiosulfate (ACS), 10 percent solution. When sampling water contains residual chlorine, sodium thiosulfate should be added to the clean sample bottle before sterilization in an amount sufficient to provide an approximate concentration of 100 mg/l in the sample. This can be accomplished by adding to a 500 ml bottle, 0.4 ml of a 10 percent solution of sodium thiosulfate (this will neutralize a sample containing about 15 mg/l of residual chlorine). The bottle is then stoppered, capped, and sterilized.

- Water samples high in copper or zinc and wastewater samples high in heavy metals should be collected in sample bottles containing a chelating agent that will reduce metal toxicity. This is particularly significant when such samples are in transit for 24 hours or more. Ethylenediaminetetraacetic acid (EDTA) is a satisfactory chelating agent. A concentration of 372 mg/l should be

added separately to the sample bottle before sterilization (0.3 ml of a 15 percent solution in a 500 ml bottle) or it may be combined with the sodium thiosulfate solution before addition.

Sample Collection, Preservation, and Handling:

- When the sample is collected, leave ample air space in the bottle (at least 2.5 cm or 1 in.) to facilitate mixing of the sample by shaking, preparatory to examination. Care must be exercised to take samples that will be representative of the water being tested and to avoid contamination of the sample at the time of collection or in the period before examination.

  The sampling bottle shall be kept unopened until the moment it is to be filled. Remove the stopper and hood or cap as a unit, taking care to avoid soiling. During sampling, do not handle the stopper or cap and neck of the bottle and protect them from contamination. Hold the bottle near the base, fill it without rinsing, replace the stopper or cap immediately, and secure the hood around the neck of the bottle.

- Store samples at 4°C.

- All samples should be analyzed within 6 hours of collection.

Quality Control:

- The bacteriological examination of a water sample should be started promptly after collection to avoid unpredictable changes. The time and temperature of storage of all samples should be recorded and should be considered in the interpretation of data.

Bicarbonate/Carbonate

Apparatus and Materials:

- Polyethylene or glass bottles

Sample Collection, Preservation and Handling:

- Bicarbonate/Carbonate analysis should be performed onsite. If onsite determination is not possible, completely fill the sample bottle, leaving no headspace, and return it to the laboratory as quickly as possible for analysis.

- Store sample at 4°C until analyzed.

Quality Control:

- Carbon dioxide may be lost or gained during sampling and storage. Sample bottles must be capped and sealed tightly, avoiding sample agitation or prolonged exposure to air.

Biochemical Oxygen Demand (BOD)

Apparatus and Materials:

- Polyethylene or glass bottles.

Sample Collection, Preservation, and Handling:

- If possible, avoid samples containing residual chlorine by sampling before chlorination. Notify laboratory if sample is from a chlorinated effluent.
- Store sample at 4° until analyzed.
- All samples should be analyzed within 48 hours of collection.

Quality Control:

- Samples for BOD analysis may undergo significant degradation during storage between collection and analysis, resulting in a low BOD value. Minimize reduction of BOD by promptly analyzing the sample.

Bromide

Apparatus and Materials:

- Polyethylene or glass bottles.

Sample Collection, Preservation, and Handling:

- There are no required preservation techniques, although storage at 4°C is recommended.
- All samples must be analyzed within 28 days of collection.

Quality Control:

- No special precautions.

Carbonate

See Bicarbonate/Carbonate

Chloride

Apparatus and Materials:

- Polyethylene or glass bottles.

Sample Collection, Preservation, and Handling:

- No preservative necessary.
- All samples must be analyzed within 28 days of collection.

Quality Control:

- No special precautions.

Chlorine Demand

Apparatus and Materials:

- Polyethylene or glass bottles.
- Testing apparatus and reagents, if analysis is to be performed onsite.

Sample Collection, Preservation, and Handling:

- Chlorine in aqueous solution is unstable, and the chlorine content of samples or solutions, particularly weak solutions, will decrease rapidly. Exposure to sunlight or other strong light or agitation will accelerate the reduction of chlorine. Therefore, sample must be analyzed onsite or brought immediately to the laboratory. The maximum holding time is 2 hours.

Quality Control:

- Chlorine determinations must begin immediately after sampling. Excessive light and agitation should be avoided.

Chromium VI

Apparatus and Materials:

- Polyethylene or glass bottles.

Sample Collection, Preservation, and Handling:

- Store samples at 4°C.
- All samples must be analyzed within 24 hours of collection.
- Do not contact sample with acid

Quality Control:

- Serious errors may be introduced during sampling and storage by failure to remove residues of previous samples from the sample container; therefore, all containers and sampling equipment should be thoroughly cleaned before use.

Chemical Oxygen Demand (COD)

Apparatus and Materials:

- Polyethylene or glass bottles.
- Conc. sulfuric acid, H_2SO_4 (ACS).

Sample Collection, Preservation. and Handling:

- Preserve the sample by acidification with conc. sulfuric acid to a pH less than 2.
- Store samples at 4°C.
- All samples must be analyzed within 28 days of collection.

Quality Control:

- Unstable samples should be tested without delay.

Color

Apparatus and Materials:

- Polyethylene or glass bottles.

Sample Collection, Preservation, and Handling:

- Store samples at 4°C.
- All samples must be analyzed within 48 hours of collection.

Quality Control:

- No special precautions.

Conductance

Apparatus and Materials:

- Polyethylene or glass bottles.

Sample Collection, Preservation, and Handling:

- Store samples at 4°C.
- All samples must be analyzed within 28 days.

Quality Control:

- No special precautions.

Cyanide, Total and Amenable to Chlorination

Apparatus and Materials:

- Polyethylene or glass bottles.
- Sodium hydroxide solution (ACS).
- Ascorbic acid.

Sample Collection, Preservation, and Handling:

- Because most cyanides are highly reactive and unstable, analyze samples as soon as possible. Preserve the sample by addition of 2 ml of 10 N NaOH to raise the pH of the sample to 12 or above and store in a closed, dark bottle at 4°C.
- If residual chlorine is present in the sample, add 0.6 g ascorbic acid.
- All samples should be analyzed within 14 days of collection.

Quality Control:

- Maximum holding time is 24 hours when sulfide is present. Optionally, all samples may be tested with lead acetate paper before the pH adjustment in order to determine if sulfide is present. If sulfide is present, it can be removed by the addition of cadmium nitrate powder until a negative spot test is obtained. The sample is filtered and then NaOH is added to pH 12.

Fluoride

Apparatus and Materials:

- Polyethylene bottles.

Sample Collection, Preservation, and Handling:

- Polyethylene bottles are required for collecting and storing samples for fluoride analysis. Always rinse the bottle with a portion of the sample.
- All samples must be analyzed within 28 days of collection.

Quality Control:

- No special precautions.

Hardness

Apparatus and Materials:

- Polyethylene or glass bottles.

Sample Collection, Preservation, and Handling:

- Acidify with HNO_3 to pH < 2, store samples at 4°C.
- Samples should be analyzed within 6 months of collection.

Quality Control:

- Serious errors may be introduced during sampling and storage by failure to remove residues of previous samples from the sample container; therefore all containers and sampling equipment should be thoroughly cleaned before use.

Hydrazine

Apparatus and Materials:

- Polyethylene or glass bottles.

Sample Collection, Preservation, and Storage:

- If the sample cannot be analyzed immediately, collect it under acid. Add 90 ml of sample to 100 ml of (1 + 9) HCl.

Quality Control:

- Avoid contacting the sample with oxidizing agents which may diminish the hydrazine content.

Iodide

Apparatus and Materials:

- Polyethylene or glass containers.

Sample Collection, Preservation, and Handling:

- Store samples at 4°C, analyze within 24 hours of collection.

Quality Control:

- No special precautions.

Iodine

Apparatus and Materials:

- Polyethylene or glass containers

Sample Collection, Preservation, and Handling:

- The samples must be analyzed onsite or brought immediately to the laboratory. The maximum holding time is 2 hours.

Quality Control:

- Iodine determinations must begin immediately after sampling.

Metals - Except Chromium VI

Apparatus and Materials:

- Polyethylene or glass bottles.
- Nitric acid (1 + 1): Mix equal volumes of conc. nitric acid, HNO_3 (ACS), with deionized water.
- Deionized water.

Sample Collection, Preservation, and Handling:

- Wash and rinse sample container thoroughly with 1 + 1 nitric acid, then with deionized water before use.
- Acidify the sample with 1 + 1 nitric acid to a pH of 2.0 or less. Normally, 3 ml of 1 + 1 nitric acid per liter should be sufficient to preserve the samples. This will keep the metals in solution and minimize their adsorption on the container wall.
- All samples should be analyzed within 6 months of collection. An exception is mercury analysis, which must be completed within 28 days.

Quality Control:

- Serious errors may be introduced during sampling and storage by failure to remove residues of previous samples from the sample container; therefore, follow the described rinsing procedure for all containers and sampling equipment.

Nitrogen

Ammonia
Nitrate-Nitrite
Kjeldahl Nitrogen

Ammonia

Apparatus and Materials:

- Polyethylene or glass bottles.
- Conc. sulfuric acid, H_2SO_4 (ACS).

Sample Collection, Preservation, and Handling:

- In the event that a prompt analysis is impossible, add conc. sulfuric acid to lower sample pH to less than 2.
- All samples should be analyzed within 28 days of collection.
- Store samples at 4°C.

Quality Control:

- The most reliable results are obtained from fresh samples.

Kjeldahl Nitrogen

Apparatus and Materials:

- Polyethylene or glass bottles.
- Conc. sulfuric acid (H_2SO_4) (ACS).

Sample Collection, Preservation, and Handling:

- Acidify samples with conc. sulfuric acid to a pH of 2.0 or less.
- Store samples at 4°C.
- All samples should be analyzed within 28 days of collection.

Quality Control:

- The most reliable results are obtained in fresh samples. If prompt analysis is impossible, retard biological activity with the above preservation method.

Nitrate and Nitrite

Apparatus and Materials:

- Polyethylene or glass bottles.
- Conc. sulfuric acid, H_2SO_4 (ACS)

Sample Collection, Preservation, and Handling:

- Store samples at 4°C.
- All samples should be analyzed within 48 hours of collection.
- If nitrate or nitrate plus nitrite are to be determined, preserve the sample by addition of H_2SO_4 to a pH of 2.0 or less.
- Sulfuric acid should not be added to samples requiring analysis for nitrite only.

Quality Control:

- Nitrate and nitrite determinations should be made promptly after sampling.

Oil and Grease

Apparatus and Materials:

- Glass bottles.
- Conc. sulfuric acid (H_2SO_4) (ACS).

Sample Collection, Preservation, and Handling:

- Collect a representative sample in a wide-mouth glass bottle and acidify in the sample bottle with conc. sulfuric acid to a pH of 2.0 or less. If other parameters are to be analyzed for, collect a separate sample for the oil and grease determination to avoid subdividing the sample in the laboratory.
- Store samples at 4°C.
- All samples should be analyzed within 28 days of collection.

Quality Control:

- Great care should be exercised when collecting samples to ensure that a representative sample is obtained. When information is required about the average grease concentration of a waste over an extended period, examine at individual time intervals to eliminate losses of grease on sampling equipment during collection of a composite sample.

Organics

Purgeables - Method 624
Extractables - Method 625
Pesticides/PCBs - Method 608

Method 624 Purgeables

Apparatus and Materials:

- The water sample is to be collected in two (2) 40 ml vials with Teflon-faced silicone septa and screw caps and maintained at 4°C until the sampler's responsibility has been relieved at the Sample Bank.

- Container Preparation

  1. Wash 40 ml vials with screw caps (Pierce No. 13075 or equivalent) and Teflon-faced silicone septa (Pierce No. 12722 or equivalent) separately, utilizing a solution of Alconox detergent or equivalent, and hot tapwater.

  2. Rinse thoroughly with deionized water.

  3. Place vials, caps, and septa on precleaned aluminum foil (as described above) in an oven and bake for one (1) hour at 105°C.

  4. Allow the vials to cool with the septa properly inserted and the caps screwed on loosely. Tighten down caps when cool.

  5. Store vials in an area not subject to contamination by air or other sources.

Sample Collection, Preservation, and Handling

- If the sample contains residual chlorine, add sodium thiosulfate as a preservative (10 mg/40 ml is sufficient for up to 5 ppm Cl_2) to the empty sample bottles just prior to shipping to the sampling site.

- If aromatic compounds such as benzene, toluene and ethylbenzene are to be determined one of the following procedures should be used to minimize degradation of these compounds by microbial action.

  - Collect about 500 ml of sample in a clean container. Adjust the pH of the sample to about 2 by addition of 1+1 HCl. Cap the container and invert once to mix; check the pH with narrow range (1.4 to 2.8) pH paper. Transfer the sample to a 40 ml vial as described below. If residual chlorine is present, add sodium thiosulfate to another sample container and fill as described below.

  - Alternatively, the addition of the $HgCl_2$ to the sampling vial (approximately 12 mg per 40 ml vial) has been found effective for inhibiting microbial action.

- The following procedures apply to sampling directly with the sample vial.

    1. Collect a single undisturbed sample of water for the analysis of volatile organics. Submerge the sample vial just below the surface upside down and slowly invert. Accomplish this task creating as little disturbance as possible.

    2. Allow the vial to fill and reach equilibrium with its surrounding reservoir for several seconds.

    3. Place the cap over the mouth of the vial so that the septum is properly oriented and screw down the cap firmly.

    4. Invert the vial to discover any entrapped air bubbles. If such is the case, the sample will be discarded and another 40 ml vial selected and filled.

    5. Collect a replicate sample per instructions above.

        - Label the sample vials with the appropriate designated sample tag.

        - Place the properly labeled sample vials in an appropriate carrying container maintained at 4°C throughout the sampling and transportation period.

- Analyze samples within 14 days.

Quality Control:

- Standard quality assurance practices should be used with this method. Field replicates should be collected to validate the precision of the sampling technique.

- Samples can be contaminated by diffusion of volatile organics (particularly methylene chloride) through the septum seal into the sample during shipment and storage. A field blank* prepared from organic-free water and carried through the sampling and handling protocol can serve as a check on such contamination.

---

*Field Blank. The field blank is defined as an appropriate volume of "organic-free" water which has been sent to the sampling site and back to the analytical laboratory in a container and bottle identical to the type used to collect the samples. Field blanks and samples must be shipped in separate containers. When received in the lab, the field blank is dosed, extracted and concentrated as if it were an actual sample.

ecology and environment, inc.
223 WEST JACKSON BLVD.
CHICAGO, IL 60606 (312) 663-9415

Method 625 Extractables (Base/Neutrals, Acids, and Pesticides)

Apparatus and Materials:

- Sampling equipment, for discrete or composite sampling.

  Grab sample bottle - Amber glass, 1 liter to 1 gallon volume. French or Boston Round design is recommended. The container must be washed and solvent rinsed before use to minimize interferences.

  Bottle caps - Threaded to fit sample bottles. Caps must be lined with Teflon. Aluminum foil may be substituted if sample is not corrosive.

  Compositing equipment - Automatic or manual compositing system. Must incorporate glass sample containers for the collection of a minimum of 1000 ml. Sample containers must be kept refrigerated during sampling. No plastic or rubber tubing other than Teflon may be used in the system.

Sample Collection, Preservation, and Handling:

- Grab samples must be collected in glass containers. Conventional sampling practices should be followed, except that the bottle must not be prerinsed with sample before collection. Composite samples should be collected in refrigerated glass containers. Automatic sampling equipment must be free of Tygon and other potential sources of contamination.

- The sample must be iced or refrigerated from the time of collection until extraction.

- All samples must be extracted within 7 days and completely analyzed within 30 days of collection.

Quality Control:

- Standard quality assurance practices should be used with this method.

- Glassware must be scrupulously clean. Clean all glassware as soon as possible after use by rinsing with the last solvent used. This should be followed by detergent washing in hot water. Rinse with tap water, distilled water, acetone and finally pesticide quality hexane. Heavily contaminated glassware may require treatment in a muffle furnace at 400°C for 15 to 30 minutes. Some high boiling materials, such as PCB's, may not be eliminated by this treatment. Glassware should be sealed/stored in a clean environment immediately after drying or cooling to prevent any accumulation of dust or other contaminants. Store inverted or capped with aluminum foil.

Method 608 Organochlorine Pesticides and PCBs

Apparatus and Materials:

- Sampling equipment, for discrete or composite sampling.

  Grab sample bottle - Amber glass, 1 liter or 1 quart volume. French or Boston Round design is recommended. The container must be washed and solvent rinsed before use to minimize interferences.

  Bottle caps - Threaded to screw on to the sample bottles. Caps must be lined with Teflon. Foil may be substituted if sample is not corrosive.

  Compositing equipment - Automatic or manual compositing system. Must incorporate glass sample containers for the collection of a minimum of 250 ml. Sample containers must be kept refrigerated during sampling. No Tygon or rubber tubing may be used in the system.

Sample Collection, Preservation, and Handling:

- Grab samples must be collected in glass containers. Conventional sampling practices should be followed, except that the bottle must not be prewashed with sample before collection. Composite samples should be collected in refrigerated glass containers. Automatic sampling equipment must be free of Tygon and other potential sources of contamination.

- The samples must be iced or refrigerated from the time of collection until extraction.

- All samples must be extracted within 7 days and completely analyzed within 30 days of collection.

Quality Control:

- Standard quality assurance practices should be used with this method.

Hydrogen Ion (pH)

Apparatus and Materials:

- Polyethylene or glass bottles.

- Electronic pH meter with temperature compensation adjustment. Glass electrode: Glass electrodes are available for measurement over the entire pH range within minimum sodium ion error types for high pH-high sodium samples. Reference electrode: Use of calomel, silver-silver chlroide, or other constant-potential electrode.

- Standard buffer solutions of known pH.

Sample Collection, Preservation, and Handling:

- The electrometric measurement of pH is the only method approved by EPA. The determination should be made onsite. The maximum holding time for any sample is 2 hours.

- Because of the difference between the many makes and models of commercially available pH meters, it is impossible to provide detailed instructions for the proper operation of every instrument. In each case, follow the manufacturer's instructions. Thoroughly wet the glass and reference electrodes by immersing the tips in water overnight or in accordance with instructions. Thereafter, when the meter is not in use for pH measurement, keep the tips of the electrodes immersed in water.

  Before use, remove the electrodes from the water and rinse with distilled or demineralized water. Dry the electrodes by gently blotting with a soft tissue. Standardize the instrument with the electrodes immersed in a buffer solution with a pH approaching that of the sample and note the temperature of the buffer and the pH at the measured temperature. Remove the electrodes from the buffer, rinse thoroughly, and blot dry. Immerse in a second buffer approximately 3 pH units different from the first and note the temperature of the buffer and the pH at the measured temperature; the reading should be within 0.1 unit of the pH for the second buffer. Rinse electrodes thoroughly, blot dry, and immerse in the sample. Agitate the sample sufficiently to provide homogeneity and keep solids in suspension. If the sample temperature is different from that of the buffers, let the electrodes equilibrate with the sample. Measure the sample temperature and set the temperature compensator on the pH meter to the measured temperature. Note and record the pH and temperature. Rinse electrodes and immerse in water until the next measurement.

When only occasional pH measurements are made, standardize the instrument before each measurement. Where frequent measurements are made, less frequent standardization (every 1 or 2 hours) is satisfactory. However, if sample pH values vary widely, standardize more frequently with a buffer having a pH within 1 to 2 pH units of that sample. Measure with two or more buffers of different pH at least once daily and more frequently if samples contain abrasive solids or dissolved fluorides, in order to check the linearity of response. When electrode response to two buffers 3 pH units apart show differences greater than 0.1 pH unit, replace the glass electrode.

Measurements of pH in high purity waters, such as condensate or demineralizer effluents, are subject to atmospheric contamination and require special procedures for accurate pH measurement.

Quality Control:

- The glass electrode is relatively free from interference from color, turbidity, colloidal matter, oxidants, reductants, or high salinity, except for a sodium error at high pH. This error at a pH above 10 may be reduced by using "low sodium error" electrodes. When using ordinary glass electrodes, make approximate corrections for the sodium error in accordance with information supplied by the manufacturer. Temperature exerts two significant effects on pH measurement. The pH potential, i.e., the change in potential per pH unit, varies with temperature, and ionization in the sample also varies. The first effect can be overcome by a temperature compensation adjustment provided on the better commercial instruments. The second effect is inherent in the sample and is taken into consideration by recording both the temperature and pH of each sample.

Phenols

Apparatus and Materials:

- Glass bottles.
- Concentrated Sulfuric Acid, H_2SO_4 (ACS).

Sample Collection, Preservation, and Handling:

- Acidify sample with concentrated H_2SO_4 acid to a pH of 2.0 or less.
- Oxidizing agents, such as chlorine, should be removed immediately after sampling by the addition of an excess of ferrous ammonium sulfate.
- Store samples at 4°C.
- All samples should be analyzed within 28 days of collection.

Quality Control:

- Phenols in concentrations usually encountered in wastewaters are subject to biological and chemical oxidation. It is recommended that preserved and stored samples be analyzed as soon as possible.

Orthophosphate

Apparatus and Materials:

- Polyethylene or glass bottles.

Sample Collection, Preservation, and Handling:

- Store samples at 4°C.
- All samples must be analyzed within 48 hours of collection.

Quality Control:

- Do not store samples containing low concentrations of phosphorus in plastic bottles because phosphate may be adsorbed onto the walls of the bottles. Rinse all glass containers with hot dilute HCl, then rinse several times in distilled water. Never use commercial detergents containing phosphate for cleansing glassware used in phosphate analyses.

Phosphorus, Total

Apparatus and Materials:

- Polyethylene or glass bottles.
- Conc. sulfuric acid (H_2SO_4) (ACS).

Sample Collection, Preservation, and Handling:

- Acidify sample with conc. sulfuric acid to a pH of 2.0 or less.
- Store samples at 4°C.
- All samples must be analyzed within 28 days of collection.

Quality Control:

- Do not store samples containing low concentrations of phosphorus in plastic bottles because phosphate may be adsorbed onto the walls of the bottles. Rinse all glass containers with hot dilute HCl, then rinse several times in distilled water. Never use commercial detergents containing phosphate for cleansing glassware used in phosphate analyses.

Radioactivity

Apparatus and Materials:

- Polyethylene or glass bottles.
- Conc. nitric acid (HNO_3) (ACS).

Sample Collection, Preservation, and Handling:

- Acidify samples with conc. nitric acid to a pH of 2.0 or less.
- All samples must be analyzed within 6 months of collection.

Quality Control:

- The principles of representative sampling of water and wastewater apply to sampling for radioactivity examinations. When radioactive industrial wastes or comparable materials are sampled, consideration should be given to the deposition of radioactivity on the walls and surfaces of glassware, plastic containers, and equipment. Because a radioactive element is often present in submicrogram quantities, a significant fraction of it may be readily lost by adsorption on the surface of containers or glassware used in the examination. This may cause a loss of radioactivity and possible contamination of subsequent samples due to reuse of inadequately cleansed containers.

Silica

Apparatus and Materials:

- Polyethylene bottles.

Sample Collection, Preservation, and Handling:

- Collect samples in bottles of polyethylene plastic only; do not use glassware for any sample handling.
- Store samples at 4°C.
- All samples must be analyzed within 28 days of collection.

Quality Control:

- If samples are stored in glass, silica may leach into the sample and raise concentrations, therefore glassware cannot be used.

Solids

Apparatus and Materials:

- Polyethylene or glass bottles.

Sample Collection, Preservation, and Handling:

- Store samples at 4°C.
- Samples must be analyzed within the following times, according to the analysis to be performed:

Dissolved	7 days
Volatile Dissolved	7 days
Suspended	7 days
Volatile Suspended	7 days
Total	7 days
Volatile Total	7 days
Settleable	48 hours

Quality Control:

- Sample should be analyzed as soon as possible after collection for best results.
- Exclude unrepresentative particles such as leaves, sticks, or large solids.
- Glass bottles are desirable. Plastic bottles are satisfactory provided that the material in suspension in the sample does not adhere to the walls of the container. Store samples that are likely to contain iron or manganese so that oxygen will not come into contact with the water. Analyze these samples promptly to minimize the possibility of chemical or physical change during storage.

Sulfate

Apparatus and Materials:

- Polyethylene or glass bottles.

Sample Collection, Preservation, and Handling:

- In the presence of organic matter, certain bacteria may reduce sulfate to sulfide. To avoid this, samples are stored at 4°C.
- All samples must be analyzed within 28 days of collection.

Quality Control:

- No special precautions.

Sulfide

Apparatus and Materials:

- Polyethylene or glass bottles.
- Zinc Acetate [$Zn(C_2H_3O_2)_2$], 2 N.
- Sodium hydroxide (NaOH), 6 N.

Sample Collection, Preservation, and Handling:

- Take sample with a minimum of aeration. Preserve sample by addition of 2 ml of 2N zinc acetate; raise pH to >9 using NaOH. Fill sample bottle completely allowing no headspace.
- Store sample at 4°C.
- All samples must be analyzed within 7 days of collection.

Quality Control:

- It is important that all sample bottles are sealed airtight, with no entrapped air.

Sulfite

Apparatus and Materials:

- Polyethylene or glass bottles.

Sample Collection, Preservation, and Handling:

- Collect a fresh water sample, allow as little contact with air as possible, as air will oxidize the sulfite to sulfate.
- All samples should be analyzed onsite.

Quality Control:

- It is important that all sample bottles be sealed airtight, with no entrapped air.

Surfactants

Apparatus and Materials:

- Polyethylene or glass bottles.

Sample Collection, Preservation, and Handling:

- Store samples at 4°C
- All samples must be analyzed within 48 hours of collection.

Quality Control:

- No special precautions.

Total Organic Carbon (TOC)

Apparatus and Materials:

- Glass bottles, with Teflon lined caps.
- Conc. hydrochloric acid (HCl) (ACS).

Sample Collection, Preservation, and Handling:

- Acidify samples with conc. hydrochloric acid to a pH of 2.0 or less.
- Store samples at 4°C.
- All samples should be analyzed within 28 days of collection.

Quality Control:

- Avoid exposure of the sample to light and atmosphere, minimize storage time.

Total Organic Halide (TOX)

Apparatus and Materials:

- Glass bottles, amber, with Teflon lined caps.
- Sodium sulfite, Na_2SO_3, 0.1 M

Sample Collection, Preservation, and Handling:

- If amber glass bottles are not available, samples should be protected from light.
- Samples should be stored at 4°C without headspace.
- Reduce residual chlorine by the addition of 1 ml of 0.1 M sodium sulfite per liter of sample.
- TOX may increase with storage, therefore, samples should be analyzed as soon as possible after collection; maximum holding time should not exceed 7 days.

Quality Control:

- Glassware used in TOX sampling and analysis must be thoroughly cleaned. All glassware should be washed using detergent and hot water, rinsed with tap water and, as a final rinse, deionized water. Drain dry and heat at 105°C for 1 hour. Glassware should be sealed and stored in a clean area after drying and cooling.

Turbidity

Apparatus and Materials:

- Polyethylene or glass bottles.

Sample Collection, Preservation, and Handling:

- Store samples at 4°C.
- All samples must be analyzed within 48 hours of collection.

Quality Control:

- Turbidity analysis should be performed on the day the sample is taken. If longer storage is unavoidable, store samples in the dark for up to 48 hours. Prolonged storage before measurement is not recommended because irreversible changes in turbidity may occur.

TABLE A-1. RECOMMENDED SAMPLING AND PRESERVATION PROCEDURES FOR WATER AND WASTEWATER

Parameter	Collection technique	Container[a]	Preservation	Holding time[b]	Minimum required volume (ml)
Acidity	Grab or composite	P,G	Cool, 4°C	14 days	100
Alkalinity	Grab or composite	P,G	Cool, 4°C	14 days	100
Asbestos	Grab or composite	P	Cool, 4°C[c]	48 hours	1000
Bacteria	Grab only	Pro, G	Cool, 4°C, 10% $Na_2S_2O_3$, EDTA	6 hours	200
Bicarbonate	Grab only	P,G	Determine onsite	No holding	100
BOD	Grab only	P,G	Cool, 4°C	48 hours	1000
Bromide	Grab or composite	P,G	None required	28 days	100
Carbonate	Grab only	P,G	Determine onsite	No holding	100
Chloride	Grab or composite	P,G	None required	28 days	50
Chlorine Demand	Grab only	P,G	Determine onsite	No holding	200
Chromium VI	Grab or composite	P,G	Cool, 4°C	24 hours	100
COD	Grab only	P,G	H_2SO_4 to pH <2; Cool, 4°C	28 days	50
Color	Grab or composite	P,G	Cool, 4°C	48 hours	50
Conductance	Grab or composite	P,G	Cool, 4°C	28 days	100
Cyanide	Grab or composite	P,G	NaOH to pH >12, 0.6g Ascorbic acid[d]	14 days	500
Fluoride	Grab or composite	P	None required	28 days	300
Hardness	Grab or composite	P,G	HNO_3 to pH <2	6 months	100
Hydrazine	Grab or composite	P,G	If not analyzed immediately, collect under acid. Add 90 ml of sample to 10 ml (1 + 9) HCl	7 days	100

(continued)

TABLE A-1 (continued)

Parameter	Collection technique	Container[a]	Preservation	Holding time[b]	Minimum required volume (ml)
Iodide	Grab or composite	P,G	Cool 4°C	24 hours	100
Iodine	Grab only	P,G	Determine onsite	No holding	500
Metals (Except Cr VI)					
Dissolved	Grab or composite	P,G	Filter onsite, HNO_3 to pH < 2	6 months, except Hg--28 days	200
Suspended	Grab or composite	P,G	Filter onsite	6 months, except Hg--28 days	200
Total	Grab or composite	P,G	HNO_3 to pH < 2	6 months, except Hg--28 days	100
Nitrogen					
Ammonia	Grab or composite	P,G	Cool, 4°C, H_2SO_4 to pH < 2	28 days	400
Kjeldahl (total)	Grab or composite	P,G	Cool, 4°C, H_2SO_4 to pH < 2	28 days	500
Nitrate plus Nitrite	Grab or composite	P,G	Cool, 4°C, H_2SO_4 to pH < 2	28 days	100
Nitrate	Grab or composite	P,G	Cool, 4°C, H_2SO_4 to pH < 2	48 hours	100
Nitrite	Grab or composite	P,G	Cool, 4°C	48 hours	50
Oil & Grease	Grab only	G	Cool 4°C, H_2SO_4 to pH < 2	28 days	1000
Organics					
Extractables (base/ neutrals and acids)	Grab or composite	G, Teflon-lined cap	Cool, 4°C	7 days until extraction, 30 days after extraction	1000

(continued)

TABLE A-1 (continued)

Parameter	Collection technique	Container[a]	Preservation	Holding time[b]	Minimum required volume (ml)
Organics (cont.)					
Purgeables (halocarbons-aromatics)	Grab only	G, Teflon-lined cap	Cool, 4°C	14 days	40
Purgeables (acrolein and acrylonitrile)	Grab only	G, Teflon-lined cap	Cool, 4°C	14 days	40
Pesticides and PCBs	Grab or composite	G, Teflon-lined cap	Cool, 4°C	7 days until extraction, 30 days after extraction	250
pH	Grab only	P,G	Determine onsite	2 hours	25
Phenol	Grab or composite	G	Cool, 4°C, H_2SO_4 to pH <2	24 hours	500
Phosphorus					
Ortho phosphate	Grab or composite	P,G	Filter onsite, cool, 4°C	48 hours	50
Phosphorus, Total	Grab or composite	P,G	Cool, 4°C, H_2SO_4 to pH <2	28 days	50
Radioactivity	Grab or composite	P,G	HNO_3 to pH <2	6 months	1 gal
Silica					
Dissolved	Grab or composite	P	Cool, 4°C	28 days	50
Total	Grab or composite	P	Cool, 4°C	28 days	50
Solids					
Dissolved	Grab or composite	P,G	Cool, 4°C	7 days	100
Volatile Dissolved	Grab or composite	P,G	Cool, 4°C	7 days	100
Suspended	Grab or composite	P,G	Cool, 4°C	7 days	100

(continued)

TABLE A-1 (continued)

Parameter	Collection technique	Container[a]	Preservation	Holding time[b]	Minimum required volume (ml)
Solids (cont.)					
Volatile Suspended	Grab or composite	P,G	Cool, 4°C	7 days	100
Total	Grab or composite	P,G	Cool, 4°C	7 days	100
Volatile Total	Grab or composite	P,G	Cool, 4°C	7 days	100
Settleable	Grab or composite	P,G	Cool, 4°C	48 hours	100
Sulfate	Grab or composite	P,G	Cool, 4°C	28 days	50
Sulfide	Grab or composite	P,G	Cool, 4°C, 2 ml zinc acetate plus NaOH to ph > 9	7 days	500
Sulfite	Grab or composite	P,G	Determine onsite	No holding	50
Surfactants	Grab or composite	P,G	Cool, 4°C	48 hours	250
TOC	Grab or composite	G, Teflon-lined cap	Cool, 4°C, HCl to pH < 2	28 days	25
TOX	Grab or composite	G, Amber, Teflon-lined cap	Cool, 4°C, add 1 ml 0.1 M sodium sulfite	7 days	100
Turbidity	Grab or composite	P,G	Cool, 4°C	48 hours	100

[a]P = Polyethylene, G = Glass, Pro = Polypropylene

[b]The holding times are those listed in Technical Additions to Methods for Chemical Analysis of Water and Wastes, EPA-600/4-82-055 and Methods for Organic Chemical Analysis of Municipal and Industrial Wastewater, EPA-600/4-82-057.

[c]If samples cannot be filtered within 48 hours, add 1 ml of a 2.71% solution of mercuric chloride to inhibit bacterial growth.

[d]Should only be used in the presence of residual chlorine.

APPENDIX B

EQUIPMENT AVAILABILITY AND FABRICATION

I. EQUIPMENT AVAILABILITY

Apparatus

- Stainless Steel Scoops, Trays, Beakers, Ladles
  8,9,15

- Thin Wall Tube Samplers, Soil Augers, Hand Corers
  45,50

- Gravity Corers, Dredges and Grabs
  40,45

- Thiefs and Triers
  9,34

- Water Level Indicators
  38,45

- Down Hole Submersible Probes
  23,25,43,51

- Bailers, Coliwasa
  26,34,48

- Peristaltic Pumps
  8,9,15,29

- Gas Displacement Pumps
  5,48

- Combustible Gas Detectors
  3,13,16,17,33,36,41

- Oxygen Monitors
  6,13,16,17,33,36,41

- Portable Flame Ionization Detectors
  1,2

- Portable Photoionization Detectors
  22,37

- Stain Detector Tubes
  7,17,31,33,35

- Personal Sampling Pumps
  7,11,14,19,28,32,33,39,46

- High Volume Air Samplers
  18,39,44

- Radiation Dosimeters
  4,10,20,47,49

- Radiation Film Badges
  12,20,24,42

- Radiation Survey Instruments
  4,10,12,20,21,27,30,47,49

Vendors

1. Analabs, Inc.
   80 Republic Drive
   North Haven, CT 06473
   (203) 288-8463

2.. Analytical Instrument Development, Inc.
   Rt. 41 and Newark Rd.
   Avondale, PA 19311
   (215) 268-3181

3. Bacharach Instrument Company
   301 Alpha Drive
   Pittsburgh, PA 15238
   (412) 782-3500

4. Baird Atomic
   125 Middlesex Turnpike
   Bedford, MA 01730
   (617) 276-6000

5. BarCad System, Inc.
   P.O. Box 424
   Concord, MA 01742
   (617) 969-0050

6. Beckman Instruments, Inc.
   Process Instrument Division
   2500 Harbor Boulevard
   Fullerton, CA 92634

7. Bendix Corporation
   Environmental and Process Instruments Division
   P.O. Drawer 831
   Ronceverte, WV 24970
   (304) 647-4358

8. Cole Palmer
   7425 North Oak Park Ave.
   Chicago, Illinois 60648
   (800) 323-4340

9. Curtin Matheson Scientific
   Major Metropolitan Areas

10. Dosimeter Corporation of America
    P.O. Box 42377
    Cincinnati, OH 45242
    (513) 489-8100

11. DuPont Company
    Applied Technology Division
    Concord Plaza - Clayton Bldg.
    Wilmington, DE 19898
    (302) 772-5989

12. Eberline Instruments
    P.O. Box 2108
    Santa Fe, NM 87501
    (505) 471-3232

13. Energetics Science
    Six Skyline Drive
    Hawthorne, NY 10532

14. Environmental Measurements, Inc.
    215 Leidesdorff Street
    San Francisco, CA 94111
    (415) 398-7664

15. Fisher Scientific
    Major Metropolitan Areas

16. Gas Measurement Instruments Ltd.
    Inchinnan Estate
    RenfrewPA49RG
    (041) 812-3211

17. GasTech Inc.
    Johnson Instrument Division
    331 Fairchild Drive
    Mountain View, CA 94043
    (415) 967-6794

18. General Metal Works Inc.
    8368 Bridgetown Road
    Village of Cleves, OH 45002
    (513) 941-2229

19. Gilian Instrument Corp.
    1275 Route 23
    Wayne, NJ 07470
    (201) 696-9244

20. Gulf Nuclear
202 Medical Center Boulevard
Webster, TX 77598
(713) 332-3581

21. Health Physics Instruments
124 San Felicia Drive
Goleta, CA 93117
(805) 685-2612

22. HNU Systems, Inc.
30 Ossipee Road
Newton Upper Falls, MA 02164
(617) 964-6690

23. Hydrolab Corporation
P.O. Box 9406
Austin, TX 78766
(512) 255-8841

24. ICN Dosimetry Service
26201 Niles Road
Cleveland, OH 44128
(216) 831-3000

25. Industrial & Environmental Analysts Inc.
P.O. Box 626
Essex Junction, VT 05452
(802) 878-5138

26. Johnson Division
UOP, Inc.
St. Paul, MN 55164
(612) 636-3900

27. Johnston Laboratories
P.O. Box 20086
383 Hillen Road
Towson, MD 21204
(301) 337-8700

28. Kurz Instruments Inc.
P.O. Box 849
Carmel Valley, CA 93924
(408) 659-3421

29. Leonard Mold and Die
960 West 48th Avenue
Denver, CO 80221
(303) 433-7101

30. Ludlum Measurements
P.O. Box 248
Sweetwater, TX 79556
(915) 235-5494

31. Matheson Safety Products
P.O. Box 85
932 Paterson Plank Road
East Rutherford, NJ 07073
(201) 933-2400

32. MDA Scientific, Inc.
1815 Elmdale Ave.
Glenview, IL 60025

33. Mine Safety Appliance Co.
600 Penn Center Boulevard
Pittsburgh, PA 15235

34. Nasco
901 Janesville Ave.
Fort Atkinson, WI 53538
(414) 563-2446

35. National Draeger, Inc.
101 Technology Drive
Pittsburgh, PA 15275
(412) 787-8383

36. National Mine Service Company
Industrial Safety Division
355 N. Old Steubenville Pike
Oakdale, PA 15071
(412) 788-4353

37. Photovac, Incorp.
134 Doncaster Ave.
Unit 2
Thornhill
Ontario, Canada L3T1L3

38. Powers Electric Products Company
P.O. Box 11591
Fresno, CA 93774

39. Research Appliance Company
Moose Lodge Road
Cambridge, MD 21613
(301) 228-9505

40. Research Instrument Manufacturing Co. Ltd.
RR No. 2 Guelph
Ontario, Canada N1H6H8
(519) 822-1547

41. Rexnord Safety Products/Biomarine Ind.
45 Great Valley Parkway
Malvern, PA 19355
(215) 647-7200

42. R.S. Landauer Jr. Company
Division of Technical Operations, Inc.
Science Road
Glenwood, IL 60425
(312) 755-7000

43. Sensorex
9713 Bolsa Ave.
Westminster, CA 92683
(714) 554-7090

44. Sierra Instruments Inc.
P.O. Box 909
Carmel Valley, CA 93924
(408) 659-3177

45. Soiltest, Inc
2205 Lee Street
Evanston, IL 60202
(312) 869-5500

46. Spectrex Corporation
3594 Haven Ave.
Redwood City, CA 94063
(415) 365-6567

47. Technical Associates
7051 Eton Avenue
Canoya Park, CA 91303
(213) 883-7043

48. Timco Manufacturing Company, Inc.
P.O. Box 35
Prairie Du Sac, WI 53578
(608)-643-8534

49. Victoreen, Inc.
10101 Woodland Ave.
Cleveland, OH 44104
(216) 795-8200

50. Wildco
301 Cass Street
Saginaw, MI 48602
(517) 799-8100

51. Yellow Springs Instrument Co.
Yellow Springs, OH 45387
(513) 767-7241

II. EQUIPMENT FABRICATION

Many of the instruments and devices listed previously can also be readily fabricated in-house. This usually affords considerable cost savings as well as allows for custom designs and alterations.

Bailers, coliwasas and hand corers can be constructed from available stainless steel and teflon stock. The diagrams and drawings which accompany their description in the text show nominal dimensions and construction materials. Sizes can however be altered to fit particular needs. The sources cited with these drawings as well as the references at the end of the method comment further on their construction and use.

The device used in Method IV-12: Sampling of Headspace Gases in Sealed Vessels, is not currently available through commercial sources. The fabrication details are therefore included in this Appendix.

SEALED VESSEL TAPPING DEVICE ASSEMBLY

1. Fabricate mounting plate.

2. Position Portalign on mounting plate, drill 6.4 mm holes through Portalign base and mounting plate. Tap holes for 7.14 mm thread in mounting plate. Secure Portalign to mounting plate with 7.14 mm SAE bolts.

3. Thread ball valve into mounting plate.

4. Thread Swagelok cross assembly onto ball valve.

5. Insert drill bit into chuck of drill.

6. Insert drill into Portalign assembly per manufacturer's instruction. Pass drill bit through Teflon ferrule.

7. Place part 101-6 so that it stops drill bit travel approximately 10 mm below bottom of gasket material on mounting plate.

8. Mount entire assembly onto container using standard steel strap packaging equipment.

9. Place springs over Portalign guide rods.

10. Push springs down until good tension is obtained. Secure with extra 101-6 and 101-8 parts.

11. Finger tighten compression nut containing Teflon ferrules.

Parts

1. Mounting Plate-- 12.7 mm thick x 76 mm wide x 127 mm long, mild steel.

   19.1 mm x 3.2 mm deep channel on top of each side. A 6.4 mm NPT hole in center of plate.

   Bottom of mounting plate covered with 4.8 mm thick closed cell Neoprene gasket.

2. Ball Valve-- 316 stainless steel, 6.4 mm male NPT thread one end, 6.4 mm female PNT other end.

3. Swagelok Cross-- 316 stainless steel, three sides 6.4 mm male NPT, 6.4 mm Swagelok side.

   Assemble as Follows:

   A. 0-50 psig pressure gauge, 6.4 mm female NPT to one side of cross.

   B. 316 stainless steel, 6.4 mm male NPT to 6.4 Swagelok needle valve, mount opposite pressure gauge.

   C. 6.4 mm Teflon ferrules into 6.4 mm Swagelok fitting.

4. Drill Bit-- 4 mm drill bit, 140 mm long, flutes approximately 12 mm long.

5. Drill-- Skill Model No. 2002 hand drill, cordless. Wired to operate remotely at 300 rpm. Interlocked with microswitch attached to depth stop.

6. Portalign Drill Assembly-- Portalign, Portalign Tool Company, San Diego, California, as shown below.

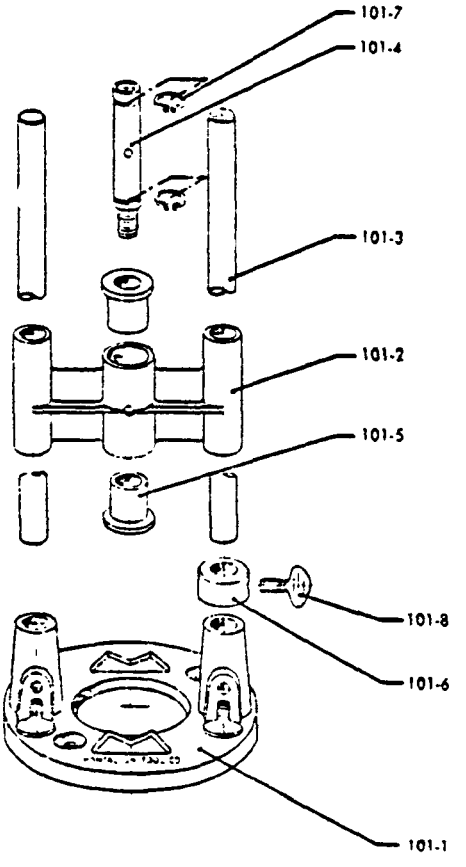

Parts List

101-1 Base Ring
101-2 Adapter
101-3 Guide
101-4 Spindle
101-5 Bearing
101-6 Lock Collar
101-7 Snap Ring
101-8 Thumb Screw

Portalign drill guide

Additional Parts Required Per Assembly

2 each 101-8 } From Portalign
2 each 101-6 }

2 each Springs to fit over guide rods of Portalign approximately 30 kg force each spring when compressed.

APPENDIX C

PACKING AND SHIPPING GUIDELINES

I. INTRODUCTION

The Federal Regulations set forth by the Department of Transportation (DOT) for the packaging, labeling, and shipping of hazardous materials are extensive and broadly applicable. Therefore, a copy of the DOT requirements as described in the Code of Federal Regulations, 49 CFR 171-177, is an essential reference for those anticipating the need to ship samples of hazardous materials. What follows are generalized guidelines for compliance with DOT standards, along with references to the applicable sections in the Federal Register. It may be prudent to check with state and local agencies for any additional requirements or restrictions they may have.

II. SAMPLE TYPES

In selecting the proper shipping procedures it should first be decided which of the two basic categories the sample falls into: Environmental Sample or Hazardous Substance Sample. An additional need for this distinction is to provide bases for selecting health and safety precautions for the laboratory personnel receiving and handling the samples.

A. Environmental Samples--These are samples of soil, water, or air usually collected offsite of a hazardous waste dump or chemical spill and are therefore not expected to be contaminated with high concentrations of toxic materials. The function of "environmental sample" collection is usually to monitor the extent of contamination and/or the offsite transport of contaminated materials. If there is doubt as to the suitability of a sample to this classification it should be placed in the Hazardous Substance category.

B. Hazardous Substances--Samples falling into this group are known or expected to be contaminated at concentrations that are potentially harmful; including, but not limited to, onsite samples of soil or water, samples from drums or bulk storage tanks, contaminated pools, lagoons, etc., and leachates from hazardous waste sites.

These are operational definitions intended to aid in making decisions concerning sample handling and shipping. The specifics of the DOT definitions are found in 40 CFR §§261.3 and 261.4.

III. ENVIRONMENTAL SAMPLES

Although packaging and shipping requirements for environmental samples (associated with hazardous waste situations) are not as stringent as for hazardous waste samples, it is recommended that the following general packing procedure be utilized to ensure safe delivery and maintain sample integrity. This becomes especially important when samples are being transported by common carrier. If sufficient information is available concerning the nature of the sampled material, the following may be relaxed accordingly.

A. Packing

1. Place sample bottle properly labeled and sealed into a plastic bag and then into a metal paint can such that the bag is surrounded on all sides with an absorbent cushioning material, such as vermiculite. Securely affix top on can.

2. Place a "This Side Up" label on the can top and indicate the top with arrows on the side of the can.

3. Place a label on the outside of the can specifying "Environmental Sample."

4. Put a layer of absorbent cushioning material in the bottom of a hard plastic lined metal cooler.

5. Place cans in the cooler with proper end up and fill in around the cans with additional absorbent cushioning material.

6. If required, include sealed plastic bags of ice before closing cooler.

7. Seal the space between the cooler bottom and lid with fiberglass tape.

8. Make several wraps around the cooler perpendicular to the seal to assure that the lid will remain closed if the latch is accidentally released or damaged.

9. Also tape the cooler drain plug so it will not open.

10. Place a complete address label on the lid of the cooler including the name, address, and phone number of the receiving laboratory and the return address and phone number of the shipper (49 CFR §261.4(d)(2)).

11. Place a "This End Up" label on the lid of the cooler and "This End Up" arrows on all four sides.

12. Secure the contents with a hasp and lock (if cooler is so equipped) or a custody seal signed and affixed across the cooler lid and side.

13. This parcel is suitable to be shipped by commercial air cargo transporter, rail, or truck.

It should be noted that the addition of the following "hazardous" compounds as preservatives to environmental samples will not alter the Environmental classification provided the following criteria are met:

1. Hydrochloric acid solutions at concentrations 0.04 percent (w/w) or less.

2. Mercuric chloride in water solutions at concentrations less than or equal to 0.004 percent (w/w).

3. Nitric acid in water, concentrations less than or equal to 0.15 percent (w/w).

4. Sulfuric acid solutions, concentrations less than or equal to 0.035 percent (w/w).

5. Sodium hydroxide in water, concentrations less than or equal to 0.080 percent (w/w).

6. Phosphoric acid in water, concentrations yielding a pH range between 4 and 2.

IV. HAZARDOUS SUBSTANCE SAMPLES

Samples known or suspected to contain hazardous materials must be regarded as hazardous substances and be transported in coherence with DOT requirements. Samples with known or suspected hazardous constituents should be prepared and shipped as specified in 49 CFR 101, the DOT Hazardous Materials Table. When the exact nature of a substance is unknown or in question, a tentative class assignment should be made (49 CFR §§172.402(h) and 173.2) assuming a worst case designation. Start with the most severe classification of the sequence of precedence (49 CFR §173.2) shown in Table C-1 unless reliable information exists for elimination of that category. Therefore, a sample would be treated as radioactive unless knowledge of the sample or radiation detection measurements contradict this classification. Poison A would then be the next designation to consider, until reliable information provides for assigning it to the next applicable category. Of the Poison A group bromoacetone, cyanogen chloride (at temperatures less than 13.1°C), hydrocyanic acid (prussic) solution, methyldichloroarsine, and phosgene (diphosgene) occur as liquids. If a liquid can, by available reliable information, be exempted from this category, or if the sample is a solid then the next designation to apply is Flammable Liquid.

The packaging procedures previously described for environmental samples are suitable for the flammable liquids and all subsequent categories. There are additional requirements, however.

1. Sample bottles should be filled allowing sufficient ullage (approximately 10 percent of volume) to prevent the liquid from completely filling the bottle at 55°C (130°F).

2. Sample bottles should contain no more than 1 quart of liquid.

3. Labeling on the cooler must include

TABLE C-1. DOT PRIORITY RANKING OF HAZARDOUS MATERIALS

	Category	Definition	Applicable regulations
	General		49 CFR 173.1-173.34, 177
1	Radioactive Material	49 CFR 173.389	49 CFR 173.390-173.398
2	Poison A	49 CFR 173.326	49 CFR 173.327-173.337
3	Flammable Gas	49 CFR 173.300	49 CFR 173.300-173.316
4	Nonflammable Gas	49 CFR 173.300	49 CFR 173.300-173.316
5	Flammable Liquid	49 CFR 173.115	49 CFR 173.116-173.119, 173.121-173.149a
6	Oxidizer	49 CFR 173.151	49 CFR 173.152-173.239a
7	Flammable Solid	49 CFR 173.150	49 CFR 173.152-173.239a
8	Corrosive Material (Liquid)	49 CFR 173.240	49 CFR 173.241-173.299a
9	Poison B	49 CFR 173.343	49 CFR 173.344-173.379
10	Corrosive Material (Solid)	49 CFR 173.240	49 CFR 173.241-173.299a
11	Irritating Materials	49 CFR 173.381	49 CFR 173.381-173.385
12	Combustible Liquid (in containers exceeding 100 gal capacity)	49 CFR 173.115	49 CFR 173.116-173.118a, 173.121-173.149a
13	ORM-B	49 CFR 173.800	49 CFR 173.510, 173.800-173.862
14	ORM-A	49 CFR 163.605	49 CFR 173.510, 173.605-173.655
15	Combustible Liquid (in containers having capacities of 110 gal or less)	49 CFR 173.115	49 CFR 173.116-173.118a, 173.121-173.149a
16	ORM-E	49 CFR 173.1300	49 CFR 173.510

- "Laboratory Samples" label.
- "This End Up" label on lid.
- "This End Up" arrows on all four sides.
- "Flammable Liquid, n.o.s." label ("n.o.s.": not otherwise specified).
- Address label with name, address, and phone number of receiving lab; and a return address with the same information for the sender.

4. Air transport permitted solely on cargo only aircraft.

Sources

1. NEIC Policies and Procedures. EPA-330/9-78-001-R (Revised December 1981).

2. Technical Methods for Investigating Sites Containing Hazardous Substances. (Draft.) Sampling, Handling, Packaging, and Shipping Procedures. EPA Technical Monograph No. 22, June, 1981.

3. U.S. Department of Transportation Code of Federal Regulations. 49 CFR.

APPENDIX D

DOCUMENT CONTROL/CHAIN-OF-CUSTODY PROCEDURES

GENERAL

Adherence to strict document control and chain-of-custody procedures is extremely important especially in relation to surveys at hazardous waste sites. The legal implications alone demand that accountability be given an utmost priority. The basic aspects of document control and chain-of-custody have therefore been included in this section. For additional information, the following publication, from which this section was developed, should be consulted.

- NEIC Policies and Procedures Manual, EPA-330-78-001R, May 1978 (revised December 1981), Section II

DOCUMENT CONTROL

The purpose of document control is to assure all project documents will be accounted for when the project is complete. Document control should include the use of serialized documents, a document inventory procedure and an adequate document filing system, all issued by, under the control of, and maintained by an appointed Document Control Officer (DCO). Table D-1 lists the principal items subject to document control during a specific project.

Serialized Documents

Sample collection and analytical tags, and chain-of-custody records should have preprinted serial numbers. It is not necessary that a sample tag number match a custody record number, however, it is necessary that all issued numbers be appropriately accounted for by the DCO. It is also necessary that in the event a tag or custody record is damaged, lost or destroyed prior to its use, its serial number and disposition are recorded.

Other Documents

Other documents used during the conduct of a project (e.g., field logbooks, laboratory notebooks, data sheets, etc.) should be appropriately coded with a unique identifier to ensure accountability. The project DCO will be responsible for development of the document identification system, paying particular attention to its utility and consistency for the specified program. An example of a document identification system is as follows:

Project Code	Subcontractor Code (if necessary)	Document Code	Serial Number
00-000-000-	-00-	-A-	-00001

In addition, a listing of suggested document codes is shown in Table D-2.

TABLE D-1. DOCUMENTS SUBJECT TO CONTROL

Project Work Plan
Project Logbooks
Field Logbooks
Sample Data Sheets
Sample Tags
Chain-of-Custody Records
Laboratory Logbooks
Laboratory Data, Calculations, Graphs, etc.
Sample Checkout
Sample Inventory
Internal Memos
External Written Communication
Confidential Information
Photographs, Drawings, Maps
Quality Assurance Plan
Litigation Document
Final Report

TABLE D-2. SUGGESTED DOCUMENT CODES

Document	Code letter
Project Work Plans	A
Project Logbooks	B
Sampling Logbooks	C
Sampling Data Sheets	D1, D2 etc.
Sampling Coding Form	E
Laboratory Notebooks	G
Laboratory Data Sheets	H1, H2 etc.
Sample Logs	L1, L2 etc.
Internal Memos	M
External Written Communication	N
Confidential Information	O
Photos, Maps, Drawings	P
QA Plan	Q
Reports	R
Final Report	FR
Miscellaneous	X

CHAIN-OF-CUSTODY

The primary need for the implementation of chain-of-custody procedures stems from the possibility that a sample or a piece of data derived from the collection of a sample will be used as physical evidence in an enforcement action. The purpose of chain-of-custody in these instances is to trace the possession of a sample from the time of collection, until it or the derived data is introduced as evidence in legal proceedings. Custody records should, therefore, trace a sample from its collection, through all transfers of custody, until it is delivered to the analytical laboratory. At this point, internal laboratory records should document sample custody until its final disposition.

In order to establish that a sample is valid, it is also necessary to document the measures taken to prevent and/or detect tampering--either to the sample itself, the sampling equipment used or the environment sampled. This is done by the use of evidence tape, locks and custody seals, and documented entries noting their condition in field and laboratory log books. The custody record must document any tampering that may have occurred; the absence of any such comments indicates no tampering observed or noticed during the period of custody.

Since it may not always be possible to know ahead of time if a sample will be used as evidence in future legal actions, it is a good common sense practice to institute a proper chain-of-custody in all instances. Use of such practices as standard operating procedures on a project to project basis will contribute to the consistency and quality of the generated data.

Sample Identification

Preprinted, preserialized sample collection tags are recommended to identify samples collected for shipment to the analytical laboratory. Specific analysis tags may also be issued by the analytical laboratory after the sample has arrived. All collected samples, including duplicates and field blanks should be completely filled in with a minimum of the following information:

- Project Code } Assigned by the Document Control Officer (DCO)
- Location Number } Assigned by the Document Control Officer (DCO)
- Date of Collection
- Time of Collection
- Location Description
- Signature of Sampler

- Lab Sample Number--Assigned by the Analytical Laboratory

- Remarks Section

An example of an appropriate sample collection tag is shown in Figure D-1.

After sample analysis and appropriate quality assurance checks have been made, original sample collection tags are to be stored in a document file maintained by the DCO and the tag serial number is recorded in a master log for future reference. Maintaining such files and records is an important aspect of sample traceability and provides a needed cross referencing tool that can be used to correlate any one of the identifying numbers and sources (e.g., collection tag, laboratory number, master log, etc.) with a specific sample.

Chain-of-Custody Forms

There are many transfers of custody during the course of a sampling program, from time of collection through final sample disposition, and all samples should be accompanied by a Chain-of-Custody Record to document these transfers. In some instances, such as in the collection of air samples on solid sorbents, it becomes necessary to initiate custody procedures from collection media preparation on as the sorbent itself becomes part of the sample after collection is complete. Laboratories providing QC samples must also initiate a custody record. The use of a customized record sheet, such as the one shown in Figure D-2 fulfills these requirements by providing a convenient format for recording pertinent information.

The custody records are used for a packaged lot of samples; more than one sample will usually be recorded on one form. More than one custody record sheet may be used for one package, if necessary. Their purpose is to document the transfer of a group of samples traveling together; when the group of samples changes, a new custody record is initiated. The original of the custody record always travels with the samples; the initiator of the record keeps the copy. When custody of the same group of samples changes hands several times, some people will not have a copy of the custody record. This is acceptable as long as the original custody record shows that each person who had received custody has properly relinquished it.

In general, the following procedures should be followed when using the custody record sheets.

- The originator fills in all requested information from the sample tags (except in the case of air collection media and external QC samples which will be accompanied by custody forms from the originating facility).

- The person receiving custody checks the sample tag information against the custody record. He also checks sample condition and notes anything unusual under "Remarks" on the custody form.

N 1000

Sample Code																							DATE	TIME
	CONTRACT NO:																							
	DESIGNATE																					TEMPERATURE	pH	PRESERVATIVE
	COMP	GRAB																						
Seq. No.	SOURCE																				SAMPLER (Signature):			
Control No.			Phosphate	Br^-, F^-, Color	Sulfide	Sulfate, Surfactants	Nitrate, Nitrite	NH_3, Org. N	COD, TOC	Radioactivity	Bacteria	BOD	Solids	Oil and Grease	Phenols	Cyanide	Trace Elements	Pesticides/PCBs	Extractable Org.	Volatile Organics	ANALYSES			

Figure D-1. Sample Collection Tag.

CHAIN OF CUSTODY RECORD

Project Code	Project Name
SAMPLERS (Signature)	

REMARKS

Relinquished by (Signature)	Date/Time	Received by (Signature)	Relinquished by (Signature)	Date/Time	Received by (Signature)
Relinquished by (Signature)	Date/Time	Received by (Signature)	Relinquished by (Signature)	Date/Time	Received by (Signature)
Relinquished by (Signature)	Date/Time	Received for Laboratory by (Signature)	Date/Time	Remarks	

N 1000

Figure D-2. Chain-of-Custody Form.

- The originator signs in the top left "Relinquished by" box and keeps the copy.

- The person receiving custody signs in the adjacent "Received by" box and keeps the original.

- The Date/Time will be the same for both signatures since custody must be transferred to another person.

- When custody is transferred to the Sample Bank or an analytical laboratory, blank signature spaces may be left and the last "Received by" signature box used. Another approach is to run a line through the unused signature boxes.

- In all cases, it must be readily seen that the same person receiving custody has relinquished it to the next custodian.

- If samples are left unattended or a person refuses to sign, this must be documented and explained on the custody record.

Receipt for Samples Form

When it becomes necessary to split samples with another source, a separate receipt for samples form (Figure D-3) is prepared and marked to indicate with whom the samples have been split. The signature of the person receiving the samples is required and if this person refuses to sign, it should be noted in the "Received by" space.

This form also complies with requirements of both Section 3007(a)(2) of RCRA and Section 104 of the Comprehensive Environmental Response Compensation and Liability Act. These sections both state that "...If the officer, employee or representative obtains any samples prior to leaving the premises, he shall give to the owner, operator, or agent-in-charge a receipt describing the samples obtained and, if requested, a portion of such sample equal in volume or weight to the portion retained." A copy of the completed form must be given to one of the above described individuals, even if the offer for split samples is declined.

Custody Seals

Custody seals are narrow strips of adhesive paper used to demonstrate that no tampering has occurred. They may be used on sampling equipment or a house door, but they are intended for use on a sample transport container which is not secured by a padlock. They are not intended for use on individual sample containers.

RECEIPT FOR SAMPLES

PROJ NO	PROJECT NAME	Name of Facility
SAMPLERS *(Signature)*		Facility Location
Split Samples Offered ( ) Accepted ( ) Declined		

STA NO	DATE	TIME	COMP	GRAB	SPLIT SAMPLES	TAG NUMBERS	STATION DESCRIPTION	NO OF CON-TAINERS	REMARKS

Transferred by *(Signature)*			Received by *(Signature)*		Telephone
Date		Time	Title	Date	Time

Distribution Original to Coordinator Field Files, Copy to Facility

N 349

Figure D-3. Receipt for Sample form.

Laboratory Custody Procedures

An onsite sample bank, the sampling laboratory area and any analytical laboratory used for analyses are considered to be working "laboratories" subject to laboratory custody procedures. Each laboratory should have a designated sample custodian who implements a system to maintain control of the samples.

This includes accepting custody of arriving samples, verifying that information on the sample tags match the Chain-of-Custody Record, assigning unique laboratory numbers and laboratory sample tags and distributing the samples to the analyst.

The designated custodian is also responsible for retaining all original identifying tags, data sheets and laboratory records as part of the permanent project file.

Questions/Problems Concerning Custody Records

If a discrepancy between sample tag numbers and custody record listings is found, the person receiving custody should document this and properly store the samples. The samples should not be analyzed until the problem is resolved.

The responsible person receiving custody should attempt to resolve the problem by checking all available information (other markings on sample container, type of sample, etc.). He should then document the situation on the custody record and in his project logbook and notify the project QA Manager by the fastest available means, followed by written notification.

Changes may be written in the "Remarks" section of the Custody record and should be initialed and dated. A copy of this record should accompany the written notification to the QA Manager.

APPENDIX E

APPLICABLE TABLES

TABLE E-1. RANDOM NUMBERS

03	47	43	73	86	36	96	47	36	61	46	98	63	71	62
97	74	24	67	62	42	81	14	57	20	42	53	32	37	32
16	76	62	27	66	56	50	26	71	07	32	90	79	78	53
12	56	85	99	26	96	96	68	27	31	05	03	72	93	15
55	59	56	35	64	38	54	82	46	22	31	62	43	09	90
16	22	77	94	39	49	54	43	54	82	17	37	93	23	78
84	42	17	53	31	57	24	55	06	88	77	04	74	47	67
63	01	63	78	59	16	95	55	67	19	98	10	50	71	75
33	21	12	34	29	78	64	56	07	82	52	42	07	44	38
57	60	86	32	44	09	47	27	96	54	49	17	46	09	62
18	18	07	92	46	44	17	16	58	09	79	83	86	19	62
26	62	38	97	75	84	16	07	44	99	83	11	46	32	24
23	42	40	64	74	82	97	77	77	81	07	45	32	14	08
52	36	28	19	95	50	92	26	11	97	00	56	76	31	38
37	85	94	35	12	83	39	50	08	30	42	34	07	96	88
70	29	17	12	13	40	33	20	38	26	13	89	51	03	74
56	62	18	37	35	96	83	50	87	75	97	12	25	93	47
99	49	57	22	77	88	42	95	45	72	16	64	36	16	00
16	08	15	04	72	33	27	14	34	09	45	59	34	68	49
31	16	93	32	43	50	27	89	87	19	20	15	37	00	49

INSTRUCTIONS FOR THE USE OF THE RANDOM NUMBER TABLE

1. Number the members of the lot (i.e., the drums onsite, the sections within a grid) in a numerical order.

2. Decide on the number of samples necessary. This should be a number sufficient to give statistical significant data. Ten to 20 percent is usually adequate. This number should be predetermined in the test plan or should coincide with the time and equipment available.

3. Using the set of random numbers above; choose any number as a starting point, then proceed to select the next number in any predetermined direction (i.e., down the column, across the rows) until the selection process has yielded the desired number of samples.

Example:

Soil samples are to be collected from a field 10 meters by 15 meters in area. Equipment and laboratory arrangements have been made to handle eight samples.

A. The area is divided into an imaginary 1 meter grid.

B. Each quadrant in the grid is assigned a number in a numerical order; West to East, North to South (or left to right, top to bottom).

C. Referring to the Random Number table it is arbitrarily decided to start at the first number in the third row, then proceed down the column.

This would result in the selection of 43 as the first number followed by 24, 62, 85, 56, 77, 17 and 63 as the eighth and final selection.

The grids corresponding to these numbers would then be sampled.

TABLE E-2. CONVERSION FACTORS/TABLES OF MEASUREMENT

MISCELLANEOUS

kilo —means one thousand
centi —means one-hundredth
milli —means one-thousandth
micro—means one-millionth

Length and area

1 statute mile (mi)	= 5280 feet = 1 609 kilometers
1 foot (ft)	= 12 inches = 30 48 centimeters
1 inch (in)	= 25 40 millimeters
100 ft per min	= 0 508 meter per sec
1 square foot	= 144 sq inches = 0 0929 sq meter
1 square inch	= 6 45 sq centimeters
1 kilometer (km)	= 1000 meters = 0 621 statute mile
1 meter (m)	= 100 centimeters (cm) = 1000 millimeters (mm) = 1 094 yards = 3 281 feet = 39 37 inches
1 centimeter	= 1 x 10^8 angstroms (A)
1 micron	= 0 001 millimeter = 0 000039 inch
1 meter per sec	= 196 9 ft per min

Weight

1 U S long ton	= 2240 pounds = 1016 kilograms
1 U S short ton	= 2000 pounds = 907 kilograms
1 pound (lb)	16 ounces = 7000 grains = 0 454 kilogram
1 ounce (oz)	0 0625 pound = 28 35 grams
1 kg per cu m	= 1 gram per liter = 1 part per thousand
1 g per cu m	= 1 mg per liter = 1 part per million (ppm)
1 ppm	= 8 33 lb per million gal
1 gram per gal	= 143 lb per million gal
1 lb per million gal	= 0 12 ppm
1 lb per million gal	= 0 007 grain per gallon
1 lb per thousand gal	= 120 ppm

Pressure

1 atmosphere	= 760 mm (29 92 in) mercury with density 13 595 grams per cc
1 grain	= 64 8 milligrams = 0 0023 ounce
1 pound per foot	= 1 488 kg per meter
1 metric ton (tonne)	= 1000 kilograms 0 984 long ton 1 102 U S short tons = 2205 pounds
1 kilogram (kg)	= 1000 grams = 2 205 pounds
1 gram (g)	= 1000 milligrams (mg) 0 03527 ounce = 15 43 grains
1 kg per meter	= 0 672 pound per ft

Volume

1 cubic yard	= 27 cu ft = 0 765 cu m
1 cubic foot	= 1728 cu in = 28 32 liters 7 48 U S gallons
1 cubic inch	= 16 39 cu centimeters (cu cm)
1 imperial gallon	= 277 4 cu in = 4 55 liters
1 U S gallon	0 833 imperial gallon = 3 785 liters = 231 cu in = 0 1337 cu ft
1 U S barrel (petroleum)	= 42 U S gallons 35 imperial gallons
1 cubic meter (cu m)	1000 liters = 35 31 cu ft
1 liter	1000 cc = 0 2200 imperial gallon 0 2642 U S gallon = 61 0 cu in
1 atmosphere (metric)	= 14 696 lb per sq in = 1 033 kg per sq cm 1 kg per sq cm = 10 000 kg per sq m = 10 m head of water = 14 22 lb per sq in
1 lb per square foot	= 0 1924 in of water = 4 88 kg per sq m
1 lb per square inch	= 2 036 in head of mercury = 2 309 ft head of water = 0 0703 kg per sq cm = 0 0690 bar
1 ton per square inch	= 1 406 kg per sq mm
1 inch head of water	= 5 20 lb per sq ft
1 board foot	= 12 in x 12 in x 1 in. thick = 144 cu in
1 cu ft per min	= 1 699 cu m per hour
1 cu m per hour	= 0 589 cu ft per min
1 cu ft per sec	= 646,316 gallons per day = 448 83 gallons per min
1 gallon per min	= 0 00144 million gallons per day

Density (weight/volume)

1 cu ft per lb	= 0 0624 cu m per kg
1 lb per cu ft	= 16 02 kg per cu m
1 grain per cu ft	= 2 288 grams per cu m
1 grain per U S gallon	= 17 11 grams per cu m = 17 11 mg/liter
1 cu m per kg	= 16 02 cu ft per lb
1 kg per cu m	= 0 0624 lb per cu ft
1 gram per cu m	= 0 437 grain per cu ft = 0 0584 grain per U S gallon
1 gram per cc	= 62 4 lb per cu ft
1 gram per liter	= 58 4 grains per U S gallon

Water at 62 F (16.7 C)

1 cubic foot	= 62 3 lb
1 pound	= 0 01604 cu ft
1 U S gallon	= 8 34 lb

Water at 39 2 F (4 C), maximum density

1 cubic foot	62 4 lb
1 cubic meter	= 1000 kg
1 pound	= 0 01602 cu ft
1 liter	= 1 0 kg
1 foot head of water	= 0 433 lb per sq in
1 m head of water	0 1 kg per sq cm
1 in head of mercury	= 0 491 lb per sq in
1 m head of mercury	= 1 360 kg per sq cm
1 kilogram per sq m	= 1 mm head of water = 0 2048 lb per sq ft
1 kilogram per sq cm	= 735 5 mm of mercury = 14 22 lb per sq in
1 kg per sq mm	= 0 711 ton per sq in

In these conversions, inches and feet of water are measured at 62 F (16 7 C) and limeters and meters of water at 39 2 F (4 C) and inches, millimeters and meters of mercury at 32 F (0 C).

Source: Betz Handbook of Industrial Water Conditioning, 1976 seventh edition, Betz Laboratories, Inc., Trevose, PA

U.S. Environmental Protection Agency
Region 5, Library (PL-12J)
77 West Jackson Boulevard, 12th Floor
Chicago, IL 60604-3590

☆U.S GOVERNMENT PRINTING OFFICE. 1983—659-095/0746