United States
Environmental Protection
Agency

Industrial Environmental Research
Laboratory
Cincinnati OH 45268

EPA 600/2-79-045
December 1979

Research and Development

EPA

NPDES Best Management Practices Guidance Document

RECEIVED
JUN 27 1986
UOP PROCESS
ENGINEERING DEPT.

Do not remove. This document should be retained in the EPA Region 5 Library Collection.

Environmental Protection Agency
Region V, Library
230 South Dearborn Street
Chicago, Illinois 60604

EPA-600/9-79-045
December 1979

NPDES
BEST MANAGEMENT PRACTICES
GUIDANCE DOCUMENT

by

J. G. Cleary
O. D. Ivins
G. J. Kehrberger
C. P. Ryan
C. W. Stuewe
HYDROSCIENCE, INC.
Knoxville, Tennessee 37919

Contract No. 68-03-2568

Project Officers:

Alfred B. Craig, Jr.
Industrial Pollution Control Division
Industrial Environmental Research Laboratory
Cincinnati, Ohio 45268

Harry M. Thron, Jr.
Permits Division, Office of Water Enforcement
Washington, D.C. 20460

INDUSTRIAL ENVIRONMENTAL RESEARCH LABORATORY
OFFICE OF RESEARCH AND DEVELOPMENT
U.S. ENVIRONMENTAL PROTECTION AGENCY
CINCINNATI, OHIO 45268

U.S. Environmental Protection Agency
Region V, Library
230 South Dearborn Street
Chicago, Illinois 60604

DISCLAIMER

This report has been reviewed by the Industrial Environmental Research Laboratory, U.S. Environmental Protection Agency, and approved for publication. Approval does not signify that the contents necessarily reflect the views and policies of the U.S. Environmental Protection Agency, nor does mention of trade names or commercial products constitute endorsement or recommendation for use.

U.S. Environmental Protection Agency

FOREWORD

When energy and material resources are extracted, processed, converted, and used, the related pollutional impacts on our environment and even on our health often require that new and increasingly more efficient pollution control methods be used. The Industrial Environmental Research Laboratory——Cincinnati (IERL-Ci) assists in developing and demonstrating new and improved methodologies that will meet these needs both efficiently and economically.

This document presents the results from a study of the best management practices used in industry to prevent or minimize the release of toxic and hazardous substances to the surface waters. Guidance in this document should prove useful to industry in complying with NPDES requirements and to regulatory agencies in administering the NPDES program. For further information, please contact the Metals and Inorganic Chemicals Branch in Cincinnati.

David G. Stephan

Director

Industrial Environmental Research Laboratory

Cincinnati

ABSTRACT

This guidance document was developed for the EPA for use in providing guidance to NPDES permitting authorities for evaluation of a best management practice (BMP) program for industry. BMPs are required under the 1977 Clean Water Act for the control of discharge of toxic and hazardous substances from industrial plant site runoff, spillage and leaks, sludge and waste disposal, and drainage from raw-material storage areas to receiving waters. This document provides a basis for reviewing and evaluating BMP programs, for prescribing BMP alternatives to upgrade BMP programs, and for recommending additional BMPs where necessary. Its use requires engineering experience and knowledge of industrial operations and of the BMP alternatives, as well as of the applicable current laws and regulations. The criteria that should be considered in the decision-making process relative to accepting a program or recommending revisions to a program are reviewed. Final recommendations on the acceptability of a BMP program or the prescribing of BMP alternatives based on the evaluation of a specific situation requires engineering judgment and experience.

The guidance in this document has been developed based on a review of current practices used by industry to prevent the release of toxic and hazardous substances to receiving waters. Included in the review were published articles and reports, technical bulletins on specific compounds, and discussions with industry through telephone contacts, written questionnaires, and site visits. This available information on current BMPs was evaluated, and BMPs were grouped into general categories of base line and advanced. BMPs were related to pollutant sources (ancillary sources) and physical and chemical properties of the compounds. A classification scheme was developed for the toxic and hazardous substances, based on important physical and chemical properties relevant to identification of applicable BMP alternatives. A method of identifying applicable BMPs based on chemical and source is presented.

An approach was developed to assist the document user in evaluating a BMP program and prescribing BMP alternatives. The review format involves an examination of a BMP program to assess compliance with regulations and to assess effectiveness of both base-line and advanced BMPs for prevention of significant discharges of toxic and hazardous substances to receiving waters. Methodology is presented for evaluation of the impact on the water quality of a release of material to several types of receiving water bodies.

This report was submitted by Hydroscience, Inc., in fulfillment of Contract 68-03-2568 under the sponsorship of the U.S. Environmental Protection Agency. This report covers the period June 13, 1978, to February 26, 1979.

ACKNOWLEDGMENT

The authors wish to acknowledge those who gave so generously of their time during the compilation of this document. In particular, the helpful suggestions of the following individuals are greatly appreciated: Thomas Charlton of the EPA-Office of Water Enforcement, Oil and Special Material Control Division, Washington; and Ira Wilder, John Brugger, and Joseph Lafornara, EPA-ORD, IERL, Oil and Hazardous Materials Spills Branch, Edison, New Jersey.

Our appreciation is also extended to the American Paper Institute, Manufacturing Chemists Association, National Council of the Paper Industry for Air and Stream Improvement, and National Forest Products Association for their cooperation and assistance. In particular we acknowledge the considerable contribution made by Howard Schwartzman, Chairman of the NPDES Task Force of the MCA.

We gratefully acknowledge the following companies who contributed to this study:

Allied Chemical Co.
Celanese Fibers Co.
E. I. du Pont de Nemours & Co.
Hooker Chemicals and Plastics Corp.
Procter and Gamble Co.
Shell Chemical Co.
Stauffer Chemical Co.
Union Carbide Corp.

CONTENTS

	Page
Foreword	iii
Abstract	iv
Acknowledgment	v
Figures and Tables	viii
1. Introduction	1
Background	1
Applicable laws and regulations	1
Study purpose and methodology	2
2. Conclusions and Recommendations	4
Conclusions	4
Recommendations	4
3. Best Management Practices	7
Ancillary sources	7
Definition of BMPs	8
Data base	8
Base-line best management practices	9
Advanced best management practices	20
4. Classification of Toxic and Hazardous Substances	41
Introduction	41
Chemical group definitions	42
Classifications	46
5. Methods for Evaluating BMP Programs and Prescribing BMP Alternatives	56
Evaluation of a BMP program	56
Prescribing BMP alternatives	75
Appendices	
Appendix A. Literature Surveyed and Industrial Contacts Made	90
Appendix B. BMP Keyword Summary	105
Appendix C. BMPs for Specific Toxic and Hazardous Chemicals	107
Appendix D. Summary of Industrial Survey	115
Appendix E. Analytical Mathematical Solutions	164
Glossary	167

FIGURES

Number		
1	Decision Tree for BMP Program Evaluation	58
2	Spatial Concentration	81
3	Temporal Concentration Distribution at Various Distances	82
4	Example of Toxicity Data	86
5	Example of Calculating Percent Survival	88

TABLES

Number		Page
1	Advanced-BMP Alternatives	21
2	Chemical Group Classifications	43
3	Liquid Group Classification	47
4	Solids Group Classification	50
5	Gases Group Classification	55
6	Questions and Decision Aids Relative to Decision Tree Shown in Fig. 1	59
7	Minimum Requirements of a BMP Program	60
8	Advanced-BMP Alternatives	67
9	Example 1	69
10	Example 2	70

SECTION 1

INTRODUCTION

BACKGROUND

This study was undertaken to provide the National Pollutant Discharge Elimination System (NPDES) permitting authorities with a protocol for evaluating the best management practice(s) [BMP(s)] for industry in controlling discharges of toxic and hazardous substances to receiving waters. Under Section 304(e) of the 1977 Clean Water Act (the Act), the Administrator may publish regulations to control the discharge of toxic or "priority pollutants" (149)* and hazardous pollutants (20) from the following sources: plant- site runoff, spillage or leaks, sludge or waste disposal, and drainage from raw-material storage areas. Best management practices are the most practical and effective measures or combinations of measures which, when applied to an industrial activity, will prevent or minimize the potential for release of toxic and hazardous pollutants in significant amounts to surface waters from the sources cited above. These potential sources of toxic and hazardous pollutants are defined as those associated with or ancillary to the industrial manufacturing or treatment process that may contribute significant amounts of such pollutants to navigable waters.

APPLICABLE LAWS AND REGULATIONS

Pursuant to Section 311 of the Act, the Environmental Protection Agency has proposed (40 CFR Part 151) requirements for spill prevention control and countermeasure (SPCC) plans to prevent discharges of hazardous substances from facilities subject to NPDES permitting requirements. The guidelines proposed for SPCC are very similar to those developed and used in the oil prevention regulation, 40 CFR, Part 112.

Criteria and standards for imposing BMPs for ancillary industrial activities pursuant to Section 402 of the Act (40 CFR, Part 125, Subpart K) revise the existing regulations governing the NPDES in order to reflect new controls on toxic and hazardous pollutants under the Act. The proposed regulation indicates how BMPs for on-site industrial activities may be imposed in NPDES

*See Appendix A for references indicated by numbers in parentheses throughout the text of this report.

permits to prevent the release of toxic and hazardous pollutants to surface waters.

The NPDES regulations (40 CFR, Part 125, Subpart K) require that those who must obtain an NPDES permit and who use, produce, or discharge any of the toxic and hazardous pollutants cited in ref. 149 or listed in Appendix A must develop a BMP program. Paragraph 125.104(b)(4)(iii) of the NPDES regulations published in the June 7, 1979 Federal Register (44FR32954) directs readers to this BMP guidance document for additional technical information on BMPs and the elements of a BMP program. The BMP program will be documented and submitted as part of an NPDES permit application. The BMP program will include a specific objective for the control of toxic and hazardous substances and BMPs that will facilitate implementation of that objective. The program will also cover the following activities: liquid and raw-material storage areas; plant-site runoff; truck and railcar loading and unloading areas; in-plant transfer, process, and material handling areas; preventive maintenance and housekeeping; release of rainwater from diked or other drainage areas; management of solid and hazardous waste; materials handling; and BMP-related employee training.

STUDY PURPOSE AND METHODOLOGY

Tasks

Based on Section 304(e) of the 1977 Act and the proposed rule for criteria and standards for imposing best management practices (40 CFR, Part 125), the Environmental Protection Agency initiated work to develop a BMP guidance document for use by NPDES permitting authorities. The purposes of this study were to provide a list of BMPs currently used by industry to control the discharge of toxic and hazardous substances and to develop the criteria required by permitting authorities to evaluate a BMP program. The work included the following major tasks:

- an extensive literature review,
- site visits and personal contacts with industry to evaluate and document existing BMPs,
- grouping the toxic and hazardous substances into a manageable number of categories so that existing BMPs could be applied,
- developing the criteria required for evaluation of the BMP program.

Methodology

The toxic and hazardous substances were classified according to their physical state at normal temperatures and pressures [20 to 25°C and 1 X 10^5 Pa (1 atm)]. The substances were further categorized as to their chemical and biological properities, such as toxicity to humans, flammability, corrosiveness, reactivity, solubility, biodegradeability, and toxicity to aquatic life.

The known existing applicable BMPs are divided into two groups: base line and advanced. Base-line BMPs are defined as those management practices

generally considered to be good practices that are low in cost and are applicable to broad categories of industry and types of substances. The practices are independent of the type of industry, ancillary source, specific chemical, group of chemicals, or plant-site locations. Advanced BMPs are defined as those best management practices specific to groups of toxic and hazardous substances and related to one or more ancillary source. The advanced BMPs are divided into four general categories: prevention, containment, mitigation, and ultimate disposition. The ancillary sources considered for the advanced BMPs are material storage areas; in-plant transfer, process, and materials handling areas; loading and unloading areas; plant-site runoff; and sludge and hazardous-material disposal areas.

The criteria developed for evaluating BMP programs were based on acceptable base-line BMPs, advanced BMPs, and the potential impact on the environment. A method is presented relating applicable BMP alternatives to the toxic and hazardous substances and to the ancillary sources. A check list in the form of questions is provided for base-line and advanced BMPs to assist in the evaluation of a BMP program.

Base-line BMPs are applicable to all industrial activities and can be incorporated into a BMP program as a minimum requirement. Advanced BMPs, however, will be controlled by such specific factors as the site location, the topography, the age of the plant, the engineering design, the company's safety and spill programs, and the location of toxic and hazardous materials. To provide the guidance needed to evaluate a BMP program a list of alternative advanced BMPs was developed based on the specific ancillary source, the chemical's physical state, and the chemical's characteristics.

The water quality impact evaluated for a spill will influence the degree and level of management practices recommended for a specific case. Methodology is presented to provide guidance in that evaluation. Relatively simple mathematical analytical solutions are given for streams and estuaries that illustrate the techniques that should be considered in the evaluation of a BMP program. The criteria to be used in the evaluation of an impact analysis presented in a BMP program are also included in the form of a check list.

SECTION 2

CONCLUSIONS AND RECOMMENDATIONS

The following conclusions and recommendations are based on a review of the available data on BMPs and on a study of the relationships between the ancillary sources, the toxic and hazardous substances, the specific industrial practices, and the applicable regulations.

CONCLUSIONS

BMPs, those used by industry for preventing spills of material to receiving water, are essentially the same traditional practices used by industry for pollution control, safety, industrial hygiene, fire protection, protection against loss of product, insurance company requirements, and public relations.

BMPs are related to the source (ancillary source) of the spilled material and to groups of toxic and hazardous compounds with similar physical and chemical characteristics rather than to specific compounds.

The toxic (priority pollutants) and hazardous substances lists are combined into a single list of 302 materials, which eliminated the duplication of compounds on both lists. These compounds are classified by physical state (solid, liquid, gas) at normal temperatures and pressures and by chemical groupings with similar physical and chemical properties relevant to identification with applicable BMPs.

BMPs can be grouped into two general categories: base line and advanced. Base-line BMPs are those practices that are generally applicable to all industries, are relatively low in cost, and are independent of chemical compound, ancillary source, and industrial facility location. Advanced BMPs are those practices that provide an additional level of protection in preventing spills and are specific to groups of toxic and hazardous substances and to one or more ancillary source.

Base-line BMPs are applicable to all industrial activities and can be incorporated into a BMP program as a minimum requirement. Advanced BMPs, however, will be controlled by such specific factors as the site location, the topography, the age of the plant, the engineering design, the company's safety and

spill programs, and the location of toxic and hazardous materials. A list of alternative advanced BMPs that were developed based on the specific ancillary source, the material's physical state, and its chemical group classification can be used as guidance in evaluating a BMP program.

Advanced BMPs can be grouped into general categories of prevention, containment, mitigation, and ultimate disposition. Prevention and containment BMPs are used to prevent a spill from occurring and to contain a spill, precluding loss to a receiving water. Mitigation and ultimate disposition BMPs are associated with cleanup, treatment, and ultimate disposition of a material after it has been released from its primary location.

With few exceptions, all the liquids, independent of chemical grouping, can be handled by the same advanced BMPs. Also, in general all dry chemicals are handled by the same group of BMPs, with some exceptions. The BMP categories of prevention, containment, and mitigation-treatment can be applied to gases; however, mitigation-cleanup and ultimate disposition may not be applicable to gases.

In developing or reviewing a BMP program the primary criteria include the history and/or possibility of spill incidents at the site, the potential impact of a spill on the water quality, and the effectiveness and costs of the BMPs.

Costs to implement a base-line BMP program vary with the size and complexity of the facility but are relatively independent of the specific plant location.

Costs to implement advanced BMPs are specific to site and situation; thus it is not possible to assign general costs to advanced BMPs independent of their evaluation and implementation at a defined installation. Costs to implement various BMPs at different plant sites can vary considerably. Therefore in the evaluation of BMP programs for cost effectiveness and potential impact, each specific case may require that several iterative steps be taken in the overall process of prescribing BMPs, that estimated costs be developed, that the probability of incidents be determined, and that the potential impact on receiving waters be determined before final recommendations are made on the implementation of specific BMPs or BMP programs.

The selection of an advanced BMP program can depend in part on the impact of the spilled material on the receiving water. Appropriate mathematical modeling techniques are available to define the concentration of a toxic and hazardous material in a receiving water resulting from unexpected spills. The impact that the material may have on the water quality can only be assessed, by comparing the calculated concentration with appropriate water quality criteria. Water quality criteria are required for the toxic and hazardous substances and should be based on human and aquatic toxicity.

RECOMMENDATIONS

This document should be used for guidance in developing BMP programs; however, its limitations with respect to site-specific conditions should be recognized and considered in an evaluation of a BMP program.

Exemplary BMP programs instituted by many major industries and information and details on the programs should be used to supplement the guidance information contained herein. References containing this information are included in Appendix A.

Personnel of the NPDES authorities assigned to the task of reviewing and prescribing BMP programs should be trained engineers with sufficient knowledge and experience to properly assess the specific conditions of a site and to relate them properly to the guidance and criteria presented herein for review of BMP programs.

Training sessions are recommended in which the permitting authority personnel will be instructed in the proper use of this guidance document and the relationship of BMPs to other requirements under the Clean Water Act, Toxic Substances Control Act, Spill Prevention Control and Countermeasure Plans, Resource Conservation and Recovery Act, Occupational Safety and Health Act, and other applicable laws and regulations.

To provide more objective bases for evaluating BMP programs, additional information should be generated through further development of the following:

- Water quality criteria for toxic and hazardous substances based on human and aquatic toxicity levels.
- Probability of and risks involved in spills associated with industrial manufacturing operations and the degree of risk reduction by implementation of specific BMPs.

SECTION 3

BEST MANAGEMENT PRACTICES

This chapter discusses BMPs that can be utilized to prevent or reduce the release of toxic and hazardous substances to the environment. The primary sources of toxic and hazardous pollutants to be controlled by BMPs are plant site runoff, spillage or leaks, sludge or waste disposal, and drainage from raw-material storage, which are associated with or ancillary to the industrial manufacturing or treatment process. The ancillary sources include but are not limited to ancillary manufacturing operations, material storage, material handling, and waste treatment and disposal.

ANCILLARY SOURCES

The ancillary sources are divided for discussion in this report into five categories: material storage areas; in-plant transfer areas, process areas, and material handling areas; loading and unloading areas; plant site runoff; and sludge and hazardous-waste disposal sites.

Material storage areas include storage areas for toxic and hazardous chemicals as raw materials, intermediates, or final products. Included are liquid storage vessels that range in size from large tanks located at a tank farm to 55-gal drums, storage of dry chemicals in bags, tanks, bins, silos, boxes, and stockpiles for storage of any chemicals tanks and vessels for storage of gaseous materials.

In-plant transfer areas, process areas, and material handling areas encompass all in-plant transfer operations from raw material to final product. Various operations could include transfer of liquids or gases by pipelines with appurtenances such as pumps, valves and fittings, movement of bulk materials by mechanical conveyor-belt systems, and fork-lift truck transport of bags, drums, and bins. All process area operations with a potential for release of toxic and hazardous substances to other than the process waste water system are addressed in this grouping.

Loading and unloading operations involve only the transfer of materials to and from trucks or railcars but not in-plant transfers. These operations include pumping of liquids or gases from truck or railcar to a storage facility or vice versa, pneumatic transfer of dry chemicals to or from the

loading or unloading vehicle, transfer by mechanical conveyor systems, and transfer of bags, boxes, and drums from vehicles by fork-lift trucks.

Plant runoff is generated from rainfall on a plant site. Runoff from material storage areas, in-plant areas, loading and unloading areas, and sludge disposal sites potentially could become contaminated with toxic and hazardous substances. Heavy metal pollutants from sludge disposal sites are of special concern. Fallout from air emissions settling on the plant site may also become a source of contaminated runoff. Contaminated runoff may reach a receiving body of water through overland flow, drainage ditches, storm or clean cooling water sewers, or overflows from combined sewer systems.

Sludge and hazardous-waste disposal areas are sources of potential contamination of receiving waters. The operations include landfills, pits, ponds, lagoons, and deep-well injection sites. Depending on the construction and operation of these sites there may be an existing potential for leachates containing hazardous materials to seep into the ground water or for liquids to overflow to surface waters from these disposal operations.

DEFINITION OF BMPs

The BMPs are divided into categories of base-line and advanced. Base-line BMPs are defined as those management practices generally considered to be good practices that are low in cost and are applicable to broad categories of industry and types of substances. Within these broad categories base-line BMPs are independent of the type of industry, ancillary source, specific chemical or group of chemicals, and physical site conditions such as land area and topography. Advanced BMPs are defined as those best management practices specific to groups of toxic and hazardous substances and related to one or more ancillary sources.

DATA BASE

The data and information compiled and evaluated during this study were generated from an extensive literature review, from telephone inquiries of industrial companies and from plant visits. The literature review consisted of a review of 161 articles and reports, including conference proceedings, and, a review of various trade association publications and technical bulletins. The OHM-TADS (Oil and Hazardous Materials—— Technical Assistance Data System) and the Lockheed Data Retrieval System were utilized for conducting a computer search for pertinent information and reports. The latter was used to perform a literature search using key words to identify additional articles and reports for review. The references are given in Appendix A. A tabulation of BMP keywords, with the corresponding literature or site source, is presented in Appendix B.

To supplement the literature data collected, several industries were contacted, either by a site visit or discussion by telephone, to obtain information on their programs of best management practices. On-site visits were made to Hooker Chemical Co., Niagara Falls, New York; Procter and Gamble, Engineering Office, Cincinnati, Ohio; and Allied Chemical, Hopewell, Virginia. The intent of these visits and telephone contacts was to verify and amplify information obtained from the literature and was not meant to be an all-inclusive survey of each company's practices.

Telephone contacts were made to several companies. A general guestionnaire was sent to each company from Hydroscience through the Manufacturing Chemists Association (MCA). Followup telephone contacts were then made to each company to discuss the questionnaire, and, when requested, specific questionnaires were sent. Then telephone conversations were held with each company to obtain additional verbal responses to specific questions. The purpose of these conversations was to identify base-line BMPs used by industry and specific BMPs used for specific compounds or groups of compounds. Summaries of the telephone contacts and copies of the written responses are given in Appendix D.

Information generated from the telephone conversations indicated that BMPs are utilized by industry for many reasons, including safety programs, fire protection, and protection against loss of product in addition to protection from spills to surface waters. Relative to prevention and containment practices, it was found that, in general, all liquids as a group are subjected to the same BMPs rather than each chemical or groups of chemicals being subjected to specific BMPs.

BASE-LINE BEST MANAGEMENT PRACTICES

The base-line BMPs, as well as most of the advanced BMPs, are essentially the same practices used by industry for pollution control, for SPCC plans for oil and hazardous materials, for Occupational Safety and Health Act (OSHA) programs, for fire protection, for protection against loss of valuable raw materials or products, and for insurance policy requirements. The BMPs listed below can be included in BMP programs for all industrial sites independent of the nature of the toxic and hazardous chemicals, the ancillary sources, or plant location: Spill Control Committee, spill reporting, material inventory, employee training, visual inspection, preventive maintenance, good housekeeping, materials compatability, security. These BMPs require personnel commitments and procedural actions and are therefore relatively low in cost compared to advanced BMPs.

Spill Control Committee

The Spill Control Committee would be responsible for implementing and maintaining a BMP program and would function similarly to a fire prevention or safety committee. Responsibility and authority would be assigned by management for carrying out management policy and achieving BMP program objectives. Resources and manpower would be assigned as required. Although the group is conveniently termed the "Spill Control Committee," its scope should include all aspects of the facility's BMP program. The Committee may typically include employees from production, engineering, research and development, and waste treatment. The size and diversity of personnel on the committee would reflect the size and complexity of the plant and the chemicals under consideration. Authority and responsibility for immediate action in the event of a spill would be clearly established and documented in the BMP program, with the committee possibly directly or indirectly involved in that responsibility. The committee should advise management on the technical aspects of environmental incident control but should not impede the decision-making process for preventing or mitigating spills and incidents.

The main responsibilities of the committee could include identification of toxic and hazardous materials handled (materials inventory), identification of potential spill sources, establishment of spill reporting procedures and visual inspections programs, review of past incidents of spills and countermeasures utilized, coordination of all departments in carrying out goals of a BMP program, coordination of the activities for spill cleanup, notification to authorities, and establishment of training and education programs for plant personnel. A spill control committee would have overall responsibility for the BMP program, for reviewing and evaluating the BMP program, and for instituting appropriate changes at regular meetings. The committee could also be responsible for the necessary review of new construction and process changes at a facility relative to spill prevention and control. The committee should also evaluate the effectiveness of the overall BMP program and make recommendations to management in support of corporate policy on BMP-related matters.

Spill Reporting

A spill reporting system is used to keep records of spills for the purpose of minimizing recurrence, expediting mitigation or cleanup activities, and complying with legal requirements. Spill reporting procedures that could be defined by the committee include notification of a spill to appropriate plant personnel to initiate immediate action, formal written reports for review and evaluation of spills and revisions to the BMP program, and notification as required by law to governmental and environmental agencies in the event that a spill reaches the surface water.

The spill reporting system would designate the avenues of reporting and the responsible company and government officials to whom the incidents would be

reported. A list of the names, office telephone extensions, and residence telephone numbers of key employees in the order of responsibility would be utilized for immediate reporting of spills and incidents for implementation of emergency response plans.

A communications system would be designated and available for notification of an impending potential or actual spill. Reliable communications with the person or persons directly responsible would expedite immediate action and countermeasures to prevent spills if possible, and if not, to contain them and to clean up after a spill. Such a communication system could include telephone or radio contact between various sections of the plant, direct audible or code signals between transfer operations, and alarm systems that would signal the location of a spill.

Formal written reports on all spills or other BMP-related incidents would be submitted to the plant's Spill Control Committee for review. Written reports would include the date and time of the spill, weather conditions, nature of the materials involved, duration, spill volume, cause, environmental problems, countermeasures taken, people and agencies notified, and recommended revisions of the BMP program, operating procedures and/or equipment to prevent recurrence.

A procedure would be defined for notifying the U.S. Coast Guard and federal, state, and local regulatory agencies of all spills. The individuals responsible for contacting the agencies and a list of their telephone numbers would be included in the BMP program. In addition, municipal sewage authorities, public water utilities, other industrial water users, and water recreation areas would be listed for notification, if applicable.

Material Inventory System

A material inventory system would involve the identification of all sources and quantities of toxic and hazardous materials handled or produced at a particular site. The sources of the toxic and hazardous materials should be clearly indicated on plant drawings and plot plans, along with the quantity of materials used. A simplified materials flowsheet showing major process operations can be used to indicate the direction and quantity of flow of materials from one area to another. The direction of flow of potential major spills could also be estimated based on site topography and indicated on the plant site drawings. A material inventory system would also include physical, chemical, toxicological, and health information (e.g., technical bulletins or safety data sheets) on the toxic and hazardous substances handled; the quantities involved in various operations or ancillary sources; and the prevention, containment, mitigation, and ultimate disposition techniques that are used or would be used in the event of a spill.

The inventory would serve to identify those materials that might be released and allow for an assessment of the potential water quality impact. The

inventory and the assessment or risk evaluation can be used to identify those areas requiring BMPs for spill control.

New materials planned for use should be investigated for safety and handling hazards, biodegradeability, aquatic and human toxicity, and applicable alternatives for spill prevention, containment, mitigation, and ultimate disposition. As appropriate, testing of new materials, intermediates or products should be required to provide the information necessary for assessing the potential impacts and needed BMPs before their introduction into the plant manufacturing processes. This information would be incorporated into the materials inventory system and the BMP program revised as required.

Employee Training

Employee training programs are used to instill in personnel, at all levels of responsibility, a complete understanding of the BMP program, the processes and materials with which they are working, the safety hazards, the practices for preventing spills, and the procedures for responding properly and rapidly to spills of toxic and hazardous materials. Employee training meetings should be carried out frequently enough to assure adequate understanding of the goals and objectives of the BMP program and the individual responsibilities of each employee. Typically, these meetings could be a part of routine employee meetings for safety and/or fire protection. Such meetings would be directed to highlighting known spill events or failures, malfunctioning components, and recently developed precautionary measures and to reviewing the BMP program and procedures used to control toxic and hazardous materials. Just as fire drills are used to evaluate an employee's reaction to a fire emergency, spill or environmental incident drills may serve to evaluate the employee's knowledge of BMP-related procedures.

Of particular importance would be the strong commitment and periodic input from top management to the employee training program to create the necessary climate of concern required for a successful program. A plant manager or visiting vice-president might accomplish more in a brief, face-to-face, appearance than an elaborate, impersonal training program would accomplish.

Adequate training in a particular job and process operation and its effect on other operations is essential for understanding potential spill problems. Knowledge of specific manufacturing operations and how spills could occur, or have occurred in the past, is important in reducing human error or process upsets that can lead to spills.

The training program would also be aimed at making employees aware of the protocol used to report spills and notify the people responsible for spill response so that immediate countermeasures could be initiated. In addition, personnel involved in spill response would be trained in how to use spill cleanup materials such as sorbents, gelling agents, foams, and neutralizing agents. They would be educated in safety precautions, in the side effects

of the chemicals they are working with, and in possible chemical reactions. Operating manuals and standard procedures for process operations would include appropriate sections on the BMP program and the spill control program and would be readily available for reference as needed. Spill response drills, suggestion boxes, and posters can be used to motivate employees to be alert to the potentiality of spills and to their prevention.

Visual Inspection

Visual inspection consists of touring or patrolling the plant facilities to detect spills or evidence of potential spills or other conditions that could lead to an environmental incident. There are two types of visual inspection: routine and detailed.

Routine visual inspections can be performed by plant security personnel and may include visual observations of storage facilities, transfer pipelines, and loading and unloading areas for detection of leaks and spills. The personnel could make these observations from a vehicle or on foot while patrolling the plant and could be conducted especially during periods of low production, such as night shifts or weekends.

Detailed inspections relate to specific areas of the plant and should be made by plant personnel responsible for the individual processes and/or plants. During normal plant operations these inspections would include examination for pipe and pump leaks, tank corrosion, windblowing of dry chemicals, deterioration of supports or foundations, stains on walls, stains along drainage ditches and old tanks, and other forms of deterioration of primary or secondary containment facilities. They could also be utilized to evaluate the need for preventive maintenance and the adequacy of good housekeeping, which are other base-line BMPs. The frequency of inspection should be determined by the chemical, the age of the facility, the additional BMPs utilized such as those for containment, and the potential impact of a loss. It has been reported in the literature that some companies inspect the exterior of their bulk storage tanks monthly (26, 53) and inspected the tank foundations (26) every six months.

A comprehensive visual inspection program would include both routine and detailed inspections. Potential spill problems would be reported to the Spill Control Committee for review. Visual inspection program considerations relative to each of the ancillary sources are discussed below.

Raw-material storage areas for dry chemicals would be inspected for evidence of or the potentiality for windblowing of materials to other areas and possibly to a receiving body of water or for evidence of the buildup of solids on the ground due to poor housekeeping. Liquid storage areas would be inspected for leaks in or corrosion of tanks, for deterioration of foundations and/or supports, and for closure of drain valves in containment facilities. Inspection could include an examination of seams, rivets, nozzle connections, valves, and pipelines directly connected to a tank. Internal examination or

inspection of storage tanks would involve evidence of corrosion, pitting, cracks, abnormalities, and deformation and such evidence would then be evaluated.

For in-plant transfer and materials handling of liquids visual inspections would provide evidence of leaks, splits, cracks, bulges, corrosion, and deterioration of pipelines, pumps, valves, seals, and fittings. The general condition of such items as flange and expansion joints, pipeline supports, locking valves, catch or drip pans, and metal surfaces would be assessed. The frequency of inspections would be similar to that for material storage areas and be a function of the potential impact of a spill. For in-plant transfer and materials handling of solids visual inspections would focus on leaks of dry chemicals from conveying systems, windblowing of dry chemicals, damage to packaged containers and drums by transfer operations, and good housekeeping practices used in the plant.

For loading and unloading operations visual inspections during transfer of hazardous chemicals would permit immediate response if a spill occurred. The conditions of pipelines, pumps, valves, and fittings for liquid transfer systems and pneumatic conveying systems used for transferring dry chemicals would be inspected. Visual inspections together with monitoring would be used to ensure that the transfer of material is complete before flexible or fixed transfer lines are disconnected prior to vehicular departure. Before any tank car or tank truck is filled, the lower-most drain valve and all outlets of such vehicles would be closely examined for evidence of leakage and, if necessary, tightened, adjusted, or replaced. Before departure, all tank cars or tank trucks would be closely examined to ensure that all transfer lines were disconnected and that there is no evidence of leakage from any outlet.

For plant runoff visual inspections would be used for examining the integrity of the stormwater collection system and diversion or overflow structures and for ensuring that drain valves and pumps for diked areas are properly closed. Any liquid, including rainwater, from these diked areas would be analyzed before release to a receiving water.

For sludge and hazardous waste disposal sites visual inspections would include examinations for leaks, seepage, and overflows from land disposal sites such as pits, ponds, lagoons, and landfills. Visual inspections would also identify the need for preventive maintenance and the adequacy of good housekeeping.

Preventive Maintenance

Preventive maintenance (PM) involves inspection of plant equipment and systems to uncover conditions that could cause production breakdowns, harmful depreciation, or environmental insult and correction of those conditions by adjustment, repair, or replacement of worn parts before the equipment or system failed. Preventive or precautionary maintenance has been practiced

predominantly in those industries where excessive downtime is extremely costly. As a BMP, PM would be practiced selectively to eliminate or minimize spills of hazardous or toxic substances to receiving waters. In practice the preventive maintenance BMP for many facilities would be an extension of the current plant PM program.

Elements of a good PM program relative to BMPs include the following: (1) identification of equipment or systems to which the PM program should apply by analysis for potential failures and spills and for spill impact; (2) periodic inspections of identified equipment and systems, which would overlap the visual inspection BMP; (3) periodic testing of such equipment and systems, which might include vibration analysis, ultrasonic testing, thermography, detection of flaws or cracks with penetrants or optical systems, and verification of calibration for environmental monitoring systems and would overlap the nondestructive testing BMP; (4) appropriate adjustment, repair, or replacement of parts; and (5) maintenance of complete PM records on the applicable equipment and systems.

Good Housekeeping

Good housekeeping is essentially the maintenance of a clean and orderly work environment. A clean and orderly work area reduces the possibility of accidental spills caused by mishandling of equipment and should reduce safety hazards to plant personnel. Examples of good housekeeping include neat and orderly storage of chemicals; prompt removal of small spillage; regular garbage and rubbish pickup and disposal; maintenance of dry and clean floors by use of brooms, vacuum cleaners, or cleaning machines; and provisions for storage of containers or drums to keep them from protruding into open walkways or pathways. Dry chemicals would be swept or cleaned up to prevent possible washdown to drainage ditches or windblowing to other areas of the plant, and small liquid accumulations on the ground or on a floor in a building would be cleaned up to prevent further transport to other areas and possibly into a receiving water.

Maintaining employee interest in good housekeeping is a vital part of the program. Methods for maintaining good housekeeping goals could include regular housekeeping inspections by supervisors and higher management; discussions of housekeeping at meetings; and publicity through posters, suggestion boxes, bulletin boards, and employee publications.

Materials Compatability

Materials compatibility encompasses three aspects: compatibility of the contents with the materials of construction of the container, compatibility of different chemicals upon mixing such as in a landfill or in a container,

and compatibility of the container with its environment. The BMP would provide procedures such that the applicable aspects of materials compatibility are adequately covered in the design and operation of all equipment handling toxic and hazardous materials.

The selection of proper materials of construction typically would be considered in the engineering design of a facility by personnel having expertise in materials engineering. A successful materials compatability program requires a materials engineering study. Before changes are made in raw materials, process operations, or products, for which the materials of construction were originally selected, they would be studied to determine whether the materials of the tanks, pipelines, etc., are adequate for the new conditions. Periodically, the physical and chemical properties of the chemicals being handled at a particular site would be reviewed for compatibility with the materials of construction. In conjunction with this review visual inspection, testing, and preventive maintenance programs would also be reviewed to identify historical, materials-engineering performance data.

Compatibility of different chemicals upon mixing is defined as the absence of any significant physical or chemical effects. Mixing two or more chemicals that are incompatible could result in an exothermic reaction, fire, explosion, and possible release of noxious or lethal vapors. Situations involving the mixing of chemicals would be reviewed by personnel having expertise in reaction chemistry before such mixing is authorized by management. Testing for compatibility, which is common in complex situations, may be required. Ultimate disposal of chemical wastes in a landfill is an example of storage of incompatible wastes. Proper inventorying and labeling of locations of hazardous chemical disposal sites in a landfill would be followed to prevent the mixture of incompatible wastes. Thorough cleaning of storage vessels and equipment before being used for another chemical would be standard practice to ensure that there is no residual of a chemical that is incompatible with the second, or later, chemical to be used.

Consideration of the compatibility of a container with its environment, such as a buried storage tank or pipeline, would be similar to the selection of the proper materials of construction for compatibility with the contents. As an example various means of protecting a buried pipeline or storage tank from corrosion would be considered such as coatings or cathodic protection.

Security

A security system would be used to prevent accidental or intentional entry to a facility that could possibly cause a chemical release. Protection measures against vandalism, theft, sabotage, or other improper and illegal use of plant facilities include routine patrol of the plant by security guards in vehicles or on foot; fencing to prevent intruders from entering the plant site; good lighting; vehicular traffic control; a guardhouse or main entrance gate, where all visitors are required to sign in and obtain a visitor's pass; secure or locked entrances to the plant; drain valves and

pumps for chemical storage tanks, and loading and unloading facilities; and television monitoring of areas of the plant most susceptible to a spill. Many of these measures are used routinely by industries to prevent theft and vandalism, with the major concern being property damage and/or product or equipment loss. These measures have the additional benefit of protecting the plant site from potential release of hazardous chemicals to the environment.

Security personnel can be instructed to observe leaks from tanks, valves, or pipelines while patrolling the plant and can also be instructed on the procedures to follow when a spill is detected. The security patrols are an integral part of the best management practice of visual inspection programs since security personnel are normally available throughout the day to perform visual inspections to identify spills or other potential environmental incidents as they conduct routine plant patrols.

Summary

In summary, the important aspects of each base-line BMP include the following:

Spill Control Committee

- Responsibility and authority defined by management.
- Assignment of resources and manpower to the Committee.
- Inclusion of representatives from production, engineering, research and development, and waste treatment.
- Responsibility for materials inventory.
- Responsibility for identifying potential spill sources.
- Establishment of spill reporting procedures and visual inspection programs.
- Review of past incidents of spills.
- Coordination of all departments in carrying out goals of the BMP program.
- Establishment of employee training programs.
- Responsibility for BMP program implementation and subsequent review and updating.
- Responsibility for meetings on the BMP program.
- Review of new construction and process changes relative to spill prevention and control.

Spill Reporting

- Maintenance of records of spills through formal reports for internal review.
- Notification as required by law to governmental and environmental agencies should a spill reach the receiving water.
- Procedures for notifying the appropriate plant personnel.

- Identification of responsibile company and government officials.
- A list of names, office telephone extensions, and residence telephone numbers of key personnel.
- A communication system for reporting spills in-plant (i.e., telephone, alarms, radio, etc.).

Materials Inventory System

- Identification of all sources and quantities of toxic and hazardous substances handled or produced.
- Plant drawings and plot plans with sources clearly labeled.
- A simplified materials flow diagram.
- Physical, chemical, toxicological, and health information on the toxic and hazardous chemicals on-site.
- Investigation and evaluation of new materials relative to spill prevention and control.

Employee Training

- Meetings held at intervals frequent enough to assure adequate understanding of program goals and objectives.
- Spill drills.
- Periodic input from management.
- Adequate training in particular job and process operation and the effect on other operations.
- Transmission of knowledge of past spills and causes.
- Making employees aware of BMP program and spill reporting procedures.
- Training in the use of cleanup measures for spills of sorbents, gelling agents, foams, and neutralizing agents.
- Operating manuals and standard procedures.
- Review and interface with safety program on associated health risks of chemicals handled.
- Motivating employees concerning spill prevention and control.

Visual Inspections

- Routine inspections with visual observations of

  storage facilities,
  transfer pipelines,
  loading and unloading areas.

- Detailed inspections of

  pipes, pumps, valves, and fittings,
  tank corrosion (internal and external),
  windblowing of dry chemicals,
  tank support or foundation deterioration,
  stains on walls,

stains along drainage ditches and old tanks,
deterioration of primary or secondary containment,
housekeeping,
drain valves on tanks,
damage to shipping containers,
conveying systems for dry chemicals,
integrity of stormwater collection system,
leaks, seepage, and overflows from sludge and various waste disposal sites.

Preventive Maintenance

- Identification of equipment and systems to which the PM program should apply.
- Periodic inspections of identified equipment and systems.
- Periodic testing of such equipment and systems.
- Appropriate adjustment, repair, or replacement of parts.
- Maintenance of complete PM records on the applicable equipment and systems.

Good Housekeeping

- Neat and orderly storage of chemicals.
- Prompt removal of small spillage.
- Regular garbage and rubbish pickup and disposal.
- Maintenance of dry and clean floors by use of brooms, vacuum cleaners, etc.
- Proper pathways and walkways and no containers and drums that protrude onto walkways.
- Minimum accumulation of liquid and solid chemicals on the ground or floor in a building.
- Stimulation of employee interest in good housekeeping.

Materials Compatibility

- Evaluation of process changes or revisions for materials compatability.
- Periodic review of properties of chemicals handled to ensure compatibility with materials of construction.
- Evaluation of means of disposing of chemicals and of possible incompatibility with other chemicals present.
- Cleansing of vessels and transfer lines before they are used for another chemical.
- Use of proper coatings and cathodic protection on buried pipelines if required to prevent failure due to external corrosion.

Security

- Routine patrols of plant by security personnel.
- Fencing.
- Good lighting.
- Vehicular traffic control.
- Controlled access with guardhouse or main entrance gate.
- Visitor passes.
- Locked entrances.
- Locks on drain valves and pumps for chemical storage tanks.
- Television monitoring.

ADVANCED BEST MANAGEMENT PRACTICES

The advanced BMPs are methods or means to be used in addition to the base-line BMPs and are specific to groups of chemical substances and one or more of the ancillary sources. The advanced BMPs have been divided into the four main categories of prevention, containment, mitigation, and ultimate disposition. Prevention BMPs are those practices beyond the base-line BMPs that provide additional protection against releases. Nondestructive testing is an example of a prevention BMP that is more effective than the base-line BMP of visual inspection. Visual inspections normally would not allow a structural weakness in a tank to be identified before there is evidence of failure or severe corrosion. Nondestructive testing might provide warning, through measurements of tank wall thickness, of impending failure.

Containment BMPs are the physical structures or collection equipment used to confine a release of material after it escaped from its primary location or containment. Dikes surrounding material storage tanks are the most common example of containment.

Mitigation is the cleanup or treatment of a substance after it has spilled. Mitigation is used to separate a substance for recovery or to reduce the potential impact of a spill before ultimate disposition of the substance. Sorbents, gelling agents, and treatment processes such as carbon adsorption and biological treatment are considered to be effective mitigation methods.

Ultimate disposition is the final step in the overall handling of a substance that is released from its original location. Examples of ultimate disposition include landfills, surface impoundments, and ocean disposal. Environmental regulations may make one disposition method preferable over another or, in some cases, may preclude an ultimate disposition method altogether.

Each advanced BMP is discussed for its applicability to the various ancillary sources. The material storage areas, in-plant transfer areas, process areas, material handling areas, and loading and unloading areas are discussed as one group of ancillary sources since most of the BMPs for them are essentially the same and are generally applicable. These ancillary sources

release substances to the environment in similar ways, such as through leaks from tanks, pumps, valves, or pipelines or through windblowing of dry chemicals from storage and handling operations. BMPs used for potential spills from these three sources are therefore very similar. The BMPs for plant site runoff and for the sludge and hazardous waste disposal areas are discussed separately. The advanced BMP alternatives are listed in Table 1 under the four categories of prevention, containment, mitigation, and ultimate disposition.

Table 1. Advanced-BMP Alternatives

BMP Category	Advanced-BMP Alternative	BMP Category	Advanced-BMP Alternative
Prevention	P1 - Monitoring	Treatment Methods (continued)	T4 - Coagulation/ precipitation
	P2 - Nondestructive testing		T5 - Neutralization
	P3 - Labeling		T6 - Ion exchange
	P4 - Covering		T7 - Chemical oxidation
	P5 - Pneumatic and vacuum conveying		T8 - Biological treatment
	P6 - Vehicle positioning		T9 - Thermal oxidation
	P7 - Dry cleanup		
Containment	C1 - Secondary containment	Ultimate Disposition	U1 - Deep-well injecton
	C2 - Flow diversion		U2 - Landfill
	C3 - Vapor control		U3 - Surface impoundment
	C4 - Dust control		U4 - Ocean disposal
	C5 - Sealing		U5 - Direct discharge to receiving water
Mitigation Cleanup Methods	M1 - Physical		U6 - Reclamation
	M2 - Mechanical		U7 - Municipal sewer system
	M3 - Chemical		U8 - Contract disposal
Treatment Methods	T1 - Liquid-solids separation		
	T2 - Volatilization		
	T3 - Carbon adsorption		

Prevention

Prevention BMPs are those practices that provide additional protection beyond the base-line BMPs and involve closer control of plant operations and equipment to prevent release of chemicals from their primary containments. They are relatively less costly than the containment BMPs, which frequently involve major construction and capital expenditures.

Monitoring——Monitoring is the measuring of process parameters to determine operating conditions of a process or piece of equipment. Instrumentation is the method, measure, or equipment used for monitoring a particular process. Monitoring can be used, for example, to detect changes in process parameters such as the liquid level in tanks, or the conductivity of solutions, and the total organic carbon (TOC) concentration in stormwater. Monitoring can be used to initiate a warning of the need for immediate corrective action to prevent a release of chemicals to the environment. For example, detection of a high liquid level could trigger manual or automatic shutdown of the incoming flow. A detected increase in TOC in the stormwater sewer, which would indicate contamination by organics, could be a warning that the stream should be diverted to holding ponds. A monitoring system should be used with an efficient communication or alarm system to immediately notify appropriate plant personnel of abnormal conditions.

For material storage areas monitoring may include liquid-level detectors, pressure and temperature gages, and pressure-relief devices for bulk storage tanks. Numerous types of instrumentation incorporating various measuring principles are available including floats, electrical devices such as capacitors, pressure and temperature gages, pneumatic systems, and ultrasonic and radio-frequency instruments. Monitoring of process variables such as pH, conductivity, total organic carbon, and specific chemicals can be performed with pH meters, conductivity meters, TOC analyzers, and gas chromatographs. Air collection funnels can be used to monitor vapor and gas spills by gas chromatography. Instrumentation measurements should be recorded or displayed at a location where plant personnel can observe measurements. An alarm system can be used to warn of abnormal conditions in the event that an operator does not identify the condition by reading the instruments. Gauges for reading the tank level can also be located at the storage tanks so that an operator will know the volume of a tank at any time for such procedures as loading and unloading, internal inspections, and testing.

For in-plant transfer areas, process areas, and materials handling areas, monitoring systems can include pressure-drop devices, shut-off devices, flow meters, thermal probes, valve positioning indicators, and equipment operational lights. These devices can be utilized to detect the reductions in flow, an abnormal temperature condition, and the condition of valves and other equipment. An abnormal condition indicated by any of these systems may indicate a release that could initiate immediate countermeasures.

For loading and unloading operations, monitoring systems may include devices for measuring the initial volume of tanks before loading, for weighing vehicles or containers, and for determining the rate of flow during loading

and unloading and excess flow valves that shut off when a predetermined flow is exceeded and therefore could result in a spill.

Monitoring can be used to measure the quality of plant site runoff to determine whether discharge to a receiving water is appropriate. Monitoring the quality of runoff could involve measurement of pH, turbidity, conductivity, total organic carbon (TOC), total oxygen demand (TOD), or specific ions in storm sewers, drainage ditches, holding ponds, and diked areas. Monitoring results would be used to determine further courses of action such as discharge of noncontaminated stormwater to the receiving stream or bleeding of contaminated runoff into a treatment system at a controlled rate. The stormwater collection system may be designed to collect the initial or most-contaminated runoff portion in a holding pond and to discharge the remaining, less-contaminated, runoff if it does not exceed the effluent discharge limits specified in an NPDES permit. System designs could include automatic diversion of runoff to a holding basin. A valve or gate can be triggered by a TOC or TOD instrument. Separate areas of the plant site could also be monitored to detect which areas are the major contributors to the runoff contamination. These contaminated areas may then be isolated and segregated for separate treatment and disposal.

For sludge and hazardous waste disposal sites such as landfills, surface impoundments, and deep-well injection sites, monitoring primarily involves measurement of the ground-water quality to detect contamination due to seepage from these disposal sites. Any leachate collected from such sites can be monitored to detect levels of contamination. Monitoring wells can be used near the disposal site to indicate the impact of the site on the ground-water quality. Monitoring could typically involve routine collection of samples for appropriate analysis such as total dissolved solids, chemical oxygen demand, nitrates, and specific toxic or hazardous compounds believed to be present based on the use and contents of the disposal site. Monitoring could also include measuring the liquid level in surface impoundments such as ponds and lagoons to ensure adequate freeboard so that potential overflows are detected and corrections instituted.

Redundant instrumentation such as backup instrumentation or secondary measuring devices can be used to monitor the process if the primary instrumentation should malfunction. This type of instrumentation sometimes will utilize a different measuring principle to ensure against the backup system malfunctioning because of the same reasons or process variables that affected the primary instrumentation devices. Redundant instrumentation may be used where there is a history of instrument failure and/or frequent instrument maintenance requirements. For example, two liquid-level alarms could be used on a material storage tank of a corrosive liquid to provide an extra degree of protection. One level detector could be a float and the backup could be an electrical device.

Nondestructive Testing—Nondestructive testing is the testing of a structure or vessel without is being altered, modified, or disassembled. Nondestructive testing involves the application of measuring methods to examine the structural integrity of tanks, pipelines, pumps, valves, and fittings. Testing methods include hydrostatic pressure tests for storage tanks, pipe-

lines, valves, and fittings and acoustic emission (ultrasonic) testing for the thickness of shell walls and the structural integrity of pipelines and tanks. Nondestructive testing is most applicable to storage tanks, in-plant transfer, process, and materials handling equipment and to loading and unloading operations. These testing procedures have minimal application to plant runoff and sludge and hazardous-waste disposal areas although acoustic emission testing can be used on dikes and surface impoundments to determine locations susceptible to leaks.

In hydrostatic testing a test pump is used to apply a hydrostatic pressure on the tank that is 1 to 1.5 times the maximum allowable working pressure and then, with all valves closed off, observing whether there is a drop in the measured pressure in the tank. A drop in pressure would indicate a weakness of the tank walls or the presence of leaks. Hydrostatic testing can also be applied to pipelines, valves, and fittings to determine their susceptibility to leaks and spills.

Acoustic emission testing is used to determine the structural condition of buried pipelines and dikes. Acoustic emissions are the internally generated sounds that a material produces when it is placed under certain stress conditions. A sensor (an accelerometer or a transducer) is used to detect the acoustic emissions in the form of sounds, which are recorded and related to the basic material characteristics to determine the relative stability of the tank or pipeline being tested. Similar acoustic emission principles can be used to measure tank-wall thickness with an audigage. Tank wall thickness measurements are normally made at various locations around the circumference of the tank. Records of the measurements would be kept to determine whether weaknesses were developing in structural condition. Tank replacement schedules would be determined and implemented, based on measured corrosion rates. Recommended hydrostatic and ultrasonic testing frequencies for bulk storage tanks vary in the literature from two to five years for hydrostatic testing (26, 106) and one to five years for ultrasonic testing (26, R1, 83).

Labeling—Labeling refers to marking such items as tanks, pipelines, drainage ditches, and equipment to inform personnel of the particular chemical being stored or handled and the potential hazards involved. Labeling is applicable to all the ancillary sources although for plant runoff there may only be minimal application, such as labeling drainage ditches to distinguish stormwater from process wastewater. A labeling system used by the Department of Transportation (DOT) based on the degree of hazard associated with corrosive, radioactive, reactive, flammable, explosive, and poisonous characteristics is one example of the kind of labeling system that can be utilized.

Hazardous-chemical storage tanks, pipelines, and buildings would be labeled so that employees and visiting contractors are easily made aware of potential hazards. Hazardous labels using DOT designations or color coding of tanks and pipelines, with periodic markings to explain the color code, can be beneficial in rapidly identifying the contents of a tank or transfer

pipeline. Labeling is used to alert personnel and visitors to be extremely cautious when working or traveling in dangerous areas of the plant.

Labeling also may be used to provide handling and ultimate disposal instructions for chemical wastes. Examples include notices of material compatibility and designation of locations of various hazardous materials in landfills to ensure that personnel and outside contractors are informed of the proper procedures to use in handling and disposing of wastes.

Covering—Covering comprises the partial or total physical enclosure of material, equipment, or process operation. Covering is applicable to storage areas for dry chemicals, plant runoff, and surface impoundments used for sludge and hazardous waste disposal. Covering such as tarpaulins can be used to cover outdoor storage stockpiles of dry materials to prevent windblowing and runoff contamination. Covering in the form of a building or a roof over an outside process area can be used to prevent rainwater contamination and subsequent runoff contamination. Drainage from a roof or building can be captured and directed to the stormwater sewer or drainage system to prevent it from coming in contact with chemicals used in the process areas. Protective coverings such as grass, rock, and synthetic materials can be used on surface impoundments such as dikes, ponds, and lagoons to protect against wind and runoff erosion, which would cause an overflow to a receiving water. Landscaping (planting of trees, grass, and shrubs) also may serve to absorb runoff and reduce windblowing to accomplish the same objectives as covering.

Vehicle Positioning—Vehicle positioning is the practice of properly locating the loading or unloading vehicle so that it is stable and cannot be moved during transfer operations. Physical barriers can be used to prevent truck or rail car movement. It also includes the proper positioning of vehicles relative to containment or flow diversion systems should the transfer connections or lines develop a leak. Examples include positioning vehicles either over a drain or on a sloped pavement that drains to some form of containment. Wheel chocks on vehicles provide another safeguard against accidental vehicle movement and rupture of transfer lines.

Pneumatic and Vacuum Conveying—Pneumatic and vacuum conveying is the transfer of chemicals, normally in the dry form, from one vessel to another and applies mainly to in-plant transfers, materials handling, and loading and unloading areas. Pneumatic conveying utilizes air pressure, whereas vacuum conveying uses suction to transfer chemicals.

Pneumatic transfer eliminates the need for mechanical, conveyor-belt systems and the use of water to form pumpable slurries. Pneumatic systems have become popular because of their simplicity and the relative speed with which they can be loaded and unloaded. They also serve to minimize the potential for spills due to the total, enclosed nature of the system, whereby the chemicals are not exposed as with mechanical conveyors but are contained during the entire transfer operation. Dry chemicals are simply moved by air

pressure from truck or rail car to storage tanks by connecting hosing or pipeline. A safety-relief valve and a dust collector are mounted on top of the storage vessel to exhaust the air used for conveying and to separate out the dry chemicals. Air slide trucks and rail cars are also used in pneumatic conveying of dry chemicals. With these units the dry chemical is fluidized by low-pressure air and conveyed in a slightly inclined trough to the discharge end of the truck or car. A mechanical conveyor is then normally used with this type of system to transfer the dry chemical.

A vacuum conveying system is similar to the pneumatic conveying system; however, a suction system is used to transfer the chemicals. A dust collection device and a drainage air lock such as a rotary gate or trap-door feeder are normal components of a vacuum conveying system.

Although pneumatic and vacuum conveying systems can be good BMPs, proper design and operation can be critical and essential to eliminate serious air emission problems. This is particularly true with pressurized systems since all leaks are outward and the toxic or hazardous dust or gas must be adequately removed from the conveying fluid before it is exhausted to the atmosphere.

Dry Cleanup——Dry cleanup is simply physical and mechanical cleanup for dry chemicals rather than hosing down the dry chemicals to the drainage ditch or sewer collection system. This BMP applies to material storage, in-plant transfer areas, process areas, materials handling areas, loading and unloading areas, and sludge and hazardous-waste disposal sites. Cleanup and reclamation of dry chemical spills from these sources with shovels, brooms, and vacuum cleaning systems are very effective practices in preventing the chemicals from reaching a receiving water. Dry cleanup of material spilled at sludge disposal sites, rather than washdown with water, is also an effective BMP to prevent contamination to the surface or ground water.

Containment

Containment BMPs are used to physically contain or capture a release of material. Containment BMPs are a second line of defense and thus augment the effectiveness of the prevention BMPs by preventing a release of material from reaching the receiving water since the release is physically confined and prevented from moving any further. Containment has been subdivided into secondary containment, flow diversion systems, dust control, vapor control, and sealing. Each of these BMPs is defined and discussed.

Secondary Containment——Secondary containment is the physical confinement of material at its original location. Secondary containment is accomplished by physical structures or by collection equipment such as a storage tank, pipeline, truck, or rail car, to contain the material after it has been released from its original container. Secondary-containment BMP alternatives include

dikes, curbs, depressed areas, storage basins, sumps, drip pans, liners, double-walled piping, and sewer collection systems. These BMPs can be applied to any of the ancillary sources. However, they are related to the volume of material to be contained and the ancillary source as discussed below.

Dikes and depressed areas are normally used around those areas where large volumes of chemicals are stored. Drip pans are used for relatively small volumes of leaks from pumps, valves, and fittings. Sewer collection systems are used to collect and contain plant runoff, and liners are used to contain material in landfills and surface impoundments to prevent percolation of material to the ground water. Cleanup materials such as sorbents, foams, and gelling agents, which are discussed later in this section can also be used for immediate containment when physical containment is not available. The use of foams that solidify to form a physical barrier or dike can be used to form secondary containment. Application of secondary containment relative to the various ancillary sources is discussed as follows.

For material storage areas, secondary-containment alternatives include dikes, berms, retaining walls, curbs, depressed areas, storage or holding basins, and wastewater treatment plants. The containment volume is normally sized to capture the volume of the largest tank in the drainage area, with a reasonable allowance made for rainfall based on local historical rainfall records. A containment volume of 110% of the largest tank or the largest volume tank plus a 24-hour, once in 10-year, rainfall event is a common practice used for sizing of secondary containment. Sizing for the once-in-25-year rainfall event provides an extra margin of safety. Final sizing, however, to fit the specific situation and circumstances would be determined from good engineering practice. There are a number of engineering and operational aspects that should be considered in the design of the containment structure. The secondary-containment structure should be sufficiently impervious to contain a spilled material and prevent seepage to the outside or to the surface or groundwaters. The material used for containment should be compatible with the chemicals to be contained. Materials such as concrete, asphalt, or clay typically are used. A layer of crushed limestone or clam shells can sometimes be used on top of the dike base or flooring to neutralize acids. There should be sufficient distance between the containment walls and the storage tanks that the hydrostatic head will not cause a discharge over the containment wall. The sewer system should have no drains or openings that could permit gravity flow. Manually controlled pumps and manual valves should be considered for emptying the containment volume for receiving or disposal. Operators should be suitably trained on when to turn on pumps and open valves so that there will be no uncontrolled release of material. The composition and quantity of a spill would be determined before subsequent recovery, treatment, and disposal options are decided on.

The group of applicable secondary-containment alternatives for in-plant transfer, process areas, materials handling, and loading and unloading areas will be slightly different from those for the material storage areas. The alternatives include dikes, curbs, depressed areas, drip pans, sumps, foam dikes, storage or holding basins, and double-walled piping. These BMPs can be applied for liquids and dry chemicals and would be utilized for pipelines,

pumps, valves, fittings, and mechanical conveyor belts at locations of potential release. The use and sizing of these secondary-containment alternatives are related to the volume of the potential release. Minor- or small-volume leaks from pumps, valves, or fittings may be contained by drip pans, depressed areas, or curbing, whereas larger releases from loading and unloading operations may require dikes, depressed areas, sumps, or storage or holding basins. Double-walled piping, in which one pipe is contained within another pipe, is a form of secondary containment used to confine a leak from a pipeline and can be used for transfer pipelines.

For plant site runoff, secondary-containment alternatives include collection of runoff in stormwater or combined sewer collection systems, diked areas, holding or diversion ponds, and curbed areas. Containment of plant-site runoff involves a collection system, with diversion of the flow to some form of containment or treatment. Since it is uneconomical to size the collection system and storage to contain all rainfall events, stormwater overflow is inevitable at times. Sizing of containment facilities for runoff is normally based on the statistical properties of the rainfall in an area and on a cost-versus-impact analysis. The reader is referred to ref. 79 in Appendix A for a more detailed discription of approaches available for developing plot-runoff control strategies. Monitoring, discussed previously, can be used to detect and divert contaminated runoff to holding basins and for effluent discharge consistent with limitations and other conditions defined in NPDES permits.

For sludge and hazardous-waste disposal areas, secondary-containment alternatives include dikes, liners, and leachate collection systems. Diked areas can be used to contain runoff and overflow from waste disposal sites such as landfills and surface impoundments. Liners and leachate collection systems can be used to prevent leachate from landfills and surface impoundments from seeping into the ground water or discharging to surface water. Liners may consist of natural materials such as clay or of synthetic materials such as polyethylene, hypalon, and butyl rubber. Liners can be used to drain the leachate to an underground collection system for transfer to treatment and/or disposal facilities.

Flow Diversion——Flow diversion is used to divert a flow or discharge from its original location to containment or treatment, usually at another location. Secondary containment, previously discussed, is usually associated with and located close to the source of a potential release. Flow diversion systems are applicable to all ancillary sources and may be applicable at sites where it is physically impossible to locate complete or total secondary containment. Systems include trenches, drains, graded pavement, grating, overflow structures, sewers, and culverts. The flow diversion systems would ultimately transport the spilled material to remote secondary-containment facilities, such as storage or holding basins, ponds, and lagoons. Sluice gates and valves can be triggered by monitoring instrumentation to divert flow to a holding pond when a spill is detected. For volatile compounds, closed diversion systems such as pipelines may be more appropriate than open drainage ditches.

A system of trenches, drainage ditches, and sewers can be used to segregate plant runoff from process wastewater and spill-prone areas, to prevent contamination of the runoff. Flow diversion systems can also be used to segregate individual process waste streams to contain a spill, to protect treatment facilities, or to minimize a release to the surface waters.

For sludge and hazardous-waste disposal sites flow diversion systems such as drainage ditches and trenches can be utilized to divert runoff from the disposal sites and to collect and divert contaminated leachate to subsequent treatment and disposal operations.

Vapor Control——Vapor control is the collection or containment of volatile fumes, vapors, and gases to prevent release to the atmosphere where deposition, due to condensation, rainfall, etc., may wash the chemicals to the ground and subsequently to the receiving water. Vapor control techniques include water spraying, vapor space, and vacuum exhaust.

In water spraying a water mist is sprayed over the spill of a volatile material or gas to reduce its dispersion in the air. A water supply must be available, and secondary containment or diversion to treatment must be provided for the resulting contaminated water stream. Water spraying, which removes water-soluble vapors and gases from the air, will help to protect plant personnel from noxious fumes and vapors and thus may serve simultaneously as both a BMP and an occupational safety measure.

Vapor space is the use of a secondary wall around a storage tank or a pipe surrounding another pipe to capture fumes or gases that may be released. This BMP is used for the capture of vapor and fumes from volatile liquids and gas releases. One company utilizes this approach for containment of vapors from a tank containing an ammonium hydroxide solution. In some cases partial control can be achieved by minimizing the surface area of spilled fuming materials.

Vacuum exhaust is the collection of vapors or gases from storage vessels by a suction-type ventilation system. For example, during unloading or loading operations a vacuum device can be connected to a rail car's vapor ports and exhaust vapors into a collection header. The exhausted vapors can then be treated by various methods such as incineration, caustic-spray, adsorption, etc., to control odors and vapor emissions. A practiced example of this approach is the containment and collection of chlorine gas and mitigation with an alkaline absorption system. Air emissions from exhaust systems should comply with applicable air pollution regulations.

Dust Control——Dust control is the collection or containment of chemical dusts. Control of dust can prevent potential spreading and fallout in other areas of the plant, where runoff may eventually transport the material to the sewer collection system or directly to a receiving water. Dust may also need to be controlled for safety and fire protection. Dust control systems apply mainly to in-plant transfer, process areas, materials handling, and loading and unloading areas and may include hoods, cyclone collectors, bag-

type collectors, filters, negative-pressure systems, and water spraying. Hoods can be used to minimize the spread of dust when drums or bags are being filled or emptied. Cyclone collectors separate the dry chemicals and the air by centrifugal force. Bag collectors and fabric filters remove dust by filtration. Storage of the collected dust should be carefully considered so that it does not become a source of fugitive dusts. Negative-pressure systems minimize the release of dust from an operation by maintaining a slight negative pressure or suction to confine the dust to the particular operation. Water spraying confines and settles the dust from the air and prevents further spread to other areas. With water spraying, secondary collection, and containment, recovery or disposal means must be provided for the liquid waste. Where practical, dry cleanup is preferred.

Sealing——Sealing is the technique or practice of plugging leaks in a vessel or container to minimize the volume of material released. Foamed plastic compounds are used to plug leaks in vessels. A leak plugging system can be applied to storage vessels and pipelines and consists of a foam supply device and an applicator that places the foam in the opening of the ruptured containers so as to plug the leak. Portable, easily operated, one-man application units are used to apply urethane foams, which harden and expand within and outside a tank or pipe wall, effectively sealing the leak.

Dikes, ponds, and lagoons sometimes leak as a result of improper design, erosion, or other causes. Materials such as Volclay®, which swell upon contact with water, may be used to seal leaks of this type.

Mitigation——Cleanup Methods

Mitigation BMPs listed in Table 1 have been divided into two categories: cleanup and treatment. Once a hazardous material spill occurs and is contained, the material has to be cleaned up and disposed of to protect plant personnel from potential health and fire hazards and to prevent the release of the substance to surface waters. The health and safety of personnel are of primary consideration when BMP programs are designed and specific BMPs are selected.

Cleanup BMPs are the practices used to physically, mechanically, or chemically remove a spilled material. Containment of the material is, of course a prerequisite to effective and complete cleanup operations. Wide dispersion of a spill or its loss into a receiving water could greatly minimize the effectiveness of a cleanup operation. Cleanup BMPs are independent of ancillary source and would be utilized for immediate cleanup of a substance for subsequent recovery, treatment, or disposal. Sorbents, gelling agents, and foams can also be used for secondary containment when diking, curbing, and holding basins are not available.

Physical——Physical methods for cleanup of dry chemicals include the use of brooms, shovels, or plows. Containers must be provided for the material to

be removed, and cleanup crews can be assigned beforehand to handle this task. After cleanup, the materials could be reclaimed or disposed of in appropriate sludge and hazardous-waste disposal sites. Physical cleanup is an alternative to a water hosing of the chemical to the sewer system and is an effective BMP that can be included in a good housekeeping program. The physical cleanup devices would be readily available for use with releases of dry chemicals from sources such as mechanical conveyor systems and packaging operations.

Mechanical——Mechanical methods for cleanup include the use of vacuum cleaning systems and pumps. Vacuum cleaning includes vacuum cleaners or vacuum trucks, and pumping could include pumping to a storage vessel or tank. Mechanical methods could be used for liquid and solid chemicals before they are recovered, treated, and ultimately disposed of. A portable pump/bag cleanup system incorporating a collapsible, chemically resistant, bag, pump, hoses, connectors, and power supply has been used on spills of up to 7000 gal.

Chemical——Chemical cleanup of material can be accomplished with the use of sorbents, gells, and foams. Sorbents are compounds that remove materials by surface adsorption or by adsorption and absorption in the sorbent bulk. Sorbents include materials such as activated carbon, polyurethane, polyolefins, "universal sorbent material," clays, sawdust, straw, and fly ash. Sorbents adsorb or absorb only those materials that impinge on their surface and therefore must be mixed into the material or the material must be passed through the sorbent, either in a support bed or in a column.

Sorbents are available in many physical forms, from particles to foams. Granular or powdered activated carbon can be mixed with liquids to adsorb organics. In some cases in situ mixing of pollutants with a material such as granular activated carbon may be a viable method. Organics diluted with water can be passed through a carbon column to remove organics from the liquid. The carbon can be regenerated by several techniques. Polyurethane and polyolefin are imbibitive polymers available in the shape of spheres, beads, or foam belts. Polyurethane has an open-pore structure that absorbs a variety of such liquid chemicals as benzene, chlorinated solvents, epichlorohydrin, and phenol, similar to a sponge absorbing water. Polyolefin is similarily used to remove organic solvents, such as phenol and various chlorinated solvents. Typically, spheres and beads are mixed into a spill by use of a blower and are skimmed from the surface by an oil boom. The foam belt is passed continuously through the liquid and is regenerated by squeezing to remove the absorbed material for recovery and disposal. "Universal sorbent material" (USM) is an amorphous silicate glass foam consisting of spheroid shaped particles with numerous cells and is a suitable sorbent for many classes of compounds, including acids, alkalis, alcohols, aldehydes, arsenates, ketones, petroleum products, and chlorinated solvents. Clays and sawdust can also be used to absorb materials, and are spread, usually over a small area, with shovels.

Gelling agents chemically interact with the sorbate by concentrating and congealing it to form a rigid or viscous material more conducive to mechanical cleanup than the chemical itself is. The gel components selectively interact with the appropriate chemicals by polymerization and thickening, as opposed to sorbents that absorb or adsorb the chemicals. Gelling agents include polyelectrolytes, polyacrylamide, butylstyrene copolymers, polyacrylonitrile, polyethylene oxide, and a "universal gelling agent," which is a combination of these materials. The universal gelling agent can be used to seal narrow slits in containers, immobilize liquid on land, prevent percolation to the soil, and reduce the surface spreading of a spill. It can be applied by mobile dispensing units. The gel is then recovered for subsequent treatment or disposal.

Foams are mixtures of air and aqueous solutions of protein and surfactant-based foaming agents. Types of foams include rockwood alcohol, protein, fluroprotein, aqueous-film-forming foam, polar liquid foam, and surfactant-based foam. Many of the foams are commonly used for extinquishing flammable-liquid fires, and as a result have been applied to control spills of highly volatile and flammable substances. A foam blanket reduces vapor concentration above the spill surface, decreases the evaporation rate, provides a barrier to thermal or solar radiation, and inhibits ignition or flame propagation by blocking radiant energy, diluting the spill surface, and absorbing the vapors. Foam spreading is accomplished by surfactants, which lower the surface tension of the applied solution. Foams also can be applied through a water sprinkler system. Foams are normally effective for 30 to 60 minutes and require reapplication at appropriate intervals to maintain vapor suppression.

Mitigation——Treatment Methods

Treatment is a method of mitigation to reduce the potential impact of a material on the water quality, to pretreat a material before ultimate disposal, or to separate valuable materials for recovery. In order to apply treatment practices to a spilled material, the material first has to be collected or contained. Materials to be treated could include dust or dry chemicals, liquid materials collected in secondary-containment facilities, and contaminated storm water collected in diked or curbed areas. Treatment alternatives that may be considered include a process wastewater treatment plant, a separate treatment facility such as a neutralization step, a municipal treatment facility, or a portable treatment system contained in a trailer or similar mobile device. The effectiveness of the available system to treat the spill depends on the rate, concentration, volume, and nature of the toxic and hazarous substances involved. Previous testing through a materials inventory program (base-line BMP) will provide guidance for the appropriate treatment method or methods. Numerous references, text books, and journal articles are available that review in detail treatment technologies. For a detailed description of these treatment processes and the typical design criteria used, the reader is referred to the references cited in Appendix B under "Treatment——General." While the requirement that specific chemicals receive

adequate treatment is within the scope of BMPs, the details of the treatment systems are normally left to the discretion of the discharger.

Treatment processes can be classified as physical, chemical, biological, and thermal oxidative processes. Physical treatment processes can be used to mitigate material spills through removal of floating and settleable materials, volatile constituents, and dissolved organic materials from the wastewater. Some of the more popular physical treatment processes that can be used to treat toxic and hazardous substances include liquid-solids separation, volatilization, and carbon adsorption. Chemical treatment processes are used to remove dissolved organics and inorganics from a wastewater and to adjust the hydrogen or hydroxyl ion concentration for pH control. The more common chemical treatment processes include chemical coagulation and precipitation, neutralization, ion exchange, and chemical oxidation. Biological waste treatment is used to remove dissolved organics from wastewater by contact with a concentrated population of microorganisms, which stabilize the organics to carbon dioxide and water. Thermal oxidation (incineration) is used to oxidize organics, by controlled burning at high temperatures. A brief discussion of some of the more common treatment processes is presented to provide a general understanding of the types and applicability of the processes commonly used for treating toxic and hazardous substances.

Liquid-Solids Separation——Liquid-solids separation processes are used to physically separate particulate or floating matter from a wastewater. Some examples of liquid-solids separation processes include screening, clarification, air flotation, filtration, and dewatering. Liquid-solids separation processes are commonly used as pretreatment prior to other treatment processes such as chemical or biological treatment.

Volatilization——Volatilization is used to remove volatile constituents in wastewater. The volatile components of the wastewater are separated to a gas phase or stream, which can then be recovered or treated by thermal oxidation (incineration) or chemical oxidation. The gas phase must be collected and treated to minimize the release of toxic and hazardous vapor releases to the atmosphere. Some examples of volatilization processes include distillation, stripping, and evaporation.

Carbon Adsorption——Carbon adsorption is used to remove dissolved organics from a wastewater by the adsorption or attraction of substances to the surfaces within the porous structure of the carbon. Granular and powdered activated carbons are used as adsorbents for wastewater treatment. Carbon adsorption processes include fixed-bed columns and direct addition and contact with the wastewater in a mixed basin. Carbon can be removed from the column or basin and regenerated for reuse by thermal processes, solvent regeneration, or steam regeneration. The organic substance stripped from the carbon during regeneration can be reclaimed or disposed by some other method such as chemical or thermal oxidation.

Chemical Coagulation/Precipitation——Chemical coagulation/precipitation is used to remove suspended and colloidal particles from solution by adding chemicals to destabilize the forces that keep colloidal and suspended particles apart. The destabilized particles, which are aggregated together to form chemical flocs, are removed by such processes as sedimentation or filtration. Some examples of chemical coagulants include aluminum sulfate, lime, copperas, ferric sulfate, ferric chloride, sodium aluminate, and polyelectrolytes. In chemical precipitation, which is used for removal of organic and organic heavy-metal compounds from solution, chemicals such as calcium hydroxide or sodium hydroxide are added to form an insoluble precipitate. Chemical precipitation is normally followed by liquid-solids separation for removal of the insoluble precipitate.

Neutralization——Neutralization is the addition of an alkali to an acid or an acid to an alkali to adjust the pH of a wastewater. Examples of neutralization are adjustment of the pH of a wastewater to a neutral range of about 7.0 as a pretreatment to biological treatment or the adjustment of the pH to a relatively high level of 10 to 11 for chemical precipitation of heavy metals. The more common neutralizing chemicals include sodium hydroxide, calcium hydroxide, and sodium bicarbonate for acid neutralization and sulfuric and hydrochloric acids for neutralization of alkali.

Ion Exchange——Ion exchange is used mainly to remove inorganics; however, some organics such as phenol and amines can also be removed by ion exchange. Ion exchange removes these materials by adsorption onto a natural or artificial resin material such as zeolite or synthetic materials such as styrene divinyl benzene compounds. Ion exchange resins can be regenerated by using a solution of the anion or cation used in the resin.

Chemical Oxidation——Chemical oxidation is used to completely oxidize organics to innocuous end products or to partially oxidize organics for detoxification. Chemical oxidation involves the transfer of electrons from one species to another. Chemical oxidation can be used for materials that are not amenable to biological treatment such as organics containing heavy metals, chlorinated hydrocarbons, and pesticides. Some examples of chemicals used for chemical oxidation include chlorine, sodium hypochlorite, ozone, hydrogen peroxide, potassium permanganate, and chlorine dioxide.

Biological Treatment——Biological waste treatment can be aerobic, anaerobic, or both, and the microorganisms can be present as flocculated suspensions or as a fixed film on some support medium. Some examples of biological waste treatment processes are activated sludges, trickling filters, stabilization ponds and lagoons, rotating biological contactors, fluidized-bed systems, and anaerobic filters. Specific toxic substances such as heavy metals and pesticides can inhibit biodegradation if they are present in the wastewater at inhibitory concentrations. In some cases, through gradual acclimation, microbial populations can be specifically adapted for the oxidation of wastes

normally resistant to biological degradation. Treatment for pH adjustment and for removal of suspended solids, oil and grease, and heavy metals is usually required preceding biological treatment.

Thermal Oxidation——Thermal oxidation can be applied to solid, liquid, and/or gaseous organic materials and may require control systems such as flue gas scrubbers to minimize the release of toxic and hazardous vapors to the atmosphere. Some examples of thermal oxidation systems include the rotary-kiln, multiple-hearth, and fluidized-bed types. End products of the oxidation are carbon dioxide, water, and, depending on the nature of the waste material, hydrogen chloride, sulfur dioxide, and other by-products.

Ultimate Disposition

Ultimate disposition BMPs are associated with the final disposal of a spilled material. Typical disposal alternatives listed in Table 1 include deep-well injection, landfills, surface impoundments, ocean disposal, direct discharge to a receiving water, reclamation of the material, discharge to the municipal sewer system, and contract disposal. BMPs for sludge and hazardous waste disposal sites, which were considered previously in this chapter as ancillary sources, have already been discussed under prevention and containment BMPs. There are a number of detailed references available which discuss ultimate disposition in detail. A general discussion of ultimate disposition alternatives is presented to provide some familarity with the available alternatives for final disposal of a spilled material. For a detailed description of ultimate disposition techniques the reader is referred to the references in Appendix B.

When considering ultimate disposition of toxic and hazardous wastes, guidelines and criteria set forth in the Resource Conservation and Recovery Act (RCRA) also need to be addressed. Guidelines and best management practices for landfills, surface impoundments, and contract disposal are discussed in proposed RCRA regulations (162).

Subtitle C of the proposed regulations set forth a management scheme that provides for "cradle to grave" regulations which include: (a) an identification and listing of "hazardous wastes" according to specific criteria (Section 3001); (b) standards of performance (Section 3004) for those who store, treat, or dispose of such wastes; (c) permits (Section 3005) for storage, treatment, and disposal facilities for generators having onsite waste handling facilities; (d) a manifest system (Section 3002) which requires labeling by the waste generator to direct and trace the movement of the waste from point of generation to ultimate disposal; and (3) notification requirements (Section 3010) for generators, transporters, and treatment, storage, and/or disposal facilities. The states will be authorized to run the hazardous-waste program; EPA will implement it until the states are authorized.

Deep Well Injection——Deep well injection is the pumping of toxic and hazardous wastes into a porous and permeable subsurface strata. The wastes are sealed and confined between impervious strata such as rock or clay to prevent seepage into groundwater aquifers. The objective of deep well injection is to place the water in a safe subsurface site where it will not affect the environment. A difficulty encountered with this practice has been a failure to prevent seepage of toxic or hazardous waste into the groundwaters and the subsequent migration of the waste to the surface waters. The EPA has recently proposed regulations for deep well injection which must be considered before selecting this disposal method.

Landfill——A landfill, in this document, is considered to mean a "secure" landfill, a term which has come to be associated with landfills for the disposal of hazardous wastes. A landfill operation involves the deposition of the waste in a controlled manner into a prepared portion of a carefully selected site followed by spreading and covering or blending with soil. Landfill sites have been ultimately reused after the site is closed and properly sealed to prevent release of toxic and hazardous materials. Landfills are applicable to liquids, sludges, or solid chemical wastes. Some examples of secure landfill base materials include bedrock, shale or clay or material with synthetic liners to prevent seepage to groundwater.

BMPs such as visual inspections, monitoring, and containment are incorporated at these disposal facilities to protect the environment and human health. Potential problems associated with these landfills include leaching of material into the groundwater with subsequent migration to the surface waters, contamination of rainwater and runoff, and release of gases and vapors to the air with subsequent dispersal and contact with surface waters.

Surface Impoundments——Hazardous wastes can be disposed to suitable natural or man-made impoundments such as pits, lagoons, or ponds and other depressions in the land or built-up diked areas. Surface impoundments are normally uncovered and can utilize natural soil or synthetic liners to prevent seepage of leachate to the surface or groundwater. Due to the open exposure to the atmosphere, odor problems can occur and isolation in the form of a buffer zone is required for aesthetic and public health reasons. The surface impoundments are more applicable at isolated plants in warmer climates where the surface impoundment could be utilized as an evaporation pond (if the contaminant is not volatile) for recovery or final disposition.

Ocean Disposal——Ocean disposal of toxic and hazardous wastes is the discharge of these wastes into ocean waters at designated waste disposal areas. Ocean disposal requires a discharge permit and a monitoring program to determine the impact of the discharge. Use of this disposal technique for concentrated untreated wastes and sludges is discouraged by EPA and may be discontinued in the future. Presently, EPA regulations require all ocean dumping to be stopped by 1981; however, some extensions may be granted in specific cases.

Discharge to a Receiving Water——Discharge of toxic and hazardous materials to a receiving water may be a feasible alternative, depending upon the water quality impact and the terms and conditions specified in the NPDES wastewater discharge permit. Disposal of a spilled material by discharge to a receiving water would require treatment to levels consistent with applicable effluent limitations, either in separate treatment facilities or in facilities treating the plant process wastewaters. Examples of discharge to receiving waters may include discharge of diluted neutralized acid spills or discharge of a low concentration of residual organics from a spill material after biological treatment. Chapter 5 provides a methodology for evaluating water quality impact and discusses considerations relative to receiving water such as aquatic toxicity and the temporal and spatial impact of a release of material on the receiving water.

Reclamation——Reclamation is the recovery of the spilled material for further processing as a raw material, intermediate, or product. Many spilled materials, in sufficient volume, are valuable materials and would normally be reclaimed if economically attractive rather than disposed of to treatment and disposal sites. Determining the feasibility of reclaiming solids, liquids, or gases, however, can be a simple or complex problem depending primarily on the degree of contamination with other chemicals, the nature of the specific contaminants, the volume, and the frequency of occurrence. In relatively simple situations, reclaiming the material can be readily accomplished. Reclamation of liquids could be feasible where the spill was caught in a "clean" secondary containment facility. The liquid could be removed by pumping and transferred to the appropriate material storage tank. "Clean" solid materials could be reclaimed by an appropriate dry cleanup method followed by transfer of the solids to the appropriate material storage tank. Reclamation could also be attractive in cases where the contaminants do not diminish the usefulness of the material. Each situation would have to be evaluated on its individual merits.

Municipal Sewer System——For industrial plants which normally discharge their process wastewater to a municipal treatment facility, this alternative may also be available for handling material spills. Discharge to the municipal sewer system would depend on the compatibility of the material with the municipality's treatment system and local pretreatment requirements. A spill could be diverted to the normal process wastewater that is treated at the municipal treatment facility. Pretreatment, such as equalization and neutralization at the industrial site, is commonly required to prevent harm to the municipal treatment system. The discharge to the municipal system would have to conform to any applicable pretreatment requirements to avoid exceeding discharge limitations imposed on the industrial contributor. The industry would also need to conduct a routine monitoring and sampling program for its discharge. The municipality should also be notified prior to any discharge which may be harmful to the municipal treatment plant.

Contract Disposal——Contract disposal of waste materials is the ultimate disposition of wastes by a second party or contractor for a fee. The contract

disposal of hazardous waste must be in accordance with applicable regulations under the Resource Conservation and Recovery Act (RCRA). The outside contractor and the company should fully understand the obligation and potential liabilities involved to ensure safe and proper disposal of the material. Careful consideration has to be given to the experience, responsibility, and reputation of the contractor prior to selection. Central treatment facilities and waste exchange centers are possible alternatives to contract disposal. Such facilities can offer an expertise in the handling, treatment, and disposal of hazardous wastes.

In summary, elements that may be applicable for each of the advanced BMPs include the following:

PREVENTION

- Monitoring
  - Liquid-level detectors
  - Alarm systems
  - Pressure and temperature gauges
  - Pressure-relief devices
  - Analytical testing instrumentation
  - Pressure-drop shut-off devices
  - Flow meters
  - Valve positioning indicators
  - Equipment operational lights
  - Excess-flow valves
  - Automatic runoff diversion devices
  - Routine sample collection
  - Redundant instrumentation
- Nondestructive Testing
  - Hydrostatic pressure tests
  - Acoustic emission testing
  - Records of tank wall thicknesses
- Labeling
  - Department of Transportation designation on tanks and pipelines
  - Color coding of tanks and pipelines
  - Warning signs
- Covering
  - Tarpaulin over outdoor dry chemical stockpiles
  - Building or roof over outside process
  - Vegetation, rock, or synthetic covering on surface impoundments
- Pneumatic and Vacuum Conveying
  - Loading and unloading by air pressure or vacuum
  - Safety-relief valves
  - Dust collectors
  - Air slide trucks and rail cars
- Vehicle Positioning
  - Physical barrier (e.g., wheel chocks)
  - Underlying drain
  - Designating loading and unloading area
- Dry cleanup
  - Shovels, brooms, vacuum systems

CONTAINMENT

- Secondary Containment
  - Dikes
  - Curbs
  - Depressed areas
  - Storage basins
  - Sumps
  - Drip pans
  - Liners
  - Double piping
  - Sewer collection systems
  - Foam dikes
  - Leachate collection systems
- Flow Diversion
  - Trenches
  - Drains
  - Graded pavement
  - Grating
  - Overflow structures
  - Sewers
  - Culverts
- Vapor Control
  - Water spraying
  - Vapor space
  - Vacuum exhaust
- Dust Control
  - Hoods
  - Cyclone collectors
  - Bag-type collectors
  - Filters
  - Negative-pressure systems
  - Water spraying
- Sealing
  - Foamed plastic compounds used for plugging leaks in tanks

MITIGATION

- Cleanup Methods
  - Physical
    - Brooms
    - Shovels
    - Plows
  - Mechanical
    - Vacuum systems (e.g., trucks)
    - Pumps
    - Pump/bag system
  - Chemical
    - Sorbents
      - Activated carbon
      - Polyurethane and polyolefin spheres, beads, and foam belts
      - Amorphous silicate glass foam

- Clay
- Sawdust
- Gelling agents
  - Polyelectrolytes
  - Polyacrylamide
  - Butylstyrene copolymers
  - Polyacrylonitrile
  - Polyethylene oxide
- Foams
  - Rockwood alcohol
  - Protein
  - Fluroprotein
  - Aqueous-film-forming foam
  - Polar liquid foam
  - Surfactant-based foam

Treatment Methods

- Liquid-solids separation
  - Screening
  - Clarification
  - Air flotation
  - Filtration
  - Dewatering
- Volatilization
  - Distillation
  - Stripping
  - Evaporation
- Carbon adsorption
- Coagulation/precipitation
- Neutralization
- Ion exchange
- Chemical oxidation
- Biological treatment
- Thermal oxidation

ULTIMATE DISPOSITION

- Deep-Well Injection
- Landfill
- Surface Impoundments
  - Pits
  - Ponds
  - Lagoons
- Ocean Disposal
- Discharge to a Receiving Water
- Reclamation
- Municipal Sewer System
- Contract Disposal

SECTION 4

CLASSIFICATION OF TOXIC AND HAZARDOUS SUBSTANCES

INTRODUCTION

A classification of individual toxic and hazardous substances was developed for relating BMP alternatives to groups of toxic and hazardous substances. Review of the information collected on BMPs indicated that specific BMPs are related to the physical and chemical characteristics of substances and therefore apply to groups of substances with similar characteristics rather than exclusively to a specific chemical compound.

This section presents a classification for the 129 materials classified as priority pollutants and the 299 compounds classified as hazardous compounds described in Section 1. Of the 299 hazardous substances listed, 126 compounds are included on by the priority-pollutant list, leaving 173 compounds classified as hazardous compounds only. The combined list of 302 compounds was evaluated in developing the classification.

Several methods of classifying toxic and hazardous substances were reviewed. These classifications systems included the following: Department of Transportation Hazardous Materials Designation Method (DOT) (119),* Standard Transportation Commodity Codes (STCC) (119), Modified IMCO/Gesamp Methodology Classification (119), EPA Physical/Chemical/Dispersal Method (119), EPA Toxicity Classification Method (21), National Fire Protection Association Hazardous Identification System (121), Hazardous Potential Index (119), Environmental Impact Index Manufacture and Distribution Factors (119), Environmental Hazard Index (119), Rice University Classification by Chemical Family Groups (50), and Allegheny Sanitary Authority Classification (48). These classifications are based on such parameters as transportation hazards, physical and chemical properties (i.e., density, volatility, and solubility), aquatic toxicity, hazards related to fire prevention and control, quantity of chemical manufactured, and chemical family. These classifications apply mainly to the hazardous substances; only a few of the priority pollutants are included. Several of the physical and chemical properties identified in these classifications were considered to be important in identifying BMP alternatives. These properties include the physical state (solid, liquid, or gas) and the physical and chemical characteristics of the substances, such as human toxicity, flammability, corrosiveness, reactivity, and volatility. These same physical and chemical characteristics of substances are commonly important design considerations safety and fire protection programs and can be similarly useful for BMPs.

The first grouping of the compounds was based on the physical state of the compound at normal temperatures and pressures [20 to 25°C, 1 X 10^5 Pa (1 atm)]. Of the 302 chemicals, 175 are solids, 111 are liquids, and 16 are gases. The chemical's physical state will directly determine which BMPs may be applicable to the chemical. For example, the BMPs used for the cleanup of liquids will differ from those used for solids or dry chemicals. Solids are normally cleaned up by physical and mechanical methods before being processed for recovery.

Table 2 lists the classifications developed based on the important physical and chemical characteristics of the compounds. The following chemical group definitions were obtained from the chemical classifications systems reviewed:

CHEMICAL GROUP DEFINITIONS

Human Poisons (119)

All substances poisonous to humans are ranked as Class A or Class B poisons by the Department of Transportation, which are defined as follows:

Class A——A poisonous gas or liquid which, when mixed in small amounts with air, is dangerous to life.

Class B——A substance, liquid or solid, known to be so toxic to man as to constitute a hazard to health during transportation or presumed to be toxic to man because it falls within any one of the following categories when tested on laboratory animals:

Oral toxicity: a single dose of 50 mg or less per kilogram of body weight when administered orally produces death within 48 hr in half or more than half of a group of 10 or more white laboratory rats weighing 200 to 300 g.

Toxicity on inhalation: continuous inhalation for 1 hr or less at a concentration of 2 mg or less per liter of vapor, mist, or dust produces death within 48 hr in half or more than half of a group of 10 or more white laboratory rats weighing 200 to 300 g.

Toxicity by skin absorption: when administered by continuous contact with the bare skin for 24 hr or less produces death within 48 hr in half or more than half of a group of 10 or more rabbits tested at a dosage of 200 mg or less per kilogram of body weight.

Table 2. Chemical Group Classifications

Liquids	Solids	Gases
HP - Human poisons	HP - Human poisons	HP - Human poisons
Fl - Flammables	Fl - Flammables	Fl - Flammables
C - Corrosives	C - Corrosives	C - Corrosives
R - Reactives	R - Reactives	R - Reactives
V - Volatiles	BT - Amenable to BWT*	A - Highly toxic to aquatic life
F - Floaters	B - Biodegradeables	
BT - Amenable to BWT*	S - Solubles	
B - Biodegradeables	A - Highly toxic to aquatic life	
A - Highly toxic to aquatic life		

*Biological waste treatment.

Flammables (119)

Flammables are any liquid that have a flash point below 100°F (38°C). Any solid liable to spontaneous ignition in air, including solids that react with air or the moisture in air to produce extremely flammable products; and any solid liable to ignition in air by friction or slight heating, including solids that react with air or the moisture in air to produce flammable products.

Corrosives (119)

Corrosives are defined as any substance that significantly chemically attacks common metals or metal alloys, including ferrous metals. [This definition and the designations of specific chemicals as corrosive are from the Rice report (119). Rice utilized designations provided by the Department of Transportation where available. DOT defines a corrosive material as a "liquid or solid that causes visible destruction or irreversible alterations in human skin tissue at the site of contact, or in the case of leakage from its packaging, a liquid that has a severe corrosion rate on steel"; and "a liquid is considered to have a severe corrosion rate if its corrosion rate exceeds 0.250 inches per year on steel (SAE 1020) at a test temperature of 130°F.]

Volatiles (119)

All chemicals with vapor pressures greater than 1.3×10^3 Pa (10 mm Hg) at 10°C are defined as volatiles.

Floaters (119)

Floaters are all materials that will float on the surface of water in a spill situation and all chemicals with solubilities of less than 1% and specific gravities of less than 1.0.

Reactives (121)

Reactive materials are defined as those materials which in themselves or in contact with water are readily capable of detonation or of explosive decomposition or explosive reaction at normal temperatures and pressures and as

those materials which are sensitive to mechanical or localized thermal shock at normal temperatures and pressures.

Solubles (119)

Solubles are solids with solubilities in water of greater than 0.1% or 1000 ppm.

Solids or Liquids Amenable to Biological Treatment (48, 49, 109, 126)

These compounds are defined as those which, while not necessarily biodegradable, are amenable to biological waste treatment in that they can be accepted into biological waste treatment systems without causing adverse impact on treatment of the pollutants normally present. Compounds in this classification group would have to be fed to biological treatment systems at rates so as not to cause a toxic or inhibiting effect on the treatment process.

Biodegradables (48, 109, 126)

Compounds that can be degraded by microorganisms to normal biological end products, such as carbon dioxide and water, are considered to be biodegradable. Biochemical oxidation requires an acclimated seed of microorganisms and dilution of the chemical compounds to levels that will not be toxic or inhibitory to the microorganisms.

Compounds Highly Toxic to Aquatic Life (20)

Compounds that have an LC_{50} (concentration of material that is lethal to one-half of the test population of aquatic animals upon continuous exposure for 96 hr or less) of less than 1 mg/liter are considered to be highly toxic to aquatic life and include all compounds classified as X and A by EPA Classification of hazardous substances (20).

CLASSIFICATIONS

The toxic and hazardous substances classified as solids, liquids, or gases, as well as their chemical and physical characteristics, are given in Tables 3, 4, and 5 respectively. The physical state of the particular substance is based on the pure chemical form in the absence of information on its use at a particular plant. Some of the compounds listed as solids and gases may in reality exist in solutions with solvents and/or water. These compounds are identified in Tables 4 and 5 and may be listed under more than one physical state classification. Examples are phosphoric acid, sodium hydroxide, and formaldehyde. In the absence of data several compounds were grouped in the same categories as the chemical family. Assumed groupings are so noted in the tables.

In evaluating BMP programs the use and/or occurrence of the chemical at a particular facility has to be determined so that the appropriate chemical group can be defined. Some of the compounds are characterized by more than one group, whereas others are basically classified as solids or liquids since they do not have any of the special features of the chemical groups. In Tables 3, 4, and 5, the chemical compound under consideration is classified according to the appropriate chemical grouping or groupings. After the appropriate chemical group or groups have been determined, the approach presented in Section 5 can be used to determine which BMP alternatives are applicable as a function of the chemical group and the ancillary source.

Review of the classifications and the BMPs for the 302 compounds indicated that the number of chemical groups important to the evaluation and selection of BMPs depends on the nature of the specific BMPs. Less information will be required to identify BMPs for prevention and containment of a substance than in adequately define BMP alternatives for ultimate disposition of the substance. For example, the important properties to be considered when BMPs are evaluated for prevention and containment are the physical state, volatility, reactivity, and corrosiveness of the substances. When treatment and ultimate disposition BMPs are to be evaluated, important additional properties, which are unrelated to prevention and containment BMPs, should be considered. These properties include biodegradability, specific gravity, and aquatic toxicity.

Table 3. Liquid Group Classification[a]

Liquid	Poisonous to Humans	Flammable	Corrosive	Reactive	Volatile	Floater	Amenable to Biological Treatment	Biodegradeable	Highly Toxic to Aquatic Life
Acetaldehyde	-	X	-	-	X	-	X	X	-
Acetic acid	-	-	X	-	-	-	X	X	-
Acetic anhydride	-	-	X	X	-	-	X	X	-
Acetone cyanohydrin	X	-	-	-	-	-	X	X	X
Acetyl bromide	-	-	X	X	-	-	X	X	-
Acetyl chloride	-	X	-	X	X	-	X	X	-
Acrolein	X	X	-	X	X	-	X	X	X
Acrylonitrile	-	X	-	-	X	-	X	X	-
Allyl alcohol	X	X	-	-	X	-	X	X	-
Allyl chloride	X	X	-	-	X	X	X	X	-
Ammonium hydroxide	-	-	X	-	-	-	X	-	-
Amyl acetate	-	X	-	-	-	X	X	X	-
Aniline	X	-	-	-	-	-	X	X	-
Benzene	-	X	-	-	X	X	X	X	-
Benzonitrile	-	-	-	-	-	-	X	X	-
Benzoyl chloride	-	-	X	X	-	-	X	X	-
Benzyl chloride	-	-	x	-	-	-	X	X	-
Bis(chloromethyl) ether	X	-	-	-	X	-	X	X	ND
Bis(2-chloroisopropyl) ether	-	-	-	-	X	-	X[b]	X[b]	ND
Bis(2-chloroethoxy) methane	-[b]	-[b]	-[b]	-[b]	X[b]	-[b]	X	X	ND
Bis(2-chloroethyl) ether	X	-	-	-	X	-	X	X	ND
Bis(2-ethylhexy) phthalate	X	-	-	-	X	X	-	-	ND
Bromoform (tribromomethane)	-	-	-	-	-	-	-	-	ND
Butyl acetate	-	X	-	-	-	X	X	X	-
Butylamine	-	X	-	-	X	-	X	X	-
Butyl benzyl phthalate	-	-	-	-	-	-	X	X	-
Butyric acid	-	-	X	-	-	-	X	X	-
Carbon disulfide	-	X	-	-	X	-	-	-	-
Carbon tetrachloride	-	-	-	-	X	-	-	-	-
Chlordane	-	-	-	-	-	-	-	-	X
Chlorobenzene	-	X	-	-	-	-	X	X	-
Chlorodibromomethane	-	-	-	-	X	-	-	-	ND
Chloroethane	X	X	-	-	X	X	X	X	ND
2-Chloroethyl vinyl ether	-	X	-	-	X	-	X	X	ND
Chloroform	-	-	-	-	X	-	X	-	ND

[a]X denotes chemical is in this category, - denotes chemical is not in this category, ND denotes no data available.

[b]Assumed values, based on chemical groups of similar type substances.

Table 3. (Continued)

Liquid	Poisonous to Humans	Flammable	Corrosive	Reactive	Volatile	Floater	Amenable to Biological Treatment	Biodegradeable	Highly Toxic to Aquatic Life
2-Chlorophenol	X	-	-	-	-	-	X	X	-
4-Chlorophenyl phenyl ether	X[b]	-[b]	-[b]	-[b]	X[b]	-[b]	-	-	-
Chlorosulfonic acid	-	-	X	X	-	-	X	X	ND
Crontonaldehyde	X	X	X	-	X	X	X	X	-
Cyclohexane	-	X	-	-	X	X	X	X	X
Diazinon	-	-	-	-	-	-	-	-	ND
1,2-Dichlorobenzene	-	-	-	-	-	-	X	X	-
1,3-Dichlorobenzene	-	-	-	-	-	-	X	X	-
Dichlorobromomethane	-[b]	-[b]	-[b]	-[b]	-[b]	-	-	-	ND
1,1-Dichloroethane	-	X	-	-	X	-	X	X	ND
1,2-Dichloroethane	-	X	-	-	X	-	X	X	-
1,1-Dichloroethylene (vinylidene chloride)	-	X	-	-	X	-	-	-	ND
1,2-Dichloropropane	-	X	-	-	X	-	X	X	-
2,2-Dichloropropionic acid	-	-	X	-	-	-	-	-	ND
1,3-Dichloropropylene	X	X	-	-	X	-	X	X	-
Dichlorovos	-	-	X	-	-	-	-	-	X
Diethylamine	-	X	X	-	X	X	X	X	ND
Diethyl phthalate	-	-	-	-	X	-	X	X	ND
Dimethyl phthalate	-	-	-	-	X	-	X	X	ND
Di-n-butyl phthalate	X	-	-	-	X	-	X	X	ND
Di-n-octyl phthalate	-	-	-	-	X	-	X	X	ND
Disulfoton	X	-	-	-	-	-	-	-	ND
Dodecylbenzenesulfonic acid	-	-	X	-	-	-	X	X	ND
Endrin aldehyde	-	-	-	-	-	-	-[b]	-[b]	X
Epichlorohydrin	X	X	X	-	-	-	X	X	-
Ethion	-	-	-	-	-	-	-	-	X
Ethylbenzene	-	X	-	-	X	X	X	X	-
Ethylene dibromide	X	-	X	-	X	-	X	X	-
Ethylenediamine	-	X	-	-	-	-	X	X	-
Formic acid	-	-	X	-	-	-	X	X	-
Furfural	-	-	X	-	-	-	X	X	-
Hexachlorobutadiene	-	-	-	-	-	-	X	-	ND
Hydrochloric acid	-	-	X	-	-	-	X	-	-
Hydrofluoric acid	-	-	X	-	-	-	X	-	-
Isophorone	-	-	-	-	-	X	X	X	ND
Isoprene	-	X	-	-	X	X	X	X	-
Malathion	-	-	-	-	-	-	-	-	X

Table 3. (Continued)

Liquid	Poisonous to Humans	Flammable	Corrosive	Reactive	Volatile	Floater	Amenable to Biological Treatment	Biodegradeable	Highly Toxic to Aquatic Life
Methylene chloride (dichloromethane)	-	-	-	-	X	-	-	-	ND
Methyl methacrylate	-	X	-	-	X	X	X	X	-
Mevinphos	X	-	X	-	-	-	-	-	X
Naphthenic acid	-	-	X	-	-	-	X	X	-
Nitric acid	-	-	X	-	-	-	X	-	-
Nitrobenzene	X	-	-	-	-	-	X	X	-
N-nitrosodimethylamine	-	-	-	-	X	-	-	-	ND
N-nitrosodi-n-propylamine	-[b]	-[b]	-[b]	-[b]	X[b]	-[b]	-	-	ND
Parathion	X	-	-	-	-	-	X	X	X
Phosphorous oxychloride	-	-	X	X	-	-	X	X	-
Phosphorous trichloride	-	-	X	X	X	-	X	-	-
Polychlorinated biphenyls (PCBS)	-	-	-	-	-	-	-	-	X
Propionic acid	-	-	X	-	-	-	X	X	-
Propionic anhydride	-	-	X	X	-	-	X	X	-
Propylene oxide	-	X	-	-	X	-	X	X	ND
Quinoline	-	-	-	-	-	-	-	-	-
Styrene	-	X	-	-	X	X	X	X	-
Sulfuric acid	-	-	X	-	-	-	X	-	-
Sulfur monochloride	-	-	X	X	-	-	X	-	-
2,4,5-Trichlorophenoxy acetic acid with amines	-	X	-	-	X	-	-	-	-
1,1,2,2-Tetrachloroethane	-	-	X	X	X	-	-	-	ND
Tetrachloroethylene	-	-	-	-	X	-	-	-	ND
Tetraethyl pyrophosphate	X	-	-	X	-	-	-	-	ND
Toluene	-	X	-	-	X	X	X	X	-
1,2-trans-Dichloroethylene	-	-	-	-	X	-	X	X	ND
1,2,4-Trichlorobenzene	-	-	-	-	-	-	X	X	ND
1,1,1-Trichloroethane	-	-	-	-	X	-	X	X	ND
1,1,2-Trichloroethane	-	-	-	-	X	-	X	X	-
Trichloroethylene	-	-	-	-	X	-	X	X	ND
Triethylamine	-	X	X	-	X	X	X	X	-
Vinyl acetate	-	X	-	-	-	X	X	X	-
Vinyl chloride (chloroethylene)[b]	-	X	-	-	X	X	X	X	ND
Xylene	-	X	-	-	-	X	X	X	-

Table 4. Solids Group Classification[a]

Solid	Poisonous to humans	Flammable	Corrosive	Soluble	Amenable to Biological Treatment	Reactive	Biodegradable	Highly Toxic to Aquatic Life
Acenaphthylene	-	-	-	-	-	-	-	-
Acenapthene	-	X	-	-	-	-	-	ND
Adipic acid	-	-	X	X	X	-	X	-
Aldrin	X	-	-	X	-	-	-	X
Aluminum sulfate	-	-	-	X	X	-	-	-
Ammonium acetate	-	-	-	X	X	-	X	-
Ammonium benzoate	-	-	-	X	X	-	X	-
Ammonium bicarbonate	-	-	-	X	X	-	-	-
Ammonium bifluoride	-	-	-	X	X	-	-	-
Ammonium bisulfite	-	-	-	X	X	-	-	-
Ammonium carbamate	-	-	-	X	X	-	X	-
Ammonium carbonate	-	-	-	X	X	-	-	-
Ammonium chloride	-	-	-	X	X	-	-	-
Ammonium citrate dibasic	-	-	-	X	X	-	X	-
Ammonium fluoborate	-	-	-	X	X[b]	-	-	-
Ammonium fluoride	-	-	-	X	X	-	-	-
Ammonium oxalate	-	-	-	X	X	-	X	-
Ammonium silicofluoride	-	-	-	X	X[b]	-	-	-
Ammonium sulfamate	-	-	-	X	X	-	X	-
Ammonium sulfide[c]	-	X	-	X	X	-	-	-
Ammonium sulfite	-	-	-	X	X	-	-	-
Ammonium tartrate	-	-	-	X	X	-	X	-
Ammonium thiocyanate	-	-	-	X	X	-	X	-
Ammonium thiosulfate	-	-	-	X	X	-	-	-
Anthracene	-	-	-	-	-	-	-	ND
Antimony	X	-	-	-	-	X	-	-
Arsenic	X	-	-	-	-	-	-	-
Asbestos	-	-	-	-	ND	ND	ND	ND
1,2-Benzanthracene	-[b]	-	-	-	-	-	-	ND
Benzidine	-	-	-	X	X	-	X	ND
3,4-Benzofluoranthene	-	-	-	-	-	-	-	ND
11,12-Benzofluoranthene	-	-	-	-	-	-	-	ND
Benzoic acid	-	-	-	-	X	-	X	-
3,4-Benzopyrene	-	-	-	-	-	-	-	ND

[a]X denotes chemical is in this category, - denotes chemical is not in this category, ND denotes no data available.

[b]Assumed values, based on chemical groups of similar type substances.

[c]Normally exists as liquid solution.

Table 4. (Continued)

Solid	Poisonous to humans	Flammable	Corrosive	Soluble	Amenable to Biological Treatment	Reactive	Biodegradable	Highly Toxic to Aquatic Life
1,12-Benzoperylene	-	-	-	-	-	-	-	ND
Beryllium	X	-	-	-	-	-	-	-
α-BHC (hexachlorocyclohexane)	X	-	-	-	X	-	X	X
β-BHC (hexachlorocyclohexane)	X	-	-	-	X	-	X	X
Δ-BHC (hexachlorocyclohexane)	X	-	-	-	X	-	X	X
4-Bromophenyl phenyl ether	-	-	-	-	-	-	-	ND
Cadmium	-	-	-	-	-	-	-	-
Calcium carbide	-	X	-	X	-	X	-	-
Calcium dodecylbenzenesulfonate	-	-	-	X	X[b]	-	X[b]	-
Calcium hydroxide[c]	-	-	-	X	X	-	-	-
Calcium hypochlorite	-	-	X	X	X	-	-	-
Calcium oxide	-	-	-	X	X	X	-	-
Captan	-	-	-	X	-	-	-	X
Carbaryl	-	-	-	-	-	-	-	-
Carbofuran	ND	ND	ND	ND	ND	ND	ND	X
2-Chloronapthalene	-	-	-	-	X	-	X	ND
Chromium	-	-	-	-	-	-	-	-
Chrysene	-[b]	-[b]	-[b]	-	-	-[b]	-	ND
Cobaltous bromide	-	-	-	X	-	-	-	-
Cobaltous formate	-	-	-	X	-	-	-	-
Cobaltous sulfamate	-	-	-	X	-	-	-	-
Coumaphos	X	-	-	-	-[b]	-	-[b]	X
Copper	-	-	-	X	X	-	-	X
Cresol	X	-	-	-	X	-	X	ND
Cyanide	X	-	-	-	X	X	X	X
1,4-Dichlorobenzene	-	-	-	-	X	-	X	-
2,4-Dichlorophenoxy acetic acid	-	-	-	X	-	-	-	-
2,4-Dichlorophenoxy acetic acid esters	-	-	-	X	-	-	-	-
4,4'-DDD	X	-	-	-	-[b]	-	-[b]	X[b]
4,4'-DDE	X	-	-	-	-[b]	-	-[b]	X[b]
DDT	X[b]	-	-	X	-	-	-	X
1,2,5,6-Dibenzanthracene	-[b]	-[b]	-[b]	-[b]	-	-[b]	-	ND
Dicamba	-	-	-	X	-	-	-	-
Dichlorbenil	-	-	-	X	-	-	-	-
Dichlone	-	-	-	X	-	-	-	X
3,3'-Dichlorobenzidine	-	-	-	-	X	-	X	ND
2,4-Dichlorophenol	-	-	-	-	X	-	X	ND

Table 4. (Continued)

Solid	Poisonous to humans	Flammable	Corrosive	Soluble	Amenable to Biological Treatment	Reactive	Biodegradable	Highly Toxic to Aquatic Life
Dieldrin	X	-	-	X	-	-	-	X
2,4-Dimethylphenol	-	-	-	-	X	-	X	ND
Dinitrobenzene	-	-	-	X	-	-	-	-
4,6-Dinitro-o-cresol	X	-	-	-	X	-	X	ND
2,4-Dinitrophenol	-	-	-	-	X	X	X	ND
2,4-Dinitrotoluene	-[b]	-	-	-	X	-	X	-
2,6-Dinitrotoluene	-[b]	-[b]	-[b]	-[b]	X	-[b]	X	-
1,2-Diphenylhydrazine	-[b]	-[b]	-[b]	-[b]	-	-[b]	-	ND
Diquat	-	-	-	X	-	-	-	-
Diuron	-	-	-	X	-	-	-	-
Chlorpyrifos	-	-	-	X	-	-	-	ND
Endosulfan sulfate	-	-	-	X	-	-	-	X
α-Endosulfan	-	-	-	X	-	-	-	X
β-Endosulfan	-	-	-	X	-	-	-	X
Endrin	-	-	-	X	-	-	-	X
EDTA	-	-	-	-	X[b]	-	X[b]	-
Ferric ammonium citrate	-	-	-	X	X	-	X	-
Ferric ammonium oxalate	-	-	-	-	X	-	X	-
Ferric chloride[c]	-	-	X	X	X	-	-	-
Ferric fluoride	-	-	-	X	X	-	-	-
Ferric nitrate	-	-	-	X	X	-	-	-
Ferric sulfate	-	-	-	X	X	-	-	-
Ferrous ammonium sulfate	-	-	-	X	X	-	-	-
Ferrous chloride	-	-	-	X	X	-	-	-
Ferrous sulfate	-	-	-	X	X	-	-	-
Fluroanthene	-	-	-	-	-	-	-	ND
Fluorene	-	-	-	-	-	-	-	ND
Fumaric acid	-	-	X	X	X	-	X	-
Guthion	-	-	-	X	X	-	X	X
Heptachlor	X	-	-	X	-	-	-	X
Heptachlor epoxide	X	-	-	-	-[b]	-	-[b]	ND
Hexachlorobenzene	-	-	-	-	-	-	-	ND
Hexachlorocyclopentadiene	-	-	-	-	X	-	-	X
Hexachloroethane	-	-	-	-	-	-	-	ND
Indeno (1,2,3-c,d) pyrene	-[b]	-[b]	-[b]	-[b]	-	-[b]	-	ND
Isopropanolamine dodecylbenzenesulfonate	-	-	-	X	X[b]	-	X[b]	ND

Table 4. (Continued)

Solid	Poisonous to humans	Flammable	Corrosive	Soluble	Amenable to Biological Treatment	Reactive	Biodegradable	Highly Toxic to Aquatic Life
Kelthane	-	-	-	-	X	-	X	-
Kepone	X	-	-	-	-	-	-	X
Lead	-	-	-	-	-	X	-	-
Lindane	-	-	-	X	-	-	-	X
Maleic acid	-	-	-	X	X	-	X	-
Maleic anhydride	-	-	-	X	X	X	X	-
Mercaptodimethur	X	ND	ND	-	X	-	X	X
Mercury	X	-	-	-	-	X	-	X
Methoxychlor	-	-	-	X	-	-	-	X
Methyl parathion	X	-	-	X	X	-	X	X
Naled	-	-	X	X	-	X	-	X
Napthalene	-	-	-	-	X	-	X	-
Nickel	-	-	-	-	-	-	-	-
2-Nitrophenol	X	-	-	X	X	-	X	-
4-Nitrophenol	X	-	-	X	X	-	X	-
N-nitrosodiphenylamine	X	-	-	-	-	-	-	ND
Nitrotoluene	X	-	-	-	X	X	X	ND
Parachlorometa cresol	-	-	-	X	X	-	X	ND
Paraformaldehyde	-	-	-	X	X	X	X	-
Phenanthrene	-	-	-	-	X	-	X	ND
Pentachlorophenol	X	-	-	-	-	-	-	X
Phenol[c]	X	-	-	X	X	-	X	-
Phosphoric acid[c]	-	-	X	X	X	-	-	-
Phosphorus	-	X	-	-	X	-	-	-
Phosphorous pentasulfide	-	X	-	X	X	-	X	-
Potassium hydroxide[c]	-	-	-	X	X	-	-	-
Potassium permanganate	-	-	-	X	X	-	-	-
Propargite	ND	ND	ND	-	ND	ND	-	ND
Pyrene	-[b]	-[b]	-[b]	X	-[b]	-	-[b]	ND
Pyrethrins	-	-	-	X	-	-	-	-
Resorcinol	-	-	-	X	-	-	-	-
Selenium	-	-	-	-	-	-	-	-
Silver	-	-	-	-	ND	-	-	X
Sodium	-	X	-	X	X	X	-	-
Sodium bifluoride	-	-	-	X	X	-	-	-
Sodium bisulfite	-	-	-	X	X	-	-	-

Table 4. (Continued)

Solid	Poisonous to humans	Flammable	Corrosive	Soluble	Amenable to Biological Treatment	Reactive	Biodegradable	Highly Toxic to Aquatic Life
Sodium dodecylbenzenesulfonate	-	-	-	X	X[b]	-	X[b]	-
Sodium fluoride	-	-	-	X	X	-	-	-
Sodium hydrosulfide	-	-	-	X	X	-	-	-
Sodium hydroxide[c]	-	-	-	X	X	-	-	-
Sodium hypochlorite[c]	-	-	-	X	X	-	-	-
Sodium methylate	-	-	-	X	X	X	X	-
Sodium nitrite	-	-	-	X	X	-	-	-
Sodium phosphate dibasic	-	-	-	X	X	-	-	-
Sodium phosphate tribasic	-	-	-	X	X	-	-	-
Strychnine	X	-	-	-	-	-	-	X
Thallium	X	-	-	X	ND	X	ND	-
2,3,7,8-Tetrachlorodibenzo-p-dioxin (TCDD)	X	-	-	-	-	-	-	ND
Toxaphene	-	-	-	X	-	-	-	X
Trichlorfon	-	-	-	X	-	-	-	X
2,4,6-Trichlorophenol	-	-	-	-	X	-	X	X
2,4,5-Trichlorophenoxy acetic acid	X	-	-	-	-	-	-	-
2,4,5-Trichlorophenoxy acetic acid, esters	-	-	-	-	-	-	-	-
2-(2,4,5-Trichlorophenoxy) propanoic acid	-	-	X	-	-[b]	-	-[b]	X
2-(2,4,5-Trichlorophenoxy) propanoic acid esters	-	-	X	-	-	-	-	X
2,4,5-Trichlorophenoxy acetic acid, sodium salt	-	-	-	X	-	-	-	X
Triethanolamine dodecylbenzenesulfonate	-	-	-	X	X[b]	-	X[b]	-
Uranyl acetate (radioactive)	-	-	-	X	-	-	-	-
Uranyl nitrate (radioactive)	-	-	-	X	-	-	-	-
Vanadium pentoxide	-	-	-	X	-	-	-	-
Vanadyl sulfate	-	-	-	X	-	-	-	-
Xyleneol	-	-	-	X	X	-	X	-
Zectran (Mexacarbate)	X	-	-	X	-[b]	-	-[b]	-
Zinc	-	-	-	X	X	X	-	-
Zirconium nitrate	-	-	-	X	-	-	-	-
Zirconium potassium fluoride	-	-	-	X	-	-	-	-
Zicronium sulfate	-	-	-	X	-	-	-	-
Zicronium tetrachloride	-	-	X	X	-	X	-	-

Table 5. Gases Group Classification[a]

Gas	Poisonous to Humans	Flammable	Corrosive	Reactive	Highly Toxic to Aquatic Life
Ammonia	-	-	X	-	-
Chlorine	X	-	-	-	X
Cyanogen chloride	X	X	-	-	X
Dichlorodifluoromethane	-	-	-	-	-
Dimethylamine	-	X	X	-	-
Formaldehyde[b]	-	X	-	-	-
Hydrogen sulfide	X	X	-	-	-
Methyl bromide	X	-	-	-	-
Methyl chloride	-	X	-	-	-
Methyl mercaptan	-	X	X	-	-
Monoethylamine	-	X	X	-	-
Monomethylamine	-	X	X	-	-
Nitrogen doxide	X	-	-	X	-
Phosgene	X	-	-	X	-
Trichlorofluoromethane	-	-	-	-	-
Trimethylamine	-	X	X	-	-

[a]X denotes chemical is in this category, - denotes chemical is not in this category, ND denotes no data available.

[b]Normally exists in liquid solution.

SECTION 5

METHODS FOR EVALUATING BMP PROGRAMS AND PRESCRIBING BMP ALTERNATIVES

This section provides both industry and NPDES permitting authorities with guidance on developing BMPs and evaluating BMP programs. The measure of the success of the BMP program is its effectiveness in preventing environmental incidents. Certain minimal requirements are essential to a good BMP program. Methods for evaluating BMP programs are presented in this section to aid the user in making BMP decisions. Although this information will be useful to permittees and permitting authorities, it cannot be used as a substitute for sound engineering judgement and knowledge of the particular circumstances of the facility under consideration.

EVALUATION OF A BMP PROGRAM

A company's BMP program may be evaluated by the permitting authority for a number of reasons, including a recent spill of toxic and/or hazardous substances to navigable waters, a history of incidents, a citizens complaint, a fishkill, or an application for a renewed or a new NPDES discharge permit. Since the extent of practices utilized at a particular site is directly related to factors such as plant size and location, topography, specific chemicals, ancillary sources, water quality impacts, and quantity of materials on-site, there may be differences in advanced BMPs used by facilities. <u>However, all BMP programs should include the minimum requirements of the base-line BMPs and of the advanced BMPs where necessary</u>. A BMP program should be reviewed for these requirements. Although this study reviews a great number of the BMPs currently used by industry, there may be others that are acceptable in some instances. These practices would have to be evaluated by the user for effectiveness and applicability.

A step-wise approach has been developed for the evaluation of a BMP program, and is shown in Fig. 1. Figure 1 must be used in conjunction with Table 6, which lists the questions associated with each block and the aids recommended for reaching a decision on whether to accept or reject the BMP program.

Minimum Requirements

The minimum requirements of a BMP program are listed in Table 7. The BMP program should be put together and described in an orderly narrative document format and should be reviewed by the plant engineering staff. A description of the facility, including the type of plant and the products it manufactures, should be included in the document and a map should be given showing the location of the facility and the adjacent receiving waters. The document should include a statement of the objectives of the BMP program, including the prevention of the release of toxic and hazardous substances to the receiving waters. An evaluation or description of the potential risks of a spill from the plant to the receiving water should be included and should identify any sources that, in the event of a spill, could result in discharge to the receiving water. A final requirement is that all the base-line BMPs discussed in Section 3 and listed in Table 7 be addressed to some degree in the document. The base-line BMPs are primarily procedures for certain events and/or operations. They are broadly applicable to all industries and would be included in any effective BMP program. If any one of these items is not in the program, the reason for the omission should be explained. The BMP program should be considered as inadequate if all the requirements are not fulfilled or until reasonable explanations are given for the omission.

Questions for Evaluating Minimum Requirements in BMP Programs

The following list of questions is provided to assist the document user in evaluating whether the minimum requirements of a BMP program have been met.

1. Does the facility have a BMP program in a narrative form?
2. Has the BMP program been reviewed by the responsible facility officials and plant engineers?
3. Was the BMP program developed by the engineering staff?
4. Who should be contacted for further technical details on the BMP programs?
5. Was the program submitted as part of the facility's current NPDES permit application?
6. Has the BMP program been implemented within one year of the date of the facility's current NPDES permit?
7. Has the BMP program been amended since its initial development?
8. Is the BMP program readily available for review?
9. Does the overall program appear to be comprehensive, understandable, and well organized?
10. Is the senior engineer or another technical person at the facility familiar with the program, its implementation, status, and effectiveness?
11. Are the people trained in BMP use?

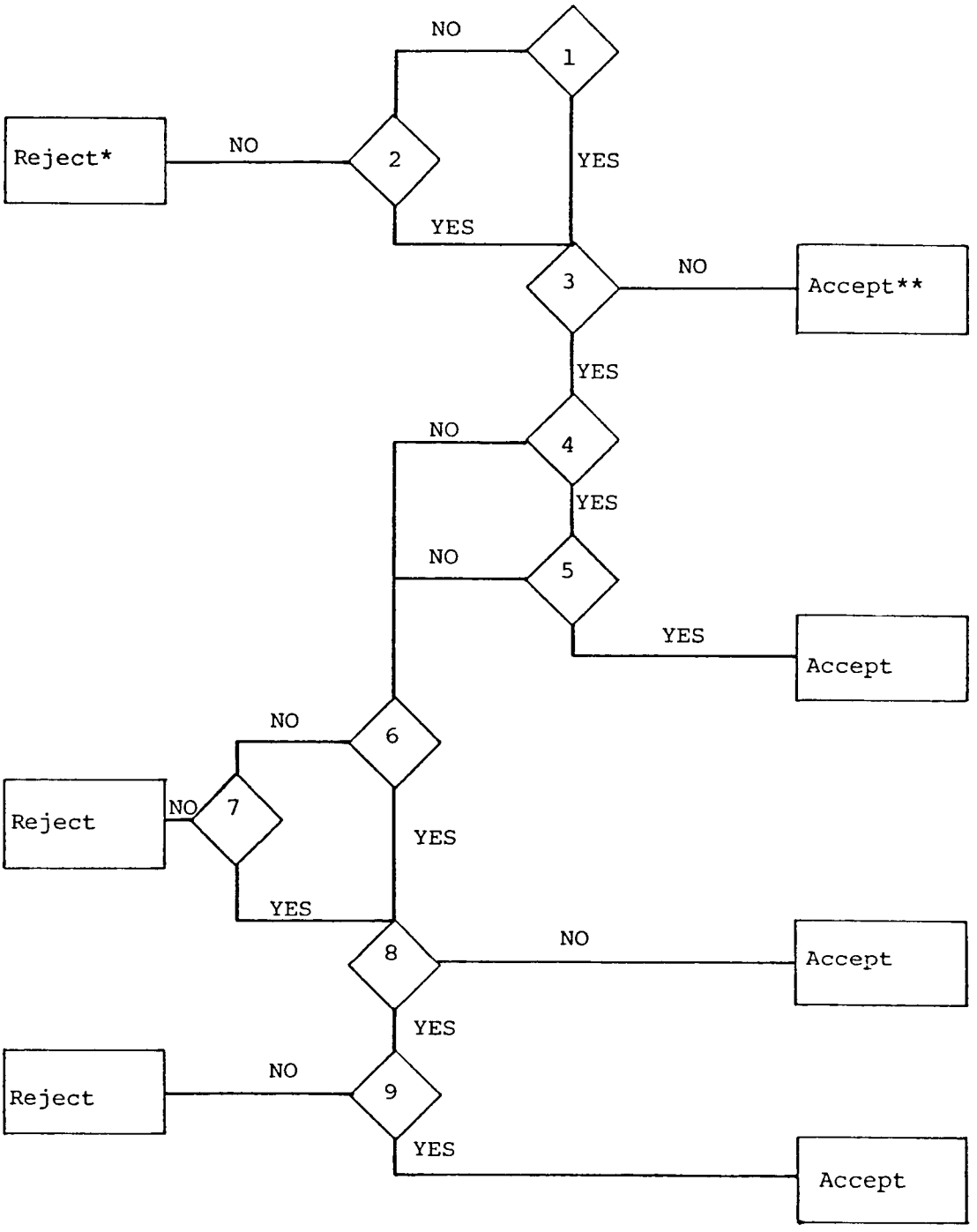

*Rejection would require company to modify program satisfactorily and then resubmit.

**Acceptance always implies that acceptance is subject to review if the BMP program is changed, if the sources subject to BMPs are changed, or if incidents occur.

Fig. 1. Decision Tree for BMP Program Evaluation
(To be used in conjunction with Table 6)

Table 6. Questions and Decision Aids Relative to Decision Tree Shown in Fig. 1

Block No.	Question	Decision Aid
1	Does BMP program fulfill minimum requirement?	Use Table 7 for requirements; use question for evaluating minimum requirements in BMP program
2	Does company satisfactorily justify less than minimum BMP program requirements?	Primary responsibility of company to satisfy user
3	Does company have history of incidents?	Review historical spill data from company and in EPA and state files
4	Are reasons for the spill(s) known?	Review available incident analyses and data from company, EPA, and state files
5	Have satisfactory corrective actions been taken to minimize risk of repeat?	Primary responsibility of company to satisfy user through documentation, site visits, incident analyses
6	Are base-line BMPs adequate?	Use questions in text for evaluating base-line BMPs
7	Are satisfactory changes to base-line BMP program being made?	Primary responsibility of company to to satisfy user
8	Are advanced BMPs included in program or needed?	Review incident analyses; use Table 8 for advanced-BMP alternatives based on industry practice; consider potential water quality impact; use questions in text for evaluating the impact on the water quality
9	Are advanced BMPs in the program satisfactory?	Use Table 8 for advanced-BMP alternatives; use questions in text for evaluating advanced BMPs

Table 7. Minimum Requirements of a BMP Program

Statement of facility policy

Narrative document format

Reviewed by plant engineering staff

Description of facility

Statement of company objectives of the BMP program

Evaluation of risks of potential spills

Base-line BMPs

- Spill Control Committee
- Spill reporting
- Material inventory
- Employee training
- Security
- Visual inspection
- Preventive maintenance
- Good housekeeping
- Materials compatibility

12. Is there a description of the plant facility with a location map? Are the adjacent receiving waters, outfall loations, and drainage patterns shown?
13. Does the BMP program state the objectives for control of toxic and hazardous substances?
14. Does the BMP program include an evaluation of the potential risks of spills from the various locations of toxic and hazardous substances?
15. When a reasonable potential for a spill exists, are the quantity, rate of flow, and predicted direction of flow described?
16. Does the BMP program description include past spills, causes, containment and mitigation steps utilized, and revisions to the BMP program or spill plan to prevent recurrence?
17. What are the ancillary sources associated with the various locations of toxic and hazardous substances?
18. Does the plant have a Spill Prevention and Countermeasure Plan (SPCC)?
19. What base-line BMPs are identified in the BMP program (see Fig. 1)? Which base-line BMPs are not mentioned?
20. What BMPs or spill prevention and containment measures are mentioned in the SPCC plan?
21. Is there a recognition of the need to periodically review and update the facility's BMP program as manufacturing conditions and applicable federal and state regulations change?

Assessment of Incident History

As discussed previously, an important criterion in determining the effectiveness of a BMP program is the history of incidents at the plant. A history of no incidents suggests that the practices and procedures at the site are effective. Review of past incident data should be part of every BMP program evaluation. If the BMP program meets the minimum requirements and the plant does not have a history of incidents, the BMP program generally would be considered to be adequate.

For a plant site with a history of incidents it is important to investigate the reasons for the spills and the response of the company in minimizing the potential of a recurrence. Are the reasons for the spills known? A review should be made of available incident or spill analyses, as well as other data provided by the company or available from EPA or state files. What was the impact on water quality? Was it minor or substantial? Has the facility demonstrated good-faith efforts to prevent a recurrence. This aspect should have bearing on the company's response and should be considered in judging the adequacy of the corrective actions taken. An example of corrective actions that can be taken concerns a company that had several incidents in which sulfuric acid, used as pickling acid, was released from a badly corroded pipeline in an old pipeway on the riverbank. Sulfuric acid is the only hazardous substance handled in bulk at the plant. Following the last incident, the company replaced the plant manager, hired a contractor to perform thickness testing on their acid tanks, installed redundant level alarms on the tanks, replaced and rerouted the pipeline away from the riverbank,

and instituted a visual inspection program and operator training in spill prevention and control.

Did the company take satisfactory corrective action to prevent a recurrence? The company should have the primary responsibility for satisfying the user through documentation, site visits, or incident analyses that the corrective action is adequate and the probability of another incident is small. The user may consider accepting the program at this point in the evaluation if satisfied that it can be effective. Otherwise, further evaluation is required.

Evaluation of Base-Line BMPs

The next step, assuming that all the minimum requirements for a BMP program have been met, is to evaluate the adequacy of the base-line BMPs. At this point the user must determine whether changes are required in the base-line BMP program. For example, a facility may have a visual inspection program; however, the frequency of inspection may be inadequate if a spill, which should have been predetermined and corrected, was not identified in the inspection and reported according to predetermined spill reporting procedures.

For a plant with a good pollution control program the BMP program would probably include minimum requirements and possibly some of the less expensive advanced BMPs, such as those associated with prevention and/or cleanup. However, the adequacy of the BMP program can be evaluated only after considerable review of the plant's program relative to the BMP program and the spill control plan, spill (incident) history, the materials inventory (quantity and location), the potential spill impact on the receiving water, the effectiveness of the current program, and the cost to implement a detailed control and countermeasure program. Again, the company should bear the responsibility for demonstrating that any inadequacies in the base-line BMP portion of the plan have been or are being corrected.

To assist the user in evaluating the extent and effectiveness of the base-line BMPs, the following list of questions is provided. These questions are not to be used to evaluate a BMP program by tallying the number of "Yes" or "No" answers, but rather are to be used as a guide in assessing the extent and effectiveness of the base-line BMPs.

Spill Control Committee --

1. Is there a clear statement of the management's policy with respect to BMP-related matters?
2. Is there a clear statement of who is responsible for BMP-related matters?
3. Is the responsible party aware of his or her BMP-related responsibilities?
4. Has a spill control committee been assigned responsibilities for the BMP program? What are the Committee's duties (spills, safety, environmental control)?

5. Is a list of personnel responsible for spill control (i.e., foreman, area supervisor, department manager, safety coordinator, environmental control coordinator) provided?
6. Are the appropriate office and home telephone numbers of the committee indicated?
7. Are these personnel available at all times? Are backup people listed with phone numbers?

Spill Reporting

1. Is there a procedure for immediate notification of incidents to plant personnel (i.e., personnel names, phone numbers) in order of priority?
2. Are telephone numbers provided for the appropriate governmental regulating agencies (Federal, state, and local) which are to be notified in the event of a release of toxic and hazardous material to the receiving water?
3. Who is responsible for reporting the spill?
4. Is there a standard format for submitting a report for internal review on a spill or near-spill?
5. Is this report adequate (i.e., area of spill, volume defined, duration, control measures, countermeasures used)?
6. Who reviews the report?
7. Have any revisions been incorporated in the BMP program based on these reports?
8. Is there a standard format for reporting to the appropriate governmental regulating agency spills that reach the receiving water?
9. Is there a listing of others to be contacted in the event of a spill such as the Public Water Supply agency, the Fish and Game Commission, and the municipal sewage treatment plant?
10. Is a communication system available to immediately notify appropriate plant personnel of a spill?
11. What is the communication system (radio, telephone, public address system, or an alarm system)?
12. Is the communication system affected by power outages?
13. Is there direct communication between both ends of a transfer operation such as loading and unloading of tanks and rail cars or to and from storage areas?
14. Is there a plant warning system that utilizes alarms to alert personnel of an unexpected release of material?
15. Is the alarm system code posted and/or is it familiar to all plant personnel?
16. Do alarm systems such as high-liquid-level alarms for notification of impending spills adequately alert plant personnel?
17. Are these alarms or signals displayed on a central control panel so that immediate communication to the supervisor or operator is achieved?
18. Are communication signals such as indicator lights, horns, sirens, or combinations of these used at the plant?

Materials Inventory System

1. Is there an inventory describing quantity and location of toxic and hazardous compounds on the plant site?
2. Are locations clearly indicated on plant layout drawings and/or plot plans?

3. Is the direction of flow of spilled materials predicted and clearly indicated?
4. Is the receiving water in the area clearly shown in the plot plans?
5. Are there any losses of material (quantity and location) identified in the inventory?
6. Are new materials and products tested for material compatability with other chemicals used at the facility?
7. Are these materials tested or analyzed for their impact on the environment?
8. Has the aquatic toxicity been evaluated for these materials?
9. Has the impact of potential spills on the process wastewater treatment system or municipal treatment system been evaluated?
10. Have safety and handling hazards been evaluated?

Employee Training Programs

1. Is there an employee training program relative to the BMP program and spill prevention and control?
2. Is the program coordinated with others programs such as safety and fire protection or is it a separate program?
3. Who is responsible for carrying out this program?
4. What techniques (i.e., meetings, films, lectures, spill drills, job performance ratings, posters, newsletters, posting of individual's plant performance) are utilized to ensure education of plant personnel relative to BMPs?
5. How frequently are meetings held?
6. Are employees, picked at random, familiar with BMP program objectives?
7. Are plant area supervisors and operators familiar with interactions between their operations and other process areas?

Visual Inspections

1. Are visual inspection programs addressed in the BMP program?
2. Who performs these inspections (i.e., security, personnel, supervisors)?
3. Do these visual inspections include all the ancillary sources and the locations of potential incidents?
4. What is the frequency of visual inspection for all the sources of potential incidents?
5. Are there internal and external visual inspections for material storage tanks? How often?
6. Who performs these inspections (i.e., security, personnel, supervisor)?
7. Are reports submitted on each inspection?
8. Do these reports include recommendations for corrective action?
9. Does the Spill Control Committee review these reports?
10. Is the frequency of inspections reasonable (see Table 3.2 for bulk storage tanks)?
11. Was the frequency of visual inspections increased after an incident? If not, were any other actions taken after the incident?

Preventive Maintenance

1. Are preventive maintenance procedures covered in the BMP program?
2. Have additional preventive maintenance procedures, beyond those normally used for safety and for minimizing downtime, been discussed relative to BMPs and spill prevention and control?

3. What are these procedures?
4. How often are they conducted?
5. Do preventive maintenance procedures cover all the potential sources of incidents of toxic and hazardous substances?
6. Are there records of preventive maintenance repairs, lubrications, etc.?
7. Is there a replacement schedule for vessels and tanks based on age and on the corrosiveness of the material used?

Good Housekeeping

1. Is good housekeeping included in the BMP program?
2. What is the general condition of the facility relative to orderliness, appearance, adequate space in work areas, garbage and rubbish pickup, and storage of chemicals?
3. Are walkways and passageways easily accessible, safe, and free of protruding objects and equipment?
4. Are building interiors and equipment kept in neat and orderly condition?
5. Is there any evidence of drippings from equipment or machinery?
6. Is cleanup equipment properly stored away in appropriate locations?
7. Is there evidence of dust in the air or on the floor?
8. Are there regular housekeeping inspections?
9. Are publicity posters, bulletin boards, and employee publications used for good housekeeping programs?
10. Is physical and mechanical cleanup equipment readily available?
11. Is the material involved in small incidents recovered or flushed to the sewer with water?
12. Are packaged and bagged chemicals properly stored in storage areas?
13. Are dry cleaning operations used for solids?

Material Compatability

1. Is material compatability treated in the BMP program?
2. How old is the facility?
3. Was the original design of the facility reviewed by the Spill Control Committee or reviewed relative to material compatability and spill control?
4. Are new designs and plant expansions, involving the use of existing vessels and pipelines for other than the original chemical for which they were designed, reviewed relative to materials compatability and spill control?
5. Is material compability considered for mitigation and/or ultimate disposition operations?
6. Are the wastes being disposed of at a particular location compatible?

Security

1. What form of security system is used at the facility?
2. Is the plant protected from vandalism by fencing and locked entrance gates?
3. Are entrance gates to the plant guarded by security personnel?
4. Is television surveillance used?
5. How often is the plant patrolled by security personnel?
6. Are these patrols by car or by foot?

7. Are chemical storage tanks, drums, valves, and/or pumps locked?
8. Are starter controls on all transfer pumps from tanks and vessels locked or electrically isolated in the off position?
9. Are loading and unloading connections from pipelines and tanks capped or blank flanged when not in service?
10. Is there adequate lighting around the facility?
11. Are there vehicular traffic control regulations (i.e., a designated route for trucks, etc.)?

Evaluation of Advanced BMPs

At this point in the evaluation the user should be able to assess the extent and adequacy of the base-line BMPs incorporated in the program. The next step in the evaluation would be to evaluate any advanced BMPs in the program. If no advanced BMPs are included, consideration should be given to the potential water quality impact and the effectiveness of the present base-line BMPs before a decision is made on acceptability of the BMP program.

As discussed previously, a history of spills will indicate an obvious ineffectiveness of the BMP program that may be due to inadequate advanced BMPs. The advanced BMPs should be reviewed as to their effectiveness in preventing spills to receiving waters. If there is no history of spills, if the minimum requirements are met, and if the base-line BMPs and any advanced BMPs are judged to be adequate, the BMP program would be acceptable. If the BMP program is found to be inadequate, then revisions to the base-line BMPs and/or new or improved advanced BMPs may be recommended.

To assist the user in evaluating advanced BMPs and to aid in prescribing additional ones should the program be found to be ineffective, a method of identifying the advanced BMP alternatives has been developed. Table 8 summarizes advanced-BMP alternatives as a function of ancillary source and chemical grouping. The data in Table 8 are based on information derived from the literature, industrial contacts, technical bulletins, and experience, and were developed to facilitate the identification of applicable BMPs for the 5 ancillary sources and the 302 toxic and hazardous substances. BMPs are grouped into categories of prevention, containment, mitigation, and ultimate disposition. Mitigation is subdivided into cleanup and treatment. These BMPs are described in Section 3. Chemical classification groups are defined and discussed in Section 4. The chemical groups for a particular substance can be determined by referring to Tables 3—5. Since the BMP alternatives for the first three of the five ancillary sources are similar, they have been combined except for those indicated by footnotes. Advanced BMPs for the other two ancillary sources (plant site runoff and sludge and hazardous waste disposal areas) are listed separately.

After the ancillary source and the chemical group or groups have been identified, Table 8 can be used to determine BMP alternatives for each BMP category (prevention, containment, mitigation, and ultimate disposition). If a particular chemical falls in more than one chemical group, BMPs are identified

Table 8. Advanced BMP Alternatives

Ancillary Source	Chemical Group[a]	Prevention[b]	Containment[b]	Mitigation: Cleanup	Mitigation: Treatment[b]	Ultimate Disposition[b]
Material storage areas; In-plant transfer areas, process areas, material handling areas; Loading and unloading areas	**Liquids**					
	HP	1,2,3,5,6	1,2,5	1,2,3	1,2,3,4,5,6,8,9	1—8
	F1	1,2,3,6	1,2,5	1,2,3	1,2,3,5,6,8,9	1,4—8
	C	1,2,3,5,6	1,2,5	1,2,3	1,3,5,8	1—8
	R	1,2,3,5,6	2,5	1,2,3	1,2,3,5,7,8,9	1,4—8
	V	1,2,3,5,6	1,2,3,5	1,2,3	1,2,3,8,9	1,4—8
	A	1,2,3,5,6	1,2,5	1,2,3	1,3,4,5,6,8,9	1—8
	F	1,2,3,5,6	1,2,5	1,2,3	1,2,3,8,9	1—8
	BT/B	1,2,3,5,6	1,2,5	1,2,3	1,2,3,4,5,6,7,8,9	1—8
	Solids					
	HP	1,2,3,4,5,7	1,4	1,2	9	2,3,4,6,8
	F1	1,3,4	1,4	1,2	9	4,6,8
	C	3,4,5	1	1,2	N.A.	2,3,4,6,8
	R	3,4,5	1	1,2	N.A.	4,6,8
	A	3,4,5	1,4	1,2	9	2,3,4,6,8
	BT/B	3,4,5	1	1,2	9	2,3,4,6,8
	Gases					
	All gases	1,2,3,5	3,5	N.A.	3,6,9	N.A.
Plant site runoff	All liquids and solids	1,4,7	1,2	N.A.	1,4,5,8	5,7
Sludge and hazardous-waste disposal areas	All liquids and solids	1,2,3,6	1,2	1,2,3	6,8,9	5,7,8

Legend

Prevention

- P1 Monitoring
- P2 Nondestructive testing
- P3 Labeling
- P4 Covering
- P5 Pneumatic/vacuum conveying[c]
- P6 Vehicle positioning[d]
- P7 Dry cleanup

Containment

- C1 Secondary containment
- C2 Flow diversion
- C3 Vapor control
- C4 Dust control
- C5 Sealing

Cleanup

- M1 Physical
- M2 Mechanical
- M3 Chemical

Treatment

- T1 Liquid-solids separation
- T2 Volatilization
- T3 Carbon adsorption
- T4 Coagulation/precipitation
- T5 Neutralization
- T6 Ion exchange
- T7 Chemical oxidation
- T8 Biological treatment
- T9 Thermal oxidation

Ultimate Disposition

- U1 Deep-well injection
- U2 Landfill
- U3 Surface impoundment
- U4 Ocean disposal
- U5 Direct discharge
- U6 Reclamation
- U7 Municipal sewer system
- U8 Contract disposal

[a] See Table 2 for chemical groups.

[b] See Legend on this table for identity of BMPs listed under each category.

[c] Not to be used for flammable liquids and solids.

[d] For loading and unloading areas only.

N.A. denotes not applicable.

for each chemical group. For example, at a material storage area for a liquid, which is poisonous to humans and is volatile, containment BMPs would include those BMPs listed under these chemical groupings (poisonous to humans and volatile). Thus alternatives 1, 2, 3, and 5 would apply.

If a dry chemical or a gas is being evaluated, consideration of how the substance is handled on-site is necessary (as a solid or gas or as a liquid). Those solids and gases normally handled as liquids are listed in Tables 4 and 5. It will be noted that, if a soluble dry chemical is diluted with water, it could be treated as a liquid for purposes of identifying treatment BMPs.

Examples to Illustrate Identification of BMP Alternatives

Two examples are presented here to illustrate the use of Table 8 in identifying BMP alternatives. These examples represent a case of one chemical at one ancillary source. In evaluating a BMP program for a facility more than likely there will be several chemicals in several areas and ancillary sources, each one requiring an evaluation using the same approach and similar considerations as exemplified here.

Example 1. A Storage Tank for Acrylonitrile——The first step in evaluating the advanced BMPs is to compare them to the advanced-BMP alternatives that are applicable (use Table 8). Table 9 outlines the approach for identifying the BMP alternatives. The ancillary source (material storage) is identified and the chemical group classifications for acrylonitrile are identified from Table 3. Using Table 8, the advanced-BMP alternatives are identified for each chemical and each of the major categories of advanced BMPs (i.e., prevention, containment, mitigation, and ultimate disposition). The total number of BMPs applicable is additive except for the Treatment category under Mitigation and for Ultimate Disposition. Containment BMP 3 (vapor control) is applicable for volatiles but not for the other chemical groups; therefore the total number of BMPs applicable for containment includes vapor control. For the Treatment and Ultimate Disposition category, only those BMP alternatives common to all the pertinent chemical groups are applicable.

Example 2. A Transfer Operation——This example involves phenol transport by pipeline from material storage tanks to the loading operations. This example relates to the transfer pipeline. In this case phenol is transferred above 41°C as a liquid, but since it will solidify if spilled at ambient temperatures, the spilled phenol is handled as a liquid after the solidified phenol is dissolved in water. Table 10 outlines the approach for this example. As in the previous example the applicable advanced BMPs are identified for each pertinent chemical grouping and BMP category. In the evaluation of the BMP program the loading/unloading operation and the material storage areas would also need to be evaluated relative to BMPs.

Table 9. Example 1

Company:	A
Chemical:	Acrylonitrile
Ancillary Source:	Material storage (bulk storage tanks)
Chemical Grouping: (from Table 3)	Liquid, flammable, volatile, floater, amenable to BWT, biodegradable

	Advanced-BMP Alternatives[a]				
			Mitigation		
Chemical Grouping	Prevention	Containment	Cleanup	Treatment	Ultimate Disposition
Flammable	1,2,3	1,2,5	1,2,3	1,2,3,5,6,8,9	1,4—8
Volatile	1,2,3,5[b]	1,2,3,5	1,2,3	1,2,3,8,9	1,4—8
Floater	1,2,3	1,2,5	1,2,3	1,2,3,8,9	1—8
Amenable to BWT, biodegradable	1,2,3,5	1,2,5	1,2,3	1,2,3,4,5,6,7,8,9	1—8
Total	1,2,3	1,2,3,5	1,2,3	1,2,3,8,9	1—8

[a]See legend in Table 8 for BMPs that correspond to the number listed.

[b]Prevention (P5) pneumatic conveying not applicable for flammables.

Table 10. Example 2

Company:	B
Chemical:	Phenol
Ancillary Source:	In-plant transfer (pipeline from storage to dock facility)
Chemical Grouping: (from Table 9)	Solid,[a] poisonous to humans, soluble, amenable to BWT

Chemical Grouping	Advanced-BMP Alternatives[b]				
			Mitigation		
	Prevention	Containment	Cleanup	Treatment	Ultimate Disposition
Poisonous to humans	1,2,3,5	1,2,5	1,2,3	1,2,3,4,5, 6,8,9	1—8
Amenable to BWT, biodegradable	1,2,3,5	1,2,5	1,2,3	1,2,3,4,5, 6,7,8,9	1—8
Total	1,2,3,5	1,2,5	1,2,3	1,3,4,5,6, 8,9	1—8

[a]Phenol solidifies when spilled at ambient temperature and would be dissolved in water for clean up; therefore the liquid grouping would be used for this example; see text for further explanation.

[b]See legend in Table 8 for BMPs that correspond to the number listed.

Questions for Evaluating Advanced BMPs

At this point the user has compared the advanced BMPs proposed or used in a program with the applicable alternatives listed in Table 8. Also, the history of incidents and the potential water quality impact of an incident have been considered. The next step in the evaluation of the advanced BMPs is to determine whether they are satisfactory.

The following list of questions is provided as a guide for evaluating of the extent and effectiveness of the advanced BMPs. For convenience, the questions were developed based on the prevention and containment procedures for each ancillary source. A separate list of questions was developed for mitigation and ultimate disposition. Final decisions on whether the advanced BMPs are adequate should also include consideration of historical spill incidents, potential water quality impacts, effectiveness, and implementation costs. These factors are discussed later in this section.

Material Storage Areas

1. Are chemicals stored in large tanks or in small containers, such as 55-gal drums?
2. What is the volume of the chemical storage tanks?
3. What is the location, number, and maximum capacity of the 55-gal drum storage areas?
4. Is there some form of containment around the drum storage area? Is the floor impervious? Is there a sump?
5. Is storage outside or inside?
6. Is storage covered in any way?
7. Are storage tanks above or below ground or both?
8. Is protective coating provided in the tanks?
9. Are tanks insulated?
10. Are tanks cathodically protected?
11. Are high-liquid-level alarms provided? What type?
12. How do these alarms signal overflow conditions (i.e., by horn, siren, indicator light, etc.)?
13. Is there an automatic cutoff system between the tank and the pumping station?
14. Is there a direct visual level indicator on the tank?
15. Is the tank labeled?
16. Is a nondestructive testing program employed?
17. If so, what type (i.e., hydrostatic, ultrasonic)?
18. Are records of shell or wall thickness measurements available?
19. Is secondary containment provided?
20. If so, is the volume of secondary containment sufficient?
21. Is secondary containment impervious and without gravity drains?
22. Are dikes of sufficient height and distance from the tanks to prevent the hydrostatic pressure of a leak from causing a discharge over the dike?
23. Are dikes or other forms of containment influenced by physical factors such as slope, runoff, flooding, soil conditions, etc.?
24. Is the property underlaid by shallow ground water that would be subject to pollution via percolation of spills through the soil or tank seepage?

25. Are any flow diversion systems utilized? Where and to what form of containment is the flow diverted?
26. Are any vapor control techniques utilized?
27. Are dust control measures employed?
28. Are sealing techniques used and are sealants and applicators available for plugging a leak in a vessel or tank?

In-Plant Transfer Areas, Process Areas, and Material Handling Areas

1. What kind of operations are involved at the facility (i.e., pipelines, mechanical or pneumatic conveying of dry chemicals, etc.)?
2. Are pipelines above or below ground?
3. Are transfer pipelines visually inspected? How often? By whom?
4. Are flange joints, valves, catch pans, pipeline supports, locking of valves, and condition of exterior surfaces addressed in visual inspection reports?
5. Are transfer pipelines tested? What is the testing method? What is the frequency of testing?
6. Are transfer operations clearly labeled relative to chemicals handled and potential hazards?
7. Are handling operations for dry chemicals such as mechanical and pneumatic transfer systems visually inspected for spills? How often? By whom?
8. Is the above-ground piping protected from vehicular traffic?
9. Are clearances indicated for piping over roads?
10. Are cleaning operations for tanks and vessels included in the BMPs? How is the wash water disposed of?
11. Is covering or shielding used to protect solids handling systems, such as conveyor belts, from windblowing and rainwater?
12. Is secondary containment provided? Is the volume adequate? Is it impervious? Are there gravity drains?
13. Is water used to wash down spills to the sewer?
14. Are flow diversion systems utilized? Where is the flow diverted?
15. Is vapor control utilized?
16. Is dust control provided for operations in which dry chemicals are handled?
17. Are sealing techniques and sealant applicators available to plug leaks in pipelines?

Loading and Unloading Areas

1. What type of vehicles are used for loading and unloading (i.e., truck, rail car, barge)?
2. What procedures are followed relative to vehicle positioning (i.e., physical barriers, designated markings on the ground, interlocked warning light, or horn)?
3. Is there a central facility for loading and unloading or are loading and unloading facilities scattered throughout the plant site?
4. Are loading and unloading operations attended during actual transfer of chemicals? By whom (i.e., plant personnel or outside contractors)?
5. Is attendant instructed in procedures for spill control?
6. What transfer systems are used for transferring dry chemicals (i.e., mechanical, pneumatic, and/or combinations)?

7. Are drains and outlets on tanks, trucks, and rail cars checked for leakage before they are loaded or unloaded?
8. Are any monitoring procedures used (i.e., flow measurements, volume on tanks being loaded, pressure-drop alarm, liquid-level alarms)?
9. Is there evidence of spill materials in the loading and unloading areas?
10. Is there a drainage or containement system? What volume?
11. Is the system adequate for the volume of materials that are to be transferred?

Plant-Site Runoff

1. Are plant runoff and stormwater covered in the BMP program?
2. How is stormwater collected, treated, and discharged from the facility?
3. Are sewers segregated or combined?
4. Is segregation of spills from the various plant areas possible?
5. Is noncontaminated runoff from areas such as parking lots segregated and discharged separately?
6. Is roofing provided over process areas and spill-prone operations?
7. Is covering provided for material stockpiles of dry chemicals?
8. What procedures are followed for monitoring stormwater sewers or drainage ditches (i.e., TOC, conductivity, pH, and flow measuring instruments)?
9. Is the rainwater contained in dikes adequately tested for contamination before it is discharged to the receiving water?
10. Is some form of containment or holding basin provided for stormwater? What is the volume?
11. Are automatic diversion systems utilized to prevent discharge of containment runoff?
12. Can stormwater be diverted from spill areas?
13. Are sewer blockage and backup flooding problems?
14. Is noncontact cooling water segregated in the sewer system and discharged separately?
15. Is there available capacity in the process wastewater treatment system (or municipal treatment system) for the contaminated stormwater?

Sludge and Hazardous-Waste Disposal Areas

1. What ultimate disposition techniques are used?
2. Is spilled material disposed of with the facility's normal solid waste and sludge?
3. Is there a permit under RCRA?
4. What practices are followed relative to RCRA guidelines and regulations?
5. Is labeling used at these sites?
6. For landfill, how is leachate monitored and disposed?
7. Are contract disposal contractors experienced and reputable?
8. Are wells used for monitoring of landfill and surface impoundments and deep-well injection sites?
9. Are monitoring records kept for deep-well injection, landfills, and surface impoundments to determine the effects on ground water in the area?
10. Are there odor problems associated with the disposal sites?
11. Are landfills and surface impoundments protected from plant runoff? Is runoff diverted from around these disposal sites?

12. Are liners used for landfill and surface impoundments to protect seepage to ground water?
13. What type of liner is used?
14. Are liners or vegatative covering used around the side slopes of surface impoundments to prevent overflows and to provide protection from wind and rain erosion?
15. Are visual inspections used for these areas? How often? By whom?

The following questions are provided to assist the document user in evaluating of the BMP program relative to mitigation and ultimate disposition of a material that has been spilled and contained and requires disposal. The BMPs for mitigation and ultimate disposition are normally related to the chemical groups and not related to the ancillary sources. Therefore the questions for these BMPs are not divided into the different ancillary sources, as was done for prevention and containment BMPs, but rather are divided under mitigation and ultimate disposition.

Mitigation——Cleanup

1. Are sorbents, gells, or foams identified as cleanup measures in the BMP program?
2. What materials are used? Are they readily available at the facility?
3. Do appropriate personnel know where these materials are stored and are the locations and listings of these materials indicated in the BMP program?
4. How are these materials applied to the spilled material?
5. Are sorbents regenerated and reused?
6. How are these materials finally disposed of after use?
7. Are physical or mechanical cleanup devices utilized? Are they readily available?
8. How are the dry materials disposed of? Are they reclaimed, incinerated, disposed of by outside contract, landfilled, etc?

Mitigation——Treatment

1. What treatment facilities are available for a spilled material (i.e., process wastewater treatment plant, separate treatment, municipal plant, or portable trailer treatment system)?
2. Are they readily available?
3. What is the treatment process used at the facility?
4. What was the basis for the methods selected (testing, monitoring)?
5. Are they applicable (see Table 8 for applicable treatment alternatives)?
6. Do the compounds in question have any adverse effects on the treatment plant (industry and/or municipal)?
7. Is equalization, neutralization, or storage required or needed?
8. Can the treatment system handle rainfall runoff?
9. What procedures are available for storing the runoff if the plant cannot handle the spill?
10. Where is the material disposed of or discharged to after treatment?
11. Do the treatment systems receive the particular compounds present?
12. What monitoring program is used to evaluate the treatment (TOC, pH, TDS, etc)?
13. Does the treatment facility used for spilled materials have an NPDES discharge permit?

14. What are the effluent requirements for specific compound in the permit?

Ultimate Disposition

1. What means of ultimate disposal are available and utilized for spill materials?
2. Are they located on the plant site?
3. How do the ultimate disposition practices compare with the applicable alternatives (see Table 8)?
4. Are spilled materials disposed of with the normal plant facility solid wastes and sludges?
5. Are the RCRA guidelines being followed for ultimate disposal in landfills and other land disposal sites?
6. Is contract disposal used?
7. How long will the capacity be available at these disposal sites?
8. What is the BMP program for these sludge and hazardous-waste disposal areas?
9. If the spilled material is to be sent to the municipal plant, will there be an adverse impact on the municipal plant? What are the procedures for notifying the local plant when a spill occurs?
10. Is ocean disposal used? How often? How long is the permit applicable? Are there any provisions of ocean disposal that cannot be used?
11. After treatment, are the spilled materials discharged to the receiving stream? What is the basis of this practice? (See the next section for discussion of water quality impact.)

PRESCRIBING BMP ALTERNATIVES

At this point in the evaluation the user should be in a position to assess whether the base-line and advanced BMPs proposed or utilized in the BMP program can be effective in preventing releases of material to the receiving water. If the BMP program is still considered to be inadequate, the user may want to prescribe or develop advanced-BMPs alternatives to make the BMP program acceptable.

BMP alternatives can be prescribed to develop a BMP program to recommend alternative additional BMPs for upgrading a BMP program, or to assist an industry in developing or improving its BMP program. A procedure similar to evaluating a BMP program would be used to prescribe BMPs for specific plant sites. The minimum requirements indicated in Table 7, including the base-line BMPs, would be included in the program. The selection of the advanced BMPs would be based on the following:

Specific chemicals, their quantity and location
Potential for spill
Probability of spilled material reaching the receiving water without treatment
Effect on the plant's treatment system
Effect on the municipality's treatment system
Impact on the receiving stream

Applicable advanced BMP alternatives (Table 8)
Cost

Incorporating the minimum requirements in any BMP program will assist in evaluating the need for advanced BMPs. For example, a review of the plant's materials inventory information will provide the data base for defining the quantity and location of the toxic and hazardous materials. This data base should also assist in evaluating the potential loss of these materials and their adverse impact on the industry's or municipality's treatment system. A review of the industry's prior spills or record of potential spills and site plot plans will provide the basic framework for evaluating the probability of the spilled materials reaching the receiving water. After all the base-line BMPs are reviewed and then incorporated in the program, the next step is to evaluate the impact that a potential incident could have on the water quality. If the impact analysis suggests that the spill will have a significant effect and the base-line BMP program is not considered to be adequate, then advanced BMPs could be recommended as outlined in Table 8.

Receiving-Water Quality Impact Analysis——Methodology

A BMP program offers protection to surface waters from spills of hazardous and toxic materials at industrial sites. The probability that a hazardous material will not reach the surface waters or the degree of protection afforded by a BMP program cannot always be quantified. An estimate of the impact of a hazardous material on the surface water should a spill occur can provide a basis for judgment in assessing the adequacy or the degree of protection provided by a BMP program.

This section presents a general methodology that can be used to evaluate the effect of potential hazardous and toxic spills on water quality. The interpretation of the impact of a potential spill must be based on the expected concentration of the particular material in the receiving body of water and on the time of exposure of the particular aquatic species present to different concentrations of the spilled material.

General Methodology——The first step in determining the impact of a spilled substance is to estimate the concentration level of the material in the receiving water. The main factors governing the impact on aquatic life are the concentrations to which the organisms are exposed and the duration of the exposure to the concentrations. The spatial extent to which the receiving water is affected and the length of time that concentration levels exist should be addressed to evaluate impact. Knowledge of the concentration profiles in the receiving water as a function of space and time allows potential harmful quantities to be determined with respect to the EPA classification of hazardous materials (20) based on aquatic toxicity (LC_{50} 96-hr bioassay test). The hazardous compounds are classified into five categories according to aquatic toxicity, ranging from a highly toxic (acute) level to a least toxic level.

The second step is to interpret the data from the observed or calculated concentration profiles in the receiving water by means of existing bioassay test data. The degree of survival of test organisms is a direct function of concentration and time of exposure. A comparison of the bioassay test data with the calculated concentration profiles will assist in determining potential harmful quantities should they be discharged or after they have been discharged. The analysis would define the hazardous or toxic level in the receiving waters after a spill or assist in assessing potential impacts due to potentially future discharges (spills). This method of interpreting the data is discussed in the subsection Impact Evaluation.

This section discusses the analytical methodologies available for estimating the concentration levels in the receiving water due to hazardous material spills. This section also discusses a method that could be utilized to assess the harm caused by these hazardous material concentrations in the water body.

Basic Modeling Factors——Several methods are available for estimating the spatial and temporal concentration profiles of the spilled material to a receiving water. The effect that a mass release of a hazardous material has on the receiving water is very specific to site and event. The factors that affect the concentration profiles include the mass of the hazardous material spilled; the duration of the spill; how the material was spilled with regard to initial dilution; the receiving water characteristics, such as width, depth, flow, and temperature; and the nature of the spilled material, such as reactivity, solubility, and specific gravity. In addition the type of receiving water (small stream, river, estuary, lake, or coastal waterway) has a direct bearing on the mathematical method that can be used to calculate concentrations. When a substance is discharged into the receiving water, the location and the concentration of the mass are affected in varying degrees by dilution, advection, dispersion, and reaction.

Dilution refers to the mixing of the material contained in the discharge with the receiving water at the point of discharge or, more generally, to the mixing of any water containing the substance with another water source containing a lesser concentration of this substance. Although the concentration of the substance is altered by dilution, the total mass of the material remains unchanged.

Advection is the displacement of the material in a downstream direction at a rate equal to the mean velocity of the river flow. The amount of fresh water flow and the source's discharge to the receiving water govern the advective force.

Dispersion refers to the mechanisms that cause a concentrated mass of substance to spread out upon release into a water body. Dispersion acts in all directions. Lateral and vertical dispersions cause the mass to be distributed over the width and depth of the receiving water, whereas longitudinal dispersion causes the mass to extend itself along the length of the water body, with some particles moving faster and others moving slower than the mean flow velocity.

Reaction is a general term describing the removal of the substance from the water column. This removal may be due to physical, biological, or chemical occurrences, such as settling, decomposition, or actual chemical reactions. Reactivity, also termed decay, is the only mechanism by which the total mass of the substance in the water body may be reduced. Some materials are termed conservative. These materials do not decay and are removed from the receiving water only through the advective and dispersive forces. For example, soluble heavy metals are considered to be conservative.

The basic equation representing these phenomena is presented in Appendix E [Eq. (E.1)]. The equation is developed from a mass balance around a volume element in the receiving stream and serves as a basis for evaluating numerous conditions that could occur in a receiving stream. For this particular application, analytical solutions are presented for a variety of cases to illustrate the use of mathematical modeling to assist in evaluating spill impacts on water quality. More sophisticated techniques are also available for evaluating more complex problems using finite difference approaches (37,161).

Review of Available Data——Before attempting to employ the techniques discussed in this section, any data available on the receiving water should be reviewed. In the methodologies that will be discussed, specific input information is required in order to estimate the receiving water response. Such information includes receiving-water geometry, flow, dispersion coefficients, hazardous-material reaction rate, and mass and spill rate of the hazardous material.

Receiving-water characteristics such as geometry and flow can be measured. This information is also often available from United States Geological Survey maps, navigational charts, and water height and fresh-water discharge monitoring programs conducted by the USGS.

Longitudinal, lateral, and vertical dispersion coefficients are not immediately available but can be estimated by relating them to such physical characteristics as river geometry, river bed slope, and flow. Methods of estimating these coefficients can be found in the literature (154, 155, 156, 157, 159). One method of estimating the longitudinal dispersion coefficients is presented in Appendix E.

The nature of the hazardous material must be established with regard to its reactivity, such as its biodegradability or chemical interactions. If this information is not readily available, the substance can be treated as a nonreactive substance. This would provide a conservative estimate of the concentration levels, with the material being removed from the receiving water only by dispersion and advection.

The mass entering the receiving water can be estimated by establishing the maximum quantity of material that has the potential of spilling. This can be established after the locations and quantities of hazardous materials on the

industrial site are pinpointed. The mass can be assumed to spill instantaneously, or the spill rate (volume per time) can be calculated if this information is available.

Available Analytical Modeling Techniques——The analytical solutions presented are not specific to a particular type of water course but are specific to the variation of the the concentration in the receiving stream. For example, a one-dimensional system with longitudinal dispersion can be applied to a total river or an estuary, whereas the two-dimensional system could have direct application to an estuary or a spill near shore, where the concentrations could vary with the width and length of the study area.

Case I. Stream or Small River——For a stream or small river, where it is often appropriate to assume that the spilled material is instantaneously mixed vertically over the depth and laterally across the width, the maximum concentration due to a mass discharge can readily be determined. A loading rate, W (mass/time), can be calculated if the spill rate (volume/time) and the concentration C (mass/volume), of the material are known. The dispersive action in the stream can be ignored, and the mass of the spilled material is diluted by the total stream flow, Q (volume/time). The concentration in the stream can be calculated from the equation

$$C = W/Q \quad . \tag{1}$$

For a conservative material this concentration level moves as a plug downstream at a rate equal to the stream velocity, u. The extent of this plug along the stream length is a distance equal to the stream velocity times the spill duration.

If the spilled material is reactive, for example, biodegradable, the concentration is diminished with time as the plug moves downstream. This can be estimated by a first-order reaction and the stream concentration can be calculated by Eq. (2):

$$C = W/Q \cdot \exp\,[-Kx/u] \quad , \tag{2}$$

where K = first order reaction rate, 1/time, and x = distance downstream from discharge.

Case II. Larger Rivers——Even in water bodies in which dispersion is an important force and the material is reactive, Eq. (1) could be used as an initial estimate of the maximum concentration levels. Equation (1) would conservatively overestimate the concentration in the water body due to the fact that reaction and dispersion would actually diminish these levels.

In some water bodies, typically, large rivers (i.e., tidal rivers, estuaries), the effects of both advection and dispersion can be considered. Assuming that the material is instantaneously spilled and mixed uniformly over the cross section of the receiving water at the point of discharge, the variation in concentration in time and distance from the discharge is given by the following:

$$c(x,t) = (M/2A\sqrt{\pi Et}) \cdot \exp[-(x - ut)^2/4Et - Kt] \quad (3)$$

where c(x,t) is the resulting concentration at a distance x from the discharge and a time t after the discharge (mass/volume) started, M is the mass release, A is the cross-sectional area of the receiving water (constant over length), u is the mean advective velocity (constant flow), E is the longitudinal dispersion coefficient (constant over length), and K is the reaction coefficient.

Equation (3) is developed based on the assumption that the spill occurs instantaneously and that the coefficients are constant over the length of the river. In many cases an instantaneous spill concept is a reasonable assumption. However, some spill incidents occur over a period of several hours or longer, and Eq. (3) can be modified to simulate these circumstances. The resulting equation is presented in Appendix E [Eq. (E-2)]. In essence the overall spill can be divided into a series of successive short-term instantaneous releases. Each instantaneous release contains an amount of material equal to the total mass divided by the number of releases. Equation (3) can then be applied to each instantaneous release and the results for each spike added to yield the effect of the total release at any distance from the discharge and at any time since the beginning of the discharge.

The usefulness of Eq. (3) to estimate the response of a receiving water to a spill incident can be demonstrated by the following example. A spill of 200 lb of a hazardous material is discharged to a typical large river having the following characteristics: river flow of 15,000 cfs, velocity of 3.6 fps, and dispersion of 4.6 mi^2/day. The material spilled is treated as a conservative material (K = 0). Similar profiles could be developed for the case where the material is reactive (biologically, chemical settling, etc.).

Figure 2 shows the calculated concentration of the material in the receiving water on the y axis versus the distance along the length of the river from the spill discharge. The spatial profiles are plotted for several points in time (1,3,5,7, and 9 days). The top exhibit of Fig. 2 displays the profiles for the case of a spill of 200 lb of material occurring within 1 hr. The display of the calculated concentrations in this manner is useful in visualizing what portions of the river are affected by the spilled material and at what concentration levels. The dashed lines on the figure indicate the peak concentrations that may develop along the river.

The remaining exhibits on Fig. 2 display the calculated concentrations if the release of the same 200 lb of materials to the same river took 12 and 24 hr of time to occur. The differences between the distributions are the results of the duration of the release, which tends to reduce the concentration, due to the effect of dispersion.

Figure 3 presents the temporal distribution of the same spill. The calculated concentrations are plotted on the y axis versus time from the begining of the spill for several locations along the length of the river (50, 150, 300, 450, and 600 miles) from the spill discharge. This display is particularly useful in pointing out the time at which concentrations may begin

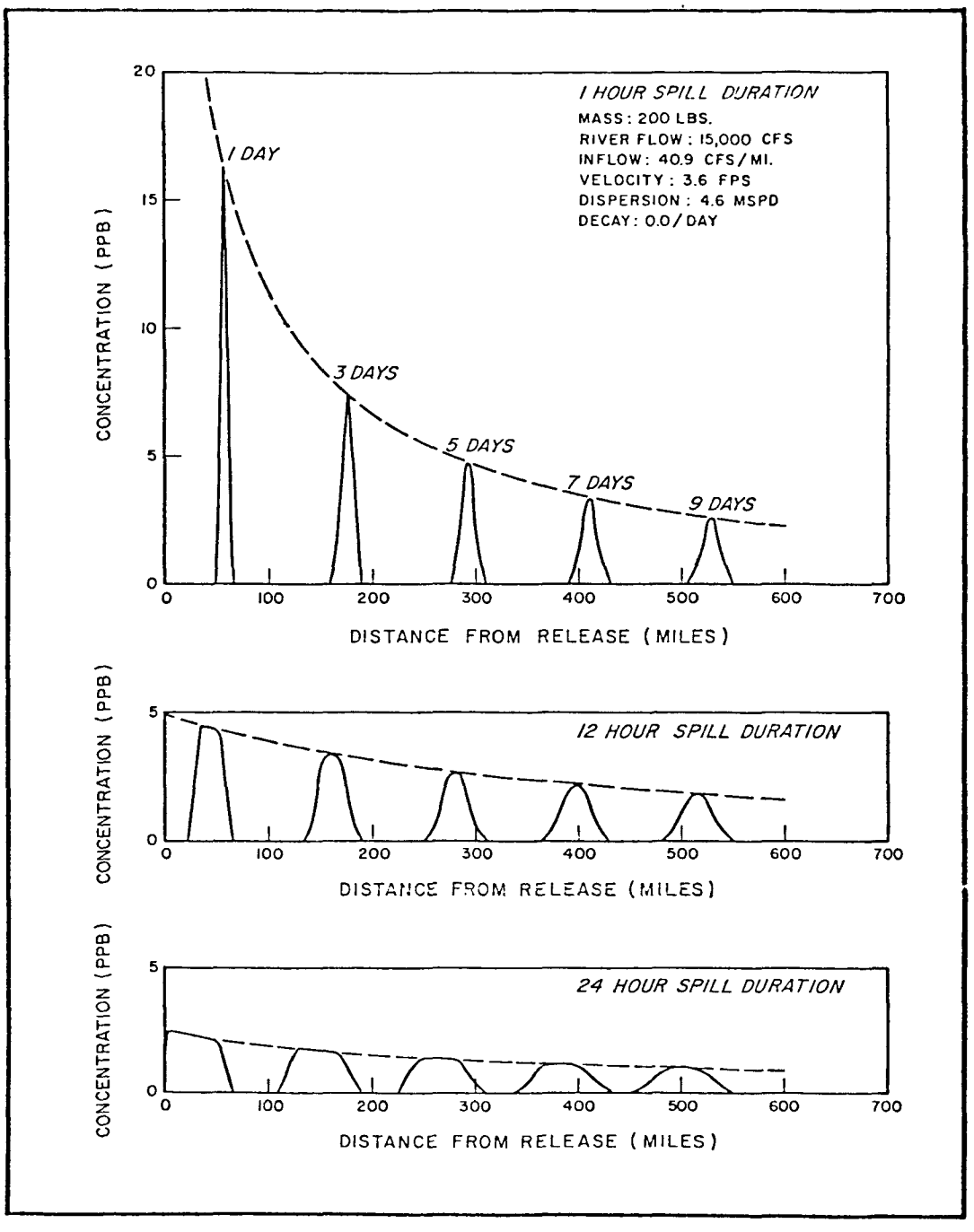

Fig. 2. Spatial Concentration

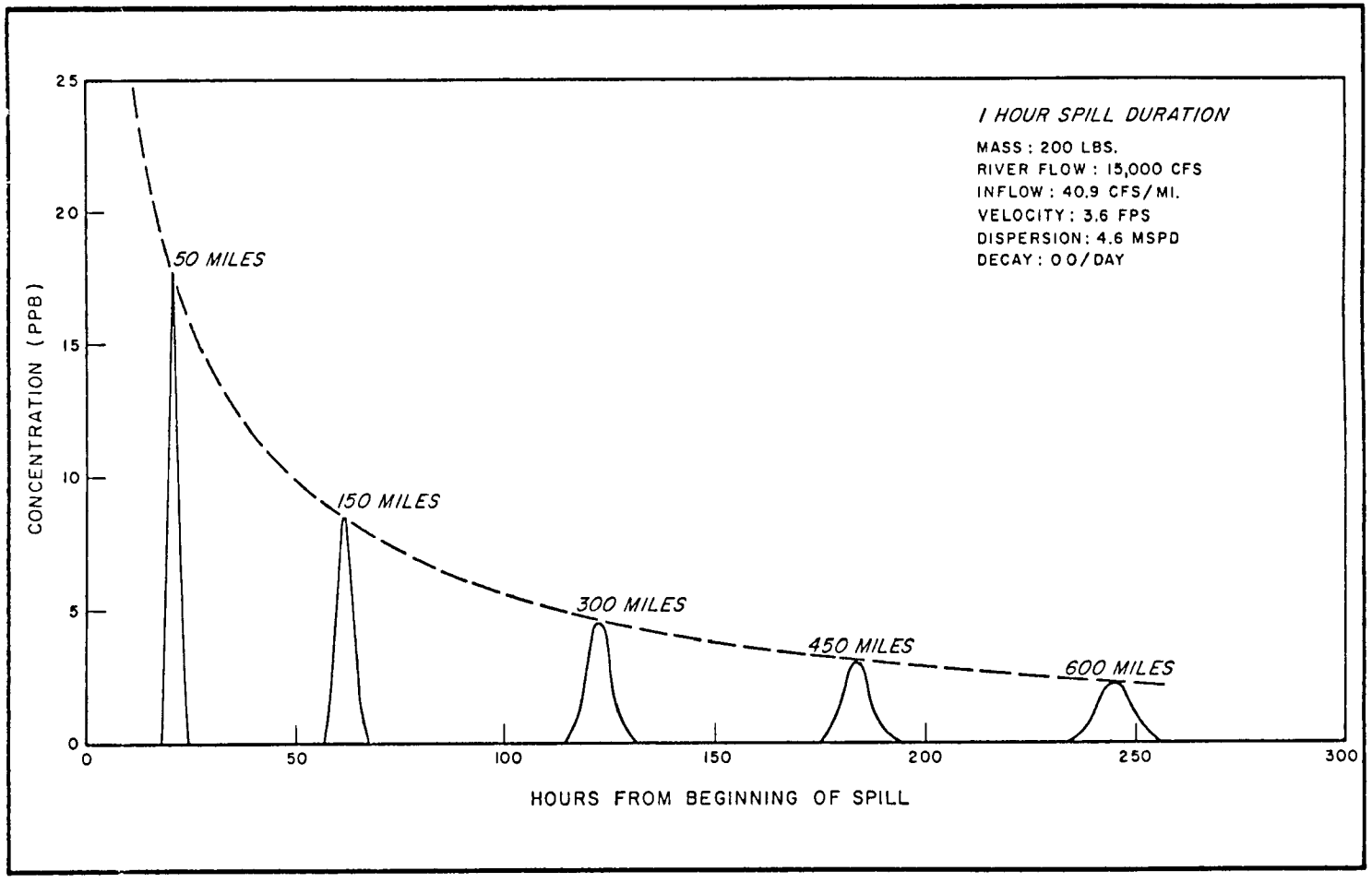

Fig. 3. Temporal Concentration Distribution at Various Distances

appearing and the length of time that the material may remain at particular locations along the river. The peak concentration that may develop along the water course as a consequence of this discharge is indicated by the dashed line.

The significance of the results presented in Figs. 2 and 3 is that there are relatively simple techniques available to calculate the concentration of a material in the rivers as a function of distance downstream and time. This type of information can be used to compare with known bioassay data to estimate whether harmful quantities are in the receiving stream. In this particular example it was assumed that the discharged material was uniformly mixed across the width of the river and throughout the depth.

Case III. Two- and Three-Dimensional System——Depending on the mixing characteristics and geometry of the water body or the manner in which the spilled material enters the receiving water, it is often not appropriate to assume that the material is instantaneously mixed across its width and depth. Typical of this case would be spill discharges near the shoreline to very wide or deep rivers, estuaries, lakes, coastal embayments, and coastal zones. In these cases the concentrations would be not only a function of length and time but also of width and depth. The analytical solutions for the two- and three-dimensional cases, estimating the receiving-water concentrations due to a spilled discharge, are presented in Appendix E [Eqs. (E-4) (E-5)].

In the analytical solutions for the one-dimensional case, (Eq. 3) and the two- and three-dimensional cases presented in Appendix E it is assumed that the parameters are constant throughout the receiving water. Such parameters as fresh-water flow, cross-sectional area and dispersion are considered to be constant throughout the spatial extent of the receiving water under analysis. For the two- and three-dimensional case it is assumed in this application that there are no physical boundary constraints. Although they may have some basic limitations due to the assumption assigned to develop these basic analytical solutions, the use of these models should be considered as a basic engineering tool for initially assessing the impact of spilled materials on the water quality. If the results define questionable impact, more sophisticated modeling techniques may be required.

Analytical solutions become increasingly difficult or impossible to formulate as the problem dimension and complexity increase and become particularly unwieldy to use. Where a detailed analysis is required for handling the more complex problems, the finite-difference approximation is the approach often used. The technique that can be used to solve these more complex type of problems (37) illustrates the discharge of a conservative substance and the the discharge of a strong acid. Computer-type programs are readily available to handle these more complex techniques.

Impact Evaluation——Once the temporal and spatial concentration profiles caused by a spilled material are estimated, the following question must be asked: How harmful are these concentration levels? The method which is predominately utilized for determing the measure of harm is aquatic toxicity. The effect of hazardous materials on aquatic organisms has been studied, with emphasis given to determining the concentration levels that produce immediate

harm (acute toxicity) and the concentration levels existing over a long term that have a detrimental effect (chronic toxicity) (118, 51, 20, 162).

Another factor that should be considered is the potentiality for toxicity to humans. The use of the receiving water is a major factor that must be considered. Municipal and industrial water supply intakes, recreational areas for boating, fishing, and swimming, areas for commercial fishing, and irrigation supply intakes must be identified. In this particular review toxicity is discussed relative to aquatic and chronic levels based on bioassy test data. Certainly, in critical areas where human consumption or use is the predominant factor, stricter and more effective water quality criteria must exist to safeguard the public's welfare.

The method commonly accepted as a measure of acute toxicity is the LC_{50} bioassay test. In this procedure aquatic organisms, usually fish, are exposed to different concentration levels of the tested substance for a specific period of time, normally 96 hr. The concentration of the substance at which 50% of the organisms survive or die is designated as the lethal concentration (LC_{50}) for the 96-hr exposure time.

The results of LC_{50} bioassay tests for a specific hazardous material can vary due to different testing procedures. The primary factors include the species utilized in the test, the exposure time, the method of determining the hazardous material concentration, and the type of test tank (static or flow-through). The EPA has proposed methodology for standardizing the measured data for a specific material to obtain a single LC_{50}, 96-hr value (163). This is accomplished by applying correction factors, based on statistical analysis of the measured data, to adjust for variable test conditions.

Chronic toxicity levels are commonly measured as the highest concentration of the hazardous material that has no adverse effect on survival, growth, or reproduction of a species. This level is also known as the Maximum Acceptable Toxicant Concentration (MATC). Tests conducted over the life cycle or partial life cycle of a species determines the limits within which the MATC must fall. MATC data, based on long-term studies, are not always readily available. The EPA has proposed methodology (163) for estimating the chronic toxicity concentration based upon LC_{50}, 96-hr measurements.

The EPA is recommending a dual concentration criterion (criteria guidelines) in the receiving water (163). It consists of a maximum concentration based on the final acute toxicity level and an average concentration over a 24-hr period based on the final chronic toxicity level. For a specific hazardous material the acute and chronic toxicity levels of the substance can be compared with the concentrations calculated or observed in the receiving water as the result of a spill. This comparison would indicate, on a first-approximation basis, whether a potential problem exists and whether additional data on aquatic toxicity are required. The basis for additional data and/or modeling needs will depend directly on the comparison of the criterion and the concentrations in the receiving waters. When the concentrations are lower than the criterion, additional monitoring would not be required. If the expected concentrations are near to or exceed those in the proposed criterion, additional analysis will be required to assess the magnitude of the

problem. One factor, which is not considered a major impact, is the time of the exposure of the test species. This is certainly true in receiving streams, where aquatic life is exposed for shorter periods of time but at higher concentrations. It is this type of situation that has to be evaluated so that natural interpretation of potentially harmful levels can be evaluated.

A more detailed approach can be taken to quantify the harm caused by a hazardous material spill. The impact of a spill relative to aquatic toxicity is specific to site and event. Analogous to laboratory toxicity studies, the impact depends on such factors as the type of species present, the nature of the hazardous material, the concentration levels to which organisms are exposed, and the exposure time. The main factors governing organism survival are the concentration levels that the organisms are exposed to and the duration of exposure. It is the combination of the concentration level and exposure time that determines the level of organism survival. For example the number of organisms that can be killed during a shorter period of time but at a higher concentration level is equivalent to the number killed at a lower concentration level for a longer period of time.

Aquatic toxicity data are most readily available in the form of LC_{50}, 96-hr values. However, it has been found that acute toxicity to fish generally occurs within the first 96 to 100 hr of exposure time. Also, it is reasonable to assume that any condition that produces 50% mortality of the fish population is obviously a harmful condition. To assess the impact of a spill more quantitatively, it is necessary to establish a range of survival rates for various concentration levels and exposure time combinations.

When a bioassay study is conducted at a specific concentration level, the percent survival can be measured at several times instead of only after 96 hr. This test can be repeated at several concentrations and a series of curves can be developed as indicated in Fig.4(A), which shows the percent survival versus exposure time for several concentrations of the test material. The test data can be arranged into the more usable form indicated in Fig. 4(B), a plot of concentration versus exposure time for a range of survival rates. For any concentration and exposure time combination the percent survival can be determined.

When sufficient measured data are not available for generating the curves in Fig. 4(B) approximate methods are available to estimate the relationship for LC_{50}. On the basis of statistical analysis the EPA has proposed methodology for relating the LC_{50}, 96-hr concentration to the LC_{50} concentrations at exposure times of 24, 48 and 72 hr (163). Another study has related the LC_{50} concentration for the 96 hour exposure time to the 6 hour exposure time (51). From these relationships for the 50% survival rate the concentration—exposure-time curve can be estimated similar to the relationship shown in Fig. 4(B) for 50% survival.

The EPA has also proposed methodology for relating the 50% survival concentration to the concentration likely to be lethal to 0 to 10% of the aquatic population (163). For the 90 to 100% rate the concentration—exposure-time curve can be estimated. Therefore based solely on LC_{50}, 96-hr measurements,

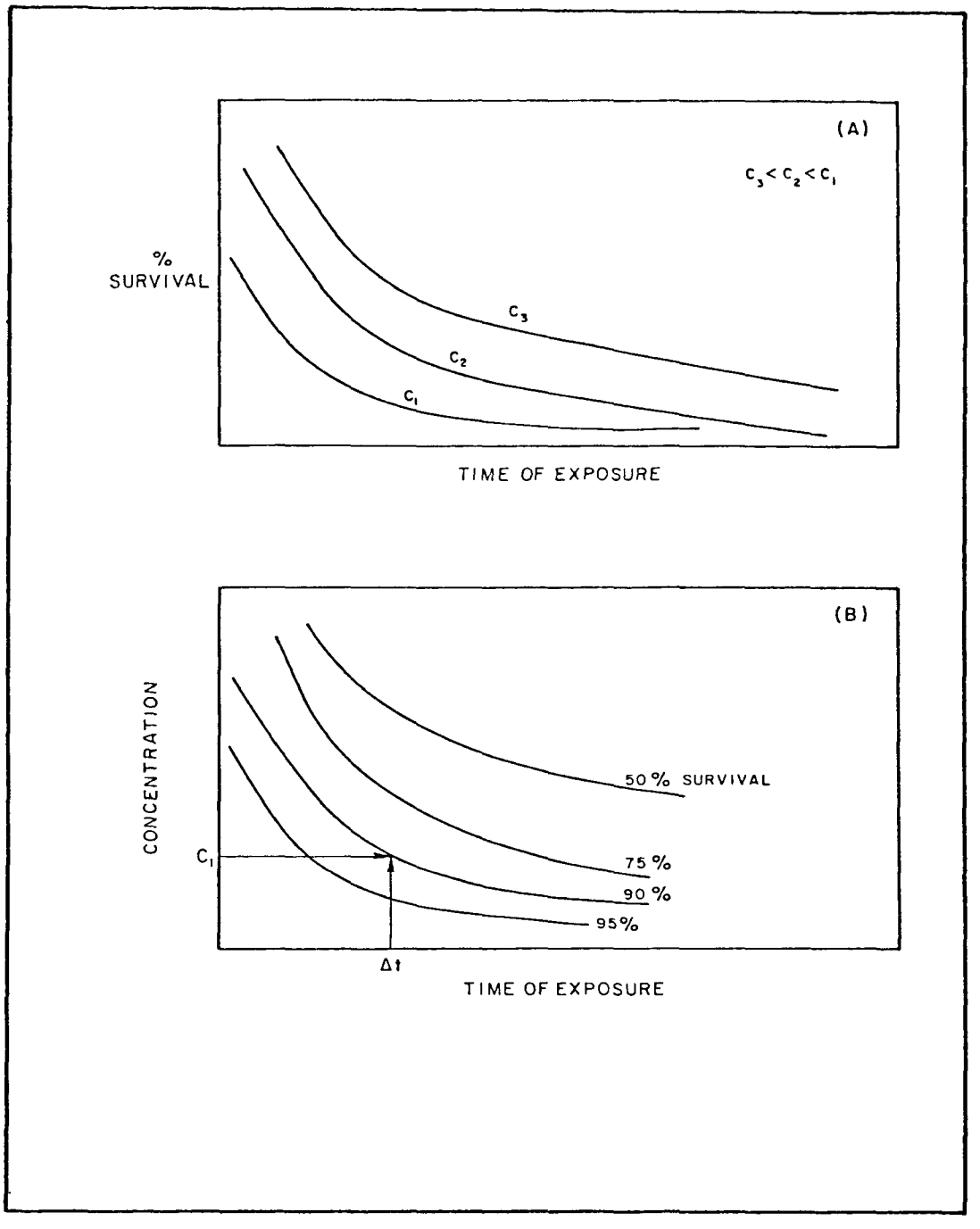

Fig. 4. Example of Toxicity Data

when no additional bioassay data are available, the upper bound (50% survival) and the lower bound (90 to 100% survival) curves of Fig. 4(B) can be approximated.

Using the concentration—exposure-time relationships from actual data or from the approximated relationships in conjunction with the calculated temporal concentrations of the hazardous material at various locations along the length of the receiving water, the impact of a spill can be quantified in terms of percent survival. This evaluation procedure is illustrated in Fig. 5. Figure 5(A) displays the calculated concentration profile of the hazardous material in the receiving water at a specific location (station A) with respect to time from the beginning of the spill. This profile would be developed from the analytical modeling techniques previously discussed and illustrated by the calculated concentration profiles in Figs. 2 and 3. The curve in Fig. 5(A) can be divided into a series of time periods. During time period Δt an average concentration, C_1, in the receiving water is estimated. The effect of this concentration and exposure time (Wt) combination can be determined from Fig. 4(B) in terms of percent survival. This procedure is repeated for the subsequent time periods, and the percent mortality (or survival) is plotted for each time interval as in Figure 5(B). The percent survival is accumulated over time from Figure 5(B) as illustrated by Fig. 5(C).

This entire procedure is repeated at different locations to obtain the cumulative percent survival along the length of the receiving water. This analysis takes into account the concentration levels of the spilled hazardous material, which vary in the receiving water over time and over space as shown on Figs. 2 and 3. By applying this technique to different river stations, the stretches of the receiving water that are critically impacted in terms of percent mortality can be determined.

As illustrated above, by using the concentration—exposure time—percent survival bioassay relationships and the spatial and temporal concentration levels calculated in the receiving water as a result of a spill, the impact can be quantified in terms of organism survival. However, it is not the purpose of this discussion to establish that 80, 90, 95, 97, or even 100% survival is necessary in order to determine that a potential spill would not be harmful. The methodology presented can be used to quantify the effect of a spill and subsequently provide input for a decision to be made on the adequacy of the level of protection provided by a BMP program.

Summary—In summary methodology has been presented to estimate the concentration levels of hazardous materials in the receiving water due to a spill and to assess the harm caused by this material to the water body. Due to site and event specificity some situations would require a more detailed and complex analysis. However, in many cases relatively simple analytical calculations can be used to initially approximate the concentration levels. The water quality estimation coupled with basic aquatic toxicity information can provide the basis for assessing the harm that could be caused by a potential spill of hazardous materials.

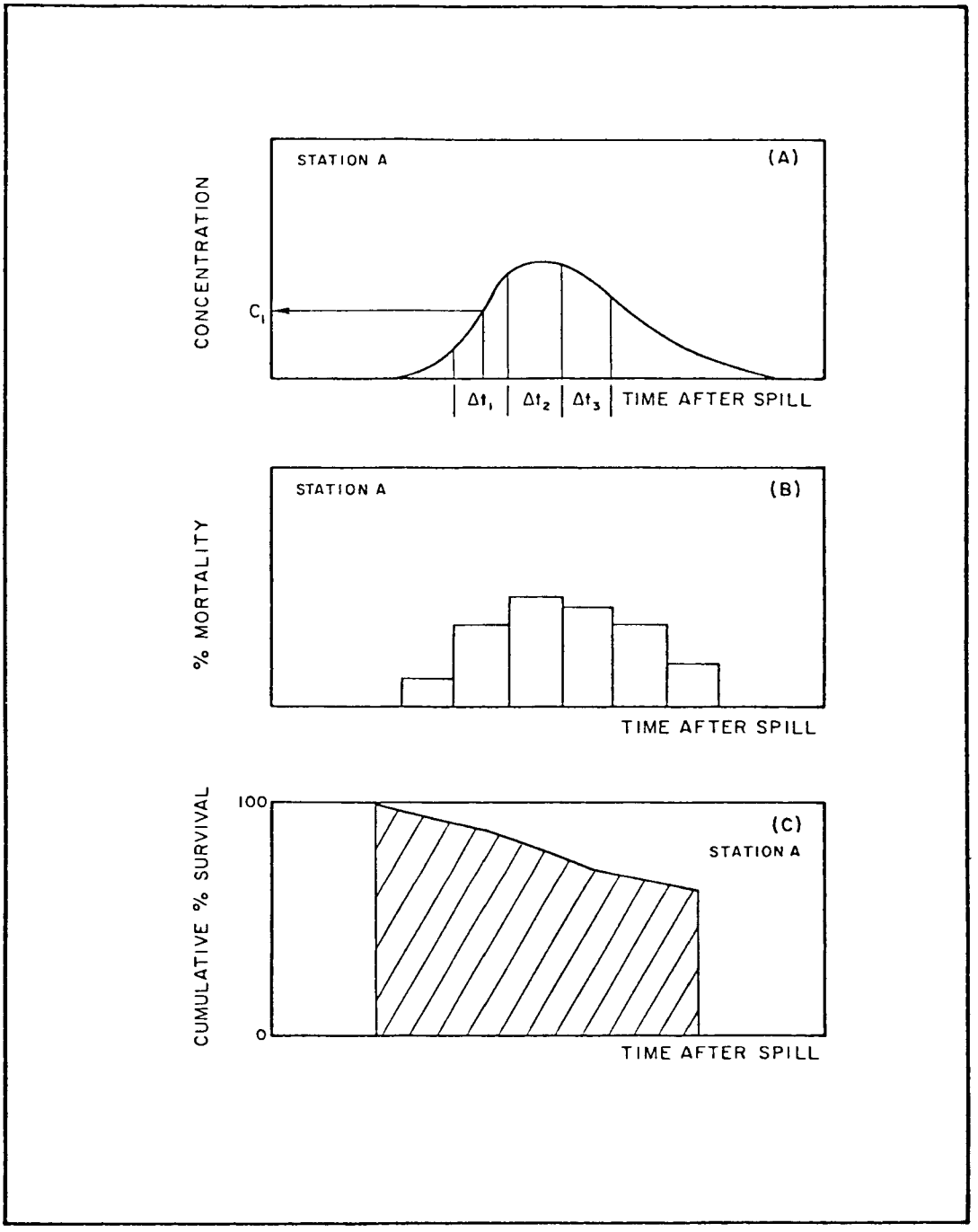

Fig. 5. Example of Calculating Percent Survival

Questions for Evaluating the Impact on Water Quality

The following list of questions was developed to assist the user in evaluating the impact of a hazardous spill on water quality. The potential water quality impact should have a direct input on the degree and extent of the BMPs that should be imposed on an industry.

1. What are the uses of the receiving water (municipal or industrial water supply; recreational activities as fishing, boating, swimming; commercial fishing; and irrigation supply)?
2. Has a mathematical model been developed to simulate the response of the receiving water to a spill of the hazardous material?
3. Has the model been calibrated?
4. Has the model been verified against any data sets?
5. What is the data base (geometry, flow, type of receiving stream)?
6. Have aquatic toxicity studies been performed for those hazardous materials having spill potentiality? What was the aquatic organism used?
7. Has a comparison been made between aquatic toxicity and the calculated concentrations relative to percentage survival?
8. If no modeling analysis has been done, are there sufficient data available for a preliminary assessment of the potential impacts (geometry, flow, water uses, type of receiving water etc.)?
9. Is the material in question poisonous to humans (see Tables 3, 4, and 5)?

Appendix A

LITERATURE SURVEYED AND INDUSTRIAL CONTACTS MADE

ARTICLES AND REPORTS

1. J. E. Glattly, "Spill Control and Contingency Response Plan," pp. 13—18 in Proceedings of 1978 National Conference on Control of Hazardous Material Spills, Miami Beach, Florida.

2. William B. Katz, "A New Pair of Eyes," pp. 1—7 in Proceedings of 1976 National Conference on Control of Hazardous Material Spills, New Orleans, Louisiana.

3. H. Schwartzman and R. J. Wiese, "Spill Protection Engineering for Industry—An Integrated Approach," op. cit., pp. 33—38.

4. P. L. D'Allesandro and C. B. Cobb, "Hazardous Material Controls for Bulk Storage Facilities," op. cit., pp. 39—43.

5. L. E. Carlson, J. F. Erdman, and G. J. Hanks, "How One Chemical Company Is Attacking the Spill Problem," pp. 106—116 in Proceedings of 1974 National Conference on Control of Hazardous Material Spills, San Francisco, California.

6. J. Barber, "Phosphoric Acid Storage and Containment at Fertilizer Plants," op. cit., pp. 130—134.

7. J. W. Corley, "Process Plant Design for Control of Hazardous Material Spills," pp. 15—17 in Proceedings of 1972 National Conference on Control of Hazardous Material Spills, Houston, Texas.

8. James L. Kern, "Control Systems for Prevention of Hazardous Material Spills in Process Plants," op. cit., pp. 19—23.

9. W. H. Weiss, "Spill Prevention and Control: A Special Report," Pollution Engineering, pp. 22—29 (November 1976).

10. G. N. McDermott, "Industrial Spill Control and Pollution Incident Prevention," Journal, Water Pollution Control Federation, pp. 1629—1639 (August 1971).

11. H. E. Brown, W. S. Cameron, and R. G. Bennett, "Spill Control at Proctor and Gamble's Iowa City Plant," Proceedings of the Iowa Academy of Sciences, Vol. 79 (1972—73).

12. Manufacturing Chemists Association, Guidelines for Chemical Plants in Prevention, Control, and Reporting of Spills, 1972.

13. American Petroleum Institute, Suggested Procedure for Development of SpillPrevention Control and Countermeasure Plans, 1974.

14. WPCF Manual of Practice No. 3, Regulation of Sewer Use, pp. 15 and 34, Water Pollution Control Federation, Washington, 1975.

15. W. B. Neely and R. J. Mesler, "An Emergency Response System for Handling Accidental Discharges of Chemicals into Rivers," pp. 19—23 in Proceedings of 1978 National Conference on Control of Hazardous Material Spills, Miami Beach, Florida.

16. S. M. Pier et al., "Methods of Categorization of Hazardous Materials," op. cit., pp. 27—31.

17. T. J. Charlton et al., "Relating Handling of Hazardous Materials to Spill Prevention," op. cit., pp. 32—35.

18. N. J. Sell and F. Fischbach, "Insufflation Permits Dust Recycling in the Cement Industry," Pollution Engineering, pp. 32—34 (November 1976).

19. Environmental Protection Agency, "Oil Pollution Prevention. Nontransportation Related Onshore and Offshore Facilities," Federal Register 38(237), Part II, 34164—34170 (Dec. 11, 1973).

20. Environmental Protection Agency, "Water Programs. Hazardous Substances," Federal Register 43(49), Part II, 10474—10508 (Mar. 13, 1978).

21. California Department of Health, Vector and Waste Management Section, California Characterization and Assessment System for Hazardous and Extremely Hazardous Wastes (March 1978).

22. C. R. Corbett, "A Dynamic Regional Response Team," pp. 4—8 in Proceedings of 1978 National Conference on Control of Hazardous Material Spills, Miami Beach, Florida.

23. G. Moein, "Magnitude of the Chemical Spill Problem — A Regional Overview," op. cit., pp. 84—90.

24. M. D. Ryckman and T. J. Weise, "REACT's Response to Hazardous Materials Spills," op. cit., pp. 24—26.

25. M. Kirsh, R. W. Melvold, and J. J. Vrolyk, "A Hazarodus Materials Spill Warning System," pp. 84—90 in Proceedings of 1976 National Conference on Control of Hazardous Material Spills, New Orleans, Louisiana.

26. J. E. Amson and J. L. Goodier, "An Anaysis of the Economic Impact of Spill Prevention Control on the Chemical Industry," pp. 39—45 in Proceedings of 1978 National Conference on Control of Hazardous Material Spills, Miami Beach, Florida.

27. R. W. Landers and H. V. Johnson, "Photo Interpretation Keys for Hazardous Substances Spill Conditions," op. cit., pp. 124—127.

28. R. M. Koerner et al., "Detection of Seepage and Subsurface Flow of Liquids by Microwave Interference Methods," op. cit., pp. 287—292.

29. B. M. Willmoth, "Procedure to Reduce Contamination of Groundwater by Hazardous Materials," op. cit., pp. 293—295.

30. J. P. Lafonara et al., "Soil Surface Sealing to Prevent Penetration of Hazardous Material Spills," op. cit., pp. 296—302.

31. R. C. Mitchell, R. L. Cook, and I. Wilder, "Systems for Plugging Leaks of Hazardous Materials," op. cit., pp. 332—337.

32. K. R. Huibregtse, J. P. Lafornora, and K. H. Kast, "In-Place Detoxification of Hazardous Material Spills in Soil," op. cit., pp. 362—370.

33. J. G. Michalovic, C. K. Akers, R. W. King, and R. J. Pilie, "Development of Means for Applying Multipurpose Gelling Agent to Spilled Hazardous Materials," op. cit., pp. 378—381.

34. R. E. Temple and W. T. Gooding, "A New Universal Sorbent in Hazardous Spills," op. cit., pp. 382 and 383.

35. L. D. Witny and R. E Shaffer, "Feasibility Study of Hazardous Vapor Amelioration Techniques," op. cit., pp. 384—392.

36. E. C. Norman and H. A. Dowell, "The Use of Foam to Control Vapor Emissions from Hazardous Material Spills," op. cit., pp. 399—405.

37. J. A. Nusser, T. W. Gallagher, and J. P. St. John, "Mathematical Modeling for Impact and Control of Hazardous Material Spills," op. cit., pp. 422—426.

38. D. T. Tsahalis, "Mitigation of Chemical Spills—RIOIS: A River Dispersion Model," op. cit., pp. 427—431.

39. B. A. Benedict, "Analytical Models for Toxic Spills," op. cit., pp. 439—443.

40. R. M. Koener, A. E. Lord, and J. N. Deishes, "Acoustic Emission Stress and Leak Monitoring to Prevent Spills from Buried Pipelines," pp. 8—15 in Proceedings of 1976 National Conference on Control of Hazardous Material Spills, New Orleans, Louisiana.

41. S. A. Wiener and S. A. Heard, "Spill Prevention and Material Sensory Devices," op. cit., pp. 16—23.

42. A. J. Houghton, J. A. Simmons, and W. E. Gonso, "A Fail Safe Transfer Line for Hazardous Fluids," op. cit., pp. 29—32.

43. John Buckley and S. A. Weiner, "Documentation and Analysis of Historical Spill Data to Determine Hazardous Material Spill Prevention Research Priorities," pp. 85—89 in Proceedings of 1974 National Conference on Control of Hazardous Material Spills, San Francisco, California.

44. W. T. Musser, "The Ocean Disposal Permit Program," op. cit., pp. 99—101.

45. R. S. Allen, "Considerations in the Design and Operations of PVC Resin Plants," op. cit., pp. 102—105.

46. R. M. Koener and A. E. Lord, "Earth Dam Warning System to Prevent Hazardous Material Spills," op. cit., pp. 119—126.

47. R. H. Hall and D. H. Haigh, "Automatic Sealing Imbiber Valves," op. cit., pp. 127—129.

48. Allegheny County, Sanitary Authority, Pittsburgh, Pennsylvania, Effects of Hazardous Spills on Biological Waste Treatment, PB-276 724 (December 1977).

49. Envirex, Inc., Milwaukee, Wisconsin, Environmental Science Division, Manual for the Control of Hazardous Material Spills. Volume I: Spill Assessment and Water Treatment Techniques, PB-276 734 (November 1977).

50. C. H. Ward et al., Rice University, "Handling Practices," Vol. III of Report of Activities—February 1976—December 1977 Research on Hazardous Substances in Support of Spill Prevention Regulations (January 1978).

51. G. W. Dawson, M. W. Stradley, and A. J. Shuckrow, Battelle, Pacific Northwest Laboratories, Executive Summary, Methodologies for Determining Harmful Quantities and Rates of Penalty for Hazardous Substances, Vol. I; Technical Documentation, Vol. II; and Appendices, Vol. III (draft final reports) (October 1974).

52. B. F. Wirth, "Preventing and Dealing with In-plant Hazardous Spills," Chemical Engineering, pp. 82—96 (Aug. 18, 1975).

53. J. B. Cox, "Prevention, Containment and Countermeasure (SPCC) Plan of the Refuse Act Permit Program," pp. 27—34 in Proceedings of the 1972 National Conference on Control of Hazardous Material Spills, Houston, Texas.

54. B. W. Mercer et al., "Current Methodology for Disposal of Spilled Hazardous Materials," pp. 190—195 in Proceedings of 1978 National Conference on Control of Hazardous Material Spills, Miami Beach, Florida.

55. Environmental Protection Agency, "NPDES Proposed Requirements for Spill Prevention Control and Countermeasure Plans to Prevent Discharge of Hazardous Substances from Certain Facilities," Federal Register, 43(171), Part V, 39276—39280 (Sept. 1, 1978).

56. Environmental Protection Agency, "NPDES Criteria and Standards for Imposing Best Management Practices for Ancillary Industrial Activities," Federal Register 43(171), Part VI, 39282—39284 (Sept. 1, 1978).

57. E. I. du Pont de Nemours & Co., Inc., Elastomer Chemical Department, Beaumont Works, Spill Prevention Control Program (Mar. 30, 1973).

58. E. W. Lawler, T. L. Ferguson, and A. F. Meiners, "Methods for Disposal of Spilled and Unused Pesticides," pp. 329—335 in Proceedings of 1974 National Conference on Control of Hazardous Material Spills, San Francisco, California.

59. S. S. Gross, "Evaluation of Foams for Mitigating Air Pollution from Hazardous Material Spills," pp. 394—398 in Proceedings of 1978 National Conference on Control of Hazardous Material Spills, Miami Beach, Florida.

60. J. Smith, "Fire Service Evaluation and Field Tests of EPA-Developed Hazardous Spills Control Devices," op. cit., pp. 444—446.

61. Ralph Stone, "Disposal of Hazardous Waste in Sanitary Landfills," pp. 314—324 in Proceedings of 1974 National Conference on Control of Hazardous Material Spills, San Francisco, California.

62. J. R. Cannon, "Chemical Fixation of Hazardous Material Spill Residues," pp. 416—423 in Proceedings of 1976 National Conference on Control of Hazardous Material Spills, New Orleans, Louisiana.

63. L. H. Frisbie, "Safe Disposal Practices for Pesticide Waters," op. cit., pp. 434—436.

64. E. C. Lazar, "Summary of Damage Incidents from Improper Land Disposal," op. cit., pp. 437—400.

65. Andre Boily, "Central Hazardous Waste Treatment at Your Disposal," op. cit., pp. 441—443.

66. Office of Water Enforcement, Permits Division, Technical Guidance for the NPDES Program——BMP's for Liquid Transfer Operations, Preventive Maintenance and Housekeeping, Plant Site Runoff, Truck and Railcar Loading and Unloading, draft copy (July 1978).

67. R. I. Epstein and S. R. Eckhaus, "Ultimate Disposal of Demilitarized Chemical Agent Residues," pp. 424—428 in Proceedings of 1976 National Conference on Control of Hazardous Material Spills, New Orleans, Louisiana.

68. R. J. Buchanan and A. A. Metry, "Closing the Gap in Hazardous Waste Management in New Jersey," pp. 196—201 in Proceedings of 1978 National Conference on Control of Material Spills, Miami Beach, Florida.

69. S. E. Soden and J. C. Johnson, "Burial and Other High Potential Response Techniques for Spills of Hazardous Chemicals That Sink," op. cit., pp. 202—207.

70. Cary Perket, "An Assessment of Hazardous Waste Disposal in Landfills, The State of the Art," op. cit., pp. 208—212.

71. L. H. Frisbie, "State Disposal Practices for Hazardous Wastes," op. cit., pp. 213—216.

72. J. R. Conner, "Ultimate Disposal of Liquid Wastes by Chemical Fixation," pp. 906—922 in Proceedings of the 29th Annual Purdue Industrial Waste Conference, West Lafayette, Indiana, 1975.

73. N. K. Thumg et al., "Biodegradation of Spilled Hazardous Materials," pp. 217—220 in Proceedings of the 1978 National Conference on Control of Hazardous Material Spills, Miami Beach, Florida.

74. A. J. Darnell, "Disposal of Spilled Hazardous Materials by the Bromination Process" op. cit., pp. 221—225.

75. S. D. Erk, M. L. Taylor, and T. O. Tiernan, "Environmental Monitoring in Conjunction with Incineration of Herbicide Orange at Sea," op. cit., pp. 226—231.

76. Hydroscience, Inc., Westwood, New Jersey, Spill Analysis for the Rhine River Below Basel, Switzerland, internal report (April 1977).

77. Environmental Protection Agency, "Preliminary Notification of Hazardous Waste Activities, Proposed Procedures," Federal Register 143(133), Part IV, 29908—29916 (July 11, 1978).

78. M. Gruenfeld, F. Freestone, and I. Wilder, "EPA's Mobile Lab and Treatment System Responds to Hazardous Spills," Industrial Water Engineering, pp. 18—23 (September 1978).

79. D. M. Ditoro and M. J. Small, "Stormwater Interception and Storage," Journal of the American Society of Civil Engineers, Environmental Engineering, pp. 43—54 (February 1977).

80. D. Lazurchik, "Pennsylvania's Pollution Incident Prevention Progam," p. 528—533 in Proceedings of the 25th Industrial Waste Conference, Purdue University, Lafayette, Indiana, May 1970.

81. Robert A. Bove, "Recognizing and Dealing with Dangerous Gases," Pollution Engineering, pp. 34—37 (November 1978).

82. A. McRae, L. Whelchel, and H. Rowland, Toxic Substances Control Sourcebook, Aspen Publications, Germantown, MD, 1978.

83. Allied Chemical Company, Corporate Pollution Control Guidelines——SPCC Plans, internal report (May 4, 1978).

84. "Occupational Safety and Health Standards," Federal Register 39(125), Part II, 23502—23828 (June 27, 1974).

85. A. Dikulik, "Manually Operated Valves," Chemical Engineering, Deskbook Issue, pp. 119—126 (Apr. 3, 1978).

86. R. Welch, A. Marmelstein, and P. Maughan, "Aerial Surveillance Spill Prevention System," Proceedings of 38th Annual Meeting, American Society of Photogrammetry, Washington, D.C., March 1972.

87. "Ocean Incineration Anew," Environmental Science and Technology, pp. 236 and 237 (March 1977).

88. "Outlook——Garbage Is a Waste Is a Hazard Is a Resource," Environmental Science and Technology, pp. 230—232 (March 1977).

89. Metcalf & Eddy, Inc., Wastewater Engineering: Collection, Treatment, Disposal, McGraw-Hill, New York, 1972.

90. W. Weber, Physiochemical Processes for Water Quality Control, Wiley-Interscience, New York, 1972.

91. R. Culp, G. Wesner, and G. Culp, Handbook of Advanced Wastewater Treatment, 2d ed., Van Nostrand, Reinhold, New York, 1978.

92. W. W. Echenfelder, Industrial Water Pollution Control, McGraw-Hill, New York, 1966.

93. N. Nemerow, Liquid Waste of Industry——Theories, Practices and Treatment, Addison-Wesley, Reading, MD, 1971.

94. E. Schrolder, Water and Wastewater Treatment, McGraw-Hill, New York, 1977.

95. E. Thackston and W. W. Eckenfelder, Process Design in Water Quality Engineering——New Concepts and Developments, Jenkins Publishing Co., Austin, TX, 1972.

96. L. G. Rich, Unit Processes of Sanitary Engineering, Wiley, New York, 1963.

97. R. Culp and G. Culp, Advanced Wastewater Treatment, Van Nostrand, Reinhold, New York, 1971.

98. T. J. Mulligan and R. D. Fox, "Treatment of Industrial Wastewaters," Chemical Engineering, pp. 49—66 (Aug. 31, 1976).

99. R. Treybal, "Mass-Transfer Operations," Chemical Engineering Series, McGraw-Hill, New York, 1968.

100. Allied Chemical Company, Operating Spill Prevention, Containment, and Countermeasure Plan, Frankfort Technical Report (October 1977).

101. R. J. Pilie et al., Methods to Treat, Control and Monitor Spilled Hazardous Materials, EPA-670/2-75-042 (June 1975).

102. J. L. Buckley and S. A. Wiener, Hazardous Material Spills: A Documentation and Analysis of Historical Data, EPA-600/2-78-066 (April 1978).

103. National Lime Association, Lime Handling Application and Storage, Bulletin No. 213 (May 1976).

104. The Chlorine Institute, New York City, Chlorine Manual, 1969.

105. The Chlorine Institute, New York City, Chlorine Tank Can Unloading, Pamphlet No. 61 (February 1975).

106. The Chlorine Institute, New York City, Facilities and Operating Procedures for Chlorine Storage, Pamphlet No. 5 (October 1977).

107. The Chlorine Institute, New York City, Emergency Shutoff Facilities for Chlorine Tank Can Loading and Unloading Operations, Pamphlet No. 57 (Feb. 2, 1965).

108. The Chlorine Institute, New York City, Container Procedure for Chlorine Packaging, Pamphlet No. 7 (December 1973).

109. Murray P. Strier, EPA, Treatability of Organic Priority Pollutants, Part C, Their Estimated (30-day Average) Treated Effluent Concentration——A Molecular Engineering Approach (July 11, 1978).

110. George A. Schultz, "In-Plant Handling of Bulk Materials in Packages and Containers," Chemical Engineering, Deskbook Issue, pp. 29—38 (Oct. 30, 1978).

111. Philip Newton, W. R. Von Tress, and J. S. Bridges, "Liquid Storage in the CPI," Chemical Engineering, Deskbook Issue, pp. 9—15 (Apr. 3, 1978).

112. Leon R. Kileny and Harry Scheffer, "Liquid Transportation Technology," Chemical Engineering, Deskbook Issue, pp. 17—23 (Apr. 3, 1978).

113. H. Heukelekian and M. C. Rand, "Biochemical Oxygen Demand of Pure Organic Compounds," Sewage and Industrial Waste, pp. 1040—1053 (September 1955).

114. J. J. Bulloff and J. R. Sinclair, "Agents for Amelioration of Discharger of Hazardous Chemicals on Water," pp. 227—287 in Proceedings of 1976 National Conference on Control of Hazardous Material Spills, New Orleans, Louisiana.

115. C. H. Ward, J. L. Breyette, and C. E. Sanner, Rice University, "Regulatory Review," Vol. IV of Report of Activities February 1976—December 1977 Research on Hazardous Substances in Support of Spill Prevention Regulations (January 1978).

116. C. H. Ward, J. L. Breyette, L. K. Holder, Rice University, "Data Sheets, Part 1," Vol. V of Reports of Activities February 1976—December 1977 Research on Hazardous Substances in Support of Spill Prevention Regulations (January 1978).

117. C. H. Ward, J. L. Breyette, and L. K. Holder, "Data Sheets, Part 2," Vol. V of Reports of Activities February 1976—December 1977 Research on Hazardous Substances in Support of Spill Prevention Regulations (January 1978).

118. C. H. Ward and M. W. Curtis, Rice University, "Toxicology," Vol. VI of Reports of Activities October 1976—December 1977 Research on Hazardous Substances in Support of Spill Prevention Regulations (January 1978).

119. C. H. Ward et al., Rice University, "Categorization," Vol. II of Reports of Activities February 1976—December 1977 Research on Hazardous Substances in Support of Spill Prevention Regulations (January 1978).

120. National Council of the Paper Industry for Air and Steam Improvement, Inc., Spill Prevention and Control Aspects of Paper Industry Wastewater Management Programs, Stream Improvement Bulletin No. 276 (August 1974).

121. National Fire Protection Association, Fire Protection Guide on Hazardous Materials, 6th ed., 1975.

122. Manufacturing Chemists Association, Housekeeping in the Chemical Industry, Safety Guide SG-2 (March 1960).

123. Manufacturing Chemists Association, Loading and Unloading Corrosive Liquids, Technical Bulletin TC-27 (1975).

124. Manufacturing Chemists Association, Loading and Unloading Liquid Caustic Tank Cars, Technical Bulletin TC-28 (1975).

125. Manufacturing Chemists Association, A Guide for Landfill Disposal of Solid Waste, Technical Guide SW-1 (1974).

126. Philip Powers, How to Dispose of Toxic Substances and Industrial Wastes, Noyes Data Corporation, Park Ridge, NJ (1976).

127. "Development of a Kit for Detecting Hazardous Material Spills in Waterways," Environmental Protection Technology Series, March 1978, EPA-600/2-78-055.

128. USEPA, Hazardous Waste Management Division, Implementing a BMP for Residuals: The Waste Exchange, EPA-440/9-76019 (June 1976).

129. "Diversified Hauler Develops System for Handling Both Solid and Liquid Wastes," Solid Wastes Management/RRJ, pp. 16—18 (January 1978).

130. W. Walker, "Monitoring Toxic Chemicals in Land Disposal Sites," Pollution Engineering, pp. 50—53 (September 1974).

131. J. Lafornara, "Cleanup After Spills of Toxic Substances," Journal of the Water Pollution Control Federation, pp. 617—627 (April 1978).

132. R. H. Hiltz and F. Foehlich, Emergency Collection System for Spilled Hazardous Materials, EPA-600/2-72-162 (August 1977).

133. Iowa Department of Environmental Quality, Sanitary Landfill Operator's Manual, NITS PB-268-708 (May 1977).

134. PEDCO Environmental, Inc., Cincinnati, Ohio, Residual Waste Best Management Practices: A Water Planner's Guide to Land Disposal, NTIS PB-258-849 (June 1976).

135. Environmental Protection Agency, The Report to Congress: Waste Disposal Practices and Their Effects on Ground Water—Executive Summary, NTIS PB-265-364 (January 1977).

136. EPA, Washington, D.C., Assessment of Industrial Hazardous Waste Practices, Rubber and Plastics Industry, Appendices, NTIS PB-282-073 (March 1978).

137. Manufacturing Chemists Association, A Guide for Contract Disposal of Solid Waste, Technical Guide SW-2 (1974).

138. Manufacturing Chemists Association, A Guide for Subsurface Injection of Waste Fluids from Chemical Manufacturing Plants, Technical Guide WR-1 (1976).

139. Manufacturing Chemists Association, A Guide for Incineration of Chemical Plant Wastes, Technical Guide SW-3 (1974).

140. Manufacturing Chemists Association, Recommendations for Covered Hopper Cars Equipped with Vacuum Pneumatic Outlets for Transport of Dry Bulk Chemicals and Plastics, Technical Bulletin TC-13 (1970).

141. R. H. Hiltz and J. V. Friel, "Application of Foams to the Control of Hazardous Chemical Spills," pp. 293—302 in Proceedings of 1976 National Conference on Control of Hazardous Material Spills, New Orleans, Louisiana.

142. Manufacturing Chemists Association, Recommendations for Facilities for Receipt of Dry Bulk Chemicals and Plastics in Pneumatic Hopper Highway Vehicles, Technical Bulletin TC-12 (1970).

143. Manufacturing Chemists Association, Recommendations for Preloading Inspection of Single Compartment Pneumatic Hopper Highway Vehicles for Transport of Dry Bulk Chemicals and Plastics, Technical Bulletin TC-14 (1970).

144. Manufacturing Chemists Association, Recommendations for Facilities for Receipt of Dry Bulk Chemicals and Plastics in Pressure Differential Hopper Cars, Technical Bulletin TC-16 (1971).

145. Manufacturing Chemists Association, Recommendations for Facilities for Receipt of Dry Bulk Chemicals and Plastics in Covered Hopper Cars Equipped with Vacuum-Pneumatic Outlets, Technical Bulletin TC-17 (1971).

146. Manufacturing Chemists Association, Recommendations for Terminal Facilities for Pneumatic Transfer of Dry Bulk Chemicals and Plastics, Technical Bulletin TC-18 (1977).

147. J. R. Hyland, Control of Oil and Other Hazardous Materials, EPA-430/1-74-005 (June 1974).

148. Roy F. Weston, Inc., Pollution Prediction Techniques for Waste Disposal Siting, A State-of-the-Art Assessment, NTIS PB-283-572 (1978).

149. "National Resources Defense Council vs. Train," Consent Decree 8, Environmental Reporter Cases, pp. 2121—2136 (June 8, 1976).

150. R. C. Mitchell, J. J. Vrolyk, and R. W. Melvold, "Prototype System for Plugging Leaks in Ruptured Containers," p. 225 in Proceeding of 1976 National Conference on Control of Hazardous Material Spills, New Orleans, Louisiana.

151. R. C. Mitchell et al., "Methods for Plugging Leaking Chemical Containers," pp. 103—107 in Proceedings of 1972 National Conference on Control of Hazardous Material Spills, Houston, Texas.

152. R. Cleary and D. Aldrian, "New Analytical Solutions for Dye Diffusion Equations," American Society of Civil Engineers, Environmental Engineering, pp. 213—227 (June 1973).

153. N. Yotsukura and F. Kilpatrick, "Tracer Simulation of Soluble Waste Concentration," American Society of Civil Engineers, Environmental Engineering, pp. 499—515 (August 1973).

154. O. Road and E. Holly, "Critical Oxygen Deficit for Bank Outfall," American Society of Civil Engineers, Environmental Engineering, pp. 661—678 (June 1974).

155. H. Liu, "Predicting Dispersion Coefficient of Streams," American Society of Civil Engineers, Environmental Engineering, pp. 59—69 (February 1977).

156. E. P. Holley, Transversal Mixing in Rivers, Delft Hydraulics Lab, University of Illinois, Urbana (December 1971).

157. W. Stumm and J. J. Morgan, Aquatic Chemistry, Wiley-Interscience, New York, 1970.

158. K. Verschueren, Handbook of Environmental Data on Organic Chemicals, Van Nostrand, Reinhold, New York, 1977.

159. R. C. Koh, and Loh-Nien Fan, Mathematical Models for the Prediction of Temperature Distributions Resulting from the Discharge of Heated Water into Large Bodies of Water (October 1970) (on file at EPA, Washington, D.C.).

160. P. A. Jensen and R. W. Hann, The Interrelationships of Material Toxicity, Stream Properties and Quality of Spilled Material in Assessing the Risk of Hazardous Material Spills, Texas A&M University (May 1975).

161. R. V. Thomann, Systems Analysis and Water Quality Management, Environmental Sciences Services Division, Environmental Research and Applications, Inc., New York, 1972.

162. Environmental Protection Agency, "Hazardous Waste, Proposed Guidelines and Regulations and Proposal on Identification and Listing," Federal Register 43(243), Part IV, p. 58946—59028 (December 18, 1978).

163. Environmental Protection Agency, "Waste Quality Criteria," Federal Register 43(97), 21506—21518 (May 18, 1978).

TECHNICAL BULLETINS

Technical bulletins for specific toxic and hazardous compounds are normally available to the general public and were requested and obtained through telephone contacts with the industry and through questionnaires. The technical bulletins were reviewed to obtain information relative to BMPs for specific chemicals. Technical bulletins were received from several industries and are referred to as Material Safety Data Sheets by Union Carbide, Shell Chemical Company, and Celanese Chemical, as Technical Data Sheets by the Dow Chemical Company, and as Chemical Safety Data Sheets by the Manufacturing Chemists Association. A complete list of the technical bulletins reviewed during the project follows.

Typical contents of these technical bulletins include information on specific chemicals relative to physical and chemical properties, hazardous ingredients, fire and explosive hazards, health hazards, reactivity, spill or leak procedures, special safety precautions, and loading and unloading precautions. Information obtained from these technical bulletins relative to BMPs for specific chemicals is summarized in Appendix C.

Technical Bulletins

Reference Numbers	Chemical	Company
T1	Dursban	Dow Chemical
T2	Methylenechloride	Dow Chemical
T3	Chlorobenzene Dichlorobenzene Trichlorobenzene	Dow Chemical
T4	Trichloroethylenes	Dow Chemical
T5	Methylchloride	Dow Chemical
T6	Pentachlorophenol	Dow Chemical
T7	Chlorine	Chlorine Institute
T8	Acetic anhydride	Union Carbide
T9	Butyl acetate	Union Carbide
T10	Ethylenediamine	Union Carbide
T11	Formic acid, glacial	Union Carbide
T12	Formic acid, 90%	Union Carbide
T13	Phenol	Union Carbide
T14	Propionic acid	Union Carbide
T15	Toluene	Union Carbide
T16	Triethylamine	Union Carbide
T17	Carbaryl	Union Carbide
T18	Carbaryl 50%	Union Carbide
T19	Carbaryl 85%	Union Carbide
T20	Carbaryl 95%	Union Carbide
T21	Carbaryl 97.5%	Union Carbide
T22	Acetic acid	Union Carbide
T23	Acrolein	Union Carbide
T24	Benzene	Union Carbide
T25	Butyric acid	Union Carbide
T26	Diethylamine	Union Carbide
T27	Ethylbenzene	Union Carbide
T28	Methyl chloride	Union Carbide
T29	Vinyl acetate	Union Carbide
T30	Amyl acetate	Union Carbide
T31	Xylene	Union Carbide
T32	Styrene	Union Carbide
T33	Hydrochloric acid	Union Carbide
T34	Acrolein	Shell Chemical
T35	Allyl alcohol	Shell Chemical
T36	Epichlorohydrin	Shell Chemical
T37	Allyl chloride	Shell Chemical

Technical Bulletins (Continued)

Reference Numbers	Chemical	Company
T38	Vinyl chloride	Shell Chemical
T39	Para-Xylene	Shell Chemical
T40	Ortho-Xylene	Shell Chemical
T41	Xylene	Shell Chemical
T42	Toluene	Shell Chemical
T43	Cyclohexane	Manufacturing Chemists Association
T44	Sulfuric acid	Manufacturing Chemists Association
T45	Tetrachloroethane	Manufacturing Chemists Association
T46	Maleic anhydride	Manufacturing Chemists Association
T47	Nitrobenzene	Manufacturing Chemists Association
T48	Nitric acid	Manufacturing Chemists Association
T49	Paraformaldehyde	Manufacturing Chemists Association
T50	Caustic potash (potassium hydroxide)	Manufacturing Chemists Association
T51	Phosphorus	Manufacturing Chemists Association
T52	Hydrofluoric acid	Manufacturing Chemists Association
T53	Phosphorus oxychloride	Manufacturing Chemists Association
T54	Phosphorus trichloride	Manufacturing Chemists Association
T55	Chlorosulfonic acid	Manufacturing Chemists Association
T56	Methyl bromide	Manufacturing Chemists Association
T57	Hydrochloric acid	Manufacturing Chemists Association
T58	Acetic acid	Manufacturing Chemists Association
T59	Ammonium dichromate	Manufacturing Chemists Association
T60	Sodium	Manufacturing Chemists Association
T61	Benzyl chloride	Manufacturing Chemists Association
T62	Allyl chloride	Manufacturing Chemists Association
T63	Vinyl acetate	Manufacturing Chemists Association
T64	Diethylamine	Manufacturing Chemists Association
T65	Acetic anhydride	Celanese Chemical
T66	Acetic acid	Celanese Chemical
T67	Benzene	Celanese Chemical
T68	Chlorine	Manufacturing Chemists Association
T69	Phosgene	Manufacturing Chemists Association

INDUSTRIAL CONTACTS

A list of the industrial contacts that were made follows the list of technical bulletins reviewed.

Industrial Contacts*

Reference Numbers	Description
S1	Site visit - Procter and Gamble Cincinnati, Ohio
S2	Site visit - Hooker Chemical Company, Niagara Falls, New York
S3	Site visit - Allied Chemical Company, Hopewell, Virginia
P1	Phone contact - Allied Chemical Company
P2	Phone contact - Union Carbide Corporation
P3	Phone contact - Shell Chemical Company
P4	Phone contact - Stauffer Chemical Company
P5	Phone contact - Celanese Chemical Company
P6	Phone contact - E. I. du Pont de Nemours & Co.,Inc.
R1	Questionnaire Response - Celanese Chemical Company
R2	Questionnaire Response - Shell Chemical Company
R3	Questionnaire Response - Union Carbide Corporation

*See Appendix D for synopses of site visits and telephone contacts and for questionnaire responses from the chemical companies.

Appendix B

BMP KEYWORD SUMMARY

BMP	References
BASELINE	
Spill committee	1,2,5,12,18,57,78,83,100
Spill reporting	1,2,3,8,9,12,15,22,44,49,54,78,83,100
Materials compatability	6,43,44,50,53,64,85,111,112,138,P4, P1,T44,T48,T58
Materials inventory	12,78,83,100
Visual inspection	2,4,5,7,9,12,13,21,24,27,29,40,44,45, 57,83,100,104,106,108,123,124,125, 143,144,145,146,P4,R1,T5,T43,T44,T46, T47,T48,T50,T52,T53,T54,T55,T56,T57, T61,T64,R3
Security	2,26,45,50,61,83,100
Employee training	1,2,5,8,12,44,78,83,84,100,104,105, T43-T64,R3
Preventive maintenance	1,4,5,12,13,21,42,43,53,106
Good housekeeping	1,4,5,12,13,21,42,43,53,122,P2,R3
ADVANCED	
Prevention	
Monitoring/instrumentation	3,4,5,7,8,9,12,13,21,25,26,28,29,40, 41,42,44,45,53,54,57,60,68,78,83,100, 105,106,107,125,130,138,T3,T4,T43, T45,T46,T47,T48,T49,T50,T52,T53,T54, T56,T57,T62,R3
Nondestructive testing	4,40,44,46,100,106,112,R1,R3
Labeling	5,21,50,61,111,125,T35,T36,T37,P4, T43-64
Covering	7,11,61,67,68,103,R1,R3
Pneumatic/vacuum conveying	50,103,124,140,142,143,144,145,146, T44,T48,T52,T53,T54,T55,T57,T60,R3
Vehicle positioning	123,124,T5,T48,T53,T54,T55,T57, T61-T64
Dry cleanup	5,50,T49,T50,T59,R3

BMP	References
Containment	
Secondary containment	1,2,3,4,5,6,7,9,10,11,12,13,17,21, 24,29,32,44,46,47,49,50,52,53,54,57, 61,62,68,78,83,100,112,125,T11,T14, T16,T22,T26,T29,T35,T36,T37,T38,T41, T42,T66,T67,P1,P2,P4,S2,S3,R1,T63,R3
Flow diversion	5,7,10,11,12,13,17,26,57,66,78,T43,R3
Vapor control	35,36,57,59,S3,T2,T3,T38,T44,T45,T46, T52,T54,T55,T56,T57,T58,T61-T63,R3
Dust control	50,103,110,142,144,145,146,T17,R3
Sealing	6,7,30,31,60,150,151
Mitigation	
Cleanup	
Gelling agents	2,9,24,31,33,34,47,49,60,101
Foams	36,49,59,60,101,141,P1,T23,T34,R3
Sorbents	2,9,24,33,34,36,47,49,60,100,101,114, T13,T35,T37,T41,T42,T67,T45,T48,T53, T54,T55,T63
Physical methods	S3,T17,P1,P2,T13,P4
Mechanical methods	9,47,60,78,T34,T35,R3
Treatment	
General	49,89,90,91,92,94,98,109,126
Carbon adsorption	49,61,109,126
Volatilization	109,126
Liquids-solids separation	9,12,22,24,49,61,62,109,126,134
Ion exchange	49,61,101,114,134
Neutralization	9,12,22,23,32,52,53,57,101,114,126, 134,S2,R1,T65,T44,T46,T48,T50,T52, T53,T55,T58,T60,T61,R3
Coagulation/precipitation	9,12,22,24,49,61,62,101,T59
Incineration	12,54,61,63,101,126,134,139,T4,T6,T7, T8,T9,T10,T13,T14,T15,T22,T23,T24, T25,T26,T27,T28,T34,T35,T36,T37,T41, T42,T65,T66,T67,S2,T43,T46,T47,T49, T57,T60,T61,T62,T63,T64
Biological	48,49,61,109,126,134,T55,T58
Chemical oxidation	32,126,134
Ultimate Disposition	
General	58,61,65,69,89,90,126,128,139,155
Deep-well injection	7,54,61,63,126,138
Landfill	18,54,61,63,64,125,126,133,134,T4, T17,T41,T42,T67,T46,T47,T49,R3
Surface impoundments	6,7,12,30,61,63,120,P2,T44
Ocean disposal	44,61,126,T44,T6,R3
Direct discharge	10,11,12,100,126,T44,T63,R3
Reclamation	12,52,61,63,65,126,P1,P2,S2,S3,P4,T4, T41,R3
Municipal system	11,T47
Contract disposal	65,68,128,137,S2,T51

Appendix C

BMPs FOR SPECIFIC TOXIC AND HAZARDOUS CHEMICALS

Specific Compound or Group	BMPs Identified	Reference Number
Acetaldehyde	Diversion, drainage control, holding ponds, waste treatment	7
	Incineration	T7
Acetic anhydride	Incineration	T8
	Incineration, neutralization	T65
Acetic acid	Containment, incineration	T22
	Dikes, incineration	T66
	Diversion, drainage control, holding ponds waste treatment	7
	Vapor control, employee training, labeling, biological treatment, neutralization	T58
Acid	Containment, curbs, dikes, catchment basins	10
	Neutralization	23
	Dead-end sumps, ditches, curbing, good housekeeping, preventive maintenance	1
	Crushed lime, bicarbonate, soda ash	23
	Dikes, high-level alarms	57
Acrolein	Dikes, neutralization, water spray, foam, treatment	57
	Foams, sodium sulfite, incineration	T23
	Foams, vacuum trucks, controlled burning	T34
Acrylonitrile	Sorbents	34
	Concrete diked areas	57
Adipic acid	Dry cleanup	53

Specific Compound or Group	BMPs Identified	Reference Number
Allyl alcohol	Sorbents, dikes, vacuum trucks, labeling, controlled burning	T35
Allyl chloride	Sorbents, containment, labeling, controlled burning	T37
	Vapor control, monitoring (vapor), employee training, labeling, vehicle positioning, incineration	T62
Ammonium dichromate	Labeling, dry cleanup, employee training, chemical precipitation	T59
Benzene	Sorbents	34
	Foam, vapor control	59
	Incineration	T24
	Sorbents, dikes, incineration, landfill	T67
Benzyl chloride	Employee training, labeling, visual inspection, vehicle positioning, vapor control, neutralization, incineration	T61
Butyl acetate	Incineration	T9
	Foam, vapor control	59
Butyric acid	Incineration	T25
Calcium hydroxide	Flow diversion	57
Carbaryl	Dust control, drip pans, good housekeeping, dry cleanup, vacuum cleanup devices, visual inspection, sand bag containment, reclamation, landfill, pneumatic conveying, employee training	R3
	Dust control, dry cleanup, landfill with lime or caustic	T17
Chlorinated organics	Dead-end sumps, diking, curbing, good housekeeping, preventive maintenance	1

Specific Compound or Group	BMPs Identified	Reference Number
Chlorine	Alkaline absorption monitoring, liquid-level alarms, water spraying, foam, neutralization, nondestructive testing	R3
	Covering (roof)	R1
	Dead-end sumps, diking, curbing, good housekeeping, preventive maintenance	1
	Increased inspections, redundant instrumentation, labeling	P4
Chlorobenzenes	Level alarms, vapor control, pump transfer (no air transfer)	T3
Chlorosulfonic acid	Employee training, labeling, pneumaticconveying, vehicle positioning, visual inspection, vapor control, sorbent, neutralization, biological treatment	T55
Corrosive liquids	Dikes, flow diversion, waste treatment, direct discharge	R3
	Visual inspection, nondestructive testing	R1
	Dikes	P1
	Separate dikes	P2
	Containment, materials compatability	P4
Cyclohexane	Monitoring (vapor), labeling, visual inspection, drains, curbs, incineration, employee training	T43
	Employee training, labeling, vehicle positioning, visual inspection, incineration	T64
Diethylamine	Containment to treatment plant incineration	T26
Diethylether	Foam, vapor control	59
Dry chemicals	Dry cleanup, good housekeeping, reclamation	P2
	Dry cleanup, reclamation	P1

Specific Compound or Group	BMPs Identified	Reference Number
Epichlorohydrin	Dikes	T36
Ethyl benzene	Foams, vapor control	59
	Incineration	T27
Ethyl ether	Foams, vapor control	59
Ethylenediamine	Incineration	T10
Ferric chloride	Sorbents	34
Flammables	Foams	P1
Formaldehyde	Sorbents	34
Formic acid	Containment, incineration	T11
Hydrochloric acid	Vapor control, monitoring (vapor), employee training, labeling, neutralization, visual inspection, vehicle positioning, pneumatic conveying	T57
Hydrofluoric acid	Containment, neutralization	52
	Dead-end sumps, diking, curbing, good housekeeping, preventive maintenance	1
	Neutralization, employee training, labeling, vapor control, pneumatic conveying, visual inspection, monitoring, alkaline absorption (vapors)	T52
Human poisons	Dust control, drip pan, good housekeeping, dry cleanup, vacuum cleanup devices, visual inspection, sand bags, reclamation, landfill, pnuematic conveying, employee training, dikes, flow diversion, waste treatment	R3
Maleic acid	Dikes, materials compatability	P1

Specific Compound or Group	BMPs Identified	Reference Number
Maleic anhydride	Employee training, labeling, monitoring (vapor) visual inspection, vapor control, neutralization, landfill, incineration	T46
Methyl bromide	Employee training, vapor control, labeling, visual inspection, monitoring (vapors)	T56
Methyl chloride	Stop source of leak, incineration	T28
	Vehicle positioning, inspection	T5
Methylene chloride	Vapor control	T2
Nitric acid	Employee training, monitoring (vapors), labeling, sand sorbents, pneumatic conveying, materials compatability, visual inspection, vehicle positioning, neutralization	T48
	Sorbents	34
Nitrobenzene	Monitoring (vapors), employee training, labeling, visual inspection, incineration, landfill, municipal sewage system	T47
Paraformaldehyde	Monitoring (vapors), employee training, explosion relief devices, labeling, dry cleanup, incineration, landfill	T49
PCBs	Covering, curbing, visual inspection, labeling	R3
	Surface impoundment	P2
	Contract disposal	52
	Dead-end sumps, diking, curbing, good housekeeping, preventive maintenance	1
Pesticides	Dead-end sumps, incineration	52

Specific Compound or Group	BMPs Identified	Reference Number
Phenol	Sorbents	34
	Sorbents, dry cleanup, incineration	T13
	Sorbents, nondestructive testing, monitoring, containment, security, drip pans, depressed areas, inspections	100
	Dikes, sumps, paving, reclamation	53
Phosgene	Alkaline absorption, monitoring, doubled-walled tanks, cathodic protection, alarms (pressure, temperature, and liquid level)	R3
	Increased inspections, redundant instrumentation, labeling	P4
Phosphoric acid	Containment, dikes, holding ponds, storage	6
	Sorbents	34
Phosphorus	Employee training, labeling, contract disposal, incineration	T51
Phosphorus oxychloride	Employee training, labeling, monitoring, visual inspection, pneumatic conveying, vehicle positioning sorbents, neutralization, vapor control	T53
Phosphorus trichloride	Monitoring, employee training, labeling, sand sorbent, vapor control, visual inspection, vehicle, positioning, neutralization, pneumatic conveying	T54
Potassium hydroxide	Employee training, monitoring (vapors), labeling, dry cleanup, neutralization, materials compatability, visual inspection	T48
Propionic acid	Containment, incineration	T14
Sodium	Employee training, labeling, vacuum conveying, incineration, neutralization	T60

Specific Compound or Group	BMPs Identified	Reference Number
Sodium hydroxide	Sorbents	34
	Dead-end sumps, curbing, good housekeeping, preventive maintenance	1
	Containment, neutralization, reclamation	52
	Dikes, sumps, paving, reclamation	53
	Curbing	57
Sodium hypochlorite	Containment, chemical treatment, neutralization, chemical oxidation	32
Solids	Dry cleanup, reclamation	P4
Solvents	Containment, sumps, neutralization	R1
Styrene	Containment, chemical treatment neutralization, chemical oxidation	32
Sulfuric acid	Labeling, employee training, materials compatability, visual inspection, pneumatic conveying, vapor control, neutralization, surface impoundments, direct discharge	T44
	Containment, sumps, neutralization	R1
	Containment, treatment	32
	Dikes, sumps, paving, reclamation,	53
	Sorbents	34
Tetrachloroethane	Monitoring (vapors), vapor control, sorbents, employee training, labeling	T45
Trichloroethylene	Reclamation, incineration, landfill	T4
	Dead end sumps, diking, curbing, good housekeeping, preventive maintenance	1
Triethylamine	Containment, incineration	T16
	Foam, vapor control	59

Specific Compound or Group	BMPs Identified	Reference Number
Toluene	Incineration	T15
	Dikes, sorbents, incineration, land burial	T42
	Sorbents	34
	Foam, vapor control	59
Vinyl acetate	Containment, treatment	T29
	Waste treatment	7
	Vapor control, monitoring, employee training, labeling, vehicle positioning, dikes, incineration, direct discharge, sorbent (paper)	T63
Vinyl chloride	TV inspection	45
	Dikes, water spraying	T38
Volatiles	Forced dispersal, heating, burning, water spraying	35
Xylene	Dikes, sorbents, reclamation, incineration landfill	T41

Appendix D

SUMMARY OF INDUSTRIAL SURVEY

This appendix consists of a synopsis of telephone contacts and site visits for obtaining information relative to BMPs in the chemical, pulp and paper, and soap and detergent industries. It also includes questionnaire responses from several chemical companies.

When the reference number given in the "Telephone Contact" section is preceded by a P, it refers to the phone number listed under "Industrial Contacts" in Appendix A. When it is preceded by an R, it refers to the questionnaire response listed in the same section of Appendix A. When it is not preceded by a number, the reference can be found in the "Articles and Reports" section of Appendix A.

TELEPHONE CONTACT

Reference No: P1

Date: November 14, 1978

Company: Allied Chemical Company

Location: Discussed Allied plants in general

Contact: Mr. Bob Fawcett, Morristown, New Jersey

Toxic and Hazardous Substances: phenol, sulfuric acid, ammonia, maleic acid

BMPs Utilized: Secondary containment, foams, vapor control, recovery, inspections, flow diversion, nondestructive testing

BMPs for Specific Chemicals:

Corrosive liquids	- dikes
Maleic acid	- dikes with acid resistant materials
Ammonium hydroxide	- vapor control (double walled tank)
Flammables	- foams used for fire protection
Dry chemicals	- dry cleanup and reclamation
Phenol	- dikes, reclamation

BMPs for Specific Ancillary Sources:

Material storage	- secondary containment, vapor control, foams, dry cleanup
Loading/unloading	- paving to sumps, trenches to sumps

General Comments:

1. Secondary containment BMPs are the same for all liquids regardless of chemical.
2. In most cases materials that are contained are pumped out of containment for recovery.
3. Inspections frequencies for storage tanks should be related to the volume of material and the corrosiveness of the material.

References: 83, 100, 53

TELEPHONE CONTACT

Reference No: P2

Date: November 28, 1978

Company: Union Carbide Corporation

Location: Union Carbide plants in general

Contact: Mr. Ed Hall, South Charleston, West Virginia

Toxic and Hazardous Substances: PCBs, dichlorobenzene, formic acid, hydrochloric acid, propionic acid

BMPs Utilized: Dikes, drains, materials compatability, dry cleanup, encapsulation in concrete, holding ponds, surface impoundments, good housekeeping

BMPs for Specific Chemicals:

Corrosives	- separate dikes
Solids	- dry cleanup, recovery, good housekeeping
PCBs	- surface impoundments

BMPs for Specific Ancillary Sources:

Material storage	- dikes
Runoff	- treatment, holding ponds
Loading/unloading	- dikes

General Comments:
1. Drain dikes as soon as possible for safety and fire protection.
2. RCRA guidelines followed for landfill disposal.

References: 5,R3

TELEPHONE CONTACT

Reference No: P3

Date: November 15, 1978

Company: Shell Chemical Company

Location: Discussed Shell plants in general

Contact: Mr. V.W. Wilson for Mr. John Hallett, Houston, Texas

Toxic and Hazardous Compounds: allyl alcohol, allyl chloride, epichlorohydrin

BMPs Utilized: secondary containment, inspections, materials compatability

General Comments: No detailed discussion was pursued over the phone. A specific list of questions was requested by Shell for written response by Mr. Hallett.

Reference: R2

TELEPHONE CONTACT

Reference No: P4

Date: December 5, 1978

Company: Stauffer Chemical Company

Location: Stauffer plants in general

Contact: Mr. Ed Conant, Westport, Connecticut

Toxic and Hazardous Substances: phosgene, chlorine

BMPs Utilized: inspections, redundant instrumentation, employee training, dry cleanup, labeling

BMPs for Specific Chemicals:

Phosgene and chlorine	- increased inspection, redundant instrumentation, labeling
Solids	- dry cleanup, recovery
Corrosives	- containment, materials compatability

BMPs for Specific Ancillary Sources:

Material storage	- inspection, instrumentation, containment, labeling

General Comments:
1. All liquids are contained the same way.
2. Dry chemicals are stored inside in packages, no stockpiles.
3. Dry chemicals spills are cleaned and recovered.

TELEPHONE CONTACT

Reference No: P5

Date: December 13, 1978

Company: Celanese Fibers Company

Location: Charlotte, North Carolina

Contact: Mr. James Pullen

Toxic and Hazardous Substances: acetic acid, benzene, sulfuric acid

BMPs Utilized: curbing, separate sewer, covering

BMPs for Specific Chemicals: corrosive liquids, curbing; solids, covering

BMPs for Specific Ancillary Sources: plant runoff - separate sewers

General Comments: No detailed discussion of BMPs was pursued over the phone. A specific list of questions was requested by Celanese for written response.

Reference: R1

TELEPHONE CONTACT

Reference No: P6

Date: December 12, 1978

Company: E.I. du Pont de Nemours & Co., Inc.

Location: Du Pont plants in general

Contact: Mr. Lloyd Falk, Wilmington, Delaware

BMPs Utilized: dikes, trenches, ditches, containment, dry cleanup landfill, surface impoundments

BMPs for Specific Chemicals:

Corrosives	- landfill, surface impoundments
Aromatics	- landfill, surface impoundments
Human poisons	- landfill, surface impoundments
Heavy metals	- landfill, surface impoundments

BMPs for Specific Ancillary Sources:

Bulk storage	- dikes, trenches, ditches
Plant runoff	- containment
In-plant transfer	- dry cleanup of solids

General Comment: No detailed discussions of BMPs was pursued over the phone. A specific list of questions was requested by Du Pont for written responses

Reference: 57

SITE VISIT

Reference No: S1

Company: Procter and Gamble (plants in general)

Location: Cincinnati, Ohio

Date of Visit: August 9, 1979

Attendees:

Curt Barton (P&G)	Chuck Stuewe (Hydroscience)
Jan Whitfield (P&G)	George Kehrberger (Hydroscience)
Howard Schwartzman (P&G)	Fred Craig (EPA)
Philip Deemer (P&G)	H. Thron (EPA)

Toxic and Hazardous Substances: caustic, chlorine, acids, benzene, toluene

BMPs Utilized: curbing, covering, roof drains, catchment basins, materials inventory, sumps, spills, reporting, visual inspections, materials compatability, neutralization, dry cleanup, good housekeeping, solvent traps, pressure-drop alarms, vents, cathodic protection, contract disposal, testing of new materials, spill drills

BMPs for Specific Chemical:

Acid/bases	- materials compatability, curb separately, neutralization
Solids	- good housekeeping, dry cleanup
Benzene, toluene	- containment, solvent traps

BMPs for Specific Ancillary Source:

Plant runoff	- covering, containment, segregation of wastestreams, monitoring
In-plant transfer	- vents or tanks, cathodic protection
Loading/unloading	- curbs, grading, sumps, chocks

General Comments:
1. No gravity drains are used in spill-prone areas.
2. Pumps for emptying containment are manually operated.
3. Spills are cleaned up without water where possible.
4. Operator supervision during land volume transfers.

Estimated Costs: None available

Estimated Implementation Time: No estimate available

References: 3, 10

SITE VISIT

Reference No: S2

Company: Hooker Chemicals and Plastics Corp.

Location: Niagara Falls, New York

Date of Visit: August 23, 1978

Attendees:

Steve Warner (Hooker)	C. Stuewe (Hydroscience)
James Glattly (Hooker)	E.J. Donovan (Hydroscience)
H. Thron (EPA)	F. Craig (EPA)

Toxic and Hazardous Substances: chlorine, sodium hydroxide, pesticides, acids, anhydrous hydrogen fluoride, PCBs

BMPs utilized: dikes, dead-end sumps, curbing, drip pans, monitoring, flow diversion, contract disposal, dry cleanup, employee training program, vapor control and collection to scrubber, preventive maintenance, segregation of cooling water and process sewer, materials compatability, labeling, discharge to municipal sewage system, visual inspection, centralized loading and unloading, redundant instrumentation monitoring, good housekeeping

BMPs for Specific Chemicals:

PCBs	-	contract disposal
Hydrofluoric acid	-	containment, neutralization
Sodium hydroxide	-	containment, neutralization, reclamation
Pesticides	-	dead-end sumps, incineration

BMPs for Specific Ancillary Sources:

Loading/unloading	-	centralized facilities
Plant runoff	-	covering, roof collection gutters, flow diversion
Sludge & hazardous waste disposal areas	-	labeling, materials inventory

BMP Implementation Costs: $4—5 Million

Implementation Schedule: 3 years

Reference: 1

SITE VISIT

Reference No: S3

Company: Allied Chemical Company, Fibers Division Plant

Location: Hopewell, Virginia

Date of Visit: October 25, 1978

Attendees:

Ed Giebell (Allied)	H. Thron (EPA)
Wayne Sullivan (Allied)	Fred Craig (EPA)
George Crawford (Allied)	Thomas Charlton (EPA)
J.O. Kirksey (Allied)	George Kehrberger (Hydroscience)
Bob Fawcett (Allied)	Joseph Cleary (Hydroscience)
Joe Clegg (Allied)	

Toxic and Hazardous Substances: adipic acid, ammonium sulfate, phenol sulfuric acid, sodium hydroxide

BMPs Utilized: spill control committee, spill reporting, employee training programs, visual inspections, materials compatability, security, monitoring, covering, secondary containment (dikes, curbs, sumps, holding ponds), flow diversion systems (drainage ditches, trenches, drains), dry cleanup, doubled-walled tank

BMPs for Specific Chemicals:

Adipic acid	-	dry cleanup
Phenol, sulfuric acid, caustic	-	dikes, sumps, paving
Ammonia solution	-	doubled-walled tank

BMPs for Specific Ancillary Sources:

Material storage areas	-	dikes, curbing, doubled walled tank
Loading and unloading	-	paving, sumps, reclamation
Plant runoff	-	monitoring (TOC instruments), flow diversion

Proposed BMPs: secondary containment, flow diversion

BMP Implementation Costs: Phase I - $5.2 Million (see Table D-1)

Implementation Schedule: 3 years

Table D.1. Estimated Costs of Proposed BMPs*
(Allied Chemical Company, Hopewell, Virginia, Plant)

Chemical	Ancillary Source	BMP	Capacity (gal)	Estimated Capital Dollars (as of 1978)
Ammonia solution	Loading/unloading	Curbs, paving	12,000	$ 280,000
Sulfuric acid	Material storage	Curbing	1,000	50,000
Sulfuric acid and sodium hydroxide	Material storage and loading/unloading	Relocate tanks, dikes paving, drains	17,000	400,000
Ammonia solution	Material storage	Dikes, drains	18,000	190,000
Ammonia sulfuric and sodium hydroxide	Material storage, loading/unloading	Sewer system, pump station	750 gpm	1,300,000
Ammonium hydroxide	Material storage	Dikes, paving, drains	376,000	500,000
Ammonium carbonate	Material storage	Dikes, paving, drains	4,800,000	950,000
Ammonium hydroxide	Material storage loading/unloading	Curbing, drains, sumps	132,000	700,000
EDTA	Material storage	Curbing	4,000	10,000
Sulfuric acid	Material storage	Containment, relocate pumps	480,000	100,000
Sulfuric acid	Material storage	Curbing, paving, drains	600,000	600,000
Sulfuric acid and sodium hydroxide	Loading/unloading	Curbing, paving, drains	15,000	70,000
				$5,150,000

*For toxic and hazardous substances only.

CELANESE
FIBERS COMPANY

January 9, 1979

JCP-79-08

(QUESTIONNAIRE RESPONSE—REF 1)

Mr. Joseph G. Cleary
Hydroscience, Inc.
363 Old Hook Road
Westwood, New Jersey 07675

SUBJECT: BMP Questionnaire

Dear Mr. Cleary:

Attached is the completed questionnaire on Best Management Practices for control of toxic and hazardous materials. If you have further questions, call me on 704/554-2377.

Very truly yours,

J. C. Pullen
Manager, Environmental Activities

/gh

Attachments

cc: Mr. J. D. Underwood - New York

CELANESE FIBERS COMPANY • BOX 1414, CHARLOTTE, N C 28232 • TELEPHONE. 704—554 2000
A DIVISION OF CELANESE CORPORATION

Question 1

How will the proposed regulations on Spill Prevention (SPCC) and Best Management Practices (BMP) relative to the hazardous compounds and priority pollutant affect your plants?

Answer

In addition to requiring spill containment facilities for process and storage areas, the proposed regulations will require submission of a great deal of (unnecessary) paperwork. As an example, EPA and the state must be notified in writing whenever a spill has occurred--required information will include maximum storage and handling capacity of the facility and normal daily throughput; description of the facility, including maps, flow diagrams and topographic maps; cause(s) of the spill including a failure analysis of the system or subsystem in which the failure occurred.

We also are concerned that the regulations might require collection and treatment of rain water runoff from coal storage area and process area streets. Neither of these are included in the cost estimate of question 2, but both would be very costly.

Question 2

Do you have any SPCC or BMP plans being incorporated into the design of future plants? Are these techniques any different for existing plants?

Answer

Celanese Fibers Company (CFC) does not presently have any designs in progress for new plants.

Question 3

Does your company have any experience with BMP's related to the hazardous chemicals or with chemicals you consider hazardous?

Answer

BMP's for the chemicals we handle have generally been to provide containment facilities--curbs, dikes, sumps, etc. Many of our "hazardous" chemicals are biodegradable, so any spills of these materials are directed toward the chemical sewer and biological wastewater treatment system.

Question 4

For liquids, what spill prevention practices are utilized? Are these practices any different for aromatic compounds such as a benzene and toluene versus a corrosive liquid such as sulfuric acid? How are corrosive liquids contained? Are all liquids handled the same relative to spill prevention and secondary containment?

Answer

Hazardous liquid tanks are placed within diked or curbed areas, or are buried underground. The tanks are equipped with high level alarms, and overflow pipes are directed toward chemical sewers, if possible. Chemical sewers are equipped with pH alarms, and in some plants, a Total Organic Carbon analyzer monitors the main chemical sewer for solvent spills. Spill prevention practices are essentially identical for acids and solvents in our plants. Secondary containment will differ in that major acid spills are neutralized and diluted in the equalization ponds before they are sent to w/w treatment, while solvents are simply diluted.

Question 5

Along the lines of spill prevention, containment, cleanup and disposal, what practices are utilized for solids such as adipic acid?

Answer

CFC plants do not handle any hazardous solids except lime, which is kept inside buildings in bagged form.

Question 6

How is chlorine or other gases handled relative to BMP's for prevention and containment of spills?

Answer

Chlorine cylinders are kept in a remote area, under roof. No spill facilities are provided.

Question 7

Do you conduct inspection programs for evaluating condition of storage tanks, pipelines, valves, pumps, etc.? How frequent are these inspections and are they visual, structual testing or both?

Answer

The plants visually inspect tanks, pipes, valves, and pumps on a non-routine basis. Tanks in corrosive service are checked for metal thickness every 2-3 years. When material balances indicate excessive chemical losses, equipment and piping are checked thoroughly.

Question 8

Are spill prevention and containment measures any different depending on the potential source of the hazardous chemical spill, such as: material storage area, loading and unloading areas, inplant transfers and handling, runoff from plant site, and sludge or hazardous material disposal sites? What are the practices used for these potential sources of hazardous material spills?

Answer

In our plants, the primary factors which effect containment facilities are (1) the chemical or solvent itself, (2) the distance to a chemical sewer and (3) the potential quantity of a spill.

For a material such as a strong acid (H_2SO_4), containment will be in a sump to allow neutralization before directing the material to the chemical sewer. For a weak acid (acetic), the material will generally flow directly to trenches and/or sewers to the w/w treatment facilities. Solvents are generally treated the same as weak acid.

In a remote area, such as an unloading station, containment may be a sump. Any spill would then have to be pumped to the chemical sewer. In the (storage) tank farm, the volumes are so great that earthen dike containment is used.

Question 9

How would you dispose of a hazardous material if contained in a dike or sump? Would the chemicals be for example: reclaimed, drained to the process wastewater for treatment, disposed or in landfill? Would these procedures be any different for acetic acid, benzene, sulfuric acid or any of the other chemicals handled at the plant?

Answer

Large quantities (over 1000 lbs.) of contained spilled materials will be reclaimed if possible. Most of our spills are drained to the w/w treatment facilities. Occasionally, an acid spill in a remote sump will be neutralized and landfilled. Reclaiming is frequently precluded by contamination of the desired material.

Question 10

What practices are used to control hazardous chemicals from entering the plant runoff?

Answer

Spills in our plants can enter the storm sewer system only through manhole covers. Our usual practice to prevent this is to sandbag the cover until the spill is cleaned up. In addition, oily materials are trapped by an oil boom before the final outfall.

Question 11

Can you supply us with any cost information relative to developing and implementing (e.g., by area, by chemical, by plant) a BMP plan at your plant? Can you provide us with a project timing schedule to implement a BMP plan?

Answer

We presently have in one of our plants an approved appropriation to install SPCC facilities for our process tanks and unloading stations, to modify some of the sewers, to build a diversion pond and to regrade critical areas. Cost will be $300 M, and timing will be 15-18 months.

Question 12

Could you send us any technical bulletins or other information on the specific hazardous chemicals you buy, use or make?

Answer

MSDS for acetic acid, acetic anhydride, and benzene are attached.

Question 13

Would you like to be put on our mailing list for a copy of the final report?

Answer

Yes.

Shell Oil Company

One Shell Plaza
P O Box 2463
Houston, Texas 77001

February 6, 1979

(QUESTIONNAIRE RESPONSE—Ref 2)

Mr. Joseph G. Cleary
Hydroscience, Inc.
363 Old Hook Road
Westwood, NJ 07675

Dear Mr. Cleary:

Your letter of November 16, 1978 requested response to a series of questions relating to Best Management Practices (BMP) for chemical manufacturing, several of which identified specific Shell products. Shell has always participated to the greatest extent possible in assisting EPA and its contractors in the development of effective and realistic regulations; despite the delay in our response, this is no exception.

We have given the BMP matter considerable and careful thought, and find that our response must be constrained by what we believe to be the legislative intent regarding BMP for industry, as set forth at Section 304(e) of the Clean Water Act (CWA). Unfortunately, it appears from several aspects that EPA's approach to BMP exceeds the bounds set forth in both the law and its legislative history. The proposed rules relating to BMP and the introductory narrative to your "BMP Questions" reflect the agency-broadened approach. Rather than reiterate our position on this matter here, we attach our letter of November 17, 1978 to EPA, which conveys that position.* In addition, we draw your attention to the similar posture taken by the Manufacturing Chemists Association in their November 17, 1978 statement to EPA on the same proposed rules. Finally, as our assessment of BMP contemplates SPCC requirements, we attach a copy of our November 17, 1978 statement to EPA on SPCC proposed regulations.

Within the constraints of our position, we have responded to your questionnaire as best we can. Hopefully, as this matter progresses, a more precise definition of BMP will be established and more specific response can be made.

Along with our response and the referenced statements, we enclose materials requested in Question 12. Please contact us if we can be of further assistance.

Very truly yours,

J. D. Hallett, Staff Engineer
Environmental Affairs

JDH:ddj

Attachments

cc: Mr. Howard Schwartzman, Proctor & Gamble

Note by authors: Letter not reprinted here.

1. How will the proposed regulations on Spill Prevention (SPCC) and Best Management Practices (BMP) relative to the hazardous compounds and priority pollutant affect your plants?

We assume, first, that the yet to be established hazardous substances will be essentially the same as those promulgated under the earlier list, now in abeyance. Second, our response is based on the premise that SPCC regulations for hazardous substances are similar in scope to those currently in place for oil, and further, that BMP regulations reflect precisely Congressional intent and statutory authority, no more. On this basis, we would anticipate the expenditure of modest capital and expense monies in developing and implementing SPCC plans at each site. Should the agency's current approach on an expanded definition of BMP prevail, however, extensive time, money and effort will likely be expended.

2. Do you have any SPCC or BMP plans being incorporated into the design of future plants? Are these techniques any different for existing plants?

Shell incorporates SPCC plan requirements for oil as a matter of practice, as we do for those chemicals we consider hazardous, despite the lack of any regulatory requirement for the latter. When SPCC plan regulations are developed for EPA's hazardous materials, we will incorporate whatever additional SPCC or BMP practices and facilities may be required. With regard to BMP, Shell believes it already practices BMP through application of standards, use of SPCC plan facilities and as a matter of corporate policy. Note should be taken that in keeping with this belief, Shell has applied such standards and practices for those materials it considers appropriate whether or not they appear on the hazardous substances list and/or the toxic substances list.

As to differences between SPCC/BMP plans at existing and future plants, we submit that differences are extremely likely, since each facility must be evaluated on its own merits. Some such differences could be insignificant, others vast.

3. Does your company have any experience with BMP's related to the hazardous chemicals or with chemicals you consider hazardous?

Yes, we consider BMP to be largely a matter of good judgment and sound engineering practice.

4. a) For liquids, what spill prevention practices are utilized? b) Are these practices any different for aromatic compounds such as a benzene and toluene versus a corrosive liquid such as sulfuric acid? c) Is acrolein or epichlorohydrin treated differently from other liquids? d) How are corrosive liquids contained? e) Are all liquids handled the same relative to spill prevention and secondary containment?

In general, spill prevention practices are no different from those found in the literature and in general use. Where special concerns arise, such practices may be modified. Specific practices depend upon the properties of the material in question. Even here, practice may vary from location to location for a host of site-specific reasons. Be that as it may, the ultimate goal is to protect employees and citizens, the environment, and property.

5. Along the lines of spill prevention, containment, cleanup and disposal, what practices are utilized for solids?

See Question 4.

6. How is chlorine or other gases handled relative to BMP's for prevention and containment of spills?

See Question 4.

7. Do you conduct inspection programs for evaluating condition of storage tanks? How frequent are these inspections and are they visual, structural testing or both?

Yes. Frequency differs depending on materials of construction, the service(s) of the tank, location of the facility, etc. Structural, visual, and instrumental testing may be employed, depending on need.

8. Are spill prevention and containment measures any different depending on the potential source of the hazardous chemical spill, such as: material storage area, loading and unloading areas, inplant transfers and handling runoff from plant site, and sludge or hazardous material disposal sites? What are the practices used for these potential sources of hazardous material spills?

Yes. Practices are highly site-specific and dependent upon the material in question.

9. How would you dispose of a hazardous material if contained in a dike or sump? Would the chemicals be for example: reclaimed, drained to the process wastewater for treatment, disposed of in landfill? Would these procedures be any different for acrolein, allyl alcohol, allyl chloride, epichlorohydrin, vinyl chloride, or isophene?

Any of these options is possible, depending upon the specific material and circumstance of a spill.

10. What practices are used to control hazardous chemicals from entering the plant runoff?

In general, the practical approaches described in literature are effective. See Question 4.

11. Can you supply us with <u>any</u> cost information relative to developing and implementing (e.g., by area, by chemical, by plant) a BMP plan at your plant? Can you provide us with a project timing schedule to implement a BMP plan?

To reiterate our response to Question 2, Shell believes proper BMP requirements are already met, as we perceive Congressional intent relating to and establishing this approach. Even should EPA expand upon that intent, it is impossible to provide any meaningful information on costs or timing at this stage of BMP development.

12. Could you send us any technical bulletins or other information on the specific hazardous chemicals you buy, use or make (such as acrolein, allyl alcohol, allyl chloride, epichlorohydrin, vinyl chloride, xylene, toluene, and isoprene)?

Yes, they are attached for the materials you listed. Please note that these items are intended primarily for customer safety information and that spill and leak information emphasizes avoiding the contamination of public drinking water supplies.

13. Would you like to be put on our mailing list for a copy of the final report?

Yes.

UNION CARBIDE CORPORATION
CHEMICALS AND PLASTICS
P.O BOX 8361, SOUTH CHARLESTON, W VA. 25303

February 14, 1979

(QUESTIONNAIRE RESPONSE—REF 3)

Mr. Charles P. Ryan, P.E.
Hydroscience, Inc.
363 Old Hook Road
Westwood, NJ 07675

Dear Mr. Ryan:

Your Valentine is enclosed!

Except for questions you may have and our inability to generate cost data, the enclosed documents are provided in answer to your inquiry on Best Management Practices and Spill Prevention, Control and Countermeasure Plans for Toxic and Hazardous Materials.

Question 1 - Attached are the following:
- a) Chemical Safety Data Sheet SD-80, Chlorine
- b) Chemical Safety Data Sheet SD-95, Phosgene
- c) Phosgene/Chlorine Leaks or Spills Control in Areas of Loading, Unloading, Storage Transfer and Processing Units
- d) Chlorine Transfer, Containment and Emergency Procedures

Question 2 - Attached are the following:
- a) Clarification of PCB Storage
- b) Carbaryl SEVIN Packaging Practices and Procedures
- c) Precautions and Housekeeping Practices, SEVIN

Question 3 - Attached are the following:
- a) Clarification of drainage of field storage tanks
- b) Field Storage Tanks

Questions 3,4,5 - Attached are the following:
- a) Poisons, toxics, corrosives, flammable and volatile liquids.

Concerning cost data, we can provide you with a cost estimate for simply developing the document similar to the Oil SPCC Plan at each of our locations. We need some guidelines to develop costs for capital expenditures to meet BMP or SPCC requirements.

The invitation remains open for you to visit our Kanawha Valley and Texas Plants. We think it is important to you to compare facilities where conditions of plant age, unlimited space as compared to confined areas, product mix, etc., before BMP and SPCC guidelines are written.

Please inform me if I can be of further assistance.

Very truly yours,

M. E. Hall

M. E. Hall

MEH/klw
Attachments

BMP (SPCC) QUESTIONS

1. How is phosgene (or other hazardous gases) handled relative to BMP's (SPCC's) for prevention and containment of spills? In all areas (loading/unloading, storage, transfer points, process) what practices are utilized to prevent a leak? What is done if a leak does occur?

2. For solids (such as carbaryl, 7) in all areas (loading/unloading, storage, transfer points, process) what spill prevention and containment practices do you use? You mentioned a simple dry operation - sweep up and recovery. Anything else?

   You mentioned a waste stockpile of PCB's. If this is outside, how do you prevent the material from reaching the surface waters? i.e, problems with runoff, windblowing? Is material covered? drummed?

3. For flammables and highly volatile liquids, what is done regarding spill prevention and containment in the various areas of the plant? Are they treated like any other liquid? Are special storage tanks utilized? If a spill occurs you mentioned draining as soon as possible. Anything else? like foams?

4. For corrosives (hydrochloric, propronic, formic acids) you mentioned isolated diked areas in tank storage areas. In the tank farm and other areas of the plant, what else is done regarding spill prevention and control? Are corrosives treated like any other liquid?

5. For human poisons (we mentioned dichlorobenzene) what spill prevention and containment practices are utilized in the various areas of the plant? Are they treated like any other material or are special measures taken?

PHOSGENE AND CHLORINE LEAKS OR SPILLS CONTROL IN AREAS OF LOADING/UNLOADING, STORAGE, TRANSFERS AND PROCESSING UNITS

Leaks, spills or emissions of small amounts of phosgene or chlorine into surrounding areas of the above-mentioned locations are controlled by water curtain. Other means of controlling leaks are as summarized below:

A. Evacuation System - Designed to clean up by evacuation of chlorine or phosgene equipment before removing out of service for maintenance works. Evacuation headers are located in all storage areas and processing units and they discharge into a caustic vent scrubber.

B. Caustic Vent Scrubbers - Caustic solution is used to react chlorine or phosgene in all blowoff streams and evacuation header discharges. All safety valves discharge into the vent scrubbing systems. Vent scrubbers are located in storage areas and the processing unit.

1. Chlorine Storage Area - There are two vent scrubbers, the old and the new sniff towers. They are used interchangeably, while one is in service the other will be on standby. The old sniff tower is capable of handling 300 pounds per hour of chlorine vapors while the new tower can handle 1,100 pounds per hour of chlorine vapors.

2. The Field Storage Vent Scrubber - Single vent scrubber, capable of handling 1,720 pounds per hour of toxic vapors. The vent scrubber is tie-in to the unit vent scrubbers and can transfer feed to the unit vent scrubbers.

3. The Unit Vent Scrubbers - There are two vent scrubbers at the processing unit. The normal vent scrubber which is constantly used is capable of treating 6,000 pounds per hour of toxic vapors. The second vent scrubber which is normally on standby condition has the capacity larger than the maximum discharge capacity of any single safety valve in the concerned unit. It can handle a maximum toxic vapor load of 46,000 pounds per hour.

Besides the above leak control means, strict safety design considerations were taken into account when designing systems to prevent massive releases of the toxic vapors such design consideration can be outlined as follows:

C. Phosgene Converter System - The following safety provisions in the phosgene converter system are aimed primarily at the prevention of a major phosgene or chlorine leak:

1. All equipment is designed under the lethal service provision of the ASME Code.

2. All chlorine and phosgene piping is for 300 psig.

3. All safety valves that discharge vapor into the existing vent header have:

   a) A rupture disc under the safety valve.

   b) A pressure alarm to indicate a rupture disc leak.

   c) A bellows to allow for the maximum expected vent header back pressure of 40 psig.

4. All safety valves that discharge liquid into the vent header are set sufficiently below the maximum allowable working pressure of the protected equipment to allow for the 40-psig maximum back pressure.

5. The chlorine vaporizers are equipped for two hazardous conditions:

   a) The steam supply will be automatically shut off if the chlorine pressure in the vaporizer becomes too high.

   b) Two independent alarms will sound and the chlorine supply motor valve will close if the chlorine liquid level in the vaporizers becomes too high.

6. The chlorine and carbon monoxide feeds to the phosgene reactors will be automatically shut off under any of these emergency conditions:

   a) High Reactor Inlet Temperature - High temperature at this point, after mixing the chlorine and carbon monoxide feeds, would be an indication of methane or hydrogen contamination in the carbon monoxide feed.

   b) Low Carbon Monoxide Feed Pressure - Chlorine feed would continue to the reactor and might contaminate the phosgene.

C. 6. contd.

c) Low Reactor Shell Liquid Level - This condition would reduce the heat removal capability and might result in a tube failure. Two independent liquid-level systems are provided for extra protection against this hazard.

d) High Condenser Outlet Gas Temperature - High-temperature vapor from any of the phosgene condensers would indicate loss of river water or brine cooling.

7. Automatic Brine Dump - Brine will be automatically dumped from the phosgene condensers if conditions exist for a brine leak into the phosgene. Normally the phosgene side pressure is higher than the pressure on the brine side. If this pressure differential becomes too low, motor valves in the brine supply and return headers will automatically close and the brine in the condensers will be automatically dumped to the sewer. With no brine cooling, a high condenser outlet gas temperature will result, and the chlorine and carbon monoxide feeds to the reactors will be automatically shut off.

D. Phosgene Storage System - The phosgene storage system has been designed with three major safety considerations in mind:

1. That a massive release of phosgene should not occur from mechanical damage or instrument failure.

2. That the stored phosgene should not become contaminated with anything that might lead to a phosgene release.

3. That the tanks can be safely emptied and cleaned.

E. Protection Against Massive Release - The phosgene tanks have the following mechanical and instrumentation features to protect against a large phosgene release:

1. Underground, double-wall tanks were selected as the safest method for providing new phosgene storage.

2. Three tanks are provided and one will always be empty as an emergency spare.

3. The inner tank shell is designed for 250 psig versus the normal 60 psig or less operating pressure to provide a large margin of safety against overpressure.

4. The jacket is designed for 100 psig to contain the phosgene in case of a failure of the inner tank.

5. All connections to the inner shell are 1-1/2 inches minimum size, are of extra heavy construction, and are located on one 26-inch diameter manhead in the top of the tank to avoid having nozzles spread throughout the surface on the tank.

E. contd.

6. A top quality shutoff valve is provided on each tank nozzle to reduce the frequency of evacuating and purging these large tanks for the simple replacement of a leaking valve.

7. A retaining yoke is installed around the phosgene tanks to ensure that an empty tank will not be lifted out of the ground by underground water.

8. The tanks are protected against corrosion by a waterproof coating and by cathodic protection.

9. The inlet and outlet phosgene lines to the tanks have:

   a) Automatic shutoff valves that close if a line ruptures.

   b) Remote control, on/off valves located as near to the tank nozzles as practical that can be closed from the control room to isolate the phosgene tanks in the event of a known pipeline rupture.

10. All phosgene pumps have a high-low ampere alarm to indicate conditions that require the pump to be manually shut down.

11. High temperature, high pressure, and two independent high liquid-level alarms are provided for the inner tank.

12. A high-pressure alarm for the outer shell indicates a probable phosgene leak in the inner shell.

F. Protection Against Contamination - The most hazardous phosgene contaminants present in the phosgene production and storage systems are water, caustic, and calcium chloride brine (30%). The reaction of phosgene with these contaminants is exothermic and if uncontrolled, could create conditions leading to a major release of phosgene. The following features have been provided to minimize the possibility of contaminating the stored phosgene, and to minimize the effects of contamination should it occur.

1. The phosgene cooling system is designed to prevent stored phosgene from becoming contaminated with the coolants. Phosgene is cooled with chloroform in an external heat exchanger with the pressure higher on the phosgene side. The chloroform is cooled with brine in a second heat exchanger with the pressure higher on the brine side to prevent contaminating the brine. A phosgene or brine leak into the chloroform will build up in the chloroform surge tank where a high-level alarm has been provided. Phosgene contaminated with chloroform could be used in the TDI and methyl isocyanate processes with no hazardous results.

F. contd.

2. A trap tank is installed in the vent collection header upstream of the vent scrubber to avoid the possibility of caustic contaminating the stored phosgene. This trap tank will normally operate empty, and any level increase in the tank, which is measured by two completely independent liquid-level devices, will indicate the following abnormal conditions:

   a) Caustic blowback from the vent scrubber.

   b) A leaking tube in the phosgene cooler or the chloroform cooler which would overflow from the chloroform tank into the trap tank.

   c) Overfilling the phosgene tank which would overflow into the vent header.

3. The vent header, both upstream and downstream of the trap tank has check valves installed as added protection against backflow from the vent scrubber into the phosgene tanks.

4. The cooling system is designed to keep phosgene at a maximum temperature of 0°C where the reaction from caustic or water contamination is very slow.

5. The safety valves on the phosgene storage tanks are sized to release the gases that would evolve from the reaction of phosgene with caustic or water at 8°C.

6. A separate caustic vent scrubber is installed in the storage tank area to treat all normal and emergency vents prior to discharge to the existing flare tower. The existing caustic scrubber in the SEVIN area would have been a potential source of contamination from the many processes that discharge into it. Also, the SEVIN vent scrubber is about 600 to 700-feet away, too far for dependable service.

G. Cleaning and Evacuation Provisions - The phosgene tanks are designed and installed with features to facilitate cleaning:

1. The tanks slope toward the end where the manhead is located and where the outlet pipe takes suction.

2. The internal stiffening rings are perforated for liquid to drain to the low end of the tank on both the inner tank and in the shell side.

3. The phosgene transfer pump takes suction from a sump and no more than five gallons should be left in the tank after pump-out.

4. The inner tank is designed for an external pressure of 25 psig to permit the residual phosgene to be evacuated by pulling vacuum in the inner tank while low-pressure steam is placed on the shell side.

H. Control of Chlorine Leaks or Spills - Chlorine gas is only slightly soluble in water; therefore, turning a stream of water on a leaking container or fitting will only aggravate the situation by supplying heat to the liquid chlorine confined in the container, causing it to evaporate faster and thus increasing the gas flow. Furthermore, water increased the corrosive action of chlorine and may make the leak worse. Shutting off the source of chlorine or plugging the hole, if possible, is the most effective action to be taken.

The evolution of gas from unconfined liquid chlorine, such as when spilled on the ground or in open vessels, can be reduced by spraying with cool water as at the low temperature of unconfined (freely evaporating) liquid chlorine it forms crystals of chlorine hydrate with water. These crystals contain about 33-percent chlorine by weight, and although they are formed at temperatures up to 49.3°F (9.6°C), they evolve chlorine gas readily even at 32°F (0°C), and are of negligible advantage in warm weather.

A more effective method of controlling the rate of evaporation of chlorine from a liquid spill is to use fire-fighting foam which acts as an insulating layer over the surface of the liquid chlorine. Suitable compounds are Kerr's Proform Angus' Micerol, or Pyrene Standard Protein Compound. Other types of foam such as chemical foam, high expansion foam, or mechanical foam from all-purpose or alcohol-resistant foam compounds must NOT be used as they are not stable.

This procedure utilized a six-inch layer of foam applied indirectly to the surface of the chlorine spill to reduce the rate of evaporation to about 1/4 the normal rate. A crust of ice (and chlorine hydrate) forms under the foam which is protecting a chlorine spill may provide some time to achieve other emergency activities such as evacuation of personnel, preparation for permanent removal or destruction of the chlorine, etc.

Destruction of chlorine from a liquid spill may be accomplished by spraying with a solution of caustic soda or soda ash if available. This type of treatment requires at least 1-1/4 pound of caustic soda or 3 pounds of soda ash per pound of chlorine. For example, to absorb 100 pounds of chlorine, use:

1. 125 pounds solid or flake caustic soda dissolved in 40 gallons water to form about 42 gallons (oil barrel) of 27.5 percent solution; or,

2. 300 pounds soda ash dissolved in about 100 gallons of water to form about 105 gallons (2-1/2 oil barrels) of a 26.5 percent solution.

J. contd.

3. Phosgene Leak Detector - Air sampling detectors in the range of 0 X _ 0.1 ppm have been installed in all three level structure of the processing unit. An alarm will sound to alert the operator in the control room if the air sample on any level contains more than 0.05 ppm phosgene concentration.

All personnel working to stop leaks or spills must have approved protective equipment underlined on section under safety of the unit operation procedure. There is no other procedure beside these mentioned above.

YAM/nh

Reference Sources

1. Phosgene System SOP (1978).

2. Chlorine System SOP (1978).

3. Safety Consideration Report (1970).

CHLORINE TRANSFER, CONTAINMENT, AND EMERGENCY PROCEDURES

Chlorine

A. Unloading and Transfer of Liquid Chlorine

1. Leak containment - new installations

   a. Piping is fabricated and installed per chlorine Institute and UCC approved specifications.

   b. All piping and equipment is degreased and cleaned before installation.

   c. Piping is hydrostatically tested to 550 psig.

   d. All piping and equipment is dried with N_2 to a dew point of -40°C. Care is taken to eliminate water at low points.

   e. Vapor Cl_2 is first introduced and all flanges and fittings tested for leaks with a 25% ammonium hydroxide solution.

   f. All hoses are tested at 500 psig and tagged with test date and pressure.

2. Leak containment - normal operations

   a. Connections to tank cars and barges are leak tested under N_2 pressure, then under vapor Cl_2 pressure with 25% ammonium hydroxide before liquid Cl_2 is introduced.

   b. Max line pressure is controlled at 75% of design working pressure.

   c. Cl_2 from hoses and necessary lines is evacuated to a caustic scrubber before hoses are disconnected.

   d. Hoses are hydrostatically tested to 500 psig at least yearly.

B. Chlorine Releases

1. Depending on size of leak, appropriate emergency response taken is (a) local gas alarm, (b) plant-wide gas alarm, and c) activation of KVIEPC*. All include emergency response to varying degrees, including fire squads, rescue squads, evacuation procedures, and communication.

2. Leaking lines or equipment are immediately evacuated to a caustic scrubbing system. Small leaks may be temporarily clamped pending evacuation and maintenance.

3. Liquid spillage may be covered by a water fog. Water is prevented from reaching the leak itself.

Chlorine is extremely toxic to most forms of life and leaks or spills present severe air and water pollution hazards. Concentrations of 0.1 percent in the air may be lethal if inhaled (2) and concentrations of 1 ppm in water may be toxic to aquatic life (16). Because of its bactericidal properties, chlorine cannot be disposed of in biological waste treatment facilities and because it is nonflammable, it cannot be disposed of by incineration.

Chlorine is effectively disposed of by absorption and neutralization with alkalies or alkaline solutions.

I. Other Ways of Preventing Chlorine Leaks or Spills

1. These are remote shutoff valves at all necessary locations in all chlorine transfer lines with controls for closing valves located in personnel shelters to immediately shut off loading storage tanks or feeding from tank to processing units in case of hose or line rupture.

2. Four tanks are provided with one low-pressure tank as an emergency spare.

3. Also the Institute Plant is a member of the Tri-State Pollution Prevention and Cleanup Committee. Resources are available to contain and clean up any major spills by calling 304-344-3609.

J. Leak Detection

There are two ways of detecting chlorine and phosgene leaks in the unit.

1. The Use of 10-Percent Ammonium Hydroxide Solution - Leaks higher than an elusive type or highly nonvisible type leak can easily be found by spraying a 10-percent ammonium hydroxide solution in the area where the leak is detected. Phosgene reacts rapidly with ammonia to form a dense blue-white cloud.

   CAUTION: Use coverall goggles to avoid severe eye burns caused by ammonia. Approach leak cautiously to avoid exposure. Also, do not use ammonia straight from lab plastic bottle since the concentration is higher than 10 percent. Dilute it with water in 5-1 ratio of water to ammonium hydroxide solution. It may be difficult to find leak by applying ammonia when it is raining.

2. Use of Drager Tubes - An elusive type leak or testing equipment which has been on evacuation, use a Drager instrument. Carefully blow down through a drain valve at several points and use the Drager detector tube. By drawing gas through the tube with five squeezes of the bulb, the tube will indicate the ppm of phosgene present.

   CAUTION: Be sure to exhaust the detector bulb several times before taking it inside the control room. It may contain phosgene.

4. Breathing air equipment is provided for operating and emergency personnel. Escape-type respirators are also stored in appropriate locations.

---

* 1. KVIEPC - Kanawha Valley Industrial Emergency Procedures Committee - An emergency alert system which activates valley police and fire departments, ambulance, emergency, and hospital service.

JJH

PCB STORAGE

The Environmental Protection Agency proposed in the February 7, 1978, Federal Register, regulation for "Polychlorinated Biphenyls (PCBs) Disposal and Marking". The section from these regulations on storage follows:

ANNEX III

§ 761.42 Storage for disposal.

(a) Any PCB article or PCB container stored for disposal before January 1, 1983, shall be removed from storage and disposed of as required by this Part before January 1, 1984. Any PCB article or PCB container stored for disposal after January 1, 1983, shall be removed from storage and disposed of as required by this Part within one year from the date when it was first placed into storage.

(b) Except as provided in paragraph (c) of this section, after July 1, 1978, owners or operators of any facilities used for the storage of PCB's designated for disposal shall comply with the following requirements:

(1) Such facilities shall have:

(i) An adequate roof and walls to prevent rain water from reaching the stored PCBs.

(ii) An adequate floor which has continuous curbing with a minimum six inch high curb. Such floor and curbing must provide a containment volume equal to at least two times the internal volume of the largest PCB article or PCB container stored therein or 25 percent of the total internal volume of all PCB equipment or containers stored therein, whichever is greater.

(iii) No drain valves, floor drains, expansion joints, sewer lines, or other openings that would permit liquids to flow from the curbed area.

(iv) Floors and curbing constructed of continuous smooth and impervious materials such as Portland cement concrete or steel to prevent or minimize penetration of PCB chemical substances or mixtures.

(v) No storage facility shall be located at a site which is below the 100-year flood water elevation.

(c)(1) Non-leaking PCB articles and equipment may be stored temporarily in an area that does not comply with the requirements of paragraph (b) for up to thirty days from the date of removal from service.

(2) Storage of non-leaking and structurally undamaged PCB large high voltage capacitors on pallets next to a storage facility meeting the requirements of paragraph (b) shall be permitted until January 1, 1983. Such storage will be permitted only when the storage facility meeting the requirements of paragraph (b) has immediately available unfilled storage space equal to 10 percent of the volume of capacitors stored outside the facility. These capacitors shall be checked for leaks weekly.

(3) Any storage area subject to the requirements of paragraph (b) or subparagraph (1) of this section shall be marked as required in Subpart C—section 761.20(a)(6).

(4) No item of movable equipment used for handling PCBs in the storage facilities and which actually comes in contact with PCB chemical substances or PCB mixtures shall be removed from the storage facility area unless it has been decontaminated as specified in annex IV.

(5) All PCB containers and articles in storage shall be checked for leaks at least once every 30 days. All such leaking containers and articles and their contents shall be transferred immediately to properly marked non-leaking containers. Any spilled or leaked materials shall be immediately cleaned up using sorbents or other adequate means, and the cleaned materials and residues shall be disposed of in accordance with Subpart B—section 761.10(b).

(6) Any PCB container used for the storage of liquid PCB chemical substances or liquid PCB mixtures shall comply with the specifications of the Department of Transportation (DOT), 40 CFR 173.346, revised December 31, 1978. For 55 gallon drums, an 18 gauge steel or heavier and 2-bung head shall be used. For 5 gallon drums, 24 gauge steel or heavier shall be used. They must also meet DOT Specification 17E. Any PCB container used for the storage of non-liquid PCB mixtures, PCB articles, or PCB equipment shall meet the requirements of the DOT Specifications 5, 5B, or 17C with a removable head.

(7) PCB articles and PCB containers shall be dated when they are placed in storage under paragraph (b) or subparagraphs (c)(1) or (c)(2). The storage shall be managed so that the PCB articles and PCB containers can be located by the date they entered storage.

(8) Owners or operators of storage facilities shall establish and maintain records as provided in Annex VI.

UCC plants are in compliance with this requirement.

CARBARYL SEVIN PACKAGING PRACTICES AND PROCEDURES

ENGINEERING CONTROLS

A. Dust Collection and Control

1. Permanent hooding and air removal capability is provided in areas in which dust level in the air might be expected to otherwise exceed TLV during normal operations. These areas include:

   a. Bag Packer
   b. Primary Conveyor Transfer Points
   c. Bag Flattener

   Systems are engineered to reduce dust level well below TLV during normal operation.

2. Additional dust collection facilities are provided at locations at which dust generation during other-than-normal operations might exceed TLV. These include:

   a. Transfer System Rotary Valve Cleanout Ports
   b. Bag Packer Surge Bin Access Port
   c. Packer Cleanout Ports
   d. Broken Bag Hopper

3. Permanent catch pans are provided under elevated conveyors to prevent dust emitted from broken or sifting bags from spreading over an extended area.

4. The dust collection system is interlocked with other systems to prevent transfer of material to the packaging area when the collection system is not in service.

5. Air removed is filtered in a reverse-jet type bag collector before being discharged to the atmosphere. No air is recycled. Dust collection system capability is 5000 cfm.

6. Breathing air outlets are provided in all critical areas for use in case of gross equipment malfunction.

7. Respirators are provided and their use required when dust level is obviously high. Such situations might occur in case of broken bags, spill cleanup, and equipment cleaning.

8. All equipment is designed and maintained dust tight.

9. The packaging area is classified as Class II, Group G, Division 1, and the remainder of the building as Class II, Group G, Division 2. All electrical equipment meets the appropriate NEMA designation for these classifications.

10. All equipment and building structural steel are grounded to eliminate potential accumulation of static electricity.

B. Environmental Temperatures and Humidity

1. Bag packaging area is supplied with cooled, conditioned air. System capacity = 5 tons. Packaging area volume = 7000 $ft.^3$

2. Cooling and ventilation in the bag palletizing and storage areas is provided by makeup and exhaust blowers.

   Building area = 7800 $ft.^2$
   Blower volume = 20000 cfm
   Natural convection roof ventilators = 13 - 18" diameter

3. Heating is supplied by a packaged forced air, steam heating unit.

HOUSEKEEPING PROCEDURES

1. Janitors are provided on each shift. Duties include:

   a. General housekeeping in packaging and warehousing areas
   b. Cleanup of spills
   c. Recycle of broken bags
   d. Recycle of recoverable material collected in Activities a & b
   e. Cleaning of rest rooms and lunch facilities

2. A vacuum system with multiple pickups is provided for recovery of spills, material buildup on equipment and building structural steel, etc. This material is recycled to process.

3. Material not recoverable by vacuuming is removed in one of two ways:

   a. Material on floors is mopped up.
   b. The entire building interior is water-washed at regular intervals of approximately 3 months. Wash water is directed to a process sewer.

4. Waste packaging materials (i.e. pallets, cardboard, empty bags) are collected daily for disposal through normal plant procedures outlined elsewhere (landfill).

SANITATION

1. Clean outer clothing, including clean shirt and trousers, and new gloves and socks are provided each work day. Additional clean clothing is provided if required.

2. Disposable clothing is discarded via standard plant disposal procedures (landfill). Dirty shirts and trousers are stored in plastic bags for laundering.

3. Thirty minutes of shower time are provided at the end of each shift. Shower facilities are separate from but adjacent to the packaging facilities. Additional shower time is provided during working hours in case of above-normal exposure.

4. A lunch room is provided in a remote area of the packaging building. The lunch room is supplied with conditioned, outside air. Wash up is required prior to eating.

ENGINEERING CONTROLS

Housekeeping - Unit inspections are made monthly; Plant Management inspections at least once annually. Gross spills of Carbaryl are prevented from entering the process sewer by placing sand bags around the sewer openings. In addition, the process sewer flows to an interceptor decanter so that Carbaryl or other organic materials may be pumped back to the unit tanks for disposal. An automatic pump at this decanter operates on interface control. Spills of dried Carbaryl are recovered using a large vacuum unit to pick up the material and transfer it to a bin. In-process Carbaryl is shoveled up and placed in fiber-paks or open top dumpsters for disposal at a landfill. Slurry samples and other in-process samples are collected in fiber-paks and disposed of in the landfill. Samples of dry Carbaryl are collected in a fiber-pak and reclaimed with the vacuum apparatus. Slurry leaks onto process equipment and piping are removed with high-pressure water with the Carbaryl water slurry then entering the process sewer.

The process is controlled from a central control room. This room also contains lunch room facilities and toilets for the operating personnel. The control room is air conditioned for summertime comfort.

Carbaryl is transferred from one piece of process equipment to another in closed conduits. Transfer of dry Carbaryl is done pneumatically.

PERSONAL PROTECTIVE DEVICES

All operating and maintenance personnel working where Carbaryl is present are provided with a coverall program. Clean coveralls are provided daily for their use. The dirty coveralls are collected daily and laundered by a commercial cleaner. Lockers are provided for street clothes. The coverall program is optional; however, essentially all employees are participants.

Rubberized over garments are available for each employee should he or his supervisor deem them necessary, (generally used when a lot of water is present; for example, high-pressure water washing equipment). If an employee will be working in a dusty atmosphere (Carbaryl), a dust mask is issued for light dust. A full face mask (covering the eyes) that is connected to the plant breathing air header or a Scott Air-pak is required if the dust atmosphere is severe. Judgment of the severity of the atmosphere is the responsibility of the immediate supervisor.

All employees are issued gloves designed for chemical service. Replacement gloves are readily available at all times.

System	Initial Cost	Annual Cost(1)	Energy Cost(2)
Dust Collection	29,100	2,500	4,100
Packer Blower	1,500	100	500
Vacuum System	45,000	2,000	900
Makeup Air Heating	20,000	500	2,300
Air Conditioning	16,000	1,000	400

(1) Maintenance & Spare Parts
(2) Electrical Cost, except for Makeup Air Heating

PERSONAL PROTECTIVE EQUIPMENT COST

		Cost per Employee/Yr	Total/Yr
Gloves	$0.93/pr	$242	$2,662
Socks	$0.39/pr	101	1,115
Respirators	(not required to use)$0.15	10	110
Coveralls	$1.05 per change	257	2,830

PERSONAL HYGIENE

Thirty minutes for personal cleanup time is allowed at the end of each shift. At standard rates, cost would be $1,350/yr per man.

Employees share a shower/locker facility with others. Estimated cost based on the ratios of employees is $15,000.

JJH/err

Plant Safety Department Records

Personnel Training; Operational and Maintenance Control; Emergencies; Environmental Control

Appendix A: SEVIN Reaction Training Schedule
Appendix B: Training Information, Physical and Chemical Properties, Specifications, Toxicology, Safety for Formulators, Dust Explosions, Fire Safety, Waste Disposal
Appendix C: Training Information, Safety for Formulators
Appendix D: Training Information, Reactive and Hazardous Chemicals Manual Sheet
Appendix E: Training Information, Health Hazards
Appendix F: Training Information, Cholinesterase Inhibition
Appendix G: Master Card Tagging and Lockout Procedure
Appendix H: Rules Governing Entry into Vessels and Confined Spaces
Appendix I: Order for Waste Removal

Engineering Controls, Physical Stresses, Housekeeping, Sanitation, Personal Protective Devices, Safe Handling in Formulator's Plants. (Includes considerable duplication of training information).

Product Technical Bulletin: Facts on SEVIN Carbaryl Insecticide — No. F 43382, Dec. 1970

Product Technical Bulletin: SEVIN Carbaryl Insecticide — For Abundant Food and Fiber, No. 2-2353, 1974

PRECAUTIONS AND HOUSEKEEPING PRACTICES USED AT THE SEVIN UNIT (158 DEPARTMENT) DEALING WITH SEVIN AND SEVIN SLURRY SPILLS

SEVIN Slurry Spills

Spills of this nature generally occur when slurry pump seals fail or when a slurry line develops a leak. These types of leaks can be easily isolated or stopped.

Once the leak is stopped, laborers wearing coveralls, boots, gloves, and standard plant safety equipment shovel the spilled SEVIN slurry into properly marked trash pans. These pans are than emptied in accordance with UCC standards at the Goff-Mountain Landfill.

After the SEVIN slurry is removed, the pad is water-washed to further clean the effected area. Oil layers are skimmed and returned to the system. The water layer is discharged to the wastewater treatment unit.

Minor SEVIN Spills

At the Production Unit, SEVIN spills occur around the drying and transfer equipment. These spills can also be easily isolated and cleaned up. The SEVIN in these types of spills becomes contaminated with particles from the surrounding area and is unable to be reclaimed.

The SEVIN is cleaned up and disposed as noted above under "SEVIN Slurry Spills".

DAJ/nh

FIELD STORAGE TANKS - DIKE VALVE CONTROL

Dikes surround field storage tanks. Generally, the dikes were built to hold slightly in excess of the volume of the largest tank within that dike. At older plants, some of the dikes do not meet this criteria - the basic philosophy then was to contain the stormwater from a heavy rain and tank leakage (usually valves) or spills; it was not based on a catastrophic tank rupture.

Dike valves, usually positioned outside the dike, are kept in the closed position, and opened only to drain rainwater out of the diked area. At most of the plants, the water, if it is clean, is discharged to the receiving stream. If the water is contaminated, it is pumped out of the dike for recovery of the "goodies", or if the concentration is such (low) that recovery is infeasible then it is pumped to the process sewer for treatment at the wastewater treatment unit.

UNIT TANKS

The basic philosophy on unit tanks incorporates a balance between safety and the environment. A fire in a unit tank farm where a dike exists and the valves are closed would endanger the production unit(s) and other storage tanks, and probably would result in more damage to the environment than immediate discharge to the sewer - even to the cooling water sewer or directly to the receiving stream.

TANK CAR/TANK TRUCK LOADING/UNLOADING

Generally, drainage from tank car/tank truck loading/unloading facilities is directed to the process sewer through an underflow/overflow sewer arrangement.

Under normal conditions spills from the facility will discharge to the wastewater treatment plant; but, in the case of a rainstorm, the initial flow and thereafter a measured amount will discharge to the wastewater treatment plant but the excess flow is discharged to the receiving stream. This is necessary in order not to overload, hydraulically, the wastewater treatment plant.

MEH

BEST MANAGEMENT PRACTICES FOR CONTROL OF
HUMAN POISONS, TOXICS, CORROSIVES, AND FLAMMABLE AND VOLATILE LIQUIDS

In addition to standard controls already discussed, design criteria, equipment, and procedures for the manufacturing, processing, storing, handling, and distributing are developed for each type of chemical listed in the heading.

MEH

E. I. DU PONT DE NEMOURS & COMPANY
INCORPORATED
WILMINGTON, DELAWARE 19898

ENGINEERING DEPARTMENT
LOUVIERS BUILDING

(QUESTIONNAIRE RESPONSE—REF 1)

APR 2 - 1979
HYDROSCIENCE INC.

March 30, 1979

Mr. George J. Kehrberger
Hydroscience, Inc.
363 Old Hook Road
Westwood, NJ 07675

Dear George:

In connection with a best management practices (BMP) study Hydroscience is doing for EPA, you asked us to supply information in response to certain questions about eight chemicals Du Pont produces: aluminum sulfate, ammonium chloride, dimethylamine,. formaldehyde, methoxychlor, methyl methacrylate, phosgene, and vinyl acetate.

Since Du Pont produces or uses one or more of the eight chemicals at more than one site, I have tried to respond in a comprehensive manner rather than in detail. The degree of control required for a particular chemical will vary depending on its physical, chemical, and biological properties.

Attached is our response. I have taken up each question in turn and referred to particular chemicals as appropriate.

I have included several pieces of Du Pont literature on some of the compounds of interest. I shall try to locate others and forward to you.

If you have any questions, please do not hesitate to let me know.

Very truly yours,

ENGINEERING SERVICE DIVISION

L. L. Falk

L. L. Falk

LLF:rbw
Atch

HYDROSCIENCE BMP STUDY QUESTIONNAIRE

QUESTION 1.

Are spill prevention and containment measures any different depending on the ancillary source where a hazardous chemical spill or loss could occur (such as: material storage area, loading and unloading areas, inplant transfers and handling, runoff from plant site, and sludge or hazardous material disposal sites)? What are the common practices used for these ancillary sources?

RESPONSE

Spill prevention and containment measures may, and often do, differ depending on the source. For example, in storage areas procedures emphasize containment by diking. At loading, unloading and other auxiliary sources, emphasis is greater on collection (as well as containment) with subsequent disposal or diversion to waste treatment or disposal areas.

An illustration is vinyl acetate, delivered to one of our plants in railroad cars. The car unloading area has collection trenches leading to a sump. Small spills collect in the sump. The vinyl acetate storage tank is within earthen dikes for containing a spill. Operating procedures require that the dike drain valve be closed unless rainwater is being drained. Runoff from either facility is further controlled by other dams within the plant drainage system.

Sometimes only relatively small quantities of a hazardous substance may be involved in storage and use. Formaldehyde usage in some plants is small enough so that it can be received in "drum" quantities. Drums are stored in a "secure" area. The formaldehyde may either be pumped to the area of use or taken there in the drum itself where metered quantities are withdrawn. The use area is designed to contain inadvertent spills or releases until appropriate disposal can be made.

Where larger quantities of such chemicals as formaldehyde, dimethylamine, and methyl methacrylates are involved, practices for auxiliary sources may include the following:

a. Prepare written instructions and procedures on how to respond properly to spills;

b. Equip storage tanks with high level alarms and automatic shut-offs to prevent overfilling;

c. Check and inspect level gages and shut-off devices on a schedule.

d. For methacrylates, to be more precise, provide emergency shut-off for all transfer loading and unloading pumps at a main control station. This control shuts off power to <u>all</u> pumps in the event of line leaks, ruptures, etc.;

e. Avoid unnecessary traffic past unloading and loading locations through use of barricades during transfer processes;

f. Provide pans beneath pump seals, hose connections, sample ports, etc., to collect liquids;

g. Direct liquid spills in truck unloading stations by diversion structures to collection or containment areas;

h. If deemed necessary, use an inflation balloon in conduits to natural drainage ditch to capture spills;

i. Inspect unloading operations frequently during periods of unloading if not manned continuously;

j. When routine inspections during operations are reduced, as on holidays, inspection patrols specifically include plant storage areas;

k. When possible, tie diversion systems directly into the waste treatment plant or a wastewater diversion system for gradual release or treatment;

l. Design training procedures to emphasize prevention and cleanup of even the very small spills; restrict loading and unloading operations to trained personnel;

m. Make available equipment (trucks, pumps, etc.) to remove liquid wastes, spills, etc. from containments, etc. at all times;

n. Keep materials at hand in storage areas for containment (drums) and cleanup (adsorbents);

o. Only release liquids in diked areas after checkout of liquids and rainwater for contamination, etc.;

p. Make formal written spill reporting procedures a part of normal operating practice; emphasize corrective action in reports;

q. Design security measures to restrict access only by authorized and trained personnel;

r. Keep storage within fenced plant boundaries.

QUESTION 2.

How would you dispose of a hazardous material if contained in a dike or sump? Would the chemicals be for example: reclaimed, drained to the process wastewater for treatment, disposal or in landfill?

RESPONSE

Disposal of contained material depends on the quantity and properties. Contained material is not reclaimed if even minor contamination makes it unsuitable for use. Large quantities and concentrated material are often contracted for off-plant disposal or incinerated on-site, if possible. Smaller quantities of liquids may be drummed before loading onto trucks for ultimate disposal at approved liquid disposal sites.

If the plant has a biological treatment facility and the hazardous material is biodegradable, it would probably be treated there. Some plants have emergency retention basins to which such materials are diverted for subsequent treatment. The rate at which the material can be returned for treatment is governed by the loadings the treatment plant can handle within NPDES permit limitations.

QUESTION 3.

For liquids, what spill practices are utilized? Are these practices any different for compounds such as formaldehyde or dimethylamine versus a corrosive liquid. Is methylmethacrylate or vinyl acetate treated differently from other liquids? How are the corrosive liquids contained? Are all liquids normally handled the same relative to spill prevention and secondary containments?

RESPONSE

Practices for liquid spills vary depending on physical and chemical properties. For example, amines and formaldehyde spills would be diluted as necessary to stop air pollution. Acid spills are neutralized with a base such as caustic soda, soda ash, or lime. The neutralization may be specific to the spill or be accomplished in the plant's normal treatment system.

In processing areas, floor drains are often connected to collection sumps which route chemicals to the waste treatment plant. In the event of spillage, the material may be hosed with water into floor drains.

Some plants have a spill control approach based on providing primary and secondary containment. This means that individual areas or processes have internal (primary) spill containment in the form of dikes or curbed areas with sumps. Outside of an area, the overall site has spill containment facilities (secondary) such as retention ponds and in-place drainage control dams. Exceptions in primary retention might be, for example, for highly flammable liquids stored within a process area, where diversion trenches would move the liquid into a more remote location for containment.

QUESTION 4.

Along the lines of spill prevention, containment, cleanup and disposal, what practices are utilized for solids (eg, aluminum sulfate, methyoxychlor)?

RESPONSE

If a dry material can be recovered for reuse, such is done. If not, and depending on the quantity involved, it could be collected for contract disposal. For highly hazardous solids, dry cleanup rather than washdown of spills is more desirable.

QUESTION 5.

How is phosgene or other gases handled relative to prevention and containment of spills?

RESPONSE

The Manufacturing Chemists Association has prepared "Chemical Safety Data Sheet SD-95" on the handling and use of phosgene, recently revised in 1978. It contains a considerable amount of information which should be of use to Hydroscience.

QUESTION 6.

Do you conduct inspection programs for evaluating the condition of storage tanks? How frequent are these inspections and are they visual, structural testing or both?

RESPONSE

There is no set practice for inspection of storage tanks. In general, nonpressurized vessels are visually inspected externally for evidence of maintenance needs. Frequently operating personnel make daily observations as a means of inspection for leaks. Training and operating procedures require immediate reporting and prompt containment and/or cleanup of leaks or spills. In remote areas, such as tank farms, field check-sheets include a check for leaks.

Storage tank integrity is checked frequently by various means: visual checks after cleaning by entering, ultrasonic testing of wall thickness, x-ray checks of welds, visual evidence of corrosion, dye checking and hydrostatic tests. Safety and relief valves also may have testing schedules.

QUESTION 7.

What common practices are used to control hazardous chemicals from entering the plant runoff?

RESPONSE

Some of these practices have been discussed in response to question 1

Dikes, curbing and diversion to waste treatment facilities are the principal practices to prevent hazardous materials from entering plant runoff.

In the design of new equipment and installations, spill considerations often affect equipment selection, location, mode of operation, etc. Emphasis is on prevention, containment, or elimination of leaks which could eventually enter surface water drains, ditches, etc.

QUESTION 8.

Can you supply us with any cost information relative to developing and implementing (eg, by area, by chemical, by plant) a BMP plan at one of Du Pont's plants? Can you provide us with a project timing schedule to implement a BMP plan?

RESPONSE

Obviously, both the cost and timing for developing and implementing a BMP plan depend on the facilities involved. One of the problems in developing the cost for a BMP is that such practices are often normally required for the safe handling of hazardous materials on a plant site. Personnel safety, fire protection, assurance of proper wastewater treatment facility operation, etc., are all factors influencing plant operating practices which can also be considered BMP. Some of these operating practices would undoubtedly become part of a BMP. But other considerations would also have to be added.

The size of a manufacturing facility as well as the number of hazardous substances made or used and the number of ancillary facilities all influence the development and implementation costs.

QUESTION 9.

Could you send us any technical bulletins or other information on the specific hazardous chemicals presented in Table 2.

RESPONSE

In answer to question 5, we referred to the MCA's Chemical Safety Data Sheet SD-95 on handling and use of phosgene. The MCA has other such sheets dealing with some of the specified hazardous chemicals. These are:

SD-1	Formaldehyde
SD-57	Methylamines
SD-75	Vinyl Acetate
SD-79	Methyl and Ethyl Acrylate

In addition, the following items of Du Pont origin are attached herewith:

Data Sheet - Aluminum Sulfate
Quick Product Review - Aluminum Sulfate
Material Safety Data Sheet - Aluminum Chloride

Data Sheet - Aluminum Chloride
Quick Product Review - Formaldehyde
Formaldehyde Solutions - Properties, Uses, Storage and Handling

QUESTION 10.

Would you like to be put on our mailing list for a copy of the final report?

RESPONSE

Yes. Address to: L. L. Falk
Engineering Dept. - L-1339
E. I. du Pont de Nemours & Co.
Wilmington, DE 19898

Appendix E

ANALYTICAL MATHEMATICAL SOLUTION

A. BASIC MASS BALANCE DIFFERENTIAL EQUATION:

The basic differential equation describing the movement of a mass discharge of a substance (c) to a water body is given as:

$$\frac{\partial}{\partial t} c\ (x,y,z) = -\frac{\partial}{\partial x}(c\ U_x) - \frac{\partial}{\partial y}(c\ U_y) - \frac{\partial}{\partial z}(c\ U_z) \qquad \text{(E-1)}$$

$$+ [\frac{\partial}{\partial x}(E_x \frac{\partial c}{\partial x})] + [\frac{\partial}{\partial y}(E_y \frac{\partial c}{\partial y})] + [\frac{\partial}{\partial z}(E_z \frac{\partial c}{\partial z})]$$

$$-Kc \pm C_w$$

where:

U_x, U_y, U_z = the advective flow in the x,y,z coordinate directions

E_x, E_y, E_z = the three dimensional dispersion characteristics of the system

K = first order decay rate associated with substance c

C_w = external sources and sinks of material c

Two general classes of solution techniques for the Equation E-1 are available: analytical solutions providing continuous concentration profiles and finite difference methods yielding discrete concentration approximations for finite completely mixed volumes requiring numerical solutions by computer. In this particular study, only analytical solutions are presented.

B. ONE DIMENSIONAL, NON-INSTANTANEOUS SPILL APPROXIMATION

Equation E-1 can be solved analytically after making several basic assumptions. The resulting concentration at a distance x from a discharge and after a time t since the beginning of a release lasting a specific period of time is[37]:

$$c(x,t) = (M/2AN\sqrt{\pi E}) \cdot \sum_{L=1}^{N} \{\exp[-(x - ut')^2/4\ Et' - Kt']\}/\sqrt{t'} \qquad \text{(E-2)}$$

where:

$t' = t - (L - 1) - (\frac{D}{N})$ and is the time since the release of the Lth instantaneous release

D = duration of the continuous release
N = number of instantaneous releases into which the continuous release is divided

C. ESTIMATE OF LONGITUDINAL DISPERSION

Longitudinal dispersion with attenuates concentrations in natural streams depends upon such factors as flow, shear velocity, and channel characteristics. A literature review of recent longitudinal dispersion coefficient information indicates the relationship[155]:

$$D_L = \frac{\beta Q^2}{U_* R^3} \qquad \text{(E-3)}$$

has had the greatest degree of success in estimating applicable longitudinal dispersion coefficients. In the above formulation,

Q = stream flow

U_* = shear velocity = $\sqrt{gRs}$
where g = gravitational acceleration
and s = channel slope

R = hydraulic radius, or mean depth in large, wide rivers

and β = dimensionless coefficient

Typical values of β range from 0.001 to 0.1. To define a likely value for β, the relationship

$$\beta = 0.18\ (U_*/U)^{1\ 5}$$

where U = mean velocity has been suggested.

D. TWO AND THREE DIMENSIONAL ANALYTICAL SOLUTIONS

For two and three dimensional cases, Equation E-1 can be integrated to yield the following relationships:

$$c(x,y,t) = (M/4\pi t\sqrt{E_x E_y}) \cdot \exp\ [-(x-ut)^2/4\ E_x t) \cdot \exp\ [-(y-vt)^2/4\ E_y t] \cdot \exp\ (-Kt) \qquad \text{(E-4)}$$

$$c(x,y,z,t) = (M/8\pi t\sqrt{E_x E_y E_z \pi t}) \cdot \exp\ [-(x-ut)^2/4\ E_x t] \cdot \exp\ [-(y-vt)^2/4\ E_y t) \cdot \exp\ [-(z-wt)^2/4\ E_z t) \cdot \exp\ (-Kt)$$

where M is the total instantaneous mass of material released, c is the concentration of that material at time t at location x and y in a horizontal reference plane and z in the vertical, and K is the decay rate associated with the material. Advective transport is described by u,

the velocity in the x-direction, v, the velocity in the y-direction and w, the velocity in the z-direction; dispersive transport is given by E_x, E_y, and E_z, the dispersion coefficient in the x, y, and z directions respectively.

These equations are approximate and are based upon the assumptions of an instantaneous discharge of soluble material, no physical boundary constraints, and constant coefficients of dispersion, net velocity or flow, and geometry. Solutions are available for the two and three dimensional case which incorporates the effects of vertical and lateral boundaries, but are not included here.[152]

GLOSSARY

Advanced BMP: Those best management practices which include BMPs specific to groups of toxic and hazardous substances, and/or one or more ancillary sources.

Ancillary source: Those activities which are associated with or ancillary to the industrial manufacturing or treatment process and may contribute significant quantities of pollutants to navigable waters. The ancillary sources as defined in this report are material storage areas; loading and unloading areas; inplant transfer areas, process areas, and material handling areas; plant-site runoff; and sludge and hazardous disposal areas.

Baseline BMP: Those best management practices generally considered good practice, low in cost, and applicable to broad categories of industry and type of substances. Those BMPs that can be used independent of ancillary source and type of substance.

Best management practice (BMP): The most practical and effective measures, or combination of measures, which, when applied to an industrial activity, will prevent or minimize the potential for the release of toxic or hazardous pollutants in significant amounts to surface waters.

Containment: The physical structures or collection equipment used to confine a material after it is released from its primary location (or containment).

Hazardous substances: Those compounds designated as hazardous by 40 CFR 116 (Reference 20). (See Table 1.1)

Incident: Any spill that reaches the surface waters. (Please see definition of spill below.)

LC_{50} (lethal concentration): The concentration of material which is lethal to one-half of the test population of aquatic animals upon continuous exposure for 96 hours or less.

Mitigation: The cleanup or treatment practices or methods used to reduce the pollutant load associated with a spilled material.

Prevention: Those practices used to provide additional protection beyond the baseline BMPs for spill prevention and which involve closer control of plant operations to prevent release of chemicals from their primary containment.

Primary location (containment): The confinement of a material in areas such as storage, transfer operations, or disposal sites.

Spill: Any release of material from plant site runoff, spillage or leaks, sludge or water disposal, and drainage from material storage areas.

Toxic substances (priority pollutants): Those 129 compounds designated by the EPA in accordance with the National Resources Defense Council vs. Train Consent Decree (Reference 149). (See Table 1.2)

Ultimate disposition: The final handling and removal of a substance from the site of the release.

TECHNICAL REPORT DATA
(Please read Instructions on the reverse before completing)

1. REPORT NO. EPA-600/9-79-045	2.	3. RECIPIENT'S ACCESSION NO.
4. TITLE AND SUBTITLE NPDES Best Management Practices Guidance Document		5. REPORT DATE December 1979
		6. PERFORMING ORGANIZATION CODE
7. AUTHOR(S) J. G. Cleary, O. D. Ivins, G. J. Kehrberger, C. P. Ryan, C. W. Stuewe		8. PERFORMING ORGANIZATION REPORT NO.
9. PERFORMING ORGANIZATION NAME AND ADDRESS Hydroscience, Inc. 9041 Executive Park Drive Knoxville, Tenn. 37919		10. PROGRAM ELEMENT NO. 1BB610
		11. CONTRACT/GRANT NO. 68-03-2568
12. SPONSORING AGENCY NAME AND ADDRESS Industrial Environmental Research Lab. - Cinn, OH Office of Research and Development U.S. Environmental Protection Agency Cincinnati, OH 45268		13. TYPE OF REPORT AND PERIOD COVERED Task Final; 1/78 - 10/79
		14. SPONSORING AGENCY CODE EPA/600/12

15. SUPPLEMENTARY NOTES

16. ABSTRACT

This document has been developed based on a review of current practices used by industry to prevent release of toxic and hazardous substances to receiving waters from non-point sources. Including in the review were published articles and reports, technical bulletins on specific compounds, and discussions with industry through telephone contacts, routine questionaires, and site visits. The information available on current BMPs was evaluated and grouped into general categories of baseline and advanced concepts. BMPs were related to pollutant sources and physical and chemical properties of the compounds. A classification scheme was developed for the toxicant hazardous substances, based on important physical and chemical properties revelent to identification of applicable BMP alternatives. The method of identifying BMPs based on chemical and source is presented.

This document was developed for EPA to provide guidance to NPDES Permiting Authorities to evaluate best management practices as required under the 1977 Clean Water Act to control discharge of toxic and hazardous substances from industrial plant site run-off, spillage and leaks, sludge and waste disposal, and drainage from raw materials storage areas to receiving waters.

17. KEY WORDS AND DOCUMENT ANALYSIS

a. DESCRIPTORS	b. IDENTIFIERS/OPEN ENDED TERMS	c. COSATI Field/Group
Pollution Abatement Wastewater Control Fugitive Emissions	Ancillary Sources Pollution Abatement BMPs Spills SPCC Clan	68D

18. DISTRIBUTION STATEMENT Release to Public	19. SECURITY CLASS *(This Report)* Unclassified	21. NO. OF PAGES 177
	20. SECURITY CLASS *(This page)* Unclassified	22. PRICE

EPA Form 2220-1 (Rev. 4-77) PREVIOUS EDITION IS OBSOLETE

☆ U.S. GOVERNMENT PRINTING OFFICE 1980-657-146/5497