United States
Environmental Protection
Agency

Office of Air Quality
Planning and Standards
Research Triangle Park, NC 27711

EPA - 454/R-99-023
July 1999

Air

EPA

# Emissions Testing at Culp Aluminum Alloys

# CULP ALUMINUM ALLOYS
# Steele, Alabama

MRI

# Emissions Testing at Culp Aluminum Alloys

## Test Report

For U.S. Environmental Protection Agency
Office of Air Quality Planning and Standards
Emissions, Monitoring, and Analysis Division
Source Characterization Group
Research Triangle Park, NC 27711

Attn: Mr. Solomon O. Ricks

DOUC# 1786 4634

EPA Contract No. 68-D-98-027
Work Assignment No. 2-03
MRI Project No. 4951-03-04

May 21, 1999

U.S. Environmental Protection Agency
Region 5, Library (PL-12J)
77 West Jackson Boulevard, 12th Floor
Chicago, IL 60604-3590

Midwest Research Institute • 425 Volker Boulevard • Kansas City, Missouri 64110-2299

# Preface

This document was prepared by Midwest Research Institute (MRI) for the U.S. Environmental Protection Agency (EPA) under EPA Contract No. 68-D-98-027, Work Assignment No. 2-03. Mr. Solomon O. Ricks was the EPA Work Assignment Manager. In this test report, MRI presents a description of the source tested, the sampling and analytical results and procedures, quality assurance and quality control activities, reporting and data reduction activities, sample and data handling procedures, and schedule for the test project.

The test project was conducted in MRI's Applied Engineering Division under the leadership of Mr. James Surman, Work Assignment Leader. Mr. John Hosenfeld, Program Manager, provided oversight to technical and administrative aspects of this work assignment.

MIDWEST RESEARCH INSTITUTE

Paul Garner for

John Hosenfeld
Program Manager

Approved:

Thomas J. Grant

Thomas J. Grant, Ph.D., P.E.
Director
Applied Engineering

May 21, 1999

# Contents

Preface . . . . . iii
Tables . . . . . vii

Section 1. Introduction . . . . . 1
1.1 Background . . . . . 1
1.2 Project Summary . . . . . 1
1.3 Project Personnel . . . . . 2
1.4 Report Organization . . . . . 2

Section 2. Process Description and Test Locations . . . . . 1
2.1 Process and Control Equipment Description . . . . . 1
2.2 Emission Sampling Locations . . . . . 1
2.3 Process Data . . . . . 3

Section 3. Test Results . . . . . 1
3.1 Objectives and Test Matrix . . . . . 1
3.2 Test Schedule . . . . . 4
3.3 Field Test Changes and Problems . . . . . 6
3.4 Summary of Test Results . . . . . 8

Section 4. Sampling, Analytical, and Process Data Collection Procedures . . . . . 1
4.1 Sampling Procedures . . . . . 1
4.2 Analytical Procedures . . . . . 4
4.3 Process Data Collection . . . . . 4

Section 5. Quality Assurance (QA)/Quality Control (QC) Activities . . . . . 1
5.1 Equipment Calibration . . . . . 1
5.2 Emission Measurements Quality Objectives . . . . . 1
5.3 Data Audit . . . . . 2
5.4 Data Assessment . . . . . 2

**Appendices**

Sample Tracking Data
Sample Collection Data
Sample Collection Calibration Data
Semivolatile Analysis Narrative Report
Process Data

# Section 1. Introduction

## 1.1 Background

Section 112 of the Clean Air Act requires the U. S. Environmental Protection Agency (EPA) to list and regulate categories of all major and some area sources that emit one or more of the hazardous air pollutants (HAPs) listed in Section 112(b) of the Act. Secondary aluminum production facilities were listed under Section 112(c)6 as sources for control of dioxin and furan emissions. Due to the nature of the processes in the industry, EPA believes that secondary aluminum production facilities are also a large source of polycyclic organic matter (POM) and polyaromatic hydrocarbon (PAH) emissions and as such should be tested for these HAPs. The POM and PAH emissions data could then be used to include secondary aluminum production facilities on the list of sources that need control for POM and PAHs under Section 112(c)6 thus displacing some relatively minor sources of these HAPs that are currently included on the list.

## 1.2 Project Summary

The purpose of this test project was to obtain uncontrolled and controlled POM and PAH emissions data from a chip drying process and a side-well reverberatory furnace process at a secondary aluminum production facility to support a national emission standard for hazardous air pollutants.

Midwest Research Institute (MRI) obtained uncontrolled and controlled POM and PAH emissions data from the chip drying process and a side-well reverberatory furnace process at the Culp Aluminum Alloys facility in Steele, Alabama. Specifically, MRI (1) measured POM and PAH emissions simultaneously at the inlet and outlet of the lime-injected baghouse used to control emissions from the chip dryer, and (2) measured POM and PAH emissions simultaneously at the inlet and outlet of the lime-injected baghouse used to control emissions from a side-well reverberatory furnace.

The test matrix is summarized in Table 3-1 (Section 3, Test Results). The target POM and PAH compounds are listed in Table 3-2. Testing was done during normal process operation. One test, consisting of two runs, was conducted on the lime-injected baghouse for the chip dryer, and another test, also consisting of two runs, was conducted on the lime-injected baghouse for the side-well reverberatory furnace. Each series of two test runs was conducted with simultaneous sampling at inlet and outlet locations for all emission components being measured. Measured emission parameters were identical at inlet and

outlet locations and for both tests. All sample analysis for POM and PAHs were performed at MRI's laboratories in Kansas City, Missouri.

MRI used Methods 1, 2, 3B, 4 and 5 in 40 *CFR* 60, Appendix A, and Method 0010 in "Test Methods for Evaluating Solid Waste, Physical/Chemical (SW-846)" to measure emissions and collect samples. Method 8270C in SW-846 was used for analysis of samples for POM and PAHs. These methods include technical quality standards and criteria which were included in the quality control requirements for this project.

## 1.3 Project Personnel

The following individuals were responsible for the management and execution of this test project:

- Mr. Solomon O. Ricks, EPA Work Assignment Manager; Office of Air Quality Planning and Standards; Emissions, Monitoring, and Analysis Division; Source Characterization Group
  Phone (919) 541-5242

- Mr. Juan Santiago, EPA Test Coordinator, Office of Air Quality Planning and Standards, Emissions Standards Division

- Mr. Ken Kirby, Site Coordinator, Culp Aluminum Alloys

- Mr. James S. Surman, Jr., MRI Work Assignment Leader, Midwest Research Institute

## 1.4 Report Organization

Results of testing are presented in the following sections of this document. Section 2 provides process information. Section 3 provides test results and Section 4 provides a description of sampling, analytical and process data collection. Finally, Section 5 provides a summary of QA/QC results.

# Section 2.
# Process Description and Test Locations

## 2.1 Process and Control Equipment Description

The Culp Aluminum Alloys facility in Steele, Alabama, is a secondary aluminum production facility, primarily smelting recycled aluminum to produce aluminum alloys used in cast aluminum products. The facility accepts many different forms of scrap aluminum feedstock and operates a chip dryer to volatilize oils and lubricants from the scrap aluminum prior to the melting operation. The chip dryer emissions are captured by closed hoods and are ducted to a lime-injected baghouse. Side-well reverberatory furnaces are used to melt, flux, and alloy the aluminum scrap that has been processed in the chip dryer operation along with unprocessed, but furnace-ready aluminum scrap. The side-well reverberatory furnace tested was Furnace No. 1. Emissions are captured by a canopy hood located above the charging and fluxing side-well and ducted to a second lime-injected baghouse.

The lime-injected baghouse used to control chip dryer emissions operates at approximately 170°F with a slightly positive pressure. The inlet test location is in a circular and horizontal duct that is upstream of the fan at the inlet to the baghouse. The outlet test location is in a circular duct that exits the baghouse horizontally and bends to a vertical exhaust section.

The lime-injected baghouse used to control Furnace No. 1 emissions operates at approximately 100 to 200°F with a slightly negative pressure. The inlet test location is in a circular and horizontal duct that is upstream of the flame arrester and baghouse inlet manifold ducting. The outlet test location is a circular, vertical stack.

## 2.2 Emission Sampling Locations

Sampling was conducted for emissions from the chip dryer at the inlet and outlet of the baghouse used to control dryer emissions. Sampling was also conducted for emissions from the Furnace No. 1 at the inlet and outlet of the baghouse used to control furnace emissions. The following descriptions are relevant to the number of traverse points used at each location and the sampling time at each point. Information on duct dimensions, distance from the nearest flow disturbances, and traverse point locations is found in Appendix B.

The internal diameter of the ducts at all four sampling locations was found to be slightly irregular, i.e., 2 diameters at 90 degrees in each duct were not the same. Diameters were measured at each duct through both test ports. The average of the two measured diameters was used to calculate the cross sectional area at each location.

### 2.2.1 Chip Dryer Baghouse Inlet

Two 4-inch ports, 90° apart, were used on the horizontal, circular, steel duct for Method 0010 sampling and associated measurements. A total of 12 traverse points was used, six on each traverse across the 18-inch diameter. Each point was sampled for 15 minutes with the Method 0010 train.

### 2.2.2 Chip Dryer Baghouse Outlet

Two 4-inch ports, 90° apart on the vertical section of the circular, steel duct were used for Method 0010 sampling and associated measurements. A total of 24 points was used, twelve on each traverse across the approximately 23-inch diameter. Each point was sampled for 7½ minutes with the Method 0010 train.

### 2.2.3 Reverberatory Furnace No. 1 Baghouse Inlet

Two 4-inch ports, 90° apart on the horizontal, circular duct were used for Method 0010 sampling and associated measurements. A total of 12 points was used, six on each traverse across the approximately 37-inch diameter. Each point was sampled for 50 minutes with the Method 0010 train. After ten hours of sampling at all 12 points, sampling was conducted at a single point for the remainder of each run. A point was chosen where the velocity closely approximated the average gas velocity at the start of single-point sampling.

### 2.2.4 Reverberatory Furnace No. 1 Baghouse Outlet

Two 4-inch ports, 90° apart on the vertical, circular stack were used for Method 0010 sampling and associated measurements. A total of 24 points was used, twelve on each traverse across the 46-inch diameter. Each point was sampled for 25 minutes with the Method 0010 train. After 10 hours of sampling at all 24 points, sampling was conducted at a single point in the same manner as at the inlet location.

## 2.3 Process Data

Process parameter data were collected by facility, EPA, and MRI personnel. Process data for the chip dryer is summarized in Table 2-1, and for reverberatory Furnace No. 1 in Table 2-2.

## Table 2-1. Chip Dryer Operating Parameter Summary

| | | | | |
|---|---|---|---|---|
| **Run No. 1:** | **Started 2/9/99 10:15** | **Finished 2/9/99 13:45** | | |
| **Material Description** | | | | |
| | Mixed material containing aluminum chips and curl, oil-based cutting fluid, and oxidized iron. | | | |
| **Weights (lb)** | | | | |
| **Before Drying** | | | | |
| | Gross Weight | | 13,454 | |
| **After Drying** | | | | |
| | Clean Dry Weight | | | 8,429 |
| | Recovered Iron | | | 1,460 |
| | Recovered Fines | | | 1,720 |
| | Recovered Cyclone Tailings | | | 622 |
| | | Net. | | 12,231 |
| | Difference (Burn Up) | | 1,223 | |
| **Avg Kiln Temp. (°F)** | | | 411 | |
| **Avg Duct Temp. (°F)** | | | 447 | |
| **Avg Baghouse Temp. (°F)** | | | 171 | |
| **Avg Lime Injection Rate (LB/HR)*** | | | 25 | |
| **Run No. 2:** | **Started 2/9/99 15:45** | **Finished 2/9/99 19:15** | | |
| **Material Description** | | | | |
| | Mixed material containing aluminum chips and curl, oil-based cutting fluid, and some iron. | | | |
| **Weights (lb)** | | | | |
| **Before Drying** | | | | |
| | Gross Weight | | 10,472 | |
| **After Drying** | | | | |
| | Clean Dry Weight | | | 8,568 |
| | Recovered Iron | | | 292 |
| | Recovered Fines | | | 650 |
| | Recovered Cyclone Tailings | | | 10 |
| | | Net | | 9,520 |
| | Difference (Burn Up) | | 952 | |
| **Avg Kiln Temp. (°F)** | | | 342 | |
| **Avg Duct Temp. (°F)** | | | 427 | |
| **Avg Baghouse Temp. (°F)** | | | 165 | |
| **Avg Lime Injection Rate (LB/HR)*** | | | 25 | |

*Based on four 50-lb bags/8-hr shift.

## Table 2-2. Reverberatory Furnace Operating Parameter Summary

**Melt Started: 2/11/99 11:15** — **Melt Stopped: 2/11/99 23:45**
**Melt Number: 99A05400** — **MRI Test Run No. 1**
**Furnace Number: 1** — **Product Number: 862201**
**Bundles Produced: 56**
**Avg. Baghouse Temp 1 (°F): 135** — **Avg. Baghouse Temp 2 (°F): 138**

| **Net Charge Weight Summary** | **Total** |
|---|---|
| Shavings, Turnings | 11,900 |
| Clean Solids, Plate | 7,340 |
| Shredded Aluminum | 67,580 |
| Shredded Casts | 16,700 |
| CL CU AL Radiators-Raw Mtrl. | 7,520 |
| Silicon - Raw Material | 12,640 |
| Total Net Charge Weight (lb) | 123,680 |
| Net Chlorine Injection Weight (lb) | 826 |

| **Production Time Summary** | | |
|---|---|---|
| Alloy Time | 0.25 | |
| Charge Time | 7.50 | |
| Clean Off | 1.25 | |
| Tap Time | 3.50 | |
| Total Cycle Time (hr) | 12.50 | |
| **Average Charge Rate During Cycle (Lb/Hr)** | | **9,894** |
| **Average Chlorine Injection Rate During Cycle (Lb/Hr)** | | **66** |
| **Average Lime Injection Rate During Cycle (Lb/Hr)** | | **25** |

**Melt Started: 2/12/99 10:00** — **Melt Stopped: 2/12/99 23:00**
**Melt Number: 99A05600** — **MRI Test Run No. 2**
**Furnace Number: 1** — **Product Number: 862201**
**Bundles Produced: 66**
**Avg. Baghouse Temp 1 (°F): 117** — **Avg. Baghouse Temp 2 (°F): 127**

| **Net Charge Weight Summary** | **Total** |
|---|---|
| Shavings, turnings | 17,760 |
| Shredded Aluminum | 68,160 |
| Road Signs | 2,320 |
| Shredded Casts | 19,400 |
| CL CU AL Radiators-Raw Mtrl | 4,500 |
| Unclean CU AL Radiators | 5,440 |
| Shredder Material | 940 |
| Silicon-Raw Material | 9,600 |
| Total Net Charge Weight (lb) | 128,120 |
| Net Chlorine Injection Weight (lb) | 1,140 |

| **Production Time Summary** | | |
|---|---|---|
| Charge Time | 7.25 | |
| Clean Off | 1.75 | |
| Tap Time | 4.00 | |
| Total Cycle Time (hr) | 13.00 | |
| **Average Charge Rate During Cycle (Lb/Hr)** | | **9,855** |
| **Average Chlorine Injection Rate During Cycle (Lb/Hr)** | | **88** |
| **Average Lime Injection Rate During Cycle (Lb/Hr)** | | **25** |

# Section 3.
# Test Results

## 3.1 Objectives and Test Matrix

The purpose of this test project was to obtain uncontrolled and controlled POM and PAH emissions data from the chip drying process and a side-well reverberatory furnace process at the Culp Aluminum Alloy facility to support a national emission standard for hazardous air pollutants. The specific objectives were to:

- Measure POM and PAH emissions simultaneously at the inlet and outlet of the lime-injected baghouse used to control emissions from the chip dryer, and

- Measure POM and PAH emissions simultaneously at the inlet and outlet of the lime-injected baghouse used to control emissions from the side-well reverberatory Furnace No.1.

The test matrix is summarized in Table 3-1. The target POM and PAH compounds are listed in Table 3-2. Testing was done during normal process operation. One test, consisting of two runs, was conducted on the lime-injected baghouse for the chip dryer, and another test, also consisting of two runs was conducted on the lime-injected baghouse for the side-well reverberatory furnace. Each series of two test runs was conducted with simultaneous sampling at inlet and outlet locations for all emission components being measured. Measured emission parameters were identical at inlet and outlet locations for both tests. All sample analysis for POM and PAHs was performed at MRI's laboratories in Kansas City, Missouri.

## Table 3-1. Test Matrix—Summary of Sampling and Analysis Parameters and Methods Per Test Run

| Sampling location | Sampling or measurement time | Test method and sample size | Emission Parameters | Total number of samples or sample component sets per run | Preparation method | Analytical method |
|---|---|---|---|---|---|---|
| Chip dryer lime-injected baghouse inlet | 3 hours | SW-846, Method 0010, ≥3 $m^3$ | POM and PAHs[a] | 1 set | Solvent extraction | GC/MS (SW-846, Method 8270C) |
| | | 40 *CFR* 60, Appendix A, Method 2 | Velocity, pressure, temperature, volumetric flow rate | NA | NA | Pitot tube, thermocouple |
| | | 40 *CFR* 60, Appendix A, Method 3B, ≥20L | Molecular weight | 1 | NA | Orsat |
| | | 40 *CFR* 60, Appendix A, Method 4, ≥3 $m^3$ | Moisture | 1 | NA | Gravimetric |
| Chip dryer lime-injected baghouse outlet | 3 hours | SW-846, Method 0010, ≥3 $m^3$ | POM and PAHs[a] | 1 set | Solvent extraction | GC/MS (SW-846, Method 8270C) |
| | | 40 *CFR* 60, Appendix A, Method 2 | Velocity, pressure, temperature, volumetric flow rate | NA | NA | Pitot tube, thermocouple |
| | | 40 *CFR* 60, Appendix A, Method 3B, ≥20L | Molecular weight | 1 | NA | Orsat |
| | | 40 *CFR* 60, Appendix A, Method 4, ≥3 $m^3$ | Moisture | 1 | NA | Gravimetric |

[a] The POM and PAHs to be analyzed are those listed in Table 3-2.

## Table 3-1 (Continued)

| Sampling location | Sampling or measurement time | Test method and sample size | Emission Parameters | Total number of samples or sample component sets per run | Preparation method | Analytical method |
|---|---|---|---|---|---|---|
| Reverberatory furnace no.1 lime-injected baghouse inlet | 1 entire cycle | SW-846, Method 0010, ≥3 $m^3$ | POM and PAHs[a] | 1 set | Solvent extraction | GC/MS (SW-846, Method 8270C) |
| | | 40 *CFR* 60, Appendix A, Method 2 | Velocity, pressure, temperature, volumetric flow rate | NA | NA | Pitot tube, thermocouple |
| | | 40 *CFR* 60, Appendix A, Method 3B, ≥20L | Molecular weight | 1 | NA | Orsat |
| | | 40 *CFR* 60, Appendix A, Method 4, ≥3 $m^3$ | Moisture | 1 | NA | Gravimetric |
| Reverberatory furnace no. 1 lime-injected baghouse outlet | 1 entire cycle | SW-846, Method 0010, ≥3 $m^3$ | POM and PAHs[a] | 1 set | Solvent extraction | GC/MS (SW-846, Method 8270C) |
| | | 40 *CFR* 60, Appendix A, Method 2 | Velocity, pressure, temperature, volumetric flow rate | NA | NA | Pitot tube, thermocouple |
| | | 40 *CFR* 60, Appendix A, Method 3B, ≥20L | Molecular weight | 1 | NA | Orsat |
| | | 40 *CFR* 60, Appendix A, Method 4, ≥3 $m^3$ | Moisture | 1 | NA | Gravimetric |

[a] The POM and PAHs to be analyzed are those listed in Table 3-2.

**Table 3-2. List of Target Compounds**

| Compound | CAS No. |
|---|---|
| Acenaphthene | 83-32-9 |
| Acenaphthylene | 208-96-8 |
| Anthracene | 120-12-7 |
| Benz[*a*]anthracene | 56-55-3 |
| Benzo[*a*]pyrene | 50-32-8 |
| Benzo[*b*]fluoranthene | 205-99-2 |
| Benzo[*g,h,i*]perylene | 191-24-2 |
| Benzo[*k*]fluoranthene | 207-08-9 |
| 4-Bromophenyl phenyl ether | 101-55-3 |
| 1-Chloronaphthalene | 90-13-1 |
| Chrysene | 218-01-9 |
| Dibenzofuran | 132-64-9 |
| Dibenz[*a,h*]anthracene | 53-70-3 |
| Dibenzothiophene[a] | 132-65-0 |
| Fluoranthene | 206-44-0 |
| Fluorene | 86-73-7 |
| Hexachlorobenzene | 118-74-1 |
| Indeno(1,2,3-cd)pyrene | 193-39-5 |
| Naphthalene | 91-20-3 |
| Phenanthrene | 85-01-8 |
| Pyrene | 129-00-0 |

[a] Not listed in Method 8270C.

## 3.2 Test Schedule

Testing began February 9 and continued through February 12, 1999. Table 3-3 presents the test run times. The first test run at the chip dryer was preceded by preliminary measurements and a check for absence of cyclonic flow on the day of the run. No check for cyclonic flow was conducted at the reverbatory furnace due to time constraints and because duct configurations and the proximity of upstream and downstream disturbances indicated that any cyclonic or non-laminar flow would be insignificant and well with the criteria specified in Method 1. Once preliminary measurements were completed and final preparations were in progress, the Site Coordinator and other personnel were notified of run start times.

## Table 3-3. Emissions Testing Run Times

| Run No./Location | | Date | Start Time | Stop Time | Sampling Time (min) |
|---|---|---|---|---|---|
| **Chip Dryer Baghouse Inlet** | | | | | |
| | Run 1 | 2/9/99 | 10:15 | 11:45 | 90 |
| | | | 12:15 | 13:45 | 90 |
| | | | | Total: | 180 |
| | Run 2 | 2/9/99 | 15:45 | 17:15 | 90 |
| | | | 17:45 | 19:15 | 90 |
| | | | | Total: | 180 |
| **Chip Dryer Baghouse Outlet** | | | | | |
| | Run 1 | 2/9/99 | 10:15 | 11:45 | 90 |
| | | | 12:15 | 13:45 | 90 |
| | | | | Total: | 180 |
| | Run 2 | 2/9/99 | 15:45 | 17:15 | 90 |
| | | | 17:45 | 19:15 | 90 |
| | | | | | 180 |
| **Furnace No. 1 Baghouse Inlet** | | | | | |
| | Run 1 | 2/11/99 | 11:30 | 14:00 | 150 |
| | | | 14:15 | 16:45 | 150 |
| | | | 17:15 | 19:45 | 150 |
| | | | 19:55 | 23:45 | 230 |
| | | | | Total: | 680 |
| | Run 2 | 2/12/99 | 10:15 | 10:35 | 20 |
| | | | 10:45 | 12:55 | 130 |
| | | | 13:00 | 15:30 | 150 |
| | | | 16:10 | 18:40 | 150 |
| | | | 18:55 | 23:15 | 260 |
| | | | | Total: | 710 |
| **Furnace No. 1 Baghouse Outlet** | | | | | |
| | Run 1 | 2/11/99 | 11:30 | 14:00 | 150 |
| | | | 14:15 | 16:45 | 150 |
| | | | 17:00 | 19:30 | 150 |
| | | | 19:35 | 23:45 | 250 |
| | | | | Total: | 700 |
| | Run 2 | 2/12/99 | 10:15 | 12:45 | 150 |
| | | | 12:50 | 15:20 | 150 |
| | | | 15:35 | 18:05 | 150 |
| | | | 18:15 | 23:15 | 300 |
| | | | | Total: | 750 |

## 3.3 Field Test Changes and Problems

### 3.3.1 Sampling

Changes from the site-specific test plan and the quality assurance project plan (QAPP) implemented at the test site and problems encountered during the tests are discussed here.

Three changes from the site-specific test plan and the QAPP were implemented as a result of conditions encountered at the test site.

1. No checks for absence of cyclonic flow were conducted at the furnace baghouse locations. The inlet location met the Method 1 eight- and two-diameter criteria, and the configuration of the stack indicated that any cyclonic or non-laminar flow would be insignificant and meet Method 1 criteria.

2. EPA made a decision at the test site to test the furnace baghouse through entire cycles instead of conducting 3-hour runs as indicated in the plans. Because there was some uncertainty as to the length of each cycle, it was decided to conduct 10 hours of sampling with an equal amount of time at each traverse point. After 10 hours of sampling, single-point sampling was conducted for the remainder of the run. The velocity at the point sampled approximated the average velocity at the location when single-point sampling was started.

3. EPA made a decision at the test site that two (2) runs at the chip dryer baghouse and two (2) runs at the furnace baghouse rather than three runs at each location would provide the data needed for the purpose of the tests.

Three problems were encountered during the tests.

1. During the first run at the baghouse inlet for the chip dryer, the gas sample bag developed a leak. The bag was replaced with a new bag midway through the run. Because of this, a valid sample for gas molecular weight determination was collected only for the last half of the run. Analytical results from the bag sample collected during the second run on the same day are the same as those for the last half of the first run. Because the results from both runs were the same and the process appeared to be running at a steady condition, the results from the bag representing half of the run were used for the entire run.

2. The duration of the runs at the furnace baghouse made it necessary to collect two gas bag samples at each location during the first run. The analytical results from each bag at a location were combined on a time-weighted basis to arrive at the average results for the run. Sampling flow rates were lowered for the second run

so that only one bag had to be used at each location. At approximately 2 hours before the end of each run, bag sampling was stopped because the bags became full. It was determined during the first run that the gas being sampled during the first half of a cycle contained a small amount of carbon dioxide and a small amount of additional oxygen from the combustion and reduction reactions occurring during furnace charging. During the final half of a cycle, the gas being sampled was essentially ambient air. Because the gas being emitted during an entire cycle was essentially ambient air and the gas composition during each half of a run was not significantly different for the purpose of molecular weight determination, the lack of sampling during the final 2 hours of each run did not impact the gas molecular weight results.

3. Volumetric gas flow rate measurements (dry standard cubic feet per minute) for inlet and outlet locations did not agree well. Possible reasons for the discrepancies follow:

   a. The flow rate results at the chip dryer baghouse outlet were approximately 9 to 11% lower that those at the inlet. The discrepancy was not due to gas molecular weight differences. During the test, some fugitive emissions from baghouse doors and joints were observed, indicating that some outleakage occurred between the inlet and outlet locations. Also, the location of the two ports on the outlet duct (stack) may not have been optimized for representative flow data collection. The gas in the duct exited the baghouse horizontally to a bend after which it was directed vertically upward. The proximity of the ports in the vertical section to the bend indicated that the velocity profile in the cross sectional sampling area would be irregular. This was verified by observation of impacted particulate matter on a portion of the duct wall that was directly downstream of the outside of the bend. The sampling area near the wall with impacted particulate matter was between the two traverses because the ports were located 45 degrees from the curvature of the bend rather than 0 and 90 degrees. This did not allow sampling points to be located in the cross sectional area where the highest velocities would be expected to occur.

   b. The flow rate results at the furnace baghouse outlet were approximately 18 to 22% higher that those at the inlet. The discrepancy was not due to gas molecular weight differences. The lime injection pipe and possibly some other points of inleakage caused a significant discrepancy in flow rate results between the two locations.

### 3.3.2 Analysis

The QAPP had been amended to reflect data quality control objectives appropriate to analytes of interest. The change involved use of additional surrogates during analysis to assess recoveries of target compounds in addition to PAHs. Analyses were performed according to the amended plan.

All XAD/filter extracts were colored to some degree. When extracts from the furnace baghouse inlet were put into the Kuderna-Danish concentrator, they coated the inside with fine black material. When this occurred, it was decided that the samples should be filtered through Acrodiscs prior to final concentration.

The internal standard recovery for the furnace baghouse inlet run 2 sample was low for $d_{12}$-Perylene. A duplicate analysis was performed on a 1:5 dilution with similar results. Matrix effects were suspected to be the cause. Results for analagous compounds have been flagged in Section 3.4 of this report.

## 3.4 Summary of Test Results

Data obtained from sampling trains are summarized in Table 3-4. Each sampling train provided data on gas velocity, temperature, pressure, $O_2$, $CO_2$, and volumetric flow rates. Results from semivolatile organic compounds analysis are summarized in Tables 3-5 through 3-8 along with subsequent calculations to obtain POM and PAH concentrations and emissions.

## Table 3-4. Method 0010 Sampling Data Summary

| Sampling location | Chip dryer baghouse inlet duct | | Chip dryer baghouse outlet stack | |
|---|---|---|---|---|
| Run number | 1 | 2 | 1 | 2 |
| Date | 02/09/99 | 02/09/99 | 02/09/99 | 02/09/99 |
| Run time | 1015-1345 | 1545-1915 | 1015-1345 | 1545-1915 |
| Sampling time, minutes | 180 | 180 | 180 | 180 |
| Flow rate at dry std, conditions | | | | |
| dscm/min | 175 | 162 | 156 | 147 |
| dscfm | 6,183 | 5,704 | 5,516 | 5,196 |
| Flow rate at wet std. conditions | | | | |
| scm/min | 185 | 170 | 165 | 155 |
| scfm | 6,542 | 5,994 | 5,816 | 5,485 |
| Flow rate at actual conditions | | | | |
| acm/min | 229 | 209 | 197 | 186 |
| acfm | 8,094 | 7,365 | 6,972 | 6,559 |
| Average gas velocity | | | | |
| meters/min | 1,446 | 1,316 | 706 | 664 |
| feet/min | 4,744 | 4,316 | 2,317 | 2,180 |
| Average gas temperature | | | | |
| °C | 79 | 76 | 73 | 71 |
| °F | 175 | 169 | 163 | 161 |
| Average gas pressure | | | | |
| mm Hg | 29.08 | 29.02 | 29.47 | 29.41 |
| in. Hg | 739 | 737 | 749 | 747 |
| Moisture (water vapor), % v/v | 5.5 | 4.8 | 5.2 | 5.3 |
| Dry gas mol. wt., g/g-mole (lb/lb-mole) | 28.94 | 28.94 | 28.93 | 28.93 |
| Wet gas mol. wt., g/g-mole (lb/lb-mole) | 28.34 | 28.41 | 28.36 | 28.35 |
| Carbon dioxide, % v/v dry basis | 1.0 | 1.0 | 0.9 | 0.9 |
| Oxygen, % v/v dry basis | 19.4 | 19.4 | 19.6 | 19.6 |
| Carbon monoxide, % v/v dry basis | 0.0 | 0.0 | 0.0 | 0.0 |
| Average isokinetic sampling variation, % | 99.2 | 98.4 | 102.6 | 102.4 |
| Gas sample volume | | | | |
| dry standard $m^3$ | 3.645 | 3.335 | 2.861 | 2.693 |
| dry standard $ft^3$ | 128.727 | 117.791 | 101.049 | 95.091 |

## Table 3-4 (Continued)

| Sampling location | Furnace no. 1 baghouse inlect duct | | Furnace no.1 baghouse outlet stack | |
|---|---|---|---|---|
| Run number | 1 | 2 | 1 | 2 |
| Date | 02/11/99 | 02/12/99 | 02/11/99 | 02/12/99 |
| Run time | 1130-2345 | 1015-2315 | 1130-2345 | 1015-2315 |
| Sampling time, minutes | 680 | 710 | 700 | 750 |
| Flow rate at dry std, conditions | | | | |
| dscm/min | 570 | 617 | 697 | 728 |
| dscfm | 20,119 | 21,788 | 24,631 | 25,698 |
| Flow rate at wet std. conditions | | | | |
| scm/min | 582 | 621 | 713 | 734 |
| scfm | 20,569 | 21,914 | 25,183 | 25,923 |
| Flow rate at actual conditions | | | | |
| acm/min | 670 | 693 | 775 | 762 |
| acfm | 23,647 | 24,483 | 27,376 | 26,917 |
| Average gas velocity | | | | |
| meters/min | 948 | 982 | 728 | 716 |
| feet/min | 3,111 | 3,221 | 2,388 | 2,348 |
| Average gas temperature | | | | |
| °C | 59 | 51 | 42 | 29 |
| °F | 138 | 123 | 108 | 84 |
| Average gas pressure | | | | |
| mm Hg | 29.49 | 29.60 | 29.59 | 29.70 |
| in. Hg | 749 | 752 | 752 | 754 |
| Moisture (water vapor), % v/v | 2.2 | 0.6 | 2.2 | 0.9 |
| Dry gas mol. wt., g/g-mole (lb/lb-mole) | 28.87 | 28.87 | 28 86 | 28.87 |
| Wet gas mol. wt., g/g-mole (lb/lb-mole) | 28.63 | 28.81 | 28 63 | 28.77 |
| Carbon dioxide, % v/v dry basis | 0.2 | 0.2 | 0.2 | 0.2 |
| Oxygen, % v/v dry basis | 20.9 | 20.9 | 20.9 | 20.9 |
| Carbon monoxide, % v/v dry basis | 0.0 | 0.0 | 0.0 | 0.0 |
| Average isokinetic sampling variation, % | 99.6 | 98.5 | 101.0 | 100.1 |
| Gas sample volume | | | | |
| dry standard $m^3$ | 5.980 | 6.691 | 5.069 | 5.620 |
| dry standard $ft^3$ | 211.180 | 236.299 | 179.014 | 198.466 |

## Table 3-5. Semivolatile Organic Compound Emission Rate at Chip Dryer Baghouse[a]

| | Baghouse Inlet Duct | | | | | | Baghouse Outlet Stack | | | | | |
|---|---|---|---|---|---|---|---|---|---|---|---|---|
| | Amount in train (μg) | | Conc. (μg/dscm) | | Emission Rate (lb/hr) | | Amount in train (μg) | | Conc. (μg/dscm) | | Emission Rate (lb/hr) | |
| | Run 1 | Run 2 | Run 1 | Run 2 | Run 1 | Run 2 | Run 1 | Run 2 | Run 1 | Run 2 | Run 1 | Run 2 |
| Acenaphthene | – | – | – | – | – | – | – | – | – | – | – | – |
| Acenaphthylene | 11.4 | – | 3.1 | – | 7.26E-05 | – | 9.61 | – | 3.4 | – | 6.93E-05 | – |
| Anthracene | – | – | – | – | – | – | – | – | – | – | – | – |
| Benz[*a*]anthracene | – | – | – | – | – | – | – | – | – | – | – | – |
| Benzo[*a*]pyrene | – | – | – | – | – | – | – | – | – | – | – | – |
| Benzo[*b*]fluoranthene | – | – | – | – | – | – | – | – | – | – | – | - |
| Benzo[*g,h,i*]perylene | – | – | – | – | – | – | – | – | – | – | – | – |
| Benz[k]fluoranthene | – | – | – | – | – | – | – | – | – | – | – | – |
| 4-Bromophenyl phenyl ether | – | – | – | – | – | – | – | – | – | – | – | – |
| 1-Chloronaphthalene | 16.3 | – | 4.5 | – | 1.03E-04 | – | 10.3 | 8.84 | 3.6 | 3.3 | 7.41E-05 | 6.39E-05 |
| Chrysene | – | – | – | – | – | – | – | – | – | – | – | - |
| Dibenzofuran | 64.6 | 39.6 | 17.7 | 11.9 | 4.10E-04 | 2.54E-04 | 40.3 | 24.5 | 14.1 | 9.1 | 2.91E-04 | 1.77E-04 |
| Dibenz[*a,h*]anthracene | – | – | – | – | – | – | – | – | – | – | – | – |
| Dibenzothiophene | 8.64 | 6.49 | 2.4 | 1.9 | 5.48E-05 | 4.17E-05 | – | – | – | – | – | – |
| Fluoranthene | 12.2 | 7.53 | 3.4 | 2.3 | 7.76E-05 | 4.84E-05 | – | – | – | – | – | – |
| Fluorene | – | – | – | – | – | – | 12.0 | – | 4.2 | – | 8.63E-05 | – |
| Hexachlorobenzene | 13.7 | – | 3.7 | – | 8.68E-05 | – | – | – | – | – | – | – |
| Indeno(1,2,3-cd)pyrene | – | – | – | – | – | – | – | – | – | – | – | – |
| Naphthalene | 687 | 180 | 188.4 | 53.9 | 4.36E-03 | 1.16E-03 | 471 | 275 | 164.7 | 102.2 | 3.40E-03 | 1.99E-03 |
| Phenanthrene | 49.5 | 28.5 | 13.6 | 8.5 | 3.14E-04 | 1.83E-04 | 34.1 | 23.6 | 11.9 | 8.8 | 2.46E-04 | 1.70E-04 |
| Pyrene | – | – | – | – | – | – | – | – | – | – | – | – |
| **Gas Sample Volume (dscm)** | | | 3.645 | 3.335 | | | | | 2.861 | 2.693 | | |
| **Gas Flow Rate (dscm/min)** | | | | | 175 | 162 | | | | | 156 | 147 |

[a] The "-" symbol indicates that analyte levels were less than lowest calibration standard or that no calculation could be performed on an analyte at levels below lowest calibration standard.

## Table 3-6. Semivolatile Organic Compound Emission Rate at Reverberatory Furnace No. 1 Baghouse[a]

| | Baghouse Inlet Duct | | | | | | Baghouse Outlet Stack | | | | | |
|---|---|---|---|---|---|---|---|---|---|---|---|---|
| | Amount in train (μg) | | Conc. (μg/dscm) | | Emission Rate (lb/hr) | | Amount in train (μg) | | Conc. (μg/dscm) | | Emission Rate(lb/hr) | |
| | Run 1 | Run 2 | Run 1 | Run 2 | Run 1 | Run 2 | Run 1 | Run 2 | Run 1 | Run 2 | Run 1 | Run 2 |
| Acenaphthene | – | – | – | – | – | – | 10.5 | – | 2.1 | – | 1.90E-04 | – |
| Acenaphthylene | 911 | 327 | 152.3 | 48.8 | 1.15E-02 | 3.98E-03 | 414 | 741 | 81.6 | 131.9 | 7.53E-03 | 1.27E-02 |
| Anthracene | 106 | 43.7 | 17.7 | 6.5 | 1.34E-03 | 5.32E-04 | 28.0 | – | 5.5 | – | 5.09E-04 | – |
| Benz[*a*]anthracene | 77.9 | 70.9 | 13.0 | 10.6 | 9.83E-04 | 8.65E-04 | – | – | – | – | – | – |
| Benzo[*a*]pyrene | 32.8 | –[b] | 5.5 | – | 4.13E-04 | – | – | – | – | – | – | – |
| Benzo[*b*]fluoranthene | 152 | 930[b] | 25.5 | 139 | 1.92E-03 | 1.13E-02 | – | – | – | – | – | – |
| Benzo[*g,h,i*]perylene | 25.8 | 189[b] | 4.3 | 28.2 | 3.25E-04 | 2.30E-03 | – | – | – | – | – | – |
| Benzo[*k*]fluoranthene | 31.8 | 202[b] | 5.3 | 30.2 | 4.00E-04 | 2.47E-03 | – | – | – | – | – | – |
| 4-Bromophenyl phenyl ether | – | – | – | – | – | – | – | – | – | – | – | – |
| 1-Chloronaphthalene | – | 29.0 | – | 4.3 | – | 3.54E-04 | 8.17 | – | 1.6 | – | 1.49E-04 | – |
| Chrysene | 109 | 207 | 18.2 | 30.9 | 1.37E-03 | 2.52E-03 | – | – | – | – | – | – |
| Dibenzofuran | 165 | 279 | 27.7 | 41.7 | 2.09E-03 | 3.40E-03 | 128 | 173 | 25.3 | 30.7 | 2.33E-03 | 2.96E-03 |
| Dibenz[*a,h*]anthracene | – | 95.1[b] | – | 14.2 | – | 1.16E-03 | – | – | – | – | – | – |
| Dibenzothiophene | 27.8 | 30.0 | 4.6 | 4.5 | 3.51E-04 | 3.66E-04 | 27 | – | 5.2 | – | 4.84E-04 | – |
| Fluoranthene | 316 | 685 | 52.8 | 102.3 | 3.98E-03 | 8.35E-03 | 193 | 59.2 | 38.0 | 10.5 | 3.51E-03 | 1.01E-03 |
| Fluorene | 142 | 230 | 23.8 | 34.3 | 1.80E-03 | 2.80E-03 | 80 | 147 | 15.7 | 26.1 | 1.45E-03 | 2.52E-03 |
| Hexachlorobenzene | – | 27.7 | - | 4.1 | – | 3.38E-04 | 26.6 | – | 5.2 | – | 4.84E-04 | – |
| Indeno(1,2,3-cd)pyrene | 36.0 | 327[b] | 6.0 | 48.9 | 4.54E-04 | 3.99E-03 | – | – | – | – | – | – |
| Naphthalene | 3199 | 5148 | 535.0 | 769.3 | 4.03E-02 | 6.28E-02 | 1934 | 3671 | 381.5 | 653.2 | 3.52E-02 | 6.29E-02 |
| Phenanthrene | 776 | 1286 | 129.7 | 192.2 | 9.78E-03 | 1.57E-02 | 543 | 596 | 107.2 | 106 | 9.88E-03 | 1.02E-02 |
| Pyrene | 255 | 271 | 42.6 | 40.5 | 3.21E-03 | 3.30E-03 | 35.0 | – | 6.9 | – | 6.36E-04 | – |
| **Gas Sample Volume (dscm)** | | | 5.980 | 6.691 | | | | | 5.069 | 5.620 | | |
| **Gas Flow Rate (dscm/min)** | | | | | 570 | 617 | | | | | 697 | 728 |

[a] The "-" symbol indicates that analyte levels were less than lowest calibration standard or that no calculation could be performed on an analyte at levels below lowest calibration standard.

[b] Internal standard outside acceptable range on original and dilution analyses.

## Table 3-7. Semivolatile Organic Compound Emissions (lb/ton of material processed) at Chip Dryer Baghouse[a]

| | Baghouse Inlet Duct | | | | | | Baghouse Outlet Stack | | | | | |
|---|---|---|---|---|---|---|---|---|---|---|---|---|
| | Amount in train (μg) | | Conc. (μg/dscm) | | Emission (lb/ton) | | Amount in train (μg) | | Conc. (μg/dscm) | | Emission (lb/ton) | |
| | Run 1 | Run 2 | Run 1 | Run 2 | Run 1 | Run 2 | Run 1 | Run 2 | Run 1 | Run 2 | Run 1 | Run 2 |
| Acenaphthene | – | – | – | – | – | – | – | – | – | – | – | – |
| Acenaphthylene | 11.4 | – | 3.1 | – | 3.78E-05 | – | 9.61 | – | 3.4 | – | 3.61E-05 | – |
| Anthracene | – | – | – | – | – | – | – | – | – | – | – | – |
| Benz[*a*]anthracene | – | – | – | – | – | – | – | – | – | – | – | – |
| Benzo[*a*]pyrene | – | – | – | – | – | – | – | – | – | – | – | – |
| Benzo[*b*]fluoranthene | – | – | – | – | – | – | – | – | – | – | – | - |
| Benzo[*g,h,i*]perylene | – | – | – | – | – | – | – | – | – | – | – | – |
| Benz[*k*]fluoranthene | – | – | – | – | – | – | – | – | – | – | – | – |
| 4-Bromophenyl phenyl ether | – | – | – | – | – | – | – | – | – | – | – | – |
| 1-Chloronaphthalene | 16.3 | – | 4.5 | – | 5.38E-05 | – | 10.3 | 8.84 | 3.6 | 3.3 | 3.85E-05 | 4.27E-05 |
| Chrysene | – | – | – | – | – | – | – | – | – | – | – | - |
| Dibenzofuran | 64.6 | 39.6 | 17.7 | 11.9 | 2.13E-04 | 1.70E-04 | 40.3 | 24.5 | 14.1 | 9.1 | 1.51E-04 | 1.18E-04 |
| Dibenz[a,h]anthracene | – | – | – | – | – | – | – | – | – | – | – | – |
| Dibenzothiophene | 8.64 | 6.49 | 2.4 | 1.9 | 2.85E-05 | 2.79E-05 | – | – | – | – | – | – |
| Fluoranthene | 12.2 | 7.53 | 3.4 | 2.3 | 4.04E-05 | 3.23E-05 | – | – | – | – | – | – |
| Fluorene | – | – | – | – | – | – | 12.0 | – | 4.2 | – | 4.49E-05 | – |
| Hexachlorobenzene | 13.7 | – | 3.7 | – | 4.51E-05 | – | – | – | – | – | – | – |
| Indeno(1,2,3-cd)pyrene | – | – | – | – | – | – | – | – | – | – | – | – |
| Naphthalene | 687 | 180 | 188.4 | 54.0 | 2.27E-03 | 7.74E-03 | 471 | 275 | 164.7 | 102.2 | 1.77E-03 | 1.33E-03 |
| Phenanthrene | 49.5 | 28.5 | 13.6 | 8.5 | 1.64E-04 | 1.22E-04 | 34.1 | 23.6 | 11.9 | 8.8 | 1.28E-04 | 1.14E-04 |
| Pyrene | – | – | – | – | – | – | – | – | – | – | – | – |
| **Gas Sample Volume (dscm)** | | | 3.645 | 3.335 | | | | | 2.861 | 2.693 | | |
| **Gas Flow Rate (dscm/min)** | | | | | 175 | 162 | | | | | 156 | 147 |
| **RunTime (min)** | | | | | 210 | 210 | | | | | 210 | 210 |
| **Total Weight of Material Processed During Run (tons)** | | | | | 6.727 | 5.236 | | | | | 6.727 | 5.236 |

[a] The "-" symbol indicates that analyte levels were less than lowest calibration standard or that no calculation could be performed on an analyte at levels below lowest calibration standard.

## Table 3-8. Semivolatile Organic Compound Emissions (lb/ton of material charged) at Reverberatory Furnace No. 1 Baghouse[a]

| | Baghouse Inlet Duct | | | | | | Baghouse Outlet Stack | | | | | |
|---|---|---|---|---|---|---|---|---|---|---|---|---|
| | Amount in train (μg) | | Conc. (μg/dscm) | | Emissions (lb/ton) | | Amount in train (μg) | | Conc. (μg/dscm) | | Emission (lb/ton) | |
| | Run 1 | Run 2 | Run 1 | Run 2 | Run 1 | Run 2 | Run 1 | Run 2 | Run 1 | Run 2 | Run 1 | Run 2 |
| Acenaphthene | – | – | – | – | – | – | 10.5 | – | 2.1 | – | 3.85E-05 | – |
| Acenaphthylene | 911 | 327 | 152.3 | 48.8 | 2.32E-03 | 8.08E-04 | 414 | 741 | 81.6 | 131.9 | 1.52E-03 | 2.58E-03 |
| Anthracene | 106 | 43.7 | 17.7 | 6.5 | 2.70E-04 | 1.08E-04 | 28.0 | – | 5.5 | – | 1.03E-04 | – |
| Benz[*a*]anthracene | 77.9 | 70.9 | 13.0 | 10.6 | 1.99E04 | 1.76E-04 | – | – | – | – | – | – |
| Benzo[*a*]pyrene | 32.8 | –[b] | 5.5 | – | 8.35E-05 | – | – | – | – | – | – | – |
| Benzo[*b*]fluoranthene | 152 | 930[b] | 25.5 | 139 | 3.88E-04 | 2.30E-03 | – | – | – | – | – | – |
| Benzo[*g,h,i*]perylene | 25.8 | 189[b] | 4.3 | 28.2 | 6.58E-05 | 4.67E-04 | – | – | – | – | – | – |
| Benzo[*k*]fluoranthene | 31.8 | 202[b] | 5.3 | 30.2 | 8.09E-05 | 5.01E-04 | – | – | – | – | – | – |
| 4-Bromophenyl phenyl ether | – | – | – | – | – | – | – | – | – | – | – | – |
| 1-Chloronaphthalene | – | 29.0 | – | 4.3 | – | 7.18E-05 | 8.17 | – | 1.6 | – | 3.01E-05 | – |
| Chrysene | 109 | 207 | 18.2 | 30.9 | 2.77E-04 | 5.12E-04 | – | – | – | – | – | – |
| Dibenzofuran | 165 | 279 | 27.7 | 41.7 | 4.22E-04 | 6.91E-04 | 128 | 173 | 25.3 | 30.7 | 4.71E-04 | 6.00E-04 |
| Dibenz[*a,h*]anthracene | – | 95.1[b] | – | 14.2 | – | 2.36E-04 | – | – | – | – | – | – |
| Dibenzothiophene | 27.8 | 30.0 | 4.6 | 4.5 | 7.09E-05 | 7.42E-05 | 27 | – | 5.2 | – | 9.77E-05 | – |
| Fluoranthene | 316 | 685 | 52.8 | 102.3 | 8.05E-04 | 1.69E-03 | 193 | 59.2 | 38.0 | 10.5 | 7.09E-04 | 2.06E-04 |
| Fluorene | 142 | 230 | 23.8 | 34.3 | 3.63E-04 | 5.68E-04 | 80 | 147 | 15.7 | 26.1 | 2.93E-04 | 5.11E-04 |
| Hexachlorobenzene | – | 27.7 | - | 4.1 | – | 6.86E-05 | 26.6 | – | 5.2 | – | 9.78E-05 | – |
| Indeno(1,2,3-cd)pyrene | 36.0 | 327[b] | 6.0 | 48.9 | 9.17E-05 | 8.10E-04 | – | – | – | – | – | – |
| Naphthalene | 3199 | 5148 | 535.0 | 769.3 | 8.15E-03 | 1.27E-02 | 1934 | 3671 | 381.5 | 653.2 | 7.11E-03 | 1.28E-02 |
| Phenanthrene | 776 | 1286 | 129.7 | 192.2 | 1.98E-03 | 3.18E-03 | 543 | 596 | 107.2 | 106 | 2.00E-03 | 2.07E-03 |
| Pyrene | 255 | 271 | 42.6 | 40.5 | 6.50E-04 | 6.71E-04 | 35.0 | – | 6.9 | – | 1.29E-04 | – |
| **Gas Sample Volume (dscm)** | | | 5.980 | 6.691 | | | | | 5.069 | 5.620 | | |
| **Gas Flow Rate (dscm/min)** | | | | | 570 | 617 | | | | | 697 | 728 |
| **Melt (Cycle) Time (min)** | | | | | 750 | 780 | | | | | 750 | 780 |
| **Total Charge Weight During Run (tons)** | | | | | 61.84 | 64.06 | | | | | 61.84 | 64.06 |

[a] The "-" symbol indicates that analyte levels were less than lowest calibration standard or that no calculation could be performed on an analyte at levels below lowest calibration standard.

[b] Internal standard outside acceptable range on original and dilution analyses.

# Section 4. Sampling, Analytical, and Process Data Collection Procedures

The sampling, analytical, and process data collection procedures used for this test project are described in this section. The published methods and other written procedures used are cited here. Details providing clarification and any modifications to or deviations from the published methods are presented in this section. Otherwise, the cited methods were followed.

## 4.1 Sampling Procedures

The samples collected required the use of one sampling system at each of the four sampling locations: an EPA Method 0010 isokinetic sampling train for POM and PAHs, along with an integral EPA Method 3B integrated gas sampling apparatus for carbon dioxide, and oxygen.

The following methods were employed in the use and operation of these sampling trains and systems.

### 4.1.1 Sample and Velocity Traverses

Method 1 in Appendix A of 40 *CFR* 60 was used to establish sampling points at the sampling locations for the isokinetic sampling trains. A check for absence of cyclonic flow was conducted at the chip dryer source prior to the start of sampling. A cyclonic flow check was not conducted at the reverbatory furnace (See Section 3.3.1 for more detail).

### 4.1.2 Determination of Gas Velocity and Volumetric Flow Rates

Method 2 in Appendix A of 40 *CFR* 60 was used to measure gas velocities and volumetric flow rates with Type S pitot tubes that are components of the isokinetic sampling trains. Pitot tubes meeting the dimensional specifications in the method were used. Pitot tube coefficients were adjusted for blockage in the gas stream caused by the probe assemblies used during sampling. An average adjusted coefficient for each such pitot tube was calculated in a spreadsheet using the procedures cited in Method 2.

Pitot tube blowback modules using pressurized air were incorporated into the pressure measurement systems used at the inlet locations for manual purging of any accumulated moisture and particulate matter from the pitot tubes during a test run to eliminate any need to disconnect lines during purging. Each pressure measurement system, i.e., pitot tube, pressure lines, blowback module (where used) in measurement mode, and inclined manometers, were leak checked as a unit before and after each test run.

An aneroid barometer calibrated against a mercury barometer was used to measure atmospheric pressure at the sampling locations.

Determination of dry gas molecular weight and moisture content of the gas is described below.

### 4.1.3 Determination of Dry Gas Molecular Weight

Method 3B in Appendix A of 40 *CFR* 60 was used to collect multi-point, integrated gas bag samples for dry gas molecular weight determination simultaneous with the isokinetic sampling. The integrated gas sampling apparatus that were used to collect the samples were components of the isokinetic sampling trains. Gas samples were extracted at a constant rate from the exhaust of an isokinetic sampling train just upstream from the outlet of the dry gas meter outlet orifice. MRI has determined through investigation that the impinger contents of a Method 0010 train do not cause interferences (e.g., loss of carbon dioxide) during sample collection that are detectable during analysis by Orsat analyzer. Also, at the start of isokinetic sampling, the entire Method 0010 train was purged with sampled gas before integrated gas sampling began. Each integrated gas sampling apparatus was leak checked before and after each test run. The tubing at the connection to the orifice was closed off, the integrated sampling apparatus pump was turned on, and the integrated sampling apparatus flow control valve was fully opened. No flow or bubbling at the tubing outlet (i.e., where the gas sample bag would be connected during sampling), that was submerged just below the surface of some water, was used to indicate that the apparatus was leak-free.

Gas samples were analyzed with an Orsat analyzer. Since gas composition at all sampling locations was expected to remain relatively constant during a test run, only one bag per train was expected to be used. However, due to the extended sampling time and the sample flow rate used during run 1 at the reverbatory furnace locations, two bags were required to prevent overfilling bags.

### 4.1.4 Determination of Moisture Content

Method 4 in Appendix A of 40 *CFR* 60 incorporated as part of Method 0010 was used to determine the moisture (water vapor) content of the gas streams. Moisture collected during sampling was determined gravimetrically from the difference between the initial and final weights of all of the impingers in a train, including the resin cartridge.

### 4.1.5 Sampling for POM and PAHs

Method 0010, "Modified Method 5 Sampling Train," in "Test Methods for Evaluating Solid Waste, Physical/Chemical (SW-846)" was used to collect samples to be analyzed for POM and PAHs.

Quartz nozzles and borosilicate glass probe liners were used. The internal surface of the compression fittings used for connecting nozzles to probe liners are permanently coated with abrasion-resistant Teflon® to prevent sample gas contact with the stainless steel.

Heat traced, ½-inch O.D. with ⅛- inch wall Teflon® tubing was used as a sample transfer line (STL) between the probe liner outlet and the filter holder inlet in the trains used at the inlet locations where vertical traverses were necessary. The use of a STL allowed separation of the probe from the filter/impinger box to facilitate sampling in the horizontal ducts where no overhead supports for a fully assembled sampling train existed. A STL was also used at the furnace baghouse outlet because of safety concerns regarding the use of a fully assembled train at that location. A glass coupling was used to connect the STL tubing to the probe liner outlet while the other end of the tube was connected directly to the filter holder inlet. The STL was maintained at 248 ± 25°F during sampling.

Filter supports in the filter holders were Teflon®-coated, stainless steel screening. Quartz fiber filters having the same specifications described in the method were used. Each cartridge (sorbent trap) was loaded with approximately 65 grams of XAD-2 resin.

During run 1 of the test project, one field blank train was set up, operated (i.e., heated and cooled as required, but with the nozzle tip capped), leak checked, and recovered in the same manner as the source sampling trains. This train was located on top of the chip baghouse near the outlet sampling location during operation.

Sample recovery procedures were followed as specified in the method, i.e., using a mixture of methanol and methylene chloride (1:1 v/v) for rinsing train components. The condensate collected in the impingers was not analyzed. The acidic nature of the condensate (i.e, pH ranging from 1 to 5) was not expected to retain the analytes intact should any actually break through the sorbent cartridge. However, all analytes of interest were expected to be retained in the sorbent cartridge. All samples were stored and shipped cold at water ice temperature (i.e., in ice chests with double-bagged ice checked daily by the sample custodian and in a cold storage room once received by the Laboratory Sample Custodian).

## 4.2 Analytical Procedures

The sample components recovered from the Method 0010 trains (i.e., XAD-2 resin and filter) were combined and extracted in the laboratory using Soxhlet extraction. The procedure for extraction involved placing the XAD-2 resin and filter samples in the Soxhlet apparatus, spiking with surrogate standards, and extracting with methylene chloride for a minimum of 16 hours.

The train rinses were extracted with methylene chloride using a separatory funnel. Following extraction, the methylene chloride was concentrated to a volume of 1- to 5-mL and combined with the corresponding XAD-2/filter extract for each train. The combined extract was concentrated to a final volume of 1.0 mL.

The extracts were analyzed according to the procedures specified in Method 8270C, "Semivolatile Organic Compounds by Gas Chromatography/Mass Spectrometry (GC/MS)," in "Test Methods for Evaluating Solid Waste, Physical/Chemical (SW-846)."

This analysis procedure included the separation of semivolatile target analytes (e.g., POM and PAHs) using gas chromatography followed by detection by mass spectrometry. No deviations from this procedure were made.

## 4.3 Process Data Collection

Process operating parameters were monitored and recorded by the facility, EPA, and MRI personnel. This data is given in Appendix E.

# Section 5. Quality Assurance (QA)/Quality Control (QC) Activities

The QA/QC procedures and QC requirements for this test project are summarized in this section. The QA/QC procedures and requirements specified in the EPA methods and MRI standard operating procedures were used. These procedures include, but are not limited to, (1) sampling equipment calibrations, (2) procedural elements of the methods, such as leak checks, proper traversing, placement of sampling probes, verification of the integrity of metering systems prior to the start of sampling, etc., and (3) the use of QC samples and analytical procedures such as reagent blank samples, laboratory control samples, and surrogate spiking. The performance and results of all QC procedures were recorded on appropriate forms, data sheets, or in field and laboratory notebooks as appropriate.

## 5.1 Equipment Calibration

QC procedures and the acceptability limits for sampling equipment calibrations are presented in Table 5-1. Calibration data sheets and equipment condition checklists used during calibration are provided in Appendix C. Equipment used for analysis of samples was calibrated according to the procedures in Methods 0010 and 8270C and the appropriate MRI equipment books.

## 5.2 Emission Measurements Quality Objectives

Specific QC procedures were followed to ensure the continuous production of useful and valid data. Table 5-2 presents a summary of specific criteria used for assessing overall emission measurement data quality along with the results of these determinations. The analytical narrative report included in Appendix D includes all results shown here.

### 5.2.1 Surrogate Recoveries

Lab surrogate recoveries are shown in Table 5-3 and field surrogate recoveries are shown in Table 5-4. As indicated in these tables, recoveries were within the data quality objectives, with one minor exception. The 2-Fluorobiphenyl recovery for run no. 2 of the furnace baghouse inlet was slightly higher than the recommended criteria.

### 5.2.2 Blank and Check Sample Results

Laboratory method blank and blank train results are provided in Table 5-5. As indicated in the table, results for all analytes were less than the lowest calibration standard.

Check samples include a laboratory control sample and a independent check standard. Results are shown in Table 5-6. As indicated in the table, all recovery results met the quality control criteria.

## 5.3 Data Audit

A data audit was conducted to evaluate the analytical data generated during this work assignment. The data were evaluated against the quality objectives for the measurement process which were presented in the QAPP (and amendment) and the specified test methods. The analytical data generated for this work assignment were audited by MRI's QA unit. The audit of the analytical data showed no systematic errors in the data measurement process. These data met the measurement quality objectives for this work assignment.

## 5.4 Data Assessment

An assessment of the overall quality of the data generated for this work assignment was conducted. The data assessment included a review of the sample collection data, preparation and analysis data, including calibration, surrogate recovers, laboratory control spike sample, and independent check sample analyzed with the samples. The data generated for this report are traceable and of known and acceptable quality.

## Table 5-1. Calibration Procedures and QC Criteria for Method 0010 Sampling Equipment

| Parameter | Calibration technique | Reference standard | Acceptance limit | Frequency | Objective Met? |
|---|---|---|---|---|---|
| 1. Sampling nozzle | Measure 3 diameters to nearest 0.001 in. and average measurements | Micrometer | Difference between high and low measurements, ≤ 0.004 in. | Prior to sampling | Yes |
| 2. Metering system—volume | Compare with calibrated critical orifices, 40 *CFR* 60, Appendix A, Method 5, Section 7.2 | Calibrated critical orifice | Difference between individual calibration factor values and average value, ≤ ± 0.02 | Prior to test series | Yes |
| | | | ≤ ± 5% of initial calibration factor | After test series | Yes |
| 3. Gas meter temperature | Compare to mercury-in-glass thermometer | ASTM thermometer | ≤ ±5°F difference from reference | Before and after test series | Yes |
| 4. Gas stream (stack) temperature sensor (thermocouple) | Heated block monitored with potentiometer thermocouple system | LIST traceable potentiometer thermocouple system | Difference of ≤ ±1.5% of minimum absolute stack temperature from absolute reference temperature (unsaturated gas streams); ≤ ±1°F difference from reference (saturated gas streams) | Before and after test series | Yes |
| 5 Final impinger outlet temperature sensor (thermocouple) | Compare to mercury-in-glass thermometer | ASTM thermometer | ≤ ±2°F difference from reference | Before and after test series | Yes |
| 6. Filter temperature sensor (thermocouple) | Compare to mercury-in-glass thermometer | ASTM thermometer | ≤ ±5°F difference from reference | Before and after test series | Yes |
| 7 Aneroid barometer | Compare to mercury barometer | Mercury column barometer | ≤ ±0.1 in. Hg difference from reference | Before and after test series | Yes |
| 8. Type S pitot tube | Measure dimensions according to 40 *CFR* 60, Appendix A, Method 2 for baseline coefficient of 0.84 | Micrometer and angle finder | Meets dimensional criteria specified in Method 2, Section 4.1 and Figures 2-2 and 2-3 | Before and after test series | Note 1 |

Note 1: Pitot tube M-103 used at Chip Dryer Inlet for Run No. 1 was slightly damaged after run.

## Table 5-2. Criteria for Emission Measurement Data

| Test parameters | Matrix | Method of determination | Frequency | Accuracy objective | Precision objective | Objective met? |
|---|---|---|---|---|---|---|
| POM and PAHs | Method 0010 train samples | Field surrogates (spiked XAD in lab during preparation of sampling train) | Each field sample and blank | 40% to 130% recovery | 60% RSD between pooled samples | Yes |
| | | Lab surrogates | Each field sample and blank | 18% to 137%, depending upon surrogate (see APP Amendment Record No. 1) | 40% RSD between samples | Yes |
| | | Laboratory reagent blank | One XAD/filter | Levels less than lowest calibration standard | NA | Yes |
| | | Laboratory control sample (blank reagents spiked with independent standard of native POM / PAHs) | One spiked XAD/filter | 50% to 150% recovery | NA | Yes |
| | | Independent (second source) check standard (EPA or certified POM / PAH reference standard) | After initial calibration | 80% to 120% difference | NA | Yes |
| Moisture (water vapor) | Impinger contents | Balance calibration check with calibration weight | Prior to initial and final gravimetric determinations and whenever balance drift is apparent | ±0 1g | NA | Yes |
| Moisture pressure temperature velocity | Gas stream being measured | Secondary technical review of field test data and equipment calibration records relative to EPA Methods 1-5 | Ongoing during testing | Validated by meeting posttest equipment calibration tolerances | NA, but multiple test runs may be used as indication of overall operation variability | Yes |
| $O_2$, $CO_2$, and CO by Orsat | Gas bag samples | Analysis of ambient air | Once prior to bag sample analysis | ±0.2%t by volume for ambient air oxygen | Method 3B criteria | Yes |
| | | Triplicate analysis of bag samples | Each bag sample | NA | Method 3B criteria | Yes |

**Table 5-3. Individual Semivolatile Laboratory Surrogate Recoveries (%)**

| | Chip dryer baghouse inlet | | Chip dryer baghouse outlet | | Furnace baghouse inlet | | Furnace baghouse outlet | | Blank train | RSD (%) | Method blank | LCS |
|---|---|---|---|---|---|---|---|---|---|---|---|---|
| Run: | Run 1 | Run 2 | Run 1 | Run 2 | Run 1 | Run 2 | Run 1 | Run 2 | NA | NA | NA | NA |
| Sampled: | 2/9/99 | 2/9/99 | 2/9/99 | 2/9/99 | 2/11/99 | 2/12/99 | 2/11/99 | 2/12/99 | NA | NA | NA | NA |
| 2-Fluorophenol | 75.3 | 78.1 | 74.9 | 79.1 | 71.1 | 65.1 | 69.8 | 72.6 | 68.5 | 6 | 69.1 | 64.41 |
| Phenol-$d_5$ | 90.4 | 98.5 | 89.7 | 81.4 | 81.7 | 80.0 | 62.2 | 80.8 | 80.4 | 13 | 76.7 | 76.2 |
| 2-Chlorophenol-$d_4$ | 83.7 | 87.5 | 88.9 | 88.5 | 96.6 | 93.1 | 59.6 | 91.2 | 75.7 | 13 | 75.6 | 72.0 |
| 1,2-Dichlorobenzene-$d_4$ | 72.8 | 75.6 | 77.8 | 72.1 | 85.7 | 85.8 | 70.4 | 82.0 | 71.2 | 8 | 72.8 | 69.2 |
| Nitrobenzene-$d_5$ | 77.3 | 73.9 | 108 | 99.2 | 91.2 | 118 | 119 | 108 | 81.6 | 17 | 76.3 | 73.3 |
| 2-Fluorobiphenyl | 87.8 | 92.7 | 93.9 | 91.2 | 106 | 124[a] | 89.7 | 103 | 82.9 | 12 | 83.2 | 81.8 |
| 2,4,6-Tribromophenol | 97.3 | 107 | 81.7 | 90.7 | 103 | 117 | 114 | 93.3 | 111 | 12 | 104 | 103 |
| Terphenyl-$d_{14}$ | 88.0 | 94.2 | 90.1 | 92.5 | 103 | 126 | 87.6 | 109 | 90.1 | 13 | 87.4 | 95.2 |

NA = Not applicable.

a Exceed recovery guideline upper limit of 115%.

**Table 5-4. Individual Field Surrogate Recoveries for Semivolatiles**

| | | | | Field surrogates, %R | |
|---|---|---|---|---|---|
| Sample no. | Location | Run | Date sampled | $d_{10}$-Fluoranthene | $d_{12}$-Benzo[*a*]pyrene |
| 1001-1003 | Chip Dryer Baghouse Inlet | 1 | 2/9/99 | 87.4 | 74.4 |
| 1006-1008 | Chip Dryer Baghouse Outlet | 1 | 2/9/99 | 97.2 | 85.2 |
| 2001-2003 | Chip Dryer Baghouse Inlet | 2 | 2/9/99 | 49.4 | 56.3 |
| 2006-2008 | Chip Dryer Baghouse Outlet | 2 | 2/9/99 | 93.8 | 90.4 |
| 1011-1013 | Furnace Baghouse Inlet | 1 | 2/11/99 | 96.9 | 107 |
| 1016-1018 | Furnace Baghouse Outlet | 1 | 2/11/99 | 128 | 93.6 |
| 2011-2013 | Furnace Baghouse Inlet | 2 | 2/12/99 | 97.2 | 59.3 |
| 2016-2018 | Furnace Baghouse Outlet | 2 | 2/12/99 | 101 | 89.0 |
| 1026-1028 | Blank Train | NA [1] | 2/2/99 | 95.2 | 90.2 |
| | Sample average recovery | | | 94.0 | 81.9 |
| | Sample standard deviation | | | 22 | 17 |
| | RSD% | | | 22% | 20% |
| MB | NA | NA | NA | 82.5 | 73.2 |
| LCS | NA | NA | NA | 91.5 | 93.7 |

[1] NA = Not applicable.
MB = Method Blank.
LCS = Lab Control Sample.

**Table 5-5. Laboratory Method Blank, And Blank Train Results for Semivolatiles**

| Analyte | Detection limit [1] total μg | Method blank total μg | Blank train total μg |
|---|---|---|---|
| Acenaphthene | 5 | ND[2] | ND |
| Acenaphthylene | 5 | ND | ND |
| Anthracene | 5 | ND | ND |
| Benz(*a*)anthracene | 5 | ND | ND |
| Benzo(*a*)pyrene | 5 | ND | ND |
| Benzo(*b*)fluoranthene | 5 | ND | ND |
| Benzo(*g,h,i*)perylene | 5 | ND | ND |
| Benzo(*k*)fluoranthene | 5 | ND | ND |
| 4-Bromophenyl-phenylether | 5 | ND | ND |
| 1-Chloronaphthalene | 5 | ND | ND |
| Chrysene | 5 | ND | ND |
| Dibenzofuran | 5 | ND | ND |
| Dibenz(*a,h*)anthracene | 5 | ND | ND |
| Dibenzothiophene | 5 | ND | ND |
| Fluoranthene | 5 | ND | ND |
| Fluorene | 5 | ND | ND |
| Hexachlorobenzene | 5 | ND | ND |
| Indeno(1,2,3-cd)pyrene | 5 | ND | ND |
| Naphthalene | 5 | ND | ND |
| Phenanthrene | 5 | ND | ND |
| Pyrene | 5 | ND | ND |

Footnotes: Only those numbers indicated in table are applicable.
[1] Detection limit is the lowest calibration standard.
[2] ND = Not detected, less than the lowest calibration standard.

**Table 5-6. Laboratory Control Spike and Independent Check Sample Recoveries for Semivolatiles**

| Analyte | LCS recovery %R | ICS recovery %R |
|---|---|---|
| Acenaphthene | 93.6 | 103 |
| Acenaphthylene | 94.4 | 101 |
| Anthracene | 101 | 105 |
| Benz(*a*)anthracene | 104 | 99 |
| Benzo(*a*)pyrene | 102 | 102 |
| Benzo(*b*)fluoranthene | 105 | 103 |
| Benzo(*g,h,i*)perylene | 104 | 104 |
| Benzo(*k*)fluoranthene | 103 | 110 |
| 4-Bromophenyl-phenylether | 99.2 | 102 |
| 1-Chloronaphthalene | 87.2 | 104 |
| Chrysene | 105 | 101 |
| Dibenzofuran | 92.8 | 100 |
| Dibenz(*a,h*)anthracene | 107 | 104 |
| Dibenzothiophene | NA[1] | 100 |
| Fluoranthene | 106 | 96 |
| Fluorene | 96.8 | 103 |
| Hexachlorobenzene | 101 | 98 |
| Indeno(1,2,3-cd)pyrene | 107 | 102 |
| Naphthalene | 83.6 | 100 |
| Phenanthrene | 100 | 102 |
| Pyrene | 104 | 101 |

[1] NA = Not applicable.

# Appendix A

## Sample Tracking Data

**List of Samples for Analysis**

| Emission Sample | Sample Number | Sample Component | End of Run |
|---|---|---|---|
| Chip dryer baghouse inlet duct - Run 1 | 1001<br>1002<br>1003<br>1004 | Train rinses<br>Filter<br>XAD cartridge<br>Condensate | 02/09/99<br>1:45 p.m. |
| Chip dryer baghouse outlet stack - Run 1 | 1006<br>1007<br>1008<br>1009 | Train rinses<br>Filter<br>XAD cartridge<br>Condensate | 02/09/99<br>1:45 p.m. |
| Chip dryer baghouse inlet duct - Run 2 | 2001<br>2002<br>2003<br>2004 | Train rinses<br>Filter<br>XAD cartridge<br>Condensate | 02/09/99<br>7:15 p.m. |
| Chip dryer baghouse outlet stack - Run 2 | 2006<br>2007<br>2008<br>2009 | Train rinses<br>Filter<br>XAD cartridge<br>Condensate | 02/09/99<br>7:15 p.m. |
| Furnace baghouse inlet duct - Run 1 | 1011<br>1012<br>1013<br>1014 | Train rinses<br>Filter<br>XAD cartridge<br>Condensate | 02/11/99<br>11:45 p.m. |
| Furnace baghouse outlet stack - Run 1 | 1016<br>1017<br>1018<br>1019 | Train rinses<br>Filter<br>XAD cartridge<br>Condensate | 02/11/99<br>11:45 p.m. |
| Furnace baghouse inlet duct - Run 2 | 2011<br>2012<br>2013<br>2014 | Train rinses<br>Filter<br>XAD cartridge<br>Condensate | 02/12/99<br>11:15 p.m. |
| Furnace baghouse outlet stack - Run 2 | 2016<br>2017<br>2018<br>2019 | Train rinses<br>Filter<br>XAD cartridge<br>Condensate | 02/12/99<br>11:15 p.m. |
| Field Blank Train | 1026<br>1027<br>1028 | Train rinses<br>Filter<br>XAD cartridge | 02/02/99<br>7:15 p.m. |
| Reagent Blanks: Methanol<br>Methylene chloride<br>Filter<br>XAD cartridge<br>Water | 1021<br>1022<br>1023<br>1024<br>1025 | NA | NA |

* PM = particulate matter

☐ CHAIN OF CUSTODY RECORD

☑ SAMPLE TRACEABILITY RECORD

Container (Cooler) No. XADs

Page 1 of 1

Field Sample Custodian: James Surman

Storage Requirements:
- ☑ Ice water, ≤ 4°C
- ☐ Dry ice
- ☐ Room Temp., ≤ 26°C
- ☐ Other: _____

| | | | | | | |
|---|---|---|---|---|---|---|
| Transfer No. | 1 | | | | | |
| Checked by (Initials)/Date | | | | | | |
| Lock or Seal Intact (Yes or No)/Time | | | | | | |
| 4951.03 Culp Al 1003 MOO10 XAD CARTRIDGE SCRAP DRYER BH INLET SAMPLE For disposal call: J.SURMAN | ✓ mc | | | | | |
| | Remarks: | | | | | |
| 4951.03 Culp Al 1008 MOO10 XAD CARTRIDGE SCRAP DRYER BH OUTLET SAMPLE | ✓ mc | | | | | |
| | Remarks: | | | | | |
| 4951.03 Culp Al 1028 MOO10 XAD CARTRIDGE BLANK TRAIN SAMPLE For disposal call: J.SURMAN MIDWEST RESEARCH INSTITUTE | ✓ mc | | | | | |
| | Remarks | | | | | |
| | | | | | | |
| | Remarks: | | | | | |
| | | | | | | |
| | Remarks. | | | | | |
| | | | | | | |
| | Remarks: | | | | | |
| | | | | | | |
| | Remarks: | | | | | |
| | | | | | | |
| | Remarks | | | | | |
| | | | | | | |
| | Remarks. | | | | | |
| | | | | | | |
| | Remarks: | | | | | |
| | | | | | | |
| | Remarks. | | | | | |

Sample Transfers:

| Relinquished By: | Received By: | Date | Time | No. | Reason for Transfer: |
|---|---|---|---|---|---|
| J Surman | Anthe Cherany/MRI | 02/15/99 | 1610 | 1 | To sample custodian |
| | | | | 2 | |
| | | | | 3 | |
| | | | | 4 | |

93-4 SEV surm wksht 020293

☐ CHAIN OF CUSTODY RECORD
☑ SAMPLE TRACEABILITY RECORD

Container (Cooler) No. XAD5

Page 1 of 1

Field Sample Custodian: James Surman

Storage Requirements:
☑ Ice water, ≤ 4°C
☐ Dry ice
☐ Room Temp., ≤ 26°C
☐ Other: _____

| | Transfer No. | | | | | |
|---|---|---|---|---|---|---|
| | 1 | | | | | |
| Checked by (Initials)/Date | | | | | | |
| Lock or Seal Intact (Yes or No)/Time | | | | | | |
| 4951.03 Culp Al 1024 MO010 XAD CARTRIDGE FIELD REAGENT BLANK | ✓ mwc | | | | | |
| | Remarks: | | | | | |
| 4951.03 Culp Al 1013 MO010 XAD CARTRIDGE FURNACE BH INLET SAMPLE | ✓ mwc | | | | | |
| | Remarks. | | | | | |
| 4951.03 Culp Al 1018 MO010 XAD CARTRIDGE FURNACE BH OUTLET SAMPLE For disposal call: J.SURMAN MIDWEST RESEARCH INSTITUTE | ✓ mwc | | | | | |
| | Remarks | | | | | |
| | | | | | | |
| | Remarks | | | | | |
| | | | | | | |
| | Remarks: | | | | | |
| | | | | | | |
| | Remarks | | | | | |
| | | | | | | |
| | Remarks. | | | | | |
| | | | | | | |
| | Remarks | | | | | |
| | | | | | | |
| | Remarks | | | | | |
| | | | | | | |
| | Remarks | | | | | |
| | | | | | | |
| | Remarks | | | | | |

Sample Transfers:

| Relinquished By: | Received By: | Date | Time | No. | Reason for Transfer: |
|---|---|---|---|---|---|
| J. Surman | Mike Chaney/MRI | 02/15/99 | 1608 | 1 | To sample custodian |
| | | | | 2 | |
| | | | | 3 | |
| | | | | 4 | |

93-4 SEV surm wksht 020293

☐ CHAIN OF CUSTODY RECORD
☑ SAMPLE TRACEABILITY RECORD

Container (Cooler) No. XAD3

Page 1 of 1

Field Sample Custodian: James Surman

Storage Requirements:
- ☑ Ice water, ≤ 4°C
- ☐ Dry ice
- ☐ Room Temp., ≤ 26°C
- ☐ Other: _____

| Transfer No. | 1 | | | | | |
|---|---|---|---|---|---|---|
| Checked by (Initials)/Date | | | | | | |
| Lock or Seal Intact (Yes or No)/Time | | | | | | |

| | | | | | | |
|---|---|---|---|---|---|---|
| 4951.03 Culp Al 2008<br>M0010 XAD CARTRIDGE<br>SCRAP DRYER BH OUTLET SAMPLE | ✓ mwc | | | | | |
| | Remarks: | | | | | |
| 4951.03 Culp Al 2003<br>M0010 XAD CARTRIDGE<br>SCRAP DRYER BH INLET SAMPLE | ✓ mwc | | | | | |
| | Remarks: | | | | | |
| 4951.03 Culp Al 2013<br>M0010 XAD CARTRIDGE<br>FURNACE BH INLET SAMPLE | ✓ mwc | | | | | |
| | Remarks | | | | | |
| 4951.03 Culp Al 2018<br>M0010 XAD CARTRIDGE<br>FURNACE BH OUTLET SAMPLE<br>For disposal call: J.SURMAN<br>MIDWEST RESEARCH INSTITUTE | ✓ mwc | | | | | |
| | Remarks: | | | | | |
| | | | | | | |
| | Remarks | | | | | |
| | | | | | | |
| | Remarks | | | | | |
| | | | | | | |
| | Remarks | | | | | |
| | | | | | | |
| | Remarks | | | | | |
| | | | | | | |
| | Remarks | | | | | |
| | | | | | | |
| | Remarks: | | | | | |
| | | | | | | |
| | Remarks. | | | | | |

Sample Transfers:

| Relinquished By: | Received By: | Date | Time | No. | Reason for Transfer: |
|---|---|---|---|---|---|
| J. Surman | Mike Cheney/MRI | 02/15/99 | 1604 | 1 | To sample custodian |
| | | | | 2 | |
| | | | | 3 | |
| | | | | 4 | |

93-4 SEV surm wksht 020293

☐ CHAIN OF CUSTODY RECORD

☑ SAMPLE TRACEABILITY RECORD

Container (Cooler) No. #1 Blanks

Page 1 of 1

Field Sample Custodian: James Surman

Storage Requirements:
- ☑ Ice water, ≤ 4°C
- ☐ Dry ice
- ☐ Room Temp., ≤ 26°C
- ☐ Other: _____

| | Transfer No. 1 | | | | | |
|---|---|---|---|---|---|---|
| | Checked by (Initials)/Date | | | | | |
| | Lock or Seal Intact (Yes or No)/Time | | | | | |
| 4951.03 Culp Al 1026<br>M0010 TRAIN RINSES<br>BLANK TRAIN SAMPLE | ✓ MWC<br>Remarks: | | | | | |
| 4951.03 Culp Al 1027<br>M0010 FILTER<br>BLANK TRAIN SAMPLE | ✓ MWC<br>Remarks: | | | | | |
| 4951.03 Culp Al 1021<br>M0010 METHANOL<br>FIELD REAGENT BLANK | ✓ MWC<br>Remarks: | | | | | |
| 4951.03 Culp Al 1022<br>M0010 METHYLENE CHLORIDE<br>FIELD REAGENT BLANK | ✓ MWC<br>Remarks: | | | | | |
| 4951.03 Culp Al 1023<br>M0010 FILTER<br>FIELD REAGENT BLANK | ✓ MWC<br>Remarks. | | | | | |
| 4951.03 Culp Al 1025<br>M0010 ASTM TYPE II WATER<br>FIELD REAGENT BLANK | ✓ MWC<br>Remarks. | | | | | |
| For disposal call: J.SURMAN<br>MIDWEST RESEARCH INSTITUTE | Remarks: | | | | | |
| | Remarks | | | | | |
| | Remarks: | | | | | |
| | Remarks. | | | | | |
| | Remarks | | | | | |

Sample Transfers:

| Relinquished By: | Received By: | Date | Time | No. | Reason for Transfer: |
|---|---|---|---|---|---|
| J Surman | Mike Thomas/MRI | 02/15/99 | 1615 | 1 | To sample custodian |
| | | | | 2 | |
| | | | | 3 | |
| | | | | 4 | |

93-4 SEV surm wksht 020293

☐ CHAIN OF CUSTODY RECORD

☑ SAMPLE TRACEABILITY RECORD

Container (Cooler) No. #2 Inlets

Page 1 of 2

Field Sample Custodian: James Surman

Storage Requirements:
- ☑ Ice water, ≤ 4°C
- ☐ Dry ice
- ☐ Room Temp., ≤ 26°C
- ☐ Other: _____

| | | | | | | |
|---|---|---|---|---|---|---|
| Transfer No. | 1 | | | | | |
| Checked by (Initials)/Date | | | | | | |
| Lock or Seal Intact (Yes or No)/Time | | | | | | |
| 4951.03 Culp Al 1001 MO010 TRAIN RINSES SCRAP DRYER BH INLET SAMPLE | ✓ MWC | | | | | |
| Remarks: | | | | | | |
| 4951.03 Culp Al 1002 MO010 FILTER SCRAP DRYER BH INLET SAMPLE | ✓ MWC | | | | | |
| Remarks: | | | | | | |
| 4951.03 Culp Al 1004 MO010 CONDENSATE SCRAP DRYER BH INLET SAMPLE | ✓ MWC | | | | | |
| Remarks. | pH 4.0 | | | | | |
| 4951.03 Culp Al 2001 MO010 TRAIN RINSES SCRAP DRYER BH INLET SAMPLE | ✓ MWC | | | | | |
| Remarks: | | | | | | |
| 4951.03 Culp Al 2002 MO010 FILTER SCRAP DRYER BH INLET SAMPLE | ✓ MWC | | | | | |
| Remarks | | | | | | |
| 4951.03 Culp Al 2004 MO010 CONDENSATE SCRAP DRYER BH INLET SAMPLE | ✓ MWC | | | | | |
| Remarks: | pH 3.5 | | | | | |
| 4951.03 Culp Al 1011 MO010 TRAIN RINSES FURNACE BH INLET SAMPLE | ✓ MWC | | | | | |
| Remarks. | | | | | | |
| 4951.03 Culp Al 1012 MO010 FILTER FURNACE BH INLET SAMPLE | ✓ MWC | | | | | |
| Remarks: | | | | | | |
| 4951.03 Culp Al 1014 MO010 CONDENSATE FURNACE BH INLET SAMPLE | ✓ MWC | | | | | |
| Remarks: | pH 1.5 | | | | | |
| 4951.03 Culp Al 2011 MO010 TRAIN RINSES FURNACE BH INLET SAMPLE | ✓ MWC | | | | | |
| Remarks. | | | | | | |
| 4951.03 Culp Al 2012 MO010 FILTER FURNACE BH INLET SAMPLE | ✓ MWC | | | | | |
| Remarks: | | | | | | |

For disposal call: J. SURMAN
MIDWEST RESEARCH INSTITUTE

Sample Transfers:

| Relinquished By: | Received By: | Date | Time | No. | Reason for Transfer: |
|---|---|---|---|---|---|
| [illegible] | Mike Chevanz/MRI | 02/15/99 | 1624 | 1 | To sample custodian |
| | | | | 2 | |
| | | | | 3 | |
| | | | | 4 | |

93-4 SEV surm wksht 020293

☐ CHAIN OF CUSTODY RECORD

☑ SAMPLE TRACEABILITY RECORD

Container (Cooler) No. #2 Inlets

Page 2 of 2

Field Sample Custodian: James Surman

Storage Requirements:
- ☑ Ice water, ≤ 4°C
- ☐ Dry ice
- ☐ Room Temp., ≤ 26°C
- ☐ Other: _____

| | | | | | |
|---|---|---|---|---|---|
| Transfer No. | 1 | | | | |
| Checked by (Initials)/Date | | | | | |
| Lock or Seal Intact (Yes or No)/Time | | | | | |
| 4951.03 Culp Al 2014 MO010 CONDENSATE FURNACE BH INLET SAMPLE For disposal call: J. SURMAN MIDWEST RESEARCH INSTITUTE | ✓ Mml | | | | |
| | Remarks: pH 3.0 | | | | |
| | | | | | |
| | Remarks: | | | | |
| | | | | | |
| | Remarks: | | | | |
| | | | | | |
| | Remarks: | | | | |
| | | | | | |
| | Remarks. | | | | |
| | | | | | |
| | Remarks. | | | | |
| | | | | | |
| | Remarks | | | | |
| | | | | | |
| | Remarks: | | | | |
| | | | | | |
| | Remarks: | | | | |
| | | | | | |
| | Remarks | | | | |
| | | | | | |
| | Remarks. | | | | |

Sample Transfers:

| Relinquished By: | Received By: | Date | Time | No. | Reason for Transfer: |
|---|---|---|---|---|---|
| J. Surman | Mike Chang | 02/15/94 | 1624 | 1 | To sample custodian |
| | | | | 2 | |
| | | | | 3 | |
| | | | | 4 | |

93-4 SEV surm wksht 020293

☐ CHAIN OF CUSTODY RECORD

☑ SAMPLE TRACEABILITY RECORD

Container (Cooler) No. #3 Outlets

Page 1 of 2

Field Sample Custodian: James Surman

Storage Requirements:
- ☑ Ice water, ≤ 4°C
- ☐ Dry ice
- ☐ Room Temp., ≤ 26°C
- ☐ Other: _____

| | | | | | | |
|---|---|---|---|---|---|---|
| Transfer No. | 1 | | | | | |
| Checked by (Initials)/Date | | | | | | |
| Lock or Seal Intact (Yes or No)/Time | | | | | | |
| 4951.03 Culp Al 1006 M0010 TRAIN RINSES SCRAP DRYER BH OUTLET SAMPLE | ✓ MWC | | | | | |
| Remarks: | | | | | | |
| 4951.03 Culp Al 1007 M0010 FILTER SCRAP DRYER BH OUTLET SAMPLE | ✓ MWC | | | | | |
| Remarks: | | | | | | |
| 4951.03 Culp Al 1009 M0010 CONDENSATE SCRAP DRYER BH OUTLET SAMPLE | ✓ MWC | | | | | |
| Remarks: pH 5.0 | | | | | | |
| 4951.03 Culp Al 2006 M0010 TRAIN RINSES SCRAP DRYER BH OUTLET SAMPLE | ✓ MWC | | | | | |
| Remarks: | | | | | | |
| 4951.03 Culp Al 2007 M0010 FILTER SCRAP DRYER BH OUTLET SAMPLE | ✓ MWC | | | | | |
| Remarks | | | | | | |
| 4951.03 Culp Al 2009 M0010 CONDENSATE SCRAP DRYER BH OUTLET SAMPLE | ✓ MWC | | | | | |
| Remarks: pH 5.0 | | | | | | |
| 4951.03 Culp Al 1016 M0010 TRAIN RINSES FURNACE BH OUTLET SAMPLE | ✓ MWC | | | | | |
| Remarks. | | | | | | |
| 4951.03 Culp Al 1017 M0010 FILTER FURNACE BH OUTLET SAMPLE | ✓ MWC | | | | | |
| Remarks: | | | | | | |
| 4951.03 Culp Al 1019 M0010 CONDENSATE FURNACE BH OUTLET SAMPLE | ✓ MWC | | | | | |
| Remarks pH 1.0 | | | | | | |
| 4951.03 Culp Al 2016 M0010 TRAIN RINSES FURNACE BH OUTLET SAMPLE | ✓ MWC | | | | | |
| Remarks: | | | | | | |
| 4951.03 Culp Al 2017 M0010 FILTER FURNACE BH OUTLET SAMPLE | ✓ MWC | | | | | |
| Remarks. | | | | | | |

For disposal call: J. SURMAN
MIDWEST RESEARCH INSTITUTE

Sample Transfers:

| Relinquished By: | Received By: | Date | Time | No. | Reason for Transfer: |
|---|---|---|---|---|---|
| [signature] | Mike Cheung/MRI | 02/15/99 | 1620 | 1 | To sample custodian |
| | | | | 2 | |
| | | | | 3 | |
| | | | | 4 | |

93-4 SEV surm wksht 020293

☐ CHAIN OF CUSTODY RECORD

☑ SAMPLE TRACEABILITY RECORD

Container (Cooler) No. #3 Outlets

Page 2 of 2

Field Sample Custodian: James Surman

Storage Requirements:
- ☑ Ice water, ≤ 4°C
- ☐ Dry ice
- ☐ Room Temp., ≤ 26°C
- ☐ Other: _____

| | Transfer No. | | | | | |
|---|---|---|---|---|---|---|
| | 1 | | | | | |
| Checked by (Initials)/Date | | | | | | |
| Lock or Seal Intact (Yes or No)/Time | | | | | | |
| 4951.03 Culp Al 2019<br>M0010 CONDENSATE<br>FURNACE BH OUTLET SAMPLE<br>For disposal call: J.SURMAN<br>MIDWEST RESEARCH INSTITUTE | ✓ mwc | | | | | |
| | Remarks: pH 1.0 | | | | | |
| | | | | | | |
| | Remarks: | | | | | |
| | | | | | | |
| | Remarks. | | | | | |
| | | | | | | |
| | Remarks. | | | | | |
| | | | | | | |
| | Remarks. | | | | | |
| | | | | | | |
| | Remarks | | | | | |
| | | | | | | |
| | Remarks | | | | | |
| | | | | | | |
| | Remarks | | | | | |
| | | | | | | |
| | Remarks. | | | | | |
| | | | | | | |
| | Remarks. | | | | | |
| | | | | | | |
| | Remarks. | | | | | |

Sample Transfers:

| Relinquished By: | Received By: | Date | Time | No. | Reason for Transfer: |
|---|---|---|---|---|---|
| J. Surman, P. | Mike Thomas/MRI | 02/25/99 | 1620 | 1 | To sample custodian |
| | | | | 2 | |
| | | | | 3 | |
| | | | | 4 | |

93-4 SEV surm wksht 020293

## SAMPLE RECEIPT CHECKLIST

MRI Project No. 4951-03-04-02

Samples Received by: Mike Cheamy / J.M Sviemay Date: 02/15/99

Airbill No. N/A Chain-of-Custody No. _____

Airbill present? Yes (No) Chain-of-Custody present? (Yes) No

Shipping container intact? (Yes) No Container type Coolers

Custody seals present? Yes (No) Seals intact? Yes (No) Seal Location: N/A

C-O-C properly filled out? Yes No Does C-O-C indicate sample type? (Yes) No

Ice packs or ice frozen? (Yes) No Samples cold? (Yes) No Temperature °C: N/A

Sample containers intact? (Yes) No Labels permanently affixed? (Yes) No

Sample containers leaking? Yes (No) Container type indicated? (Yes) No

Are all samples properly labeled and accounted for? (Yes) No

Are samples stored as indicated by the project leader? (Yes) No

Is the C-O-C filled out completely, signed, and dated? (Yes) No

If pH check upon receipt is required, indicate where it is recorded. Field Sample Custody Sheet

Sample storage location: 330-E

COMMENTS

# Sample Master LIMS
## Sample Login Report

**Customer Name:** EPA / EMC Option 1 **Order ID:** 990200012

**Project ID:** 4951 **Order Date:** 2/16/99

**Order Comment:** Hand delivered to sample control by J. Surman 2/15/99. 

| MRI Sample ID | Customer Sample ID | Matrix | Quantity | Date Collected | Date Received | Test | Test Group | Method | Due Date |
|---|---|---|---|---|---|---|---|---|---|
| 99000449 | 1003<br>Dryer BH Inlet | Air | 1 | 2/9/99 12 00 AM | 2/15/99 9 44 AM | test_smv | | | 3/15/99 9 44 00 |
| 99000450 | 1008<br>Dryer BH Outlet | Air | 1 | 2/9/99 12 00 AM | 2/15/99 9 44 AM | test_smv | | | 3/15/99 9 44 00 |
| 99000451 | 1028<br>Blank Train | Air | 1 | 2/2/99 12 00 AM | 2/15/99 9 44 AM | test_smv | | | 3/15/99 9 44 00 |
| 99000452 | 1024<br>Field Reagent Blk | Air | 1 | 2/9/99 12 00 AM | 2/15/99 9 44 AM | test_smv | | | 3/15/99 9 44 00 |
| 99000453 | 1013<br>Furn BH Inlet | Air | 1 | 2/11/99 12 00 AM | 2/15/99 9 44 AM | test_smv | | | 3/15/99 9 44 00 |
| 99000454 | 1018<br>Furn BH Outlet | Air | 1 | 2/11/99 12 00 AM | 2/15/99 9 44 AM | test_smv | | | 3/15/99 9 44 00 |
| 99000455 | 2008<br>Dryer BH Outlet | Air | 1 | 2/9/99 12 00 AM | 2/15/99 9.44 AM | test_smv | | | 3/15/99 9 44 00 |
| 99000456 | 2003<br>Dryer BH Inlet | Air | 1 | 2/9/99 12 00 AM | 2/15/99 9 44 AM | test_smv | | | 3/15/99 9 44 00 |
| 99000457 | 2013<br>Furnace BH Inlet | Air | 1 | 2/12/99 12 00 AM | 2/15/99 9 44 AM | test_smv | | | 3/15/99 9 44 00 |
| 99000458 | 2018<br>Furnace BH Outlet | Air | 1 | 2/12/99 12 00 AM | 2/15/99 9 44 AM | test_smv | | | 3/15/99 9 44 00 |
| 99000459 | 1026<br>Train Rinses | Liquid | 1 | 2/2/99 12 00 AM | 2/15/99 9.44 AM | test_smv | | | 3/15/99 9.44 00 |
| 99000460 | 1027<br>Filter | Air | 1 | 2/2/99 12·00 AM | 2/15/99 9 44 AM | test_smv | | | |
| 99000461 | 1021<br>Methanol | Liquid | 1 | 2/2/99 12.00 AM | 2/15/99 9.44 AM | test_smv | | | 3/15/99 9:44 00 |
| 99000462 | 1022<br>Methylene Chloride | Liquid | 1 | 2/2/99 12 00 AM | 2/15/99 9 44 AM | test_smv | | | 3/15/99 9·44 00 |
| 99000463 | 1023<br>Filter | Air | 1 | 2/2/99 12.00 AM | 2/15/99 9.44 AM | test_smv | | | |
| 99000464 | 1025<br>ASTM Type II Water | Liquid | 1 | 2/2/99 12 00 AM | 2/15/99 9 44 AM | test_smv | | | 3/15/99 9 44 00 |

# Sample Master LIMS
# Sample Login Report

**Customer Name:** EPA / EMC Option 1

**Project ID:** 4951

**Order Comment:** Hand delivered to sample control by J. Surman 2/15/99.

**Order ID:** 990200012

**Order Date:** 2/16/99



| MRI Sample ID | Customer Sample ID | Matrix | Quantity | Date Collected | Date Received | Test | Test Group | Method | Due Date |
|---|---|---|---|---|---|---|---|---|---|
| 99000465 | 1001<br>M0020 Train Rinses | Liquid | 1 | 2/9/99 12 00 AM | 2/15/99 9 44 AM | test_smv | | | 3/15/99 9 44 00 |
| 99000466 | 1002<br>M0010 Filter | Air | 1 | 2/9/99 12 00 AM | 2/15/99 9 44 AM | test_smv | | | |
| 99000467 | 1004<br>M0010 Condensate | Liquid | 1 | 2/9/99 12 00 AM | 2/15/99 9 44 AM | test_smv | | | 3/15/99 9:44 00 |
| 99000468 | 2001<br>M0010 Train Rinses | Liquid | 1 | 2/9/99 12 00 AM | 2/15/99 9 44 AM | test_smv | | | 3/15/99 9 44:00 |
| 99000469 | 2002<br>M0010 Filter | Air | 1 | 2/9/99 12 00 AM | 2/15/99 9 44 AM | test_smv | | | |
| 99000470 | 2004<br>M0010 Condensate | Liquid | 1 | 2/9/99 12 00 AM | 2/15/99 9 44 AM | test_smv | | | 3/15/99 9 44 00 |
| 99000471 | 1011<br>M0010 Train Rinses | Liquid | 1 | 2/11/99 12 00 AM | 2/15/99 9 44 AM | test_smv | | | 3/15/99 9:44 00 |
| 99000472 | 1012<br>M0010 Filter | Air | 1 | 2/11/99 12 00 AM | 2/15/99 9 44 AM | test_smv | | | |
| 99000473 | 1014<br>M0010 Condensate | Liquid | 1 | 2/11/99 12 00 AM | 2/15/99 9 44 AM | test_smv | | | 3/15/99 9 44 00 |
| 99000474 | 2011<br>M0010 Train Rinses | Liquid | 1 | 2/12/99 12 00 AM | 2/15/99 9 44 AM | test_smv | | | 3/15/99 9 44 00 |
| 99000475 | 2012<br>M0010 Filter | Air | 1 | 2/12/99 12 00 AM | 2/15/99 9.44 AM | test_smv | | | |
| 99000476 | 2014<br>M0010 Condensate | Liquid | 1 | 2/12/99 12 00 AM | 2/15/99 9.44 AM | test_smv | | | 3/15/99 9 44:00 |
| 99000477 | 1006<br>M0010 Train Rinses | Liquid | 1 | 2/9/99 12 00 AM | 2/15/99 9 44 AM | test_smv | | | 3/15/99 9.44.00 |
| 99000478 | 1007<br>M0010 Filter | Air | 1 | 2/9/99 12 00 AM | 2/15/99 9 44 AM | test_smv | | | |
| 99000479 | 1009<br>M0010 Condensate | Liquid | 1 | 2/9/99 12 00 AM | 2/15/99 9 44 AM | test_smv | | | 3/15/99 9 44 00 |
| 99000480 | 2006<br>M0010 Train Rinses | Liquid | 1 | 2/9/99 12 00 AM | 2/15/99 9 44 AM | test_smv | | | 3/15/99 9 44 00 |

# Sample Master LIMS
## Sample Login Report

**Customer Name:** EPA / EMC Option 1 **Order ID:** 990200012

**Project ID:** 4951 **Order Date:** 2/16/99

**Order Comment:** Hand delivered to sample control by J. Surman 2/15/99. **Page:** 3 of 3

| MRI Sample ID | Customer Sample ID | Matrix | Quantity | Date Collected | Date Received | Test | Test Group | Method | Due Date |
|---|---|---|---|---|---|---|---|---|---|
| 99000481 | 2007<br>M0010 Filter | Air | .1 | 2/9/99 12 00 AM | 2/15/99 9 44 AM | test_smv | | | |
| 99000482 | 2009<br>M0010 Condensate | Liquid | 1 | 2/9/99 12 00 AM | 2/15/99 9 44 AM | test_smv | | | 3/15/99 9 44 00 |
| 99000483 | 1016<br>M0010 Train Rinses | Liquid | 1 | 2/11/99 12 00 AM | 2/15/99 9 44 AM | test_smv | | | 3/15/99 9 44 00 |
| 99000484 | 1017<br>M0010 Filter | Air | 1 | 2/11/99 12 00 AM | 2/15/99 9 44 AM | test_smv | | | |
| 99000485 | 1019<br>M0010 Condensate | Liquid | 1 | 2/11/99 12 00 AM | 2/15/99 9 44 AM | test_smv | | | 3/15/99 9 44 00 |
| 99000486 | 2016<br>M0010 Train Rinses | Liquid | 1 | 2/12/99 12 00 AM | 2/15/99 9 44 AM | test_smv | | | 3/15/99 9 44 00 |
| 99000487 | 2017<br>M0010 Filter | Air | 1 | 2/12/99 12 00 AM | 2/15/99 9 44 AM | test_smv | | | |
| 99000488 | 2019<br>M0010 Condensate | Liquid | 1 | 2/12/99 12 00 AM | 2/15/99 9 44 AM | test_smv | | | 3/15/99 9 44 00 |

## SAMPLE CONDITION RECORD

| | |
|---|---|
| Are samples submitted with a chain of custody? | Yes |
| Are the number of samples the same as stated on the chain of custody? | Yes |
| Are bottle caps tight and securely in place? | Yes |
| Were all containers intact when received? | Yes |
| Were samples submitted in an ice chest? | Yes |
| Were samples received cold? | Yes |
| Were samples within the holding time for the requested test(s)? | Yes |
| Is the volume of sample submitted sufficient for the requested test(s)? | Yes |
| Are all samples for volatile organic analyses free of headspace? | N/A |

02/18/99 M. Cheamy

# SAMPLE CONDITION AT RECEIVING LABORATORY

MRI Project No. 4951.03.04.01



Sample Type: Sample components recovered from M0010 sampling trains and field blank trains; and field reagent blank samples.

Target Analytes: POM and PAHs per Site-specific Test Plan and QAPP by Method 8270C. See analysis request memo from April Carender and Jim Surman.

Field Sample Condition Information Documented By J. Surman Date: 02/12/99

| Sample No. | Field Weight, grams, or Condition | Lab Weight, grams, or Condition | Comments | Received and Checked By | Date |
|---|---|---|---|---|---|
| 1001 | 1286.8 | 1286.84 | | Mike Cheany | 02/16/99 |
| 1002 | intact | intact | | | |
| 1003 | intact | intact | | | |
| 1004 | 811.3 | 811.12 | | | |
| 1006 | 1216.4 | 1216.54 | | | |
| 1007 | intact | intact | | | |
| 1008 | intact | intact | | | |
| 1009 | 785.0 | 784.94 | | | |
| 1021 | 891.3 | 891.34 | | | |
| 1022 | 1193.9 | 1193.93 | | | |
| 1023 | intact | intact | | | |
| 1024 | intact | intact | | | |
| 1025 | 956.7 | 956.72 | | | |
| 1026 | 1235.2 | 1235.79 | | | |
| 1027 | intact | intact | | | |
| 1028 | intact | intact | | | |
| 2001 | 1343.5 | 1343.54 | | | |
| 2002 | intact | intact | | | |
| 2003 | intact | intact | | | |
| 2004 | 794.7 | 794.57 | | | |
| 2006 | 1069.8 | 1070.01 | | | |
| 2007 | intact | intact | | | |
| 2008 | intact | intact | | | |
| 2009 | 779.5 | 779.58 | | Mike Cheany | 02/16/99 |
| 3001 | | | | | |
| 3002 | | | | | |
| 3003 | | | | | |
| 3004 | | | | | |
| 3006 | | | | | |
| 3007 | | | | | |
| 3008 | | | | | |

The purpose of this form is to document the condition and to verify the integrity of samples received by the analytical laboratory. The Field Laboratory Leader completes the first two columns with sample numbers and final gross field sample weights of liquid samples or the condition of other samples as applicable. The analytical laboratory sample custodian, the analytical coordinator, the analyst, or a designee observes all samples received, reweighs liquid samples that do not have contents level marks or that are suspect, notes the condition of other samples, and documents all observations on this form.

# SAMPLE CONDITION AT RECEIVING LABORATORY

MRI Project No. 4951.03.04.01



Sample Type: Sample components recovered from M0010 sampling trains and field blank trains; and field reagent blank samples.

Target Analytes: POM and PAHs per Site-specific Test Plan and QAPP by Method 8270C. See analysis request request from April Carender and Jim Surman.

Field Sample Condition Information Documented By J. Surman Date: 02/12/99

| Sample No. | Field Weight, grams, or Condition | Lab Weight, grams, or Condition | Comments | Received and Checked By | Date |
|---|---|---|---|---|---|
| ~~3009~~ | | | | Mike Cheeny | 02/16/99 |
| 1011 | 1368.1 | 1368.03 | | | |
| 1012 | intact | intact | | | |
| 1013 | intact | intact | | | |
| 1014 | 747.5 | 747.41 | | | |
| 1016 | 1103.6 | 1103.65 | | | |
| 1017 | intact | intact | | | |
| 1018 | intact | intact | | | |
| 1019 | 724.5 | 724.45 | | | |
| 2011 | 1245.6 | 1245.72 | | | |
| 2012 | intact | intact | | | |
| 2013 | intact | intact | | | |
| 2014 | 697.7 | 697.65 | | | |
| 2016 | 1303.9 | 1303.99 | | | |
| 2017 | intact | intact | | | |
| 2018 | intact | intact | | | |
| 2019 | 706.4 | 706.36 | | Mike Cheeny | 02/16/99 |
| 3011 | | | | | |
| 3012 | | | | | |
| 3013 | | | | | |
| 3014 | | | | | |
| 3016 | | | | | |
| 3017 | | | | | |
| 3018 | | | | | |
| 3019 | | | | | |

The purpose of this form is to document the condition and to verify the integrity of samples received by the analytical laboratory. The Field Laboratory Leader completes the first two columns with sample numbers and final gross field sample weights of liquid samples or the condition of other samples as applicable. The analytical laboratory sample custodian, the analytical coordinator, the analyst, or a designee observes all samples received, reweighs liquid samples that do not have contents level marks or that are suspect, notes the condition of other samples, and documents all observations on this form.

# Appendix B

# Sample Collection Data

FILE NAME - cdin1 PROG.=VER 06/09/89
RUN # - 1 - Method 0010 Train for POM & PAHs 02-17-1999 14:21:02
LOCATION - Chip Dryer Baghouse Inlet Duct
DATE - 02/09/99 Time:1015-1145/1215-1345
PROJECT # - 4951.03.04.01

| | | |
|---|---|---|
| Initial Meter Volume (Cubic Feet)= | 759.667 | |
| Final Meter Volume (Cubic Feet)= | 886.207 | |
| Meter Factor= | 1.038 | |
| Multiple leak checks, see end of printout | | Leak Correction= 0.0000 |
| Net Meter Volume (Cubic Feet)= | 131.349 | |
| Gas Volume (Dry Standard Cubic Feet)= | 128.727 | |
| Barometric Pressure (in Hg)= | 29.52 | |
| Static Pressure (Inches H20)= | -6.00 | |
| Percent Oxygen= | 19.4 | |
| Percent Carbon Dioxide= | 1.0 | |
| Moisture Collected (ml)= | 158.6 | |
| Percent Water= | 5.5 | |
| Average Meter Temperature (F)= | 74 | |
| Average Delta H (in H20)= | 1.74 | |
| Average Delta P (in H20)= | 1.735 | |
| Average Stack Temperature (F)= | 175 | |
| Dry Molecular Weight= | 28.94 | |
| Wet Molecular Weight= | 28.34 | |
| Average Square Root of Delta P (in H20)= | 1.3106 | |
| % Isokinetic= | 99.2 | |
| Pitot Coefficient= | 0.80 | |
| Sampling Time (Minutes)= | 180.0 | |
| Nozzle Diameter (Inches)= | 0.191 | |
| Stack Axis #1 (Inches)= | 17.8 | |
| Stack Axis #2 (Inches)= | 17.6 | |
| Circular Stack | | |
| Stack Area (Square Feet)= | 1.71 | |
| Stack Velocity (Actual, Feet/min)= | 4,744 | |
| Flow Rate (Actual, Cubic ft/min)= | 8,094 | |
| Flow rate (Standard, Wet, Cubic ft/min)= | 6,542 | |
| Flow Rate (Standard, Dry, Cubic ft/min)= | 6,183 | |

Particulate Loading - Front Half

| | | |
|---|---|---|
| Particulate Weight (g)= | 0.0000 | Corr. to 7% O2 & 12% CO2 |
| Particulate Loading, Dry Std. (gr/scf)= | 0.0000 | 0.0000 0.0000 |
| Particulate Loading, Actual (gr/cu ft)= | 0.0000 | |
| Emission Rate (lb/hr)= | 0.00 | |

No Back Half Analysis

* * METRIC UNITS * *

FILE NAME - cdin1
RUN # - 1 - Method 0010 Train for POM & PAHs
LOCATION - Chip Dryer Baghouse Inlet Duct
DATE - 02/09/99 Time:1015-1145/1215-1345
PROJECT # - 4951.03.04.01

PROG.=VER 06/09/89
02-17-1999 14:21:02

| | |
|---|---|
| Initial Meter Volume (Cubic Meters)= | 21.511 |
| Final Meter Volume (Cubic Meters)= | 25.094 |
| Meter Factor= | 1.038 |
| Multiple leak checks, see end of printout | Leak Correction= 0.0000 |
| Net Meter Volume (Cubic Meters)= | 3.719 |
| Gas Volume (Dry Standard Cubic Meters)= | 3.645 |
| Barometric Pressure (mm Hg)= | 750 |
| Static Pressure (mm H20)= | -152 |
| Percent Oxygen= | 19.4 |
| Percent Carbon Dioxide= | 1.0 |
| Moisture Collected (ml)= | 158.6 |
| Percent Water= | 5.5 |
| Average Meter Temperature (C)= | 23 |
| Average Delta H (mm H20)= | 44.3 |
| Average Delta P (mm H20)= | 44.1 |
| Average Stack Temperature (C)= | 79 |
| Dry Molecular Weight= | 28.94 |
| Wet Molecular Weight= | 28.34 |
| Average Square Root of Delta P (mm H20)= | 6.6051 |
| % Isokinetic= | 99.2 |
| Pitot Coefficient= | 0.80 |
| Sampling Time (Minutes)= | 180.0 |
| Nozzle Diameter (mm)= | 4.85 |
| Stack Axis #1 (Meters)= | 0.451 |
| Stack Axis #2 (Meters)= | 0.448 |
| Circular Stack | |
| Stack Area (Square Meters)= | 0.159 |
| Stack Velocity (Actual, m/min)= | 1,446 |
| Flow rate (Actual, Cubic m/min)= | 229 |
| Flow rate (Standard, Wet, Cubic m/min)= | 185 |
| Flow rate (Standard, Dry, Cubic m/min)= | 175 |

Particulate Loading - Front Half

| | | |
|---|---|---|
| Particulate Weight (g)= | 0.0000 | Corr. to 7% O2 & 12% CO2 |
| Particulate Loading, Dry Std. (mg/cu m)= | 0.0 | 0.0 0.0 |
| Particulate Loading, Actual (mg/cu m)= | 0.0 | |
| Emission Rate (kg/hr)= | 0.00 | |

No Back Half Analysis

FILE NAME - cdin1
RUN # - 1 - Method 0010 Train for POM & PAHs
LOCATION - Chip Dryer Baghouse Inlet Duct
DATE - 02/09/99 Time:1015-1145/1215-1345
PROJECT # - 4951.03.04.01

PROG.=VER 06/09/89
02-17-1999 14:21:03

| Point # | Delta P (in. H20) | Delta H (in. H20) | Stack T (F) | Meter T In(F) | Meter T Out(F) |
|---|---|---|---|---|---|
| 1 | 2.100 | 2.25 | 175 | 60 | 60 |
| 2 | 2.100 | 2.10 | 173 | 64 | 61 |
| 3 | 2.150 | 2.30 | 168 | 67 | 62 |
| 4 | 2.150 | 2.25 | 173 | 70 | 63 |
| 5 | 2.100 | 2.10 | 173 | 73 | 64 |
| 6 | 2.050 | 2.00 | 171 | 74 | 66 |
| 7 | 1.850 | 1.80 | 181 | 75 | 67 |
| 8 | 1.850 | 1.80 | 185 | 75 | 68 |
| 9 | 0.930 | 0.98 | 176 | 76 | 69 |
| 10 | 0.910 | 0.97 | 160 | 76 | 70 |
| 11 | 1.400 | 1.40 | 171 | 76 | 71 |
| 12 | 1.400 | 1.30 | 174 | 77 | 72 |
| 13 | 1.550 | 1.50 | 175 | 72 | 72 |
| 14 | 1.600 | 1.65 | 171 | 74 | 72 |
| 15 | 1.650 | 1.65 | 174 | 76 | 72 |
| 16 | 1.650 | 1.75 | 172 | 79 | 74 |
| 17 | 1.750 | 1.75 | 180 | 81 | 75 |
| 18 | 1.750 | 1.70 | 173 | 82 | 76 |
| 19 | 1.750 | 1.70 | 177 | 82 | 76 |
| 20 | 1.750 | 1.75 | 186 | 83 | 77 |
| 21 | 1.800 | 1.75 | 181 | 84 | 78 |
| 22 | 1.800 | 1.80 | 179 | 85 | 79 |
| 23 | 1.800 | 1.80 | 176 | 85 | 80 |
| 24 | 1.800 | 1.80 | 174 | 85 | 80 |

| Fraction | Final Wt. (g) | Tare Wt. (g) | Blank Wt. (g) | Net Wt. (g) |
|---|---|---|---|---|
| DRY CATCH | 0.0000 | 0.0000 | 0.0000 | 0.0000 |
| FILTER | 0.0000 | 0.0000 | 0.0000 | 0.0000 |

| Fraction | Final Wt. (g) | Tare Wt. (g) | Vol. (ml) | Net Wt. (g) |
|---|---|---|---|---|
| PROBE RINSE | 0.0000 | 0.0000 | 0.0 | 0.0000 |
| IMPINGERS | 0.0000 | 0.0000 | 0.0 | 0.0000 |

Probe Rinse Blank (mg/ml)= 0.0000
Impinger Blank (mg/ml)= 0.0000

Multiple leak checks used. Final readings for each segment are listed below

| Lk Rate (cfm) | Time (min) |
|---|---|
| 0.0030 | 90.0000 |
| 0.0030 | 90.0000 |

FILE NAME - cdout1
RUN # - 1 - Method 0010 Train for POM & PAHs
LOCATION - Chip Dryer Baghouse Outlet Stack
DATE - 02/09/99 Time:1015-1145/1215-1345
PROJECT # - 4951.03.04.01

PROG.=VER 06/09/89
02-17-1999 14:22:10

| | |
|---|---|
| Initial Meter Volume (Cubic Feet)= | 239.038 |
| Final Meter Volume (Cubic Feet)= | 340.479 |
| Meter Factor= | 1.019 |
| Multiple leak checks, see end of printout | |
| Net Meter Volume (Cubic Feet)= | 103.368 |
| Gas Volume (Dry Standard Cubic Feet)= | 101.049 |
| Barometric Pressure (in Hg)= | 29.52 |
| Static Pressure (Inches H20)= | -0.70 |
| Percent Oxygen= | 19.6 |
| Percent Carbon Dioxide= | 0.9 |
| Moisture Collected (ml)= | 116.8 |
| Percent Water= | 5.2 |
| Average Meter Temperature (F)= | 75 |
| Average Delta H (in H20)= | 1.54 |
| Average Delta P (in H20)= | 0.538 |
| Average Stack Temperature (F)= | 163 |
| Dry Molecular Weight= | 28.93 |
| Wet Molecular Weight= | 28.36 |
| Average Square Root of Delta P (in H20)= | 0.6426 |
| % Isokinetic= | 102.6 |
| Pitot Coefficient= | 0.81 |
| Sampling Time (Minutes)= | 180.0 |
| Nozzle Diameter (Inches)= | 0.234 |
| Stack Axis #1 (Inches)= | 22.8 |
| Stack Axis #2 (Inches)= | 24.3 |
| Circular Stack | |
| Stack Area (Square Feet)= | 3.01 |
| Stack Velocity (Actual, Feet/min)= | 2,317 |
| Flow Rate (Actual, Cubic ft/min)= | 6,972 |
| Flow rate (Standard, Wet, Cubic ft/min)= | 5,816 |
| Flow Rate (Standard, Dry, Cubic ft/min)= | 5,516 |

Leak Correction= 0.0000

Particulate Loading - Front Half

| | | Corr. to 7% O2 | & 12% CO. |
|---|---|---|---|
| Particulate Weight (g)= | 0.0000 | | |
| Particulate Loading, Dry Std. (gr/scf)= | 0.0000 | 0.0000 | 0.0000 |
| Particulate Loading, Actual (gr/cu ft)= | 0.0000 | | |
| Emission Rate (lb/hr)= | 0.00 | | |

No Back Half Analysis

* * METRIC UNITS * *

FILE NAME - cdout1
RUN # - 1 - Method 0010 Train for POM & PAHs
LOCATION - Chip Dryer Baghouse Outlet Stack
DATE - 02/09/99 Time:1015-1145/1215-1345
PROJECT # - 4951.03.04.01

PROG.=VER 06/09/89
02-17-1999 14:22:10

| | |
|---|---|
| Initial Meter Volume (Cubic Meters)= | 6.769 |
| Final Meter Volume (Cubic Meters)= | 9.641 |
| Meter Factor= | 1.019 |
| Multiple leak checks, see end of printout | Leak Correction= 0.0000 |
| Net Meter Volume (Cubic Meters)= | 2.927 |
| Gas Volume (Dry Standard Cubic Meters)= | 2.861 |
| Barometric Pressure (mm Hg)= | 750 |
| Static Pressure (mm H20)= | -18 |
| Percent Oxygen= | 19.6 |
| Percent Carbon Dioxide= | 0.9 |
| Moisture Collected (ml)= | 116.8 |
| Percent Water= | 5.2 |
| Average Meter Temperature (C)= | 24 |
| Average Delta H (mm H20)= | 39.1 |
| Average Delta P (mm H20)= | 13.7 |
| Average Stack Temperature (C)= | 73 |
| Dry Molecular Weight= | 28.93 |
| Wet Molecular Weight= | 28.36 |
| Average Square Root of Delta P (mm H20)= | 3.2387 |
| % Isokinetic= | 102.6 |
| Pitot Coefficient= | 0.81 |
| Sampling Time (Minutes)= | 180.0 |
| Nozzle Diameter (mm)= | 5.94 |
| Stack Axis #1 (Meters)= | 0.578 |
| Stack Axis #2 (Meters)= | 0.616 |
| Circular Stack | |
| Stack Area (Square Meters)= | 0.280 |
| Stack Velocity (Actual, m/min)= | 706 |
| Flow rate (Actual, Cubic m/min)= | 197 |
| Flow rate (Standard, Wet, Cubic m/min)= | 165 |
| Flow rate (Standard, Dry, Cubic m/min)= | 156 |

Particulate Loading - Front Half

| | | Corr. to 7% O2 | & 12% CO2 |
|---|---|---|---|
| Particulate Weight (g)= | 0.0000 | | |
| Particulate Loading, Dry Std. (mg/cu m)= | 0.0 | 0.0 | 0.0 |
| Particulate Loading, Actual (mg/cu m)= | 0.0 | | |
| Emission Rate (kg/hr)= | 0.00 | | |

No Back Half Analysis

FILE NAME - cdout1
RUN # - 1 - Method 0010 Train for POM & PAHs
LOCATION - Chip Dryer Baghouse Outlet Stack
DATE - 02/09/99 Time:1015-1145/1215-1345
PROJECT # - 4951.03.04.01

PROG.=VER 06/09/89
02-17-1999 14:22:11

| Point # | Delta P (in. H20) | Delta H (in. H20) | Stack T (F) | Meter T In(F) | Meter T Out(F) |
|---|---|---|---|---|---|
| 1 | 0.110 | 0.32 | 133 | 60 | 60 |
| 2 | 0.110 | 0.31 | 156 | 62 | 61 |
| 3 | 0.080 | 0.22 | 157 | 64 | 62 |
| 4 | 0.170 | 0.47 | 159 | 65 | 63 |
| 5 | 0.050 | 0.14 | 160 | 68 | 64 |
| 6 | 0.050 | 0.14 | 160 | 68 | 65 |
| 7 | 0.080 | 0.22 | 164 | 69 | 67 |
| 8 | 0.330 | 0.92 | 167 | 71 | 68 |
| 9 | 0.740 | 2.10 | 167 | 74 | 69 |
| 10 | 1.200 | 3.40 | 165 | 80 | 70 |
| 11 | 1.500 | 4.30 | 168 | 83 | 72 |
| 12 | 1.600 | 4.60 | 167 | 87 | 74 |
| 13 | 0.550 | 1.60 | 152 | 74 | 74 |
| 14 | 0.420 | 1.20 | 163 | 77 | 74 |
| 15 | 0.370 | 1.05 | 164 | 80 | 75 |
| 16 | 0.130 | 0.37 | 166 | 83 | 77 |
| 17 | 0.060 | 0.17 | 169 | 82 | 78 |
| 18 | 0.060 | 0.17 | 169 | 82 | 79 |
| 19 | 0.190 | 0.54 | 169 | 81 | 79 |
| 20 | 0.700 | 2.00 | 171 | 84 | 81 |
| 21 | 0.910 | 2.60 | 171 | 86 | 81 |
| 22 | 1.100 | 3.20 | 169 | 89 | 82 |
| 23 | 1.200 | 3.50 | 168 | 89 | 82 |
| 24 | 1.200 | 3.40 | 167 | 90 | 82 |

| Fraction | Final Wt. (g) | Tare Wt. (g) | Blank Wt. (g) | Net Wt. (g) |
|---|---|---|---|---|
| DRY CATCH | 0.0000 | 0.0000 | 0.0000 | 0.0000 |
| FILTER | 0.0000 | 0.0000 | 0.0000 | 0.0000 |

| Fraction | Final Wt. (g) | Tare Wt. (g) | Vol. (ml) | Net Wt. (g) |
|---|---|---|---|---|
| PROBE RINSE | 0.0000 | 0.0000 | 0.0 | 0.0000 |
| IMPINGERS | 0.0000 | 0.0000 | 0.0 | 0.0000 |

Probe Rinse Blank (mg/ml)= 0.0000
Impinger Blank (mg/ml)= 0.0000

Multiple leak checks used. Final readings for each segment are listed below

| Lk Rate (cfm) | Time (min) |
|---|---|
| 0.0020 | 90.0000 |
| 0.0010 | 90.0000 |

FILE NAME - cdin2
RUN # - 2 - Method 0010 Train for POM & PAHs
LOCATION - Chip Dryer Baghouse Inlet Duct
DATE - 02/09/99 Time:1545-1715/1745-1915
PROJECT # - 4951.03.04.01

PROG.=VER 06/09/89
02-17-1999 14:23:22

| | |
|---|---|
| Initial Meter Volume (Cubic Feet)= | 887.007 |
| Final Meter Volume (Cubic Feet)= | 1004.573 |
| Meter Factor= | 1.038 |
| Multiple leak checks, see end of printout | Leak Correction= 0.0000 |
| Net Meter Volume (Cubic Feet)= | 122.033 |
| Gas Volume (Dry Standard Cubic Feet)= | 117.791 |
| Barometric Pressure (in Hg)= | 29.46 |
| Static Pressure (Inches H20)= | -6.00 |
| Percent Oxygen= | 19.4 |
| Percent Carbon Dioxide= | 1.0 |
| Moisture Collected (ml)= | 127.0 |
| Percent Water= | 4.8 |
| Average Meter Temperature (F)= | 80 |
| Average Delta H (in H20)= | 1.49 |
| Average Delta P (in H20)= | 1.440 |
| Average Stack Temperature (F)= | 169 |
| Dry Molecular Weight= | 28.94 |
| Wet Molecular Weight= | 28.41 |
| Average Square Root of Delta P (in H20)= | 1.1980 |
| % Isokinetic= | 98.4 |
| Pitot Coefficient= | 0.80 |
| Sampling Time (Minutes)= | 180.0 |
| Nozzle Diameter (Inches)= | 0.191 |
| Stack Axis #1 (Inches)= | 17.8 |
| Stack Axis #2 (Inches)= | 17.6 |
| Circular Stack | |
| Stack Area (Square Feet)= | 1.71 |
| Stack Velocity (Actual, Feet/min)= | 4,316 |
| Flow Rate (Actual, Cubic ft/min)= | 7,365 |
| Flow rate (Standard, Wet, Cubic ft/min)= | 5,994 |
| Flow Rate (Standard, Dry, Cubic ft/min)= | 5,704 |

Particulate Loading - Front Half

| | | Corr. to 7% O2 | & 12% CO2 |
|---|---|---|---|
| Particulate Weight (g)= | 0.0000 | | |
| Particulate Loading, Dry Std. (gr/scf)= | 0.0000 | 0.0000 | 0.0000 |
| Particulate Loading, Actual (gr/cu ft)= | 0.0000 | | |
| Emission Rate (lb/hr)= | 0.00 | | |

No Back Half Analysis

* * METRIC UNITS * *

FILE NAME - cdin2 PROG.=VER 06/09/89
RUN # - 2 - Method 0010 Train for POM & PAHs 02-17-1999 14:23:23
LOCATION - Chip Dryer Baghouse Inlet Duct
DATE - 02/09/99 Time:1545-1715/1745-1915
PROJECT # - 4951.03.04.01

| | | |
|---|---|---|
| Initial Meter Volume (Cubic Meters)= | 25.116 | |
| Final Meter Volume (Cubic Meters)= | 28.445 | |
| Meter Factor= | 1.038 | |
| Multiple leak checks, see end of printout | | Leak Correction= 0.0000 |
| Net Meter Volume (Cubic Meters)= | 3.456 | |
| Gas Volume (Dry Standard Cubic Meters)= | 3.335 | |
| Barometric Pressure (mm Hg)= | 748 | |
| Static Pressure (mm H20)= | -152 | |
| Percent Oxygen= | 19.4 | |
| Percent Carbon Dioxide= | 1.0 | |
| Moisture Collected (ml)= | 127.0 | |
| Percent Water= | 4.8 | |
| Average Meter Temperature (C)= | 27 | |
| Average Delta H (mm H20)= | 37.9 | |
| Average Delta P (mm H20)= | 36.6 | |
| Average Stack Temperature (C)= | 76 | |
| Dry Molecular Weight= | 28.94 | |
| Wet Molecular Weight= | 28.41 | |
| Average Square Root of Delta P (mm H20)= | 6.0379 | |
| % Isokinetic= | 98.4 | |
| Pitot Coefficient= | 0.80 | |
| Sampling Time (Minutes)= | 180.0 | |
| Nozzle Diameter (mm)= | 4.85 | |
| Stack Axis #1 (Meters)= | 0.451 | |
| Stack Axis #2 (Meters)= | 0.448 | |
| Circular Stack | | |
| Stack Area (Square Meters)= | 0.159 | |
| Stack Velocity (Actual, m/min)= | 1,316 | |
| Flow rate (Actual, Cubic m/min)= | 209 | |
| Flow rate (Standard, Wet, Cubic m/min)= | 170 | |
| Flow rate (Standard, Dry, Cubic m/min)= | 162 | |

Particulate Loading - Front Half

| | | |
|---|---|---|
| Particulate Weight (g)= | 0.0000 | Corr. to 7% O2 & 12% CO |
| Particulate Loading, Dry Std. (mg/cu m)= | 0.0 | 0.0 0.0 |
| Particulate Loading, Actual (mg/cu m)= | 0.0 | |
| Emission Rate (kg/hr)= | 0.00 | |

No Back Half Analysis

FILE NAME - cdin2 PROG.=VER 06/09/89
RUN # - 2 - Method 0010 Train for POM & PAHs 02-17-1999 14:23:23
LOCATION - Chip Dryer Baghouse Inlet Duct
DATE - 02/09/99 Time:1545-1715/1745-1915
PROJECT # - 4951.03.04.01

| Point # | Delta P (in. H20) | Delta H (in. H20) | Stack T (F) | Meter T In(F) | Meter T Out(F) |
|---|---|---|---|---|---|
| 1 | 1.600 | 1.65 | 180 | 77 | 77 |
| 2 | 1.600 | 1.60 | 176 | 78 | 77 |
| 3 | 1.650 | 1.65 | 175 | 80 | 77 |
| 4 | 1.650 | 1.60 | 177 | 82 | 78 |
| 5 | 1.550 | 1.60 | 175 | 83 | 78 |
| 6 | 1.550 | 1.65 | 177 | 84 | 79 |
| 7 | 1.450 | 1.55 | 173 | 85 | 80 |
| 8 | 1.450 | 1.50 | 172 | 85 | 80 |
| 9 | 1.300 | 1.40 | 172 | 85 | 80 |
| 10 | 1.300 | 1.35 | 172 | 86 | 81 |
| 11 | 1.200 | 1.30 | 170 | 86 | 81 |
| 12 | 1.200 | 1.30 | 171 | 86 | 81 |
| 13 | 1.150 | 1.20 | 163 | 79 | 79 |
| 14 | 1.150 | 1.20 | 163 | 78 | 78 |
| 15 | 1.300 | 1.35 | 163 | 80 | 78 |
| 16 | 1.350 | 1.35 | 164 | 81 | 78 |
| 17 | 1.450 | 1.50 | 163 | 81 | 78 |
| 18 | 1.450 | 1.50 | 163 | 82 | 78 |
| 19 | 1.500 | 1.55 | 162 | 83 | 78 |
| 20 | 1.500 | 1.60 | 165 | 83 | 78 |
| 21 | 1.550 | 1.60 | 166 | 83 | 78 |
| 22 | 1.550 | 1.60 | 167 | 83 | 78 |
| 23 | 1.550 | 1.60 | 167 | 82 | 77 |
| 24 | 1.550 | 1.60 | 166 | 82 | 78 |

| Fraction | Final Wt. (g) | Tare Wt. (g) | Blank Wt. (g) | Net Wt. (g) |
|---|---|---|---|---|
| DRY CATCH | 0.0000 | 0.0000 | 0.0000 | 0.0000 |
| FILTER | 0.0000 | 0.0000 | 0.0000 | 0.0000 |

| Fraction | Final Wt. (g) | Tare Wt. (g) | Vol. (ml) | Net Wt. (g) |
|---|---|---|---|---|
| PROBE RINSE | 0.0000 | 0.0000 | 0.0 | 0.0000 |
| IMPINGERS | 0.0000 | 0.0000 | 0.0 | 0.0000 |

Probe Rinse Blank (mg/ml) = 0.0000
Impinger Blank (mg/ml) = 0.0000

Multiple leak checks used. Final readings for each segment are listed below

| Lk Rate (cfm) | Time (min) |
|---|---|
| 0.0010 | 90.0000 |
| 0.0020 | 90.0000 |

FILE NAME - cdout2
RUN # - 2 - Method 0010 Train for POM & PAHs
LOCATION - Chip Dryer Baghouse Outlet Stack
DATE - 02/09/99 Time:1545-1715/1745-1915
PROJECT # - 4951.03.04.01

PROG.=VER 06/09/89
02-17-1999 14:24:08

| | |
|---|---|
| Initial Meter Volume (Cubic Feet)= | 341.212 |
| Final Meter Volume (Cubic Feet)= | 437.965 |
| Meter Factor= | 1.019 |
| Multiple leak checks, see end of printout | Leak Correction= 0.0000 |
| Net Meter Volume (Cubic Feet)= | 98.591 |
| Gas Volume (Dry Standard Cubic Feet)= | 95.091 |
| Barometric Pressure (in Hg)= | 29.46 |
| Static Pressure (Inches H20)= | -0.70 |
| Percent Oxygen= | 19.6 |
| Percent Carbon Dioxide= | 0.9 |
| Moisture Collected (ml)= | 112.1 |
| Percent Water= | 5.3 |
| Average Meter Temperature (F)= | 81 |
| Average Delta H (in H20)= | 1.37 |
| Average Delta P (in H20)= | 0.473 |
| Average Stack Temperature (F)= | 161 |
| Dry Molecular Weight= | 28.93 |
| Wet Molecular Weight= | 28.35 |
| Average Square Root of Delta P (in H20)= | 0.6052 |
| % Isokinetic= | 102.4 |
| Pitot Coefficient= | 0.81 |
| Sampling Time (Minutes)= | 180.0 |
| Nozzle Diameter (Inches)= | 0.234 |
| Stack Axis #1 (Inches)= | 22.8 |
| Stack Axis #2 (Inches)= | 24.3 |
| Circular Stack | |
| Stack Area (Square Feet)= | 3.01 |
| Stack Velocity (Actual, Feet/min)= | 2,180 |
| Flow Rate (Actual, Cubic ft/min)= | 6,559 |
| Flow rate (Standard, Wet, Cubic ft/min)= | 5,485 |
| Flow Rate (Standard, Dry, Cubic ft/min)= | 5,196 |

Particulate Loading - Front Half

| | | Corr. to 7% O2 | & 12% CO |
|---|---|---|---|
| Particulate Weight (g)= | 0.0000 | | |
| Particulate Loading, Dry Std. (gr/scf)= | 0.0000 | 0.0000 | 0.0000 |
| Particulate Loading, Actual (gr/cu ft)= | 0.0000 | | |
| Emission Rate (lb/hr)= | 0.00 | | |

No Back Half Analysis

* * METRIC UNITS * *

FILE NAME - cdout2
RUN # - 2 - Method 0010 Train for POM & PAHs
LOCATION - Chip Dryer Baghouse Outlet Stack
DATE - 02/09/99 Time:1545-1715/1745-1915
PROJECT # - 4951.03.04.01

PROG.=VER 06/09/89
02-17-1999 14:24:08

| | |
|---|---|
| Initial Meter Volume (Cubic Meters)= | 9.662 |
| Final Meter Volume (Cubic Meters)= | 12.401 |
| Meter Factor= | 1.019 |
| Multiple leak checks, see end of printout | Leak Correction= 0.0000 |
| Net Meter Volume (Cubic Meters)= | 2.792 |
| Gas Volume (Dry Standard Cubic Meters)= | 2.693 |
| Barometric Pressure (mm Hg)= | 748 |
| Static Pressure (mm H20)= | -18 |
| Percent Oxygen= | 19.6 |
| Percent Carbon Dioxide= | 0.9 |
| Moisture Collected (ml)= | 112.1 |
| Percent Water= | 5.3 |
| Average Meter Temperature (C)= | 27 |
| Average Delta H (mm H20)= | 34.8 |
| Average Delta P (mm H20)= | 12.0 |
| Average Stack Temperature (C)= | 71 |
| Dry Molecular Weight= | 28.93 |
| Wet Molecular Weight= | 28.35 |
| Average Square Root of Delta P (mm H20)= | 3.0501 |
| % Isokinetic= | 102.4 |
| Pitot Coefficient= | 0.81 |
| Sampling Time (Minutes)= | 180.0 |
| Nozzle Diameter (mm)= | 5.94 |
| Stack Axis #1 (Meters)= | 0.578 |
| Stack Axis #2 (Meters)= | 0.616 |
| Circular Stack | |
| Stack Area (Square Meters)= | 0.280 |
| Stack Velocity (Actual, m/min)= | 664 |
| Flow rate (Actual, Cubic m/min)= | 186 |
| Flow rate (Standard, Wet, Cubic m/min)= | 155 |
| Flow rate (Standard, Dry, Cubic m/min)= | 147 |

Particulate Loading - Front Half

| | | Corr. to 7% O2 | & 12% CO2 |
|---|---|---|---|
| Particulate Weight (g)= | 0.0000 | | |
| Particulate Loading, Dry Std. (mg/cu m)= | 0.0 | 0.0 | 0.0 |
| Particulate Loading, Actual (mg/cu m)= | 0.0 | | |
| Emission Rate (kg/hr)= | 0.00 | | |

No Back Half Analysis

FILE NAME - cdout2
RUN # - 2 - Method 0010 Train for POM & PAHs
LOCATION - Chip Dryer Baghouse Outlet Stack
DATE - 02/09/99 Time:1545-1715/1745-1915
PROJECT # - 4951.03.04.01

PROG.=VER 06/09/89
02-17-1999 14:24:09

| Point # | Delta P (in. H20) | Delta H (in. H20) | Stack T (F) | Meter T In(F) | Meter T Out(F) |
|---|---|---|---|---|---|
| 1 | 0.090 | 0.25 | 166 | 79 | 79 |
| 2 | 0.070 | 0.20 | 163 | 79 | 79 |
| 3 | 0.060 | 0.17 | 165 | 79 | 79 |
| 4 | 0.040 | 0.11 | 166 | 80 | 79 |
| 5 | 0.030 | 0.08 | 165 | 80 | 79 |
| 6 | 0.050 | 0.14 | 164 | 80 | 79 |
| 7 | 0.230 | 0.66 | 164 | 81 | 80 |
| 8 | 0.600 | 1.70 | 164 | 82 | 80 |
| 9 | 0.830 | 2.40 | 165 | 86 | 81 |
| 10 | 1.100 | 3.20 | 165 | 90 | 81 |
| 11 | 1.300 | 3.80 | 165 | 92 | 82 |
| 12 | 1.300 | 3.80 | 164 | 93 | 83 |
| 13 | 0.410 | 1.20 | 156 | 80 | 80 |
| 14 | 0.350 | 1.00 | 157 | 79 | 78 |
| 15 | 0.230 | 0.66 | 157 | 81 | 78 |
| 16 | 0.050 | 0.14 | 157 | 81 | 78 |
| 17 | 0.050 | 0.14 | 157 | 79 | 78 |
| 18 | 0.270 | 0.78 | 156 | 78 | 78 |
| 19 | 0.300 | 0.86 | 158 | 79 | 77 |
| 20 | 0.480 | 1.40 | 157 | 80 | 77 |
| 21 | 0.550 | 1.60 | 157 | 82 | 78 |
| 22 | 0.750 | 2.20 | 157 | 83 | 78 |
| 23 | 1.100 | 3.20 | 156 | 85 | 78 |
| 24 | 1.100 | 3.20 | 155 | 86 | 78 |

| Fraction | Final Wt. (g) | Tare Wt. (g) | Blank Wt. (g) | Net Wt. (g) |
|---|---|---|---|---|
| DRY CATCH | 0.0000 | 0.0000 | 0.0000 | 0.0000 |
| FILTER | 0.0000 | 0.0000 | 0.0000 | 0.0000 |

| Fraction | Final Wt. (g) | Tare Wt. (g) | Vol. (ml) | Net Wt. (g) |
|---|---|---|---|---|
| PROBE RINSE | 0.0000 | 0.0000 | 0.0 | 0.0000 |
| IMPINGERS | 0.0000 | 0.0000 | 0.0 | 0.0000 |

Probe Rinse Blank (mg/ml)= 0.0000
Impinger Blank (mg/ml)= 0.0000

Multiple leak checks used. Final readings for each segment are listed below

| Lk Rate (cfm) | Time (min) |
|---|---|
| 0.0060 | 90.0000 |
| 0.0040 | 90.0000 |

FILE NAME - rfin1 PROG.=VER 06/09/89
RUN # - 1 - Method 0010 Train for POM & PAHs 02-17-1999 14:25:16
LOCATION - Reverberatory Furnace #1 Baghouse Inlet Duct
DATE - 02/11/99 Time:1130-1400/1415-1645/1715-1945/1955-2345
PROJECT # - 4951.03.04.01

| | | |
|---|---|---|
| Initial Meter Volume (Cubic Feet)= | 335.267 | |
| Final Meter Volume (Cubic Feet)= | 557.120 | |
| Meter Factor= | 0.985 | |
| Multiple leak checks, see end of printout | | Leak Correction= 0.0000 |
| Net Meter Volume (Cubic Feet)= | 218.525 | |
| Gas Volume (Dry Standard Cubic Feet)= | 211.180 | |
| Barometric Pressure (in Hg)= | 29.61 | |
| Static Pressure (Inches H20)= | -1.70 | |
| Percent Oxygen= | 20.9 | |
| Percent Carbon Dioxide= | 0.2 | |
| Moisture Collected (ml)= | 100.2 | |
| Percent Water= | 2.2 | |
| Average Meter Temperature (F)= | 81 | |
| Average Delta H (in H20)= | 0.32 | |
| Average Delta P (in H20)= | 0.760 | |
| Average Stack Temperature (F)= | 138 | |
| Dry Molecular Weight= | 28.87 | |
| Wet Molecular Weight= | 28.63 | |
| Average Square Root of Delta P (in H20)= | 0.8712 | |
| % Isokinetic= | 99.6 | |
| Pitot Coefficient= | 0.83 | |
| Sampling Time (Minutes)= | 680.0 | |
| Nozzle Diameter (Inches)= | 0.147 | |
| Stack Axis #1 (Inches)= | 36.5 | |
| Stack Axis #2 (Inches)= | 38.2 | |
| Circular Stack | | |
| Stack Area (Square Feet)= | 7.60 | |
| Stack Velocity (Actual, Feet/min)= | 3,111 | |
| Flow Rate (Actual, Cubic ft/min)= | 23,647 | |
| Flow rate (Standard, Wet, Cubic ft/min)= | 20,569 | |
| Flow Rate (Standard, Dry, Cubic ft/min)= | 20,119 | |

Particulate Loading - Front Half

| | | |
|---|---|---|
| Particulate Weight (g)= | 0.0000 | Corr. to 7% O2 & 12% CO2 |
| Particulate Loading, Dry Std. (gr/scf)= | 0.0000 | 0.0000 0.0000 |
| Particulate Loading, Actual (gr/cu ft)= | 0.0000 | |
| Emission Rate (lb/hr)= | 0.00 | |

No Back Half Analysis

* * METRIC UNITS * *

FILE NAME - rfin1 PROG.=VER 06/09/89
RUN # - 1 - Method 0010 Train for POM & PAHs 02-17-1999 14:25:17
LOCATION - Reverberatory Furnace #1 Baghouse Inlet Duct
DATE - 02/11/99 Time:1130-1400/1415-1645/1715-1945/1955-2345
PROJECT # - 4951.03.04.01

| | | |
|---|---|---|
| Initial Meter Volume (Cubic Meters)= | 9.493 | |
| Final Meter Volume (Cubic Meters)= | 15.775 | |
| Meter Factor= | 0.985 | |
| Multiple leak checks, see end of printout | | Leak Correction= 0.0000 |
| Net Meter Volume (Cubic Meters)= | 6.188 | |
| Gas Volume (Dry Standard Cubic Meters)= | 5.980 | |
| Barometric Pressure (mm Hg)= | 752 | |
| Static Pressure (mm H20)= | -43 | |
| Percent Oxygen= | 20.9 | |
| Percent Carbon Dioxide= | 0.2 | |
| Moisture Collected (ml)= | 100.2 | |
| Percent Water= | 2.2 | |
| Average Meter Temperature (C)= | 27 | |
| Average Delta H (mm H20)= | 8.0 | |
| Average Delta P (mm H20)= | 19.3 | |
| Average Stack Temperature (C)= | 59 | |
| Dry Molecular Weight= | 28.87 | |
| Wet Molecular Weight= | 28.63 | |
| Average Square Root of Delta P (mm H20)= | 4.3907 | |
| % Isokinetic= | 99.6 | |
| Pitot Coefficient= | 0.83 | |
| Sampling Time (Minutes)= | 680.0 | |
| Nozzle Diameter (mm)= | 3.73 | |
| Stack Axis #1 (Meters)= | 0.927 | |
| Stack Axis #2 (Meters)= | 0.970 | |
| Circular Stack | | |
| Stack Area (Square Meters)= | 0.706 | |
| Stack Velocity (Actual, m/min)= | 948 | |
| Flow rate (Actual, Cubic m/min)= | 670 | |
| Flow rate (Standard, Wet, Cubic m/min)= | 582 | |
| Flow rate (Standard, Dry, Cubic m/min)= | 570 | |

Particulate Loading - Front Half

| | | | |
|---|---|---|---|
| Particulate Weight (g)= | 0.0000 | Corr. to 7% O2 & 12% CO2 | |
| Particulate Loading, Dry Std. (mg/cu m)= | 0.0 | 0.0 | 0.0 |
| Particulate Loading, Actual (mg/cu m)= | 0.0 | | |
| Emission Rate (kg/hr)= | 0.00 | | |

No Back Half Analysis

FILE NAME - rfin1 PROG.=VER 06/09/89
RUN # - 1 - Method 0010 Train for POM & PAHs 02-17-1999 14:25:17
LOCATION - Reverberatory Furnace #1 Baghouse Inlet Duct
DATE - 02/11/99 Time:1130-1400/1415-1645/1715-1945/1955-2345
PROJECT # - 4951.03.04.01

| Point # | Delta P (in. H20) | Delta H (in. H20) | Stack T (F) | Meter T In(F) | Meter T Out(F) |
|---|---|---|---|---|---|
| 1 | 0.750 | 0.36 | 140 | 70 | 69 |
| 2 | 0.860 | 0.40 | 145 | 75 | 71 |
| 3 | 0.750 | 0.30 | 200 | 77 | 73 |
| 4 | 0.800 | 0.31 | 200 | 79 | 75 |
| 5 | 0.750 | 0.30 | 175 | 80 | 77 |
| 6 | 0.800 | 0.33 | 150 | 83 | 79 |
| 7 | 0.800 | 0.30 | 150 | 84 | 80 |
| 8 | 0.750 | 0.28 | 160 | 82 | 80 |
| 9 | 0.800 | 0.30 | 175 | 84 | 81 |
| 10 | 0.800 | 0.28 | 150 | 84 | 82 |
| 11 | 0.800 | 0.30 | 150 | 85 | 83 |
| 12 | 0.900 | 0.42 | 115 | 85 | 83 |
| 13 | 0.900 | 0.37 | 130 | 84 | 82 |
| 14 | 0.850 | 0.34 | 140 | 84 | 81 |
| 15 | 0.850 | 0.30 | 200 | 83 | 81 |
| 16 | 0.850 | 0.30 | 250 | 81 | 80 |
| 17 | 0.800 | 0.25 | 275 | 82 | 81 |
| 18 | 0.800 | 0.25 | 250 | 81 | 80 |
| 19 | 0.800 | 0.28 | 200 | 81 | 79 |
| 20 | 0.850 | 0.40 | 120 | 82 | 80 |
| 21 | 0.720 | 0.27 | 125 | 83 | 80 |
| 22 | 0.720 | 0.28 | 125 | 84 | 82 |
| 23 | 0.740 | 0.30 | 145 | 86 | 84 |
| 24 | 0.740 | 0.33 | 125 | 86 | 84 |
| 25 | 0.740 | 0.28 | 175 | 86 | 84 |
| 26 | 0.750 | 0.31 | 175 | 86 | 84 |
| 27 | 0.620 | 0.28 | 130 | 85 | 84 |
| 28 | 0.650 | 0.26 | 150 | 84 | 83 |
| 29 | 0.620 | 0.21 | 200 | 83 | 82 |
| 30 | 0.620 | 0.25 | 130 | 84 | 82 |
| 31 | 0.650 | 0.26 | 120 | 80 | 79 |
| 32 | 0.650 | 0.28 | 120 | 79 | 79 |
| 33 | 0.670 | 0.31 | 110 | 80 | 79 |
| 34 | 0.670 | 0.29 | 110 | 81 | 80 |
| 35 | 0.670 | 0.28 | 110 | 82 | 80 |
| 36 | 0.800 | 0.30 | 200 | 82 | 81 |
| 37 | 0.750 | 0.34 | 120 | 83 | 82 |
| 38 | 0.680 | 0.29 | 165 | 84 | 83 |
| 39 | 0.700 | 0.30 | 120 | 84 | 83 |
| 40 | 0.750 | 0.31 | 115 | 83 | 82 |

FILE NAME - rfin1 PROG.=VER 06/09/89
RUN # - 1 - Method 0010 Train for POM & PAHs 02-17-1999 14:25:18
LOCATION - Reverberatory Furnace #1 Baghouse Inlet Duct
DATE - 02/11/99 Time:1130-1400/1415-1645/1715-1945/1955-2345
PROJECT # - 4951.03.04.01

| | | | | | |
|---|---|---|---|---|---|
| 41 | 0.730 | 0.30 | 125 | 82 | 82 |
| 42 | 0.750 | 0.30 | 150 | 82 | 82 |
| 43 | 0.750 | 0.31 | 150 | 82 | 81 |
| 44 | 0.780 | 0.31 | 175 | 82 | 81 |
| 45 | 0.750 | 0.32 | 135 | 81 | 81 |
| 46 | 0.820 | 0.38 | 108 | 80 | 80 |
| 47 | 0.820 | 0.36 | 108 | 80 | 80 |
| 48 | 0.840 | 0.36 | 102 | 79 | 79 |
| 49 | 0.840 | 0.36 | 102 | 80 | 79 |
| 50 | 0.820 | 0.36 | 105 | 81 | 80 |
| 51 | 0.820 | 0.37 | 105 | 81 | 80 |
| 52 | 0.750 | 0.34 | 107 | 81 | 80 |
| 53 | 0.750 | 0.33 | 107 | 81 | 80 |
| 54 | 0.750 | 0.33 | 107 | 81 | 80 |
| 55 | 0.740 | 0.33 | 105 | 81 | 80 |
| 56 | 0.750 | 0.32 | 108 | 82 | 81 |
| 57 | 0.750 | 0.32 | 105 | 82 | 81 |
| 58 | 0.750 | 0.33 | 105 | 82 | 81 |
| 59 | 0.750 | 0.34 | 105 | 81 | 81 |
| 60 | 0.740 | 0.34 | 104 | 81 | 81 |
| 61 | 0.740 | 0.33 | 104 | 81 | 81 |
| 62 | 0.760 | 0.33 | 104 | 81 | 80 |
| 63 | 0.760 | 0.34 | 104 | 80 | 79 |
| 64 | 0.760 | 0.33 | 105 | 80 | 79 |
| 65 | 0.760 | 0.34 | 105 | 79 | 78 |
| 66 | 0.770 | 0.34 | 104 | 79 | 78 |
| 67 | 0.770 | 0.33 | 104 | 79 | 78 |
| 68 | 0.760 | 0.33 | 104 | 78 | 77 |

| Fraction | Final Wt. (g) | Tare Wt. (g) | Blank Wt. (g) | Net Wt. (g) |
|---|---|---|---|---|
| DRY CATCH | 0.0000 | 0.0000 | 0.0000 | 0.0000 |
| FILTER | 0.0000 | 0.0000 | 0.0000 | 0.0000 |

| Fraction | Final Wt. (g) | Tare Wt. (g) | Vol. (ml) | Net Wt. (g) |
|---|---|---|---|---|
| PROBE RINSE | 0.0000 | 0.0000 | 0.0 | 0.0000 |
| IMPINGERS | 0.0000 | 0.0000 | 0.0 | 0.0000 |

Probe Rinse Blank (mg/ml)= 0.0000
Impinger Blank (mg/ml)= 0.0000

Multiple leak checks used. Final readings for each segment are listed below

| Lk Rate (cfm) | Time (min) |
|---|---|
| 0.0020 | 150.0000 |
| 0.0030 | 150.0000 |
| 0.0030 | 150.0000 |
| 0.0030 | 230.0000 |

FILE NAME - rfout1 PROG.=VER 06/09/89
RUN # - 1 - Method 0010 Train for POM & PAHs 02-17-1999 14:26:20
LOCATION - Reverberâtory Furnace #1 Baghouse Outlet Stack
DATE - 02/11/99 Time:1130-1400/1415-1645/1700-1930/1935-2345
PROJECT # - 4951.03.04.01

| | | |
|---|---|---|
| Initial Meter Volume (Cubic Feet)= | 6.555 | |
| Final Meter Volume (Cubic Feet)= | 185.544 | |
| Meter Factor= | 1.038 | |
| Multiple leak checks, see end of printout | | Leak Correction= 0.0000 |
| Net Meter Volume (Cubic Feet)= | 185.791 | |
| Gas Volume (Dry Standard Cubic Feet)= | 179.014 | |
| Barometric Pressure (in Hg)= | 29.61 | |
| Static Pressure (Inches H20)= | -0.30 | |
| Percent Oxygen= | 20.9 | |
| Percent Carbon Dioxide= | 0.2 | |
| Moisture Collected (ml)= | 85.2 | |
| Percent Water= | 2.2 | |
| Average Meter Temperature (F)= | 82 | |
| Average Delta H (in H20)= | 0.19 | |
| Average Delta P (in H20)= | 0.469 | |
| Average Stack Temperature (F)= | 108 | |
| Dry Molecular Weight= | 28.86 | |
| Wet Molecular Weight= | 28.63 | |
| Average Square Root of Delta P (in H20)= | 0.6845 | |
| % Isokinetic= | 101.0 | |
| Pitot Coefficient= | 0.83 | |
| Sampling Time (Minutes)= | 700.0 | |
| Nozzle Diameter (Inches)= | 0.147 | |
| Stack Axis #1 (Inches)= | 46.0 | |
| Stack Axis #2 (Inches)= | 45.7 | |
| Circular Stack | | |
| Stack Area (Square Feet)= | 11.46 | |
| Stack Velocity (Actual, Feet/min)= | 2,388 | |
| Flow Rate (Actual, Cubic ft/min)= | 27,376 | |
| Flow rate (Standard, Wet, Cubic ft/min)= | 25,183 | |
| Flow Rate (Standard, Dry, Cubic ft/min)= | 24,631 | |

Particulate Loading - Front Half

| | | |
|---|---|---|
| Particulate Weight (g)= | 0.0000 | Corr. to 7% O2 & 12% CO2 |
| Particulate Loading, Dry Std. (gr/scf)= | 0.0000 | 0.0000 0.0000 |
| Particulate Loading, Actual (gr/cu ft)= | 0.0000 | |
| Emission Rate (lb/hr)= | 0.00 | |

No Back Half Analysis

* * METRIC UNITS * *

FILE NAME - rfout1 PROG.=VER 06/09/89
RUN # - 1 - Method 0010 Train for POM & PAHs 02-17-1999 14:26:21
LOCATION - Reverberatory Furnace #1 Baghouse Outlet Stack
DATE - 02/11/99 Time:1130-1400/1415-1645/1700-1930/1935-2345
PROJECT # - 4951.03.04.01

| | | |
|---|---|---|
| Initial Meter Volume (Cubic Meters)= | 0.186 | |
| Final Meter Volume (Cubic Meters)= | 5.254 | |
| Meter Factor= | 1.038 | |
| Multiple leak checks, see end of printout | | Leak Correction= 0.0000 |
| Net Meter Volume (Cubic Meters)= | 5.261 | |
| Gas Volume (Dry Standard Cubic Meters)= | 5.069 | |
| Barometric Pressure (mm Hg)= | 752 | |
| Static Pressure (mm H20)= | -8 | |
| Percent Oxygen= | 20.9 | |
| Percent Carbon Dioxide= | 0.2 | |
| Moisture Collected (ml)= | 85.2 | |
| Percent Water= | 2.2 | |
| Average Meter Temperature (C)= | 28 | |
| Average Delta H (mm H20)= | 4.8 | |
| Average Delta P (mm H20)= | 11.9 | |
| Average Stack Temperature (C)= | 42 | |
| Dry Molecular Weight= | 28.86 | |
| Wet Molecular Weight= | 28.63 | |
| Average Square Root of Delta P (mm H20)= | 3.4499 | |
| % Isokinetic= | 101.0 | |
| Pitot Coefficient= | 0.83 | |
| Sampling Time (Minutes)= | 700.0 | |
| Nozzle Diameter (mm)= | 3.73 | |
| Stack Axis #1 (Meters)= | 1.168 | |
| Stack Axis #2 (Meters)= | 1.160 | |
| Circular Stack | | |
| Stack Area (Square Meters)= | 1.065 | |
| Stack Velocity (Actual, m/min)= | 728 | |
| Flow rate (Actual, Cubic m/min)= | 775 | |
| Flow rate (Standard, Wet, Cubic m/min)= | 713 | |
| Flow rate (Standard, Dry, Cubic m/min)= | 697 | |

Particulate Loading - Front Half

| | | |
|---|---|---|
| Particulate Weight (g)= | 0.0000 | Corr. to 7% O2 & 12% CO |
| Particulate Loading, Dry Std. (mg/cu m)= | 0.0 | 0.0 0.0 |
| Particulate Loading, Actual (mg/cu m)= | 0.0 | |
| Emission Rate (kg/hr)= | 0.00 | |

No Back Half Analysis

FILE NAME - rfout1 PROG.=VER 06/09/89
RUN # - 1 - Method 0010 Train for POM & PAHs 02-17-1999 14:26:21
LOCATION - Reverberatory Furnace #1 Baghouse Outlet Stack
DATE - 02/11/99 Time:1130-1400/1415-1645/1700-1930/1935-2345
PROJECT # - 4951.03.04.01

| Point # | Delta P (in. H20) | Delta H (in. H20) | Stack T (F) | Meter T In(F) | Meter T Out(F) |
|---|---|---|---|---|---|
| 1 | 0.410 | 0.20 | 118 | 67 | 67 |
| 2 | 0.350 | 0.12 | 124 | 72 | 71 |
| 3 | 0.450 | 0.19 | 137 | 75 | 72 |
| 4 | 0.440 | 0.16 | 138 | 78 | 76 |
| 5 | 0.490 | 0.19 | 134 | 82 | 79 |
| 6 | 0.490 | 0.19 | 138 | 83 | 81 |
| 7 | 0.460 | 0.18 | 135 | 85 | 82 |
| 8 | 0.500 | 0.21 | 126 | 86 | 84 |
| 9 | 0.500 | 0.20 | 112 | 88 | 86 |
| 10 | 0.500 | 0.19 | 109 | 88 | 86 |
| 11 | 0.500 | 0.19 | 118 | 88 | 86 |
| 12 | 0.520 | 0.19 | 123 | 88 | 87 |
| 13 | 0.450 | 0.17 | 139 | 87 | 86 |
| 14 | 0.440 | 0.16 | 150 | 86 | 86 |
| 15 | 0.480 | 0.18 | 142 | 87 | 86 |
| 16 | 0.500 | 0.19 | 139 | 87 | 85 |
| 17 | 0.520 | 0.21 | 115 | 88 | 86 |
| 18 | 0.520 | 0.21 | 113 | 88 | 86 |
| 19 | 0.500 | 0.20 | 115 | 89 | 87 |
| 20 | 0.520 | 0.21 | 114 | 89 | 87 |
| 21 | 0.530 | 0.21 | 123 | 89 | 87 |
| 22 | 0.510 | 0.20 | 122 | 89 | 87 |
| 23 | 0.470 | 0.18 | 128 | 88 | 86 |
| 24 | 0.490 | 0.19 | 126 | 87 | 85 |
| 25 | 0.350 | 0.12 | 114 | 85 | 85 |
| 26 | 0.360 | 0.13 | 110 | 84 | 85 |
| 27 | 0.420 | 0.18 | 107 | 86 | 85 |
| 28 | 0.420 | 0.19 | 102 | 87 | 86 |
| 29 | 0.460 | 0.20 | 95 | 87 | 86 |
| 30 | 0.450 | 0.20 | 93 | 87 | 86 |
| 31 | 0.410 | 0.16 | 100 | 86 | 86 |
| 32 | 0.430 | 0.16 | 116 | 84 | 85 |
| 33 | 0.490 | 0.20 | 96 | 82 | 83 |
| 34 | 0.490 | 0.20 | 99 | 81 | 81 |
| 35 | 0.450 | 0.18 | 114 | 80 | 81 |
| 36 | 0.470 | 0.19 | 114 | 79 | 79 |
| 37 | 0.470 | 0.20 | 104 | 77 | 78 |
| 38 | 0.470 | 0.20 | 97 | 77 | 78 |
| 39 | 0.470 | 0.19 | 88 | 77 | 78 |
| 40 | 0.470 | 0.19 | 86 | 77 | 78 |

FILE NAME - rfout1 PROG.=VER 06/09/89
RUN # - 1 - Method 0010 Train for POM & PAHs 02-17-1999 14:26:22
LOCATION - Reverberatory Furnace #1 Baghouse Outlet Stack
DATE - 02/11/99 Time:1130-1400/1415-1645 1700-1930/1935-2345
PROJECT # - 4951.03.04.01

| | | | | | |
|---|---|---|---|---|---|
| 41 | 0.470 | 0.20 | 85 | 77 | 77 |
| 42 | 0.480 | 0.21 | 86 | 78 | 78 |
| 43 | 0.500 | 0.21 | 84 | 79 | 78 |
| 44 | 0.490 | 0.21 | 89 | 80 | 79 |
| 45 | 0.500 | 0.21 | 86 | 82 | 79 |
| 46 | 0.510 | 0.22 | 86 | 83 | 81 |
| 47 | 0.500 | 0.21 | 84 | 84 | 82 |
| 48 | 0.500 | 0.21 | 84 | 84 | 82 |
| 49 | 0.460 | 0.19 | 83 | 83 | 82 |
| 50 | 0.460 | 0.19 | 85 | 83 | 82 |
| 51 | 0.470 | 0.20 | 82 | 82 | 81 |
| 52 | 0.460 | 0.19 | 82 | 81 | 80 |
| 53 | 0.470 | 0.22 | 82 | 80 | 79 |
| 54 | 0.470 | 0.20 | 84 | 79 | 78 |
| 55 | 0.460 | 0.19 | 86 | 79 | 77 |
| 56 | 0.470 | 0.20 | 86 | 77 | 76 |

| Fraction | Final Wt. (g) | Tare Wt. (g) | Blank Wt. (g) | Net Wt. (g) |
|---|---|---|---|---|
| DRY CATCH | 0.0000 | 0.0000 | 0.0000 | 0.0000 |
| FILTER | 0.0000 | 0.0000 | 0.0000 | 0.0000 |

| Fraction | Final Wt. (g) | Tare Wt. (g) | Vol. (ml) | Net Wt. (g) |
|---|---|---|---|---|
| PROBE RINSE | 0.0000 | 0.0000 | 0.0 | 0.0000 |
| IMPINGERS | 0.0000 | 0.0000 | 0.0 | 0.0000 |

Probe Rinse Blank (mg/ml)= 0.0000
Impinger Blank (mg/ml)= 0.0000

Multiple leak checks used. Final readings for each segment are listed below

| Lk Rate (cfm) | Time (min) |
|---|---|
| 0.0030 | 150.0000 |
| 0.0030 | 150.0000 |
| 0.0030 | 150.0000 |
| 0.0020 | 250.0000 |

FILE NAME - rfin2 PROG.=VER 06/09/89
RUN # - 2 - Method 0010 Train for POM & PAHs 02-17-1999 14:27:20
LOCATION - Reverberatory Furnace #1 Baghouse Inlet Duct
DATE - 1015-1035/1045-1255/1300-1530/1610-1840/1855-2315
PROJECT # - 4951.03.04.01

| | | |
|---|---|---|
| Initial Meter Volume (Cubic Feet)= | 558.275 | |
| Final Meter Volume (Cubic Feet)= | 796.164 | |
| Meter Factor= | 0.985 | |
| Multiple leak checks, see end of printout | | Leak Correction= 0.0000 |
| Net Meter Volume (Cubic Feet)= | 234.321 | |
| Gas Volume (Dry Standard Cubic Feet)= | 236.299 | |
| Barometric Pressure (in Hg)= | 29.72 | |
| Static Pressure (Inches H20)= | -1.70 | |
| Percent Oxygen= | 20.9 | |
| Percent Carbon Dioxide= | 0.2 | |
| Moisture Collected (ml)= | 29.1 | |
| Percent Water= | 0.6 | |
| Average Meter Temperature (F)= | 60 | |
| Average Delta H (in H20)= | 0.35 | |
| Average Delta P (in H20)= | 0.845 | |
| Average Stack Temperature (F)= | 123 | |
| Dry Molecular Weight= | 28.87 | |
| Wet Molecular Weight= | 28.81 | |
| Average Square Root of Delta P (in H20)= | 0.9178 | |
| % Isokinetic= | 98.5 | |
| Pitot Coefficient= | 0.83 | |
| Sampling Time (Minutes)= | 710.0 | |
| Nozzle Diameter (Inches)= | 0.147 | |
| Stack Axis #1 (Inches)= | 36.5 | |
| Stack Axis #2 (Inches)= | 38.2 | |
| Circular Stack | | |
| Stack Area (Square Feet)= | 7.60 | |
| Stack Velocity (Actual, Feet/min)= | 3,221 | |
| Flow Rate (Actual, Cubic ft/min)= | 24,483 | |
| Flow rate (Standard, Wet, Cubic ft/min)= | 21,914 | |
| Flow Rate (Standard, Dry, Cubic ft/min)= | 21,788 | |

Particulate Loading - Front Half

| | | Corr. to 7% O2 | & 12% CO2 |
|---|---|---|---|
| Particulate Weight (g)= | 0.0000 | | |
| Particulate Loading, Dry Std. (gr/scf)= | 0.0000 | 0.0000 | 0.0000 |
| Particulate Loading, Actual (gr/cu ft)= | 0.0000 | | |
| Emission Rate (lb/hr)= | 0.00 | | |

No Back Half Analysis

* * METRIC UNITS * *

FILE NAME - rfin2 PROG.=VER 06/09/89
RUN # - 2 - Method 0010 Train for POM & PAHs 02-17-1999 14:27:20
LOCATION - Reverberatory Furnace #1 Baghouse Inlet Duct
DATE - 1015-1035/1045-1255/1300-1530/1610-1840/1855-2315
PROJECT # - 4951.03.04.01

| | | |
|---|---|---|
| Initial Meter Volume (Cubic Meters)= | 15.808 | |
| Final Meter Volume (Cubic Meters)= | 22.544 | |
| Meter Factor= | 0.985 | |
| Multiple leak checks, see end of printout | | Leak Correction= 0.0000 |
| Net Meter Volume (Cubic Meters)= | 6.635 | |
| Gas Volume (Dry Standard Cubic Meters)= | 6.691 | |
| Barometric Pressure (mm Hg)= | 755 | |
| Static Pressure (mm H20)= | -43 | |
| Percent Oxygen= | 20.9 | |
| Percent Carbon Dioxide= | 0.2 | |
| Moisture Collected (ml)= | 29.1 | |
| Percent Water= | 0.6 | |
| Average Meter Temperature (C)= | 16 | |
| Average Delta H (mm H20)= | 8.8 | |
| Average Delta P (mm H20)= | 21.5 | |
| Average Stack Temperature (C)= | 51 | |
| Dry Molecular Weight= | 28.87 | |
| Wet Molecular Weight= | 28.81 | |
| Average Square Root of Delta P (mm H20)= | 4.6254 | |
| % Isokinetic= | 98.5 | |
| Pitot Coefficient= | 0.83 | |
| Sampling Time (Minutes)= | 710.0 | |
| Nozzle Diameter (mm)= | 3.73 | |
| Stack Axis #1 (Meters)= | 0.927 | |
| Stack Axis #2 (Meters)= | 0.970 | |
| Circular Stack | | |
| Stack Area (Square Meters)= | 0.706 | |
| Stack Velocity (Actual, m/min)= | 982 | |
| Flow rate (Actual, Cubic m/min)= | 693 | |
| Flow rate (Standard, Wet, Cubic m/min)= | 621 | |
| Flow rate (Standard, Dry, Cubic m/min)= | 617 | |

Particulate Loading - Front Half

| | | |
|---|---|---|
| Particulate Weight (g)= | 0.0000 | Corr. to 7% O2 & 12% CO |
| Particulate Loading, Dry Std. (mg/cu m)= | 0.0 | 0.0 0.0 |
| Particulate Loading, Actual (mg/cu m)= | 0.0 | |
| Emission Rate (kg/hr)= | 0.00 | |

No Back Half Analysis

FILE NAME - rfin2 PROG.=VER 06/09/89
RUN # - 2 - Method 0010 Train for POM & PAHs 02-17-1999 14:27:20
LOCATION - Reverberatory Furnace #1 Baghouse Inlet Duct
DATE - 1015-1035/1045-1255/1300-1530/1610-1840/1855-2315
PROJECT # - 4951.03.04.01

| Point # | Delta P (in. H20) | Delta H (in. H20) | Stack T (F) | Meter T In(F) | Meter T Out(F) |
|---|---|---|---|---|---|
| 1 | 0.800 | 0.31 | 140 | 42 | 41 |
| 2 | 0.750 | 0.28 | 115 | 45 | 43 |
| 3 | 0.780 | 0.26 | 200 | 48 | 48 |
| 4 | 0.800 | 0.28 | 225 | 52 | 49 |
| 5 | 0.750 | 0.28 | 200 | 55 | 51 |
| 6 | 0.800 | 0.33 | 120 | 57 | 53 |
| 7 | 0.800 | 0.31 | 120 | 59 | 55 |
| 8 | 0.750 | 0.28 | 120 | 61 | 57 |
| 9 | 0.780 | 0.29 | 130 | 61 | 58 |
| 10 | 0.800 | 0.29 | 175 | 63 | 60 |
| 11 | 0.700 | 0.30 | 110 | 65 | 62 |
| 12 | 0.800 | 0.35 | 100 | 66 | 63 |
| 13 | 0.820 | 0.35 | 90 | 68 | 64 |
| 14 | 0.820 | 0.33 | 100 | 69 | 66 |
| 15 | 0.800 | 0.30 | 120 | 69 | 66 |
| 16 | 0.800 | 0.32 | 120 | 68 | 68 |
| 17 | 0.780 | 0.32 | 140 | 69 | 68 |
| 18 | 0.780 | 0.29 | 200 | 70 | 68 |
| 19 | 0.700 | 0.27 | 160 | 69 | 68 |
| 20 | 0.650 | 0.20 | 250 | 69 | 69 |
| 21 | 0.550 | 0.21 | 140 | 68 | 68 |
| 22 | 0.850 | 0.32 | 160 | 69 | 69 |
| 23 | 0.820 | 0.37 | 100 | 69 | 68 |
| 24 | 0.850 | 0.37 | 90 | 69 | 68 |
| 25 | 0.780 | 0.29 | 175 | 68 | 68 |
| 26 | 0.750 | 0.25 | 200 | 68 | 68 |
| 27 | 0.720 | 0.25 | 200 | 68 | 67 |
| 28 | 0.700 | 0.26 | 145 | 68 | 67 |
| 29 | 0.700 | 0.26 | 200 | 67 | 66 |
| 30 | 0.670 | 0.28 | 115 | 68 | 66 |
| 31 | 0.730 | 0.29 | 140 | 64 | 64 |
| 32 | 0.820 | 0.36 | 95 | 62 | 63 |
| 33 | 0.850 | 0.26 | 300 | 64 | 63 |
| 34 | 0.700 | 0.26 | 175 | 64 | 64 |
| 35 | 0.770 | 0.30 | 150 | 64 | 63 |
| 36 | 0.900 | 0.35 | 175 | 65 | 64 |
| 37 | 1.000 | 0.38 | 175 | 65 | 64 |
| 38 | 1.000 | 0.38 | 200 | 64 | 63 |
| 39 | 1.000 | 0.36 | 200 | 64 | 63 |
| 40 | 0.980 | 0.38 | 125 | 64 | 63 |

FILE NAME - rfin2
RUN # - 2 - Method 0010 Train for POM & PAHs
LOCATION - Reverberatory Furnace #1 Baghouse Inlet Duct
DATE - 1015-1035/1045-1255/1300-1530/1610-1840/1855-2315
PROJECT # - 4951.03.04.01

PROG.=VER 06/09/89
02-17-1999 14:27:21

| | | | | | |
|---|---|---|---|---|---|
| 41 | 0.870 | 0.36 | 125 | 64 | 63 |
| 42 | 0.870 | 0.33 | 175 | 63 | 62 |
| 43 | 0.800 | 0.33 | 140 | 62 | 61 |
| 44 | 0.800 | 0.33 | 115 | 60 | 60 |
| 45 | 0.850 | 0.37 | 100 | 59 | 59 |
| 46 | 0.940 | 0.42 | 76 | 56 | 56 |
| 47 | 0.940 | 0.42 | 76 | 55 | 55 |
| 48 | 0.940 | 0.43 | 76 | 55 | 55 |
| 49 | 0.940 | 0.43 | 76 | 56 | 55 |
| 50 | 0.940 | 0.42 | 78 | 57 | 55 |
| 51 | 0.940 | 0.40 | 76 | 56 | 54 |
| 52 | 0.930 | 0.40 | 73 | 57 | 55 |
| 53 | 0.930 | 0.42 | 73 | 58 | 56 |
| 54 | 0.880 | 0.39 | 73 | 58 | 56 |
| 55 | 0.920 | 0.41 | 72 | 59 | 58 |
| 56 | 0.950 | 0.41 | 71 | 59 | 58 |
| 57 | 0.920 | 0.40 | 72 | 58 | 58 |
| 58 | 0.920 | 0.40 | 72 | 58 | 58 |
| 59 | 0.930 | 0.41 | 71 | 58 | 57 |
| 60 | 0.940 | 0.42 | 72 | 58 | 57 |
| 61 | 0.940 | 0.42 | 72 | 57 | 56 |
| 62 | 0.970 | 0.46 | 72 | 57 | 55 |
| 63 | 0.930 | 0.41 | 72 | 56 | 55 |
| 64 | 0.910 | 0.39 | 73 | 56 | 55 |
| 65 | 0.920 | 0.41 | 72 | 56 | 54 |
| 66 | 0.920 | 0.42 | 74 | 56 | 54 |
| 67 | 0.910 | 0.42 | 75 | 56 | 54 |
| 68 | 0.940 | 0.43 | 74 | 56 | 55 |
| 69 | 0.940 | 0.41 | 75 | 56 | 54 |
| 70 | 0.940 | 0.41 | 75 | 56 | 54 |
| 71 | 0.940 | 0.40 | 77 | 56 | 54 |

| Fraction | Final Wt. (g) | Tare Wt. (g) | Blank Wt. (g) | Net Wt. (g) |
|---|---|---|---|---|
| DRY CATCH | 0.0000 | 0.0000 | 0.0000 | 0.0000 |
| FILTER | 0.0000 | 0.0000 | 0.0000 | 0.0000 |

| Fraction | Final Wt. (g) | Tare Wt. (g) | Vol. (ml) | Net Wt. (g) |
|---|---|---|---|---|
| PROBE RINSE | 0.0000 | 0.0000 | 0.0 | 0.0000 |
| IMPINGERS | 0.0000 | 0.0000 | 0.0 | 0.0000 |

Probe Rinse Blank (mg/ml)= 0.0000
Impinger Blank (mg/ml)= 0.0000

Multiple leak checks used. Final readings for each segment are listed below

| Lk Rate (cfm) | Time (min) |
|---|---|
| 0.0010 | 150.0000 |
| 0.0010 | 150.0000 |
| 0.0080 | 150.0000 |

| | |
|---|---|
| 0.0010 | 260.0000 |

FILE NAME - rfout2 PROG.=VER 06/09/89
RUN # - 2 - Method 0010 Train for POM & PAHs 02-17-1999 14:28:20
LOCATION - Reverberatory Furnace #1 Baghouse Outlet Stack
DATE - 02/12/99 Time:1015-1245/1250-1520/1535-1805/1815-2315
PROJECT # - 4951.03.04.01

| | | |
|---|---|---|
| Initial Meter Volume (Cubic Feet)= | 187.783 | |
| Final Meter Volume (Cubic Feet)= | 377.666 | |
| Meter Factor= | 1.038 | |
| Multiple leak checks, see end of printout | | Leak Correction= 0.0000 |
| Net Meter Volume (Cubic Feet)= | 197.099 | |
| Gas Volume (Dry Standard Cubic Feet)= | 198.466 | |
| Barometric Pressure (in Hg)= | 29.72 | |
| Static Pressure (Inches H20)= | -0.30 | |
| Percent Oxygen= | 20.9 | |
| Percent Carbon Dioxide= | 0.2 | |
| Moisture Collected (ml)= | 36.9 | |
| Percent Water= | 0.9 | |
| Average Meter Temperature (F)= | 61 | |
| Average Delta H (in H20)= | 0.19 | |
| Average Delta P (in H20)= | 0.480 | |
| Average Stack Temperature (F)= | 84 | |
| Dry Molecular Weight= | 28.87 | |
| Wet Molecular Weight= | 28.77 | |
| Average Square Root of Delta P (in H20)= | 0.6904 | |
| % Isokinetic= | 100.1 | |
| Pitot Coefficient= | 0.83 | |
| Sampling Time (Minutes)= | 750.0 | |
| Nozzle Diameter (Inches)= | 0.147 | |
| Stack Axis #1 (Inches)= | 46.0 | |
| Stack Axis #2 (Inches)= | 45.7 | |
| Circular Stack | | |
| Stack Area (Square Feet)= | 11.46 | |
| Stack Velocity (Actual, Feet/min)= | 2,348 | |
| Flow Rate (Actual, Cubic ft/min)= | 26,917 | |
| Flow rate (Standard, Wet, Cubic ft/min)= | 25,923 | |
| Flow Rate (Standard, Dry, Cubic ft/min)= | 25,698 | |

Particulate Loading - Front Half

| | | |
|---|---|---|
| Particulate Weight (g)= | 0.0000 | Corr. to 7% O2 & 12% CO2 |
| Particulate Loading, Dry Std. (gr/scf)= | 0.0000 | 0.0000 0.0000 |
| Particulate Loading, Actual (gr/cu ft)= | 0.0000 | |
| Emission Rate (lb/hr)= | 0.00 | |

No Back Half Analysis

* * METRIC UNITS * *

FILE NAME - rfout2 PROG.=VER 06/09/89
RUN # - 2 - Method 0010 Train for POM & PAHs 02-17-1999 · 14:28:20
LOCATION - Reverberatory Furnace #1 Baghouse Outlet Stack
DATE - 02/12/99 Time:1015-1245/1250-1520/1535-1805/1815-2315
PROJECT # - 4951.03.04.01

| | | |
|---|---|---|
| Initial Meter Volume (Cubic Meters)= | 5.317 | |
| Final Meter Volume (Cubic Meters)= | 10.694 | |
| Meter Factor= | 1.038 | |
| Multiple leak checks, see end of printout | | Leak Correction= 0.0000 |
| Net Meter Volume (Cubic Meters)= | 5.581 | |
| Gas Volume (Dry Standard Cubic Meters)= | 5.620 | |
| Barometric Pressure (mm Hg)= | 755 | |
| Static Pressure (mm H20)= | -8 | |
| Percent Oxygen= | 20.9 | |
| Percent Carbon Dioxide= | 0.2 | |
| Moisture Collected (ml)= | 36.9 | |
| Percent Water= | 0.9 | |
| Average Meter Temperature (C)= | 16 | |
| Average Delta H (mm H20)= | 4.9 | |
| Average Delta P (mm H20)= | 12.2 | |
| Average Stack Temperature (C)= | 29 | |
| Dry Molecular Weight= | 28.87 | |
| Wet Molecular Weight= | 28.77 | |
| Average Square Root of Delta P (mm H20)= | 3.4797 | |
| % Isokinetic= | 100.1 | |
| Pitot Coefficient= | 0.83 | |
| Sampling Time (Minutes)= | 750.0 | |
| Nozzle Diameter (mm)= | 3.73 | |
| Stack Axis #1 (Meters)= | 1.168 | |
| Stack Axis #2 (Meters)= | 1.160 | |
| Circular Stack | | |
| Stack Area (Square Meters)= | 1.065 | |
| Stack Velocity (Actual, m/min)= | 716 | |
| Flow rate (Actual, Cubic m/min)= | 762 | |
| Flow rate (Standard, Wet, Cubic m/min)= | 734 | |
| Flow rate (Standard, Dry, Cubic m/min)= | 728 | |

Particulate Loading - Front Half

| | | | |
|---|---|---|---|
| Particulate Weight (g)= | 0.0000 | Corr. to 7% O2 & 12% CO2 | |
| Particulate Loading, Dry Std. (mg/cu m)= | 0.0 | 0.0 | 0.0 |
| Particulate Loading, Actual (mg/cu m)= | 0.0 | | |
| Emission Rate (kg/hr)= | 0.00 | | |

No Back Half Analysis

FILE NAME - rfout2 PROG.=VER 06/09/89
RUN # - 2 - Method 0010 Train for POM & PAHs 02-17-1999 14:28:21
LOCATION - Reverberatory Furnace #1 Baghouse Outlet Stack
DATE - 02/12/99 Time:1015-1245/1250-1520/1535-1805/1815-2315
PROJECT # - 4951.03.04.01

| Point # | Delta P (in. H20) | Delta H (in. H20) | Stack T (F) | Meter T In(F) | Meter T Out(F) |
|---|---|---|---|---|---|
| 1 | 0.430 | 0.17 | 78 | 43 | 42 |
| 2 | 0.400 | 0.15 | 93 | 48 | 45 |
| 3 | 0.400 | 0.15 | 92 | 51 | 49 |
| 4 | 0.430 | 0.17 | 99 | 54 | 51 |
| 5 | 0.400 | 0.15 | 111 | 56 | 53 |
| 6 | 0.420 | 0.16 | 105 | 57 | 55 |
| 7 | 0.440 | 0.16 | 101 | 59 | 57 |
| 8 | 0.440 | 0.17 | 95 | 60 | 58 |
| 9 | 0.420 | 0.15 | 102 | 60 | 59 |
| 10 | 0.450 | 0.17 | 105 | 62 | 60 |
| 11 | 0.460 | 0.18 | 91 | 64 | 62 |
| 12 | 0.470 | 0.19 | 82 | 65 | 63 |
| 13 | 0.470 | 0.19 | 86 | 65 | 64 |
| 14 | 0.480 | 0.19 | 89 | 65 | 64 |
| 15 | 0.480 | 0.19 | 95 | 66 | 65 |
| 16 | 0.470 | 0.18 | 105 | 68 | 66 |
| 17 | 0.380 | 0.15 | 102 | 67 | 67 |
| 18 | 0.400 | 0.15 | 113 | 67 | 67 |
| 19 | 0.570 | 0.23 | 108 | 68 | 67 |
| 20 | 0.630 | 0.27 | 98 | 68 | 68 |
| 21 | 0.590 | 0.23 | 110 | 69 | 68 |
| 22 | 0.490 | 0.18 | 123 | 69 | 68 |
| 23 | 0.520 | 0.20 | 123 | 69 | 68 |
| 24 | 0.550 | 0.22 | 114 | 68 | 67 |
| 25 | 0.300 | 0.10 | 90 | 67 | 67 |
| 26 | 0.250 | 0.08 | 92 | 67 | 67 |
| 27 | 0.350 | 0.12 | 101 | 67 | 66 |
| 28 | 0.340 | 0.11 | 113 | 66 | 66 |
| 29 | 0.380 | 0.16 | 83 | 65 | 66 |
| 30 | 0.330 | 0.12 | 111 | 66 | 66 |
| 31 | 0.450 | 0.18 | 108 | 66 | 65 |
| 32 | 0.520 | 0.21 | 91 | 66 | 65 |
| 33 | 0.500 | 0.20 | 95 | 66 | 65 |
| 34 | 0.490 | 0.19 | 108 | 66 | 65 |
| 35 | 0.510 | 0.20 | 98 | 66 | 65 |
| 36 | 0.480 | 0.19 | 101 | 66 | 65 |
| 37 | 0.480 | 0.19 | 96 | 62 | 63 |
| 38 | 0.500 | 0.21 | 77 | 61 | 61 |
| 39 | 0.510 | 0.22 | 63 | 61 | 61 |
| 40 | 0.520 | 0.23 | 60 | 61 | 60 |

FILE NAME - rfout2 PROG.=VER 06/09/89
RUN # - 2 - Method 0010 Train for POM & PAHs 02-17-1999 14:28:21
LOCATION - Reverberatory Furnace #1 Baghouse Outlet Stack
DATE - 02/12/99 Time:1015-1245/1250-1520/1535-1805/1815-2315
PROJECT # - 4951.03.04.01

| | | | | | |
|---|---|---|---|---|---|
| 41 | 0.530 | 0.23 | 56 | 60 | 60 |
| 42 | 0.540 | 0.24 | 57 | 61 | 59 |
| 43 | 0.550 | 0.24 | 58 | 61 | 59 |
| 44 | 0.560 | 0.25 | 58 | 60 | 59 |
| 45 | 0.560 | 0.25 | 60 | 61 | 59 |
| 46 | 0.560 | 0.25 | 59 | 61 | 59 |
| 47 | 0.560 | 0.24 | 58 | 61 | 59 |
| 48 | 0.550 | 0.23 | 57 | 61 | 59 |
| 49 | 0.520 | 0.23 | 57 | 61 | 59 |
| 50 | 0.520 | 0.23 | 55 | 61 | 59 |
| 51 | 0.530 | 0.23 | 55 | 59 | 57 |
| 52 | 0.530 | 0.23 | 55 | 57 | 56 |
| 53 | 0.520 | 0.22 | 55 | 56 | 55 |
| 54 | 0.520 | 0.22 | 56 | 55 | 54 |
| 55 | 0.530 | 0.23 | 56 | 55 | 54 |
| 56 | 0.530 | 0.23 | 56 | 55 | 54 |
| 57 | 0.520 | 0.22 | 59 | 55 | 53 |
| 58 | 0.520 | 0.22 | 59 | 55 | 53 |
| 59 | 0.520 | 0.22 | 58 | 54 | 52 |
| 60 | 0.520 | 0.22 | 59 | 55 | 52 |

| Fraction | Final Wt. (g) | Tare Wt. (g) | Blank Wt. (g) | Net Wt. (g) |
|---|---|---|---|---|
| DRY CATCH | 0.0000 | 0.0000 | 0.0000 | 0.0000 |
| FILTER | 0.0000 | 0.0000 | 0.0000 | 0.0000 |

| Fraction | Final Wt. (g) | Tare Wt. (g) | Vol. (ml) | Net Wt. (g) |
|---|---|---|---|---|
| PROBE RINSE | 0.0000 | 0.0000 | 0.0 | 0.0000 |
| IMPINGERS | 0.0000 | 0.0000 | 0.0 | 0.0000 |

Probe Rinse Blank (mg/ml)= 0.0000
Impinger Blank (mg/ml)= 0.0000

Multiple leak checks used. Final readings for each segment are listed below

| Lk Rate (cfm) | Time (min) |
|---|---|
| 0.0040 | 150.0000 |
| 0.0050 | 150.0000 |
| 0.0020 | 150.0000 |
| 0.0020 | 300.0000 |

# 40 CFR 60, APPENDIX A, METHOD 1 - LOCATION OF TRAVERSE POINTS IN A CIRCULAR DUCT

MRI Project No 4951 03 04 01
Client/Source U S. EPA OAQPS EMAD SCG/Chip Dryer
Source Location Steele, Alabama
Sampling Location Chip Dryer Baghouse Inlet Duct (CS1)
Date 02/08/99 For Run Numbers: 1-2
Dimensions obtained by/from J Surman and A. Page
Data recorded by J. Surman

Port - A

Inside of far wall to outside reference point (distance Li): 24.125 inches
Inside of near wall to outside reference point (distance Lo): 6.375 inches
Duct inside diameter (Li - Lo) 17.750 inches

Port - B

Inside of far wall to outside reference point (distance Li) 23.625 inches
Inside of near wall to outside reference point (distance Lo): 6 000 inches
Duct inside diameter (Li - Lo). 17.625 inches
Nearest flow disturbance upstream from ports: 173 inches, ( 9.7 D )
Nearest flow disturbance downstream from ports: 32 inches, ( 1.8 D )
Minimum number of points for velocity (nonparticulate) traverses: 12
Minimum number of points for particulate traverses. 12

Port - A

Inside diameter of the duct: 17 75 inches
Number of traverse points to be used on a diameter. 6
Length of port from reference point to inside surface of duct 6.38 inches
Cross sectional area of sampling location: 1.706 ft²

Port - A

| Traverse Point | Percent of Duct Diameter from Wall to Traverse Point | Distance from Reference Point to Traverse Point, inches |
|---|---|---|
| 1 | 4 4% | 7 15 |
| 2 | 14 6% | 8 97 |
| 3 | 29 6% | 11 63 |
| 4 | 70 4% | 18 87 |
| 5 | 85 4% | 21 53 |
| 6 | 95 6% | 23 35 |

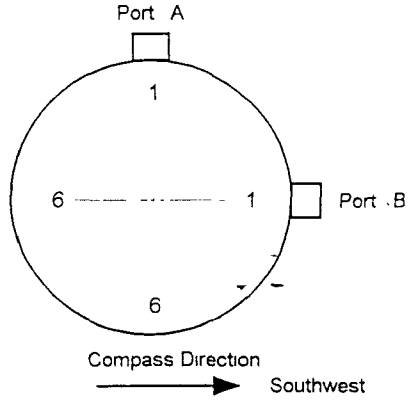


Horizontal Duct - Flow Toward Observer

Comments

## 40 CFR 60, APPENDIX A, METHOD 1 - LOCATION OF TRAVERSE POINTS IN A CIRCULAR DUCT

MRI Project No 4951.03 04 01
Client/Source: U.S EPA OAQPS EMAD SCG/Chip Dryer
Source Location. Steele, Alabama
Sampling Location: Chip Dryer Baghouse Inlet Duct (CS1)
Date: 02/08/99 For Run Numbers: 1-2
Dimensions obtained by/from: J. Surman and A. Page
Data recorded by: J. Surman

Port - A

Inside of far wall to outside reference point (distance Li): 24.125 inches
Inside of near wall to outside reference point (distance Lo): 6.375 inches
Duct inside diameter (Li - Lo): 17.750 inches

Port - B

Inside of far wall to outside reference point (distance Li): 23.625 inches
Inside of near wall to outside reference point (distance Lo): 6.000 inches
Duct inside diameter (Li - Lo): 17.625 inches
Nearest flow disturbance upstream from ports. 173 inches, ( 9 8 D )
Nearest flow disturbance downstream from ports: 32 inches, ( 1.8 D )
Minimum number of points for velocity (nonparticulate) traverses: 12
Minimum number of points for particulate traverses: 12

Port - B

Inside diameter of the duct: 17 63 inches
Number of traverse points to be used on a diameter: 6
Length of port from reference point to inside surface of duct: 6.00 inches
Cross sectional area of sampling location: 1.706 ft²

Port - B

| Traverse Point | Percent of Duct Diameter from Wall to Traverse Point | Distance from Reference Point to Traverse Point, inches |
|---|---|---|
| 1 | 4 4% | 6 77 |
| 2 | 14.6% | 8 58 |
| 3 | 29.6% | 11 21 |
| 4 | 70 4% | 18.41 |
| 5 | 85.4% | 21 04 |
| 6 | 95 6% | 22 86 |

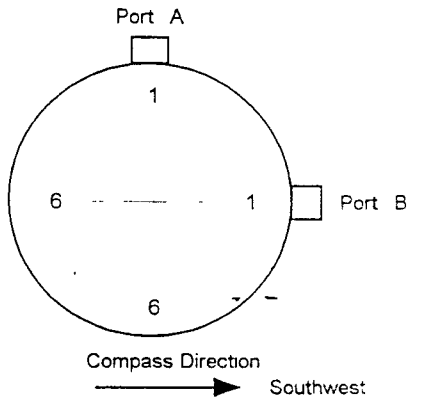


Horizontal Duct - Flow Toward Observer

Comments:

# 40 CFR 60, APPENDIX A, METHOD 1 - LOCATION OF TRAVERSE POINTS IN A CIRCULAR DUCT

MRI Project No 4951.03.04.01
Client/Source: U.S. EPA OAQPS EMAD SCG/Chip Dryer
Source Location: Steele, Alabama
Sampling Location: Chip Dryer Baghouse Outlet Stack (CS2)
Date 02/08/99 For Run Numbers: 1-2
Dimensions obtained by/from: J. Surman and D. Alburty
Data recorded by: J. Surman

Port - A

Inside of far wall to outside reference point (distance Li). 26 000 inches
Inside of near wall to outside reference point (distance Lo): 3.250 inches
Duct inside diameter (Li - Lo): 22.750 inches

Port - B

Inside of far wall to outside reference point (distance Li): 27.500 inches
Inside of near wall to outside reference point (distance Lo): 3.250 inches
Duct inside diameter (Li - Lo): 24 250 inches
Nearest flow disturbance upstream from ports: 22 inches, ( 1 0 D )
Nearest flow disturbance downstream from ports: 15 inches, ( 0.7 D )
Minimum number of points for velocity (nonparticulate) traverses: 16
Minimum number of points for particulate traverses: 24

Port - A

Inside diameter of the duct: 22.75 inches
Number of traverse points to be used on a diameter: 12
Length of port from reference point to inside surface of duct: 3 25 inches
Cross sectional area of sampling location: 3 012 ft²

Port - A

| Traverse Point | Percent of Duct Diameter from Wall to Traverse Point | Distance from Reference Point to Traverse Point, inches |
|---|---|---|
| 1 | 2 2% | 3 75 |
| 2 | 6.7% | 4 77 |
| 3 | 11 8% | 5 94 |
| 4 | 17.7% | 7 28 |
| 5 | 25 0% | 8 94 |
| 6 | 35 6% | 11 34 |
| 7 | 64.4% | 17 91 |
| 8 | 75 0% | 20 31 |
| 9 | 82.3% | 21 97 |
| 10 | 88 2% | 23 31 |
| 11 | 93 3% | 24 48 |
| 12 | 97 8% | 25 50 |

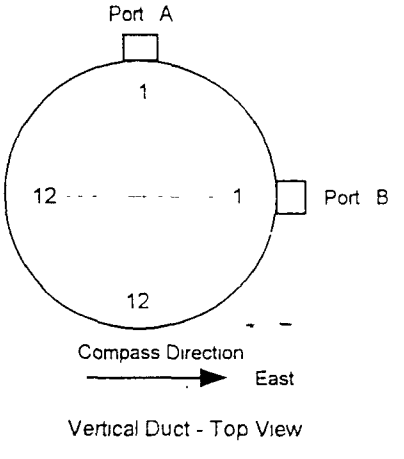

Vertical Duct - Top View

Comments

## 40 CFR 60, APPENDIX A, METHOD 1 - LOCATION OF TRAVERSE POINTS IN A CIRCULAR DUCT

MRI Project No. 4951.03 04.01
Client/Source: U.S. EPA OAQPS EMAD SCG/Chip Dryer
Source Location: Steele, Alabama
Sampling Location: Chip Dryer Baghouse Outlet Stack (CS2)
Date: 02/08/99 For Run Numbers: 1-2
Dimensions obtained by/from: J. Surman and D. Alburty
Data recorded by: J. Surman

Port - A

| | | |
|---|---|---|
| Inside of far wall to outside reference point (distance Li): | 26.000 | inches |
| Inside of near wall to outside reference point (distance Lo): | 3.250 | inches |
| Duct inside diameter (Li - Lo): | 22 750 | inches |

Port - B

| | | |
|---|---|---|
| Inside of far wall to outside reference point (distance Li): | 27.500 | inches |
| Inside of near wall to outside reference point (distance Lo): | 3.250 | inches |
| Duct inside diameter (Li - Lo): | 24.250 | inches |
| Nearest flow disturbance upstream from ports | 22 | inches, ( 0 9 D ) |
| Nearest flow disturbance downstream from ports | 15 | inches, ( 0.6 D ) |
| Minimum number of points for velocity (nonparticulate) traverses: | 16 | |
| Minimum number of points for particulate traverses | 24 | |

Port - B

| | | |
|---|---|---|
| Inside diameter of the duct: | 24 25 | inches |
| Number of traverse points to be used on a diameter: | 12 | |
| Length of port from reference point to inside surface of duct: | 3 25 | inches |
| Cross sectional area of sampling location | 3 012 | ft² |

Port - B

| Traverse Point | Percent of Duct Diameter from Wall to Traverse Point | Distance from Reference Point to Traverse Point, inches |
|---|---|---|
| 1 | 4 1% | 4 25 |
| 2 | 6 7% | 4 87 |
| 3 | 11 8% | 6 11 |
| 4 | 17.7% | 7.55 |
| 5 | 25.0% | 9.31 |
| 6 | 35 6% | 11 87 |
| 7 | 64 4% | 18.88 |
| 8 | 75 0% | 21 44 |
| 9 | 82 3% | 23 20 |
| 10 | 88 2% | 24 64 |
| 11 | 93 3% | 25.88 |
| 12 | 95 9% | 26 50 |

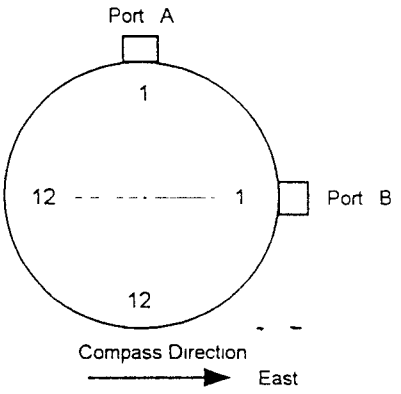

Vertical Duct - Top View

Comments:

# 40 CFR 60, APPENDIX A, METHOD 1 - LOCATION OF TRAVERSE POINTS IN A CIRCULAR DUCT

MRI Project No 4951 03.04.01
Client/Source: U S. EPA OAQPS EMAD SCG/Reverberatory Furnace #1
Source Location. Steele, Alabama
Sampling Location: Furnace #1 Baghouse Inlet Duct (CS3)
Date: 02/10/99 For Run Numbers: 1-2
Dimensions obtained by/from: J. Surman and A. Page
Data recorded by: J. Surman

Port - A

Inside of far wall to outside reference point (distance Li): 42.750 inches
Inside of near wall to outside reference point (distance Lo): 6.250 inches
Duct inside diameter (Li - Lo): 36.500 inches

Port - B

Inside of far wall to outside reference point (distance Li): 44.500 inches
Inside of near wall to outside reference point (distance Lo): 6.313 inches
Duct inside diameter (Li - Lo) 38.187 inches
Nearest flow disturbance upstream from ports: 672 inches, ( 18 4 D )
Nearest flow disturbance downstream from ports. 204 inches, ( 5 6 D )
Minimum number of points for velocity (nonparticulate) traverses: 12
Minimum number of points for particulate traverses: 12

Port - A

Inside diameter of the duct. 36.50 inches
Number of traverse points to be used on a diameter: 6
Length of port from reference point to inside surface of duct: 6 25 inches
Cross sectional area of sampling location 7.606 ft²

Port - A

| Traverse Point | Percent of Duct Diameter from Wall to Traverse Point | Distance from Reference Point to Traverse Point, inches |
|---|---|---|
| 1 | 4 4% | 7.84 |
| 2 | 14.6% | 11 60 |
| 3 | 29.6% | 17 05 |
| 4 | 70.4% | 31.95 |
| 5 | 85.4% | 37 40 |
| 6 | 95 6% | 41 16 |

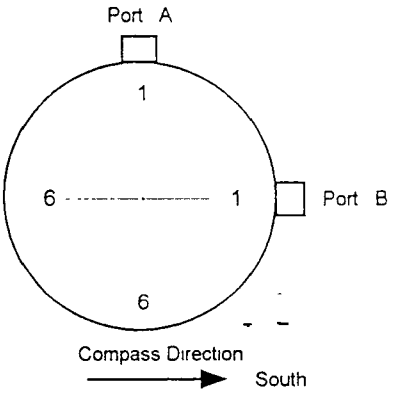


Horizontal Duct - Flow Away From Observer

Comments.

## 40 CFR 60, APPENDIX A, METHOD 1 - LOCATION OF TRAVERSE POINTS IN A CIRCULAR DUCT

MRI Project No: 4951 03.04.01
Client/Source: U.S. EPA OAQPS EMAD SCG/Reverberatory Furnace #1
Source Location: Steele, Alabama
Sampling Location: Furnace #1 Baghouse Inlet Duct (CS3)
Date: 02/10/99 For Run Numbers: 1-2
Dimensions obtained by/from: J. Surman and A. Page
Data recorded by: J. Surman

Port - A

| | | |
|---|---|---|
| Inside of far wall to outside reference point (distance Li): | 42.750 | inches |
| Inside of near wall to outside reference point (distance Lo): | 6.250 | inches |
| Duct inside diameter (Li - Lo): | 36.500 | inches |

Port - B

| | | |
|---|---|---|
| Inside of far wall to outside reference point (distance Li): | 44.500 | inches |
| Inside of near wall to outside reference point (distance Lo). | 6.313 | inches |
| Duct inside diameter (Li - Lo). | 38.187 | inches |
| Nearest flow disturbance upstream from ports: | 672 | inches, ( 17.6 D ) |
| Nearest flow disturbance downstream from ports: | 204 | inches, ( 5.3 D ) |
| Minimum number of points for velocity (nonparticulate) traverses | 12 | |
| Minimum number of points for particulate traverses: | 12 | |

Port - B

| | | |
|---|---|---|
| Inside diameter of the duct | 38.19 | inches |
| Number of traverse points to be used on a diameter: | 6 | |
| Length of port from reference point to inside surface of duct. | 6.31 | inches |
| Cross sectional area of sampling location. | 7.606 | ft² |

Port - B

| Traverse Point | Percent of Duct Diameter from Wall to Traverse Point | Distance from Reference Point to Traverse Point, inches |
|---|---|---|
| 1 | 4.4% | 7.98 |
| 2 | 14.6% | 11.91 |
| 3 | 29.6% | 17.61 |
| 4 | 70.4% | 33.20 |
| 5 | 85.4% | 38.91 |
| 6 | 95.6% | 42.84 |

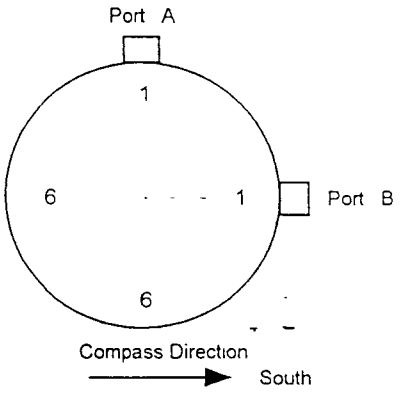


Horizontal Duct - Flow Away From Observer

Comments:

# 40 CFR 60, APPENDIX A, METHOD 1 - LOCATION OF TRAVERSE POINTS IN A CIRCULAR DUCT

MRI Project No 4951 03 04 01
Client/Source: U.S. EPA OAQPS EMAD SCG/Reverberatory Furnace #1
Source Location: Steele, Alabama
Sampling Location Furnace #1 Baghouse Outlet Stack (CS4)
Date: 02/10/99 For Run Numbers 1-2
Dimensions obtained by/from: J Surman and D. Alburty
Data recorded by: J. Surman

Port - A

| | | |
|---|---|---|
| Inside of far wall to outside reference point (distance Li) | 52 875 | inches |
| Inside of near wall to outside reference point (distance Lo): | 6 875 | inches |
| Duct inside diameter (Li - Lo) | 46.000 | inches |

Port - B

| | | |
|---|---|---|
| Inside of far wall to outside reference point (distance Li): | 52 625 | inches |
| Inside of near wall to outside reference point (distance Lo). | 6 938 | inches |
| Duct inside diameter (Li - Lo) | 45 687 | inches |
| Nearest flow disturbance upstream from ports: | 240 | inches, ( 5 2 D ) |
| Nearest flow disturbance downstream from ports | 108 | inches, ( 2 3 D ) |
| Minimum number of points for velocity (nonparticulate) traverses | 16 | |
| Minimum number of points for particulate traverses | 20 | |

Port - A

| | | |
|---|---|---|
| Inside diameter of the duct: | 46 00 | inches |
| Number of traverse points to be used on a diameter | 12 | |
| Length of port from reference point to inside surface of duct | 6 88 | inches |
| Cross sectional area of sampling location | 11 463 | ft² |

Port - A

| Traverse Point | Percent of Duct Diameter from Wall to Traverse Point | Distance from Reference Point to Traverse Point, inches |
|---|---|---|
| 1 | 2.2% | 7.88 |
| 2 | 6 7% | 9 96 |
| 3 | 11.8% | 12 31 |
| 4 | 17 7% | 15 03 |
| 5 | 25 0% | 18 38 |
| 6 | 35 6% | 23 24 |
| 7 | 64 4% | 36 51 |
| 8 | 75 0% | 41 38 |
| 9 | 82.3% | 44.72 |
| 10 | 88.2% | 47 44 |
| 11 | 93 3% | 49 79 |
| 12 | 97.8% | 51 88 |

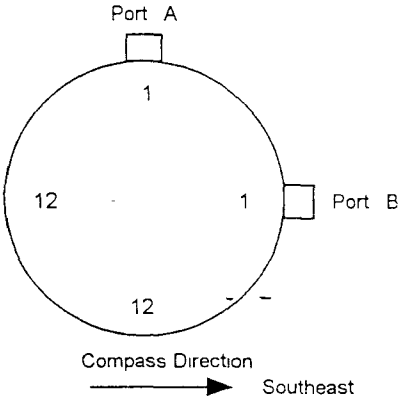


Vertical Duct - Top View

Comments:

## 40 CFR 60, APPENDIX A, METHOD 1 - LOCATION OF TRAVERSE POINTS IN A CIRCULAR DUCT

MRI Project No 4951 03 04 01
Client/Source: U S. EPA OAQPS EMAD SCG/Reverberatory Furnace #1
Source Location Steele, Alabama
Sampling Location Furnace #1 Baghouse Outlet Stack (CS4)
Date. 02/10/99 For Run Numbers. 1-2
Dimensions obtained by/from. J. Surman and D Alburty
Data recorded by. J. Surman

Port - A

| | | |
|---|---|---|
| Inside of far wall to outside reference point (distance Li) | 52.875 | inches |
| Inside of near wall to outside reference point (distance Lo): | 6 875 | inches |
| Duct inside diameter (Li - Lo): | 46 000 | inches |

Port - B

| | | |
|---|---|---|
| Inside of far wall to outside reference point (distance Li). | 52.625 | inches |
| Inside of near wall to outside reference point (distance Lo): | 6 938 | inches |
| Duct inside diameter (Li - Lo): | 45 687 | inches |
| Nearest flow disturbance upstream from ports. | 240 | inches, ( 5 3 D ) |
| Nearest flow disturbance downstream from ports | 108 | inches, ( 2 4 D ) |
| Minimum number of points for velocity (nonparticulate) traverses: | 16 | |
| Minimum number of points for particulate traverses | 20 | |

Port - B

| | | |
|---|---|---|
| Inside diameter of the duct: | 45 69 | inches |
| Number of traverse points to be used on a diameter | 12 | |
| Length of port from reference point to inside surface of duct: | 6 94 | inches |
| Cross sectional area of sampling location | 11 463 | ft² |

Port - B

| Traverse Point | Percent of Duct Diameter from Wall to Traverse Point | Distance from Reference Point to Traverse Point, inches |
|---|---|---|
| 1 | 2.2% | 7 94 |
| 2 | 6 7% | 10 00 |
| 3 | 11.8% | 12 33 |
| 4 | 17 7% | 15 04 |
| 5 | 25 0% | 18 36 |
| 6 | 35.6% | 23 19 |
| 7 | 64 4% | 36 38 |
| 8 | 75 0% | 41 20 |
| 9 | 82 3% | 44 53 |
| 10 | 88 2% | 47 23 |
| 11 | 93 3% | 49 56 |
| 12 | 97 8% | 51 63 |

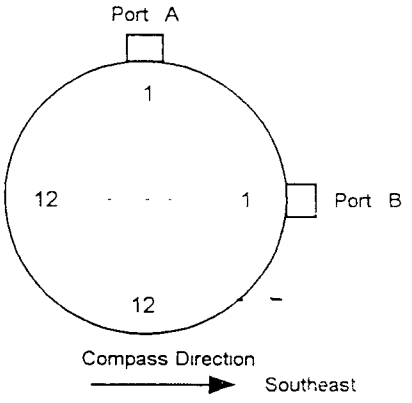


Vertical Duct - Top View

Comments.

## PITOT COEFFICIENT ADJUSTMENTS FOR GAS FLOW INCREASES CAUSED BY PROBE BLOCKAGE DURING SAMPLING IN SMALL ROUND DUCTS

**Sampling Location: Chip Dryer Baghouse Inlet Duct**

| | | | |
|---|---|---|---|
| Duct I.D. | = | 17.69 | in. |
| Duct cross sectional area | = | 245.71 | in.$^2$ |
| Probe sheath O.D., A | = | 2.5 | in. |
| Pitot tube face opening-to-sheath cap distance, B | = | 3 | in. |
| Pitot tube coefficient according to dimensional specification or calibration against standard pitot tube as applicable | = | 0.84 | |
| Theoretical blockage (in.$^2$) = (duct wall at port-to-pitot tube tip distance - B) x A | | | |
| Number of sampling points on a diameter | = | 6 | |

### SAMPLING LOCATION USING ONE TRAIN AT A CROSS SECTIONAL AREA OF THE DUCT

Theoretical blockage (in.$^2$) at each sampling time interval during one half of a run:

| Sampling Point | Interval #1 | Interval #2 | Interval #3 | Interval #4 | Interval #5 | Interval #6 | % of duct diameter from duct wall |
|---|---|---|---|---|---|---|---|
| 1 | 0 | | | | | | 4.4% |
| 2 | | 0.0 | | | | | 14.6% |
| 3 | | | 5.6 | | | | 29.6% |
| 4 | | | | 23.6 | | | 70.4% |
| 5 | | | | | 30.2 | | 85.4% |
| 6 | | | | | | 34.8 | 95.6% |

| | | |
|---|---|---|
| Theoretical average blockage across one diameter | = | 6.39% |
| Decrease in pitot tube coefficient from curve* | = | 4.30% |
| **Average adjusted pitot tube coefficient** | **=** | **0.804** |

* Percentage decrease in pitot coefficient vs percent blockage is taken from the curve in Figure 9b presented in Citation 9 of 40 CFR 60, Appendix A, Method 2

## PITOT COEFFICIENT ADJUSTMENTS FOR GAS FLOW INCREASES CAUSED BY PROBE BLOCKAGE DURING SAMPLING IN SMALL ROUND DUCTS

**Sampling Location: Chip Dryer Baghouse Outlet Stack**

| | | | |
|---|---|---|---|
| Duct I.D. | = | 23.5 | in |
| Duct cross sectional area | = | 433.74 | in ² |
| Probe sheath O.D., A | = | 2.5 | in. |
| Pitot tube face opening-to-sheath cap distance, B | = | 3 | in. |
| Pitot tube coefficient according to dimensional specification or calibration against standard pitot tube as applicable | = | 0.84 | |
| Theoretical blockage (in.²) | = | (duct wall at port-to-pitot tube tip distance - B) x A | |
| Number of sampling points on a diameter | = | 12 | |

### SAMPLING LOCATION USING ONE TRAIN AT A CROSS SECTIONAL AREA OF THE DUCT

Theoretical blockage (in.²) at each sampling time interval during one half of a run:

| Sampling Point | Interval #1 | Interval #2 | Interval #3 | Interval #4 | Interval #5 | Interval #6 | Interval #7 | Interval #8 | Interval #9 | Interval #10 | Interval #11 | Interval #12 | % of duct diameter from duct wall |
|---|---|---|---|---|---|---|---|---|---|---|---|---|---|
| 1 | 0 | | | | | | | | | | | | 2 1% |
| 2 | | 0.0 | | | | | | | | | | | 6.7% |
| 3 | | | 0.0 | | | | | | | | | | 11.8% |
| 4 | | | | 2.9 | | | | | | | | | 17.7% |
| 5 | | | | | 7.2 | | | | | | | | 25 0% |
| 6 | | | | | | 13.4 | | | | | | | 35 6% |
| 7 | | | | | | | 30.4 | | | | | | 64.4% |
| 8 | | | | | | | | 36.6 | | | | | 75 0% |
| 9 | | | | | | | | | 40.8 | | | | 82 3% |
| 10 | | | | | | | | | | 44.3 | | | 88 2% |
| 11 | | | | | | | | | | | 47.3 | | 93 3% |
| 12 | | | | | | | | | | | | 50.0 | 97.9% |

| | | |
|---|---|---|
| Theoretical average blockage across one diameter | = | 5.24% |
| Decrease in pitot tube coefficient from curve* | = | 3.17% |
| **Average adjusted pitot tube coefficient** | = | **0.813** |

* Percentage decrease in pitot coefficient vs percent blockage is taken from the curve in Figure 9b presented in Citation 9 of 40 CFR 60, Appendix A, Method 2

## PITOT COEFFICIENT ADJUSTMENTS FOR GAS FLOW INCREASES CAUSED BY PROBE BLOCKAGE DURING SAMPLING IN SMALL ROUND DUCTS

**Sampling Location: Reverberatory Furnace #1 Baghouse Inlet Duct**

| | | | |
|---|---|---|---|
| Duct I.D | = | 37.34 | in |
| Duct cross sectional area | = | 1095 27 | in.² |
| Probe sheath O.D., A | = | 2.5 | in. |
| Pitot tube face opening-to-sheath cap distance, B | = | 3 | in. |
| Pitot tube coefficient according to dimensional specification or calibration against standard pitot tube as applicable | = | 0.84 | |
| Theoretical blockage (in.²) = (duct wall at port-to-pitot tube tip distance - B) x A | | | |
| Number of sampling points on a diameter | = | 6 | |

### SAMPLING LOCATION USING ONE TRAIN AT A CROSS SECTIONAL AREA OF THE DUCT

Theoretical blockage (in.²) at each sampling time interval during one half of a run:

| Sampling Point | Interval #1 | Interval #2 | Interval #3 | Interval #4 | Interval #5 | Interval #6 | % of duct diameter from duct wall |
|---|---|---|---|---|---|---|---|
| 1 | 0 | | | | | | 4.4% |
| 2 | | 6.2 | | | | | 14.6% |
| 3 | | | 20.1 | | | | 29.6% |
| 4 | | | | 58.2 | | | 70.4% |
| 5 | | | | | 72.2 | | 85.4% |
| 6 | | | | | | 81.8 | 95.6% |

| | | |
|---|---|---|
| Theoretical average blockage across one diameter | = | 3.63% |
| Decrease in pitot tube coefficient from curve* | = | 1.60% |
| **Average adjusted pitot tube coefficient** | = | **0.827** |

* Percentage decrease in pitot coefficient vs percent blockage is taken from the curve in Figure 9b presented in Citation 9 of 40 CFR 60, Appendix A, Method 2

## PITOT COEFFICIENT ADJUSTMENTS FOR GAS FLOW INCREASES CAUSED BY PROBE BLOCKAGE DURING SAMPLING IN SMALL ROUND DUCTS

**Sampling Location: Reverberatory Furnace #1 Baghouse Outlet Stack**

| | | | |
|---|---|---|---|
| Duct I D | = | 45 84 | in |
| Duct cross sectional area | = | 1,650 61 | in ² |
| Probe sheath O.D , A | = | 2.5 | in. |
| Pitot tube face opening-to-sheath cap distance, B | = | 3 | in. |
| Pitot tube coefficient according to dimensional specification or calibration against standard pitot tube as applicable | = | 0.84 | |
| Theoretical blockage (in ²) = (duct wall at port-to-pitot tube tip distance - B) x A | | | |
| Number of sampling points on a diameter | = | 12 | |

### SAMPLING LOCATION USING ONE TRAIN AT A CROSS SECTIONAL AREA OF THE DUCT

Theoretical blockage (in.²) at each sampling time interval during one half of a run.

| Sampling Point | Interval #1 | Interval #2 | Interval #3 | Interval #4 | Interval #5 | Interval #6 | Interval #7 | Interval #8 | Interval #9 | Interval #10 | Interval #11 | Interval #12 | % of duct diameter from duct wall |
|---|---|---|---|---|---|---|---|---|---|---|---|---|---|
| 1 | 0 | | | | | | | | | | | | 2.2% |
| 2 | | 0.2 | | | | | | | | | | | 6.7% |
| 3 | | | 6.0 | | | | | | | | | | 11.8% |
| 4 | | | | 12.8 | | | | | | | | | 17.7% |
| 5 | | | | | 21.2 | | | | | | | | 25.0% |
| 6 | | | | | | 33.3 | | | | | | | 35.6% |
| 7 | | | | | | | 66.3 | | | | | | 64 4% |
| 8 | | | | | | | | 78.5 | | | | | 75.0% |
| 9 | | | | | | | | | 86 8 | | | | 82 3% |
| 10 | | | | | | | | | | 93.6 | | | 88 2% |
| 11 | | | | | | | | | | | 99.4 | | 93 3% |
| 12 | | | | | | | | | | | | 104 6 | 97 8% |

| | | |
|---|---|---|
| Theoretical average blockage across one diameter | = | 3.04% |
| Decrease in pitot tube coefficient from curve* | = | 1 03% |
| **Average adjusted pitot tube coefficient** | = | **0.831** |

* Percentage decrease in pitot coefficient vs percent blockage is taken from the curve in Figure 9b presented in Citation 9 of 40 CFR 60, Appendix A, Method 2

# FIELD SAMPLING DATA FOR METHOD 5 TYPE TRAINS



Run No. 1 Date 2-9-99
Project No. 4951-03-04-01
Client US EPA
Source CHIP DRYER
Sampling Location CHIP DRYER INLET
Train Type/No. IN-1
Operator D. NEAL
Record data every 7.5 minutes
Nozzle No. IN-1 Type: quartz
Nozzle Tip Diameter 0.191 in
Pitot Tube No. M-103 $C_p$ ~~.805~~ 0.804

Stack Thermocouple No. 36-10
Probe No. 3-4 Length: 3' ft
Liner Type 3' GLASS Heated? (Y) n
12' TEFLON JUMPER
Sample Box No. 012001
Filter No. N/A
Umbilical/Impinger Hookup UH-32
Umbilical Nos. N-175-3
Meter Box No. NS
Temp. Controller No. NS
Temp. Meter No. NS
DGM Correction (Y) 1.038

Orifice Meter ΔH@ 2.077
Barometer No. X-4029
Barometric Pressure 29.52 in Hg
Elevation to Meter Box 0 ft
Meter Box $P_{bar}$ 29.52 in Hg
Elevation to Sampling Loc. 0 ft
Sampling Location $P_{bar}$ 29.52 in Hg
Static Pressure -6.0 in $H_2O$
Assumed Moisture 6.920 %
Assumed $\%CO_2$ 0.5 $\%O_2$ 20.0

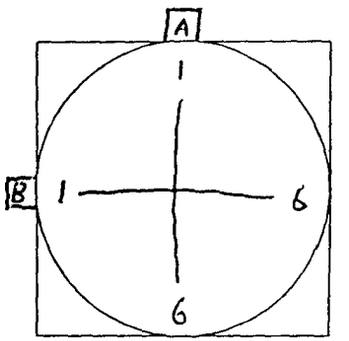


FLOW GOING AWAY FROM OBSERVER
Traverse Point Layout

**Pitot Tube Pressure Measurement System Leak Checks**

| | Initial | Final | Initial | Final | Initial | Final | Initial | Final | Initial | Final |
|---|---|---|---|---|---|---|---|---|---|---|
| Time (24 Hr) | 0805 | ~~11:49~~ 1352 DN 2-9-99 | | | | | | | | |
| Pass or Fail | | PASS | | | | | | | | |

**Sampling Train Leak Checks**

| | Initial | Final | Initial | Final | Initial | Final | Initial | Final | Initial | Final |
|---|---|---|---|---|---|---|---|---|---|---|
| Time (24 Hr) | 10:00 | 11:49 | 12:01 | 1355 | | | | | | |
| Vacuum, in Hg | 15" HG | 19.5" HG | 15" HG | 13" HG. | | | | | | |
| Leak Rate, cfm | .005 | .003 | .004 | .003 | | | | | | |
| Final Meter Volume | | 822.911 | | | | | | | | |
| Initial Meter Volume | | 822.583 | | | | | | | | |
| Leak Check Volume | | 0.328 | | | | | | | | |

**Remarks and Notes:**

Meter Volume at Start of Run 759.667
Meter Volume at End of Run 886.535
Total Leak Check Volume 0.328
Adjusted Final Volume 886.207

Run No. 1 Date 2-9-99 Sampling Location CHIP DRYER INLET page 1 of 1

Train Type/No. IN-1 Project No. 4951-03-04-01 Operator D. NEAL

| Traverse Point | Sampling Time, min. | Clock Time (24-Hr) | Dry Gas Meter Reading ($V_m$), $ft^3$ Initial 759.667 Desired | Actual | Velocity Head ($\Delta p$), in. $H_2O$ | Orifice Pressure Differential ($\Delta H$), in. $H_2O$ Desired | Actual | Stack Temp. ($t_s$), °F | Dry Gas Meter Temperature ($t_m$), °F Inlet | Outlet | Pump Vacuum, in. Hg | Silica Gel Impinger Outlet Temp., °F | Probe Liner Outlet Temp., °F | Filter Holder Temp., °F | XAD Cartdg Inlet Temp., °F | Heated Line |
|---|---|---|---|---|---|---|---|---|---|---|---|---|---|---|---|---|
| | 0.0 | 1015 | | | | | | | | | | | | | | |
| A-6 | 7.5 | 1022.5 | 765.389 | 765.565 | 2.1 | 2.22 | 2.25 | 176 | 60 | 60 | 9.5 | 44 | 252 | 248 | 45 | 245 |
| 6 | 15 | 1030 | 771.048 | 771.065 | 2.1 | 2.22 | 2.10 | 173 | 64 | 61 | 9.0 | 43 | 247 | 254 | 43 | 242 |
| - 5 | 22.5 | 1037.5 | 776.869 | 779.060 | 2.15 | 2.30 | 2.30 | 168 | 67 | 62 | 10.0 | 42 | 245 | 255 | 43 | 264 |
| 5 | 30 | 1045 | 782.690 | 783.025 | 2.15 | 2.29 | 2.25 | 173 | 70 | 63 | 10.0 | 44 | 233 | 255 | 44 | 258 |
| - 4 | 37.5 | 1052.5 | 788.464 | 788.815 | 2.1 | 2.25 | 2.10 | 173 | 73 | 64 | 10.5 | 47 | 248 | 253 | 45 | 242 |
| 4 | 45 | 1100 | 794.194 | 794.570 | 2.05 | 2.21 | 2.00 | 171 | 74 | 66 | 10.5 | 49 | 248 | 254 | 45 | 259 |
| - 3 | 52.5 | 1107.5 | 799.605 | 799.930 | 1.85 | 1.96 | 1.80 | 181 | 75 | 67 | 10.5 | 48 | 246 | 259 | 46 | 245 |
| 3 | 60 | 1115 | 805.004 | 805.170 | 1.85 | 1.95 | 1.80 | 185 | 75 | 68 | 10.0 | 47 | 245 | 252 | 47 | 240 |
| - 2 | 67.5 | 1122.5 | 808.867 | 809.285 | 0.93 | 1.00 | 0.98 | 176 | 76 | 69 | 7.5 | 47 | 246 | 252 | 54 | 255 |
| 2 | 75 | 1130 | 812.740 | 813.325 | 0.91 | 1.00 | 0.97 | 160 | 76 | 70 | 7.5 | 46 | 244 | 254 | 50 | 242 |
| - 1 | 82.5 | 1137.5 | 817.507 | 817.935 | 1.40 | 1.52 | 1.40 | 171 | 76 | 71 | 9.0 | 47 | 250 | 253 | 50 | 250 |
| 1 | 90 | 1145 | 822.271 | 822.583 | 1.40 | 1.51 | 1.30 | 174 | 77 | 72 | 9.0 | 48 | 244 | 251 | 51 | 247 |
| | | | | | | | | | | | | | | | | |
| | 0.0 | 1215 | 822.911 | | | | | | | | | | | | | |
| B-1 | 7.5 | 1222.5 | 827.897 | 827.820 | 1.55 | 1.66 | 1.50 | 175 | 72 | 72 | 10.0 | 45 | 247 | 253 | 63 | 247 |
| 1 | 15 | 1230 | 832.988 | 832.998 | 1.6 | 1.73 | 1.65 | 171 | 74 | 72 | 11.5 | 44 | 246 | 253 | 47 | 252 |
| - 2 | 22.5 | 1237.5 | 838.155 | 838.135 | 1.65 | 1.78 | 1.65 | 174 | 76 | 72 | 11.5 | 49 | 244 | 256 | 49 | 246 |
| 2 | 30 | 1245 | 843.355 | 843.485 | 1.65 | 1.80 | 1.75 | 172 | 79 | 74 | 12.5 | 51 | 249 | 256 | 49 | 249 |
| - 3 | 37.5 | 1252.5 | 848.691 | 848.865 | 1.75 | 1.89 | 1.75 | 180 | 81 | 75 | 12.5 | 49 | 247 | 253 | 49 | 245 |
| 3 | 45 | 1300 | 854.067 | 854.170 | 1.75 | 1.91 | 1.70 | 173 | 82 | 76 | 12.0 | 47 | 246 | 254 | 49 | 253 |
| - 4 | 52.5 | 1307.5 | 859.426 | 859.500 | 1.75 | 1.90 | 1.70 | 177 | 82 | 76 | 12.0 | 46 | 250 | 253 | 48 | 252 |
| 4 | 60 | 1315 | 864.757 | 864.840 | 1.75 | 1.88 | 1.75 | 186 | 83 | 77 | 12.5 | 46 | 243 | 263 | 49 | 255 |
| - 5 | 67.5 | 1322.5 | 870.195 | 870.215 | 1.80 | 1.95 | 1.75 | 181 | 84 | 78 | 12.5 | 46 | 248 | 254 | 48 | 244 |
| 5 | 75 | 1330 | 875.652 | 875.655 | 1.80 | 1.96 | 1.80 | 179 | 85 | 79 | 13.0 | 46 | 248 | 252 | 49 | 242 |
| - 6 | 82.5 | 1337.5 | 881.126 | 881.100 | 1.80 | 1.97 | 1.80 | 176 | 85 | 80 | 13.0 | 45 | 244 | 252 | 47 | 253 |
| 6 | 90 | 1345 | 886.610 | 886.535 | 1.80 | 1.97 | 1.80 | 174 | 85 | 80 | 13.0 | 42 | 248 | 253 | 47 | 258 |

Remarks and Notes:

# 40 *CFR* 60, APPENDIX A, METHOD 3B
# INTEGRATED GAS SAMPLING DATA

Run No. 1 Date 2-9-99 Client/Source US EPA / CHIP DRYER
Project No. 4951-03-04-01 Sampling Location CHIP DRYER INLET
Sample Type (Multi-Point, Single-Point) Operator D. NEAL
Flow Control Device (Valve, Critical Orifice) Bag Type MYLAR Sample No. 1005
Method 5 Meter Box No. N5 Method 3B Train No. N/A
M3B Pump Type ~~Rotameter~~ Diaphram M3B Flow Meter Type ~~Alpha~~ Rotameter
M3B Pump No. N5 M3B Flow Meter No. ~~Alpha~~ N-5
Desired Sampling Rate 200 cc/min
Leak Check Before Sampling PASS After Sampling PASS
Total Sampling Time 90 min Average Flow Meter Reading 2.0
Flow Rate, cc/min: Average 200 Highest 200 Lowest 200
Estimated Total Sample Volume 18 liters

| Time (24-Hr) | Flow Meter Reading | Start Purge | Start Sampling | Stop Sampling | Sampling | Remarks and Notes |
|---|---|---|---|---|---|---|
| 1015 | 2.0 | 1015 | 1016 | | ✓ | |
| | 2-9-99 DN | ~~4~~ | 11:45 | | | STOP SAMPLING PORT CHANGE |
| | 2-9-99 DN | ~~1215~~ | | | | ~~RESUME SAMPLING AFTER PORT CHANGE~~ |
| | | | | | | CHANGED ORSAT BAGS AT PORT |
| | | | | | | CHANGE DUE TO LEAK IN BAG. |
| 1215 | 2.0 | 1215 | 1216 | | ✓ | |
| | | | | 1345 | | END OF RUN |

M3BSAMP.WPD June 18, 1998

## 40 *CFR* 60, APPENDIX A, METHOD 3B, GAS ANALYSIS BY ORSAT

Run No. NA Date 02/09/99

Project No. 4951.03.04.01 Sample No. NA

Sampling Location Trailer – Ambient Air

Analysis Start Time 1505

Sample Type (Bag, Grab) Grabs

Analyst J. Surmon

Orsat Leak Check Before Analysis:

Burrete No Change in 4 Minutes

Pipettes No Change in 4 Minutes

Orsat Leak Check After Analysis:

Burrete No Change in 4 Minutes

Pipettes No Change in 4 Minutes

| Analysis | 1 | | 2 | | 3 | | Average Net Value (% v/v) |
|---|---|---|---|---|---|---|---|
| Gas | Actual Reading | Net Value | Actual Reading | Net Value | Actual Reading | Net Value | |
| $CO_2$ | 1 0.0<br>2 0.0<br>3 | 0.0 | 1 0.0<br>2 0.0<br>3 | 0.0 | 1<br>2<br>3 | | 0.0 |
| $O_2$ (Net is actual reading minus actual $CO_2$ reading) | 1 20.9<br>2 20.9<br>3 | 20.9 | 1 20.9<br>2 20.9<br>3 | 20.9 | 1<br>2<br>3 | | 20.9 |
| CO (Net is actual reading minus actual $O_2$ reading) | 1<br>2<br>3 | | 1<br>2<br>3 | | 1<br>2<br>3 | | |

Acceptance Criteria per Method 3B

$CO_2$ >4% 0.3% v/v

≤4% 0.2% v/v

$O_2$ ≥15% 0.2% v/v

<15% 0.3% v/v

CO 0.3% v/v

Remarks and Notes:

## 40 *CFR* 60, APPENDIX A, METHOD 3B, GAS ANALYSIS BY ORSAT

Run No. 1 Date 02/09/99
Project No. 4951.03.04.01 Sample No. 1005
Sampling Location Chip Dryer Baghouse Inlet Duct
Analysis Start Time 1605
Sample Type (Bag, Grab) Bag
Analyst J. Surman

Orsat Leak Check Before Analysis:
Burrete No Change in 4 Minutes
Pipettes No Change in 4 Minutes
Orsat Leak Check After Analysis:
Burrete No Change in 4 Minutes
Pipettes No Change in 4 Minutes

| Analysis | 1 | | 2 | | 3 | | Average Net Value (% v/v) |
|---|---|---|---|---|---|---|---|
| Gas | Actual Reading | Net Value | Actual Reading | Net Value | Actual Reading | Net Value | |
| $CO_2$ | 1 1.0<br>2 1.0<br>3 | 1.0 | 1 1.0<br>2 1.0<br>3 | 1.0 | 1 1.0<br>2 1.0<br>3 | 1.0 | 1.0 |
| $O_2$ (Net is actual reading minus actual $CO_2$ reading) | 1 20.4<br>2 20.4<br>3 | 19.4 | 1 20.4<br>2 20.4<br>3 | 19.4 | 1 20.4<br>2 20.4<br>3 | 19.4 | 19.4 |
| CO (Net is actual reading minus actual $O_2$ reading) | 1<br>2<br>3 | | 1<br>2<br>3 | | 1<br>2<br>3 | | |

Acceptance Criteria per Method 3B

| | | | | | | | |
|---|---|---|---|---|---|---|---|
| $CO_2$ | >4% | 0.3% v/v | $O_2$ | ≥15% | 0.2% v/v | CO | 0.3% v/v |
| | ≤4% | 0.2% v/v | | <15% | 0.3% v/v | | |

Remarks and Notes:

4951.03 Culp Al 1005
M0010 ORSAT BAG
SCRAP DRYER BH INLET SAMPLE
For disposal call: J.SURMAN
MIDWEST RESEARCH INSTITUTE

SW-846, METHOD 0010 - MODIFIED SEMIVOLATILE ORGANICS TRAIN (M0010)
FOR POM AND PAHs
FIELD LABORATORY TRAIN SET-UP DATA

MRI Project No. 4951.03.04.01
Client/Source: U.S. EPA OAQPS EMAD SCG / Chip Dryer
Source Location: Steele, Alabama
Sampling Location: Chip Dryer Baghouse Inlet Duct

Run No. 1 Sampling Train No. IN-1 Sample Box No. 12001
Set-up person(s): J. Surman Date: 02-09-99
Transfer to Sampler:
Relinquished By J. Surman Received By A. Page Date/Time 02-09-99 0645

| TRAIN COMPONENT | COMPONENT NO. | | LOADING DATA | | |
|---|---|---|---|---|---|
| | | | | Initial Weights (grams)** | |
| | | | | Empty | Loaded |
| Sampling Nozzle (Quartz) | IN-1 | * | | | |
| Probe (Liner-Glass) | | * | | | |
| Female Probe Outlet Blank-Off | | | | | |
| Heated Coupling & Teflon® STL | | * | | | |
| 90° Bypass | | * or | | | |
| ~~Cyclone~~ | | * and | | | |
| ~~Flask~~ | | | | | |
| Filter Holder Front | | | | | |
| Filter Holder Back with Teflon®-coated 316 SS Filter Support | | | Filter Type: Whatman QM-A | | |
| Short 90° Connector | | | | | |
| Condenser (Standard) | | | Thermocouple No. XAD-4 | 499.4 | *** |
| XAD-2 Resin Cartridge (Standard) | | | ~65 grams XAD-2 Resin + Surrogates | ~~495.6~~ ~~486.7~~ | |

*(Documentation of standards injection is separate)*; resin spiked on 02-04-99 and maintained near 4°C until use.

| | | | | |
|---|---|---|---|---|
| 1st Impinger (Mod-GBS) | | Empty | 459.6 | |
| U-Connector (A) | | | | |
| 2nd Impinger (Mod-GBS) | | 100 mLs | 469.1 | 568.8 |
| U-Connector (B) | | ASTM Type II Water | | |
| 3rd Impinger (GBS) | | 100 mLs | 472.7 | 572.1 |
| U-Connector (C) | | ASTM Type II Water | | |
| 4th Impinger (Mod-GBS) | | Empty | 453.2 | |
| U-Connector (D) | | | | |
| 5th Impinger (Mod-GBS) | | ~200 g indicating silica gel | | 654.9 |
| U-Connector (E) | | | | |
| 6th Impinger (Mod-GBS) | | ~200 g indicating silica gel | | 703.3 |
| Impinger Outlet Connector | UH-32 | | | |

* Before and after sampling: Nozzle openings covered with methanol/methylene chloride-rinsed aluminum foil, and nozzle placed in Ziploc® bag. Probe liner outlet sealed with glass female blank-off, and inlet sealed with Teflon® plug. Cyclone/Bypass inlet covered (not sealed) with methanol/methylene chloride-rinsed aluminum foil. Sample transfer line (STL) openings joined with glass/Teflon® coupling used at filter holder outlet during sampling.

** Initial weights of additional components exchanged during the run also entered here. All exchange component openings covered with methanol/methylene chloride-rinsed aluminum foil or as described above.

*** Cartridge weighed with blank-offs in place; then, cartridge covered with aluminum foil to seal out light during storage and sampling.

Component Changes after Set-up and before Recovery and Other Comments:

SW-846, METHOD 0010 - MODIFIED SEMIVOLATILE ORGANICS TRAIN (M0010)
FOR POM AND PAHs
FIELD LABORATORY SAMPLE RECOVERY DATA

MRI Project No. 4951.03.04.01
Client/Source: U.S. EPA OAQPS EMAD SCG / Chip Dryer
Source Location: Steele, Alabama
Sampling Location: Chip Dryer Baghouse Inlet Duct

Run No. 1 Sampling Train No. IN-1 Sample Box No. 12001
Transfer for Recovery:
Relinquished By A. Page Received By J. Surman Date/Time 02-09-99 1430
Sample box recovery person(s): J. Surman Date: 02-09-99
Probe/STL recovery person(s): D. Neel, D. Albury, D. Griffin, A. Page Date: 02-09-99
Weights below are in grams.

RESIN CARTRIDGE AND IMPINGERS RECOVERY

| Impinger: | XAD-2 Cartridge* | 1st | 2nd | 3rd | 4th | 5th | 6th |
|---|---|---|---|---|---|---|---|
| Final Wt. | 487.9 | 575.8 | 570.3 | 579.5 | 457.4 | 678.1 | 720.9 |
| Initial Wt. | 499.4 | 459.6 | 568.8 | 572.1 | 453.2 | 654.9 | 703.3 |
| Net Wt. | -11.5 | 116.2 | 1.5 | 7.4 | 4.2 | 23.2 | 17.6 |

[ Total Condensate Collected: 158.6 grams]

| Description and/or color: | white | clear | clear | clear | clear | 10 | 30 |
|---|---|---|---|---|---|---|---|
| Sample Recovery: | Cartridge* | 1st Impinger | → → → → Dispose of properly ← ← ← ← | | | % Blue | |

Sample Number: 1003 1004
Sample Bottle Tare Wt. 496.7
Transfer impinger contents only (i.e., do not add component rinses to this sample).

Sample Bottle Final Wt. 811.3
Net Sample Wt. 314.6
Components Rinsed**: 1st impinger; combine rinses with train rinses below (sample number XX001)

FILTER RECOVERY AND TRAIN RINSES

FILTER:
Sample Number: 1002 Description/Color: blackish gray

TRAIN RINSES:
Sample Number: 1001
Sample Bottle Tare Wt. 494.8
Components Rinsed***: Front -- nozzle, probe liner, coupling and sample transfer line, bypass, ~~cyclone/flask~~, filter holder front;
Back -- filter support, filter holder back, short 90° connector, condenser

Sample Bottle Final Wt. 1286.8
Net Sample Wt. 792.0

* Replace blank-offs and remove aluminum foil, then weigh the cartridge; replace aluminum foil to cover the entire cartridge.
** Methanol/methylene chloride (1:1 v/v) rinses 3 times; add rinses to train rinses (sample number XX001).
*** Methanol/methylene chloride (1:1 v/v) rinses with brushing of front components 3 times or more until perceivably clean, and methanol/methylene chloride (1:1 v/v) rinses of back components 3 times, but without brushing, and including 5-minute soaks of underlined components 3 times.

COMMENTS:

# FIELD SAMPLING DATA FOR METHOD 5 TYPE TRAINS



Run No. 1 Date 2-9-99
Project No. 4951-03
Client Culp (US EPA)
Source Chipper Dryer Outlet
Sampling Location Stack
Train Type/No. M0010 SV OUT-1
Operator Griffin
Record data every 7.5 minutes
Nozzle No. OUT-1 Type: Quartz
Nozzle Tip Diameter 0.234 in
Pitot Tube No. ~~M-104~~ 136 $C_p$ ~~.846~~ 0.814

Stack Thermocouple No. 36-11
Probe No. 3-1 Length: 3 ft
Liner Type Glass Heated? (Y) n
Sample Box No. Out-1 10
Filter No. NA
Umbilical/Impinger Hookup UH-34
Umbilical Nos. N 50-4
Meter Box No. N-1
Temp. Controller No. N-1
Temp. Meter No. N-1
DGM Correction (Y) 1.019

Orifice Meter ΔH@ 2.113
Barometer No. X4029
Barometric Pressure 29.52 in Hg
Elevation to Meter Box 0 ft
Meter Box $P_{bar}$ 29.52 in Hg
Elevation to Sampling Loc. 26 ft
Sampling Location $P_{bar}$ 29.50 in Hg
Static Pressure -.7 in $H_2O$
Assumed Moisture 3.2 %
Assumed $\%CO_2$ 0.5 $\%O_2$ 19.5

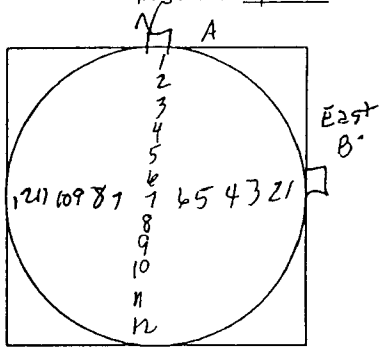


Traverse Point Layout

**Pitot Tube Pressure Measurement System Leak Checks**

| | Initial | Final | Initial | Final | Initial | Final | Initial | Final | Initial | Final |
|---|---|---|---|---|---|---|---|---|---|---|
| Time (24 Hr) | 0843 | 1353 | | | | | | | | |
| Pass or Fail | | PASS | | | | | | | | |

**Sampling Train Leak Checks**

| | Initial | Final | Initial | Final | Initial | Final | Initial | Final | Initial | Final |
|---|---|---|---|---|---|---|---|---|---|---|
| Time (24 Hr) | 0850 | 1148 | 1200 | 1350 | | | | | | |
| Vacuum, in Hg | 15 | 14 | 15 | 11.5 | | | | | | |
| Leak Rate, cfm | .006 | .002 | .011 | .001 | | | | | | |
| Final Meter Volume | | 285.781 | | | | | | | | |
| Initial Meter Volume | | 285.432 | | | | | | | | |
| Leak Check Volume | | .349 | | | | | | | | |

**Remarks and Notes:**

Meter Volume at Start of Run 239.038
Meter Volume at End of Run 340.828
Total Leak Check Volume .349
Adjusted Final Volume 340.479

Run No. 1 Date 2-9-99 Sampling Location Dryer ~~Inlet~~ Outlet (Chipper) page 1 of 1

Train Type/No. SV OUT-1 Project No. 4951-03 Operator Griffin

| Traverse Point | Sampling Time, min. | Clock Time (24-Hr) | Dry Gas Meter Reading ($V_m$), $ft^3$ Initial 239.038 Desired | Actual | Velocity Head ($\Delta p$), in. $H_2O$ | Orifice Pressure Differential ($\Delta H$), in. $H_2O$ Desired | Actual | Stack Temp. ($t_s$), °F | Dry Gas Meter Temperature ($t_m$), °F Inlet | Outlet | Pump Vacuum, in. Hg | Silica Gel Impinger Outlet Temp., °F | Probe Liner Outlet Temp., °F | Filter Holder Temp., °F | XAD Cartdg Inlet Temp., °F | Heated Line °F |
|---|---|---|---|---|---|---|---|---|---|---|---|---|---|---|---|---|
| | 0 | 1015 | | | | | | | | | | | | | | |
| A-1 | 7.5 | 1022.5 | 241.20 | 241.30 | 0.11 | 0.32 | 0.32 | 133 | 60 | 60 | 4 | 53 | 244 | 253 | 52 | NA |
| 2 | 15 | 1030 | 243.33 | 243.77 | 0.11 | 0.31 | 0.31 | 156 | 62 | 61 | 4 | 46 | 246 | 254 | 49 | |
| 3 | 22.5 | 1037.5 | 245.15 | 245.57 | 0.08 | 0.22 | 0.22 | 157 | 64 | 62 | 3 | 48 | 246 | 254 | 49 | |
| 4 | 30 | 1045 | 247.81 | 248.14 | 0.17 | 0.47 | 0.47 | 159 | 65 | 63 | 4 | 47 | 247 | 254 | 49 | |
| 5 | 37.5 | 1052.5 | 249.25 | 249.41 | 0.05 | 0.14 | 0.14 | 160 | 68 | 64 | 3 | 52 | 250 | 253 | 51 | |
| 6 | 45 | 1100 | 250.70 | 250.64 | 0.05 | 0.14 | 0.14 | 160 | 68 | 65 | 3 | 55 | 250 | 254 | 53 | |
| 7 | 52.5 | 1107.5 | 252.52 | 252.55 | 0.08 | 0.22 | 0.22 | 164 | 69 | 67 | 4 | 54 | 244 | 255 | 53 | |
| 8 | 60 | 1115 | 256.24 | 256.48 | 0.33 | 0.92 | 0.92 | 167 | 71 | 68 | 6 | 44 | 241 | 254 | 52 | |
| 9 | 67.5 | 1122.5 | 261.82 | 262.15 | 0.74 | 2.08 | 2.1 | 167 | 74 | 69 | 8 | 42 | 248 | 255 | 48 | |
| 10 | 75 | 1130 | 268.98 | 269.29 | 1.2 | 3.42 | 3.4 | 165 | 80 | 70 | 11.5 | 40 | 243 | 254 | 47 | |
| 11 | 82.5 | 1137.5 | 277.01 | 277.48 | 1.5 | 4.27 | 4.3 | 168 | 83 | 72 | 14 | 41 | 250 | 253 | 49 | |
| 12 | 90 | 1145 | 285.36 | 285.432 | 1.6 | 4.59 | 4.6 | 167 | 87 | 74 | 14 | 43 | 251 | 254 | 49 | |
| | | | | | | | | | | | | | | | | |
| Initial | | 1215 | | 285.781 | | | | | - | | | | | | | |
| B-1 | 97.5 | 1222.5 | 290.67 | 290.43 | .55 | 1.59 | 1.6 | 152 | 74 | 74 | 7 | 51 | 247 | 254 | 51 | NA |
| 2 | 105 | 1230 | 294.92 | 294.88 | .42 | 1.20 | 1.2 | 163 | 77 | 74 | 7 | 43 | 250 | 253 | 52 | |
| 3 | 112.5 | 1237.5 | 298.92 | 299.14 | .37 | 1.06 | 1.05 | 164 | 80 | 75 | 6.5 | 44 | 244 | 254 | 55 | |
| 4 | 120 | 1245 | 301.30 | 301.52 | .13 | 0.37 | 0.37 | 166 | 83 | 77 | 5 | 47 | 248 | 255 | 57 | |
| 5 | 127.5 | 1252.5 | 302.91 | 303.21 | .06 | 0.17 | 0.17 | 169 | 82 | 78 | 4 | 51 | 243 | 256 | 56 | |
| 6 | 135 | 1300 | 304.53 | 304.90 | .06 | 0.17 | 0.17 | 169 | 82 | 79 | 4 | 50 | 247 | 255 | 56 | |
| 7 | 142.5 | 1307.5 | 307.39 | 307.80 | .19 | 0.54 | 0.54 | 169 | 81 | 79 | 5 | 48 | 248 | 255 | 55 | |
| 8 | 150 | 1315 | 312.92 | 313.42 | .70 | 2.00 | 2.0 | 171 | 84 | 81 | 9 | 43 | 243 | 254 | 53 | |
| 9 | 157.5 | 1322.5 | 319.23 | 319.55 | .91 | 2.61 | 2.6 | 171 | 86 | 81 | 9.5 | 45 | 253 | 254 | 51 | |
| 10 | 165 | 1330 | 326.20 | 326.39 | 1.1 | 3.17 | 3.2 | 169 | 89 | 82 | 11 | 47 | 244 | 253 | 51 | |
| 11 | 172.5 | 1337.5 | 333.49 | 333.65 | 1.2 | 3.47 | 3.5 | 168 | 89 | 82 | 11.5 | 48 | 242 | 253 | 51 | |
| 12 | 180 | 1345 | 340.79 | 340.828 | 1.2 | 3.47 | 3.4 | 167 | 90 | 82 | 11.5 | 49 | 242 | 255 | 50 | |

Remarks and Notes:

# 40 *CFR* 60, APPENDIX A, METHOD 3B
# INTEGRATED GAS SAMPLING DATA

Run No. 1 Date 2-9-99 Client/Source Culp (USEPA)
Project No. 4951-03 Sampling Location Chip Dryer Outlet
Sample Type (Multi-Point) Single-Point) Operator Griffin
Flow Control Device (Valve, Critical Orifice) Bag Type Mylar Sample No. 10 10
Method 5 Meter Box No. N-1 Method 3B Train No. ~~Port 1~~ NA
M3B Pump Type Diaphram M3B Flow Meter Type Rotometer
M3B Pump No. N-1 M3B Flow Meter No. 505C N-1
Desired Sampling Rate 200 cc/min
Leak Check Before Sampling 0 After Sampling 0
Total Sampling Time 174 min Average Flow Meter Reading 2.0
Flow Rate, cc/min: Average 200 Highest 200 Lowest 200
Estimated Total Sample Volume 35 liters

| Time (24-Hr) | Flow Meter Reading | Start Purge | Start Sampling | Stop Sampling | Sampling | Remarks and Notes |
|---|---|---|---|---|---|---|
| 1018 | 2.0 | 1015 | 1018 | | | |
| 1030 | 2.0 | | | | ✓ | No Problems |
| 1045 | 2.0 | | | | ✓ | |
| 1100 | 2.0 | | | | ✓ | |
| 1115 | 2.0 | | | | ✓ | |
| 1130 | 2.0 | | | | ✓ | |
| 1145 | 2.0 | | | ✓ | | Port Change |
| 1215 | 2.0 | 1215 | 1218 | | | |
| 1230 | 2.0 | | | | ✓ | |
| 1245 | 2.0 | | | | ✓ | |
| 1300 | 2.0 | | | | ✓ | |
| 1315 | 2.0 | | | | ✓ | |
| 1330 | 2.0 | | | | | |
| 1345 | 2.0 | | | ✓ | | End of Run 1 |
| | | | | | | |
| | | | | | | |
| | | | | | | |
| | | | | | | |
| | | | | | | |
| | | | | | | |
| | | | | | | |
| | | | | | | |
| | | | | | | |
| | | | | | | |
| | | | | | | |
| | | | | | | |

## 40 *CFR* 60, APPENDIX A, METHOD 3B, GAS ANALYSIS BY ORSAT

Run No. 1 Date 02/09/99

Project No. 4951.03.04.01 Sample No. 1010

Sampling Location Chip Dryer Baghouse Outlet Stack

Analysis Start Time 1640

Sample Type (Bag, Grab) Bag

Analyst J. Surman

Orsat Leak Check Before Analysis:

Burrete No Change in 4 Minutes

Pipettes No Change in 4 Minutes

Orsat Leak Check After Analysis:

Burrete No Change in 4 Minutes

Pipettes No Change in 4 Minutes

| Analysis | 1 | | 2 | | 3 | | Average Net Value (% v/v) |
|---|---|---|---|---|---|---|---|
| Gas | Actual Reading | Net Value | Actual Reading | Net Value | Actual Reading | Net Value | |
| $CO_2$ | 1 0.9<br>2 0.9<br>3 | 0.9 | 1 0.9<br>2 0.9<br>3 | 0.9 | 1 0.9<br>2 0.9<br>3 | 0.9 | 0.9 |
| $O_2$ (Net is actual reading minus actual $CO_2$ reading) | 1 20.5<br>2 20.5<br>3 | 19.6 | 1 20.5<br>2 20.5<br>3 | 19.6 | 1 20.5<br>2 20.5<br>3 | 19.6 | 19.6 |
| CO (Net is actual reading minus actual $O_2$ reading) | 1<br>2<br>3 | | 1<br>2<br>3 | | 1<br>2<br>3 | | |

Acceptance Criteria per Method 3B

| | | | | | | | |
|---|---|---|---|---|---|---|---|
| $CO_2$ | >4% | 0.3% v/v | $O_2$ | ≥15% | 0.2% v/v | CO | 0.3% v/v |
| | ≤4% | 0.2% v/v | | <15% | 0.3% v/v | | |

Remarks and Notes:

4951.03 Culp Al 1010
M0010 ORSAT BAG
SCRAP DRYER BH OUTLET SAMPLE
For disposal call: J.SURMAN
MIDWEST RESEARCH INSTITUTE

SW-846, METHOD 0010 - MODIFIED SEMIVOLATILE ORGANICS TRAIN (M0010)
FOR POM AND PAHs
FIELD LABORATORY TRAIN SET-UP DATA

MRI Project No. 4951.03.04.01
Client/Source: U.S. EPA OAQPS EMAD SCG / Chip Dryer
Source Location: Steele, Alabama
Sampling Location: Chip Dryer Baghouse Outlet Stack

Run No. 1 Sampling Train No. OUT-1 Sample Box No. 10
Set-up person(s): J. Surman Date: 02-09-99
Transfer to Sampler:
Relinquished By J. Surman Received By D. Alburty Date/Time 02-09-99 0645

| TRAIN COMPONENT | COMPONENT NO. | LOADING DATA | | |
|---|---|---|---|---|
| | | | Initial Weights (grams)** | |
| | | | Empty | Loaded |
| Sampling Nozzle (Quartz) | OUT-1 * | | | |
| Probe (Liner-Glass) | * | | | |
| Female Probe Outlet Blank-Off | | | | |
| Heated Coupling & Teflon® STL | Not used * | | | |
| 90° Bypass | * or | | | |
| Filter Holder Front | | | | |
| Filter Holder Back with Teflon®-coated 316 SS Filter Support | | Filter Type: Whatman QM-A | | |
| Short 90° Connector | | | | |
| Condenser (Standard) | | Thermocouple No. 91-11 | | *** |
| XAD-2 Resin Cartridge (Standard) | | ~65 grams XAD-2 Resin + Surrogates | | 500.3 |

*(Documentation of standards injection is separate)*; resin spiked on 02-04-99 and maintained near 4°C until use.

| | | | | |
|---|---|---|---|---|
| 1st Impinger (Mod-GBS) | | Empty | 457.2 | |
| U-Connector (A) | | | | |
| 2nd Impinger (Mod-GBS) | | 100 mLs | 474.2 | 573.9 |
| U-Connector (B) | | ASTM Type II Water | | |
| 3rd Impinger (GBS) | | 100 mLs | 496.3 | 596.9 |
| U-Connector (C) | | ASTM Type II Water | | |
| 4th Impinger (Mod-GBS) | | Empty | 455.7 | |
| U-Connector (D) | | | | |
| 5th Impinger (Mod-GBS) | | ~200 g indicating silica gel | | 737.5 |
| U-Connector (E) | | | | |
| 6th Impinger (Mod-GBS) | | ~200 g indicating silica gel | | 674.4 |
| Impinger Outlet Connector | VH-34 | | | |

* Before and after sampling: Nozzle openings covered with methanol/methylene chloride-rinsed aluminum foil, and nozzle placed in Ziploc® bag. Probe liner outlet sealed with glass female blank-off, and inlet sealed with Teflon® plug. Cyclone/Bypass inlet covered (not sealed) with methanol/methylene chloride-rinsed aluminum foil. Sample transfer line (STL) openings joined with glass/Teflon® coupling used at filter holder outlet during sampling.

** Initial weights of additional components exchanged during the run also entered here. All exchange component openings covered with methanol/methylene chloride-rinsed aluminum foil or as described above.

*** Cartridge weighed with blank-offs in place; then, cartridge covered with aluminum foil to seal out light during storage and sampling.

Component Changes after Set-up and before Recovery and Other Comments:

SW-846, METHOD 0010 - MODIFIED SEMIVOLATILE ORGANICS TRAIN (M0010)
FOR POM AND PAHs
FIELD LABORATORY SAMPLE RECOVERY DATA

MRI Project No. 4951.03.04.01
Client/Source: U.S. EPA OAQPS EMAD SCG / Chip Dryer
Source Location: Steele, Alabama
Sampling Location: Chip Dryer Baghouse Outlet Stack

Run No. 1 Sampling Train No. OUT-1 Sample Box No. 10
Transfer for Recovery:
Relinquished By J. Surman Received By D. Alburty Date/Time 02-09-99 1430
Sample box recovery person(s): J. Surman Date: 02-09-99
Probe/STL recovery person(s): D. Nez, D. Alburty, D. Griffin, A. Page Date: 02-09-99
Weights below are in grams.

RESIN CARTRIDGE AND IMPINGERS RECOVERY

| Impinger: | XAD-2 Cartridge* | 1st | 2nd | 3rd | 4th | 5th | 6th |
|---|---|---|---|---|---|---|---|
| Final Wt. | 486.4 | 544.4 | 579.9 | 602.6 | 459.3 | 756.3 | 683.8 |
| Initial Wt. | 500.3 | 457.2 | 573.9 | 596.9 | 455.7 | 737.5 | 674.4 |
| Net Wt. | -13.9 | 87.2 | 6.0 | 5.7 | 3.6 | 18.8 | 9.4 |

[ Total Condensate Collected: 116.8 grams]

| Description and/or color: | white | clear | clear | clear | clear | 10 | 30 |
|---|---|---|---|---|---|---|---|
| Sample Recovery: | Cartridge* | 1st Impinger | →→→→ Dispose of properly ←←←← | | | % Blue | |

Sample Number: 1 008 1 009
Sample Bottle Tare Wt. 496.7
Transfer impinger contents only (i.e., do not add component rinses to this sample).

Sample Bottle Final Wt. 785.0
Net Sample Wt. 288.3
Components Rinsed**: 1st impinger; combine rinses with train rinses below (sample number XX006)

FILTER RECOVERY AND TRAIN RINSES

FILTER:
Sample Number: 1 007 Description/Color: blackish gray

TRAIN RINSES:
Sample Number: 1 006
Sample Bottle Tare Wt. 492.2
Components Rinsed***: Front -- nozzle, probe liner, ~~coupling and sample transfer line~~, bypass, filter holder front; Back -- filter support, filter holder back, short 90° connector, condenser

Sample Bottle Final Wt. 1216.4
Net Sample Wt. 724.2

* Replace blank-offs and remove aluminum foil, then weigh the cartridge; replace aluminum foil to cover the entire cartridge.
** Methanol/methylene chloride (1:1 v/v) rinses 3 times; add rinses to train rinses (sample number XX006).
*** Methanol/methylene chloride (1:1 v/v) rinses with brushing of front components 3 times or more until perceivably clean, and methanol/methylene chloride (1:1 v/v) rinses of back components 3 times, but without brushing, and including 5-minute soaks of underlined components 3 times.

COMMENTS:

# FIELD SAMPLING DATA FOR METHOD 5 TYPE TRAINS



Run No. 2 Date 2-8-99 (Pg)
Project No. 4951-03-04-01
Client US EPA
Source CHIP DRYER
Sampling Location CHIP DRYER INLET
Train Type/No. IN-2
Operator D. NEAL
Record data every 7.5 minutes
Nozzle No. IN-2 Type: QUARTZ
Nozzle Tip Diameter 0.191 in
Pitot Tube No. M-101 $C_p$ ~~.805~~ 0.804

Stack Thermocouple No. 36-12
Probe No. 3-5 Length: 3 ft
Liner Type GLASS w/ 12' TEFLON Heated? (Y) n
Sample Box No. 10285
Filter No. N/A
Umbilical/Impinger Hookup UH-12
Umbilical Nos. N-125-3
Meter Box No. N5
Temp. Controller No. N5
Temp. Meter No. N5
DGM Correction (Y) 1.038

Orifice Meter ΔH@ 2.077
Barometer No. X-4029
Barometric Pressure 29.46 in Hg
Elevation to Meter Box 0 ft
Meter Box $P_{bar}$ 29.46 in Hg
Elevation to Sampling Loc. 0 ft
Sampling Location $P_{bar}$ 29.46 in Hg
Static Pressure -6.0 in $H_2O$
Assumed Moisture 6.920 %
Assumed $\%CO_2$ 0.5 $\%O_2$ 20.0

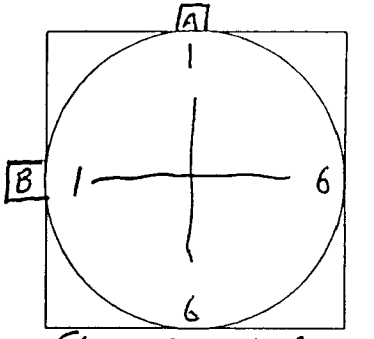


FLOW IS AWAY FROM OBSERVER
Traverse Point Layout

**Pitot Tube Pressure Measurement System Leak Checks**

| | Initial | Final | Initial | Final | Initial | Final | Initial | Final | Initial | Final |
|---|---|---|---|---|---|---|---|---|---|---|
| Time (24 Hr) | 1531 | 1920 | | | | | | | | |
| Pass or Fail | | PASS | | | | | | | | |

**Sampling Train Leak Checks**

DW 2-8-99

| | Initial | Final | Initial | Final | Initial | Final | Initial | Final | Initial | Final |
|---|---|---|---|---|---|---|---|---|---|---|
| Time (24 Hr) | 1535 | 1722 | ~~1923~~ 1735 | 1923 | | | | | | |
| Vacuum, in Hg | 15" HG. | 7.5" HG | 15" HG. | 8" HG. | | | | | | |
| Leak Rate, cfm | .003 | .001 | .002 | .002 | | | | | | |

| | | | | | |
|---|---|---|---|---|---|
| Final Meter Volume | 946.446 | | | | |
| Initial Meter Volume | 946.024 | | | | |
| Leak Check Volume | 0.422 | | | | |

**Remarks and Notes:**

Meter Volume at Start of Run 887.007
Meter Volume at End of Run 1004.995
Total Leak Check Volume 0.422
Adjusted Final Volume 1004.573

Run No. 2 Date 2-9-99 Sampling Location CHIP DRYER ~~STACK~~ Inlet Duct

Train Type/No. IN-2 Project No. 4751-03-04-01 Operator D. Nelson page 1 of 1

| Traverse Point | Sampling Time, min. | Clock Time (24-Hr) | Dry Gas Meter Reading ($V_m$), $ft^3$ Initial 887.007 Desired | Actual | Velocity Head ($\Delta p$), in. $H_2O$ | Orifice Pressure Differential ($\Delta H$), in. $H_2O$ Desired | Actual | Stack Temp. ($t_s$), °F | Dry Gas Meter Temperature ($t_m$), °F Inlet | Outlet | Pump Vacuum, in. Hg | Silica Gel Impinger Outlet Temp., °F | Probe Liner Outlet Temp., °F | Filter Holder Temp., °F | XAD Cartdg Inlet Temp., °F | Heated Line °F |
|---|---|---|---|---|---|---|---|---|---|---|---|---|---|---|---|---|
| | 0 | 1545 | | | | | | | | | | | | | | |
| A-6 | 7.5 | 1552.5 | 892.104 | 892.165 | 1.6 | 1.72 | 1.65 | 180 | 77 | 77 | 7.0 | 59 | 242 | 251 | 53 | 247 |
| 6 | 15 | 1600 | 897.222 | 897.245 | 1.6 | 1.73 | 1.60 | 176 | 78 | 77 | 7.0 | 44 | 247 | 255 | 46 | 255 |
| 5 | 22.5 | 1607.5 | 902.433 | 902.680 | 1.65 | 1.79 | 1.65 | 175 | 80 | 77 | 7.0 | 42 | 246 | 252 | 47 | 252 |
| 5 | 30 | 1615 | 907.651 | 607.405 | 1.65 | 1.79 | 1.60 | 177 | 82 | 78 | 7.0 | 40 | 248 | 253 | 46 | 252 |
| 4 | 37.5 | 1622.5 | 912.770 | 912.510 | 1.55 | 1.69 | 1.60 | 175 | 83 | 78 | 7.5 | 41 | 245 | 252 | 47 | 244 |
| 4 | 45 | 1630 | 917.791 | 917.670 | 1.55 | 1.69 | 1.65 | 177 | 84 | 79 | 7.5 | 42 | 247 | 255 | 45 | 259 |
| 3 | 52.5 | 1637.5 | 922.720 | 922.880 | 1.45 | 1.59 | 1.55 | 173 | 85 | 80 | 7.0 | 42 | 243 | 252 | 45 | 261 |
| 3 | 60 | 1645 | 927.653 | 927.340 | 1.45 | 1.59 | 1.50 | 172 | 85 | 80 | 7.0 | 42 | 247 | 252 | 45 | 259 |
| 2 | 67.5 | 1652.5 | 932.324 | 932.475 | 1.30 | 1.43 | 1.40 | 172 | 85 | 80 | 7.0 | 42 | 246 | 253 | 45 | 240 |
| 2 | 75 | 1700 | 937.004 | 936.830 | 1.30 | 1.43 | 1.35 | 172 | 86 | 81 | 7.0 | 42 | 246 | 253 | 45 | 251 |
| 1 | 82.5 | 1707.5 | 941.507 | 941.415 | 1.20 | 1.33 | 1.30 | 170 | 86 | 81 | 7.0 | 41 | 246 | 253 | 46 | 255 |
| 1 | 90 | 1715 | 946.006 | 946.024 | 1.20 | 1.32 | 1.30 | 171 | 86 | 81 | 7.0 | 42 | 249 | 251 | 45 | 247 |
| | | | | | | | | | | | | | | | | |
| | 0 | 1745 | 946.446 | | | | | | | | | | | | | |
| B-1 | 7.5 | 1752.5 | 950.842 | 950.855 | 1.15 | 1.27 | 1.20 | 163 | 79 | 79 | 7.0 | 41 | 244 | 250 | 47 | 245 |
| 1 | 15 | 1800 | 955.230 | 955.255 | 1.15 | 1.27 | 1.20 | 163 | 78 | 78 | 7.0 | 40 | 245 | 251 | 44 | 244 |
| 2 | 22.5 | 1807.5 | 959.905 | 960.025 | 1.30 | 1.44 | 1.35 | 163 | 80 | 78 | 7.5 | 41 | 244 | 251 | 45 | 247 |
| 2 | 30 | 1815 | 964.668 | 964.775 | 1.35 | 1.49 | 1.35 | 164 | 81 | 78 | 7.5 | 42 | 246 | 252 | 44 | 240 |
| 3 | 37.5 | 1822.5 | 969.610 | 969.685 | 1.45 | 1.61 | 1.50 | 163 | 81 | 78 | 8.0 | 44 | 247 | 252 | 43 | 257 |
| 3 | 45 | 1830 | 974.556 | 974.675 | 1.45 | 1.61 | 1.50 | 163 | 82 | 78 | 8.0 | 43 | 245 | 251 | 44 | 253 |
| 4 | 52.5 | 1837.5 | 979.595 | 979.605 | 1.50 | 1.67 | 1.55 | 162 | 83 | 78 | 8.0 | 43 | 245 | 252 | 44 | 257 |
| 4 | 60 | 1845 | 984.621 | 984.655 | 1.50 | 1.66 | 1.60 | 165 | 83 | 78 | 8.0 | 43 | 245 | 251 | 43 | 246 |
| 5 | 67.5 | 1852.5 | 989.727 | 989.775 | 1.55 | 1.71 | 1.60 | 166 | 83 | 78 | 8.0 | 42 | 243 | 251 | 43 | 259 |
| 5 | 75 | 1900 | 994.829 | 994.875 | 1.55 | 1.71 | 1.60 | 167 | 83 | 78 | 8.0 | 45 | 246 | 251 | 44 | 252 |
| 6 | 82.5 | 1907.5 | 999.921 | 1000.025 | 1.55 | 1.71 | 1.60 | 167 | 82 | 77 | 8.0 | 45 | 244 | 250 | 43 | 247 |
| 6 | 90 | 1915 | 1005.022 | 1004.995 | 1.55 | 1.71 | 1.60 | 166 | 82 | 78 | 8.0 | 46 | 245 | 252 | 44 | 252 |

**Remarks and Notes:**

# 40 *CFR* 60, APPENDIX A, METHOD 3B
# INTEGRATED GAS SAMPLING DATA

Run No. 2 Date 2-9-99 Client/Source US EPA / CHIP DRYER
Project No. 4851-03-04-01 Sampling Location CHIP DRYER INLET
Sample Type (Multi-Point, Single-Point) Operator D. NEAL
Flow Control Device (Valve, ~~Critical Orifice~~) Bag Type MYLAR Sample No. 2-005
Method 5 Meter Box No. N5 Method 3B Train No. N/A
M3B Pump Type ~~ROTAMETER~~ Diaphram M3B Flow Meter Type ~~N/A~~ Rotameter
M3B Pump No. N5 M3B Flow Meter No. ~~N/A~~ N-5
Desired Sampling Rate 200 cc/min
Leak Check Before Sampling PASS After Sampling PASS
Total Sampling Time 172 min Average Flow Meter Reading 2.0
Flow Rate, cc/min: Average 200 Highest 200 Lowest 200
Estimated Total Sample Volume 34 liters

| Time (24-Hr) | Flow Meter Reading | Start Purge | Start Sampling | Stop Sampling | Sampling | Remarks and Notes |
|---|---|---|---|---|---|---|
| 1545 | 2.0 | 1545 | 1546 | | ✓ | |
| | | | | 1715 | | FOR PORT CHANGE |
| | | | 1745 | | ✓ | RESUME SAMPLING |
| | | | | 1907.5 | | END OF RUN |

M3BSAMP.WPD June 18, 1998

## 40 *CFR* 60, APPENDIX A, METHOD 3B, GAS ANALYSIS BY ORSAT

Run No. 2 Date 02/09/99

Project No. 4951.03.04.01 Sample No. 2005

Sampling Location Chip Dryer Baghouse Inlet Duct

Analysis Start Time 2030

Sample Type (Bag, Grab) Bag

Analyst J. Surman

Orsat Leak Check Before Analysis:

Burrete No Change in 4 Minutes

Pipettes No Change in 4 Minutes

Orsat Leak Check After Analysis:

Burrete No Change in 4 Minutes

Pipettes No Change in 4 Minutes

| Analysis | 1 | | 2 | | 3 | | Average Net Value (% v/v) |
|---|---|---|---|---|---|---|---|
| Gas | Actual Reading | Net Value | Actual Reading | Net Value | Actual Reading | Net Value | |
| $CO_2$ | 1 1.0<br>2 1.0<br>3 | 1.0 | 1 1.0<br>2 1.0<br>3 | 1.0 | 1 1.0<br>2 1.0<br>3 | 1.0 | 1.0 |
| $O_2$ (Net is actual reading minus actual $CO_2$ reading) | 1 20.4<br>2 20.4<br>3 | 19.4 | 1 20.4<br>2 20.4<br>3 | 19.4 | 1 20.4<br>2 20.4<br>3 | 19.4 | 19.4 |
| CO (Net is actual reading minus actual $O_2$ reading) | 1<br>2<br>3 | | 1<br>2<br>3 | | 1<br>2<br>3 | | |

Acceptance Criteria per Method 3B

$CO_2$ >4% 0.3% v/v; ≤4% 0.2% v/v

$O_2$ ≥15% 0.2% v/v; <15% 0.3% v/v

CO 0.3% v/v

4951.03 Culp Al 2005
M0010 ORSAT BAG
SCRAP DRYER BH INLET SAMPLE
For disposal call: J.SURMAN
MIDWEST RESEARCH INSTITUTE

Remarks and Notes:

SW-846, METHOD 0010 - MODIFIED SEMIVOLATILE ORGANICS TRAIN (M0010)
FOR POM AND PAHs
FIELD LABORATORY TRAIN SET-UP DATA

MRI Project No. 4951.03.04.01
Client/Source: U.S. EPA OAQPS EMAD SCG / Chip Dryer
Source Location: Steele, Alabama
Sampling Location: Chip Dryer Baghouse Inlet Duct

Run No. 2 Sampling Train No. IN-2 Sample Box No. 10285
Set-up person(s): J. Surman Date: 02-09-99
Transfer to Sampler:
Relinquished By J. Surman Received By A. Page Date/Time 02-09-99 1430

| TRAIN COMPONENT | COMPONENT NO. | | LOADING DATA | |
|---|---|---|---|---|
| | | | Initial Weights (grams)** | |
| | | | Empty | Loaded |
| Sampling Nozzle (Quartz) | IN-2 | * | | |
| Probe (Liner-Glass) | | * | | |
| Female Probe Outlet Blank-Off | | | | |
| Heated Coupling & Teflon® STL | | * | | |
| 90° Bypass | | * or | | |
| ~~Cyclone~~ | | * and | | |
| ~~Flask~~ | | | | |
| Filter Holder Front | | | | |
| Filter Holder Back with Teflon®-coated 316 SS Filter Support | | Filter Type: Whatman QM-A | | |
| Short 90° Connector | | | | |
| Condenser (Standard) | | Thermocouple No. XAD-4 | | *** |
| XAD-2 Resin Cartridge (Standard) | | ~65 grams XAD-2 Resin + Surrogates | | 501.6 |

*(Documentation of standards injection is separate)*; resin spiked on 02-04-99 and maintained near 4°C until use.

| | | | | |
|---|---|---|---|---|
| 1st Impinger (Mod-GBS) | | Empty | 459.5 | |
| U-Connector (A) | | | | |
| 2nd Impinger (Mod-GBS) | | 100 mLs | 476.2 | 576.6 |
| U-Connector (B) | | ASTM Type II Water | | |
| 3rd Impinger (GBS) | | 100 mLs | 522.7 | 622.3 |
| U-Connector (C) | | ASTM Type II Water | | |
| 4th Impinger (Mod-GBS) | | Empty | 485.1 | |
| U-Connector (D) | | | | |
| 5th Impinger (Mod-GBS) | | ~200 g indicating silica gel | | 666.9 |
| U-Connector (E) | | | | |
| 6th Impinger (Mod-GBS) | | ~200 g indicating silica gel | | 674.9 |
| Impinger Outlet Connector | UH-12 | | | |

* Before and after sampling: Nozzle openings covered with methanol/methylene chloride-rinsed aluminum foil, and nozzle placed in Ziploc® bag. Probe liner outlet sealed with glass female blank-off, and inlet sealed with Teflon® plug. Cyclone/Bypass inlet covered (not sealed) with methanol/methylene chloride-rinsed aluminum foil. Sample transfer line (STL) openings joined with glass/Teflon® coupling used at filter holder outlet during sampling.

** Initial weights of additional components exchanged during the run also entered here. All exchange component openings covered with methanol/methylene chloride-rinsed aluminum foil or as described above.

*** Cartridge weighed with blank-offs in place; then, cartridge covered with aluminum foil to seal out light during storage and sampling.

Component Changes after Set-up and before Recovery and Other Comments:

SW-846, METHOD 0010 - MODIFIED SEMIVOLATILE ORGANICS TRAIN (M0010)
FOR POM AND PAHs
FIELD LABORATORY SAMPLE RECOVERY DATA

MRI Project No. 4951.03.04.01
Client/Source: U.S. EPA OAQPS EMAD SCG / Chip Dryer
Source Location: Steele, Alabama
Sampling Location: Chip Dryer Baghouse Inlet Duct

Run No. 2 Sampling Train No. IN-2 Sample Box No. 10285
Transfer for Recovery:
Relinquished By A. Page Received By J. Surman Date/Time 02/09/99 2000
Sample box recovery person(s): J. Surman Date: 02/09/99
Probe/STL recovery person(s): D. Neal, D. Alburty, D. Griffin, A. Page Date: 02/09/99
Weights below are in grams.

RESIN CARTRIDGE AND IMPINGERS RECOVERY

| Impinger: | XAD-2 Cartridge* | 1st | 2nd | 3rd | 4th | 5th | 6th |
|---|---|---|---|---|---|---|---|
| Final Wt. | 489.2 | 555.4 | 581.8 | 627.1 | 488.9 | 687.3 | 684.2 |
| Initial Wt. | 501.6 | 459.5 | 576.6 | 622.3 | 485.1 | 666.9 | 674.9 |
| Net Wt. | -12.4 | 95.9 | 5.2 | 4.8 | 3.8 | 20.4 | 9.3 |

[ Total Condensate Collected: 127.0 grams]

| Description and/or color: | white | clear | clear | clear | clear | 0 | 20 |
|---|---|---|---|---|---|---|---|
| Sample Recovery: | Cartridge* | 1st Impinger | →→→→ Dispose of properly ←←←← | | | % Blue | |

Sample Number: 2 003 2004
Sample Bottle Tare Wt. 496.2
Transfer impinger contents only (i.e., do not add component rinses to this sample).

Sample Bottle Final Wt. 794.7
Net Sample Wt. 298.5
Components Rinsed**: 1st impinger; combine rinses with train rinses below (sample number XX001)

FILTER RECOVERY AND TRAIN RINSES

FILTER:
Sample Number: 2 002 Description/Color: blackish gray

TRAIN RINSES:
Sample Number: 2 001
Sample Bottle Tare Wt. 494.5
Components Rinsed***: Front -- nozzle, probe liner, coupling and sample transfer line, bypass, ~~cyclone/flask~~, filter holder front;
Back -- filter support, filter holder back, short 90° connector, condenser

Sample Bottle Final Wt. 1343.5
Net Sample Wt. 849.0

* Replace blank-offs and remove aluminum foil, then weigh the cartridge; replace aluminum foil to cover the entire cartridge.
** Methanol/methylene chloride (1:1 v/v) rinses 3 times; add rinses to train rinses (sample number XX001).
*** Methanol/methylene chloride (1:1 v/v) rinses with brushing of front components 3 times or more until perceivably clean, and methanol/methylene chloride (1:1 v/v) rinses of back components 3 times, but without brushing, and including 5-minute soaks of underlined components 3 times.

COMMENTS:

# FIELD SAMPLING DATA FOR METHOD 5 TYPE TRAINS



Run No. 2 Date 2-9-99
Project No. 4951-03
Client Culp (USEPA)
Source Chipper Dryer Outlet
Sampling Location Stack
Train Type/No. SV Out-2
Operator Griffin
Record data every 7.5 minutes
Nozzle No Out 2 Type: Quartz
Nozzle Tip Diameter .234 in
Pitot Tube No. M Hle $C_p$ ~~.816~~ 0.814

Stack Thermocouple No. 36-13
Probe No. 3-2 Length: 3 ft
Liner Type Glass Heated? (Y) n
Sample Box No. Out 2 12003
Filter No. NA
Umbilical/Impinger Hookup UH-37
Umbilical Nos. N50-4
Meter Box No. N1
Temp. Controller No. N1
Temp. Meter No. N1
DGM Correction (Y) 1.019

Orifice Meter ΔH@ 2.113
Barometer No. X4029
Barometric Pressure 29.46 in Hg
Elevation to Meter Box 0 ft
Meter Box $P_{bar}$ 29.46 in Hg
Elevation to Sampling Loc. 26 ft
Sampling Location $P_{bar}$ 29.44 in Hg
Static Pressure -.7 in $H_2O$
Assumed Moisture 7.2 %
Assumed $\%CO_2$ 0.5 $\%O_2$ 19.5

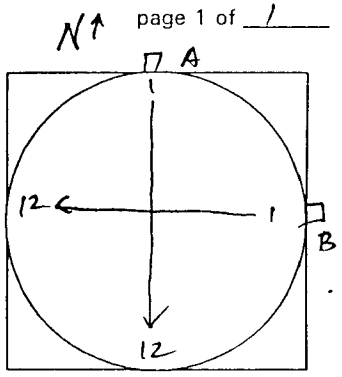


Traverse Point Layout

**Pitot Tube Pressure Measurement System Leak Checks**

| | Initial | Final | Initial | Final | Initial | Final | Initial | Final | Initial | Final |
|---|---|---|---|---|---|---|---|---|---|---|
| Time (24 Hr) | 1521 | 1923 | | | | | | | | |
| Pass or Fail | | pass | | | | | | | | |

**Sampling Train Leak Checks**

| | Initial | Final | Initial | Final | Initial | Final | Initial | Final | Initial | Final |
|---|---|---|---|---|---|---|---|---|---|---|
| Time (24 Hr) | 1524 | 1720 | 1730 | 1920 | | | | | | |
| Vacuum, in Hg | 15 | 11.5 | 15 | 10.5 | | | | | | |
| Leak Rate, cfm | .013 | .006 | .014 | .004 | | | | | | |

| | | | | | |
|---|---|---|---|---|---|
| Final Meter Volume | 387.461 | | | | |
| Initial Meter Volume | 387.198 | | | | |
| Leak Check Volume | .263 | | | | |

**Remarks and Notes:**

Meter Volume at Start of Run 341.212
Meter Volume at End of Run 438.228
Total Leak Check Volume .263
Adjusted Final Volume 437.965

Run No. 2 Date 2-9-99 Sampling Location Chipper Dryer Outlet page 1 of 1

Train Type/No. 8V Out 2 Project No. 4951-03 Operator Griffin

| Traverse Point | Sampling Time, min. | Clock Time (24-Hr) | Dry Gas Meter Reading ($V_m$), $ft^3$ Initial 341.212 Desired | Actual | Velocity Head ($\Delta p$), in. $H_2O$ | Orifice Pressure Differential ($\Delta H$), in. $H_2O$ Desired | Actual | Stack Temp. ($t_s$), °F | Dry Gas Meter Temperature ($t_m$), °F Inlet | Outlet | Pump Vacuum, in. Hg | Silica Gel Impinger Outlet Temp., °F | Probe Liner Outlet Temp., °F | Filter Holder Temp., °F | XAD Cartdg Inlet Temp., °F | |
|---|---|---|---|---|---|---|---|---|---|---|---|---|---|---|---|---|
| | 0 | 1545 | | | | | | | | | | | | | | |
| A-1 | 7.5 | 1552.5 | 343.19 | 343.35 | 0.09 | 0.25 | 0.25 | 166 | 79 | 79 | 4 | 55 | 246 | 252 | 55 | |
| 2 | 15 | 1600 | 344.94 | 345.08 | 0.07 | 0.20 | 0.20 | 163 | 79 | 79 | 3.5 | 47 | 248 | 255 | 52 | |
| 3 | 22.5 | 1607.5 | 346.55 | 346.67 | 0.06 | 0.17 | 0.17 | 165 | 79 | 79 | 3.5 | 50 | 254 | 253 | 52 | |
| 4 | 30 | 1615 | 347.87 | 348.04 | 0.04 | 0.11 | 0.11 | 166 | 80 | 79 | 3 | 50 | 256 | 254 | 50 | |
| 5 | 37.5 | 1622.5 | 349.02 | 349.21 | 0.03 | 0.08 | 0.08 | 165 | 80 | 79 | 3 | 52 | 245 | 254 | 51 | |
| 6 | 45 | 1630 | 350.49 | 350.66 | 0.05 | 0.14 | 0.14 | 164 | 80 | 79 | 3 | 53 | 247 | 254 | 50 | |
| 7 | 52.5 | 1637.5 | 353.67 | 353.88 | 0.23 | 0.66 | 0.66 | 164 | 81 | 80 | 5 | 50 | 246 | 254 | 47 | |
| 8 | 60 | 1645 | 358.80 | 358.78 | 0.60 | 1.73 | 1.7 | 164 | 82 | 80 | 7 | 46 | 246 | 254 | 45 | |
| 9 | 67.5 | 1652.5 | 364.86 | 364.96 | 0.83 | 2.40 | 2.4 | 165 | 86 | 81 | 9 | 45 | 243 | 253 | 43 | |
| 10 | 75 | 1700 | 371.86 | 371.98 | 1.1 | 3.19 | 3.2 | 165 | 90 | 81 | 10 | 44 | 248 | 252 | 43 | |
| 11 | 82.5 | 1707.5 | 379.49 | 379.61 | 1.3 | 3.78 | 3.8 | 165 | 92 | 82 | 11.5 | 44 | 247 | 253 | 43 | |
| 12 | 90 | 1715 | 387.15 | 387.198 | 1.3 | 3.80 | 3.8 | 164 | 93 | 83 | 11.5 | 44 | 245 | 253 | 43 | |
| | | | | | | | | | | | | | | | | |
| Initial | | 1745 | 387.461 | | | | | | | | | | | | | |
| B-1 | 97.5 | 1752.5 | 391.72 | 391.90 | 0.41 | 1.19 | 1.2 | 156 | 80 | 80 | 6 | 55 | 241 | 253 | 49 | |
| 2 | 105 | 1800 | 395.65 | 396.01 | 0.35 | 1.01 | 1.0 | 157 | 79 | 78 | 6 | 46 | 243 | 252 | 45 | |
| 3 | 112.5 | 1807.5 | 398.83 | 399.33 | 0.23 | 0.66 | 0.66 | 157 | 81 | 78 | 5 | 46 | 241 | 252 | 43 | |
| 4 | 120 | 1815 | 400.32 | 400.72 | 0.05 | 0.14 | 0.14 | 157 | 81 | 78 | 3.5 | 49 | 242 | 252 | 45 | |
| 5 | 127.5 | 1822.5 | 401.80 | 402.08 | 0.05 | 0.14 | 0.14 | 157 | 79 | 78 | 3.5 | 52 | 244 | 253 | 47 | |
| 6 | 135 | 1830 | 405.25 | 405.51 | 0.27 | 0.78 | 0.78 | 156 | 78 | 78 | 5.5 | 49 | 247 | 254 | 48 | |
| 7 | 142.5 | 1837.5 | 408.87 | 409.28 | 0.30 | 0.86 | 0.86 | 158 | 79 | 77 | 6 | 49 | 247 | 253 | 47 | |
| 8 | 150 | 1845 | 413.47 | 413.71 | 0.48 | 1.39 | 1.4 | 157 | 80 | 77 | 7 | 47 | 243 | 252 | 46 | |
| 9 | 157.5 | 1852.5 | 418.40 | 418.60 | 0.55 | 1.60 | 1.6 | 157 | 82 | 78 | 7 | 45 | 243 | 253 | 47 | |
| 10 | 165 | 1900 | 424.17 | 424.23 | 0.75 | 2.18 | 2.2 | 157 | 83 | 78 | 8.5 | 45 | 244 | 254 | 46 | |
| 11 | 172.5 | 1907.5 | 431.17 | 431.16 | 1.1 | 3.22 | 3.2 | 154 | 85 | 78 | 10.5 | 46 | 244 | 253 | 44 | |
| 12 | 180 | 1915 | 438.18 | 438.228 | 1.1 | 3.22 | 3.2 | 155 | 86 | 78 | 10.5 | 48 | 243 | 252 | 44 | |
| | | | | | | | | | | | | | | | | |
| | | | | | | | | | | | | | | | | |

**Remarks and Notes:**

# 40 *CFR* 60, APPENDIX A, METHOD 3B
# INTEGRATED GAS SAMPLING DATA

Run No. 2 Date 2-9-99 Client/Source Culp (USEPA)
Project No. 4951-03 Sampling Location Chipper Dryer Outlet
Sample Type (Multi-Point) Single-Point) Operator Griffin
Flow Control Device (Valve) Critical Orifice) Bag Type Mylar Sample No. 2010
Method 5 Meter Box No. N-1 Method 3B Train No. NA
M3B Pump Type Diaphram M3B Flow Meter Type N/A Rotameter
M3B Pump No. N-1 M3B Flow Meter No. N/A N-1
Desired Sampling Rate 200 cc/min
Leak Check Before Sampling 0 After Sampling 0
Total Sampling Time 169 min Average Flow Meter Reading 2.0
Flow Rate, cc/min: Average 200 Highest 200 Lowest 200
Estimated Total Sample Volume 34 liters

| Time (24-Hr) | Flow Meter Reading | Start Purge | Start Sampling | Stop Sampling | Sampling | Remarks and Notes |
|---|---|---|---|---|---|---|
| 1545 | 2.0 | 1545 | 1548 | | | |
| 1600 | 2.0 | | | | ✓ | No Problems |
| 1615 | 2.0 | | | | ✓ | |
| 1630 | 2.0 | | | | ✓ | |
| 1645 | 2.0 | | | | ✓ | |
| 1700 | 2.0 | | | | ✓ | |
| 1710 | 2.0 | | | ✓ | | Port Change |
| 1745 | 2.0 | 1745 | 1748 | | ✓ | |
| 1800 | 2.0 | | | | ✓ | |
| 1815 | 2.0 | | | | ✓ | |
| 1830 | 2.0 | | | | ✓ | |
| 1845 | 2.0 | | | | ✓ | |
| 1900 | 2.0 | | | | ✓ | |
| 1910 | 2.0 | | | ✓ | | End Run 2 |
| | | | | | | |
| | | | | | | |
| | | | | | | |
| | | | | | | |
| | | | | | | |
| | | | | | | |
| | | | | | | |
| | | | | | | |
| | | | | | | |
| | | | | | | |
| | | | | | | |
| | | | | | | |

## 40 *CFR* 60, APPENDIX A, METHOD 3B, GAS ANALYSIS BY ORSAT

Run No. 2 Date 02/09/99

Project No. 4951.03.04.01 Sample No. 2010

Sampling Location Chip Dryer Baghouse Outlet Stack

Analysis Start Time 2000

Sample Type (Bag, Grab) Bag

Analyst J. Surman

Orsat Leak Check Before Analysis:

Burrete No Change in 4 Minutes

Pipettes No Change in 4 Minutes

Orsat Leak Check After Analysis:

Burrete No Change in 4 Minutes

Pipettes No Change in 4 Minutes

| Analysis | 1 | | 2 | | 3 | | Average Net Value (% v/v) |
|---|---|---|---|---|---|---|---|
| Gas | Actual Reading | Net Value | Actual Reading | Net Value | Actual Reading | Net Value | |
| $CO_2$ | 1 0.9<br>2 0.9<br>3 | 0.9 | 1 0.9<br>2 0.9<br>3 | 0.9 | 1 0.9<br>2 0.9<br>3 | 0.9 | 0.9 |
| $O_2$ (Net is actual reading minus actual $CO_2$ reading) | 1 20.5<br>2 20.5<br>3 | 19.6 | 1 20.4<br>2 20.5<br>3 | 19.6 | 1 20.5<br>2 20.5<br>3 | 19.6 | 19.6 |
| CO (Net is actual reading minus actual $O_2$ reading) | 1<br>2<br>3 | | 1<br>2<br>3 | | 1<br>2<br>3 | | |

Acceptance Criteria per Method 3B

$CO_2$ >4% 0.3% v/v $O_2$ ≥15% 0.2% v/v CO 0.3% v/v

≤4% 0.2% v/v <15% 0.3% v/v

Remarks and Notes:

4951.03 Culp Al 2010
M0010 ORSAT BAG
SCRAP DRYER BH OUTLET SAMPLE
For disposal call: J.SURMAN
MIDWEST RESEARCH INSTITUTE

SW-846, METHOD 0010 - MODIFIED SEMIVOLATILE ORGANICS TRAIN (M0010)
FOR POM AND PAHs
FIELD LABORATORY TRAIN SET-UP DATA

MRI Project No. 4951.03.04.01
Client/Source: U.S. EPA OAQPS EMAD SCG / Chip Dryer
Source Location: Steele, Alabama
Sampling Location: Chip Dryer Baghouse Outlet Stack

Run No. 2 Sampling Train No. OUT-2 Sample Box No. 12003
Set-up person(s): J. Surman Date: 02-09-99
Transfer to Sampler:
Relinquished By J. Surman Received By D. Albury Date/Time 02-09-99 1430

| TRAIN COMPONENT | COMPONENT NO. | | LOADING DATA | |
|---|---|---|---|---|
| | | | Initial Weights (grams)** | |
| | | | Empty | Loaded |
| Sampling Nozzle (Quartz) | OUT-2 | * | | |
| Probe (Liner-Glass) | | * | | |
| Female Probe Outlet Blank-Off | | | | |
| Heated Coupling & Teflon® STL | Not used | * | | |
| 90° Bypass | | * or | | |
| Filter Holder Front | | | | |
| Filter Holder Back with Teflon®-coated 316 SS Filter Support | | Filter Type: Whatman QM-A | | |
| Short 90° Connector | | | | |
| Condenser (Standard) | | Thermocouple No. 91-11 | | *** |
| XAD-2 Resin Cartridge (Standard) | | ~65 grams XAD-2 Resin + Surrogates | | 507.3 |

*(Documentation of standards injection is separate)*; resin spiked on 02-04-99 and maintained near 4°C until use.

| | | | | |
|---|---|---|---|---|
| 1st Impinger (Mod-GBS) | | Empty | 468.2 | |
| U-Connector (A) | | | | |
| 2nd Impinger (Mod-GBS) | | 100 mLs | 494.3 | 595.2 |
| U-Connector (B) | | ASTM Type II Water | | |
| 3rd Impinger (GBS) | | 100 mLs | 473.3 | 574.7 |
| U-Connector (C) | | ASTM Type II Water | | |
| 4th Impinger (Mod-GBS) | | Empty | 483.2 | |
| U-Connector (D) | | | | |
| 5th Impinger (Mod-GBS) | | ~200 g indicating silica gel | | 683.7 |
| U-Connector (E) | | | | |
| 6th Impinger (Mod-GBS) | | ~200 g indicating silica gel | | ~~709.~~ 709.1 |
| Impinger Outlet Connector | UH-37 | | | |

* Before and after sampling: Nozzle openings covered with methanol/methylene chloride-rinsed aluminum foil, and nozzle placed in Ziploc® bag. Probe liner outlet sealed with glass female blank-off, and inlet sealed with Teflon® plug. Cyclone/Bypass inlet covered (not sealed) with methanol/methylene chloride-rinsed aluminum foil. Sample transfer line (STL) openings joined with glass/Teflon® coupling used at filter holder outlet during sampling.

** Initial weights of additional components exchanged during the run also entered here. All exchange component openings covered with methanol/methylene chloride-rinsed aluminum foil or as described above.

*** Cartridge weighed with blank-offs in place; then, cartridge covered with aluminum foil to seal out light during storage and sampling.

Component Changes after Set-up and before Recovery and Other Comments:

SW-846, METHOD 0010 - MODIFIED SEMIVOLATILE ORGANICS TRAIN (M0010)
FOR POM AND PAHs
FIELD LABORATORY SAMPLE RECOVERY DATA

MRI Project No. 4951.03.04.01
Client/Source: U.S. EPA OAQPS EMAD SCG / Chip Dryer
Source Location: Steele, Alabama
Sampling Location: Chip Dryer Baghouse Outlet Stack

Run No. 2 Sampling Train No. OUT-2 Sample Box No. 12003
Transfer for Recovery:
Relinquished By D. Albarty Received By J. Surman Date/Time 02/09/99 2000
Sample box recovery person(s): J. Surman Date: 02/09/99
Probe/STL recovery person(s): D. Ikel, D. Albarty, D. Griffin, A. Page Date: 02/09/99
Weights below are in grams.

RESIN CARTRIDGE AND IMPINGERS RECOVERY

| Impinger: | XAD-2 Cartridge* | 1st | 2nd | 3rd | 4th | 5th | 6th |
|---|---|---|---|---|---|---|---|
| Final Wt. | 497.2 | 539.8 | 599.8 | 588.3 | 486.7 | 707.4 | 714.3 |
| Initial Wt. | 507.3 | 468.2 | 595.2 | 574.7 | 483.2 | 683.7 | 709.1 |
| Net Wt. | -10.1 | 71.6 | 4.6 | 13.6 | 3.5 | 23.7 | 5.2 |

[ Total Condensate Collected: 112.1 grams]

| Description and/or color: | white | clear | clear | clear | clear | 10 | 45 |
|---|---|---|---|---|---|---|---|
| Sample Recovery: | Cartridge* | 1st Impinger | → → → → Dispose of properly ← ← ← ← | | | % Blue | |

Sample Number: 2 008 2 009
Sample Bottle Tare Wt. 496.3
Transfer impinger contents only (i.e., do not add component rinses to this sample).

Sample Bottle Final Wt. 779.5
Net Sample Wt. 283.2
Components Rinsed**: 1st impinger; combine rinses with train rinses below (sample number XX006)

FILTER RECOVERY AND TRAIN RINSES

FILTER:
Sample Number: 2 007 Description/Color: blackish gray

TRAIN RINSES:
Sample Number: 2 006
Sample Bottle Tare Wt. 493.6
Components Rinsed***: Front -- nozzle, probe liner, ~~coupling and sample transfer line~~, bypass, filter holder front;
Back -- filter support, filter holder back, short 90° connector, condenser

Sample Bottle Final Wt. 1069.8
Net Sample Wt. 576.2

* Replace blank-offs and remove aluminum foil, then weigh the cartridge; replace aluminum foil to cover the entire cartridge.
** Methanol/methylene chloride (1:1 v/v) rinses 3 times; add rinses to train rinses (sample number XX006).
*** Methanol/methylene chloride (1:1 v/v) rinses with brushing of front components 3 times or more until perceivably clean, and methanol/methylene chloride (1:1 v/v) rinses of back components 3 times, but without brushing, and including 5-minute soaks of underlined components 3 times.

COMMENTS:

# FIELD SAMPLING DATA FOR METHOD 5 TYPE TRAINS



Run No. INLET 1 Date 2-11-99
Project No. 4951-03-04-01
Client U.S. EPA
Source FURNACE #1
Sampling Location INLET
Train Type/No. 1-IN-1
Operator D. NEAL
Record data every 10 minutes
Nozzle No. IN-4 Type: QUARTZ
Nozzle Tip Diameter 0.147 in
Pitot Tube No. M-106 $C_p$ ~~0.829~~ 0.827

Stack Thermocouple No. 48-14
Probe No. 4-2 Length: 4 ft
Liner Type GLASS Heated? (Y) n
12' HEATED TEFLON
Sample Box No. 017-001
Filter No. N/A
Umbilical/Impinger Hookup UH-32
Umbilical Nos. N-125-B
Meter Box No. N6
Temp. Controller No. N6
Temp. Meter No. N6
DGM Correction (Y) 0.985

Orifice Meter ΔH@ 2.068
Barometer No. X-4920
Barometric Pressure 29.61 in Hg
Elevation to Meter Box 0 ft
Meter Box $P_{bar}$ 29.61 in Hg
Elevation to Sampling Loc. 0 ft
Sampling Location $P_{bar}$ 29.61 in Hg
Static Pressure -1.7 in $H_2O$
Assumed Moisture 2.76 %
Assumed $\%CO_2$ 0.5 $\%O_2$ 20

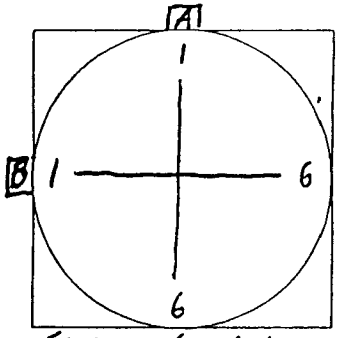


FLOW IS GOING ~~AW~~ TOWARDS OBSERVER

Traverse Point Layout

**Pitot Tube Pressure Measurement System Leak Checks**

| | Initial | Final | Initial | Final | Initial | Final | Initial | Final | Initial | Final |
|---|---|---|---|---|---|---|---|---|---|---|
| Time (24 Hr) | 1113 | 2351 | | | | | | | | |
| Pass or Fail | PASS | PASS | | | | | | | | |

**Sampling Train Leak Checks**

| | Initial | Final | Initial | Final | Initial | Final | Initial | Final | Initial | Final |
|---|---|---|---|---|---|---|---|---|---|---|
| Time (24 Hr) | 1107 | 1403 | 1409 | 1649 | 1710 | 1950 | N/A | 2354 | | |
| Vacuum, in Hg | 15" HG | 4.5" HG | 15" HG | 5" HG | 15" HG | 5.5" HG | | 5.5 HG | | |
| Leak Rate, cfm | .003 | .002 | .007 | .003 | .006 | .003 | | .003 | | |
| Final Meter Volume | | 385.228 | | 432.525 | | 480.878 | | | | |
| Initial Meter Volume | | 384.876 | | 432.146 | | 480.195 | | | | |
| Leak Check Volume | | 0.352 | | 0.379 | | 0.683 | | | | |

**Remarks and Notes:**

Meter Volume at Start of Run 335.267
Meter Volume at End of Run 557.934
Total Leak Check Volume 0.814
Adjusted Final Volume 557.120

Run No. INLET 1 Date 2-11-99 Sampling Location FURNACE INLET page 1 of 3

Train Type/No. 1-IN-1 Project No. 4951-03-04-01 Operator D. NEAL

| Traverse Point | Sampling Time, min. | Clock Time (24-Hr) | Dry Gas Meter Reading ($V_m$), $ft^3$ Initial 335.267 Desired | Actual | Velocity Head ($\Delta p$), in. $H_2O$ | Orifice Pressure Differential ($\Delta H$), in. $H_2O$ Desired | Actual | Stack Temp. ($t_s$), °F | Dry Gas Meter Temperature ($t_m$), °F Inlet | Outlet | Pump Vacuum, in. Hg | Silica Gel Impinger Outlet Temp., °F | Probe Liner Outlet Temp., °F | Filter Holder Temp., °F | XAD Cartdg Inlet Temp., °F | HEATED LINE TEMP °F |
|---|---|---|---|---|---|---|---|---|---|---|---|---|---|---|---|---|
| A-6 | 10 | 1140 | 338.433 | 338.615 | .75 | 0.36 | 0.36 | 140 | 70 | 69 | 3.5 | 58 | 242 | 242 | 57 | 253 |
| 6 | 20 | 1150 | 341.831 | 342.165 | .86 | 0.41 | 0.40 | 145 | 75 | 71 | 3.5 | 44 | 242 | 243 | 50 | 246 |
| * 6 | 30 | 1200 | 344.881 | 345.365 | .75 | 0.33 | 0.30 | 200 | 77 | 73 | 3.5 | 44 | 242 | 243 | 50 | 256 |
| 6 | 40 | 1210 | 348.043 | 348.675 | .80 | 0.35 | 0.31 | 200 | 79 | 75 | 3.5 | 48 | 242 | 244 | 50 | 252 |
| 6 | 50 | 1220 | 351.173 | 351.775 | .75 | 0.35 | 0.30 | 175 | 80 | 77 | 3.5 | 44 | 243 | 242 | 51 | 248 |
| 5 | 60 | 1230 | 354.486 | 354.970 | .80 | 0.38 | 0.33 | 150 | 83 | 79 | 3.5 | 46 | 243 | 244 | 51 | 255 |
| 5 | 70 | 1240 | 357.806 | 358.110 | .80 | 0.38 | 0.30 | 150 | 84 | 80 | 3.5 | 44 | 242 | 242 | 51 | 254 |
| 5 | 80 | 1250 | 360.988 | 361.390 | .75 | 0.35 | 0.28 | 160 | 82 | 80 | 3.5 | 44 | 242 | 243 | 51 | 246 |
| 5 | 90 | 1300 | 364.245 | 364.480 | .80 | 0.37 | 0.30 | 175 | 84 | 81 | 3.5 | 45 | 244 | 243 | 54 | 252 |
| 5 | 100 | 1310 | 367.571 | 367.730 | .80 | 0.38 | 0.28 | 150 | 84 | 82 | 3.5 | 45 | 243 | 243 | 51 | 251 |
| 4 | 110 | 1320 | 370.902 | 371.005 | .80 | 0.38 | 0.30 | 150 | 85 | 83 | 4.0 | 45 | 239 | 245 | 51 | 253 |
| 4 | 120 | 1330 | 374.542 | 374.735 | .90 | 0.46 | 0.42 | 115 | 85 | 83 | 4.5 | 44 | 242 | 243 | 50 | 245 |
| 4 | 130 | 1340 | 378.129 | 378.250 | .90 | 0.45 | 0.37 | 130 | 84 | 82 | 4.5 | 45 | 242 | 244 | 50 | 243 |
| 4 | 140 | 1350 | 381.582 | 381.635 | .85 | 0.41 | 0.34 | 140 | 84 | 81 | 4.5 | 46 | 242 | 243 | 51 | 245 |
| 4 | 150 | 1400 | 384.871 | 384.876 | .85 | 0.38 | 0.30 | 200 | 83 | 81 | 4.5 | 46 | 243 | 243 | 51 | 253 |
| | STOP | SAMPLING | FOR | SCHEDULED | LEAK | CHECKS | - ADD | PUMP | OIL | | | | | | | |
| | 0.0 | 1415 | 385.278 | | | | | | | | | | | | | |
| A-3 | 10 | 1425 | 388.391 | 388.505 | .85 | 0.35 | 0.30 | ~~175~~ 250 | 81 | 80 | 4.0 | 52 | 241 | 242 | 56 | 248 |
| 3 | 20 | 1435 | 391.412 | 391.495 | .80 | 0.32 | 0.25 | 275 | 82 | 81 | 4.0 | 46 | 242 | 243 | 52 | 254 |
| 3 | 30 | 1445 | 394.481 | 394.405 | .80 | 0.33 | 0.25 | 250 | 81 | 80 | 4.0 | 48 | 242 | 244 | 54 | 242 |
| 3 | 40 | 1455 | 397.660 | 397.505 | .80 | 0.35 | 0.28 | 200 | 81 | 79 | 4.0 | 47 | 242 | 244 | 53 | 257 |
| 3 | 50 | 1505 | 401.163 | 401.201 | .85 | 0.43 | 0.40 | 120 | 82 | 80 | 5.0 | 46 | 243 | 244 | 53 | 257 |
| 2 | 60 | 1515 | 404.376 | 404.365 | ~~.85~~ .77 | 0.36 | 0.27 | 125 | 83 | 80 | 4.5 | 47 | 243 | 244 | 52 | 248 |
| 2 | 70 | 1525 | 407.598 | 407.470 | .77 | 0.36 | 0.28 | 125 | 84 | 82 | 4.5 | 50 | 244 | 244 | 53 | 248 |
| 2 | 80 | 1535 | 410.821 | 410.740 | .74 | 0.36 | 0.30 | 145 | 86 | 84 | 4.5 | 47 | 244 | 244 | 53 | 251 |
| 2 | 90 | 1545 | 414.099 | 414.100 | .74 | 0.37 | 0.33 | 125 | 86 | 84 | 4.5 | 45 | 242 | 243 | 52 | 258 |
| 2 | 100 | 1555 | 417.246 | 417.175 | .74 | 0.34 | 0.28 | 175 | 86 | 84 | 4.5 | 45 | 242 | 244 | 51 | 252 |
| | | ~~PORT CHANGE~~ ON 2-11-99 | | | | | | | | | | | | | | |

Remarks and Notes: * STACK TEMP & DELTA P READING ARE AN AVERAGE OBSERVED OVER COURSE OF DATA POINT.

Run No. INLET 1 Date 2-11-99 Sampling Location FURNACE INLET page 2 of ~~7~~ 13

Train Type/No. 1-IN-1 Project No. 4951-03-09-01 Operator D. NEOL

| Traverse Point | Sampling Time, min. | Clock Time (24-Hr) | Dry Gas Meter Reading ($V_m$), $ft^3$ Initial 417.246 Desired | Actual | Velocity Head ($\Delta p$), in. $H_2O$ | Orifice Pressure Differential ($\Delta H$), in. $H_2O$ Desired | Actual | Stack Temp. ($t_s$), °F | Dry Gas Meter Temperature ($t_m$), °F Inlet | Outlet | Pump Vacuum, in. Hg | Silica Gel Impinger Outlet Temp., °F | Probe Liner Outlet Temp., °F | Filter Holder Temp., °F | XAD Cartdg Inlet Temp., °F | HEATED LINE TEMP °F |
|---|---|---|---|---|---|---|---|---|---|---|---|---|---|---|---|---|
| A-1 | 110 | 1605 | 420.414 | 420.375 | .75 | 0.35 | 0.31 | 175 | 86 | 84 | 4.5 | 45 | 244 | 243 | 51 | 246 |
| 1 | 120 | 1615 | 423.399 | 423.470 | .62 | 0.31 | 0.28 | 130 | 85 | 84 | 4.5 | 44 | 243 | 243 | 50 | 248 |
| 1 | 130 | 1625 | 426.399 | 426.460 | .65 | 0.31 | 0.26 | 150 | 84 | 83 | 4.5 | 45 | 243 | 243 | 50 | 256 |
| 1 | 140 | 1635 | 429.211 | 429.210 | .62 | 0.27 | 0.21 | 200 | 83 | 82 | 4.5 | 45 | 243 | 246 | 50 | 249 |
| 1 | 150 | 1645 | 432.188 | 432.146 | .62 | 0.31 | 0.25 | 130 | 84 | 82 | 4.5 | 46 | 243 | 242 | 50 | 258 |
| DH 2-11-99 | | | PORT CHANGE | | | | | | | | | | | | | |
| ~~B-1~~ | 0 | 1715 | 432.525 | | | | | | | | | | | | | |
| B-1 | 10 | 1725 | 435.579 | 435.475 | .65 | 0.32 | 0.26 | 120 | 80 | 79 | 4.5 | 49 | 240 | 241 | 50 | 242 |
| 1 | 20 | 1735 | 438.631 | 438.540 | .65 | 0.32 | 0.28 | 120 | 79 | 79 | 4.5 | 43 | 241 | 242 | 48 | 252 |
| 1 | 30 | 1745 | 441.759 | 441.770 | .67 | 0.34 | 0.31 | 110 | 80 | 79 | 4.5 | 42 | 242 | 242 | 48 | 258 |
| 1 | 40 | 1755 | 444.893 | 444.920 | .67 | 0.34 | 0.29 | 110 | 81 | 80 | 4.5 | 41 | 244 | 242 | 46 | 237 |
| 1 | 50 | 1805 | 448.030 | 447.955 | .67 | 0.34 | 0.28 | 110 | 82 | 80 | 4.5 | 42 | 244 | 243 | 46 | 237 |
| 2 | 60 | 1815 | 451.218 | 451.140 | .80 | 0.35 | 0.30 | 200 | 82 | 81 | 5.0 | 42 | 241 | 243 | 47 | 242 |
| 2 | 70 | 1825 | 454.518 | 454.485 | .75 | 0.38 | 0.34 | 120 | 83 | 82 | 5.0 | 42 | 243 | 243 | 46 | 248 |
| 2 | 80 | 1835 | 457.549 | 457.650 | .68 | 0.32 | 0.29 | 165 | 84 | 83 | 5.0 | 43 | 244 | 244 | 46 | 255 |
| 2 | 90 | 1845 | 460.742 | 460.870 | .70 | 0.35 | 0.30 | 120 | 84 | 83 | 5.0 | 40 | 241 | 244 | 45 | 246 |
| 2 | 100 | 1855 | 464.056 | 464.080 | .75 | 0.38 | 0.31 | 115 | 83 | 82 | 5.0 | 40 | 242 | 242 | 45 | 239 |
| 3 | 110 | 1905 | 467.294 | 467.270 | .73 | 0.36 | 0.30 | 125 | 82 | 82 | 5.0 | 41 | 241 | 241 | 45 | 242 |
| 3 | 120 | 1915 | 470.508 | 470.450 | .75 | 0.36 | 0.30 | 150 | 82 | 82 | 5.0 | 42 | 242 | 242 | 46 | 246 |
| 3 | 130 | 1925 | 473.719 | 473.665 | .75 | 0.36 | 0.31 | 150 | 82 | 81 | 5.0 | 42 | 243 | 242 | 46 | 243 |
| 3 | 140 | 1935 | 476.929 | 476.905 | .78 | 0.36 | 0.31 | 175 | 82 | 81 | 5.0 | 43 | 241 | 243 | 45 | 259 |
| 3 | 150 | 1945 | 480.177 | 480.195 | .75 | 0.37 | 0.32 | 135 | 81 | 81 | 5.5 | 42 | 242 | 245 | 45 | 246 |
| | | | STOP SAMPLING FOR SCHEDULED LEAK CHECKS ~~AND PUMP OFF~~ D.N. 2-11-99 O/L ok | | | | | | | | | | | | | |
| | 0 | 1955 | 490.278 | | | | | | | | | | | | | |
| B-4 | 10 | 2005 | 483.748 | 843.860 | .82 | 0.42 | 0.38 | 108 | 80 | 80 | 5.5 | 44 | 241 | 241 | 47 | 245 |
| 4 | 20 | 2015 | 487.218 | 487.345 | .82 | 0.42 | 0.36 | 108 | 80 | 80 | 5.5 | 42 | 241 | 243 | 44 | 257 |
| 4 | 30 | 2025 | 490.742 | 490.785 | .84 | 0.43 | 0.36 | 102 | 79 | 79 | 5.5 | 43 | 242 | 242 | 44 | 256 |
| 4 | 40 | 2035 | 494.270 | 494.245 | .84 | 0.43 | 0.36 | 102 | 80 | 79 | 5.5 | 44 | 243 | 242 | 45 | 258 |

Remarks and Notes:

Run No. INLET 1 Date 2-11-99 Sampling Location FURNACE INLET page 3 of 3

Train Type/No. 1-IN-1 Project No. 4951-03-04-01 Operator D. NEAL

| Traverse Point | Sampling Time, min. | Clock Time (24-Hr) | Dry Gas Meter Reading ($V_m$), $ft^3$ Initial 494.270 Desired | Actual | Velocity Head ($\Delta p$), in. $H_2O$ | Orifice Pressure Differential ($\Delta H$), in. $H_2O$ Desired | Actual | Stack Temp. ($t_s$), °F | Dry Gas Meter Temperature ($t_m$), °F Inlet | Outlet | Pump Vacuum, in. Hg | Silica Gel Impinger Outlet Temp., °F | Probe Liner Outlet Temp., °F | Filter Holder Temp., °F | XAD Cartdg Inlet Temp., °F | HEATED LINE TEMP °F |
|---|---|---|---|---|---|---|---|---|---|---|---|---|---|---|---|---|
| | 40 | 2035 | | | | | | | | | | 45°F | | | | |
| B-4 | 50 | 2045 | 497.753 | 497.680 | .82 | 0.42 | 0.36 | 105 | 81 | 80 | 5.5 | ~~244~~ ON 2-11-99 | 244 | 242 | 46 | 253 |
| 5 | 60 | 2055 | 501.235 | 501.200 | .82 | 0.42 | 0.37 | 105 | 81 | 80 | 5.5 | 45 | 242 | 245 | 45 | 244 |
| 5 | 70 | 2105 | 504.559 | 504.585 | .75 | 0.38 | 0.34 | 107 | 81 | 80 | 5.5 | 45 | 245 | 244 | 46 | 250 |
| 5 | 80 | 2115 | 507.884 | 507.910 | .75 | 0.38 | 0.33 | 107 | 81 | 80 | 5.5 | 46 | 242 | 243 | 47 | 258 |
| 5 | 90 | 2125 | 511.208 | 511.245 | .75 | 0.38 | 0.33 | 107 | 81 | 80 | 5.5 | 46 | 243 | 246 | 46 | 257 |
| 5 | 100 | 2135 | 514.516 | 514.570 | .74 | 0.38 | 0.33 | 105 | 81 | 80 | 5.5 | 46 | 241 | 242 | 46 | 247 |
| 6 | 110 | 2145 | 517.844 | 517.860 | .75 | 0.38 | 0.32 | 108 | 82 | 81 | 5.5 | 43 | 243 | 243 | 47 | 255 |
| 6 | 120 | 2155 | 521.181 | 521.130 | .75 | 0.39 | 0.32 | 105 | 82 | 81 | 5.5 | 43 | 242 | 242 | 46 | 242 |
| 6 | 130 | 2205 | 524.517 | 524.450 | .75 | 0.39 | 0.33 | 105 | 82 | 81 | 5.5 | 44 | 242 | 243 | 47 | 246 |
| 6 | 140 | 2215 | 527.851 | 527.870 | .75 | 0.39 | 0.34 | 105 | 81 | 81 | 5.5 | 44 | 243 | 242 | 47 | 245 |
| 6 | 150 | 2225 | 531.165 | 531.215 | .74 | 0.38 | 0.34 | 104 | 81 | 81 | 5.5 | 42 | 242 | 242 | 46 | 246 |
| 5 | 160 | 2235 | 534.476 | 534.510 | .74 | 0.38 | 0.33 | 104 | 81 | 81 | 5.5 | 42 | 242 | 243 | 46 | 242 |
| 5 | 170 | 2245 | 537.832 | 537.825 | .76 | 0.39 | 0.33 | 104 | 81 | 80 | 5.5 | 43 | 241 | 243 | 46 | 247 |
| 5 | 180 | 2255 | 541.181 | 541.215 | .76 | 0.39 | 0.34 | 104 | 80 | 79 | 5.5 | 43 | 241 | 243 | 46 | 252 |
| 5 | 190 | 2305 | 544.527 | 544.525 | .76 | 0.39 | 0.33 | 105 | 80 | 79 | 5.5 | 43 | 240 | 242 | 46 | 244 |
| 5 | 200 | 2315 | 547.868 | 547.875 | .76 | 0.39 | 0.34 | 105 | 79 | 78 | 5.5 | 43 | 240 | 242 | 46 | 257 |
| 5 | 210 | 2325 | 551.233 | 551.250 | .77 | 0.40 | 0.34 | 104 | 79 | 78 | 5.5 | 44 | 243 | 243 | 47 | 248 |
| 5 | 220 | 2335 | 554.598 | 554.550 | .77 | 0.40 | 0.33 | 104 | 79 | 78 | 5.5 | 43 | 241 | 243 | 45 | 242 |
| 5 | 230 | 2345 | 557.935 | 557.934 | .76 | 0.39 | 0.33 | 104 | 78 | 77 | 5.5 | 43 | 241 | 242 | 45 | 255 |

Remarks and Notes:

# 40 *CFR* 60, APPENDIX A, METHOD 3B
# INTEGRATED GAS SAMPLING DATA



Run No. INLET-1 Date 2-11-99 Client/Source US EPA / FURNACE
Project No. 4951-03-04-01 Sampling Location INLET
Sample Type (Multi-Point, Single-Point) Operator D. NEOL
Flow Control Device (Valve, ~~Critical Orifice~~) Bag Type MYLAR Sample No. 1015
Method 5 Meter Box No. N6 Method 3B Train No. N/A
M3B Pump Type ON 2-11-99 ~~N6 Rotameter~~ M3B Flow Meter Type ~~N/A~~ Rotameter
M3B Pump No. N6 M3B Flow Meter No. ~~N/A~~ N-6
Desired Sampling Rate 100 cc/min
Leak Check Before Sampling PASS After Sampling PASS
Total Sampling Time 640 min Average Flow Meter Reading 1.0
Flow Rate, cc/min: Average 100 Highest 100 Lowest 100
Estimated Total Sample Volume 64 liters

| Time (24-Hr) | Flow Meter Reading | Start Purge | Start Sampling | Stop Sampling | Sampling | Remarks and Notes |
|---|---|---|---|---|---|---|
| 1130 | 1.0 | 1130 | 1135 | | ✓ | |
| 1145 | 1.0 | | | | ✓ | |
| 1155 | 1.0 | | | | ✓ | |
| 1205 | 1.0 | | | | ✓ | |
| 1215 | 1.0 | | | | ✓ | |
| 1225 | 1.0 | | | | ✓ | |
| 1235 | 1.0 | | | | ✓ | |
| 1245 | 1.0 | | | | ✓ | |
| 1255 | 1.0 | | | | ✓ | |
| 1305 | 1.0 | | | | ✓ | |
| 1315 | 1.0 | | | | ✓ | |
| 1325 | 1.0 | | | | ✓ | |
| 1335 | 1.0 | | | | ✓ | |
| 1345 | 1.0 | | | | ✓ | |
| 1355 | 1.0 | | | | ✓ | |
| | | | | 1400 | | FOR SCHEDULED LEAK CHECKS |
| | 1.0 | | 1415 | | ✓ | RESUME SAMPLING AFTER LEAK CHECKS |
| 1425 | 1.0 | | | | ✓ | |
| 1435 | 1.0 | | | | ✓ | |
| 1445 | 1.0 | | | | ✓ | |
| 1455 | 1.0 | | | | ✓ | |
| 1505 | 1.0 | | | | ✓ | |
| 1515 | 1.0 | | | | ✓ | |
| 1525 | 1.0 | | | | ✓ | |
| 1535 | 1.0 | | | | ✓ | |
| 1545 | 1.0 | | | | ✓ | |
| 1555 | 1.0 | | ON 2-11-99 ~~1555~~ | | ✓ | ~~STOP FOR PORT CHANGE~~ ON 2-11-99 |

# 40 *CFR* 60, APPENDIX A, METHOD 3B
# INTEGRATED GAS SAMPLING DATA



Run No. INLET-1 Date 2-11-99 Client/Source US EPA / FURNACE
Project No. 4551-03-07-01 Sampling Location INLET
Sample Type (Multi-Point, Single-Point) Operator D. NEAL
Flow Control Device (Valve, ~~Critical Orifice~~) Bag Type MYLAR Sample No. 1015 & 1015A
Method 5 Meter Box No. N6 Method 3B Train No. N/A
M3B Pump Type ~~Rotameter~~ Diaphram M3B Flow Meter Type ~~N/A~~ Rotameter
M3B Pump No. N6 M3B Flow Meter No. ~~N/A~~ N6
Desired Sampling Rate 100 cc/min
Leak Check Before Sampling PASS After Sampling PASS
Total Sampling Time _____ min Average Flow Meter Reading 1.0
Flow Rate, cc/min: Average 100 Highest 100 Lowest 100
Estimated Total Sample Volume _____ liters

| Time (24-Hr) | Flow Meter Reading | Start Purge | Start Sampling | Stop Sampling | Sampling | Remarks and Notes |
|---|---|---|---|---|---|---|
| 1605 | 1.0 | | | | ✓ | |
| 1615 | 1.0 | | | | ✓ | |
| 1625 | 1.0 | | | | ✓ | |
| | | | | 1635 | | BAG FULL - PORT CHANGE AT 1445 |
| → | | 1814 | 1815 | | ✓ | RESUME SAMPLING - NEW BAG - 1015A ← |
| 1825 | 1.0 | | | | ✓ | |
| 1835 | 1.0 | | | | ✓ | |
| 1845 | 1.0 | | | | ✓ | |
| 1855 | 1.0 | | | | ✓ | |
| 1805 | 1.0 | | | | ✓ | |
| 1815 | 1.0 | | | | ✓ | |
| 1825 | 1.0 | | | | ✓ | |
| 1835 | 1.0 | | | | ✓ | |
| 1845 | 1.0 | | | | ✓ | |
| 1855 | 1.0 | | | | ✓ | |
| 1905 | 1.0 | | | | ✓ | |
| 1915 | 1.0 | | | | ✓ | |
| 1925 | 1.0 | | | | ✓ | |
| 1935 | 1.0 | | | | ✓ | |
| 1945 | 1.0 | | | 1945 | | FOR SCHEDULED LEAK CHECK |
| | 1.0 | | 1955 | | ✓ | RESUME SAMPLING AFTER LEAK CHECK |
| 2005 | 1.0 | | | | ✓ | |
| 2015 | 1.0 | | | | ✓ | |
| 2025 | 1.0 | | | | ✓ | |
| 2035 | 1.0 | | | | ✓ | |
| 2045 | 1.0 | | | | ✓ | |

# 40 *CFR* 60, APPENDIX A, METHOD 3B
# INTEGRATED GAS SAMPLING DATA



Run No. INLET 1 Date 2-11-99 Client/Source US EPA / FURNACE INLET
Project No. 4951-09-04-01 Sampling Location INLET
Sample Type (Multi-Point) Single-Point) Operator D. NEAL
Flow Control Device (Valve, ~~Critical Orifice~~) Bag Type MYLAR Sample No. 1015A
Method 5 Meter Box No. N6 Method 3B Train No. N/A
M3B Pump Type ~~Rotameter~~ Diaphram M3B Flow Meter Type ~~N/A~~ Rotameter
M3B Pump No. N6 M3B Flow Meter No. ~~N/A~~ N-6
Desired Sampling Rate 100 cc/min
Leak Check Before Sampling PASS After Sampling PASS
Total Sampling Time _____ min Average Flow Meter Reading 1.0
Flow Rate, cc/min: Average 100 Highest 100 Lowest 100
Estimated Total Sample Volume _____ liters

| Time (24-Hr) | Flow Meter Reading | Start Purge | Start Sampling | Stop Sampling | Sampling | Remarks and Notes |
|---|---|---|---|---|---|---|
| 2055 | 1.0 | | | | ✓ | |
| 2105 | 1.0 | | | | ✓ | |
| 2115 | 1.0 | | | | ✓ | |
| 2125 | 1.0 | | | | ✓ | |
| 2135 | 1.0 | | | | ✓ | |
| 2145 | 1.0 | | | | ✓ | |
| 2155 | 1.0 | | | | ✓ | |
| 2205 | 1.0 | | | | ✓ | |
| 2215 | 1.0 | | | 2215 | ✓ | BAG FULL |
| | | | | | | |
| | | | | | | |
| | | | | | | |
| | | | | | | |
| | | | | | | |
| | | | | | | |
| | | | | | | |
| | | | | | | |
| | | | | | | |
| | | | | | | |
| | | | | | | |
| | | | | | | |
| | | | | | | |
| | | | | | | |
| | | | | | | |
| | | | | | | |
| | | | | | | |

## 40 *CFR* 60, APPENDIX A, METHOD 3B, GAS ANALYSIS BY ORSAT

Run No. 1 Date 02/11/99
Project No. 4951.03.04.01 Sample No. 1015
Sampling Location Reverberatory Furnace #1 Baghouse Inlet Duct
Analysis Start Time 1716
Sample Type (Bag, Grab) Bag (first half of run)
Analyst J. Surman

Orsat Leak Check Before Analysis:
Burrete No Change in 4 Minutes
Pipettes No Change in 4 Minutes
Orsat Leak Check After Analysis:
Burrete No Change in 4 Minutes
Pipettes No Change in 4 Minutes

| Analysis | 1 | | 2 | | 3 | | Average Net Value (% v/v) |
|---|---|---|---|---|---|---|---|
| Gas | Actual Reading | Net Value | Actual Reading | Net Value | Actual Reading | Net Value | |
| $CO_2$ | 1 0.5<br>2 0.5<br>3 | 0.5 | 1 0.5<br>2 0.5<br>3 | 0.5 | 1 0.5<br>2 0.5<br>3 | 0.5 | 0.5 |
| $O_2$ (Net is actual reading minus actual $CO_2$ reading) | 1 21.3<br>2 21.3<br>3 | 20.8 | 1 21.2<br>2 21.3<br>3 | 20.8 | 1 21.3<br>2 21.3<br>3 | 20.8 | 20.8 |
| CO (Net is actual reading minus actual $O_2$ reading) | 1<br>2<br>3 | | 1<br>2<br>3 | | 1<br>2<br>3 | | |

Acceptance Criteria per Method 3B

$CO_2$ >4% 0.3% v/v
≤4% 0.2% v/v

$O_2$ ≥15% 0.2% v/v
<15% 0.3% v/v

CO 0.3% v/v

Remarks and Notes:

4951.03 Culp A1 1015
M0010 ORSAT BAG
FURNACE BH INLET SAMPLE
For disposal call: J.SURMAN
MIDWEST RESEARCH INSTITUTE

## 40 *CFR* 60, APPENDIX A, METHOD 3B, GAS ANALYSIS BY ORSAT

Run No. 1 Date 02/11/99

Project No. 4951.03.04.01 Sample No. 1015A

Sampling Location Reverberatory Furnace #1 Baghouse Inlet Duct

Analysis Start Time 2035

Sample Type (Bag, Grab) Bag (second half of run)

Analyst J. Surman

Orsat Leak Check Before Analysis:

Burrete No Change in 4 Minutes

Pipettes No Change in 4 Minutes

Orsat Leak Check After Analysis:

Burrete No Change in 4 Minutes

Pipettes No Change in 4 Minutes

| Analysis | 1 | | 2 | | 3 | | Average Net Value (% v/v) |
|---|---|---|---|---|---|---|---|
| Gas | Actual Reading | Net Value | Actual Reading | Net Value | Actual Reading | Net Value | |
| $CO_2$ | 1 0.0<br>2 0.0<br>3 | 0.0 | 1 0.0<br>2 0.0<br>3 | 0.0 | 1 0.0<br>2 0.0<br>3 | 0.0 | 0.0 |
| $O_2$ (Net is actual reading minus actual $CO_2$ reading) | 1 20.9<br>2 20.9<br>3 | 20.9 | 1 20.9<br>2 20.9<br>3 | 20.9 | 1 20.9<br>2 20.9<br>3 | 20.9 | 20.9 |
| CO (Net is actual reading minus actual $O_2$ reading) | 1<br>2<br>3 | | 1<br>2<br>3 | | 1<br>2<br>3 | | |

Acceptance Criteria per Method 3B

$CO_2$ >4% 0.3% v/v $O_2$ ≥15% 0.2% v/v CO 0.3% v/v

≤4% 0.2% v/v <15% 0.3% v/v

Remarks and Notes:

4951.03 Culp Al 1015
M0010 ORSAT BAG
FURNACE BH INLET SAMPLE
For disposal call: J.SURMAN
MIDWEST RESEARCH INSTITUTE

SW-846, METHOD 0010 - MODIFIED SEMIVOLATILE ORGANICS TRAIN (M0010)
FOR POM AND PAHs
FIELD LABORATORY TRAIN SET-UP DATA

MRI Project No. 4951.03.04.01
Client/Source: U.S. EPA OAQPS EMAD SCG / Side-well Reverberatory Furnace #1
Source Location: Steele, Alabama
Sampling Location: Reverberatory Furnace Baghouse Inlet Duct

Run No. 1 Sampling Train No. IN-1 Sample Box No. 12001
Set-up person(s): J. Surman Date: 02/11/99
Transfer to Sampler:
Relinquished By J. Surman Received By A. Page Date/Time 02/11/99 0915

| TRAIN COMPONENT | COMPONENT NO. | | LOADING DATA | | |
|---|---|---|---|---|---|
| | | | | Initial Weights (grams)** | |
| | | | | Empty | Loaded |
| Sampling Nozzle (Quartz) | IN-4 | * | | | |
| Probe (Liner-Glass) | | * | | | |
| Female Probe Outlet Blank-Off | | | | | |
| Heated Coupling & Teflon® STL | | * | | | |
| 90° Bypass | | * or | | | |
| ~~Cyclone~~ | | * and | | | |
| ~~Flask~~ | | | | | |
| Filter Holder Front | | | | | |
| Filter Holder Back with Teflon®-coated 316 SS Filter Support | | | Filter Type: Whatman QM-A | | |
| Short 90° Connector | | | | | |
| Condenser (Standard) | | | Thermocouple No. XAD-4 | | *** |
| XAD-2 Resin Cartridge (Standard) | | | ~65 grams XAD-2 Resin + Surrogates | 500.1 | |

*(Documentation of standards injection is separate)*; resin spiked on 02-04-99 and maintained near 4°C until use.

| | | | | |
|---|---|---|---|---|
| 1st Impinger (Mod-GBS) | | Empty | 462.4 | |
| U-Connector (A) | | | | |
| 2nd Impinger (Mod-GBS) | | 100 mLs | 469.1 | 573.2 |
| U-Connector (B) | | ASTM Type II Water | | |
| 3rd Impinger (GBS) | | 100 mLs | 472.7 | 576.4 |
| U-Connector (C) | | ASTM Type II Water | | |
| 4th Impinger (Mod-GBS) | | Empty | 455.4 | |
| U-Connector (D) | | | | |
| 5th Impinger (Mod-GBS) | | ~200 g indicating silica gel | | 686.0 |
| U-Connector (E) | | | | |
| 6th Impinger (Mod-GBS) | | ~200 g indicating silica gel | | 704.3 |
| Impinger Outlet Connector | UH-32 | | | |

* Before and after sampling: Nozzle openings covered with methanol/methylene chloride-rinsed aluminum foil, and nozzle placed in Ziploc® bag. Probe liner outlet sealed with glass female blank-off, and inlet sealed with Teflon® plug. Cyclone/Bypass inlet covered (not sealed) with methanol/methylene chloride-rinsed aluminum foil. Sample transfer line (STL) openings joined with glass/Teflon® coupling used at filter holder outlet during sampling.

** Initial weights of additional components exchanged during the run also entered here. All exchange component openings covered with methanol/methylene chloride-rinsed aluminum foil or as described above.

*** Cartridge weighed with blank-offs in place; then, cartridge covered with aluminum foil to seal out light during storage and sampling.

Component Changes after Set-up and before Recovery and Other Comments:

SW-846, METHOD 0010 - MODIFIED SEMIVOLATILE ORGANICS TRAIN (M0010)
FOR POM AND PAHs
FIELD LABORATORY SAMPLE RECOVERY DATA

MRI Project No. 4951.03.04.01
Client/Source: U.S. EPA OAQPS EMAD SCG / Side-well Reverberatory Furnace #1
Source Location: Steele, Alabama
Sampling Location: Reverberatory Furnace Baghouse Inlet Duct

Run No. 1 Sampling Train No. IN-1 Sample Box No. 12001
Transfer for Recovery:
Relinquished By A. Page Received By J. Surman Date/Time 02/12/99 0010
Sample box recovery person(s): J. Surman Date: 02/12/99
Probe/STL recovery person(s): D. Neal, D. Albert, D. Griffin, A. Page Date: 02/12/99
Weights below are in grams.

RESIN CARTRIDGE AND IMPINGERS RECOVERY

| Impinger: | XAD-2 Cartridge* | 1st | 2nd | 3rd | 4th | 5th | 6th |
|---|---|---|---|---|---|---|---|
| Final Wt. | 492.3 | 511.9 | 571.1 | 581.7 | 458.0 | 716.3 | 726.7 |
| Initial Wt. | 500.1 | 462.4 | 573.2 | 576.4 | 455.4 | 686.0 | 704.3 |
| Net Wt. | -7.8 | 49.5 | -2.1 | 5.3 | 2.6 | 30.3 | 22.4 |
| Description and/or color: | orangish brown condensate* | very pale yellow | clear | clear | clear | 10 | 20 |

[ Total Condensate Collected: 100.2 grams]

Sample Recovery: Cartridge* 1st Impinger →→→→ Dispose of properly ←←←← % Blue

Sample Number: 1013 1014
Sample Bottle Tare Wt. 496.2
Transfer impinger contents only (i.e., do not add component rinses to this sample).

Sample Bottle Final Wt. 747.5
Net Sample Wt. 251.3
Components Rinsed**: 1st impinger; combine rinses with train rinses below (sample number XX011)

FILTER RECOVERY AND TRAIN RINSES

FILTER:
Sample Number: 1012 Description/Color: black

TRAIN RINSES:
Sample Number: 1011
Sample Bottle Tare Wt. 492.8
Components Rinsed***: Front -- nozzle, probe liner, coupling and sample transfer line, bypass, ~~cyclone/flask~~, filter holder front;
Back -- filter support, filter holder back, short 90° connector, condenser

Sample Bottle Final Wt. 1368.1
Net Sample Wt. 875.3

* Replace blank-offs and remove aluminum foil, then weigh the cartridge; replace aluminum foil to cover the entire cartridge.
** Methanol/methylene chloride (1:1 v/v) rinses 3 times; add rinses to train rinses (sample number XX011).
*** Methanol/methylene chloride (1:1 v/v) rinses with brushing of front components 3 times or more until perceivably clean, and methanol/methylene chloride (1:1 v/v) rinses of back components 3 times, but without brushing, and including 5-minute soaks of underlined components 3 times.

COMMENTS: * material on glass wool on top of resin

# FIELD SAMPLING DATA FOR METHOD 5 TYPE TRAINS

page 1 of 1

Run No. 1 Date 2-11-99
Project No. 4951-03
Client Culp (USEPA)
Source Furnace #1
Sampling Location Outlet
Train Type/No. SV M-0010 OUT1
Operator Griffin
Record data every ~~12.5~~ 2.11 minutes
Nozzle No. Out3 Type: Quartz
Nozzle Tip Diameter .147 in
Pitot Tube No. M115 $C_p$ ~~.832~~ 0.831

Stack Thermocouple No. 60-3
Probe No. 5-6 Length: 5 ft
Liner Type Glass Heated? (Y) n
Sample Box No. Out 1 10
Filter No. NA
Umbilical/Impinger Hookup UH34
Umbilical Nos. N125-3
Meter Box No. N5
Temp. Controller No. N5
Temp. Meter No. N5
DGM Correction (Y) 1.038

Orifice Meter ΔH@ 2.007
Barometer No. X4929
Barometric Pressure 29.61 in Hg
Elevation to Meter Box 0 ft
Meter Box $P_{bar}$ 29.61 in Hg
Elevation to Sampling Loc. 25 ft
Sampling Location $P_{bar}$ 29.59 in Hg
Static Pressure -.30 in $H_2O$
Assumed Moisture 1.02 %
Assumed $\%CO_2$ 0 $\%O_2$ 21.0

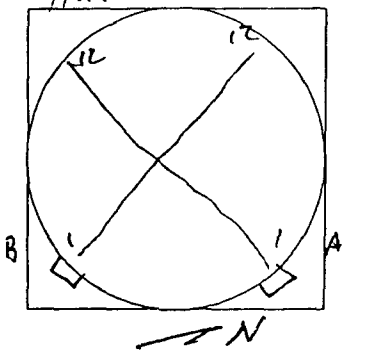

Traverse Point Layout

**Pitot Tube Pressure Measurement System Leak Checks**

| | Initial | Final | Initial | Final | Initial | Final | Initial | Final | Initial | Final |
|---|---|---|---|---|---|---|---|---|---|---|
| Time (24 Hr) | 1039 | 2350 | | | | | | | | |
| Pass or Fail | | pass | | | | | | | | |

**Sampling Train Leak Checks**

| | Initial | Final | Initial | Final | Initial | Final | Initial | Final | Initial | Final |
|---|---|---|---|---|---|---|---|---|---|---|
| Time (24 Hr) | 1043 | 1402 | | 1650 | 1655 | 1933 | | 2349 | | |
| Vacuum, in Hg | 15 | 3 | | 3 | 15 | 4 | | 4 | | |
| Leak Rate, cfm | .002 | .003 | | .003 | .007 | .003 | | .002 | | |
| Final Meter Volume | | 44.335 | | 83.~~3~~910 | | 120.912 | | ~~186.194~~ | | |
| Initial Meter Volume | | 44.311 | | 83.364 | | 120.865 | | ~~186.161~~ | | |
| Leak Check Volume | | .024 | | 04~~.225~~ .546 | | .047 | | ~~.033~~ | | |

DAT 2-11-99

**Remarks and Notes:**

Meter Volume at Start of Run 6.555
Meter Volume at End of Run 186.161
Total Leak Check Volume .617
Adjusted Final Volume 187.544

.024
.546
.047
.033
.650
.617

M5PG1 WPD June 19, 1998

Run No. Out 1 Date 2-11-99 Sampling Location Furnace Outlet page 1 of 3

Train Type/No. SV M0010 / Out 1 Project No. 4951-03 Operator Griffin

| Traverse Point | Sampling Time, min. | Clock Time (24-Hr) | Dry Gas Meter Reading ($V_m$), $ft^3$ Initial 6.555 Desired | Actual | Velocity Head ($\Delta p$), in. $H_2O$ | Orifice Pressure Differential ($\Delta H$), in. $H_2O$ Desired | Actual | Stack Temp. ($t_s$), °F | Dry Gas Meter Temperature ($t_m$), °F Inlet | Outlet | Pump Vacuum, in. Hg | Silica Gel Impinger Outlet Temp., °F | Probe Liner Outlet Temp., °F | Filter Holder Temp., °F | XAD Cartdg Inlet Temp., °F | Heated Line °F |
|---|---|---|---|---|---|---|---|---|---|---|---|---|---|---|---|---|
| | 0 | 1130 | | | | | | | | | | | | | | |
| A-1 | 12.5 | 1142.5 | 9.43 | 9.72 | 0.41 | 0.20 | 0.20 | 118 | 67 | 67 | 3 | 55 | 248 | 243 | 55 | 250 |
| A-1 | 25 | 1155 | 12.09 | 12.30 | 0.35 | 0.17 | 0.12 | 124 | 72 | 71 | 3 | 54 | 249 | 244 | 54 | 250 |
| A-2 | 37.5 | 1207.5 | 15.09 | 15.47 | 0.45 | 0.21 | 0.19 | 137 | 75 | 72 | 3 | 51 | 251 | 247 | 54 | 244 |
| A-2 | 50 | 1220 | 18.08 | 18.42 | 0.44 | 0.21 | 0.16 | 138 | 78 | 76 | 3 | 50 | 254 | 245 | 55 | 252 |
| A-3 | 62.5 | 1232.5 | 21.25 | 21.64 | 0.49 | 0.24 | 0.19 | 134 | 82 | 79 | 3 | 52 | 248 | 245 | 55 | 249 |
| A-3 | 75 | 1245 | 24.43 | 24.85 | 0.49 | 0.23 | 0.19 | 138 | 83 | 81 | 3 | 52 | 249 | 242 | 54 | 250 |
| A-4 | 87.5 | 1257.5 | 27.53 | 28.04 | 0.46 | 0.22 | 0.18 | 135 | 85 | 82 | 3 | 55 | 254 | 247 | 60 | 242 |
| A-4 | 100 | 1310 | 30.79 | 31.36 | 0.50 | 0.25 | 0.21 | 126 | 86 | 84 | 3 | 43 | 249 | 245 | 43 | 252 |
| A-5 | 112.5 | 1322.5 | 34.10 | 34.56 | 0.50 | 0.25 | 0.20 | 112 | 88 | 86 | 3 | 47 | 248 | 243 | 44 | 247 |
| A-5 | 125 | 1335 | 37.42 | 37.76 | 0.50 | 0.25 | 0.19 | 109 | 88 | 86 | 3 | 51 | 243 | 251 | 49 | 245 |
| A-6 | 137.5 | 1347.5 | 40.71 | 41.02 | 0.50 | 0.25 | 0.19 | 118 | 88 | 86 | 3 | 53 | 248 | 243 | 50 | 247 |
| A-6 | 150 | 1400 | 44.06 | 44.311 | 0.52 | 0.26 | 0.19 | 123 | 88 | 87 | 3 | 55 | 250 | 244 | 51 | 249 |
| A-7 | 162.5 | 1427.5 | 47.40 | 47.43 | 0.45 | 0.22 | 0.17 | 139 | 87 | 86 | 3 | 49 | 248 | 244 | 45 | 252 |
| A-7 | 175 | 1440 | 50.40 | 50.49 | 0.44 | 0.21 | 0.16 | 150 | 86 | 86 | 3 | 51 | 250 | 242 | 46 | 249 |
| A-8 | 187.5 | 1452.5 | 53.56 | 53.70 | 0.48 | 0.23 | 0.18 | 142 | 87 | 86 | 3 | 48 | 249 | 242 | 48 | 247 |
| A-8 | 200 | 1505 | 56.79 | 56.94 | 0.50 | 0.24 | 0.19 | 139 | 87 | 85 | 3 | 46 | 249 | 244 | 49 | 252 |
| A-9 | 212.5 | 1517.5 | 60.16 | 60.26 | 0.52 | 0.26 | 0.21 | 115 | 88 | 86 | 3 | 49 | 249 | 243 | 48 | 251 |
| A-9 | 225 | 1530 | 63.54 | 63.61 | 0.52 | 0.26 | 0.21 | 113 | 88 | 86 | 3 | 50 | 249 | 244 | 48 | 250 |
| A-10 | 237.5 | 1542.5 | 66.85 | 66.97 | 0.50 | 0.25 | 0.20 | 115 | 89 | 87 | 3 | 52 | 249 | 243 | 48 | 251 |
| A-10 | 250 | 1555 | 70.22 | 70.33 | 0.52 | 0.26 | 0.21 | 114 | 89 | 87 | 3 | 52 | 252 | 244 | 49 | 248 |
| A-11 | 262.5 | 1607.5 | 73.61 | 73.76 | 0.53 | 0.26 | 0.21 | 123 | 89 | 87 | 3 | 54 | 249 | 244 | 48 | 249 |
| A-11 | 275 | 1620 | 76.93 | 77.18 | 0.51 | 0.25 | 0.20 | 122 | 89 | 87 | 3 | 52 | 249 | 244 | 48 | 247 |
| A-12 | 287.5 | 1632.5 | 80.09 | 80.28 | 0.47 | 0.23 | 0.18 | 128 | 88 | 86 | 3 | 38 | 248 | 246 | 47 | 250 |
| A-12 | 300 | 1645 | 83.33 | 83.34 | 0.49 | 0.24 | 0.19 | 126 | 87 | 85 | 3 | 38 | 249 | 245 | 47 | 251 |

Down for Leak Check
Initial Vol 44.335
Restart @ 1415

Remarks and Notes:

Run No. 1 Date 2-11-99 Sampling Location Furnace Outlet page 2 of 3

Train Type/No. SV M0010 / OUT 1 Project No. 4951-03 Operator Griffin

| Traverse Point | Sampling Time, min. | Clock Time (24-Hr) | Dry Gas Meter Reading ($V_m$), $ft^3$ Initial 83.910 Desired | Actual | Velocity Head ($\Delta p$), in. $H_2O$ | Orifice Pressure Differential ($\Delta H$), in. $H_2O$ Desired | Actual | Stack Temp. ($t_s$), °F | Dry Gas Meter Temperature ($t_m$), °F Inlet | Outlet | Pump Vacuum, in. Hg | Silica Gel Impinger Outlet Temp., °F | Probe Liner Outlet Temp., °F | Filter Holder Temp., °F | XAD Cartdg Inlet Temp., °F | Heated Line °F |
|---|---|---|---|---|---|---|---|---|---|---|---|---|---|---|---|---|
| B1 | 300 | 1700 | | | | | | | | | | | | | | |
| B1 | 312.5 | 1712.5 | 86.67 | 86.69 | 0.35 | 0.17 | 0.12 | 114 | 85 | 85 | 3 | 51 | 246 | 241 | 48 | 254 |
| B1 | 325 | 1725 | 89.47 | 89.34 | 0.36 | 0.18 | 0.13 | 110 | 84 | 85 | 3.5 | 50 | 248 | 243 | 47 | 253 |
| B2 | 337.5 | 1737.5 | 92.51 | 92.54 | 0.42 | 0.21 | 0.18 | 107 | 86 | 85 | 4 | 44 | 249 | 244 | 45 | 253 |
| B2 | 350 | 1750 | 95.51 | 95.75 | 0.42 | 0.22 | 0.19 | 102 | 87 | 86 | 4 | 44 | 249 | 243 | 44 | 256 |
| B3 | 362.5 | 1802.5 | 98.79 | 98.99 | 0.46 | 0.24 | 0.20 | 95 | 87 | 86 | 4 | 45 | 249 | 243 | 43 | 254 |
| B3 | 375 | 1815 | 101.98 | 102.16 | 0.45 | 0.24 | 0.20 | 93 | 87 | 86 | 4 | 45 | 249 | 242 | 43 | 255 |
| B4 | 387.5 | 1827.5 | 105.01 | 105.10 | 0.41 | 0.21 | 0.16 | 100 | 86 | 86 | 4 | 47 | 246 | 241 | 43 | 256 |
| B4 | 400 | 1840 | 108.05 | 108.04 | 0.43 | 0.21 | 0.16 | 116 | 84 | 85 | 4 | 47 | 248 | 240 | 44 | 255 |
| B5 | 412.5 | 1852.5 | 111.35 | 111.30 | 0.49 | 0.25 | 0.20 | 96 | 82 | 83 | 4 | 47 | 246 | 254 | 44 | 255 |
| B5 | 425 | 1905 | 114.63 | 114.58 | 0.49 | 0.25 | 0.20 | 99 | 81 | 81 | 4 | 47 | 247 | 251 | 44 | 257 |
| B6 | 437.5 | 1917.5 | 117.73 | 117.65 | 0.45 | 0.22 | 0.18 | 114 | 80 | 81 | 4 | 48 | 253 | 252 | 45 | 256 |
| Down * B6 | 450 | 1930 | 120.89 | 120.865 | 0.47 | 0.23 | 0.19 | 114 | 79 | 79 | 4 | 41 | 246 | 250 | 42 | 254 |
| B7 | 462.5 | 1947.5 | 124.09 | 124.09 | 0.47 | 0.24 | 0.20 | 104 | 77 | 78 | 4 | 43 | 244 | 252 | 44 | 256 |
| B7 | 475 | 2000 | 127.29 | 127.28 | 0.47 | 0.24 | 0.20 | 97 | 77 | 78 | 4 | 45 | 247 | 250 | 44 | 254 |
| B8 | 487.5 | 2012.5 | 130.51 | 130.53 | 0.47 | 0.24 | 0.19 | 88 | 77 | 78 | 4 | 41 | 249 | 253 | 41 | 254 |
| B8 | 500 | 2025 | 133.74 | 133.66 | 0.47 | 0.24 | 0.19 | 86 | 77 | 78 | 4 | 42 | 249 | 251 | 41 | 258 |
| B9 | 512.5 | 2037.5 | 136.97 | 136.96 | 0.47 | 0.25 | 0.20 | 85 | 77 | 77 | 4 | 43 | 249 | 252 | 42 | 253 |
| B9 | 525 | 2050 | 140.23 | 140.29 | 0.48 | 0.25 | 0.21 | 86 | 78 | 78 | 4 | 44 | 249 | 253 | 42 | 252 |
| B10 | 537.5 | 2102.5 | 143.58 | 143.62 | 0.50 | 0.26 | 0.21 | 84 | 79 | 78 | 4 | 46 | 250 | 252 | 45 | 252 |
| B10 | 550 | 2115 | 146.88 | 146.95 | 0.49 | 0.26 | 0.21 | 89 | 80 | 79 | 4 | 46 | 250 | 255 | 47 | 251 |
| B11 | 562.5 | 2127.5 | 150.23 | 150.27 | 0.50 | 0.26 | 0.21 | 86 | 82 | 79 | 4 | 49 | 251 | 258 | 47 | 249 |
| B11 | 575 | 2140 | 153.62 | 153.57 | 0.51 | 0.27 | 0.22 | 86 | 83 | 81 | 4 | 49 | 251 | 253 | 47 | 250 |
| B12 | 587.5 | 2152.5 | 156.99 | 156.91 | 0.50 | 0.26 | 0.21 | 84 | 84 | 82 | 4 | 51 | 250 | 254 | 48 | 250 |
| B12 | 600 | 2205 | 160.36 | 160.28 | 0.50 | 0.26 | 0.21 | 84 | 84 | 82 | 4 | 51 | 249 | 254 | 47 | 251 |

Continued on next page

Remarks and Notes:

* Performed train leak check after point B6 Initial Volume: 120.912

Restart Time: 1935

Run No. 1 Date 2-11-99 Sampling Location Furnace Outlet page 3 of 3

Train Type/No. SV M0010 OUT 1 Project No. 4951-03 Operator Griffin

| Traverse Point | Sampling Time, min. | Clock Time (24-Hr) | Dry Gas Meter Reading ($V_m$), $ft^3$ Initial 160.28 | | Velocity Head ($\Delta p$), in. $H_2O$ | Orifice Pressure Differential ($\Delta H$), in. $H_2O$ | | Stack Temp. ($t_s$), °F | Dry Gas Meter Temperature ($t_m$), °F | | Pump Vacuum, in. Hg | Silica Gel Impinger Outlet Temp., °F | Probe Liner Outlet Temp., °F | Filter Holder Temp., °F | XAD Cartdg Inlet Temp., °F | Heated Line °F |
|---|---|---|---|---|---|---|---|---|---|---|---|---|---|---|---|---|
| | 600 | 2205 | Desired | Actual | | Desired | Actual | | Inlet | Outlet | | | | | | |
| B-7 | 612.5 | 2217.5 | 163.59 | 163.58 | 0.46 | 0.24 | 0.19 | 83 | 83 | 82 | 4 | 54 | 249 | 257 | 48 | 250 |
| 7 | 625 | 2230 | 166.82 | 166.66 | 0.46 | 0.24 | 0.19 | 85 | 83 | 82 | 4 | 44 | 249 | 253 | 42 | 249 |
| 7 | 637.5 | 2242.5 | 170.08 | 169.94 | 0.47 | 0.25 | 0.20 | 82 | 82 | 81 | 4 | 40 | 250 | 253 | 41 | 250 |
| 7 | 650 | 2255 | 173.31 | 173.16 | 0.46 | 0.24 | 0.19 | 82 | 81 | 80 | 4 | 47 | 248 | 254 | 44 | 249 |
| 7 | 662.5 | 2307.5 | 176.56 | 176.61 | 0.47 | 0.25 | 0.20 | 82 | 80 | 79 | 4 | 47 | 250 | 253 | 47 | 252 |
| 7 | 675 | 2320 | 179.80 | 179.81 | 0.47 | 0.25 | 0.20 | 84 | 79 | 78 | 4 | 50 | 251 | 253 | 47 | 251 |
| 7 | 687.5 | 2332.5 | 183.00 | 182.96 | 0.46 | 0.24 | 0.19 | 86 | 79 | 77 | 4 | 49 | 248 | 254 | 45 | 249 |
| 7 | 700 | 2345 | 186.22 | 186.161 | 0.47 | 0.24 | 0.20 | 86 | 77 | 76 | 4 | 49 | 249 | 254 | 44 | 252 |

Remarks and Notes: single point sampling, after completing both traverses, until completion of smelting process

# 40 *CFR* 60, APPENDIX A, METHOD 3B
# INTEGRATED GAS SAMPLING DATA

Run No. 1 Date 2-11-99 Client/Source Culp (USEPA)
Project No. 4951-03 Sampling Location Furnace Outlet
Sample Type (Multi-Point, Single-Point) Operator Griffin
Flow Control Device (Valve, Critical Orifice) Bag Type Mylar Sample No. 1020/1020 a
Method 5 Meter Box No. N5 Method 3B Train No. NA
M3B Pump Type Diaphram M3B Flow Meter Type Rotameter
M3B Pump No. N5 M3B Flow Meter No. N-5
Desired Sampling Rate 100 cc/min
Leak Check Before Sampling 0 After Sampling 0
Total Sampling Time 290/290 min Average Flow Meter Reading 1.0
Flow Rate, cc/min: Average 100 Highest 100 Lowest 100
Estimated Total Sample Volume 29/29 liters

| Time (24-Hr) | Flow Meter Reading | Start Purge | Start Sampling | Stop Sampling | Sampling | Remarks and Notes |
|---|---|---|---|---|---|---|
| 1130 | 1.0 | ✓ | | | | |
| 1135 | 1.0 | | ✓ | | ✓ | |
| 1150 | 1.0 | | | | ✓ | No Problems |
| 1210 | 1.0 | | | | ✓ | |
| 1235 | 1.0 | | | | ✓ | |
| 1300 | 1.0 | | | | ✓ | |
| 1325 | 1.0 | | | | ✓ | |
| 1350 | 1.0 | | | | ✓ | |
| 1355 | 1.0 | | | ✓ | | Leak Check M5 train |
| 1415 | 1.0 | ✓ | | | | |
| 1418 | 1.0 | | ✓ | | ✓ | Restart after leak check |
| 1500 | 1.0 | | | | ✓ | |
| 1530 | 1.0 | | | | ✓ | |
| 1600 | 1.0 | | | | | |
| 1630 | 1.0 | | | | | |
| 1647 | 1.0 | | | ✓ | | Port Change |
| 1700 | 1.0 | ✓ | | | | Start 2nd bag sample (1020a) |
| 1705 | 1.0 | | ✓ | | ✓ | |
| 1805 | 1.0 | | | | ✓ | |
| 1900 | 1.0 | | | | ✓ | |
| 1930 | 1.0 | | | ✓ | | |
| 1935 | 1.0 | ✓ | | | | |
| 1945 | 1.0 | | ✓ | | ✓ | |
| 2000 | 1.0 | | | | ✓ | |
| 2200 | 1.0 | | | | ✓ | |
| 2215 | 1.0 | | | ✓ | | Stop Testing on ORSAT |

## 40 *CFR* 60, APPENDIX A, METHOD 3B, GAS ANALYSIS BY ORSAT

Run No. 1 Date 02/11/99

Project No. 4951.03.04.01 Sample No. 1020

Sampling Location Reverberatory Furnace #1 Baghouse Outlet Stack

Analysis Start Time 1750

Sample Type (Bag, Grab) Bag (first half of run)

Analyst J. Surman

Orsat Leak Check Before Analysis:

Burrete No Change in 4 Minutes

Pipettes No Change in 4 Minutes

Orsat Leak Check After Analysis:

Burrete NO Change in 4 Minutes

Pipettes No Change in 4 Minutes

| Analysis | 1 | | 2 | | 3 | | Average Net Value (% v/v) |
|---|---|---|---|---|---|---|---|
| Gas | Actual Reading | Net Value | Actual Reading | Net Value | Actual Reading | Net Value | |
| $CO_2$ | 1 0.4<br>2 0.4<br>3 | 0.4 | 1 0.4<br>2 0.4<br>3 | 0.4 | 1 0.4<br>2 0.4<br>3 | 0.4 | 0.4 |
| $O_2$ (Net is actual reading minus actual $CO_2$ reading) | 1 21.4<br>2 21.4<br>3 | 21.0 | 1 21.4<br>2 21.4<br>3 | 21.0 | 1 21.4<br>2 21.4<br>3 | 21.0 | 21.0 |
| CO (Net is actual reading minus actual $O_2$ reading) | 1<br>2<br>3 | | 1<br>2<br>3 | | 1<br>2<br>3 | | |

Acceptance Criteria per Method 3B

$CO_2$ >4% 0.3% v/v $O_2$ ≥15% 0.2% v/v CO 0.3% v/v

≤4% 0.2% v/v <15% 0.3% v/v

Remarks and Notes:

4951.03 Culp A1 1020
M0010 ORSAT BAG
FURNACE BH OUTLET SAMPLE
For disposal call: J.SURMAN
MIDWEST RESEARCH INSTITUTE

## 40 *CFR* 60, APPENDIX A, METHOD 3B, GAS ANALYSIS BY ORSAT

Run No. 1 Date 02/11/99

Project No. 4951.03.04.01 Sample No. 1020A

Sampling Location Reverberatory Furnace #1 Baghouse Outlet Stack

Analysis Start Time 2305

Sample Type (Bag, Grab) Bag (second half of run)

Analyst J. Surman

Orsat Leak Check Before Analysis:

Burrete No Change in 4 Minutes

Pipettes No Change in 4 Minutes

Orsat Leak Check After Analysis:

Burrete No Change in 4 Minutes

Pipettes No Change in 4 Minutes

| Analysis | 1 | | 2 | | 3 | | Average Net Value (% v/v) |
|---|---|---|---|---|---|---|---|
| Gas | Actual Reading | Net Value | Actual Reading | Net Value | Actual Reading | Net Value | |
| $CO_2$ | 1 0.0<br>2 0.0<br>3 | 0.0 | 1 0.0<br>2 0.0<br>3 | 0.0 | 1 0.0<br>2 0.0<br>3 | 0.0 | 0.0 |
| $O_2$ (Net is actual reading minus actual $CO_2$ reading) | 1 ~~20.9~~ 20.9<br>2 20.9<br>3 | 20.9 | 1 20.9<br>2 20.9<br>3 | 20.9 | 1 20.9<br>2 20.9<br>3 | 20.9 | 20.9 |
| CO (Net is actual reading minus actual $O_2$ reading) | 1<br>2<br>3 | | 1<br>2<br>3 | | 1<br>2<br>3 | | |

Acceptance Criteria per Method 3B

$CO_2$ >4% 0.3% v/v; ≤4% 0.2% v/v

$O_2$ ≥15% 0.2% v/v; <15% 0.3% v/v

CO 0.3% v/v

Remarks and Notes:

4951.03 Culp Al 1020
M0010 ORSAT BAG
FURNACE BH OUTLET SAMPLE
For disposal call: J.SURMAN
MIDWEST RESEARCH INSTITUTE

SW-846, METHOD 0010 - MODIFIED SEMIVOLATILE ORGANICS TRAIN (M0010)
FOR POM AND PAHs
FIELD LABORATORY TRAIN SET-UP DATA

MRI Project No. 4951.03.04.01
Client/Source: U.S. EPA OAQPS EMAD SCG / Side-well Reverberatory Furnace #1
Source Location: Steele, Alabama
Sampling Location: Reverberatory Furnace Baghouse Outlet Stack

Run No. 1 Sampling Train No. OUT-1 Sample Box No. 10
Set-up person(s): J. Surman Date: 02/11/99
Transfer to Sampler:
Relinquished By J. Surman Received By D. Albury Date/Time 02/11/99 0915

| TRAIN COMPONENT | COMPONENT NO. | LOADING DATA | | |
|---|---|---|---|---|
| Sampling Nozzle (Quartz) | OUT-3 * | | Initial Weights (grams)** | |
| Probe (Liner-Glass) | * | | Empty | Loaded |
| Female Probe Outlet Blank-Off | | | | |
| 90° Bypass | | < Heated coupling + Teflon STL | | |
| Filter Holder Front | | | | |
| Filter Holder Back with Teflon®-coated 316 SS Filter Support | | Filter Type: Whatman QM-A | | |
| Short 90° Connector | | | | |
| Condenser (Standard) | | Thermocouple No. 91-11 | | *** |
| XAD-2 Resin Cartridge (Standard) | | ~65 grams XAD-2 Resin + Surrogates | | 500.4 |

*(Documentation of standards injection is separate)*; resin spiked on 02/04/99 and maintained near 4°C until use.

| | | | | |
|---|---|---|---|---|
| 1st Impinger (Mod-GBS) | | Empty | 461.0 | |
| U-Connector (A) | | | | |
| 2nd Impinger (Mod-GBS) | | 100 mLs | 474.2 | 578.8 |
| U-Connector (B) | | ASTM Type II Water | | |
| 3rd Impinger (GBS) | | 100 mLs | 496.3 | 598.7 |
| U-Connector (C) | | ASTM Type II Water | | |
| 4th Impinger (Mod-GBS) | | Empty | 459.0 | |
| U-Connector (D) | | | | |
| 5th Impinger (Mod-GBS) | | ~200 g indicating silica gel | | 675.1 |
| U-Connector (E) | | | | |
| 6th Impinger (Mod-GBS) | | ~200 g indicating silica gel | | 776.2 |
| Impinger Outlet Connector | UH-34 | | | |

* Before and after sampling: Nozzle openings covered with methanol/methylene chloride-rinsed aluminum foil, and nozzle placed in Ziploc® bag. Probe liner outlet sealed with glass female blank-off, and inlet sealed with Teflon® plug. Bypass inlet covered (not sealed) with methanol/methylene chloride-rinsed aluminum foil.

** Initial weights of additional components exchanged during the run also entered here. All exchange component openings covered with methanol/methylene chloride-rinsed aluminum foil or as described above.

*** Cartridge weighed with blank-offs in place; then, cartridge covered with aluminum foil to seal out light during storage and sampling.

Component Changes after Set-up and before Recovery and Other Comments:

SW-846, METHOD 0010 - MODIFIED SEMIVOLATILE ORGANICS TRAIN (M0010)
FOR POM AND PAHs
FIELD LABORATORY SAMPLE RECOVERY DATA

MRI Project No. 4951.03.04.01
Client/Source: U.S. EPA OAQPS EMAD SCG / Side-well Reverberatory Furnace #1
Source Location: Steele, Alabama
Sampling Location: Reverberatory Furnace Baghouse Outlet Stack

Run No. 1 Sampling Train No. OUT-1 Sample Box No. 10
Transfer for Recovery:
Relinquished By D. Alburty Received By J. Surman Date/Time 02/12/99 0010
Sample box recovery person(s): J. Surman Date: 02/12/99
Probe recovery person(s): D. Neal, D. Alburty, D. Griffin, A. Page Date: 02/12/99
Weights below are in grams.

RESIN CARTRIDGE AND IMPINGERS RECOVERY

| Impinger: | XAD-2 Cartridge* | 1st | 2nd | 3rd | 4th | 5th | 6th |
|---|---|---|---|---|---|---|---|
| Final Wt. | 507.7 | 483.2 | 580.0 | 603.3 | 464.0 | 705.8 | 790.4 |
| Initial Wt. | 500.4 | 461.0 | 578.8 | 598.7 | 459.0 | 675.1 | 776.2 |
| Net Wt. | 7.3 | 22.2 | 1.2 | 4.6 | 5.0 | 30.7 | 14.2 |
| Description and/or color: | white | clear | clear | clear | clear | 0 | 25 |
| Sample Recovery: | Cartridge* | 1st Impinger | →→→→ Dispose of properly ←←←← | | | | % Blue |

[ Total Condensate Collected: 85.2 grams]

Sample Number: 1018 1019
Sample Bottle Tare Wt. 493.7
Transfer impinger contents only (i.e., do not add component rinses to this sample).
Sample Bottle Final Wt. ~~493.7~~ 724.5
Net Sample Wt. 230.8
Components Rinsed**: 1st impinger; combine rinses with train rinses below (sample number XX016)

FILTER RECOVERY AND TRAIN RINSES

FILTER:
Sample Number: 1017 Description/Color: black

TRAIN RINSES:
Sample Number: 1016
Sample Bottle Tare Wt. 495.1 coupling and sample transfer line
Components Rinsed***: Front -- nozzle, probe liner, bypass, filter holder front;
Back -- filter support, filter holder back, short 90° connector, condenser

Sample Bottle Final Wt. 1103.6
Net Sample Wt. 608.5

* Replace blank-offs and remove aluminum foil, then weigh the cartridge; replace aluminum foil to cover the entire cartridge.
** Methanol/methylene chloride (1:1 v/v) rinses 3 times; add rinses to train rinses (sample number XX016).
*** Methanol/methylene chloride (1:1 v/v) rinses with brushing of front components 3 times or more until perceivably clean, and methanol/methylene chloride (1:1 v/v) rinses of back components 3 times, but without brushing, and including 5-minute soaks of underlined components 3 times.

COMMENTS:

# FIELD SAMPLING DATA FOR METHOD 5 TYPE TRAINS



Run No. INLET 2 Date 2-12-99
Project No. 4951-04-05-01
Client US EPA
Source FURNACE #1
Sampling Location INLET
Train Type/No. 1-IN-2
Operator D. NEAL
Record data every 10 minutes
Nozzle No. IN-4 Type: QUARTZ
Nozzle Tip Diameter 0.147 in
Pitot Tube No. M-106 $C_p$ ~~0.8271~~ 0.827

Stack Thermocouple No. 48-14
Probe No. 4-2 Length: 4 ft
Liner Type GLASS Heated? (Y) n
Sample Box No. ~~10285~~ 10285 W/ 12' HEATED TEFLON
Filter No. N/A
Umbilical/Impinger Hookup UH-12
Umbilical Nos. N-178-8
Meter Box No. N6
Temp. Controller No. N6
Temp. Meter No. N6
DGM Correction (Y) 0.985

Orifice Meter ΔH@ 2.068
Barometer No. ~~27~~ X-4029
Barometric Pressure 29.72 in Hg
Elevation to Meter Box 0 ft
Meter Box $P_{bar}$ 29.72 in Hg
Elevation to Sampling Loc. 0 ft
Sampling Location $P_{bar}$ 29.72 in Hg
Static Pressure -1.7 in $H_2O$
Assumed Moisture 2.76 %
Assumed $\%CO_2$ 0.5 $\%O_2$ 20

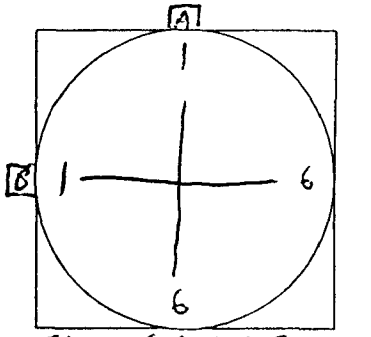


FLOW IS GOING TOWARD OBSERVER
Traverse Point Layout

**Pitot Tube Pressure Measurement System Leak Checks**

| | Initial | Final | Initial | Final | Initial | Final | Initial | Final | Initial | Final |
|---|---|---|---|---|---|---|---|---|---|---|
| Time (24 Hr) | 0952 | 2318 | | | | | | | | |
| Pass or Fail | PASS | PASS | | | | | | | | |

**Sampling Train Leak Checks**

| | Initial | Final | Initial | Final | ~~Initial~~ Final | ~~Final~~ Initial | ~~Initial~~ Final | ~~Final~~ Initial | Initial | Final |
|---|---|---|---|---|---|---|---|---|---|---|
| Time (24 Hr) | 0956 | N/A | 1039 | 1758 | 1534 | | 1844 | 1850 | | 2318 |
| Vacuum, in Hg | 15" Hg | | 15" Hg | 3.5 Hg | 4.5 Hg. DN | ~~4.5~~ 15" Hg | 6.0" Hg | 15" Hg | | 6.0" Hg |
| Leak Rate, cfm | .007 | | .004 | .001 | .001 | .002 | .008 | .003 | | .001 |
| Final Meter Volume | | 564.692 | | 606.035 | | 652.538 | | 702.228 | | |
| Initial Meter Volume | | 564.471 | | 605.976 | | 652.297 | ~~702.177~~ | 701.977 | | |
| Leak Check Volume | | 0.221 | | 0.059 | | 0.241 | DN 2-12-99 | 0.251 | | |

Remarks and Notes:

Meter Volume at Start of Run 558.475
Meter Volume at End of Run 796.715
Total Leak Check Volume 0.551
Adjusted Final Volume 796.164

Run No. INLET 2 Date 2-12-97 Sampling Location FURNACE INLET page 1 of 3

Train Type/No. 1-IN-2 Project No. 4951-09-04-01 Operator D. NEAL

| Traverse Point | Sampling Time, min. | Clock Time (24-Hr) | Dry Gas Meter Reading ($V_m$), $ft^3$ Initial 559.275 Desired | Actual | (2) Velocity Head ($\Delta p$), in. $H_2O$ | Orifice Pressure Differential ($\Delta H$), in. $H_2O$ Desired | Actual | (2) Stack Temp. ($t_s$), °F | Dry Gas Meter Temperature ($t_m$), °F Inlet | Outlet | Pump Vacuum, in. Hg | Silica Gel Impinger Outlet Temp., °F | Probe Liner Outlet Temp., °F | Filter Holder Temp., °F | XAD Cartdg Inlet Temp., °F | HEATED LINE TEMP °F |
|---|---|---|---|---|---|---|---|---|---|---|---|---|---|---|---|---|
| | 0 | 1015 | | | | | | | | | | | | | | |
| A-6 | 10 | 1025 | 561.366 | 561.385 | .80 | .36 | .31 | 140 | 42 | 41 | 3.0 | 36 | 240 | 239 | 38 | 234 |
| (1) 6 | 20 | 1035 | 564.439 | 564.421 | .75 | .35 | .28 | 115 | 45 | 43 | 3.0 | 34 | 241 | 242 | 37 | 236 |
| 6 | 30 | 1055 | 567.590 | 567.475 | .78 | .32 | .26 | 200 | 48 | 48 | 3.0 | 34 | 239 | 242 | 40 | 248 |
| 6 | 40 | 1105 | 570.535 | 570.455 | .80 | .32 | .28 | 225 | 52 | 49 | 3.0 | 35 | 241 | 241 | 43 | 252 |
| 6 | 50 | 1115 | 573.455 | 573.505 | .75 | .31 | .28 | 200 | 55 | 51 | 3.0 | 36 | 240 | 241 | 41 | 250 |
| 5 | 60 | 1125 | 576.683 | 576.785 | .80 | .38 | .33 | 120 | 57 | 53 | 3.0 | 36 | 240 | 241 | 41 | 254 |
| 5 | 70 | 1135 | 579.925 | 580.005 | .80 | .38 | .31 | 120 | 59 | 55 | 3.0 | 36 | 242 | 241 | 41 | 242 |
| 5 | 80 | 1145 | 583.075 | 583.075 | .75 | .36 | .28 | 120 | 61 | 57 | 3.0 | 36 | 241 | 241 | 40 | 246 |
| 5 | 90 | 1155 | 586.264 | 586.200 | .78 | .37 | .29 | 130 | 61 | 58 | 3.0 | 36 | 241 | 240 | 41 | 243 |
| 5 | 100 | 1205 | 589.389 | 589.285 | .80 | .35 | .29 | 175 | 63 | 60 | 3.0 | 36 | 240 | 242 | 42 | 248 |
| 4 | 110 | 1215 | 592.486 | 592.485 | .70 | .35 | .30 | 110 | 65 | 62 | 3.5 | 36 | 239 | 241 | 42 | 251 |
| 4 | 120 | 1225 | 595.832 | 595.905 | .80 | .40 | .35 | 100 | 66 | 63 | 3.5 | 36 | 240 | 241 | 43 | 246 |
| 4 | 130 | 1235 | 599.261 | 599.375 | .82 | .42 | .35 | 90 | 68 | 64 | 3.5 | 36 | 239 | 241 | 43 | 245 |
| 4 | 140 | 1245 | 602.668 | 602.735 | .82 | .42 | .33 | 100 | 69 | 66 | 3.5 | 37 | 239 | 240 | 42 | 243 |
| 4 | 150 | 1255 | 605.976 | 605.976 | .80 | .39 | .30 | 120 | 69 | 66 | 3.5 | 37 | 239 | 240 | 42 | 247 |
| | | | | STOP SAMPLING FOR SCHEDULED LEAK CHECK | | | | | | | | | | | | |
| | | | | | | | | | | | | | | | | |
| | 0 | 1300 | 606.035 | | | | | | | | | | | | | |
| A-3 | 10 | 1310 | 609.345 | 609.210 | .80 | .37 | .32 | 120 | 68 | 68 | 3.5 | 38 | 240 | 241 | 44 | 254 |
| 3 | 20 | 1320 | 612.562 | 612.500 | .78 | .37 | .32 | 140 | 68 | 68 | 3.5 | 38 | 240 | 243 | 42 | 248 |
| 3 | 30 | 1330 | 615.632 | 615.630 | .78 | .34 | .29 | 200 | 70 | 68 | 3.5 | 38 | 240 | 240 | 43 | 245 |
| 3 | 40 | 1340 | 618.630 | 618.630 | .70 | .32 | .27 | 160 | 69 | 68 | 3.5 | 39 | 238 | 240 | 44 | 243 |
| 3 | 50 | 1350 | 621.332 | 621.275 | .65 | .26 | .20 | 250 | 69 | 69 | 3.5 | 41 | 240 | 237 | 51 | 248 |
| 2 | 60 | 1400 | 624.031 | 624.035 | .55 | .26 | .21 | 140 | 68 | 68 | 3.5 | 42 | 239 | 238 | 51 | 242 |
| 2 | 70 | 1410 | 627.338 | 627.265 | .85 | .39 | .32 | 160 | 69 | 69 | 4.0 | 42 | 240 | 244 | 53 | 245 |
| 2 | 80 | 1420 | 630.752 | 630.840 | .82 | .42 | .37 | 100 | 69 | 68 | 4.5 | 42 | 239 | 242 | 52 | 255 |
| 2 | 90 | 1430 | 634.259 | 634.375 | .85 | .44 | .37 | 90 | 69 | 68 | 4.5 | 41 | 238 | 237 | 49 | 247 |
| 2 | 100 | 1440 | 637.383 | 637.480 | .78 | .35 | .29 | 175 | 68 | 68 | 4.5 | 41 | 238 | 241 | 49 | 230 |

Remarks and Notes: (1) STOP RUN ON THIS TRAIN ONLY TO VERIFY NOZZLE LEAK CHECK BECAUSE OF LOW VACUUM. LEAK CHECK WAS GOOD AT .004 RESUME SAMPLING AT 1045

(2) NOTE THAT BECAUSE OF RAPID EXTREME FLUCTUATIONS IN STACK TEMP AND DELTA P THOSE READINGS ARE AVERAGES.

Run No. INLET-2 Date 2-12-99 Sampling Location FURNACE INLET page 2 of 3

Train Type/No. 1-IN-2 Project No. 4951-09-04-01 Operator D. NEAL

| Traverse Point | Sampling Time, min. | Clock Time (24-Hr) | Dry Gas Meter Reading ($V_m$), $ft^3$ Initial 637.383 Desired | Actual | (2) Velocity Head ($\Delta p$), in. $H_2O$ | Orifice Pressure Differential ($\Delta H$), in. $H_2O$ Desired | Actual | (2) Stack Temp. ($t_s$), °F | Dry Gas Meter Temperature ($t_m$), °F Inlet | Outlet | Pump Vacuum, in. Hg | Silica Gel Impinger Outlet Temp., °F | Probe Liner Outlet Temp., °F | Filter Holder Temp., °F | XAD Cartdg Inlet Temp., °F | HEATED LINE TEMP °F |
|---|---|---|---|---|---|---|---|---|---|---|---|---|---|---|---|---|
| | 100 | 1440 | | | | | | | | | | | | | | |
| A-1 | 110 | 1450 | 640.388 | 640.390 | .75 | 0.32 | 0.25 | 200 | 68 | 68 | 4.0 | 43 | 239 | 242 | 51 | 225 |
| 1 | 120 | 1500 | 643.329 | 643.275 | .72 | 0.31 | 0.25 | 200 | 68 | 67 | 4.0 | 44 | 241 | 242 | 51 | 244 |
| 1 | 130 | 1510 | 646.358 | 646.260 | .70 | 0.33 | 0.26 | 145 | 68 | 67 | 4.0 | 39 | 237 | 239 | 47 | 249 |
| 1 | 140 | 1520 | 649.252 | 649.235 | .70 | 0.30 | 0.26 | 200 | 67 | 66 | 4.0 | 43 | 241 | 241 | 48 | 252 |
| 1 | 150 | 1530 | 652.289 | 652.297 | .67 | 0.33 | 0.28 | 115 | 68 | 66 | 4.5 | 43 | 240 | 241 | 47 | 247 |
| | | | | PORT CHANGE | | | | | | | | | | | | |
| | 0 | 1610 | 652.538 | | | | | | | | | | | | | |
| B-1 | 10 | 1620 | 655.623 | 655.650 | .73 | 0.34 | 0.29 | 140 | 64 | 64 | 3.5 | 45 | 240 | 240 | 50 | 246 |
| 1 | 20 | 1630 | 659.013 | 658.985 | .82 | 0.42 | 0.36 | 95 | 62 | 63 | 4.5 | 39 | 240 | 241 | 49 | 234 |
| 1 | 30 | 1640 | 661.969 | 661.890 | .85 | 0.31 | 0.26 | 300 | 64 | 63 | 4.0 | 39 | 240 | 241 | 48 | 242 |
| 1 | 40 | 1650 | 664.906 | 664.800 | .70 | 0.31 | 0.26 | 175 | 64 | 64 | 4.5 | 39 | 240 | 241 | 48 | 255 |
| 1 | 50 | 1700 | 668.046 | 668.010 | .77 | 0.35 | 0.30 | 150 | 64 | 63 | 5.0 | 38 | 241 | 240 | 45 | 249 |
| 2 | 60 | 1710 | 671.379 | 671.400 | .90 | 0.40 | 0.35 | 175 | 65 | 64 | 5.0 | 37 | 242 | 242 | 39 | 250 |
| 2 | 70 | 1720 | 674.893 | 674.870 | 1.0 | 0.44 | 0.38 | 175 | 65 | 64 | 5.5 | 37 | 239 | 242 | 38 | 250 |
| 2 | 80 | 1730 | 678.332 | 678.470 | 1.0 | 0.43 | 0.38 | 200 | 64 | 63 | 6.0 | 36 | 241 | 241 | 37 | 249 |
| 2 | 90 | 1740 | 681.773 | 681.825 | 1.0 | 0.43 | 0.36 | 200 | 64 | 63 | 5.5 | 37 | 240 | 241 | 37 | 242 |
| 2 | 100 | 1750 | 685.390 | 685.290 | .98 | 0.47 | 0.38 | 125 | 64 | 63 | 6.0 | 37 | 242 | 241 | 38 | 238 |
| 3 | 110 | 1800 | 688.798 | 688.715 | .87 | 0.42 | 0.36 | 125 | 64 | 63 | 6.0 | 36 | 238 | 242 | 38 | 246 |
| 3 | 120 | 1810 | 692.063 | 692.015 | .87 | 0.38 | 0.33 | 175 | 63 | 62 | 6.0 | 36 | 240 | 242 | 38 | 267 |
| 3 | 130 | 1820 | 695.277 | 695.290 | .80 | 0.37 | 0.33 | 140 | 62 | 61 | 6.0 | 36 | 240 | 242 | 38 | 255 |
| 3 | 140 | 1830 | 698.551 | 698.540 | .80 | 0.39 | 0.33 | 115 | 60 | 60 | 6.0 | 36 | 241 | 240 | 38 | 248 |
| 3 | 150 | 1840 | 701.964 | 701.977 | .85 | 0.42 | 0.37 | 100 | 59 | 59 | 6.0 | 36 | 242 | 241 | 36 | 251 |
| | | | | STOP SAMPLING FOR SCHEDULED LEAK CHECK | | | | | | | | | | | | |
| | 0 | 1855 | 702.228 | | | | | | | | | | | | | |
| B-4 | 10 | 1905 | 705.876 | 705.800 | .94 | 0.49 | 0.42 | 76 | 56 | 56 | 5.0 | 34 | 239 | 240 | 36 | 254 |
| 4 | 20 | 1915 | 709.517 | 709.465 | .94 | 0.49 | 0.42 | 76 | 55 | 55 | 5.0 | 34 | 239 | 241 | 35 | 252 |
| 4 | 30 | 1925 | 713.158 | 713.160 | .94 | 0.49 | 0.43 | 76 | 55 | 55 | 5.0 | 36 | 242 | 240 | 36 | 247 |
| 4 | 40 | 1935 | 716.802 | 716.860 | .94 | 0.49 | 0.43 | 76 | 56 | 55 | 5.0 | 36 | 240 | 241 | 36 | 253 |

Remarks and Notes:

Run No. INLET-2 Date 2-12-99 Sampling Location FURNACE INLET page 3 of 3

Train Type/No. 1-IN-2 Project No. 4951-03-04-01 Operator D. NEOL

| Traverse Point | Sampling Time, min. | Clock Time (24-Hr) | Dry Gas Meter Reading ($V_m$), $ft^3$ Initial 716.602 Desired | Actual | (2) Velocity Head ($\Delta p$), in. $H_2O$ | Orifice Pressure Differential ($\Delta H$), in. $H_2O$ Desired | Actual | (2) Stack Temp. ($t_s$), °F | Dry Gas Meter Temperature ($t_m$), °F Inlet | Outlet | Pump Vacuum, in. Hg | Silica Gel Impinger Outlet Temp., °F | Probe Liner Outlet Temp., °F | Filter Holder Temp., °F | XAD Cartdg Inlet Temp., °F | HEATED LINE TEMP. °F |
|---|---|---|---|---|---|---|---|---|---|---|---|---|---|---|---|---|
| | 40 | 1935 | | | | | | | | | | | | | | |
| B-4 | 50 | 1945 | 720.443 | 720.505 | .94 | 0.49 | 0.42 | 78 | 57 | 55 | 5.0 | 36 | 242 | 242 | 35 | 248 |
| 5 | 60 | 1955 | 724.084 | 724.100 | .94 | 0.49 | 0.40 | 76 | 56 | 54 | 5.0 | 37 | 240 | 241 | 36 | 256 |
| 5 | 70 | 2005 | 727.723 | 727.675 | .93 | 0.49 | 0.40 | 73 | 57 | 55 | 5.0 | 37 | 244 | 241 | 36 | 252 |
| 5 | 80 | 2015 | 731.369 | 731.355 | .93 | 0.49 | 0.42 | 73 | 58 | 56 | 5.0 | 37 | 240 | 241 | 37 | 249 |
| 5 | 90 | 2025 | 734.916 | 734.920 | .88 | 0.46 | 0.39 | 73 | 58 | 56 | 5.0 | 37 | 241 | 242 | 37 | 259 |
| 5 | 100 | 2035 | 738.559 | 738.550 | .92 | 0.48 | 0.41 | 72 | 59 | 58 | 5.0 | 37 | 240 | 242 | 37 | 256 |
| 6 | 110 | 2045 | 742.074 | 742.190 | .95 | 0.48 | 0.41 | 71 | 59 | 58 | 5.0 | 38 | 244 | 242 | 36 | 251 |
| 6 | 120 | 2055 | 745.714 | 745.765 | .92 | 0.48 | 0.40 | 72 | 58 | 58 | 5.0 | 37 | 240 | 241 | 36 | 253 |
| 6 | 130 | 2105 | 749.353 | 749.370 | .92 | 0.48 | 0.40 | 72 | 58 | 58 | 5.0 | 37 | 240 | 242 | 36 | 248 |
| 6 | 140 | 2115 | 753.015 | 752.980 | .93 | 0.49 | 0.41 | 71 | 58 | 57 | 5.0 | 37 | 242 | 241 | 36 | 253 |
| 6 | 150 | 2125 | 756.691 | 756.625 | .94 | 0.49 | 0.42 | 72 | 58 | 57 | 5.0 | 37 | 240 | 241 | 35 | 251 |
| 5 | 160 | 2135 | 760.359 | 760.295 | .94 | 0.49 | 0.42 | 72 | 57 | 56 | 5.0 | 37 | 239 | 241 | 36 | 255 |
| 5 | 170 | 2145 | 764.082 | 764.145 | .97 | 0.51 | 0.46 | 72 | 57 | 55 | 5.0 | 37 | 238 | 241 | 35 | 249 |
| 5 | 180 | 2155 | 767.724 | 767.715 | .93 | 0.49 | 0.41 | 72 | 56 | 55 | 5.0 | 37 | 237 | 240 | 36 | 248 |
| 5 | 190 | 2205 | 771.320 | 771.250 | .91 | 0.47 | 0.39 | 73 | 56 | 55 | 5.0 | 37 | 241 | 241 | 36 | 259 |
| 5 | 200 | 2215 | 774.938 | 774.870 | .92 | 0.48 | 0.41 | 72 | 56 | 54 | 5.0 | 37 | 240 | 240 | 37 | 245 |
| 5 | 210 | 2225 | 778.547 | 778.575 | .92 | 0.48 | 0.42 | 74 | 56 | 54 | 5.0 | 37 | 238 | 240 | 36 | 242 |
| 5 | 220 | 2235 | 782.133 | 782.150 | .91 | 0.47 | 0.42 | 75 | 56 | 54 | 5.0 | 37 | 240 | 241 | 36 | 254 |
| 5 | 230 | 2245 | 785.784 | 785.815 | .94 | 0.49 | 0.43 | 74 | 56 | 55 | 5.0 | 37 | 236 | 240 | 36 | 251 |
| 5 | 240 | 2255 | 789.428 | 789.500 | .94 | 0.49 | 0.41 | 75 | 56 | 54 | 5.0 | 37 | 242 | 241 | 36 | 250 |
| 5 | 250 | 2305 | 793.072 | 793.095 | .94 | 0.49 | 0.41 | 75 | 56 | 54 | 5.0 | 36 | 240 | 240 | 36 | 247 |
| 5 | 260 | 2315 | 796.710 | 796.715 | .94 | 0.49 | 0.40 | 77 | 56 | 54 | 5.0 | 36 | 240 | 241 | 36 | 249 |

Remarks and Notes:

# 40 *CFR* 60, APPENDIX A, METHOD 3B
# INTEGRATED GAS SAMPLING DATA



Run No. 7 Date 2-12-99 Client/Source US EPA / FURNACE
Project No. 4951-03-07-01 Sampling Location INLET
Sample Type (Multi-Point, Single-Point) Operator D. NEAL
Flow Control Device (Valve, Critical Orifice) Bag Type MYLAR Sample No. 7015
Method 5 Meter Box No. N6 Method 3B Train No. N/A
M3B Pump Type ~~Rotameter~~ Diaphram M3B Flow Meter Type ~~N/A~~ Rotameter
M3B Pump No. N6 M3B Flow Meter No. ~~N/A~~ N-6
Desired Sampling Rate 50 cc/min
Leak Check Before Sampling Pass After Sampling Pass
Total Sampling Time 570 min Average Flow Meter Reading 0.5
Flow Rate, cc/min: Average 50 Highest 50 Lowest 50
Estimated Total Sample Volume 29 liters

| Time (24-Hr) | Flow Meter Reading | Start Purge | Start Sampling | Stop Sampling | Sampling | Remarks and Notes |
|---|---|---|---|---|---|---|
| 1014 | 0.5 | ✓ | | | | |
| 1015 | 0.5 | | ✓ | | | |
| 1025 | 0.5 | | | | ✓ | |
| 1035 | 0.5 | | | ✓ | | STOP INLET ONLY TO VERIFY LEAK CHECK |
| 1045 | 0.5 | | ✓ | | | DUE TO LOW VACUUM |
| 1055 | 0.5 | | | | ✓ | |
| 1105 | 0.5 | | | | ✓ | |
| 1115 | 0.5 | | | | ✓ | |
| 1125 | 0.5 | | | | ✓ | |
| 1135 | 0.5 | | | | ✓ | |
| 1145 | 0.5 | | | | ✓ | |
| 1155 | 0.5 | | | | ✓ | |
| 1205 | 0.5 | | | | ✓ | |
| 1215 | 0.5 | | | | ✓ | |
| 1225 | 0.5 | | | | ✓ | |
| 1235 | 0.5 | | | | ✓ | |
| 1245 | 0.5 | | | | ✓ | |
| 1255 | 0.5 | | | ✓ | | FOR SCHEDULED LEAK CHECK |
| 1300 | 0.5 | | ✓ | | | |
| 1310 | 0.5 | | | | ✓ | |
| 1320 | 0.5 | | | | ✓ | |
| 1330 | 0.5 | | | | ✓ | |
| 1340 | 0.5 | | | | ✓ | |
| 1350 | 0.5 | | | | ✓ | |
| 1400 | 0.5 | | | | ✓ | |
| 1410 | 0.5 | | | | ✓ | |

# 40 *CFR* 60, APPENDIX A, METHOD 3B
## INTEGRATED GAS SAMPLING DATA



Run No. INLET-2 Date 2-12-99 Client/Source US EPA / FURNACE
Project No. 4951-04-03-01 Sampling Location INLET
Sample Type (Multi-Point) Single-Point) Operator D. NEAL
Flow Control Device (Valve), ~~Critical Orifice~~ Bag Type MYLAR Sample No. 2015
Method 5 Meter Box No. N6 Method 3B Train No. N/A
M3B Pump Type ~~Rotameter Dizphram~~ M3B Flow Meter Type ~~Rotameter~~ Rotameter
M3B Pump No. N6 M3B Flow Meter No. ~~N/A~~ N-6
Desired Sampling Rate 50 cc/min
Leak Check Before Sampling PASS After Sampling PASS
Total Sampling Time 570 min Average Flow Meter Reading 0.5
Flow Rate, cc/min: Average 50 Highest 50 Lowest 50
Estimated Total Sample Volume 29 liters

| Time (24-Hr) | Flow Meter Reading | Start Purge | Start Sampling | Stop Sampling | Sampling | Remarks and Notes |
|---|---|---|---|---|---|---|
| 1420 | 0.5 | | | | ✓ | |
| 1430 | 0.5 | | | | ✓ | |
| 1440 | 0.5 | | | | ✓ | |
| 1450 | 0.5 | | | | ✓ | |
| 1500 | 0.5 | | | | ✓ | |
| 1510 | 0.5 | | | | ✓ | |
| 1520 | 0.5 | | | | ✓ | |
| 1530 | 0.5 | | | ✓ | | PORT CHANGE |
| 1610 | 0.5 | | ✓ | | | |
| 1620 | 0.5 | | | | ✓ | |
| 1630 | 0.5 | | | | ✓ | |
| 1640 | 0.5 | | | | ✓ | |
| 1650 | 0.5 | | | | ✓ | |
| 1700 | 0.5 | | | | ✓ | |
| 1710 | 0.5 | | | | ✓ | |
| 1720 | 0.5 | | | | ✓ | |
| 1730 | 0.5 | | | | ✓ | |
| 1740 | 0.5 | | | | ✓ | |
| 1750 | 0.5 | | | | ✓ | |
| 1800 | 0.5 | | | | ✓ | |
| 1810 | 0.5 | | | | ✓ | |
| 1820 | 0.5 | | | | ✓ | |
| 1830 | 0.5 | | | | ✓ | |
| 1840 | 0.5 | | | ✓ | | FOR SCHEDULED LEAK CHECK |
| 1855 | 0.5 | | ✓ | | | |
| 1905 | 0.5 | | ✓ DJ 2-12-99 | | ✓ | |

# 40 *CFR* 60, APPENDIX A, METHOD 3B
# INTEGRATED GAS SAMPLING DATA



Run No. INLET-2 Date 2-12-99 Client/Source US EPA / FURNACE
Project No. 4951-04-03-01 Sampling Location INLET
Sample Type (Multi-Point) Single-Point) Operator D. NEAL
Flow Control Device (Valve) ~~Critical Orifice~~ Bag Type MYLAR Sample No. 2015
Method 5 Meter Box No. N6 Method 3B Train No. N/A
M3B Pump Type ~~ROTAMETER Diaphram~~ M3B Flow Meter Type ~~Rotameter~~ Rotameter
M3B Pump No. N6 M3B Flow Meter No. ~~N/A~~ N-6
Desired Sampling Rate 50 cc/min
Leak Check Before Sampling PASS After Sampling PASS
Total Sampling Time _____ min Average Flow Meter Reading 0.5
Flow Rate, cc/min: Average 50 Highest 50 Lowest 50
Estimated Total Sample Volume _____ liters

| Time (24-Hr) | Flow Meter Reading | Start Purge | Start Sampling | Stop Sampling | Sampling | Remarks and Notes |
|---|---|---|---|---|---|---|
| 1915 | 0.5 | | | | ✓ | |
| 1925 | 0.5 | | | | ✓ | |
| 1935 | 0.5 | | | | ✓ | |
| 1945 | 0.5 | | | | ✓ | |
| 1955 | 0.5 | | | | ✓ | |
| 2005 | 0.5 | | | | ✓ | |
| 2015 | 0.5 | | | | ✓ | |
| 2025 | 0.5 | | | | ✓ | |
| 2035 | 0.5 | | | | ✓ | |
| 2045 | 0.5 | | | | ✓ | |
| 2055 | 0.5 | | | ✓ | | BAG FULL |
| | | | | | | |
| | | | | | | |
| | | | | | | |
| | | | | | | |
| | | | | | | |
| | | | | | | |
| | | | | | | |
| | | | | | | |
| | | | | | | |
| | | | | | | |
| | | | | | | |
| | | | | | | |
| | | | | | | |
| | | | | | | |
| | | | | | | |

## 40 *CFR* 60, APPENDIX A, METHOD 3B, GAS ANALYSIS BY ORSAT

Run No. 2 Date 02/12/99

Project No. 4951.03.04.01 Sample No. 2015

Sampling Location Reverberatory Furnace #1 Baghouse Inlet Duct

Analysis Start Time 2110

Sample Type (Bag, Grab) Bag

Analyst J. Surman

Orsat Leak Check Before Analysis:

Burrete No Change in 4 Minutes

Pipettes No Change in 4 Minutes

Orsat Leak Check After Analysis:

Burrete No Change in 4 Minutes

Pipettes No Change in 4 Minutes

| Analysis | 1 | | 2 | | 3 | | Average Net Value (% v/v) |
|---|---|---|---|---|---|---|---|
| Gas | Actual Reading | Net Value | Actual Reading | Net Value | Actual Reading | Net Value | |
| $CO_2$ | 1 0.2<br>2 0.2<br>3 | 0.2 | 1 0.2<br>2 0.2<br>3 | 0.2 | 1 0.2<br>2 0.2<br>3 | 0.2 | 0.2 |
| $O_2$ (Net is actual reading minus actual $CO_2$ reading) | 1 21.1<br>2 21.1<br>3 | 20.9 | 1 21.1<br>2 21.1<br>3 | 20.9 | 1 21.1<br>2 21.1<br>3 | 20.9 | 20.9 |
| CO (Net is actual reading minus actual $O_2$ reading) | 1<br>2<br>3 | | 1<br>2<br>3 | | 1<br>2<br>3 | | |

Acceptance Criteria per Method 3B

$CO_2$ >4% 0.3% v/v $O_2$ ≥15% 0.2% v/v CO 0.3% v/v

≤4% 0.2% v/v <15% 0.3% v/v

Remarks and Notes:

4951.03 Culp Al 2015
M0010 ORSAT BAG
FURNACE BH INLET SAMPLE
For disposal call: J.SURMAN
MIDWEST RESEARCH INSTITUTE

SW-846, METHOD 0010 - MODIFIED SEMIVOLATILE ORGANICS TRAIN (M0010)
FOR POM AND PAHs
FIELD LABORATORY TRAIN SET-UP DATA

MRI Project No. 4951.03.04.01
Client/Source: U.S. EPA OAQPS EMAD SCG / Side-well Reverberatory Furnace #1
Source Location: Steele, Alabama
Sampling Location: Reverberatory Furnace Baghouse Inlet Duct

Run No. 2 Sampling Train No. IN-2 Sample Box No. 10285
Set-up person(s): J. Surman Date: 02/12/99
Transfer to Sampler:
Relinquished By J. Surman Received By A. Page Date/Time 02/12/99 0840

| TRAIN COMPONENT | COMPONENT NO. | | LOADING DATA | |
|---|---|---|---|---|
| | | | Initial Weights (grams)** | |
| | | | Empty | Loaded |
| Sampling Nozzle (Quartz) | IN-4 | * | | |
| Probe (Liner-Glass) | | * | | |
| Female Probe Outlet Blank-Off | | | | |
| Heated Coupling & Teflon® STL | | * | | |
| 90° Bypass | | * or | | |
| ~~Cyclone~~ | | * and | | |
| ~~Flask~~ | | | | |
| Filter Holder Front | | | | |
| Filter Holder Back with Teflon®-coated 316 SS Filter Support | | Filter Type: Whatman QM-A | | |
| Short 90° Connector | | | | |
| Condenser (Standard) | | Thermocouple No. XAD-4 | | *** |
| XAD-2 Resin Cartridge (Standard) | | ~65 grams XAD-2 Resin + Surrogates | 500.8 | |

*(Documentation of standards injection is separate)*; resin spiked on 02/04/99 and maintained near 4°C until use.

| | | | | |
|---|---|---|---|---|
| 1st Impinger (Mod-GBS) | | Empty | 463.9 | |
| U-Connector (A) | | | | |
| 2nd Impinger (Mod-GBS) | | 100 mLs | 476.2 | 580.8 |
| U-Connector (B) | | ASTM Type II Water | | |
| 3rd Impinger (GBS) | | 100 mLs | 522.7 | 626.9 |
| U-Connector (C) | | ASTM Type II Water | | |
| 4th Impinger (Mod-GBS) | | Empty | 489.1 | |
| U-Connector (D) | | | | |
| 5th Impinger (Mod-GBS) | | ~200 g indicating silica gel | | -684.7 |
| U-Connector (E) | | | | |
| 6th Impinger (Mod-GBS) | | ~200 g indicating silica gel | | 668.9 |
| Impinger Outlet Connector | UH-12 | | | |

* Before and after sampling: Nozzle openings covered with methanol/methylene chloride-rinsed aluminum foil, and nozzle placed in Ziploc® bag. Probe liner outlet sealed with glass female blank-off, and inlet sealed with Teflon® plug. Cyclone/Bypass inlet covered (not sealed) with methanol/methylene chloride-rinsed aluminum foil. Sample transfer line (STL) openings joined with glass/Teflon® coupling used at filter holder outlet during sampling.

** Initial weights of additional components exchanged during the run also entered here. All exchange component openings covered with methanol/methylene chloride-rinsed aluminum foil or as described above.

*** Cartridge weighed with blank-offs in place; then, cartridge covered with aluminum foil to seal out light during storage and sampling.

Component Changes after Set-up and before Recovery and Other Comments:

# SW-846, METHOD 0010 - MODIFIED SEMIVOLATILE ORGANICS TRAIN (M0010) FOR POM AND PAHs
## FIELD LABORATORY SAMPLE RECOVERY DATA

MRI Project No. 4951.03.04.01
Client/Source: U.S. EPA OAQPS EMAD SCG / Side-well Reverberatory Furnace #1
Source Location: Steele, Alabama
Sampling Location: Reverberatory Furnace Baghouse Inlet Duct

Run No. 2 Sampling Train No. IN-2 Sample Box No. 10285
Transfer for Recovery:
Relinquished By A.Page Received By J.Surman Date/Time 02/12/99 2330
Sample box recovery person(s): J.Surman Date: 02/12/99
Probe/STL recovery person(s): D.Neal, D.Albarty, D.Griffin, A.Page Date: 02/12/99
Weights below are in grams.

### RESIN CARTRIDGE AND IMPINGERS RECOVERY

| Impinger: | XAD-2 Cartridge* | 1st | 2nd | 3rd | 4th | 5th | 6th |
|---|---|---|---|---|---|---|---|
| Final Wt. | 487.6 | 461.2 | 577.2 | 628.8 | 488.7 | 713.8 | 686.9 |
| Initial Wt. | 500.8 | 463.9 | 580.8 | 626.9 | 489.1 | 684.7 | 668.9 |
| Net Wt. | -13.2 | -2.7 | -3.6 | 1.9 | -0.4 | 29.1 | 18.0 |
| Description and/or color: | white-slight brownish in top layer | clear | clear | clear | clear | 0 | 15 |
| Sample Recovery: | Cartridge* | 1st Impinger | →→→→ Dispose of properly ←←←← | | | | % Blue |

[ Total Condensate Collected: 29.1 grams]

Sample Number: 2 013 2 014
Sample Bottle Tare Wt. 495.9
Transfer impinger contents only (i.e., do not add component rinses to this sample).

Sample Bottle Final Wt. 697.7
Net Sample Wt. 201.8
Components Rinsed**: 1st impinger; combine rinses with train rinses below (sample number XX011)

### FILTER RECOVERY AND TRAIN RINSES

FILTER:
Sample Number: 2 012 Description/Color: black

TRAIN RINSES:
Sample Number: 2 011
Sample Bottle Tare Wt. 492.9
Components Rinsed***: Front -- nozzle, probe liner, coupling and sample transfer line, bypass, ~~cyclone/flask~~, filter holder front;
Back -- filter support, filter holder back, short 90° connector, condenser

Sample Bottle Final Wt. 1245.6
Net Sample Wt. 752.7

* Replace blank-offs and remove aluminum foil, then weigh the cartridge; replace aluminum foil to cover the entire cartridge.
** Methanol/methylene chloride (1:1 v/v) rinses 3 times; add rinses to train rinses (sample number XX011).
*** Methanol/methylene chloride (1:1 v/v) rinses with brushing of front components 3 times or more until perceivably clean, and methanol/methylene chloride (1:1 v/v) rinses of back components 3 times, but without brushing, and including 5-minute soaks of underlined components 3 times.

COMMENTS:

# FIELD SAMPLING DATA FOR METHOD 5 TYPE TRAINS

page 1 of 1

Run No. 2 Date 2-12-99
Project No. 4951-03
Client Culp (USEPA)
Source Furnace#/Outlet
Sampling Location Stack
Train Type/No. SV M0010/Out 2
Operator Griffin
Record data every 12.5 minutes
Nozzle No. Out-3 Type: Quartz
Nozzle Tip Diameter .147 in
Pitot Tube No. M115 $C_p$ ~~.832~~ 0.831

Stack Thermocouple No. 60-3
Probe No. 5-6 Length: 5 ft
Liner Type Glass Heated? (Y) n
Sample Box No. Out 2 18003
Filter No. NA
Umbilical/Impinger Hookup UH-37
Umbilical Nos. N125-3
Meter Box No. N5
Temp. Controller No. N5
Temp. Meter No. N5
DGM Correction (Y) 1.038

Orifice Meter ΔH@ 2.077
Barometer No. X 4029
Barometric Pressure 29.72 in Hg
Elevation to Meter Box 0 ft
Meter Box $P_{bar}$ 29.72 in Hg
Elevation to Sampling Loc. 25 ft
Sampling Location $P_{bar}$ 29.70 in Hg
Static Pressure -.3 in $H_2O$
Assumed Moisture 1.02 %
Assumed $\%CO_2$ 0 $\%O_2$ 21.0

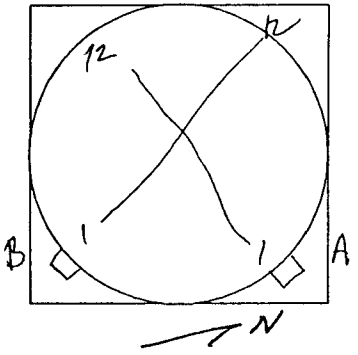

Traverse Point Layout

**Pitot Tube Pressure Measurement System Leak Checks**

| | Initial | Final | Initial | Final | Initial | Final | Initial | Final | Initial | Final |
|---|---|---|---|---|---|---|---|---|---|---|
| Time (24 Hr) | 0941 | 2321 | | | | | | | | |
| Pass or Fail | | pass | | | | | | | | |

**Sampling Train Leak Checks**

| | Initial | Final | Initial | Final | Initial | Final | Initial | Final | Initial | Final |
|---|---|---|---|---|---|---|---|---|---|---|
| Time (24 Hr) | 0945 | 1248 | | 1523 | 1527 | 1808 | | 2320 | | |
| Vacuum, in Hg | .15 | 4" | | 4.5 | 15 | 4.5 | | 4.5 | | |
| Leak Rate, cfm | .005 | .004 | | .005 | .003 | .002 | | .002 | | |
| Final Meter Volume | | 223.217 | | 262.161 | | 296.945 | | | | |
| Initial Meter Volume | | 223.172 | | 261.923 | | 296.867 | | | | |
| Leak Check Volume | | .045 | | .238 | | .078 | | | | |

**Remarks and Notes:**

Meter Volume at Start of Run 187.783
Meter Volume at End of Run 378.027
Total Leak Check Volume .361
Adjusted Final Volume ~~378.666~~ DG 2-12-99
377.666

.238
.045
.078
.361

Run No. 2 Date 2-12-99 Sampling Location Furnace Outlet page 1 of 3

Train Type/No. SV mod10 / out 2 Project No. 4951-03 Operator Griffin

| Traverse Point | Sampling Time, min. | Clock Time (24-Hr) | Dry Gas Meter Reading ($V_m$), $ft^3$ Initial 187.783 Desired | Actual | Velocity Head ($\Delta p$), in. $H_2O$ | Orifice Pressure Differential ($\Delta H$), in. $H_2O$ Desired | Actual | Stack Temp. ($t_s$), °F | Dry Gas Meter Temperature ($t_m$), °F Inlet | Outlet | Pump Vacuum, in. Hg | Silica Gel Impinger Outlet Temp., °F | Probe Liner Outlet Temp., °F | Filter Holder Temp., °F | XAD Cartdg Inlet Temp., °F | Heated Line °F |
|---|---|---|---|---|---|---|---|---|---|---|---|---|---|---|---|---|
| | 0 | 1015 | | | | | | | | | | | | | | |
| A-1 | 12.5 | 1027.5 | 190.69 | 190.75 | 0.43 | 0.21 | 0.17 | 78 | 43 | 42 | 3.5 | 34 | 253 | 254 | 34 | 251 |
| A-1 | 25 | 1040 | 193.47 | 193.50 | 0.40 | 0.19 | 0.15 | 93 | 48 | 45 | 3.5 | 34 | 249 | 255 | 34 | 250 |
| A-2 | 37.5 | 1052.5 | 196.28 | 196.28 | 0.40 | 0.19 | 0.15 | 92 | 51 | 49 | 3.5 | 34 | 247 | 243 | 35 | 249 |
| A-2 | 50 | 1105 | 199.18 | 199.21 | 0.43 | 0.21 | 0.17 | 99 | 54 | 51 | 3.5 | 34 | 251 | 243 | 35 | 250 |
| A-3 | 62.5 | 1117.5 | 201.97 | 202.09 | 0.40 | 0.19 | 0.15 | 111 | 56 | 53 | 3.5 | 35 | 249 | 249 | 35 | 252 |
| A-3 | 75 | 1130 | 204.84 | 205.01 | 0.42 | 0.20 | 0.16 | 105 | 57 | 55 | 4 | 35 | 247 | 247 | 35 | 250 |
| A-4 | 87.5 | 1142.5 | 207.81 | 207.91 | 0.44 | 0.21 | 0.16 | 101 | 59 | 57 | 4 | 35 | 252 | 246 | 35 | 251 |
| A-4 | 100 | 1155 | 210.79 | 210.95 | 0.44 | 0.22 | 0.17 | 95 | 60 | 58 | 4 | 35 | 247 | 245 | 35 | 248 |
| A-5 | 112.5 | 1207.5 | 213.70 | 213.77 | 0.42 | 0.20 | 0.15 | 102 | 60 | 59 | 4 | 36 | 249 | 245 | 36 | 252 |
| A-5 | 125 | 1220 | 216.70 | 216.79 | 0.45 | 0.22 | 0.17 | 105 | 62 | 60 | 4 | 37 | 250 | 248 | 36 | 250 |
| A-6 | 137.5 | 1232.5 | 219.79 | 219.97 | 0.46 | 0.23 | 0.18 | 91 | 64 | 62 | 4 | 37 | 250 | 247 | 37 | 256 |
| A-6 | 150 | 1245 | 222.94 | 223.172 | 0.47 | 0.24 | 0.19 | 82 | 65 | 63 | 4 | 37 | 247 | 247 | 38 | 252 |
| Initial | | 1250 | | 223.217 | | | | | | | | | | | | |
| A-7 | 162.5 | 1302.5 | 226.36 | 226.42 | 0.47 | 0.24 | 0.19 | 86 | 65 | 64 | 4 | 36 | 247 | 246 | 36 | 249 |
| A-7 | 175 | 1315 | 229.53 | 229.61 | 0.48 | 0.24 | 0.19 | 89 | 65 | 64 | 4 | 35 | 247 | 246 | 34 | 256 |
| A-8 | 187.5 | 1327.5 | 232.69 | 232.72 | 0.48 | 0.24 | 0.19 | 95 | 66 | 65 | 4 | 36 | 248 | 249 | 34 | 256 |
| A-8 | 200 | 1340 | 235.80 | 235.82 | 0.47 | 0.23 | 0.18 | 105 | 68 | 66 | 4 | 38 | 245 | 245 | 37 | 255 |
| A-9 | 212.5 | 1352.5 | 238.60 | 238.76 | 0.38 | 0.19 | 0.15 | 102 | 67 | 67 | 4 | 38 | 248 | 247 | 41 | 255 |
| A-9 | 225 | 1405 | 241.44 | 241.65 | 0.40 | 0.19 | 0.15 | 113 | 67 | 67 | 4 | 37 | 247 | 248 | 38 | 254 |
| A-10 | 237.5 | 1417.5 | 244.86 | 245.12 | 0.57 | 0.28 | 0.23 | 108 | 68 | 67 | 4.5 | 37 | 251 | 248 | 38 | 256 |
| A-10 | 250 | 1430 | 248.49 | 248.92 | 0.63 | 0.32 | 0.27 | 98 | 68 | 68 | 4.5 | 38 | 254 | 245 | 37 | 255 |
| A-11 | 262.5 | 1442.5 | 251.96 | 252.41 | 0.59 | 0.29 | 0.23 | 110 | 69 | 68 | 4.5 | 36 | 246 | 247 | 37 | 253 |
| A-11 | 275 | 1455 | 255.09 | 255.40 | 0.49 | 0.23 | 0.18 | 123 | 69 | 68 | 4 | 37 | 249 | 246 | 37 | 255 |
| A-12 | 287.5 | 1507.5 | 258.32 | 258.69 | 0.52 | 0.25 | 0.20 | 123 | 69 | 68 | 4 | 38 | 250 | 248 | 38 | 256 |
| A-12 | 300 | 1520 | 261.66 | 261.923 | 0.55 | 0.27 | 0.22 | 114 | 68 | 67 | 4.5 | 37 | 247 | 246 | 37 | 255 |

continued on next page

Remarks and Notes:

Run No. 2 Date 2-12-99 Sampling Location Furnace Outlet page 2 of 3

Train Type/No. SV M0010 / out 2 Project No. 4951-03 Operator Griffin

| Traverse Point | Sampling Time, min. | Clock Time (24-Hr) | Dry Gas Meter Reading ($V_m$), $ft^3$ Initial 262.161 Desired | Actual | Velocity Head ($\Delta p$), in. $H_2O$ | Orifice Pressure Differential ($\Delta H$), in. $H_2O$ Desired | Actual | Stack Temp. ($t_s$), °F | Dry Gas Meter Temperature ($t_m$), °F Inlet | Outlet | Pump Vacuum, in. Hg | Silica Gel Impinger Outlet Temp., °F | Probe Liner Outlet Temp., °F | Filter Holder Temp., °F | XAD Cartdg Inlet Temp., °F | Heated Line °F |
|---|---|---|---|---|---|---|---|---|---|---|---|---|---|---|---|---|
| | 300 | 1535 | | | | | | | | | | | | | | |
| B-1 | 312.5 | 1547.5 | 264.68 | 264.68 | 0.30 | 0.15 | 0.10 | 90 | 67 | 67 | 4 | 42 | 244 | 245 | 39 | 254 |
| B-1 | 325 | 1600 | 266.97 | 266.78 | 0.25 | 0.12 | 0.08 | 92 | 67 | 67 | 3.5 | 36 | 248 | 246 | 38 | 255 |
| B-2 | 337.5 | 1612.5 | 269.66 | 269.42 | 0.35 | 0.17 | 0.12 | 101 | 67 | 66 | 4 | 36 | 247 | 246 | 37 | 254 |
| B-2 | 350 | 1625 | 272.28 | 271.88 | 0.34 | 0.16 | 0.11 | 113 | 66 | 66 | 4 | 36 | 249 | 246 | 37 | 254 |
| B-3 | 362.5 | 1637.5 | 275.12 | 274.91 | 0.38 | 0.19 | 0.16 | 83 | 65 | 66 | 4 | 37 | 250 | 250 | 37 | 254 |
| B-3 | 375 | 1650 | 277.70 | 277.46 | 0.33 | 0.16 | 0.12 | 111 | 66 | 66 | 4 | 37 | 248 | 246 | 37 | 255 |
| B-4 | 387.5 | 1702.5 | 280.73 | 280.65 | 0.45 | 0.22 | 0.18 | 108 | 66 | 65 | 4.5 | 37 | 248 | 246 | 37 | 255 |
| B-4 | 400 | 1715 | 284.02 | 284.01 | 0.52 | 0.26 | 0.21 | 91 | 66 | 65 | 4.5 | 36 | 250 | 246 | 35 | 254 |
| B-5 | 412.5 | 1727.5 | 287.25 | 287.28 | 0.50 | 0.25 | 0.20 | 95 | 66 | 65 | 4.5 | 35 | 248 | 246 | 35 | 256 |
| B-5 | 425 | 1740 | 290.40 | 290.51 | 0.49 | 0.24 | 0.19 | 108 | 66 | 65 | 4.5 | 36 | 250 | 246 | 35 | 251 |
| B-6 | 437.5 | 1752.5 | 293.65 | 293.72 | 0.51 | 0.25 | 0.20 | 98 | 66 | 65 | 4.5 | 35 | 249 | 247 | 35 | 256 |
| B-6 | 450 | 1805 | 296.79 | 296.867 | 0.48 | 0.24 | 0.19 | 101 | 66 | 65 | 4.5 | 35 | 248 | 246 | 34 | 258 |
| Initial | ~~462.5~~ | 1815 | | 296.845 | ~~0.48~~ DG | | | ~~96~~ DG | ~~62~~ DG | ~~63~~ DG | | | | | | ~~258~~ DG |
| B-7 | 462.5 | 1827.5 | 300.08 | 300.12 | 0.48 | 0.24 | 0.19 | 96 | 62 | 63 | 4.5 | 37 | 247 | 242 | 34 | 258 |
| B-7 | 475 | 1840 | 303.33 | 303.41 | 0.50 | 0.26 | 0.21 | 77 | 61 | 61 | 4.5 | 34 | 246 | 245 | 34 | 256 |
| B-8 | 487.5 | 1852.5 | 306.66 | 306.76 | 0.51 | 0.27 | 0.22 | 63 | 61 | 61 | 4.5 | 34 | 247 | 249 | 33 | 256 |
| B-8 | 500 | 1905 | 310.02 | 310.15 | 0.52 | 0.28 | 0.23 | 60 | 61 | 60 | 4.5 | 34 | 249 | 244 | 33 | 259 |
| B-9 | 512.5 | 1917.5 | 313.43 | 313.58 | 0.53 | 0.28 | 0.23 | 56 | 60 | 60 | 4.5 | 34 | 248 | 249 | 33 | 257 |
| B-9 | 525 | 1930 | 316.86 | 317.03 | 0.54 | 0.29 | 0.24 | 57 | 61 | 59 | 4.5 | 35 | 248 | 246 | 34 | 257 |
| B-10 | 537.5 | 1942.5 | 320.33 | 320.50 | 0.55 | 0.29 | 0.24 | 58 | 61 | 59 | 4.5 | 34 | 246 | 246 | 33 | 257 |
| B-10 | 550 | 1955 | 323.82 | 324.00 | 0.56 | 0.30 | 0.25 | 58 | 60 | 59 | 4.5 | 34 | 246 | 246 | 34 | 255 |
| B-11 | 562.5 | 2007.5 | 327.30 | 327.52 | 0.56 | 0.30 | 0.25 | 60 | 61 | 59 | 4.5 | 35 | 249 | 248 | 34 | 255 |
| B-11 | 575 | 2020 | 330.79 | 331.03 | 0.56 | 0.30 | 0.25 | 59 | 61 | 59 | 4.5 | 35 | 251 | 246 | 34 | 256 |
| B-12 | 587.5 | 2032.5 | 334.29 | 334.51 | 0.56 | 0.30 | 0.24 | 58 | 61 | 59 | 4.5 | 35 | 248 | 251 | 34 | 256 |
| B-12 | 600 | 2045 | 337.76 | 337.81 | 0.55 | 0.29 | 0.23 | 57 | 61 | 59 | 4.5 | 35 | 248 | 246 | 34 | 255 |

Continued on next page

Remarks and Notes:

Run No. 2 Date 2-12-99 Sampling Location Furnace Outlet page 3 of 3

Train Type/No. 5V M0010 / OnT2 Project No. 4951-03 Operator Griffin

| Traverse Point | Sampling Time, min. | Clock Time (24-Hr) | Dry Gas Meter Reading ($V_m$), $ft^3$ Initial 337.81 | | Velocity Head ($\Delta p$), in. $H_2O$ | Orifice Pressure Differential ($\Delta H$), in. $H_2O$ | | Stack Temp. ($t_s$), °F | Dry Gas Meter Temperature ($t_m$), °F | | Pump Vacuum, in. Hg | Silica Gel Impinger Outlet Temp., °F | Probe Liner Outlet Temp., °F | Filter Holder Temp., °F | XAD Cartdg Inlet Temp., °F | Heated Line °F |
|---|---|---|---|---|---|---|---|---|---|---|---|---|---|---|---|---|
| | 600 | 2045 | Desired | Actual | | Desired | Actual | | Inlet | Outlet | | | | | | |
| B7 | 612.5 | 2057.5 | 341.13 | 341.24 | 0.52 | 0.28 | 0.23 | 57 | 61 | 59 | 4.5 | 35 | 247 | 247 | 34 | 254 |
| B7 | 625 | 2110 | 344.50 | 344.61 | 0.52 | 0.28 | 0.23 | 55 | 61 | 59 | 4.5 | 35 | 250 | 246 | 34 | 256 |
| B7 | 637.5 | 2122.5 | 347.90 | 348.13 | 0.53 | 0.28 | 0.23 | 55 | 59 | 57 | 4.5 | 35 | 248 | 248 | 34 | 256 |
| B7 | 650 | 2135 | 351.29 | 351.47 | 0.53 | 0.28 | 0.23 | 55 | 57 | 56 | 4.5 | 35 | 245 | 246 | 34 | 255 |
| B7 | 662.5 | 2147.5 | 354.63 | 354.71 | 0.52 | 0.28 | 0.22 | 55 | 56 | 55 | 4.5 | 35 | 247 | 248 | 34 | 256 |
| B7 | 675 | 2200 | 357.97 | 357.97 | 0.52 | 0.28 | 0.22 | 56 | 55 | 54 | 4.5 | 35 | 245 | 245 | 34 | 255 |
| B7 | 687.5 | 2212.5 | 361.34 | 361.33 | 0.53 | 0.28 | 0.23 | 56 | 55 | 54 | 4.5 | 35 | 247 | 248 | 34 | 256 |
| B7 | 700 | 2225 | 364.71 | 364.66 | 0.53 | 0.28 | 0.23 | 56 | 55 | 54 | 4.5 | 35 | 248 | 247 | 34 | 257 |
| B7 | 712.5 | 2237.5 | 368.04 | 368.05 | 0.52 | 0.27 | 0.22 | 59 | 55 | 53 | 4.5 | 36 | 251 | 246 | 35 | 252 |
| B7 | 725 | 2250 | 371.36 | 371.38 | 0.52 | 0.27 | 0.22 | 59 | 55 | 53 | 4.5 | 37 | 252 | 247 | 35 | 255 |
| B7 | 737.5 | 2302.5 | 374.69 | 374.71 | 0.52 | 0.27 | 0.22 | 58 | 54 | 52 | 4.5 | 36 | 250 | 246 | 35 | 252 |
| B7 | 750 | 2315 | 378.01 | 378.027 | 0.52 | 0.27 | 0.22 | 59 | 55 | 52 | 4.5 | 36 | 248 | 247 | 35 | 256 |

**Remarks and Notes:** Both A & B traverses complete; single point sampling for duration of smelting process.

# 40 *CFR* 60, APPENDIX A, METHOD 3B
# INTEGRATED GAS SAMPLING DATA

Run No. 2 Date 2-12-99 Client Source Culp (USEPA) Furnace Outlet
Project No. 4951-03 Sampling Location Stack
Sample Type (Multi-Point, Single-Point) Operator Griffin
Flow Control Device (Valve, Critical Orifice) Bag Type Mylar Sample No. 2020
Method 5 Meter Box No. N5 Method 3B Train No. NA
M3B Pump Type Diaphram M3B Flow Meter Type Rotameter
M3B Pump No. N5 M3B Flow Meter No. N-5
Desired Sampling Rate 50 cc/min
Leak Check Before Sampling 0 After Sampling 0
Total Sampling Time 584 min Average Flow Meter Reading 0.5
Flow Rate, cc/min: Average 50 Highest 50 Lowest 50
Estimated Total Sample Volume 29 liters

| Time (24-Hr) | Flow Meter Reading | Start Purge | Start Sampling | Stop Sampling | Sampling | Remarks and Notes |
|---|---|---|---|---|---|---|
| 1010 | 0.5 | ✓ | | | | |
| 1015 | 0.5 | | ✓ | | ✓ | No Problems |
| 1115 | 0.5 | | | | ✓ | |
| 1215 | 0.5 | | | | ✓ | |
| 1245 | 0.5 | | | ✓ | | Mid traverse leak check (M5 Train) |
| 1250 | 0.5 | ✓ | | | | |
| 1255 | 0.5 | | ✓ | | ✓ | |
| 1355 | 0.5 | | | | ✓ | |
| 1455 | 0.5 | | | | ✓ | |
| 1517 | 0.5 | | | ✓ | | Port Change |
| 1535 | 0.5 | ✓ | | | | |
| 1540 | 0.5 | | ✓ | | ✓ | |
| 1640 | 0.5 | | | | ✓ | |
| 1740 | 0.5 | | | | ✓ | |
| 1802 | 0.5 | | | ✓ | | Mid traverse leak Check (M5 train) |
| 1819 | 0.5 | ✓ | | | | |
| 1823 | 0.5 | | ✓ | | ✓ | |
| 1923 | 0.5 | | | | ✓ | |
| 2023 | 0.5 | | | | ✓ | |
| 2053 | 0.5 | | | ✓ | | |
| | | | | | | |
| | | | | | | |
| | | | | | | |
| | | | | | | |
| | | | | | | |
| | | | | | | |

## 40 *CFR* 60, APPENDIX A, METHOD 3B, GAS ANALYSIS BY ORSAT

Run No. 2 Date 02/12/99

Project No. 4951.03.04.01 Sample No. 2020

Sampling Location Reinburstory Furnace A1 Baghouse Outlet Stack

Analysis Start Time 2140

Sample Type (Bag, Grab) Grab

Analyst J. Surman

Orsat Leak Check Before Analysis:

Burrete No Change in 4 Minutes

Pipettes No Change in 4 Minutes

Orsat Leak Check After Analysis:

Burrete No Change in 4 Minutes

Pipettes No Change in 4 Minutes

| Analysis | 1 | | 2 | | 3 | | Average Net Value (% v/v) |
|---|---|---|---|---|---|---|---|
| Gas | Actual Reading | Net Value | Actual Reading | Net Value | Actual Reading | Net Value | |
| $CO_2$ | 1 0.2<br>2 0.2<br>3 | 0.2 | 1 0.2<br>2 0.2<br>3 | 0.2 | 1 0.2<br>2 0.2<br>3 | 0.2 | 0.2 |
| $O_2$ (Net is actual reading minus actual $CO_2$ reading) | 1 21.1<br>2 21.1<br>3 | 20.9 | 1 21.1<br>2 21.1<br>3 | 20.9 | 1 21.1<br>2 21.1<br>3 | 20.9 | 20.9 |
| CO (Net is actual reading minus actual $O_2$ reading) | 1<br>2<br>3 | | 1<br>2<br>3 | | 1<br>2<br>3 | | |

Acceptance Criteria per Method 3B

$CO_2$ >4% 0.3% v/v $O_2$ ≥15% 0.2% v/v CO 0.3% v/v

≤4% 0.2% v/v <15% 0.3% v/v

Remarks and Notes:

4951.03 Culp A1 2020
M0010 ORSAT BAG
FURNACE BH OUTLET SAMPLE
For disposal call: J.SURMAN
MIDWEST RESEARCH INSTITUTE

SW-846, METHOD 0010 - MODIFIED SEMIVOLATILE ORGANICS TRAIN (M0010)
FOR POM AND PAHs
FIELD LABORATORY TRAIN SET-UP DATA

MRI Project No. 4951.03.04.01
Client/Source: U.S. EPA OAQPS EMAD SCG / Side-well Reverberatory Furnace #1
Source Location: Steele, Alabama
Sampling Location: Reverberatory Furnace Baghouse Outlet Stack

Run No. 2 Sampling Train No. OUT-2 Sample Box No. 12003
Set-up person(s): J. Surman Date: 02/12/99
Transfer to Sampler:
Relinquished By J. Surman Received By D. Albury Date/Time 02/12/99 0840

| TRAIN COMPONENT | COMPONENT NO. | LOADING DATA | | |
|---|---|---|---|---|
| Sampling Nozzle (Quartz) | OUT-3 * | | Initial Weights (grams)** | |
| Probe (Liner-Glass) | * | | Empty | Loaded |
| Female Probe Outlet Blank-Off | | | | |
| 90° Bypass | | ← Heated coupling + Teflon STL | | |
| Filter Holder Front | | | | |
| Filter Holder Back with Teflon®-coated 316 SS Filter Support | | Filter Type: Whatman QM-A | | |
| Short 90° Connector | | | | |
| Condenser (Standard) | | Thermocouple No. 91-11 | | *** |
| XAD-2 Resin Cartridge (Standard) | | ~65 grams XAD-2 Resin + Surrogates | 491.0 | |

*(Documentation of standards injection is separate)*; resin spiked on 02-04-99 and maintained near 4°C until use.

| | | | | |
|---|---|---|---|---|
| 1st Impinger (Mod-GBS) | | Empty | 472.2 | |
| U-Connector (A) | | | | |
| 2nd Impinger (Mod-GBS) | | 100 mLs | 494.3 | 600.0 |
| U-Connector (B) | | ASTM Type II Water | | |
| 3rd Impinger (GBS) | | 100 mLs | 473.3 | 576.6 |
| U-Connector (C) | | ASTM Type II Water | | |
| 4th Impinger (Mod-GBS) | | Empty | 487.4 | |
| U-Connector (D) | | | | |
| 5th Impinger (Mod-GBS) | | ~200 g indicating silica gel | | 668.7 |
| U-Connector (E) | | | | |
| 6th Impinger (Mod-GBS) | | ~200 g indicating silica gel | | 701.5 |
| Impinger Outlet Connector | UH-37 | | | |

* Before and after sampling: Nozzle openings covered with methanol/methylene chloride-rinsed aluminum foil, and nozzle placed in Ziploc® bag. Probe liner outlet sealed with glass female blank-off, and inlet sealed with Teflon® plug. Bypass inlet covered (not sealed) with methanol/methylene chloride-rinsed aluminum foil.

** Initial weights of additional components exchanged during the run also entered here. All exchange component openings covered with methanol/methylene chloride-rinsed aluminum foil or as described above.

*** Cartridge weighed with blank-offs in place; then, cartridge covered with aluminum foil to seal out light during storage and sampling.

Component Changes after Set-up and before Recovery and Other Comments:

SW-846, METHOD 0010 - MODIFIED SEMIVOLATILE ORGANICS TRAIN (M0010)
FOR POM AND PAHs
FIELD LABORATORY SAMPLE RECOVERY DATA

MRI Project No. 4951.03.04.01
Client/Source: U.S. EPA OAQPS EMAD SCG / Side-well Reverberatory Furnace #1
Source Location: Steele, Alabama
Sampling Location: Reverberatory Furnace Baghouse Outlet Stack

Run No. 2 Sampling Train No. OUT-2 Sample Box No. 12003
Transfer for Recovery:
Relinquished By D.Albury Received By J. Surman Date/Time 02/12/99 ~~2330~~ 2330
Sample box recovery person(s): J. Surman Date: 02/12/99
Probe recovery person(s): D. Neal, D. Albury, D. Griffin, A. Page Date: 02/12/99
Weights below are in grams.

RESIN CARTRIDGE AND IMPINGERS RECOVERY

| Impinger: | XAD-2 Cartridge* | 1st | 2nd | 3rd | 4th | 5th | 6th |
|---|---|---|---|---|---|---|---|
| Final Wt. | 474.4 | 474.7 | 600.4 | 583.7 | 488.6 | 697.7 | 714.8 |
| Initial Wt. | 491.0 | 472.2 | 600.0 | 576.6 | 487.4 | 668.7 | 701.5 |
| Net Wt. | -16.6 | 2.5 | 0.4 | 7.1 | 1.2 | 29.0 | 13.3 |

[ Total Condensate Collected: 36.9 grams]

| | | | | | | | |
|---|---|---|---|---|---|---|---|
| Description and/or color: | white | clear | clear | clear | clear | 0 | 45 |
| Sample Recovery: | Cartridge* | 1st Impinger | →→→→ Dispose of properly ←←←← | | | % Blue | |

Sample Number: 2 018 2 019
Sample Bottle Tare Wt. 491.3
Transfer impinger contents only (i.e., do not add component rinses to this sample).

Sample Bottle Final Wt. 706.4
Net Sample Wt. 215.1
Components Rinsed**: 1st impinger; combine rinses with train rinses below (sample number XX016)

FILTER RECOVERY AND TRAIN RINSES

FILTER:
Sample Number: 2 017 Description/Color: black

TRAIN RINSES:
Sample Number: 2 016
Sample Bottle Tare Wt. 493.2 coupling and sample transfer line
Components Rinsed***: Front -- nozzle, probe liner, bypass, filter holder front;
Back -- filter support, filter holder back, short 90° connector, condenser

Sample Bottle Final Wt. 1303.9
Net Sample Wt. 810.7

* Replace blank-offs and remove aluminum foil, then weigh the cartridge; replace aluminum foil to cover the entire cartridge.
** Methanol/methylene chloride (1:1 v/v) rinses 3 times; add rinses to train rinses (sample number XX016).
*** Methanol/methylene chloride (1:1 v/v) rinses with brushing of front components 3 times or more until perceivably clean, and methanol/methylene chloride (1:1 v/v) rinses of back components 3 times, but without brushing, and including 5-minute soaks of underlined components 3 times.

COMMENTS:

SW-846, METHOD 0010 - MODIFIED SEMIVOLATILE ORGANICS TRAIN (M0010)
FOR POM AND PAHs
FIELD LABORATORY TRAIN SET-UP DATA
**FIELD BLANK TRAIN**

MRI Project No. 4951.03.04.01
Client/Source: U.S. EPA OAQPS EMAD SCG / Chip Dryer and Side-well Reverberatory Furnace #1
Source Location: Steele, Alabama
Sampling Location: Roof of Chip Dryer Baghouse near Outlet Stack

Run No. 1 Sampling Train No. OUT-3 Sample Box No. 10288
Set-up person(s): J. Surman Date: 02-09-99
Transfer to Sampler:
Relinquished By J. Surman Received By D. Alburty Date/Time 02-09-99 0815

| TRAIN COMPONENT | COMPONENT NO. | LOADING DATA | | |
|---|---|---|---|---|
| | | | Initial Weights (grams)** | |
| | | | Empty | Loaded |
| Sampling Nozzle (Quartz) | No ID * | | | |
| Probe (Liner-Glass) | * | | | |
| Female Probe Outlet Blank-Off | | | | |
| Heated Coupling & Teflon® STL | * | | | |
| 90° Bypass | * | | | |
| Filter Holder Front | | | | |
| Filter Holder Back with Teflon®-coated 316 SS Filter Support | | Filter Type: Whatman QM-A | | |
| Short 90° Connector | | | | |
| Condenser (Standard) | | Thermocouple No. NA | | *** |
| XAD-2 Resin Cartridge (Standard) | | ~65 grams XAD-2 Resin + Surrogates | 492.7 | |

*(Documentation of standards injection is separate)*; resin spiked on 02-04-99 and maintained near 4°C until use.

| | | | | |
|---|---|---|---|---|
| 1st Impinger (Mod-GBS) | | Empty | 479.6 | |
| U-Connector (A) | | | | |
| 2nd Impinger (Mod-GBS) | | 100 mLs | 512.8 | 613.7 |
| U-Connector (B) | | ASTM Type II Water | | |
| 3rd Impinger (GBS) | | 100 mLs | 473.9 | 574.9 |
| U-Connector (C) | | ASTM Type II Water | | |
| 4th Impinger (Mod-GBS) | | Empty | 480.2 | |
| U-Connector (D) | | | | |
| 5th Impinger (Mod-GBS) | | ~200 g indicating silica gel | | 679.1 |
| U-Connector (E) | | | | |
| 6th Impinger (Mod-GBS) | | ~200 g indicating silica gel | | 674.3 |
| Impinger Outlet Connector | UH-2 | | | |

* Before and after use: Nozzle openings covered with methanol/methylene chloride-rinsed aluminum foil, and nozzle placed in Ziploc® bag. Probe liner outlet sealed with glass female blank-off, and inlet sealed with Teflon® plug. Bypass inlet covered (not sealed) with methanol/methylene chloride-rinsed aluminum foil. Sample transfer line (STL) openings joined with glass/Teflon® coupling used at filter holder outlet during use.

** Initial weights of additional components exchanged during the run also entered here. All exchange component openings covered with methanol/methylene chloride-rinsed aluminum foil or as described above.

*** Cartridge weighed with blank-offs in place; then, cartridge covered with aluminum foil to seal out light during storage and use.

Component Changes after Set-up and before Recovery and Other Comments:

SW-846, METHOD 0010 - MODIFIED SEMIVOLATILE ORGANICS TRAIN (M0010)
FOR POM AND PAHs
FIELD LABORATORY SAMPLE RECOVERY DATA
**FIELD BLANK TRAIN**

MRI Project No. 4951.03.04.01
Client/Source: U.S. EPA OAQPS EMAD SCG / Chip Dryer and Reverberatory Furnace #1
Source Location: Steele, Alabama
Sampling Location: Roof of Chip Dryer Baghouse near Outlet Stack

Run No. 1 Sampling Train No. OUT-3 Sample Box No. 10288
Transfer for Recovery:
Relinquished By D. Albusty Received By J. Surman Date/Time 02/09/99 2000
Sample box recovery person(s): J. Surman Date: 02/09/99
Probe/STL recovery person(s): D. Nez, D. Albusty, D. Griffin, A. Rego Date: 02/09/99
Weights below are in grams.

RESIN CARTRIDGE AND IMPINGERS RECOVERY

| Impinger: | XAD-2 Cartridge* | 1st | 2nd | 3rd | 4th | 5th | 6th |
|---|---|---|---|---|---|---|---|
| Final Wt. | 494.3 | 480.1 | 613.7 | 575.0 | 480.3 | 679.1 | 674.2 |
| Initial Wt. | 492.7 | 479.2 | 613.7 | 574.9 | 480.2 | 679.1 | 674.3 |
| Net Wt. | 1.6 | 0.9 | 0 | 0.1 | 0.1 | 0 | -0.1 |

[ Overall Weight Difference: 2.6 grams]

| Description and/or color: | white | clear | clear | clear | clear | 100 | 100 |
|---|---|---|---|---|---|---|---|
| Sample Recovery: | Cartridge* | 1st Impinger | →→→→ Dispose of properly ←←←← | | | % Blue | |

Sample Number: 1028

Components Rinsed**: 1st impinger; combine rinses with train back rinses below (sample number XX026)

FILTER RECOVERY AND TRAIN RINSES

FILTER:
Sample Number: 1027 Description/Color: white

TRAIN RINSES: FRONT
Sample Number: 1026
Sample Bottle Tare Wt. 496.3
Components Rinsed***: Front -- nozzle, probe liner, coupling and sample transfer line, bypass, filter holder front; Back -- filter support, filter holder back, short 90° connector, condenser

Sample Bottle Final Wt. 1235.2
Net Sample Wt. 738.9

* Replace blank-offs and remove aluminum foil, then weigh the cartridge; replace aluminum foil to cover the entire cartridge.
** Methanol/methylene chloride (1:1 v/v) rinses 3 times; add rinses to train rinses (sample number XX026).
*** Methanol/methylene chloride (1:1 v/v) rinses with brushing of front components 3 times or more in the same manner as is being done for the source sampling trains, and methanol/methylene chloride (1:1 v/v) rinses of back components 3 times, but without brushing, and including 5-minute soaks of underlined components 3 times.

COMMENTS:

SW-846, METHOD 0010 - MODIFIED SEMIVOLATILE ORGANICS TRAIN (M0010)
FOR POM AND PAHs
FIELD REAGENT BLANK PREPARATION DATA

MRI Project No. 4951.03.04.01
Client/Source: U.S. EPA OAQPS EMAD SCG / Chip Dryer and Reverberatory Furnace #1
Source Location: Steele, Alabama
Sampling Location(s): All locations

Blank(s) Prepared By: J. Surman Date: 02/11/99

Weights below are in grams.

| Reagent Blank Description | Sample Number | Bottle Tare Weight | Bottle Gross Weight | Net Sample Weight |
|---|---|---|---|---|
| Methanol to be archived<br>Volume needed: 400 mLs<br>Lot Number: B0336 | / 021 | 496.9 | 891.3 | 394.4 |
| Methylene chloride to be archived<br>Volume needed: 400 mLs<br>Lot Number: BN063 | / 022 | 497.2 | 1193.9 | 696.7 |
| Filter to be archived<br>Type: Whatman QM-A<br>Lot Number: 45366 | / 023 | | | |
| XAD Cartridge to be archived<br>Cartridge Number: NA | / 024 | | | |
| ASTM Type II Water to be archived<br>Volume needed: 200 mLs<br>Lot Number: 142 2/5/99 | / 025 | 495.8 | 956.7 | 460.9 |
| | | | | |
| | | | | |
| | | | | |

NOTE: Lots may be identified above by a manufacturer's lot number or by the date of reagent preparation. If different lots of a particular reagent are used, indicate the applicable test and/or run number(s) and sampling location(s) where the train(s) loaded and/or recovered with that reagent are used (i.e., list each reagent blank sample number with the applicable test and/or run number(s) and sampling location(s) below).

| Sample Number | For Test and/or Run Number(s) | For Sampling Location(s) |
|---|---|---|
| | | |
| | | |
| | | |
| | | |

COMMENTS:

# VELOCITY TRAVERSE DATA

Project No. 4951-03
Run No. Pre 1 Date 2-8-99
Plant Culp
Sampling Location Chip dryer INLET
Operator(s) Griffin - Page
Barometric Pressure, in. Hg 29.40
Site to Barometer Elevation 0 ft.
Corrected Barometric Pressure 29.40
Pitot No. M 103 Pitot Cp .805
T/C No. 36-10 Temp. Meter No. N5
Stack Area, sq.ft. 1.706 ft
Static Pressure, in. $H_2O$ ~~6.9~~ -6.0
Assumed Moisture, % 6.9
Assumed $\%CO_2$ 0.5 Assumed $\%O_2$ 20.0
Initial Pitot Leak Check 1416
Final Pitot Leak Check 1506
Comments: Total Pressure @ A3 = -4.35 ΔP = 1.8
Total Press @ B4 -5.0 ΔP = 2.5

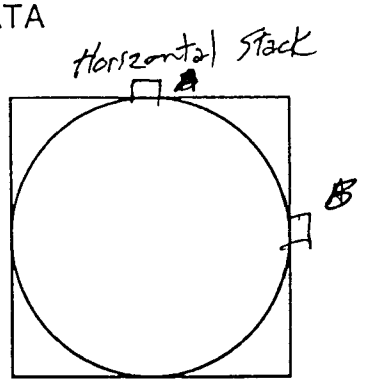


Traverse Point Layout

Start Time 1420 End Time 1500

| | TRAVERSE POINT NUMBER | VELOCITY HEAD, Δp in. $H_2O$ | STACK TEMP. °F | ROTATION ANGLE α | |
|---|---|---|---|---|---|
| B | B-1 | 1.6 | 154 | +2 | |
| | B-2 | 1.7 | 150 | -22 | |
| | B-3 | 1.8 | 177 | -12 | |
| | B-4 | 2.7 | 185 | +8 | |
| | B-5 | 2.7 | 188 | +16 | |
| | B-6 | 2.7 | 187 | +22 | |
| | | | | | |
| A | A-1 | 0.82 | 157 | -5 | |
| | A-2 | 2.1 | 179 | -2 | |
| | A-3 | 2.3 | 181 | -5 | |
| | A-4 | 2.5 | 182 | +4 | |
| | A-5 | 2.5 | 182 | +10 | |
| | A-6 | 2.3 | 183 | +12 | |
| | | | | | |
| | Avg | 2.10 | 175 | 10° | |

| TRAVERSE POINT NUMBER | VELOCITY HEAD, Δp in. $H_2O$ | STACK TEMP. °F | ROTATION ANGLE α | |
|---|---|---|---|---|
| | | | | |

93-3 SEV sur frm 020393

# VELOCITY TRAVERSE DATA

Project No. 4951-03
Run No. Pre 1 Date 2-8-99
Plant Culp
Sampling Location Chip Dryer Outlet
Operator(s) Griffin / Neal
Barometric Pressure, in. Hg 29.40
Site to Barometer Elevation 0 ft.
Corrected Barometric Pressure 29.40
Probe 3-2 { Pitot No. M-126 Pitot Cp .816
T/C No. 36-13 Temp. Meter No. N6
Stack Area, sq.ft. 3.012
Static Pressure, in. $H_2O$ ~~3.1~~ -0.70
Assumed Moisture, % 3.2
Assumed $\%CO_2$ 0.5 Assumed $\%O_2$ 19.5
Initial Pitot Leak Check 1525
Final Pitot Leak Check 1618
Comments: Total Pressure @ B 7 = 0.31 ΔP = .38
Total Pressure @ A 8 = 0.37 ΔP = .71

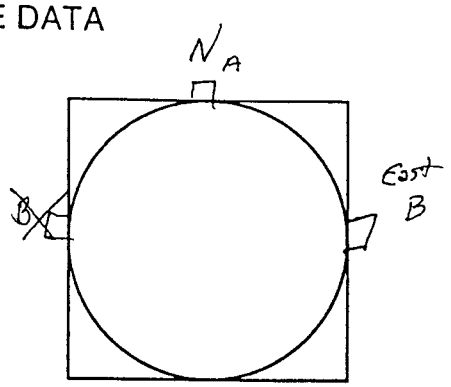


Traverse Point Layout

Start Time 1530 End Time 1615

| TRAVERSE POINT NUMBER | VELOCITY HEAD, Δp in. $H_2O$ | STACK TEMP. °F | ROTATION ANGLE α | |
|---|---|---|---|---|
| A-1 | .10 | 165 | -45 | |
| 2 | .11 | 173 | -40 | |
| 3 | .09 | 176 | -25 | |
| 4 | .06 | 178 | +5 | |
| 5 | .05 | 179 | +15 | |
| 6 | .07 | 178 | +20 | |
| 7 | .24 | 179 | +10 | |
| 8 | .71 | 181 | +7 | |
| 9 | 1.2 | 181 | 0 | |
| 10 | 1.7 | 182 | -7 | |
| 11 | 1.7 | 182 | -9 | |
| 12 | 1.5 | 179 | -6 | |
| | | | | |
| B-1 | .53 | 168 | 0 | |
| 2 | .60 | 179 | ~~-35~~ -30 | |
| 3 | .41 | 179 | -20 | |
| 4 | .19 | 179 | -15 | |
| 5 | .09 | 179 | 0 | |
| 6 | .08 | 179 | +20 | |
| 7 | .38 | 179 | +15 | |
| 8 | .73 | 179 | +10 | |
| 9 | 1.1 | 179 | +9 | |
| 10 | 1.5 | 179 | +6 | |
| 11 | 1.6 | 178 | +6 | |
| 12 | 1.6 | 178 | +5 | |
| Avg | 0.52 | 178 | 14 | |

| TRAVERSE POINT NUMBER | VELOCITY HEAD, Δp in. $H_2O$ | STACK TEMP. °F | ROTATION ANGLE α | |
|---|---|---|---|---|
| | | | | |

93-3 SEV sur frm 020393

# Appendix C

# Sample Collection Calibration Data

# METHOD 5 METERING CONSOLE CALIBRATION WITH CRITICAL ORIFICE

| | | | |
|---|---|---|---|
| MRI Project No. | 4951-03-04-01 | Metering Console No. | **N1** |
| Date: | 3-16-99 | Previous Dry Gas Meter Factor (Y): | 1.019 |
| Operator: | Daniel Neal | Calibrated Critical Orifice No. | D19 |
| | | Critical Orifice Coefficient in English Units (K'): | 0.51210 |
| | | Ambient Temperature Meter No. | Y-0815 |

| | Run 1 | Run 2 | Run 3 |
|---|---|---|---|
| CALIBRATION GAS VOLUME DATA | | | |
| Initial Dry Gas Meter Gas Volume, ft.³ | 523.000 | 529.669 | 536.361 |
| Final Dry Gas Meter Gas Volume, ft.³ | 529.669 | 536.361 | 543.038 |
| Net Dry Gas Meter Gas Volume (Vm), ft.³ | 6.669 | 6.692 | 6.677 |
| CALIBRATION CONDITIONS DATA | | | |
| Dry Gas Meter Temperature, °F: | | | |
| Initial Inlet Temperature, °F | 81.0 | 81.0 | 81.0 |
| Final Inlet Temperature, °F | 81.0 | 81.0 | 82.0 |
| Initial Outlet Temperature, °F | 78.0 | 78.0 | 78.0 |
| Final Outlet Temperature, °F | 78.0 | 78.0 | 78.0 |
| Average Dry Gas Meter Temperature (tm), °F | 79.5 | 79.5 | 79.8 |
| Time, seconds | 600 | 600 | 600 |
| Orifice Meter Delta-H, inches w.c. | 1.500 | 1.500 | 1.500 |
| Barometric Pressure, in. Hg | 28.99 | 28.99 | 28.99 |
| Critical Orifice Inlet (Ambient) Temperature, °F: | | | |
| Initial Ambient Temperature, °F | 79.0 | 80.2 | 80.4 |
| Final Ambient Temperature, °F | 79.2 | 80.4 | 79.2 |
| Avg. Critical Orifice Inlet Temperature (tamb), °F | 79.1 | 80.3 | 79.8 |
| Pump Vacuum, in. Hg | 18 | 18 | 18 |
| COMPUTED CALIBRATION RESULTS | | | |
| Critical Orifice Gas Volume (Vcr (std)), std. ft.³ | 6.396 | 6.389 | 6.392 |
| Dry Gas Meter Gas Volume (Vm (std)), std. ft.³ | 6.348 | 6.370 | 6.352 |
| Dry Gas Meter Calibration Factor (Y) | 1.008 | 1.003 | 1.006 |
| Orifice Meter Delta-H@ | 1.971 | 1.975 | 1.972 |
| AVERAGE CALIBRATION RESULTS | | | |
| Average Dry Gas Meter Calibration Factor (Y) | **1.006** | | |
| Average Orifice Meter Delta-H@ | **1.973** | | |
| CALIBRATION RESULTS COMPARISON | | | |
| *Criterion: Y Must Be Within 2% Of Average Y* | | | |
| Percent Difference Of Y From Average Y | 0.20% | 0.26% | 0.06% |
| Tolerance Result | **PASS** | **PASS** | **PASS** |
| COMPARISON WITH PRETEST RESULTS | | | |
| *Criterion: Y Must Be Within 5% Of Previous Y* | | | |
| % Difference Of Average Y From Previous Y | 1.32% | | |
| Tolerance Result | **PASS** | | |

Y = 1.005599109116136

Remarks:

# CONSOLE CALIBRATION WORKSHEET

Job No. 4951-03-04-01 Console No. N1

Date 3-16-99 Orifice No. D19

Performed By Daniel Neal K Factor 0.5121

Barometer 28.99 in. Hg. Previous Y 1.019

**NOTE:** Prior to running calibration, connect mercury manometer to sample orifice. Turn on pump and bring mercury manometer up to 18.0 in. Hg. Record mercury manometer and console vacuum gauge readings below. Insert critical orifice into console sample orifice. Set console vacuum gauge at 18.0 in. Hg. +/- the console vacuum gauge correction factor calculated below.

Mercury manometer readings: 9.1 + 8.9 = 18.0 In. Hg.

Console vacuum gauge reading: - 18.0 In. Hg.

Console vacuum gauge correction factor: 0.0 In. Hg.

| | RUN #1 | RUN #2 | RUN #3 |
|---|---|---|---|
| DGM Initial Volume: | | | |
| Initial: | 523.000 | 529.669 | 536.361 |
| Final: | 529.669 | 536.361 | 543.038 |
| DGM Inlet Temperature: | | | |
| Initial: | 81 | 81 | 81 |
| Final: | 81 | 81 | 82 |
| DGM Outlet Temperature: | | | |
| Initial: | 78 | 78 | 78 |
| Final: | 78 | 78 | 78 |
| Time of run ( In Seconds ): | 600 | 600 | 600 |
| Orifice Delta H (in. $H_2O$): | 1.5 | 1.5 | 1.5 |
| Room Temperature: | | | |
| Initial: | 79.0 | 80.2 | 80.4 |
| Final: | 79.2 | 80.4 | 79.2 |
| Pump Vacuum (in. Hg ): | 18.0 | 18.0 | 18.0 |

# M5 CONSOLE POST TEST CHECKLIST

Job No. 4951-03-04-01 Date 3-16-99

Console No. N1 Performed By Daniel Neal

Place a check (in black ink) in the space provided after the required checks are performed.

1. X Perform positive leak check of Delta H manometer. (See back of this sheet.)

2. X Leak check Delta P manometer.

3. N/A Clean pump.

4. X Clean muffler jar(s).

5. X Inspect/refill oiler jar.

6. X Calibrate DGM thermocouples:

| | | Reference Pyrometer °F | Console Pyrometer °F |
|---|---|---|---|
| (Note: Reading must be | DGM Inlet: | 68.4 | 68 |
| Within +/-2.5°F) | DGM Outlet: | 68.4 | 68 |

7. X Digital clock/timer in place and functional.

8. X Vacuum check. (Leak check at 25 in. Hg. vacuum. Leak rate should be zero.)

9. X Check indicator lights.

10. X Check thermocouple switched.

11. X Check fan.

12. X Check pump heater.

13. X Check heat controllers.

14. X Check Orsat pump and rotameter.

If any of the above items were replaced or repaired, please document that information below:

(PRETEST)

# METHOD 5 METERING CONSOLE CALIBRATION WITH CRITICAL ORIFICE

| | | | |
|---|---|---|---|
| MRI Project No. | 4951-03-04-01 | Metering Console No. | **N1** |
| Date: | 02/03/99 | Previous Dry Gas Meter Factor (Y): | 1.013 |
| Operator: | D. Neal | Calibrated Critical Orifice No. | D16 |
| | | Critical Orifice Coefficient in English Units (K'): | 0.44410 |
| | | Ambient Temperature Meter No. | Y-0815 |

| | Run 1 | Run 2 | Run 3 |
|---|---|---|---|
| CALIBRATION GAS VOLUME DATA | | | |
| Initial Dry Gas Meter Gas Volume, ft.³ | 221.701 | 227.425 | 233.159 |
| Final Dry Gas Meter Gas Volume, ft.³ | 227.425 | 233.159 | 238.885 |
| Net Dry Gas Meter Gas Volume (Vm), ft.³ | 5.724 | 5.734 | 5.726 |
| CALIBRATION CONDITIONS DATA | | | |
| Dry Gas Meter Temperature, °F: | | | |
| Initial Inlet Temperature, °F | 82.0 | 82.0 | 82.0 |
| Final Inlet Temperature, °F | 82.0 | 82.0 | 83.0 |
| Initial Outlet Temperature, °F | 79.0 | 79.0 | 79.0 |
| Final Outlet Temperature, °F | 79.0 | 79.0 | 79.0 |
| Average Dry Gas Meter Temperature (tm), °F | 80.5 | 80.5 | 80.8 |
| Time, seconds | 600 | 600 | 600 |
| Orifice Meter Delta-H, inches w.c. | 1.200 | 1.200 | 1.200 |
| Barometric Pressure, in. Hg | 28.72 | 28.72 | 28.72 |
| Critical Orifice Inlet (Ambient) Temperature, °F. | | | |
| Initial Ambient Temperature, °F | 80.4 | 79.8 | 80.6 |
| Final Ambient Temperature, °F | 78.6 | 81.0 | 81.4 |
| Avg. Critical Orifice Inlet Temperature (tamb), °F | 79.5 | 80.4 | 81 0 |
| Pump Vacuum, in. Hg | 18 | 18 | 18 |
| COMPUTED CALIBRATION RESULTS | | | |
| Critical Orifice Gas Volume (Vcr (std)), std. ft.³ | 5.493 | 5.488 | 5.485 |
| Dry Gas Meter Gas Volume (Vm (std)), std. ft.³ | 5.384 | 5.393 | 5.383 |
| Dry Gas Meter Calibration Factor (Y) | 1.020 | 1.018 | 1.019 |
| Orifice Meter Delta-H@ | 2.111 | 2.114 | 2.115 |
| AVERAGE CALIBRATION RESULTS | | | |
| Average Dry Gas Meter Calibration Factor (Y) | **1.019** | | |
| Average Orifice Meter Delta-H@ | **2.113** | | |
| CALIBRATION RESULTS COMPARISON | | | |
| *Criterion: Y Must Be Within 2% Of Average Y* | | | |
| Percent Difference Of Y From Average Y | 0.13% | 0.13% | 0.00% |
| Tolerance Result | **PASS** | **PASS** | **PASS** |
| COMPARISON WITH PRETEST RESULTS | | | |
| *Criterion: Y Must Be Within 5% Of Previous Y* | | | |
| % Difference Of Average Y From Previous Y | 0.59% | | |
| Tolerance Result | **PASS** | | |

Y = 1 019000018149022

Remarks:

# METHOD 5 METERING CONSOLE CALIBRATION WITH CRITICAL ORIFICE

| | | | |
|---|---|---|---|
| MRI Project No. | 4951-03-04-01 | Metering Console No. | **N5** |
| Date: | 3-4-99 | Previous Dry Gas Meter Factor (Y): | 1.038 |
| Operator: | D. Neal | Calibrated Critical Orifice No. | D12 |
| | | Critical Orifice Coefficient in English Units (K'): | 0.32080 |
| | | Ambient Temperature Meter No. | Y-0815 |

| | Run 1 | Run 2 | Run 3 |
|---|---|---|---|
| CALIBRATION GAS VOLUME DATA | | | |
| Initial Dry Gas Meter Gas Volume, ft.³ | 395.801 | 399.981 | 404.153 |
| Final Dry Gas Meter Gas Volume, ft.³ | 399.981 | 404.153 | 408.329 |
| Net Dry Gas Meter Gas Volume (Vm), ft.³ | 4.180 | 4.172 | 4.176 |
| CALIBRATION CONDITIONS DATA | | | |
| Dry Gas Meter Temperature, °F: | | | |
| Initial Inlet Temperature, °F | 73.0 | 73.0 | 74.0 |
| Final Inlet Temperature, °F | 73.0 | 74.0 | 75.0 |
| Initial Outlet Temperature, °F | 71.0 | 71.0 | 72.0 |
| Final Outlet Temperature, °F | 71.0 | 72.0 | 73.0 |
| Average Dry Gas Meter Temperature (tm), °F | 72.0 | 72.5 | 73.5 |
| Time, seconds | 600 | 600 | 600 |
| Orifice Meter Delta-H, inches w.c. | 0.530 | 0.530 | 0.530 |
| Barometric Pressure, in. Hg | 29.08 | 29.08 | 29.08 |
| Critical Orifice Inlet (Ambient) Temperature, °F: | | | |
| Initial Ambient Temperature, °F | 72.8 | 73.6 | 72.6 |
| Final Ambient Temperature, °F | 71.8 | 73.2 | 72.0 |
| Avg. Critical Orifice Inlet Temperature (tamb), °F | 72.3 | 73.4 | 72.3 |
| Pump Vacuum, in. Hg | 18 | 18 | 18 |
| COMPUTED CALIBRATION RESULTS | | | |
| Critical Orifice Gas Volume (Vcr (std)), std. ft.³ | 4.045 | 4.041 | 4.045 |
| Dry Gas Meter Gas Volume (Vm (std)), std. ft.³ | 4.037 | 4.026 | 4.022 |
| Dry Gas Meter Calibration Factor (Y) | 1.002 | 1.004 | 1.006 |
| Orifice Meter Delta-H@ | 1.762 | 1.764 | 1.758 |
| AVERAGE CALIBRATION RESULTS | | | |
| Average Dry Gas Meter Calibration Factor (Y) | **1.004** | | |
| Average Orifice Meter Delta-H@ | **1.762** | | |
| CALIBRATION RESULTS COMPARISON | | | |
| *Criterion: Y Must Be Within 2% Of Average Y* | | | |
| Percent Difference Of Y From Average Y | 0.19% | 0.00% | 0.19% |
| Tolerance Result | **PASS** | **PASS** | **PASS** |
| COMPARISON WITH PRETEST RESULTS | | | |
| *Criterion: Y Must Be Within 5% Of Previous Y* | | | |
| % Difference Of Average Y From Previous Y | 3.30% | | |
| Tolerance Result | **PASS** | | |

Y = 1.003696741625703

Remarks:

# CONSOLE CALIBRATION WORKSHEET

| | | | |
|---|---|---|---|
| Job No. | 4951-03-04-01 | Console No. | N5 |
| Date | 3-4-99 | Orifice No. | D12 |
| Performed By | D. Neal | K Factor | 0.3208 |
| Barometer | 29.08 in. Hg. | Previous Y | 1.038 |

**NOTE:** Prior to running calibration, connect mercury manometer to sample orifice. Turn on pump and bring mercury manometer up to 18.0 in. Hg. Record mercury manometer and console vacuum gauge readings below. Insert critical orifice into console sample orifice. Set console vacuum gauge at 18.0 in. Hg. +/- the console vacuum gauge correction factor calculated below.

Mercury manometer readings: 9.1 + 8.9 = 18.0 In. Hg. 3-18-99

Console vacuum gauge reading: -18.0 ~~0.5~~ In. Hg.

Console vacuum gauge correction factor: ~~18.0~~ 0 In. Hg.

| | RUN #1 | RUN #2 | RUN #3 |
|---|---|---|---|
| DGM Initial Volume: | | | |
| Initial: | 395.801 | 399.981 | 404.153 |
| Final: | 399.981 | 404.153 | 408.329 |
| DGM Inlet Temperature: | | | |
| Initial: | 73 | 73 | 74 |
| Final: | 73 | 74 | 75 |
| DGM Outlet Temperature: | | | |
| Initial: | 71 | 71 | 72 |
| Final: | 71 | 72 | 73 |
| Time of run ( In Seconds ): | 600 | 600 | 600 |
| Orifice Delta H (in. $H_2O$): | 0.53 | 0.53 | 0.53 |
| Room Temperature: | | | |
| Initial: | 72.8 | 73.6 | 72.6 |
| Final: | 71.8 | 73.2 | 72.0 |
| Pump Vacuum (in. Hg ): | 18.0 | 18.0 | 18.0 |

# M5 CONSOLE POST TEST CHECKLIST

Job No. 4951-03-04-01 Date 3-4-99

Console No. N5 Performed By D. Neal

Place a check (in black ink) in the space provided after the required checks are performed.

1. X Perform positive leak check of Delta H manometer. (See back of this sheet.)

2. X Leak check Delta P manometer.

3. N/A Clean pump.

4. X Clean muffler jar(s).

5. X Inspect/refill oiler jar.

6. X Calibrate DGM thermocouples:

| | | Reference Pyrometer °F | Console Pyrometer °F |
|---|---|---|---|
| (Note: Reading must be Within +/-2.5°F) | DGM Inlet: | 69.2 | 69 |
| | DGM Outlet: | 69.2 | 69 |

7. X Digital clock/timer in place and functional.

8. X Vacuum check. (Leak check at 25 in. Hg. vacuum. Leak rate should be zero.)

9. X Check indicator lights.

10. X Check thermocouple switched.

11. X Check fan.

12. X Check pump heater.

13. X Check heat controllers.

14. X Check Orsat pump and rotameter.

If any of the above items were replaced or repaired, please document that information below:

# METHOD 5 METERING CONSOLE CALIBRATION WITH CRITICAL ORIFICE

| | | | |
|---|---|---|---|
| MRI Project No. | 4951-03-04-01 | Metering Console No. | **N5** |
| Date: | 3-5-99 | Previous Dry Gas Meter Factor (Y): | 1.038 |
| Operator: | D. Neal | Calibrated Critical Orifice No. | D19 |
| | | Critical Orifice Coefficient in English Units (K'): | 0.51210 |
| | | Ambient Temperature Meter No. | Y-0815 |

| | Run 1 | Run 2 | Run 3 |
|---|---|---|---|
| CALIBRATION GAS VOLUME DATA | | | |
| Initial Dry Gas Meter Gas Volume, ft.³ | 433.603 | 440.291 | 446.998 |
| Final Dry Gas Meter Gas Volume, ft.³ | 440.291 | 446.998 | 453.702 |
| Net Dry Gas Meter Gas Volume (Vm), ft.³ | 6.688 | 6.707 | 6.704 |
| CALIBRATION CONDITIONS DATA | | | |
| Dry Gas Meter Temperature, °F: | | | |
| Initial Inlet Temperature, °F | 71.0 | 72.0 | 73.0 |
| Final Inlet Temperature, °F | 72.0 | 73.0 | 74.0 |
| Initial Outlet Temperature, °F | 67.0 | 68.0 | 69.0 |
| Final Outlet Temperature, °F | 67.0 | 68.0 | 69.0 |
| Average Dry Gas Meter Temperature (tm), °F | 69.3 | 70.3 | 71.3 |
| Time, seconds | 600 | 600 | 600 |
| Orifice Meter Delta-H, inches w.c. | 1.500 | 1.500 | 1.500 |
| Barometric Pressure, in. Hg | 28.99 | 28.99 | 28.99 |
| Critical Orifice Inlet (Ambient) Temperature, °F: | | | |
| Initial Ambient Temperature, °F | 68.8 | 69.2 | 70.2 |
| Final Ambient Temperature, °F | 68.6 | 69.8 | 69.4 |
| Avg. Critical Orifice Inlet Temperature (tamb), °F | 68.7 | 69.5 | 69.8 |
| Pump Vacuum, in. Hg | 18 | 18 | 18 |
| COMPUTED CALIBRATION RESULTS | | | |
| Critical Orifice Gas Volume (Vcr (std)), std. ft.³ | 6.459 | 6.454 | 6.452 |
| Dry Gas Meter Gas Volume (Vm (std)), std. ft.³ | 6.489 | 6.495 | 6.480 |
| Dry Gas Meter Calibration Factor (Y) | 0.995 | 0.994 | 0.996 |
| Orifice Meter Delta-H@ | 1.970 | 1.969 | 1.967 |
| AVERAGE CALIBRATION RESULTS | | | |
| Average Dry Gas Meter Calibration Factor (Y) | **0.995** | | |
| Average Orifice Meter Delta-H@ | **1.969** | | |
| CALIBRATION RESULTS COMPARISON | | | |
| *Criterion: Y Must Be Within 2% Of Average Y* | | | |
| Percent Difference Of Y From Average Y | 0.05% | 0.13% | 0.08% |
| Tolerance Result | **PASS** | **PASS** | **PASS** |
| COMPARISON WITH PRETEST RESULTS | | | |
| *Criterion: Y Must Be Within 5% Of Previous Y* | | | |
| % Difference Of Average Y From Previous Y | 4.16% | | |
| Tolerance Result | **PASS** | | |

Y = 0.994829489910738

Remarks:

# CONSOLE CALIBRATION WORKSHEET

Job No. 4951-03-04-01 Console No. N5

Date 3-5-99 Orifice No. D19

Performed By D. Neal K Factor 0.5121

Barometer 28.99 in. Hg. Previous Y ~~1.004~~ 1.038 3-18-99

**NOTE:** Prior to running calibration, connect mercury manometer to sample orifice. Turn on pump and bring mercury manometer up to 18.0 in. Hg. Record mercury manometer and console vacuum gauge readings below. Insert critical orifice into console sample orifice. Set console vacuum gauge at 18.0 in. Hg. +/- the console vacuum gauge correction factor calculated below.

Mercury manometer readings: 9.1 + 8.9 = 18.0 3-18-99 In. Hg.

Console vacuum gauge reading: -18.0 ~~01~~ aje In. Hg.

Console vacuum gauge correction factor: ~~18~~ 0 aje In. Hg.

| | RUN #1 | RUN #2 | RUN #3 |
|---|---|---|---|
| DGM Initial Volume: | | | |
| Initial: | 433.603 | 440.291 | 446.998 |
| Final: | 440.291 | 446.998 | 453.702 |
| DGM Inlet Temperature: | | | |
| Initial: | 71 | 72 | 73 |
| Final: | 72 | 73 | 74 |
| DGM Outlet Temperature: | | | |
| Initial: | 67 | 68 | 69 |
| Final: | 67 | 68 | 69 |
| Time of run ( In Seconds ): | 600 | 600 | 600 |
| Orifice Delta H (in. $H_2O$): | 1.5 | 1.5 | 1.5 |
| Room Temperature: | | | |
| Initial: | 68.8 | 69.2 | 70.2 |
| Final: | 68.6 | 69.8 | 69.4 |
| Pump Vacuum (in. Hg ): | 18.0 | 18.0 | 18.0 |

(PRETEST)

# METHOD 5 METERING CONSOLE CALIBRATION WITH CRITICAL ORIFICE

| | | | |
|---|---|---|---|
| MRI Project No. | 4951-03-04-01 | Metering Console No. | N5 |
| Date: | 02/04/99 | Previous Dry Gas Meter Factor (Y): | 1.015 |
| Operator: | D. Neal | Calibrated Critical Orifice No. | D16 |
| | | Critical Orifice Coefficient in English Units (K'): | 0.44410 |
| | | Ambient Temperature Meter No. | Y-0815 |

| | Run 1 | Run 2 | Run 3 |
|---|---|---|---|
| CALIBRATION GAS VOLUME DATA | | | |
| Initial Dry Gas Meter Gas Volume, ft.³ | 737.201 | 742.785 | 748.365 |
| Final Dry Gas Meter Gas Volume, ft.³ | 742.785 | 748.365 | 753.940 |
| Net Dry Gas Meter Gas Volume (Vm), ft.³ | 5.584 | 5.580 | 5.575 |
| CALIBRATION CONDITIONS DATA | | | |
| Dry Gas Meter Temperature, °F: | | | |
| Initial Inlet Temperature, °F | 76.0 | 77.0 | 78.0 |
| Final Inlet Temperature, °F | 77.0 | 78.0 | 79.0 |
| Initial Outlet Temperature, °F | 73.0 | 74.0 | 75.0 |
| Final Outlet Temperature, °F | 73.0 | 74.0 | 75.0 |
| Average Dry Gas Meter Temperature (tm), °F | 74.8 | 75.8 | 76.8 |
| Time, seconds | 600 | 600 | 600 |
| Orifice Meter Delta-H, inches w.c. | 1.200 | 1.200 | 1 200 |
| Barometric Pressure, in. Hg | 29.44 | 29.44 | 29.44 |
| Critical Orifice Inlet (Ambient) Temperature, °F: | | | |
| Initial Ambient Temperature, °F | 77.4 | 78.2 | 80.6 |
| Final Ambient Temperature, °F | 78.8 | 80.6 | 81.0 |
| Avg. Critical Orifice Inlet Temperature (tamb), °F | 78.1 | 79.4 | 80.8 |
| Pump Vacuum, in. Hg | 18 | 18 | 18 |
| COMPUTED CALIBRATION RESULTS | | | |
| Critical Orifice Gas Volume (Vcr (std)), std. ft.³ | 5.638 | 5.631 | 5.624 |
| Dry Gas Meter Gas Volume (Vm (std)), std. ft.³ | 5.441 | 5.427 | 5.412 |
| Dry Gas Meter Calibration Factor (Y) | 1.036 | 1.038 | 1.039 |
| Orifice Meter Delta-H@ | 2.075 | 2.077 | 2.078 |
| AVERAGE CALIBRATION RESULTS | | | |
| Average Dry Gas Meter Calibration Factor (Y) | **1.038** | | |
| Average Orifice Meter Delta-H@ | **2.077** | | |
| CALIBRATION RESULTS COMPARISON | | | |
| *Criterion. Y Must Be Within 2% Of Average Y* | | | |
| Percent Difference Of Y From Average Y | 0.14% | 0.00% | 0.14% |
| Tolerance Result | **PASS** | **PASS** | **PASS** |
| COMPARISON WITH PRETEST RESULTS | | | |
| *Criterion: Y Must Be Within 5% Of Previous Y* | | | |
| % Difference Of Average Y From Previous Y | 2.23% | | |
| Tolerance Result | **PASS** | | |

Y = 1.037641445042041

Remarks:

# METHOD 5 METERING CONSOLE CALIBRATION WITH CRITICAL ORIFICE

| | | | |
|---|---|---|---|
| MRI Project No. | 4951-03-04-01 | Metering Console No. | **N6** |
| Date: | 3-5-99 | Previous Dry Gas Meter Factor (Y): | 0.985 |
| Operator: | D. Neal | Calibrated Critical Orifice No. | D12 |
| | | Critical Orifice Coefficient in English Units (K'): | 0.32080 |
| | | Ambient Temperature Meter No. | Y-0815 |

| | Run 1 | Run 2 | Run 3 |
|---|---|---|---|
| CALIBRATION GAS VOLUME DATA | | | |
| Initial Dry Gas Meter Gas Volume, ft.$^3$ | 808.900 | 813.090 | 817.257 |
| Final Dry Gas Meter Gas Volume, ft.$^3$ | 813.090 | 817.257 | 821.430 |
| Net Dry Gas Meter Gas Volume (Vm), ft.$^3$ | 4.190 | 4.167 | 4.173 |
| CALIBRATION CONDITIONS DATA | | | |
| Dry Gas Meter Temperature, °F: | | | |
| Initial Inlet Temperature, °F | 70.0 | 72.0 | 73.0 |
| Final Inlet Temperature, °F | 71.0 | 72.0 | 73.0 |
| Initial Outlet Temperature, °F | 68.0 | 69.0 | 70.0 |
| Final Outlet Temperature, °F | 69.0 | 70.0 | 71.0 |
| Average Dry Gas Meter Temperature (tm), °F | 69.5 | 70.8 | 71.8 |
| Time, seconds | 600 | 600 | 600 |
| Orifice Meter Delta-H, inches w.c. | 0.550 | 0.550 | 0.550 |
| Barometric Pressure, in. Hg | 29.58 | 29.58 | 29.58 |
| Critical Orifice Inlet (Ambient) Temperature, °F: | | | |
| Initial Ambient Temperature, °F | 72.0 | 73.6 | 75.4 |
| Final Ambient Temperature, °F | 73.4 | 74.0 | 77.0 |
| Avg. Critical Orifice Inlet Temperature (tamb), °F | 72.7 | 73.8 | 76.2 |
| Pump Vacuum, in. Hg | 18 | 18 | 18 |
| COMPUTED CALIBRATION RESULTS | | | |
| Critical Orifice Gas Volume (Vcr (std)), std. ft.$^3$ | 4.113 | 4.108 | 4.099 |
| Dry Gas Meter Gas Volume (Vm (std)), std. ft.$^3$ | 4.136 | 4.104 | 4.102 |
| Dry Gas Meter Calibration Factor (Y) | 0.994 | 1.001 | 0.999 |
| Orifice Meter Delta-H@ | 1.808 | 1.808 | 1.812 |
| AVERAGE CALIBRATION RESULTS | | | |
| Average Dry Gas Meter Calibration Factor (Y) | **0.998** | | |
| Average Orifice Meter Delta-H@ | **1.809** | | |
| CALIBRATION RESULTS COMPARISON | | | |
| *Criterion. Y Must Be Within 2% Of Average Y* | | | |
| Percent Difference Of Y From Average Y | 0.40% | 0.29% | 0.11% |
| Tolerance Result | **PASS** | **PASS** | **PASS** |
| COMPARISON WITH PRETEST RESULTS | | | |
| *Criterion: Y Must Be Within 5% Of Previous Y* | | | |
| % Difference Of Average Y From Previous Y | 1.35% | | |
| Tolerance Result | **PASS** | | |

Y = 0.998277495031353

Remarks:

# CONSOLE CALIBRATION WORKSHEET

| | | | |
|---|---|---|---|
| Job No. | 4951-03-04-01 | Console No. | N6 |
| Date | 3-5-99 | Orifice No. | D12 |
| Performed By | D. Neal | K Factor | 0.3208 |
| Barometer | 29.58 in. Hg. | Previous Y | 0.985 |

**NOTE:** Prior to running calibration, connect mercury manometer to sample orifice. Turn on pump and bring mercury manometer up to 18.0 in. Hg. Record mercury manometer and console vacuum gauge readings below. Insert critical orifice into console sample orifice. Set console vacuum gauge at 18.0 in. Hg. +/- the console vacuum gauge correction factor calculated below.

Mercury manometer readings: 9.1 + 8.9 = 18.0 In. Hg.

Console vacuum gauge reading: - 18.0 In. Hg.

Console vacuum gauge correction factor: 0.0 In. Hg.

| | RUN #1 | RUN #2 | RUN #3 |
|---|---|---|---|
| DGM Initial Volume: | | | |
| Initial: | 808.900 | 813.090 | 817.257 |
| Final: | 813.090 | 817.257 | 821.430 |
| DGM Inlet Temperature: | | | |
| Initial: | 70 | 72 | 73 |
| Final: | 71 | 72 | 73 |
| DGM Outlet Temperature: | | | |
| Initial: | 68 | 69 | 70 |
| Final: | 69 | 70 | 71 |
| Time of run ( In Seconds ): | 600 | 600 | 600 |
| Orifice Delta H (in. $H_2O$): | 0.55 | 0.55 | 0.55 |
| Room Temperature: | | | |
| Initial: | 72.0 | 73.6 | 75.4 |
| Final: | 73.4 | 74.0 | 77.0 |
| Pump Vacuum (in. Hg ): | 18.0 | 18.0 | 18.0 |

# M5 CONSOLE POST TEST CHECKLIST

Job No. 4951-03-04-01 Date 3-5-99

Console No. N6 Performed By D. Neal

Place a check (in black ink) in the space provided after the required checks are performed.

1. X Perform positive leak check of Delta H manometer. (See back of this sheet.)

2. X Leak check Delta P manometer.

3. N/A Clean pump.

4. X Clean muffler jar(s).

5. X Inspect/refill oiler jar.

6. X Calibrate DGM thermocouples:

| | | Reference Pyrometer °F | Console Pyrometer °F |
|---|---|---|---|
| (Note: Reading must be Within +/-2.5°F) | DGM Inlet: | 69.2 | 68 |
| | DGM Outlet: | 69.2 | 68 |

7. X Digital clock/timer in place and functional.

8. X Vacuum check. (Leak check at 25 in. Hg. vacuum. Leak rate should be zero.)

9. X Check indicator lights.

10. X Check thermocouple switched.

11. X Check fan.

12. X Check pump heater.

13. X Check heat controllers.

14. X Check Orsat pump and rotameter.

If any of the above items were replaced or repaired, please document that information below:

(PRETEST)

# METHOD 5 METERING CONSOLE CALIBRATION WITH CRITICAL ORIFICE

| | | | |
|---|---|---|---|
| MRI Project No. | 4951-03-04-01 | Metering Console No. | N6 |
| Date: | 02/04/99 | Previous Dry Gas Meter Factor (Y): | 1.001 |
| Operator: | D. Neal | Calibrated Critical Orifice No. | D16 |
| | | Critical Orifice Coefficient in English Units (K'): | 0.44410 |
| | | Ambient Temperature Meter No. | Y-0815 |

| | Run 1 | Run 2 | Run 3 |
|---|---|---|---|
| CALIBRATION GAS VOLUME DATA | | | |
| Initial Dry Gas Meter Gas Volume, ft.³ | 304.801 | 310.713 | 316.616 |
| Final Dry Gas Meter Gas Volume, ft.³ | 310.713 | 316.616 | 322.513 |
| Net Dry Gas Meter Gas Volume (Vm), ft.³ | 5.912 | 5.903 | 5.897 |
| CALIBRATION CONDITIONS DATA | | | |
| Dry Gas Meter Temperature, °F: | | | |
| Initial Inlet Temperature, °F | 79.0 | 80.0 | 80.0 |
| Final Inlet Temperature, °F | 80.0 | 80.0 | 80.0 |
| Initial Outlet Temperature, °F | 76.0 | 77.0 | 77.0 |
| Final Outlet Temperature, °F | 77.0 | 77.0 | 77.0 |
| Average Dry Gas Meter Temperature (tm), °F | 78.0 | 78.5 | 78.5 |
| Time, seconds | 600 | 600 | 600 |
| Orifice Meter Delta-H, inches w.c. | 1.200 | 1.200 | 1.200 |
| Barometric Pressure, in Hg | 29.44 | 29.44 | 29.44 |
| Critical Orifice Inlet (Ambient) Temperature, °F: | | | |
| Initial Ambient Temperature, °F | 79.6 | 75 8 | 81.6 |
| Final Ambient Temperature, °F | 79.0 | 79.8 | 82.6 |
| Avg. Critical Orifice Inlet Temperature (tamb), °F | 79.3 | 77.8 | 82.1 |
| Pump Vacuum, in. Hg | 18 | 18 | 18 |
| COMPUTED CALIBRATION RESULTS | | | |
| Critical Orifice Gas Volume (Vcr (std)), std. ft.³ | 5.632 | 5.640 | 5.617 |
| Dry Gas Meter Gas Volume (Vm (std)), std. ft.³ | 5.726 | 5.712 | 5.706 |
| Dry Gas Meter Calibration Factor (Y) | 0.984 | 0.987 | 0.984 |
| Orifice Meter Delta-H@ | 2.067 | 2.060 | 2.076 |
| AVERAGE CALIBRATION RESULTS | | | |
| Average Dry Gas Meter Calibration Factor (Y) | **0.985** | | |
| Average Orifice Meter Delta-H@ | **2.068** | | |
| CALIBRATION RESULTS COMPARISON | | | |
| *Criterion. Y Must Be Within 2% Of Average Y* | | | |
| Percent Difference Of Y From Average Y | 0.16% | 0.23% | 0.07% |
| Tolerance Result | **PASS** | **PASS** | **PASS** |
| COMPARISON WITH PRETEST RESULTS | | | |
| *Criterion: Y Must Be Within 5% Of Previous Y* | | | |
| % Difference Of Average Y From Previous Y | 1.59% | | |
| Tolerance Result | **PASS** | | |

Y = 0 985100226186568

Remarks:

CRORCALB.WK4 10/24/96 (rev. 4951PRE.WK4 02/04/99 03:01 PM)

# METHOD 5 METERING CONSOLE CALIBRATION
# CRITICAL ORIFICE BRACKETING DATA

| | |
|---|---|
| MRI Project No. | 4951-03-04-01 |
| Date: | 3-5-99 |
| Operator: | D. Neal |
| Metering Console No. | N5 |
| Dry Gas Meter Factor (Y): | 0.995 |
| Orifice Used for the Calibration: | D19 |
| Ambient Temperature Meter No. | Y-0815 |

Note: Critical orifice coefficients are in English units.

| Critical Orifice Being Evaluated | |
|---|---|
| Critical Orifice No. | **D19** |
| Critical Orifices Used For Bracketing | |
| First Orifice | |
| Critical Orifice No. | **D16** |
| Coefficient (K'): | 0.44410 |
| Second Orifice | |
| Critical Orifice No. | **D24** |
| Coefficient (K'): | 0.65490 |

| | First Orifice | Second Orifice |
|---|---|---|
| CALIBRATION GAS VOLUME DATA | | |
| Initial Dry Gas Meter Gas Volume, ft.³ | 466.702 | 472.602 |
| Final Dry Gas Meter Gas Volume, ft.³ | 472.446 | 481.101 |
| Net Dry Gas Meter Gas Volume (Vm), ft.³ | 5.744 | 8.499 |
| CALIBRATION CONDITIONS DATA | | |
| Dry Gas Meter Temperature, °F: | | |
| Initial Inlet Temperature, °F | 74.0 | 74.0 |
| Final Inlet Temperature, °F | 74.0 | 75.0 |
| Initial Outlet Temperature, °F | 71.0 | 71.0 |
| Final Outlet Temperature, °F | 71.0 | 71.0 |
| Average Dry Gas Meter Temperature (tm), °F | 72.5 | 72.8 |
| Time, seconds | 600 | 600 |
| Orifice Meter Delta-H, inches w.c. | 1.100 | 2.350 |
| Barometric Pressure, in. Hg | 28.99 | 28.99 |
| Critical Orifice Inlet (Ambient) Temperature, °F: | | |
| Initial Ambient Temperature, °F | 70.2 | 71.0 |
| Final Ambient Temperature, °F | 69.6 | 69.4 |
| Average Critical Orifice Inlet Temperature (tamb), °F | 69.9 | 70.2 |
| Pump Vacuum, in. Hg | 18 | 18 |
| COMPUTED CALIBRATION RESULTS | | |
| Critical Orifice Gas Volume (Vcr (std)), std. ft.³ | 5.595 | 8.248 |
| Dry Gas Meter Gas Volume (Vm (std)), std. ft.³ | 5.534 | 8.210 |
| Factor (Y) Obtained With Bracketing Orifice | 1.011 | 1.005 |
| CRITICAL ORIFICE ACCEPTABILITY | | |
| *Criterion: All Ys Must Be Within 2% Of All Other Ys* | | |
| Larger % Difference Between Dry Gas Meter Factor (Y) And Factor (Y) Obtained With The Bracketing Orifice | 1.61% | 0.97% |
| Larger % Difference Between Factors (Ys) Obtained With Bracketing Orifices | 0.64% | |
| Acceptability Result | **All Orifices Are Acceptable** | |

Remarks:

# CONSOLE BRACKETING WORKSHEET

Job No. 4951-03-04-01 Console No. N5

Date 3-5-99 Bracketing Orifice No.1 D16

Performed By D. Neal K Factor 0.4441

Calibration Orifice No. D19 Bracketing Orifice No.2 D24

New Y Factor 0.995 K Factor 0.6549

Barometer 28.99 in. Hg.

**NOTE:** Prior to running calibration, connect mercury manometer to sample orifice. Turn on pump and bring mercury manometer up to 18.0 in. Hg. Record mercury manometer and console vacuum gauge readings below. Insert critical orifice into console sample orifice. Set console vacuum gauge at 18.0 in. Hg. +/- the console vacuum gauge correction factor calculated below.

Mercury manometer readings: 9.1 + 8.9 = 18.0 in. Hg.

Console vacuum gauge reading: - 18.0 in. Hg.

Console vacuum gauge correction factor: 0.0 in. Hg.

| | RUN #1 | RUN #2 |
|---|---|---|
| DGM Initial Volume: | | |
| Initial: | 466.702 | 472.602 |
| Final: | 472.446 | 481.101 |
| DGM Inlet Temperature: | | |
| Initial: | 74 | 74 |
| Final: | 74 | 75 |
| DGM Outlet Temperature: | | |
| Initial: | 71 | 71 |
| Final: | 71 | 71 |
| Time of run ( In Seconds ): | 600 | 600 |
| Orifice Delta H(in. $H_2O$): | 1.1 | 2.35 |
| Room Temperature: | | |
| Initial: | 70.2 | 71.0 |
| Final: | 69.6 | 69.4 |
| Pump Vacuum (in. Hg ): | 18.0 | 18.0 |

# METHOD 5 METERING CONSOLE CALIBRATION
# CRITICAL ORIFICE BRACKETING DATA

| | | | |
|---|---|---|---|
| MRI Project No. | 4951-03-04-01 | Critical Orifice Being Evaluated | |
| Date: | 3-5-99 | Critical Orifice No. | **D12** |
| Operator: | D. Neal | Critical Orifices Used For Bracketing | |
| Metering Console No. | N5 | First Orifice | |
| Dry Gas Meter Factor (Y): | 1.004 | Critical Orifice No. | **D16** |
| Orifice Used for the Calibration: | D12 | Coefficient (K'): | 0.44410 |
| Ambient Temperature Meter No. | Y-0815 | Second Orifice | |
| | | Critical Orifice No. | **D24** |
| | | Coefficient (K'): | 0.65490 |

Note: Critical orifice coefficients are in English units

| | First Orifice | Second Orifice |
|---|---|---|
| CALIBRATION GAS VOLUME DATA | | |
| Initial Dry Gas Meter Gas Volume, ft.$^3$ | 466.702 | 472.602 |
| Final Dry Gas Meter Gas Volume, ft.$^3$ | 472.446 | 481.101 |
| Net Dry Gas Meter Gas Volume (Vm), ft.$^3$ | 5.744 | 8.499 |
| CALIBRATION CONDITIONS DATA | | |
| Dry Gas Meter Temperature, °F: | | |
| Initial Inlet Temperature, °F | 74.0 | 74.0 |
| Final Inlet Temperature, °F | 74.0 | 75.0 |
| Initial Outlet Temperature, °F | 71.0 | 71.0 |
| Final Outlet Temperature, °F | 71.0 | 71.0 |
| Average Dry Gas Meter Temperature (tm), °F | 72.5 | 72.8 |
| Time, seconds | 600 | 600 |
| Orifice Meter Delta-H, inches w.c. | 1.100 | 2.350 |
| Barometric Pressure, in. Hg | 28.99 | 28.99 |
| Critical Orifice Inlet (Ambient) Temperature, °F: | | |
| Initial Ambient Temperature, °F | 70.2 | 71.0 |
| Final Ambient Temperature, °F | 69.6 | 69.4 |
| Average Critical Orifice Inlet Temperature (tamb), °F | 69.9 | 70.2 |
| Pump Vacuum, in. Hg | 18 | 18 |
| COMPUTED CALIBRATION RESULTS | | |
| Critical Orifice Gas Volume (Vcr (std)), std. ft.$^3$ | 5.595 | 8.248 |
| Dry Gas Meter Gas Volume (Vm (std)), std. ft.$^3$ | 5.534 | 8.210 |
| Factor (Y) Obtained With Bracketing Orifice | 1.011 | 1.005 |
| CRITICAL ORIFICE ACCEPTABILITY | | |
| *Criterion: All Ys Must Be Within 2% Of All Other Ys* | | |
| Larger % Difference Between Dry Gas Meter Factor (Y) And Factor (Y) Obtained With The Bracketing Orifice | 0.70% | 0.06% |
| Larger % Difference Between Factors (Ys) Obtained With Bracketing Orifices | 0.64% | |
| Acceptability Result | **All Orifices Are Acceptable** | |

Remarks:

# STACK THERMOCOUPLE CALIBRATION DATA FORM

Job No. 4951-03-04-01 Stack Thermocouple No. 36-11

Date 3-15-99 Probe No. 3-1

Ambient Temp. (°F) 69 Barometer 29.23 in.Hg

Performed By Daniel Neal Pyrometer No. Y-0815

Avg. Stack Temp. (°F) 163

Reference Instrument: Hart Scientific Model No. 9100A, Serial No. 84414 Dry-well, HDRC Handheld Block A. This instrument is calibrated in accordance with ITS-90 and ANSI/NCSL Z540-1.

| Reference Instrument Temp. (°F) | Pyrometer Temp. (°F) | Temp. Difference (°F) | Temp. Difference (%) |
|---|---|---|---|
| 69.2 | 70.0 | -0.8 | -0.15 |
| 100.0 | 100.0 | 0.0 | 0.0 |
| 150.0 | 150.0 | 0.0 | 0.0 |
| 200.0 | 201.4 | -1.4 | -0.21 |
| | | | |
| | | | |
| | | | |
| | | | |
| | | | |
| | | | |
| | | | |
| | | | |
| | | | |
| | | | |

$$\frac{(\text{ref. Temp., F} + 460) - (\text{pyro. Temp., F} + 460)}{(\text{ref. Temp., F} + 460)} \times 100 \leq 1.5\%$$

# STACK THERMOCOUPLE CALIBRATION DATA FORM

Job No. 4951-03-04-01 Stack Thermocouple No. 36-13

Date 3-15-99 Probe No. 3-2

Ambient Temp. (°F) 69 Barometer 29.23 in.Hg

Performed By Daniel Neal Pyrometer No. Y-0815

Avg. Stack Temp. (°F) 161

Reference Instrument: Hart Scientific Model No. 9100A, Serial No. 84414 Dry-well, HDRC Handheld Block A. This instrument is calibrated in accordance with ITS-90 and ANSI/NCSL Z540-1.

| Reference Instrument Temp. (°F) | Pyrometer Temp. (°F) | Temp. Difference (°F) | Temp. Difference (%) |
|---|---|---|---|
| 69.2 | 69.8 | -0.6 | -0.11 |
| 100.0 | 100.0 | 0.0 | 0.0 |
| 150.0 | 150.0 | 0.0 | 0.0 |
| 200.0 | 201.2 | -1.2 | -0.18 |
| | | | |
| | | | |
| | | | |
| | | | |
| | | | |
| | | | |
| | | | |
| | | | |
| | | | |
| | | | |

$$\frac{(\text{ref. Temp., F} + 460) - (\text{pyro. Temp., F} + 460)}{(\text{ref. Temp., F} + 460)} \times 100 \leq 1.5\%$$

# STACK THERMOCOUPLE CALIBRATION DATA FORM

Job No. 4951-03-04-01 Stack Thermocouple No. 36-10

Date 3-15-99 Probe No. 3-4

Ambient Temp. (°F) 69 Barometer 29.23 in.Hg

Performed By Daniel Neal Pyrometer No. Y-0815

Avg. Stack Temp. (°F) 175

Reference Instrument: Hart Scientific Model No. 9100A, Serial No. 84414 Dry-well, HDRC Handheld Block A. This instrument is calibrated in accordance with ITS-90 and ANSI/NCSL Z540-1.

| Reference Instrument Temp. (°F) | Pyrometer Temp. (°F) | Temp. Difference (°F) | Temp. Difference (%) |
|---|---|---|---|
| 69.0 | 70.0 | -1.0 | -0.19 |
| 100.0 | 100.0 | 0.0 | 0.0 |
| 150.0 | 150.2 | -0.2 | -0.03 |
| 200.0 | 200.8 | -0.8 | -0.12 |
| | | | |
| | | | |
| | | | |
| | | | |
| | | | |
| | | | |
| | | | |
| | | | |
| | | | |
| | | | |

$$\frac{(\text{ref. Temp., F} + 460) - (\text{pyro. Temp., F} + 460)}{(\text{ref. Temp., F} + 460)} \times 100 \leq 1.5\%$$

# STACK THERMOCOUPLE CALIBRATION DATA FORM

Job No. 4951-03-04-01 Stack Thermocouple No. 36-12

Date 3-15-99 Probe No. 3-5

Ambient Temp. (°F) 69 Barometer 29.23 in.Hg

Performed By Daniel Neal Pyrometer No. Y-0815

Avg. Stack Temp. (°F) 69

Reference Instrument: Hart Scientific Model No. 9100A, Serial No. 84414 Dry-well, HDRC Handheld Block A. This instrument is calibrated in accordance with ITS-90 and ANSI/NCSL Z540-1.

| Reference Instrument Temp. (°F) | Pyrometer Temp. (°F) | Temp. Difference (°F) | Temp. Difference (%) |
|---|---|---|---|
| 69.0 | 69.6 | -0.6 | -0.11 |
| 100.0 | 100.0 | 0.0 | 0.0 |
| 150.0 | 150.0 | 0.0 | 0.0 |
| 200.0 | 201.2 | -1.2 | -0.18 |
| | | | |
| | | | |
| | | | |
| | | | |
| | | | |
| | | | |
| | | | |
| | | | |
| | | | |
| | | | |

$$\frac{(\text{ref. Temp., F} + 460) - (\text{pyro. Temp., F} + 460)}{(\text{ref. Temp., F} + 460)} \times 100 \leq 1.5\%$$

# STACK THERMOCOUPLE CALIBRATION DATA FORM

Job No. 4951-03-04-01 Stack Thermocouple No. 48-14

Date 3-15-99 Probe No. 4-2

Ambient Temp. (°F) 69 Barometer 29.23 in.Hg

Performed By Daniel Neal Pyrometer No. Y-0815

Avg. Stack Temp. (°F) 131

Reference Instrument: Hart Scientific Model No. 9100A, Serial No. 84414 Dry-well, HDRC Handheld Block A. This instrument is calibrated in accordance with ITS-90 and ANSI/NCSL Z540-1.

| Reference Instrument Temp. (°F) | Pyrometer Temp. (°F) | Temp. Difference (°F) | Temp. Difference (%) |
|---|---|---|---|
| 69.0 | 69.6 | -0.6 | -0.11 |
| 100.0 | 100.0 | 0.0 | 0.0 |
| 150.0 | 150.0 | 0.0 | 0.0 |
| 200.0 | 201.0 | -1.0 | -0.15 |
| | | | |
| | | | |
| | | | |
| | | | |
| | | | |
| | | | |
| | | | |
| | | | |
| | | | |
| | | | |

$$\frac{(\text{ref. Temp., F} + 460) - (\text{pyro. Temp., F} + 460)}{(\text{ref. Temp., F} + 460)} \times 100 \leq 1.5\%$$

# STACK THERMOCOUPLE CALIBRATION DATA FORM

Job No. 4951-03-04-01 Stack Thermocouple No. 60-3

Date 3-15-99 Probe No. 5-6

Ambient Temp. (°F) 69 Barometer 29.23 in.Hg

Performed By Daniel Neal Pyrometer No. Y-0815

Avg. Stack Temp. (°F) 96

Reference Instrument: Hart Scientific Model No. 9100A, Serial No. 84414 Dry-well, HDRC Handheld Block A. This instrument is calibrated in accordance with ITS-90 and ANSI/NCSL Z540-1.

| Reference Instrument Temp. (°F) | Pyrometer Temp. (°F) | Temp. Difference (°F) | Temp. Difference (%) |
|---|---|---|---|
| 69.0 | 69.2 | -0.2 | -0.04 |
| 100.0 | 100.0 | 0.0 | 0.0 |
| 150.0 | 150.2 | -0.2 | -0.03 |
| 200.0 | 201.4 | -1.4 | -0.21 |
| | | | |
| | | | |
| | | | |
| | | | |
| | | | |
| | | | |
| | | | |
| | | | |
| | | | |
| | | | |

$$\frac{(\text{ref. Temp., F} + 460) - (\text{pyro. Temp., F} + 460)}{(\text{ref. Temp., F} + 460)} \times 100 \leq 1.5\%$$

# Type S Pitot Tube Inspection Data Form

Pitot Tube #: M-136 Date: 3-16-99 Performed By: Daniel Neal

Probe #: 3-1 Job #: 4951-03-04-01

Pitot tube assembly level? X Yes _____ No

Pitot tube openings damaged? _____ Yes (explain below) X No

$\alpha_1$ = 1 ° (<10 °), $\alpha_2$ = 0 ° (<10 °)

$\beta_1$ = 1 ° (<5 °), $\beta_2$ = 1 ° (<5 °)

$\gamma$ = 1 °, $\theta$ = 2 °, A = 0.742 (in)

z = A sin $\gamma$ 0.013 (in); (< 0.125 in)

$\omega$ = A sin $\theta$ 0.026 (in); (< 0.03125 in)

$P_A$ = 0.367 (in), $P_B$ = 0.375 (in), $D_\tau$ = 0 25 (in)

Calibration required? _____ Yes X No

Comments: _____

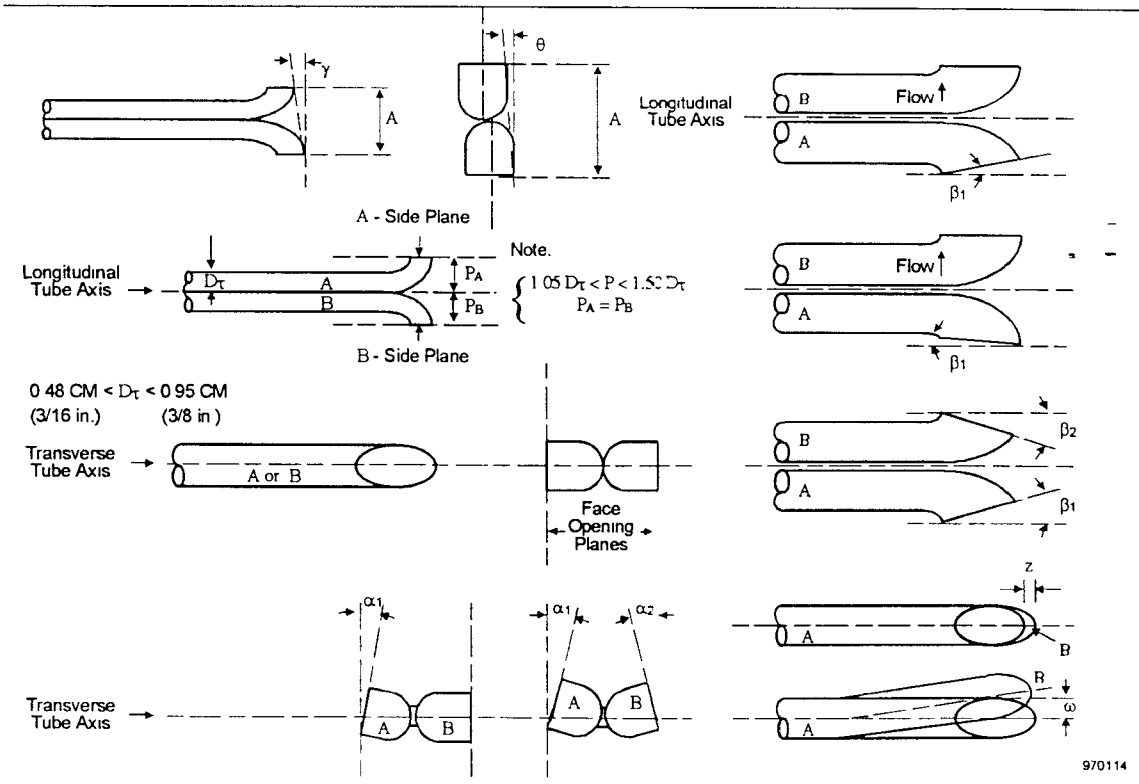

# Type S Pitot Tube Inspection Data Form

Pitot Tube # M-126 Date: 3-16-99 Performed By: Daniel Neal

Probe #: 3-2 Job #: 4951-03-04-01

Pitot tube assembly level? X Yes _____ No

Pitot tube openings damaged? _____ Yes (explain below) X No

$\alpha_1$ = 1 ° (<10 °), $\alpha_2$ = 2 ° (<10 °)

$\beta_1$ = 1 ° (<5 °), $\beta_2$ = 1 ° (<5 °)

$\gamma$ = 2 °, $\theta$ = 2 °, A = 0.745 (in)

$z = A \sin \gamma$ 0.026 (in); (< 0.125 in)

$\omega = A \sin \theta$ 0.026 (in); (< 0.03125 in)

$P_A$ = 0.345 (in), $P_B$ = 0.400 (in), $D_\tau$ = 0.25 (in)

Calibration required? _____ Yes X No

Comments: _____

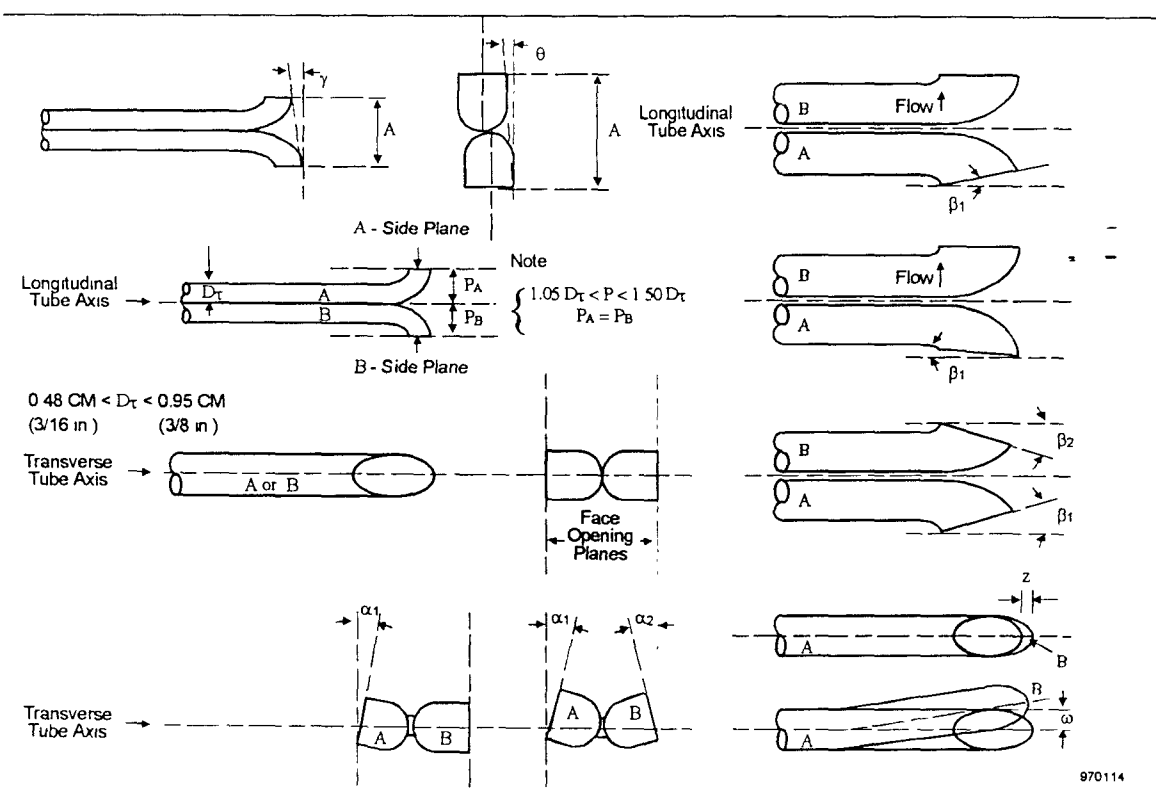

# Type S Pitot Tube Inspection Data Form

Pitot Tube #: M-103 Date: 3-16-99 Performed By: Daniel Neal

Probe #: 3-4 Job #: 4951-03-04-01

Pitot tube assembly level? X Yes _____ No

Pitot tube openings damaged? X Yes (explain below) _____ No

$\alpha_1$ = 1 ° (<10 °), $\alpha_2$ = 1 ° (<10 °)

$\beta_1$ = 1 ° (<5 °), $\beta_2$ = 0 ° (<5 °)

$\gamma$ = 2 °, $\theta$ = 3 °, A = 0.757 (in)

$z = A \sin \gamma$ 0.026 (in); (< 0.125 in)

$\omega = A \sin \theta$ 0.040 (in); (< 0.03125 in)

$P_A$ = 0.381 (in), $P_B$ = 0.376 (in), $D_\tau$ = 0.25 (in)

Calibration required? _____ Yes X No

Comments: Negative impact side of pitot bent partially out of round.

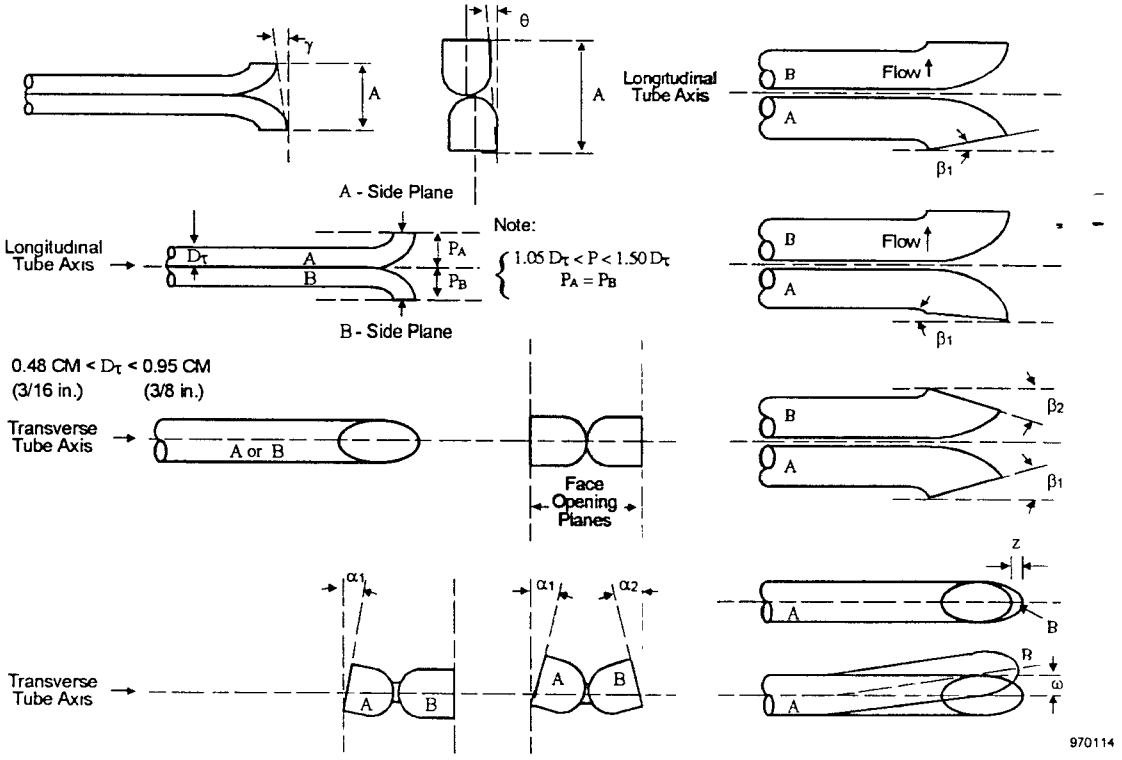

# Type S Pitot Tube Inspection Data Form

Pitot Tube #: M-101 Date: 3-16-99 Performed By: Daniel Neal

Probe #: 3-5 Job #: 4951-03-04-01

Pitot tube assembly level? X Yes _____ No

Pitot tube openings damaged? _____ Yes (explain below) X No

$\alpha_1$ = 1 ° (<10 °), $\alpha_2$ = 2 ° (<10 °)

$\beta_1$ = 1 ° (<5 °), $\beta_2$ = 1 ° (<5 °)

$\gamma$ = 4 °, $\theta$ = 1 °, A = 0.750 (in)

$z = A \sin \gamma$ 0.052 (in); (< 0.125 in)

$\omega = A \sin \theta$ 0.013 (in); (< 0.03125 in)

$P_A$ = 0.375 (in), $P_B$ = 0.375 (in), $D_\tau$ = 0.25 (in)

Calibration required? _____ Yes X No

Comments: _____

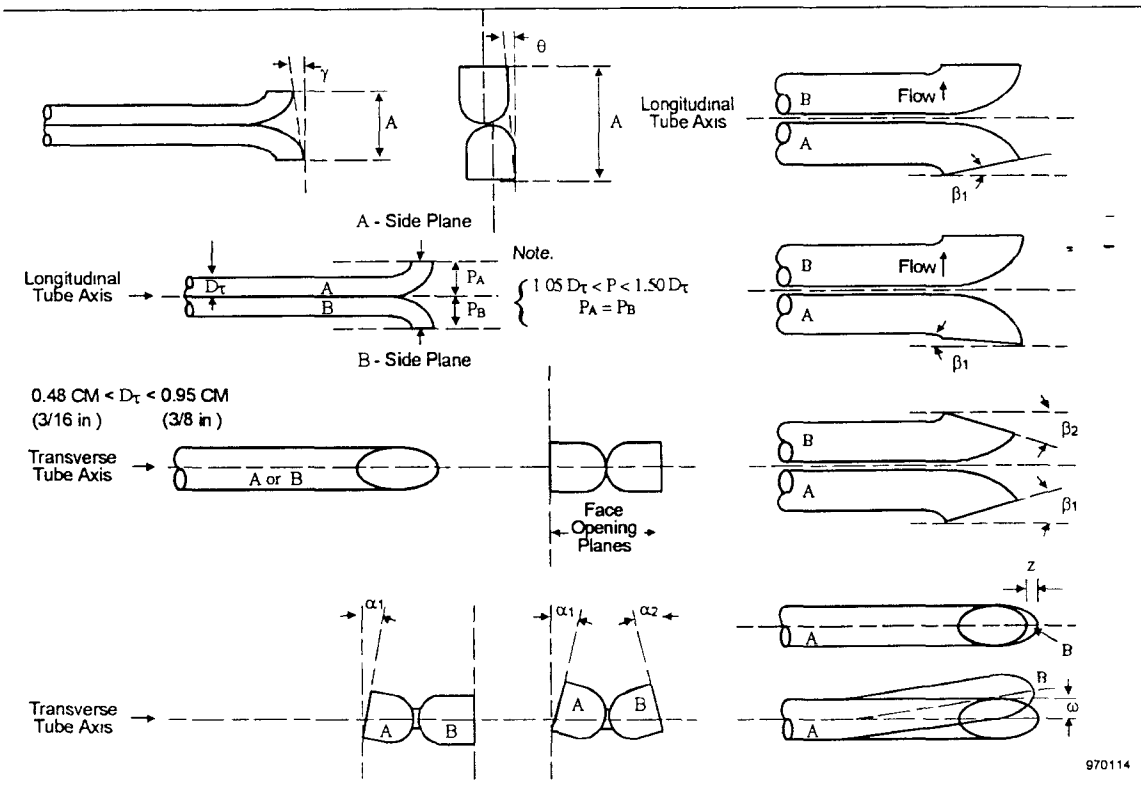

# Type S Pitot Tube Inspection Data Form

Pitot Tube #: M-106 Date: 3-16-99 Performed By: Daniel Neal

Probe #: 4-2 Job #: 4951-03-04-01

Pitot tube assembly level? X Yes _____ No

Pitot tube openings damaged? _____ Yes (explain below) X No

$\alpha_1$ = 1 ° (<10 °), $\alpha_2$ = 0 ° (<10 °)

$\beta_1$ = 1 ° (<5 °), $\beta_2$ = 1 ° (<5 °)

$\gamma$ = 1 °, $\theta$ = 2 °, A = 0 750 (in)

$z = A \sin \gamma$ 0.013 (in); (< 0.125 in)

$\omega = A \sin \theta$ 0.026 (in); (< 0.03125 in)

$P_A$ = 0.370 (in), $P_B$ = 0.380 (in), $D_\tau$ = 0.25 (in)

Calibration required? _____ Yes X No

Comments: _____

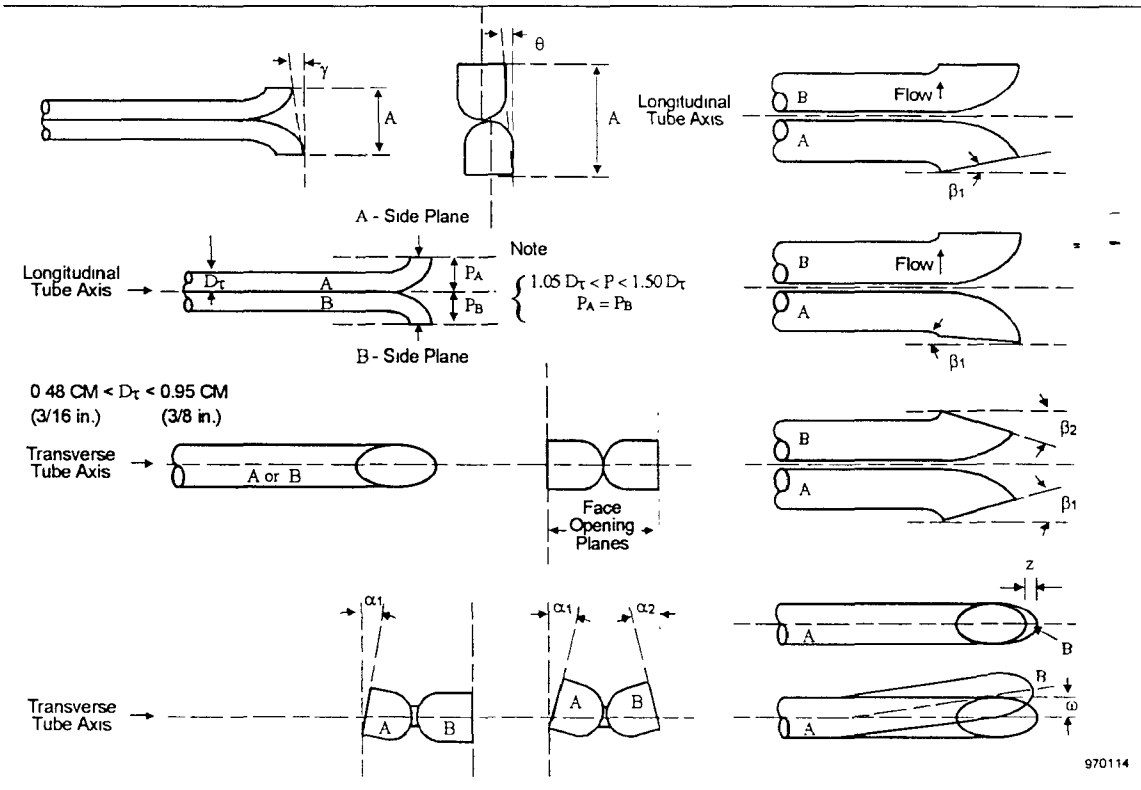

# Type S Pitot Tube Inspection Data Form

Pitot Tube #: M-115 Date: 3-16-99 Performed By: Daniel Neal

Probe #: 5-6 Job #: 4951-03-04-01

Pitot tube assembly level? X Yes _____ No

Pitot tube openings damaged? _____ Yes (explain below) X No

$\alpha_1$ = 1 ° (<10 °), $\alpha_2$ = 1 ° (<10 °)

$\beta_1$ = 1 ° (<5 °), $\beta_2$ = 1 ° (<5 °)

$\gamma$ = 0 °, $\theta$ = 0 °, A = 0.757 (in)

z = A sin $\gamma$ 0.0 (in); (< 0.125 in)

$\omega$ = A sin $\theta$ 0.0 (in); (< 0.03125 in)

$P_A$ = 0.375 (in), $P_B$ = 0.382 (in), $D_\tau$ = 0.25 (in)

Calibration required? _____ Yes X No

Comments: _____

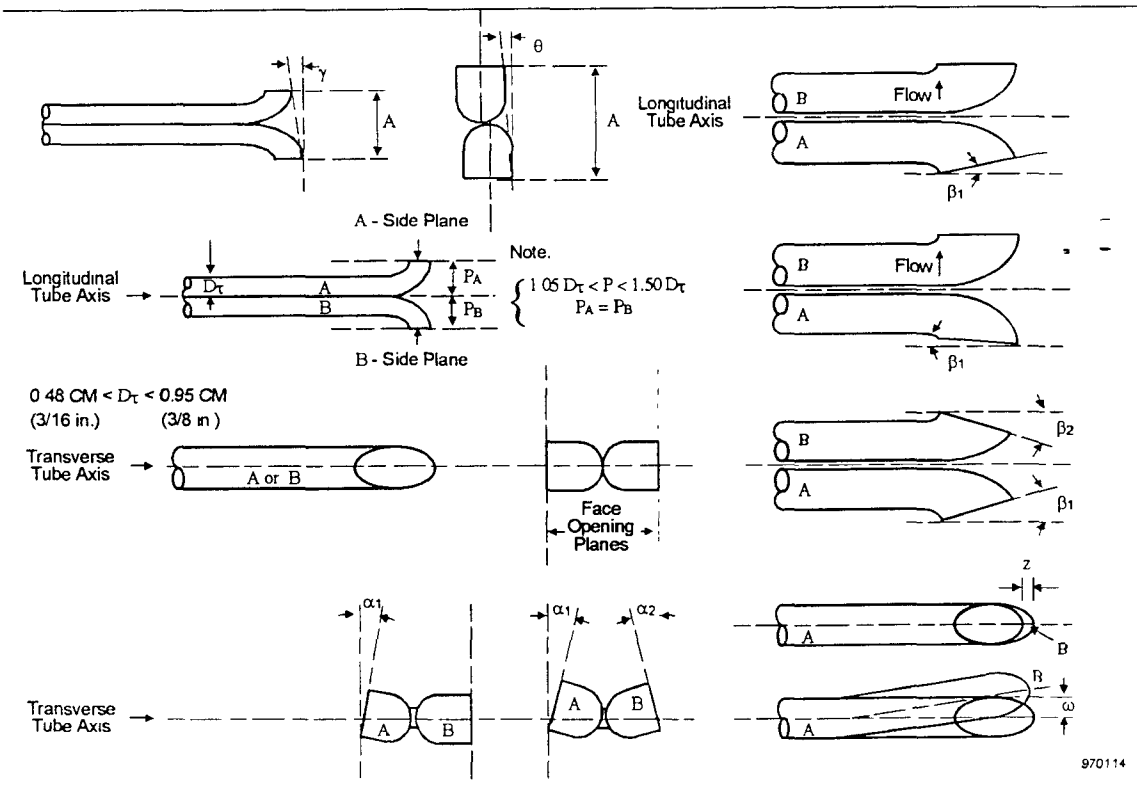

# SAMPLE BOX FILTER THERMOCOUPLE CALIBRATION DATA FORM

Job No. 4951-03-04-01 Console Pyrometer No. N6

Date 3-15-99 Reference Pyrometer No. Y-0815

Ambient Temp. (°F) 69 Reference TC No. T-23

Performed By D. Neal Barometer 29.23 in. Hg

Calibration Method: Heat sample box to 250° F with M5 Console. Then, check filter box temperature by comparing M5 console temperature meter against calibrated pyrometer and thermocouple.

| Sample Box No. | Reference Pyrometer Temp. (°F) | Console Pyrometer Temp. (°F) | Temperature Difference (Tolerance: +/- 5.4 °F) |
|---|---|---|---|
| 10 | 243.4 | 242 | 1.4 |
| 10285 | 239.8 | 243 | -3.2 |
| 12001 | 248.2 | 249 | -0.8 |
| 12003 | 244.4 | 245 | -0.6 |
| | | | |
| | | | |
| | | | |
| | | | |
| | | | |
| | | | |
| | | | |
| | | | |
| | | | |
| | | | |

# XAD THERMOCOUPLE CALIBRATION DATA FORM

Job No. 4951-03-04-01 Pyrometer No. Y-0815

Date 3-5-99 Reference Thermometer ASTM 63F

Ambient Temp. (°F) 66 Serial Number 1979299

Performed By D. Neal Barometer 28.99 in. Hg

Calibration Method: Water bath with ASTM thermometer @ ambient and ice temperatures.

| XAD Thermocouple Number | Reference Thermometer Temp. (°F) | Pyrometer Temperature (°F) | Temperature Difference (Tolerance +/- 2 °F) |
|---|---|---|---|
| 4 | 64.4 | 64.8 | +0.4 |
| 91-11 | 64.4 | 64.8 | +0.4 |
| | | | |
| | | | |
| | | | |
| | | | |
| | | | |
| | | | |
| | | | |
| | | | |
| | | | |
| | | | |
| | | | |
| | | | |

# GOOSENECK THERMOCOUPLE CALIBRATION DATA FORM

Job No. 4951-03-04-01 Pyrometer No. Y-0815

Date 3-5-99 Reference Thermometer ASTM 63F

Ambient Temp. (°F) 66 Serial Number 1979299

Performed By D. Neal Barometer 28.99 in. Hg

Calibration Method: Ambient water bath with ASTM thermometer.

| Goose-neck T.C. No. | Leak Check & Check Valve Pass/No-pass | Ref. Thermometer Temperature (°F) | Pyrometer Temp. (°F) | Temp. Difference (Tolerance +/- 2 °F) |
|---|---|---|---|---|
| UH-12 | Pass | 64.4 | 64.6 | +0.2 |
| UH-32 | Pass | 64.4 | 64.6 | +0.2 |
| UH-34 | Pass | 64.4 | 64.6 | +0.2 |
| UH-37 | Pass | 64.4 | 64.8 | +0.4 |
| | | | | |
| | | | | |
| | | | | |
| | | | | |
| | | | | |
| | | | | |
| | | | | |
| | | | | |
| | | | | |
| | | | | |

## ANEROID BAROMETER CALIBRATION CHECK

| | |
|---|---|
| Location: | Kansas City, Missouri |
| Altitude Above Sea Level: | 850 feet |
| Latitude: | 39° 05.8' north |
| Meteorological Gravity: | 32.1551 feet/second² |
| Mercury Barometer Description: | Sargent Welch, Cat. S-4519, Lot 791802000 |

---

| | |
|---|---|
| MRI Project No. | 4951-04-03-01 |
| Date: | 2/18/99 |
| Time: | 11.38 |
| Readings Obtained By: | D. Neal D. Neal |
| Observed Barometer Reading: | 29.07 in. Hg |
| Mercury Column Temperature: | 68 °F |
| Correction For Temperature: | -0.10 in. Hg |
| Correction For Gravity: | -0.02 in. Hg |
| Corrected Barometric Pressure: | 28.95 in. Hg |

---

| | |
|---|---|
| Aneroid Barometer I.D. No.: | X-4029 |
| Reading Before Adjustment: | 28.94 in. Hg |
| Calibration Check Result: | within 0.1 in. Hg |
| Reading After Adjustment: | 28.95 in. Hg |

---

Remarks:

BAROMETR.WK4 10/19/98 (rev. BAROMETR.WK4 02/18/99 11:38 AM)

(PRETEST)

# ANEROID BAROMETER CALIBRATION CHECK

| | |
|---|---|
| Location: | Kansas City, Missouri |
| Altitude Above Sea Level: | 850 feet |
| Latitude: | 39° 05.8' north |
| Meteorological Gravity: | 32.1551 feet/second$^2$ |
| Mercury Barometer Description: | Sargent Welch, Cat. S-4519, Lot 791802000 |

---

| | | |
|---|---|---|
| MRI Project No. | 4951-03-04-01 | |
| Date: | 02/04/99 | |
| Time: | 0903 | |
| Readings Obtained By: | D. Neal | D. Neal |
| Observed Barometer Reading: | 29.57 | in. Hg |
| Mercury Column Temperature: | 73 | °F |
| Correction For Temperature: | -0.11 | in. Hg |
| Correction For Gravity: | -0.02 | in. Hg |
| Corrected Barometric Pressure: | 29.44 | in. Hg |

---

| | | |
|---|---|---|
| Aneroid Barometer I.D. No.: | X-4029 | |
| Reading Before Adjustment: | 29.44 | in. Hg |
| Calibration Check Result: | within 0.1 in. Hg | |
| Reading After Adjustment: | 29.44 | in. Hg |

---

Remarks:

# SAMPLING NOZZLE CALIBRATION CHECK DATA

MRI Project No. 4951.03.04.01
Client/Source: U.S. EPA OAQPS EMAD SCG / Chip Dryer and Reverberatory Furnace #1
Source Location: Steele, Alabama
Sampling Location: All locations

| Nozzle I.D. Number or Dedicated Sampling Train Number | Nozzle Type (Shape and Material of Construction) | Three Measured Diameters, inches D1 | D2 | D3 | Average Diameter, inches | Measured By | Date |
|---|---|---|---|---|---|---|---|
| IN-1 | quartz-gooseneck | 0.191 | 0.191 | 0.191 | 0.191 | [illegible] | 02/09/99 |
| OUT-1 | quartz-gooseneck | 0.233 | 0.234 | 0.234 | 0.234 | [illegible] | 02/09/99 |
| IN-2 | quartz-gooseneck | 0.191 | 0.191 | 0.191 | 0.191 | [illegible] | 02/09/99 |
| OUT-2 | quartz-gooseneck | 0.234 | 0.234 | 0.234 | 0.234 | [illegible] | 02/09/99 |
| IN-3 | quartz-gooseneck | 0.207 | 0.207 | 0.207 | 0.207 | [illegible] | 02/10/99 |
| IN-4 | quartz-gooseneck | 0.146 | 0.147 | 0.147 | 0.147 | [illegible] | 02/11/99 |
| OUT-3 | quartz-gooseneck | 0.147 | 0.147 | 0.146 | 0.147 | [illegible] | 02/11/99 |
| | | | | | | | |
| | | | | | | | |
| | | | | | | | |
| | | | | | | | |
| | | | | | | | |
| | | | | | | | |
| | | | | | | | |

COMMENTS: $D_L - D_S \leq 0.004$ in. where $D_L$ = Largest diameter measured per nozzle
$D_S$ = Smallest diameter measured per nozzle

# Appendix D

# Semivolatile Analysis Narrative Report

**Analysis Narrative**
4951-03-04-02
Semivolatiles

Analysis was conducted according to the Work Plan for this project. The Trio1-A GC/MS was used for analysis. LabBase was used for acquisition and processing of the samples

**Calibration curve.** All analytes and surrogates had %RSD less than 15 with one exception. 2,4,6-Tribromophenol had a % RSD of 16.

**Second Source Verification Standard.** A second source verification standard was analyzed after the initial calibration curve, but it had no IS solution in it. A reanalysis, after adding internal standard solution, was conducted the following day with criteria being met. All samples were analyzed after the passing second source standard was analyzed. The method blank and LCS were analyzed before the passing second source standard. SEE PAR.

**Continuing Calibrations.** CCALS were good for all analysis days.

**DFTPP** passed Method 8270C criteria using three scans each analysis day.

All **internal standards** met criteria of 50 - 200% recovery of the daily standard except for sample 2011/2012/2013. d12-Perylene was low in all analyses of this sample: 1:5, 1:25 and 1:125 dilutions. As the dilution increased, the % of internal standard area from the lowest acceptable area also increased: 10, 50, 91 respectively. A duplicate analysis was performed on the 1:5 dilution with similar results as the first one. Matrix is the suspected culprit for a low recovery. SEE PAR.

**Surrogate recoveries** were acceptable for all samples and QC samples per the QAPP except for 2-fluorobiphenyl. This surrogate was high in sample 2011/2012/2013— 124%, 135% for second analysis, upper limit is 115%. SEE PAR.

The analysis of the **method blank** indicated no contamination of targets.

One **LCS** sample was analyzed. Recoveries were acceptable per the QAPP.

Rachel Swaney 3/19/99

TABLE 1. DATA SUMMARY FOR SEMIVOLATILE ORGANICS IN UG

| | Chip Dryer Baghouse Inlet | | Chip Dryer Baghouse Outlet | | Furnace Baghouse Inlet | | Furnace Baghouse Outlet | |
|---|---|---|---|---|---|---|---|---|
| Run: | Run 1 | Run 2 | Run 1 | Run 2 | Run 1 | Run 2 | Run 1 | Run 2 |
| Sampled: | 2/9/99 | 2/9/99 | 2/9/99 | 2/9/99 | 2/11/99 | 2/12/99 | 2/11/99 | 2/12/99 |
| Acenaphthene | ND [1] | ND | ND | ND | ND | ND | 10.5 | ND |
| Acenaphthylene | 11.4 | ND | 9.61 | ND | 911 | 327 | 414 | 741 |
| Anthracene | ND | ND | ND | ND | 106 | 43.7 | 28.0 | ND |
| Benz(a)anthracene | ND | ND | ND | ND | 77.9 | 70.9 | ND | ND |
| Benzo(a)pyrene | ND | ND | ND | ND | 32.8 | ND [2] | ND | ND |
| Benzo(b)fluoranthene | ND | ND | ND | ND | 152 | 930 [2] | ND | ND |
| Benzo(g,h,i)perylene | ND | ND | ND | ND | 25.8 | 189 [2] | ND | ND |
| Benzo(k)fluoranthene | ND | ND | ND | ND | 31.8 | 202 [2] | ND | ND |
| 4-Bromophenyl-phenylether | ND | ND | ND | ND | ND | ND | ND | ND |
| 1-Chloronaphthalene | 16.3 | ND | 10.3 | 8.84 | ND | 29.0 | 8.17 | ND |
| Chrysene | ND | ND | ND | ND | 109 | 207 | ND | ND |
| Dibenzofuran | 64.6 | 39.6 | 40.3 | 24.5 | 165 | 279 | 128 | 173 |
| Dibenz(a,h)anthracene | ND | ND | ND | ND | ND | 95.1 [2] | ND | ND |
| Dibenzothiophene | 8.64 | 6.49 | ND | ND | 27.8 | 30.0 | 27 | ND |
| Fluoranthene | 12.2 | 7.53 | ND | ND | 316 | 685 | 193 | 59.2 |
| Fluorene | ND | ND | 12.0 | ND | 142 | 230 | 80 | 147 |
| Hexachlorobenzene | 13.7 | ND | ND | ND | ND | 27.7 | 26.6 | ND |
| Indeno(1,2,3-cd)pyrene | ND | ND | ND | ND | 36.0 | 327 [2] | ND | ND |
| Naphthalene | 687 | 180 | 471 | 275 | 3199 | 5148 | 1934 | 3671 |
| Phenanthrene | 49.5 | 28.5 | 34.1 | 23.6 | 776 | 1286 | 543 | 596 |
| Pyrene | ND | ND | ND | ND | 255 | 271 | 35.0 | ND |

[1] ND = Not detected, less than lowest calibration standard (5 ug)

[2] Internal Standard outside acceptable range on original and dilution analyses.

TABLE 2. INDIVIDUAL LABORATORY SURROGATE RECOVERIES FOR SEMIVOLATILES

| | Chip Dryer Baghouse Inlet | | Chip Dryer Baghouse Outlet | | Furnace Baghouse Inlet | | Furnace Baghouse Outlet | | Blank Train | Method Blank | LCS |
|---|---|---|---|---|---|---|---|---|---|---|---|
| Run: | Run 1 | Run 2 | Run 1 | Run 2 | Run 1 | Run 2 | Run 1 | Run 2 | NA | NA | NA |
| Sampled: | 2/9/99 | 2/9/99 | 2/9/99 | 2/9/99 | 2/11/99 | 2/12/99 | 2/11/99 | 2/12/99 | NA | NA | NA |
| 2-Fluorophenol | 75.3 | 78.1 | 74.9 | 79.1 | 71.1 | 65.1 | 69.8 | 72.6 | 68.5 | 69.1 | 64.4 |
| Phenol-d5 | 90.4 | 98.5 | 89.7 | 81.4 | 81.7 | 80.0 | 62.2 | 80.8 | 80.4 | 76.7 | 76.2 |
| 2-Chlorophenol-d4 | 83.7 | 87.5 | 88.9 | 88.5 | 96.6 | 93.1 | 59.6 | 91.2 | 75.7 | 75.6 | 72.0 |
| 1,2-Dichlorobenzene-d4 | 72.8 | 75.6 | 77.8 | 72.1 | 85.7 | 85.8 | 70.4 | 82.0 | 71.2 | 72.8 | 69.2 |
| Nitrobenzene-d5 | 77.3 | 73.9 | 108 | 99.2 | 91.2 | 118 | 119 | 108 | 81.6 | 76.3 | 73.3 |
| 2-Fluorobiphenyl | 87.8 | 92.7 | 93.9 | 91.2 | 106 | 124 | 89.7 | 103 | 82.9 | 83.2 | 81.8 |
| 2,4,6-Tribromophenol | 97.3 | 107 | 81.7 | 90.7 | 103 | 117 | 114 | 93.3 | 111 | 104 | 103 |
| Terphenyl-d14 | 88.0 | 94.2 | 90.1 | 92.5 | 103 | 126 | 87.6 | 109 | 90.1 | 87.4 | 95.2 |

[1] Recovery is outside of the DQO for PAH surrogates.

[2] NA = Not applicable.

# TABLE 3. INDIVIDUAL FIELD SURROGATE RECOVERIES FOR SEMIVOLATILES

| Sample No. | Location | Run | Date Sampled | Field surrogates, %R | |
|---|---|---|---|---|---|
| | | | | $d_{10}$-Fluoranthene | $d_{12}$-Benzo[a]pyrene |
| 1001-1003 | Chip Dryer Baghouse Inlet | 1 | 2/9/99 | 87.4 | 74.4 |
| 1006-1008 | Chip Dryer Baghouse Outlet | 1 | 2/9/99 | 97.2 | 85.2 |
| 2001-2003 | Chip Dryer Baghouse Inlet | 2 | 2/9/99 | 49.4 | 56.3 |
| 2006-2008 | Chip Dryer Baghouse Outlet | 2 | 2/9/99 | 93.8 | 90.4 |
| 1011-1013 | Furnace Baghouse Inlet | 1 | 2/11/99 | 96.9 | 107 |
| 1016-1018 | Furnace Baghouse Outlet | 1 | 2/11/99 | 128 | 93.6 |
| 2011-2013 | Furnace Baghouse Inlet | 2 | 2/12/99 | 97.2 | 59.3 |
| 2016-2018 | Furnace Baghouse Outlet | 2 | 2/12/99 | 101 | 89.0 |
| Sample average recovery | | | | 94.0 | 81.9 |
| Sample standard deviation | | | | 22 | 17 |
| 1026-1028 | Blank Train | NA [2] | 2/2/99 | 95.2 | 90.2 |
| MB | NA | NA | NA | 82.5 | 73.2 |
| LCS | NA | NA | NA | 91.5 | 93.7 |

Footnotes: Only those numbers indicated in table are applicable.

[1] Recovery is outside of the DQO for PAH surrogates

[2] NA = Not applicable.

TABLE 4. LABORATORY CONTROL SPIKE AND INDEPENDENT CHECK SAMPLE RECOVERIES FOR SEMIVOLATILES

| Analyte | LCS Spike Total µg | LCS Result Total µg | LCS Recovery %R | ICS Recovery %R |
|---|---|---|---|---|
| Acenaphthene | 25 | 23.4 | 93.6 | 103 |
| Acenaphthylene | 25 | 23.6 | 94.4 | 101 |
| Anthracene | 25 | 25.2 | 101 | 105 |
| Benz(a)anthracene | 25 | 26.0 | 104 | 99 |
| Benzo(a)pyrene | 25 | 25.5 | 102 | 102 |
| Benzo(b)fluoranthene | 25 | 26.2 | 105 | 103 |
| Benzo(g,h,i)perylene | 25 | 26.1 | 104 | 104 |
| Benzo(k)fluoranthene | 25 | 25.8 | 103 | 110 |
| 4-Bromophenyl-phenylether | 25 | 24.8 | 99.2 | 102 |
| 1-Chloronaphthalene | 25 | 21.8 | 87.2 | 104 |
| Chrysene | 25 | 26.4 | 106 | 101 |
| Dibenzofuran | 25 | 23.2 | 92.8 | 100 |
| Dibenz(a,h)anthracene | 25 | 26.8 | 107 | 104 |
| Dibenzothiophene | 25 | NS [1] | NA [2] | NA |
| Fluoranthene | 25 | 26.4 | 106 | 96 |
| Fluorene | 25 | 24.2 | 96.8 | 103 |
| Hexachlorobenzene | 25 | 25.3 | 101 | 98 |
| Indeno(1,2,3-cd)pyrene | 25 | 26.8 | 107 | 102 |
| Naphthalene | 25 | 20.9 | 83.6 | 100 |
| Phenanthrene | 25 | 25.1 | 100 | 102 |
| Pyrene | 25 | 26.1 | 104 | 101 |

[1] NS = Not spiked.

[2] NA = Not applicable.

TABLE 5. LABORATORY METHOD BLANK, AND BLANK TRAIN RESULTS FOR SEMIVOLATILES

| Analyte | Detection Limit [1] Total µg | Method Blank Total µg | Blank Train Total µg |
|---|---|---|---|
| Acenaphthene | 5 | ND [2] | ND |
| Acenaphthylene | 5 | ND | ND |
| Anthracene | 5 | ND | ND |
| Benz(a)anthracene | 5 | ND | ND |
| Benzo(a)pyrene | 5 | ND | ND |
| Benzo(b)fluoranthene | 5 | ND | ND |
| Benzo(g,h,i)perylene | 5 | ND | ND |
| Benzo(k)fluoranthene | 5 | ND | ND |
| 4-Bromophenyl-phenylether | 5 | ND | ND |
| 1-Chloronaphthalene | 5 | ND | ND |
| Chrysene | 5 | ND | ND |
| Dibenzofuran | 5 | ND | ND |
| Dibenz(a,h)anthracene | 5 | ND | ND |
| Dibenzothiophene | 5 | ND | ND |
| Fluoranthene | 5 | ND | ND |
| Fluorene | 5 | ND | ND |
| Hexachlorobenzene | 5 | ND | ND |
| Indeno(1,2,3-cd)pyrene | 5 | ND | ND |
| Naphthalene | 5 | ND | ND |
| Phenanthrene | 5 | ND | ND |
| Pyrene | 5 | ND | ND |

Footnotes Only those numbers indicated in table are applicable.

[1] Detection limit is the lowest calibration standard.

[2] ND = Not detected, less than the lowest calibration standard.

# Appendix E

# Process Data

09.10.6

# Dryer Report

Customer: Test #1 Lot: _____

Address: _____

Date Received: 2/9/99

Start: 10:15 Am 2-9

Finish: 1:45 Pm 2-9

Rec. Tkt. No.: _____

Bin No.: _____

## Analysis

| Ni | Ti | Cu | Sn | Si | Mn | Fe | Cr | Pb | Zn | Mg |
|---|---|---|---|---|---|---|---|---|---|---|
| | | | | | | | | | | |

High Grade [ ] Mixed [X] 2% Zinc [ ] Alloy _____

## Description

1) Chips [X] Curl [X] Solids [ ] Other _____

2) Cutting Fluid: Oil [X] Water Base [ ] Heavy Oil [ ]

3) Oxidized ? (Circle One) Yes No

4) Iron: None [ ] Light [ ] Heavy [X]

Other (Describe) _____

5) Other Contamination: Trash [ ] Floor Sweeps [ ]

Other (Describe) _____

Remarks Mixed co mat.

| | Results | | | Settle Weight |
|---|---|---|---|---|
| Gross Weight | 13,454 | Lbs. | | |
| Clean and Dry Weight | 8,429 | Lbs. | > | _____ Lbs. |
| Solids | | Lbs | > | _____ Lbs. |
| Recovery | | Lbs. | | |
| Iron | 1,460 | Lbs. | | |
| Fines | 1,720 | Lbs. | > | _____ Lbs. |
| Cyclone | 622 | Lbs. | | |
| Trash | | Lbs. | | |

8,429
1,460
1,720
622
12,231
10% + 1,223 Burn up
13,454

Scrap Dryer / Chip Dryer

Run # 1 2/9/99 Lime: 4 bags/day (50 lbs/bag)
Start Time: 10:15 am
End Time: 1:45 pm

Material Type: Mixed Borings and Turnings

| Kiln Temp. Read out | | Ductwork Temp. | | Baghouse Temp |
|---|---|---|---|---|
| 00:00 - 401 | | 471 | | 174 |
| 00:05 - 424 | | 451 | | 165 |
| 00:10 - 425 | | 442 | | 166 |
| 00:15 - 414 | | 437 | | 163 |
| 00:20 - 399 | | 447 | | 168 |
| 00:25 - 407 | | 448 | | 167 |
| 00:30 - 412 | | 441 | | 167 |
| 00:35 - 404 | | 435 | | 165 |
| 00:40 - 385 | | 446 | | 169 |
| 00:45 - 373 | | 481 | | 180 |
| 00:50 - 404 | | 494 | | 182 |
| 00:55 - 432 | | 462 | | 174 |
| 00:60 - 426 | | 447 | | 168 |
| 01:00 - 409 | | 435 | | 164 |
| 01:05 - 393 | | 468 | | 176 |
| 01:10 - 408 | | 464 | | 173 |
| 01:15 - 416 | | 447 | | 167 |
| 01:20 - 412 | | 437 | | 167 |
| 01:25 - 412 | PORT CHANGE 11:45am | 433 | PORT CHANGE 11:45am | 169 |
| 01:30 - 473 | BACK @ 12:15pm | 444 | BACK @ 12:15pm | 171 |
| 01:35 - 457 | | 436 | | 167 |
| 01:40 - 434 | | 433 | | 172 |
| 01:45 - 424 | | 427 | | 167 |
| 01:50 - 406 | | 420 | | 165 |
| 01:55 - 391 | | 469 | | 183 |
| 02:00 - 415 | | 448 | | 176 |
| 02:05 - 423 | | 434 | | 169 |
| 02:10 - 405 | | 426 | | 169 |
| 02:15 - 385 | | 461 | | 184 |

Run # 1 (cont.) 2/9/99

| | Kiln Temp | Duct Temp | BH Temp. |
|---|---|---|---|
| 02:20 | 392 | 475 | 183 |
| 02:25 | 413 | 452 | 175 |
| 02:30 | 419 | 445 | 175 |
| 02:35 | 418 | 440 | 172 |
| 02:40 | 417 | 437 | 174 |
| 02:45 | 418 | 431 | 168 |
| 02:50 | 406 | 424 | 169 |
| 02:55 | 389 | 434 | 170 |
| 03:00 | 388 | 460 | 179 |

END OF RUN # 1 1:45 pm

09.10.6

# Dryer Report

Customer: Test # 2 Lot: _____ Start: 3:45

Address: _____ Finish: 7:15

Rec. Tkt. No.: _____

Date Received: 2 / 9 / 99 Bin No.: _____

## Analysis

| Ni | Ti | Cu | Sn | Si | Mn | Fe | Cr | Pb | Zn | Mg |
|---|---|---|---|---|---|---|---|---|---|---|
| | | | | | | | | | | |

High Grade [ ] Mixed [ ] 2% Zinc [ ] Alloy _____

## Description

1) Chips [X] Curl [X] Solids [ ] Other _____

2) Cutting Fluid: Oil [X] Water Base [ ] Heavy Oil [ ]

3) Oxidized ? (Circle One) Yes (No)

4) Iron: None [ ] Light [X] Heavy [ ]

Other (Describe) _____

5) Other Contamination: Trash [ ] Floor Sweeps [ ]

Other (Describe) _____

Remarks Run from Commercial LOT # 38573 all one type material

| Results | | | | Settle Weight |
|---|---|---|---|---|
| Gross Weight | 10,472 | Lbs. | | |
| Clean and Dry Weight | ~~8,568~~ 8568 | Lbs. | > | _____ Lbs. |
| Solids | _____ | Lbs | > | _____ Lbs. |
| Recovery | _____ | Lbs. | | |
| Iron | 292 | Lbs. | | |
| Fines | 650 | Lbs. | > | _____ Lbs. |
| Cyclone | 10 | Lbs. | | |
| Trash | _____ | Lbs. | | |

8568
292
650
10
9,520
+ 952
10,472

Scrap Dryer / Chip Dryer

Run # 2 2/9/99

Start Time: 3:45 pm

End Time: 7:15 pm

Lime: 4 bags/day (50 lbs/bag)

Material Type:

| Time: | | Kiln Temp | | Duct Temp | BH Temp |
|---|---|---|---|---|---|
| 00:00 | | 420 | | 458 | 175 |
| 00:05 | | 423 | | 447 | 173 |
| 00:10 | | 410 | | 437 | 169 |
| 00:15 | | 397 | | 445 | 172 |
| 00:20 | | 397 | | 454 | 175 |
| 00:25 | | 397 | | 431 | 171 |
| 00:30 | | 386 | | 442 | 174 |
| 00:35 | | 377 | | 438 | 171 |
| 00:40 | | 368 | | 435 | 168 |
| 00:45 | | 358 | | 433 | 167 |
| 00:50 | | 352 | | 435 | 167 |
| 00:55 | | 350 | | 431 | 167 |
| 01:00 | | 351 | | 429 | 167 |
| 01:05 | | 352 | | 426 | 169 |
| 01:10 | | 349 | | 423 | 164 |
| 01:15 | | 343 | | 423 | 165 |
| 01:20 | | 339 | | 422 | 164 |
| 01:25 | | 338 | | 422 | 166 |
| 01:30 | PORT CHANGE 5:15 pm | 337 | PORT CHANGE 5:15 pm | 421 | 163 |
| 01:35 | START BACK @ 5:45 pm | 325 | | 424 | 162 |
| 01:40 | | 326 | | 423 | 162 |
| 01:45 | | 322 | | 423 | 162 |
| 01:50 | | 319 | | 420 | 163 |
| 01:55 | | 314 | | 420 | 162 |
| 02:00 | | 310 | | 420 | 163 |
| 02:05 | | 307 | | 420 | 160 |
| 02:10 | | 304 | | 423 | 161 |
| 02:15 | | 311 | | 420 | 161 |
| 02:20 | | 317 | | 419 | 160 |
| 02:25 | | 316 | | 416 | 159 |

Run #2 (continued) 2/9/99

| Time | Kiln Temp | Duct Temp | BH Temp |
|---|---|---|---|
| 02:30 | 309 | 416 | 159 |
| 02:35 | 303 | 417 | 162 |
| 02:40 | 300 | 418 | 158 |
| 02:45 | 301 | 419 | 160 |
| 02:50 | 307 | 419 | 158 |
| 02:55 | 314 | 420 | 159 |
| 03:00 | 319 | 420 | 158 |
| 03:05 | 322 | 420 | 157 |

END OF RUN #2
7:15 pm

HONEYWELL
Truline
FT WASHINGTON, PA U S A
0 TO 600 DEC F
07:26
10:26
13:26
16:26
19:26
22:26
01:26
04:26

| TIME & DATE | WEIGHT | ID NO. | SEQUENCE NO. |
|---|---|---|---|
| 09 FEB 99 10:44 PM | 205 LB | 000TEST | 1 |
| 09 FEB 99 10:52 PM | 203 LB | 000TEST | 2 |
| 09 FEB 99 11:01 PM | 204 LB | 000TEST | 3 |
| 09 FEB 99 11:10 PM | 203 LB | 000TEST | 4 |
| 09 FEB 99 11:20 PM | 206 LB | 000TEST | 5 |
| 09 FEB 99 11:29 PM | 203 LB | 000TEST | 6 |
| 09 FEB 99 11:38 PM | 206 LB | 000TEST | 7 |
| 09 FEB 99 11:48 PM | 204 LB | 000TEST | 8 |
| 09 FEB 99 11:58 PM | 204 LB | 000TEST | 9 |
| 10 FEB 99 12:08 AM | 204 LB | 000TEST | 10 |
| 10 FEB 99 12:19 AM | 205 LB | 000TEST | 11 |
| 10 FEB 99 12:30 AM | 203 LB | 000TEST | 12 |
| 10 FEB 99 12:41 AM | 206 LB | 000TEST | 13 |
| 10 FEB 99 12:51 AM | 204 LB | 000TEST | 14 |
| 10 FEB 99 01:02 AM | 201 LB | 000TEST | 15 |
| 10 FEB 99 01:14 AM | 203 LB | 000TEST | 16 |
| 10 FEB 99 01:25 AM | 204 LB | 000TEST | 17 |
| 10 FEB 99 01:36 AM | 204 LB | 000TEST | 18 |
| 10 FEB 99 01:46 AM | 204 LB | 000TEST | 19 |
| 10 FEB 99 01:57 AM | 203 LB | 000TEST | 20 |
| 10 FEB 99 02:09 AM | 205 LB | 000TEST | 21 |

| TIME & DATE | TOTAL WEIGHT | ID NO. | TOTAL WEIGHMENTS |
|---|---|---|---|
| 10 FEB 99 02:11 AM | 4284 LB | 000TEST | 21 |

| TIME & DATE | WEIGHT | ID NO. | SEQUENCE NO. |
|---|---|---|---|
| 10 FEB 99 03:16 AM | 202 LB | 000TEST | 1 |
| 10 FEB 99 03:24 AM | 203 LB | 000TEST | 2 |
| 10 FEB 99 03:33 AM | 203 LB | 000TEST | 3 |
| 10 FEB 99 03:43 AM | 205 LB | 000TEST | 4 |
| 10 FEB 99 03:52 AM | 203 LB | 000TEST | 5 |
| 10 FEB 99 04:01 AM | 202 LB | 000TEST | 6 |
| 10 FEB 99 04:10 AM | 206 LB | 000TEST | 7 |
| 10 FEB 99 04:20 AM | 204 LB | 000TEST | 8 |
| 10 FEB 99 04:31 AM | 205 LB | 000TEST | 9 |
| 10 FEB 99 04:41 AM | 203 LB | 000TEST | 10 |
| 10 FEB 99 04:52 AM | 204 LB | 000TEST | 11 |
| 10 FEB 99 05:03 AM | 203 LB | 000TEST | 12 |
| 10 FEB 99 05:14 AM | 204 LB | 000TEST | 13 |
| 10 FEB 99 05:24 AM | 204 LB | 000TEST | 14 |
| 10 FEB 99 05:36 AM | 204 LB | 000TEST | 15 |
| 10 FEB 99 05:48 AM | 203 LB | 000TEST | 16 |
| 10 FEB 99 05:58 AM | 203 LB | 000TEST | 17 |
| 10 FEB 99 06:09 AM | 203 LB | 000TEST | 18 |
| 10 FEB 99 06:19 AM | 202 LB | 000TEST | 19 |
| 10 FEB 99 06:30 AM | 204 LB | 000TEST | 20 |
| 10 FEB 99 06:38 AM | 75 LB | 000TEST | 21 |
| TIME & DATE | TOTAL WEIGHT | ID NO. | TOTAL WEIGHMENTS |
| 10 FEB 99 06:38 AM | 4145 LB | 000TEST | 21 |

| TIME & DATE | WEIGHT | ID NO. | SEQUENCE NO. |
|---|---|---|---|
| 10 FEB 99 04:10 AM | 2 LB | TEST 2 | 1 |
| 10 FEB 99 04:17 AM | 205 LB | TEST 2 | 2 |
| 10 FEB 99 04:28 AM | 203 LB | TEST 2 | 3 |
| 10 FEB 99 04:37 AM | 203 LB | TEST 2 | 4 |
| 10 FEB 99 04:46 AM | 203 LB | TEST 2 | 5 |
| 10 FEB 99 04:55 AM | 204 LB | TEST 2 | 6 |
| 10 FEB 99 05:04 AM | 204 LB | TEST 2 | 7 |
| 10 FEB 99 05:13 AM | 203 LB | TEST 2 | 8 |
| 10 FEB 99 05:22 AM | 204 LB | TEST 2 | 9 |
| 10 FEB 99 05:31 AM | 203 LB | TEST 2 | 10 |
| 10 FEB 99 05:41 AM | 204 LB | TEST 2 | 11 |
| 10 FEB 99 05:50 AM | 204 LB | TEST 2 | 12 |
| 10 FEB 99 06:01 AM | 204 LB | TEST 2 | 13 |
| 10 FEB 99 06:12 AM | 204 LB | TEST 2 | 14 |
| 10 FEB 99 06:20 AM | 204 LB | TEST 2 | 15 |
| 10 FEB 99 06:30 AM | 203 LB | TEST 2 | 16 |
| 10 FEB 99 06:40 AM | 205 LB | TEST 2 | 17 |
| 10 FEB 99 06:52 AM | 203 LB | TEST 2 | 18 |
| 10 FEB 99 07:02 AM | 205 LB | TEST 2 | 19 |
| 10 FEB 99 07:12 AM | 204 LB | TEST 2 | 20 |
| 10 FEB 99 07:23 AM | 204 LB | TEST 2 | 21 |
| 10 FEB 99 07:33 AM | 206 LB | TEST 2 | 22 |
| TIME & DATE | TOTAL WEIGHT | ID NO. | TOTAL WEIGHMENTS |
| 10 FEB 99 07:40 AM | 4284 LB | TEST 2 | 22 |

# CULP ALUMINUM ALLOYS

## PRODUCTION REPORT - DETAIL MATERIAL CHARGED

| | | | Melt Started | Melt Stopped |
|---|---|---|---|---|
| Melt Number | 99A05400 | | 11:15 | 23:45 |
| Product Number | 862201 | A384 1 Sec Alum Ingot | 02-11-1999 | 02-11-1999 |
| Furnace Number | 1 | | mackeyr | washburnw |

| Material Number | Gross Weight | Tare Weight | Net Weight | Charge Date | Charge Time | Clock Number | Shift |
|---|---|---|---|---|---|---|---|
| 70150221 | 19,380 | 18,660 | 720 | 02/11/1999 | 11:25:12 | 02199 | 1 |
| 70150221 | 20,000 | 18,660 | 1,340 | 02/11/1999 | 11:27:17 | 02199 | 1 |
| 70150221 | 20,100 | 18,660 | 1,440 | 02/11/1999 | 11:29:16 | 02199 | 1 |
| 70150221 | 19,780 | 18,660 | 1,120 | 02/11/1999 | 11:31:20 | 02199 | 1 |
| 70150221 | 19,780 | 18,660 | 1,120 | 02/11/1999 | 11:34:59 | 02199 | 1 |
| 70150221 | 19,880 | 18,660 | 1,220 | 02/11/1999 | 11:38:25 | 02199 | 1 |
| 70150221 | 19,580 | 18,660 | 920 | 02/11/1999 | 11:40:12 | 02199 | 1 |
| 70150217 | 19,960 | 18,660 | 1,300 | 02/11/1999 | 11:42:26 | 02199 | 1 |
| 70150230 | 19,600 | 18,660 | 940 | 02/11/1999 | 11:44:16 | 02199 | 1 |
| 70150221 | 19,860 | 18,660 | 1,200 | 02/11/1999 | 11:45:56 | 02199 | 1 |
| 70150221 | 19,420 | 18,660 | 760 | 02/11/1999 | 11:47:50 | 02199 | 1 |
| 70150221 | 19,860 | 18,660 | 1,200 | 02/11/1999 | 11:51:11 | 02199 | 1 |
| 70150230 | 20,040 | 18,660 | 1,380 | 02/11/1999 | 11:53:50 | 02199 | 1 |
| 70150230 | 20,180 | 18,660 | 1,520 | 02/11/1999 | 11:56:53 | 02199 | 1 |
| 70150221 | 20,040 | 18,660 | 1,380 | 02/11/1999 | 11:59:54 | 02199 | 1 |
| 70150217 | 20,040 | 18,660 | 1,380 | 02/11/1999 | 12:03:10 | 02199 | 1 |
| 70150217 | 20,020 | 18,660 | 1,360 | 02/11/1999 | 12:06.13 | 02199 | 1 |
| 70150217 | 20,220 | 18,660 | 1,560 | 02/11/1999 | 12:10.42 | 02199 | 1 |
| 70150221 | 19,940 | 18,660 | 1,280 | 02/11/1999 | 12:15:01 | 02199 | 1 |
| 70150217 | 19,720 | 18,660 | 1,060 | 02/11/1999 | 12:18:38 | 02199 | 1 |
| 70150230 | 19,660 | 18,660 | 1,000 | 02/11/1999 | 12:22:36 | 02199 | 1 |
| 70150221 | 20,320 | 18,660 | 1,660 | 02/11/1999 | 12:26:34 | 02199 | 1 |
| 70150221 | 19,320 | 18,660 | 660 | 02/11/1999 | 12:31:15 | 02199 | 1 |
| 70150230 | 19,960 | 18,660 | 1,300 | 02/11/1999 | 12:35:32 | 02199 | 1 |
| 70150221 | 20,020 | 18,660 | 1,360 | 02/11/1999 | 12:46:02 | 02199 | 1 |
| 70150221 | 20,280 | 18,660 | 1,620 | 02/11/1999 | 12:53:44 | 02199 | 1 |
| 70160501 | 23,100 | 18,660 | 4,440 | 02/11/1999 | 13:18.55 | 02199 | 1 |
| 70150230 | 19,560 | 18,660 | 900 | 02/11/1999 | 13:19:16 | 02199 | 1 |
| 70150221 | 20,260 | 18,660 | 1,600 | 02/11/1999 | 13:26:21 | 02199 | 1 |
| 70150221 | 19,580 | 18,660 | 920 | 02/11/1999 | 13:29:59 | 02199 | 1 |
| 70150221 | 19,840 | 18,660 | 1,180 | 02/11/1999 | 13:35:11 | 02199 | 1 |
| 70150221 | 20,000 | 18,660 | 1,340 | 02/11/1999 | 13:38:04 | 02199 | 1 |
| 70150230 | 20,000 | 18,660 | 1,340 | 02/11/1999 | 13:43:42 | 02199 | 1 |
| 70150221 | 19,940 | 18,660 | 1,280 | 02/11/1999 | 13:48:40 | 02199 | 1 |
| 70150221 | 19,940 | 18,660 | 1,280 | 02/11/1999 | 13:52:24 | 02199 | 1 |
| 70150230 | 20,120 | 18,660 | 1,460 | 02/11/1999 | 13:57:24 | 02199 | 1 |
| 70150230 | 19,980 | 18,660 | 1,320 | 02/11/1999 | 14:01:26 | 02199 | 1 |
| 70150230 | 20,040 | 18,660 | 1,380 | 02/11/1999 | 14:05:25 | 02199 | 1 |
| 70150221 | 20,100 | 18,660 | 1,440 | 02/11/1999 | 14:10:22 | 02199 | 1 |
| 70150230 | 20,040 | 18,660 | 1,380 | 02/11/1999 | 14:14:41 | 02199 | 1 |
| 70150221 | 19,980 | 18,660 | 1,320 | 02/11/1999 | 14:18:27 | 02199 | 1 |
| 70150230 | 19,980 | 18,660 | 1,320 | 02/11/1999 | 14:21:24 | 02199 | 1 |
| 70150221 | 20,080 | 18,660 | 1,420 | 02/11/1999 | 14:26:10 | 02199 | 1 |
| 70150221 | 20,040 | 18,660 | 1,380 | 02/11/1999 | 14:30:03 | 02199 | 1 |
| 70150230 | 20,120 | 18,660 | 1,460 | 02/11/1999 | 14:35:29 | 02199 | 1 |
| 70150217 | 19,880 | 18,660 | 1,220 | 02/11/1999 | 14:40:57 | 02199 | 1 |
| 70160501 | 22,260 | 18,660 | 3,600 | 02/11/1999 | 15:13:49 | 02145 | 2 |
| 70150221 | 19,400 | 18,660 | 740 | 02/11/1999 | 15:17:33 | 02145 | 2 |
| 70150221 | 19,460 | 18,660 | 800 | 02/11/1999 | 15:19:40 | 02145 | 2 |
| 70150221 | 19,440 | 18,660 | 780 | 02/11/1999 | 15:21:54 | 02145 | 2 |

# CULP ALUMINUM ALLOYS

## PRODUCTION REPORT - DETAIL MATERIAL CHARGED

| | | | Melt Started | Melt Stopped |
|---|---|---|---|---|
| Melt Number | 99A05400 | | 11:15 | 23:45 |
| Product Number | 862201 | A384.1 Sec Alum Ingot | 02-11-1999 | 02-11-1999 |
| Furnace Number | 1 | | mackeyr | washburnw |

| Material Number | Gross Weight | Tare Weight | Net Weight | Charge Date | Charge Time | Clock Number | Shift |
|---|---|---|---|---|---|---|---|
| 70150221 | 19.440 | 18.660 | 780 | 02/11/1999 | 15:24:09 | 02145 | 2 |
| 70150221 | 19.640 | 18.660 | 980 | 02/11/1999 | 15:27:47 | 02145 | 2 |
| 70150221 | 19.500 | 18,660 | 840 | 02/11/1999 | 15:31.44 | 02145 | 2 |
| 70150219 | 19.380 | 18.660 | 720 | 02/11/1999 | 15:37:12 | 02145 | 2 |
| 70150219 | 20.040 | 18.660 | 1,380 | 02/11/1999 | 15:39:54 | 02145 | 2 |
| 70150221 | 19.500 | 18.660 | 840 | 02/11/1999 | 15:44:22 | 02145 | 2 |
| 70150221 | 19.540 | 18.660 | 880 | 02/11/1999 | 15:46:31 | 02145 | 2 |
| 70160301 | 20.620 | 18.660 | 1,960 | 02/11/1999 | 15.51·06 | 02145 | 2 |
| 70150221 | 19.460 | 18.660 | 800 | 02/11/1999 | 15:58:50 | 02145 | 2 |
| 70150221 | 19.420 | 18.660 | 760 | 02/11/1999 | 16:01.28 | 02145 | 2 |
| 70150221 | 19.400 | 18.660 | 740 | 02/11/1999 | 16:03.47 | 02145 | 2 |
| 70150221 | 19.380 | 18.660 | 720 | 02/11/1999 | 16.06.34 | 02145 | 2 |
| 70150221 | 19.300 | 18.660 | 640 | 02/11/1999 | 16:09:31 | 02145 | 2 |
| 70150219 | 19.460 | 18.660 | 800 | 02/11/1999 | 16.11·38 | 02145 | 2 |
| 70150221 | 19.580 | 18.660 | 920 | 02/11/1999 | 16·14.28 | 02145 | 2 |
| 70150221 | 19.420 | 18.660 | 760 | 02/11/1999 | 16:18:31 | 02145 | 2 |
| 70160301 | 20.400 | 18.660 | 1,740 | 02/11/1999 | 16:20·32 | 02145 | 2 |
| 70150221 | 19.500 | 18.660 | 840 | 02/11/1999 | 16:25:19 | 02145 | 2 |
| 70150221 | 19.500 | 18.660 | 840 | 02/11/1999 | 16·27·48 | 02145 | 2 |
| 70150221 | 19.500 | 18.660 | 840 | 02/11/1999 | 16:30:02 | 02145 | 2 |
| 70150221 | 19.380 | 18.660 | 720 | 02/11/1999 | 16:32·34 | 02145 | 2 |
| 70150217 | 21.420 | 18.660 | 2,760 | 02/11/1999 | 16:35:51 | 02145 | 2 |
| 70160301 | 20.080 | 18.660 | 1,420 | 02/11/1999 | 16:42:18 | 02145 | 2 |
| 70150221 | 19.440 | 18.660 | 780 | 02/11/1999 | 16.46:30 | 02145 | 2 |
| 70150221 | 19.460 | 18.660 | 800 | 02/11/1999 | 16:49:12 | 02145 | 2 |
| 70150221 | 19.480 | 18.660 | 820 | 02/11/1999 | 16:52·17 | 02145 | 2 |
| 70160501 | 22.000 | 18.660 | 3,340 | 02/11/1999 | 17:30·10 | 02145 | 2 |
| 70150221 | 19.440 | 18.660 | 780 | 02/11/1999 | 17.38:18 | 02145 | 2 |
| 70160301 | 20.120 | 18.660 | 1,460 | 02/11/1999 | 18:01.23 | 02145 | 2 |
| 70150221 | 19.440 | 18.660 | 780 | 02/11/1999 | 18:03:51 | 02145 | 2 |
| 70150221 | 19.480 | 18.660 | 820 | 02/11/1999 | 18·05:49 | 02145 | 2 |
| 70150221 | 19.380 | 18.660 | 720 | 02/11/1999 | 18:07:53 | 02145 | 2 |
| 70150221 | 19.960 | 18.660 | 1.300 | 02/11/1999 | 18:10:25 | 02145 | 2 |
| 70150217 | 19.920 | 18.660 | 1,260 | 02/11/1999 | 18.19:50 | 02145 | 2 |
| 70150221 | 19.480 | 18.660 | 820 | 02/11/1999 | 18:22:35 | 02145 | 2 |
| 70150221 | 19.420 | 18.660 | 760 | 02/11/1999 | 18:26:41 | 02145 | 2 |
| 70150219 | 19,620 | 18.660 | 960 | 02/11/1999 | 18:29·38 | 02145 | 2 |
| 70150219 | 19,500 | 18.660 | 840 | 02/11/1999 | 18:32:53 | 02145 | 2 |
| 70150219 | 19.520 | 18.660 | 860 | 02/11/1999 | 18:35:26 | 02145 | 2 |
| 70150221 | 19,940 | 18.660 | 1,280 | 02/11/1999 | 18:38:13 | 02145 | 2 |
| 70160501 | 19,920 | 18.660 | 1,260 | 02/11/1999 | 18:50:39 | 02145 | 2 |
| 70150219 | 19,460 | 18.660 | 800 | 02/11/1999 | 18.54:22 | 02145 | 2 |
| 70150219 | 19,640 | 18.660 | 980 | 02/11/1999 | 18:57:15 | 02145 | 2 |
| 70150221 | 19,760 | 18.660 | 1,100 | 02/11/1999 | 19:01:41 | 02145 | 2 |
| 70150221 | 19,640 | 18.660 | 980 | 02/11/1999 | 19:04:19 | 02145 | 2 |
| 70150221 | 19,760 | 18.660 | 1,100 | 02/11/1999 | 19:07:03 | 02145 | 2 |
| 70150221 | 19,380 | 18.660 | 720 | 02/11/1999 | 19:10:07 | 02145 | 2 |
| 70150221 | 19,360 | 18.660 | 700 | 02/11/1999 | 19:12:19 | 02145 | 2 |
| 70150221 | 19,500 | 18.660 | 840 | 02/11/1999 | 19:14:51 | 02145 | 2 |
| 70150221 | 19,480 | 18.660 | 820 | 02/11/1999 | 19:17:26 | 02145 | 2 |

# CULP ALUMINUM ALLOYS

## PRODUCTION REPORT - DETAIL MATERIAL CHARGED

| | | | Melt Started | Melt Stopped |
|---|---|---|---|---|
| **Melt Number** | 99A05400 | | 11:15 | 23.45 |
| **Product Number** | 862201 | A384 1 Sec Alum Ingot | 02-11-1999 | 02-11-1999 |
| **Furnace Number** | 1 | | mackeyr | washburnw |

| Material Number | Gross Weight | Tare Weight | Net Weight | Charge Date | Charge Time | Clock Number | Shift |
|---|---|---|---|---|---|---|---|
| 70150221 | 19.380 | 18.660 | 720 | 02/11 1999 | 19:20:08 | 02145 | 2 |
| 70160301 | 19.600 | 18,660 | 940 | 02/11 1999 | 19:22 26 | 02145 | 2 |
| 70150221 | 19.600 | 18.660 | 940 | 02/11 1999 | 19:25:19 | 02145 | 2 |
| 70150221 | 19.520 | 18,660 | 860 | 02/11 1999 | 19:28·19 | 02145 | 2 |
| 70150221 | 19.540 | 18,660 | 880 | 02/11 1999 | 19.31:11 | 02145 | 2 |
| 70150221 | 19.540 | 18,660 | 880 | 02/11 1999 | 19:33·47 | 02145 | 2 |
| | 2,101.640 | 1,977,960 | 123,680 | | | | |

# CULP ALUMINUM ALLOYS

PRODUCTION REPORT - DETAIL PRODUCTION/DOWNTIME HOURS REPORTED

| | | | Melt Started | Melt Stopped |
|---|---|---|---|---|
| **Melt Number** | 99A05400 | | 11.15 | 23:45 |
| **Product Number** | 862201 | A384 1 Sec Alum Ingot | 02-11-1999 | 02-11-1999 |
| **Furnace Number** | 1 | | mackeyr | washburnw |
| **Bundles Produced** | 56 | | | |
| **Charge Weight** | 123,680 | | | |

| Operation Code | Description | Total Cycle Time (100 ths) | Production Hours (100 ths) |
|---|---|---|---|
| 22CT001 | CYCLETIME REVERB F#1 | 12.50 | |
| 22CT1AL | ALLOY TIME FURN.#1 | | 0.25 |
| 22CT1CG | CHARGE TIME FURN.#1 | | 7 50 |
| 22CT1CO | CLEAN OFF FURN.#1 | | 1.25 |
| 22CT1TP | TAP TIME FURN.#1 | | 3 50 |
| | **Total Hours** | 12.50 | 12.50 |

4 bags / 8 hrs

SIDE-WELL FURNACE PROCESS DATA

RUN #: 1

DATE: 2/11/99

START TIME: 11:19 am (cycle started) (11:30 am sampling)

END TIME: 11:45 pm

LIME INJECTION RATE: 25 lbs/hr

CHLORINE INJ. RATE @ 72°F 20.0 psig

| TIME | CL2 INJ. RATE (lb/hr) | BH TEMP 1 °F | BH TEMP 2 °F |
|---|---|---|---|
| 00:00 | 60 | 134 | 145 |
| 00:20 | 60 | 164 | 145 |
| 00:40 | 60 | 170 | 138 |
| 01:00 | 60 | 165 | 139 |
| 01:20 | 60 | 161 | 144 |
| 01:40 | 60 | 126 | 107 |
| 02:00 | 60 | 110 | 112 |
| 02:20 | 60 | 169 | 173 |
| 02:40 | 90 | 201 | 187 |
| 03:00 LEAK CHECK 2:00pm - 2:15pm | 110 | 222 | 197 |
| 03:20 | 100 | 178 | 143 |
| 03:40 | 90 | 123 | 111 |
| 04:00 | 80 | 135 | 145 |
| 04:20 | 70 | 132 | 141 |
| 04:40 | 60 | 157 | 159 |
| 05:00 | 50 | 158 | 155 |
| 05:20 | 60 | 195 | 185 |
| 05:40 PORT CHANGE 4:45pm | 210 | 127 | 110 |
| 06:00 | 135 | 126 | 133 |
| 06:20 | 135 | 107 | 122 |
| 06:40 | ~~135~~ 125 | ~~129~~ 155 | 169 |
| 07:00 | 65 | 213 | 216 |
| 07:20 | 55 | 116 | 98 |
| 07:40 | 55 | 133 | 125 |
| 08:00 | 55 | 159 | 134 |
| 08:20 LEAK CHECK 7:48pm | 55 | 112 | 97 |
| 08:40 | 55 | 101 | 113 |
| 09:00 TAPPING START 8:17pm | 55 | 98 | 120 |
| 09:20 | 55 | 101 | 125 |
| 09:40 | 55 | 101 | 126 |
| 10:00 | 55 | 101 | 125 |
| 10:20 | 55 | 101 | 127 |
| 10:40 | 55 | 99 | 126 |

SIDE-WELL FURNACE

RUN #: 1

DATE: 2/11/99

START TIME: 11:19 am (cycle); 11:30 am run

END TIME: 11:45 pm

LIME INJ. RATE: 25 lbs/hr avg.

$CL_2$ INJ. RATE @ 72°F 20.0 psig

| TIME | $CL_2$ INJ. RATE | BH TEMP 1 °F | BH TEMP2 °F |
|---|---|---|---|
| 1:00 | 55 | 99 | 127 |
| 1:20 | 55 | 98 | 127 |
| 1:40 | 55 | 100 | 129 |
| 2:00 | 55 | 100 | 128 |
| 2:20 | 55 | 99 | 127 |
| 2:40 | End of run 11:45 pm | | |
| 3:00 | | | |

# CULP ALUMINUM ALLOYS

## PRODUCTION REPORT - DETAIL MATERIAL CHARGED

| | | | Melt Started | Melt Stopped |
|---|---|---|---|---|
| Melt Number | 99A05600 | | 10 00 | 23 00 |
| Product Number | 862201 | A384 1 Sec Alum Ingot | 02-12-1999 | 02-12-1999 |
| Furnace Number | 1 | | mackeyr | washburnw |

| Material Number | Gross Weight | Tare Weight | Net Weight | Charge Date | Charge Time | Clock Number | Shift |
|---|---|---|---|---|---|---|---|
| 70150221 | 19,540 | 18,660 | 880 | 02/12/1999 | 10:10:20 | 02199 | 1 |
| 70150221 | 19,540 | 18,660 | 880 | 02/12/1999 | 10:11:58 | 02199 | 1 |
| 70150221 | 19,500 | 18,660 | 840 | 02/12/1999 | 10:13:54 | 02199 | 1 |
| 70150221 | 19,460 | 18,660 | 800 | 02/12/1999 | 10:16:00 | 02199 | 1 |
| 70150221 | 19,480 | 18,660 | 820 | 02/12/1999 | 10:17:38 | 02199 | 1 |
| 70150217 | 19,600 | 18,660 | 940 | 02/12/1999 | 10.19:02 | 02199 | 1 |
| 70150221 | 19,400 | 18,660 | 740 | 02/12/1999 | 10:21.05 | 02199 | 1 |
| 70150221 | 19,500 | 18,660 | 840 | 02/12/1999 | 10:22:45 | 02199 | 1 |
| 70150230 | 20,200 | 18,660 | 1,540 | 02/12/1999 | 10:27:11 | 02199 | 1 |
| 70150221 | 19,420 | 18,660 | 760 | 02/12/1999 | 10:29:32 | 02199 | 1 |
| 70150230 | 19,700 | 18,660 | 1,040 | 02/12/1999 | 10:35:15 | 02199 | 1 |
| 70150222 | 19,500 | 18,660 | 840 | 02/12/1999 | 10:37:52 | 02199 | 1 |
| 70150221 | 19,360 | 18,660 | 700 | 02/12/1999 | 10:41:47 | 02199 | 1 |
| 70150217 | 19,560 | 18,660 | 900 | 02/12/1999 | 10:44:04 | 02199 | 1 |
| 70150230 | 19,460 | 18,660 | 800 | 02/12/1999 | 10:46 18 | 02199 | 1 |
| 70150217 | 19,440 | 18,660 | 780 | 02/12/1999 | 10.49:27 | 02199 | 1 |
| 70150230 | 19,560 | 18,660 | 900 | 02/12/1999 | 10:52.12 | 02199 | 1 |
| 70150221 | 19,520 | 18,660 | 860 | 02/12/1999 | 10:55 03 | 02199 | 1 |
| 70150230 | 19,440 | 18,660 | 780 | 02/12/1999 | 10:58.02 | 02199 | 1 |
| 70150221 | 19,560 | 18,660 | 900 | 02/12/1999 | 11:01 01 | 02199 | 1 |
| 70150230 | 19,460 | 18,660 | 800 | 02/12/1999 | 11:03.27 | 02199 | 1 |
| 70150230 | 19,520 | 18,660 | 860 | 02/12/1999 | 11:05.59 | 02199 | 1 |
| 70150221 | 19,440 | 18,660 | 780 | 02/12/1999 | 11:11:40 | 02199 | 1 |
| 70150217 | 19,460 | 18,660 | 800 | 02/12/1999 | 11:15:05 | 02199 | 1 |
| 70150221 | 19,420 | 18,660 | 760 | 02/12/1999 | 11:18.03 | 02199 | 1 |
| 70150217 | 19,480 | 18,660 | 820 | 02/12/1999 | 11.20:56 | 02199 | 1 |
| 70150217 | 19,520 | 18,660 | 860 | 02/12/1999 | 11:23:37 | 02199 | 1 |
| 70150221 | 19,520 | 18,660 | 860 | 02/12/1999 | 11:26.30 | 02199 | 1 |
| 70150221 | 19,520 | 18,660 | 860 | 02/12/1999 | 11:29 44 | 02199 | 1 |
| 70150217 | 19,460 | 18,660 | 800 | 02/12/1999 | 11:32.30 | 02199 | 1 |
| 70150217 | 19,380 | 18,660 | 720 | 02/12/1999 | 11:36:27 | 02199 | 1 |
| 70150217 | 19,500 | 18,660 | 840 | 02/12/1999 | 11:39.39 | 02199 | 1 |
| 70150221 | 19,540 | 18,660 | 880 | 02/12/1999 | 11:42 49 | 02199 | 1 |
| 70150221 | 19,380 | 18,660 | 720 | 02/12/1999 | 11:45:39 | 02199 | 1 |
| 70150221 | 19,340 | 18,660 | 680 | 02/12/1999 | 11:49:07 | 02199 | 1 |
| 70150230 | 19,440 | 18,660 | 780 | 02/12/1999 | 11:52.06 | 02199 | 1 |
| 70150221 | 19,420 | 18,660 | 760 | 02/12/1999 | 11:55:01 | 02199 | 1 |
| 70150221 | 19,600 | 18,660 | 940 | 02/12/1999 | 11:58:25 | 02199 | 1 |
| 70150230 | 19,600 | 18,660 | 940 | 02/12/1999 | 12:01:41 | 02199 | 1 |
| 70160302 | 20,040 | 18,660 | 1,380 | 02/12/1999 | 12:08:27 | 02199 | 1 |
| 70160501 | 22,840 | 18,660 | 4,180 | 02/12/1999 | 12:31:42 | 02199 | 1 |
| 70160501 | 20,640 | 18,660 | 1,980 | 02/12/1999 | 12:35:46 | 02199 | 1 |
| 70150221 | 19,700 | 18,660 | 1,040 | 02/12/1999 | 12:40:17 | 02199 | 1 |
| 70150221 | 19,500 | 18,660 | 840 | 02/12/1999 | 12:44:39 | 02199 | 1 |
| 70150221 | 19,480 | 18,660 | 820 | 02/12/1999 | 12:48:26 | 02199 | 1 |
| 70150221 | 19,480 | 18,660 | 820 | 02/12/1999 | 12:51:04 | 02199 | 1 |
| 70150221 | 19,520 | 18,660 | 860 | 02/12/1999 | 12:54:12 | 02199 | 1 |
| 70150221 | 19,500 | 18,660 | 840 | 02/12/1999 | 12:57:01 | 02199 | 1 |
| 70150221 | 19,420 | 18,660 | 760 | 02/12/1999 | 12:59:29 | 02199 | 1 |
| 70150221 | 19,500 | 18,660 | 840 | 02/12/1999 | 13:02:44 | 02199 | 1 |

# CULP ALUMINUM ALLOYS

## PRODUCTION REPORT - DETAIL MATERIAL CHARGED

| | | | Melt Started | Melt Stopped |
|---|---|---|---|---|
| Melt Number | 99A05600 | | 10:00 | 23:00 |
| Product Number | 862201 | A384 1 Sec Alum Ingot | 02-12-1999 | 02-12-1999 |
| Furnace Number | 1 | | mackeyr | washburnw |

| Material Number | Gross Weight | Tare Weight | Net Weight | Charge Date | Charge Time | Clock Number | Shift |
|---|---|---|---|---|---|---|---|
| 70150221 | 19,500 | 18,660 | 840 | 02/12/1999 | 13:03.21 | 02199 | 1 |
| 70150217 | 19,380 | 18,660 | 720 | 02/12/1999 | 13:05:58 | 02199 | 1 |
| 70150230 | 19,500 | 18,660 | 840 | 02/12/1999 | 13.08:09 | 02199 | 1 |
| 70150221 | 19,440 | 18,660 | 780 | 02/12/1999 | 13:10:35 | 02199 | 1 |
| 70150217 | 19,480 | 18,660 | 820 | 02/12/1999 | 13:12:58 | 02199 | 1 |
| 70150217 | 19,540 | 18,660 | 880 | 02/12/1999 | 13:15:48 | 02199 | 1 |
| 70150217 | 19,440 | 18,660 | 780 | 02/12/1999 | 13:18:01 | 02199 | 1 |
| 70150221 | 19,440 | 18,660 | 780 | 02/12/1999 | 13:20:02 | 02199 | 1 |
| 70150217 | 19,560 | 18,660 | 900 | 02/12/1999 | 13:22:08 | 02199 | 1 |
| 70150217 | 19,520 | 18,660 | 860 | 02/12/1999 | 13:24:29 | 02199 | 1 |
| 70150217 | 19,500 | 18,660 | 840 | 02/12/1999 | 13:26:51 | 02199 | 1 |
| 70150221 | 19,560 | 18,660 | 900 | 02/12/1999 | 13:29:26 | 02199 | 1 |
| 70150217 | 19,580 | 18,660 | 920 | 02/12/1999 | 13:31:47 | 02199 | 1 |
| 70150221 | 19,440 | 18,660 | 780 | 02/12/1999 | 13:34:17 | 02199 | 1 |
| 70150221 | 19,600 | 18,660 | 940 | 02/12/1999 | 13.37:08 | 02199 | 1 |
| 70150222 | 19,340 | 18,660 | 680 | 02/12/1999 | 13.40:15 | 02199 | 1 |
| 70150221 | 19,620 | 18,660 | 960 | 02/12/1999 | 13:43:00 | 02199 | 1 |
| 70150221 | 19,700 | 18,660 | 1,040 | 02/12/1999 | 13:45:56 | 02199 | 1 |
| 70150221 | 19,400 | 18,660 | 740 | 02/12/1999 | 13:49 39 | 02199 | 1 |
| 70150221 | 19,840 | 18,660 | 1,180 | 02/12 1999 | 13:52:31 | 02199 | 1 |
| 70150221 | 19,440 | 18,660 | 780 | 02/12/1999 | 13.56:19 | 02199 | 1 |
| 70160302 | 20,040 | 18,660 | 1,380 | 02/12/1999 | 14:01 11 | 02199 | 1 |
| 70150230 | 19,560 | 18,660 | 900 | 02/12/1999 | 14:05.56 | 02199 | 1 |
| 70150222 | 19,460 | 18,660 | 800 | 02/12/1999 | 14:24:18 | 02199 | 1 |
| 70150230 | 19,960 | 18,660 | 1,300 | 02/12/1999 | 14 26:45 | 02199 | 1 |
| 70150230 | 19,500 | 18,660 | 840 | 02/12/1999 | 14:29:10 | 02199 | 1 |
| 70150217 | 19,600 | 18,660 | 940 | 02/12/1999 | 14 31:47 | 02199 | 1 |
| 70150221 | 19,600 | 18,660 | 940 | 02/12/1999 | 14:34:08 | 02199 | 1 |
| 70150217 | 19,620 | 18,660 | 960 | 02/12/1999 | 14.36:26 | 02199 | 1 |
| 70160302 | 19,940 | 18,660 | 1,280 | 02/12/1999 | 14:40:00 | 02199 | 1 |
| 70160302 | 20,060 | 18,660 | 1,400 | 02/12/1999 | 14:44:00 | 02199 | 1 |
| 70150217 | 20,340 | 18,660 | 1,680 | 02/12/1999 | 14:47:30 | 02199 | 1 |
| 70150221 | 19,580 | 18,660 | 920 | 02/12/1999 | 14 50:43 | 02199 | 1 |
| 70150221 | 19,640 | 18,660 | 980 | 02/12/1999 | 14:53:26 | 02199 | 1 |
| 70150230 | 19,340 | 18,660 | 680 | 02/12/1999 | 14:57:54 | 02199 | 1 |
| 70150221 | 19,680 | 18,660 | 1,020 | 02/12/1999 | 15:00:24 | 02199 | 1 |
| 70150221 | 19,440 | 18,660 | 780 | 02/12/1999 | 15.03.22 | 02199 | 1 |
| 70150221 | 19,820 | 18,660 | 1,160 | 02/12/1999 | 15.06:52 | 02199 | 1 |
| 70150221 | 19,420 | 18,660 | 760 | 02/12/1999 | 15:10:00 | 02145 | 1 |
| 70150221 | 19,500 | 18,660 | 840 | 02/12/1999 | 15:14:15 | 02145 | 1 |
| 70150221 | 19,540 | 18,660 | 880 | 02/12/1999 | 15:16:46 | 02145 | 1 |
| 70160501 | 20,960 | 18,660 | 2,300 | 02/12/1999 | 15:20.50 | 02145 | 1 |
| 70160301 | 20,100 | 18,660 | 1,440 | 02/12/1999 | 15:25:09 | 02145 | 1 |
| 70160301 | 19,720 | 18,660 | 1,060 | 02/12/1999 | 15:32:25 | 02145 | 1 |
| 70150230 | 20,980 | 18,660 | 2,320 | 02/12/1999 | 15:36:55 | 02145 | 1 |
| 70150221 | 19,540 | 18,660 | 880 | 02/12/1999 | 15:42:18 | 02145 | 1 |
| 70150221 | 19,340 | 18,660 | 680 | 02/12/1999 | 15:44:58 | 02145 | 1 |
| 70150221 | 19,440 | 18,660 | 780 | 02/12/1999 | 15:49:01 | 02145 | 1 |
| 70150221 | 19,740 | 18,660 | 1,080 | 02/12/1999 | 15:53:03 | 02145 | 1 |
| 70150221 | 19,420 | 18,660 | 760 | 02/12/1999 | 15:56:51 | 02145 | 1 |

# CULP ALUMINUM ALLOYS

## PRODUCTION REPORT - DETAIL MATERIAL CHARGED

| | | | Melt Started | Melt Stopped |
|---|---|---|---|---|
| Melt Number | 99A05600 | | 10.00 | 23:00 |
| Product Number | 862201 | A384.1 Sec Alum Ingot | 02-12-1999 | 02-12-1999 |
| Furnace Number | 1 | | mackeyr | washburnw |

| Material Number | Gross Weight | Tare Weight | Net Weight | Charge Date | Charge Time | Clock Number | Shift |
|---|---|---|---|---|---|---|---|
| 70150221 | 19,760 | 18,660 | 1,100 | 02/12/1999 | 16:01:53 | 02145 | 1 |
| 70150221 | 19,580 | 18,660 | 920 | 02/12/1999 | 16:05:37 | 02145 | 1 |
| 70150230 | 20,740 | 18,660 | 2,080 | 02/12/1999 | 16:26:23 | 02145 | 1 |
| 70150221 | 19,660 | 18,660 | 1,000 | 02/12/1999 | 16.28:26 | 02145 | 1 |
| 70150221 | 19,560 | 18,660 | 900 | 02/12/1999 | 16:30:34 | 02145 | 1 |
| 70150221 | 19,440 | 18,660 | 780 | 02/12/1999 | 16:33:19 | 02145 | 1 |
| 70160501 | 19,800 | 18,660 | 1,140 | 02/12/1999 | 16.35:48 | 02145 | 1 |
| 70160301 | 19,700 | 18,660 | 1,040 | 02/12/1999 | 16:38:52 | 02145 | 1 |
| 70150221 | 19,520 | 18,660 | 860 | 02/12/1999 | 16:44.28 | 02145 | 1 |
| 70150221 | 19,480 | 18,660 | 820 | 02/12/1999 | 16:46.36 | 02145 | 1 |
| 70150221 | 19,440 | 18,660 | 780 | 02/12/1999 | 16:48:59 | 02145 | 1 |
| 70150221 | 19,580 | 18,660 | 920 | 02/12/1999 | 16:51:47 | 02145 | 1 |
| 70150230 | 20,660 | 18,660 | 2,000 | 02/12/1999 | 17 02.17 | 02145 | 1 |
| 70150221 | 19,440 | 18,660 | 780 | 02/12/1999 | 17.06:46 | 02145 | 1 |
| 70150221 | 19,580 | 18,660 | 920 | 02/12/1999 | 17:11:00 | 02145 | 1 |
| 70150221 | 19,500 | 18,660 | 840 | 02/12/1999 | 17:15:31 | 02145 | 1 |
| 70160401 | 19,600 | 18,660 | 940 | 02/12/1999 | 17:20:04 | 02145 | 1 |
| 70150221 | 19,520 | 18,660 | 860 | 02/12/1999 | 17:23:09 | 02145 | 1 |
| 70150221 | 19,500 | 18,660 | 840 | 02/12/1999 | 17:26.14 | 02145 | 1 |
| 70150221 | 19,500 | 18,660 | 840 | 02/12/1999 | 17.29:55 | 02145 | 1 |
| 70150221 | 19,560 | 18,660 | 900 | 02/12/1999 | 17:33:29 | 02145 | 1 |
| 70150221 | 20,720 | 18,660 | 2,060 | 02/12/1999 | 17:37:40 | 02145 | 1 |
| 70150221 | 19,540 | 18,660 | 880 | 02/12/1999 | 17:42:04 | 02145 | 1 |
| 70150221 | 19,540 | 18,660 | 880 | 02/12/1999 | 17 45.25 | 02145 | 1 |
| 70150221 | 19,440 | 18,660 | 780 | 02/12/1999 | 17:50:55 | 02145 | 1 |
| 70150221 | 19,460 | 18,660 | 800 | 02/12/1999 | 17 54.48 | 02145 | 1 |
| 70150221 | 19,580 | 18,660 | 920 | 02/12/1999 | 17 58:56 | 02145 | 1 |
| 70160301 | 19,620 | 18,660 | 960 | 02/12/1999 | 18:04:03 | 02145 | 1 |
| 70150221 | 19,500 | 18,660 | 840 | 02/12/1999 | 18.07:53 | 02145 | 1 |
| 70150221 | 19,360 | 18,660 | 700 | 02/12/1999 | 18:11:38 | 02145 | 1 |
| 70150221 | 19,640 | 18,660 | 980 | 02/12/1999 | 18 15 04 | 02145 | 1 |
| | 2,572,580 | 2,444,460 | 128,120 | | | | |

# CULP ALUMINUM ALLOYS

PRODUCTION REPORT - DETAIL PRODUCTION/DOWNTIME HOURS REPORTED

**Melt Number** 99A05600
**Product Number** 862201 A384.1 Sec Alum Ingot
**Furnace Number** 1
**Bundles Produced** 66
**Charge Weight** 128.120

| Melt Started | Melt Stopped |
|---|---|
| 10:00 | 23:00 |
| 02-12-1999 | 02-12-1999 |
| mackeyr | washburnw |

| Operation Code | Description | Total Cycle Time (100 ths) | Production Hours (100 ths) |
|---|---|---|---|
| 22CT001 | CYCLETIME REVERB F#1 | 13.00 | |
| 22CT1CG | CHARGE TIME FURN.#1 | | 7.25 |
| 22CT1CO | CLEAN OFF FURN.#1 | | 1.75 |
| 22CT1TP | TAP TIME FURN.#1 | | 4.00 |
| | **Total Hours** | 13.00 | 13.00 |

4 bags / 8 hrs

SIDE-WELL FURNACE PROCESS DATA

RUN #: 2

DATE: 2/12/99

START TIME: 1007 (cycle started) (1015 sampling started)

END TIME:

LIME INJECTION RATE: 25 lbs/hr

CHLORINE INJ. RATE @ 72°F 20.0 psig

| TIME | CL2 INJ. RATE (lbs/hr) | BH TEMP 1 °F | BH TEMP 2 °F |
|---|---|---|---|
| 00:00 | | 120 | 155 |
| 00:20 | | 134 | 138 |
| 00:40 | | 149 | 142 |
| 01:00 | | 152 | 127 |
| 01:20 | ON at 11:00 am @ 60 lbs/hr | 146 | 135 |
| 01:40 | | 158 | 128 |
| 02:00 | | 121 | 125 |
| 02:20 | | 92 | 95 |
| 02:40 | 150 at 12:55 pm | 119 | 136 |
| 03:00 | | 139 | 143 |
| 03:20 | | 151 | 159 |
| 03:40 | | 181 | 188 |
| 04:00 | 250 at 14:15 pm | 154 | 144 |
| 04:20 | | 145 | 159 |
| 04:40 | | 161 | 157 |
| 05:00 | 200 at 15:15 pm | 135 | 152 |
| 05:20 | | 130 | 127 |
| 05:40 | | 152 | 151 |
| 06:00 | | 156 | 148 |
| 06:20 | | 160 | 143 |
| 06:40 | | 129 | 119 |
| 07:00 | | 133 | 122 |
| 07:20 | | 172 | 158 |
| 07:40 | | 126 | 112 |
| 08:00 | off at 18:15 pm | 149 | 137 |
| 08:20 | | 94 | 83 |
| 08:40 | | 91 | 96 |
| 09:00 | | 75 | 102 |
| 09:20 | | 74 | 108 |
| 09:40 | | 72 | 106 |
| 10:00 | | 70 | 106 |
| 10:20 | | 69 | 106 |
| 10:40 | | 69 | 107 |

SIDE-WELL FURNACE

RUN #: 2

DATE: 2/12/99

START TIME:

END TIME:

LIME INJ. RATE: 25 lbs/hr avg.

$CL_2$ INJ. RATE @ 72°F 20.0 psig

| TIME | $CL_2$ INJ. RATE | BH TEMP 1 °F | BH TEMP2 °F |
|---|---|---|---|
| 11:00 | | 69 | 106 |
| 11:20 | | 68 | 106 |
| 11:40 | | 70 | 107 |
| 12:00 | | 72 | 107 |
| 12:20 | | 72 | 107 |
| 12:40 | | 72 | 107 |
| 13:00 | | 73 | 106 |

Ended run 2315

Sli IR Transmissions
70150262

Sodium
70160017

Strontium Rod
70160452

Tanker Material
70150224

Titanium - Raw Material
70160601

Titanium Waffle
70160602

Trailer Sides
70150225

U/C Cast
70140265

U/C Rug Patterns
70140267

U/C Tire Molds
70140272

U/C Valve Bodies
70140266

Unclean Aluminum -Raw Material
70140101

Unclean CU AL Radiators
7C160302

Venetian Blinds
70150254

Window Screen
70150255

Zinc - Sows
70150277

Pencil Tops
70150235

Pigs
70150215

Pistons W/Cut Rods
70140269

Pistons W/Rings
70140270

Pistons W/Rings, Rods & Struts
70140268

Punchings
70150247

Purchased Alum Sows 356
70160861

Purchased Aluminum Sows
70160841

Rivets Clean
70150276

Rivets Unclean
70140277

Road Signs
70150222

Screen
70150212

Shavings, Turnings
70150217

Sheet W/Paper
70150251

Shredded Aluminum
70150221

Shredded Cans
70150229

Shredded Casts
70150230

Shredded Clips
70150231

Shredder Material
70160401

Silicon - Raw Material
70160501

Sli Ir Cast
70150261

Sli IR Extrusions
70150264

Sli IR Mixed
70150273

Sli IR Sheet
70150263

Clips
70150207

CU Coated Wire
70150250

Diesel Pistons
70140274

E. C. Wire
70150220

Ferro-Phos
70160305

Honeycomb - Epoxy
70150244

Irony Die Cast
70140252

Knockouts
70150253

Magnesium
70160801

Manufactured Aluminum Sows
70160821

Mixed Segregated
70150218

Nickel
70160303

Complete Transmissions
70140257

Die Cast
70150249

Dross
70160451

Extrusions, Pipe
70150216

Furnace Iron - Raw Material
70160701

Honeycomb - No Epoxy
70150236

Irony Unshreddable
70140275

Litho
70150211

Manganese
70160453

Mixed Low Copper
70150210

New Cast
70150204

Painted
70150214

#1 Aluminum
70150245

#2 Aluminum
70150246

20/24
70150209

70/75
70150208

Aircraft Material
70150223

Airplane Material
70150256

Aluminum Cans
70150213

Aluminum Clean - Raw Material
70150201

Aluminum Mixed Clean
70150206

Aluminum Recovery
70140271

Aluminum Sheet
70150205

Bridge Beams
70150259

Bumpers
70150248

Cast Aluminum
70150203

Chrome
70160304

CL CU AL Radiators-Raw Mtrl.
70160301

Clean Aluminum Radiators
70150232

Clean Cast, SHeet
70150234

Clean Pipe
70150258

Clean Pistons
70150226

Clean Solids, Plate
70150219

Clean Tire Molds
70150227

Clean Transmissions
70150233

Clean Tubing
70150260