United States
Environmental Protection
Agency

Office of
Solid Waste &
Emergency Response

EPA/530-SW-84-010
June 1984

Solid Waste

EPA

The Hydrologic Evaluation of Landfill Performance (HELP) Model

DRAFT

Do not remove. This document should be retained in the EPA Region 5 Library Collection.

Volume II. Documentation for Version I

Technical Resource Document for Public Comment

THE HYDROLOGIC EVALUATION OF LANDFILL PERFORMANCE (HELP) MODEL

Volume II. Documentation for Version 1

(601) 634-3709

by

P. R. Schroeder, A. C. Gibson, and M. D. Smolen
U.S. Army Engineer Waterways Experiment Station
Vicksburg, MS 39180

Interagency Agreement Number AD-96-F-2-A140

Project Officer

513 684-7875

D. C. Ammon
Solid and Hazardous Waste Research Division
Municipal Environmental Research Laboratory
Cincinnati, OH 45268

MUNICIPAL ENVIRONMENTAL RESEARCH LABORATORY
OFFICE OF RESEARCH AND DEVELOPMENT
U.S. ENVIRONMENTAL PROTECTION AGENCY
CINCINNATI, OH 45268

OFFICE OF SOLID WASTE AND EMERGENCY RESPONSE
U.S. ENVIRONMENTAL PROTECTION AGENCY
WASHINGTON, DC 20460

U.S. Environmental Protection Agency
Region 5, Library (PL-12J)
77 West Jackson Boulevard, 12th Floor
Chicago, IL 60604-3590

DISCLAIMER

This report was prepared by P. R. Schroeder, A. C. Gibson, and M. D. Smolen of the U.S. Army Engineer Waterways Experiment Station, Vicksburg, Mississippi under Interagency Agreement AD-96-F-2-A140. The EPA Project Officer was D. C. Ammon of the Municipal Environmental Research Laboratory, Cincinnati, Ohio.

This is a draft report that is being released by EPA for public comment on the accuracy and usefulness of the information in it. The report has received extensive technical review but the Agency's peer and administrative review process has not yet been completed. Therefore, it does not necessarily reflect the views or policies of the Agency. Mention of trade names or commercial products does not constitute endorsement or recommendation for use.

FOREWORD

The Environmental Protection Agency was created because of increasing public and governmental concern about the dangers of pollution to the health and welfare of the American people. Noxious air, foul water, and spoiled land are tragic testimony to the deterioration of our natural environment. The complexity of the environment and the interplay between its components require a concentrated and integrated attack on the problem.

Research and development is the first necessary step in problem solution; it involves defining the problem, measuring its impact, and searching for solutions. The Municipal Environmental Research Laboratory develops new and improved technology and systems to prevent, treat, and manage wastewater and the solid and hazardous waste pollutant discharges from municipal and community sources; to preserve and treat public drinking water supplies; and to minimize the adverse economic, social, health and aesthetic effects of pollution. This publication is one of the products of that research--a vital communications link between the researcher and the user community.

The Hydrologic Evaluation of Landfill Performance (HELP) program was developed to facilitate rapid, economical estimations of the water movement across, into, through, and out of landfills. The program is applicable for evaluation of open, partially closed, and fully closed sites by both designers and permit writers.

FRANCIS T. MAYO
Director
Municipal Environmental Research
Laboratory

PREFACE

Subtitle C of the Resource Conservation and Recovery Act (RCRA) requires the Environmental Protection Agency (EPA) to establish a Federal hazardous waste management program. This program must ensure that hazardous wastes are handled safely from generation until final disposition. EPA issued a series of hazardous waste regulations under Subtitle C of RCRA that is published in 40 Code of Federal Regulations (CFR) 260 through 265 and 122 through 124.

Parts 264 and 265 of 40 CFR contain standards applicable to owners and operators of all facilities that treat, store, or dispose of hazardous wastes. Wastes are identified or listed as hazardous under 40 CFR Part 261. The Part 264 standards are implemented through permits issued by authorized states or the EPA in accordance with 40 CFR Part 122 and Part 124 regulations. Land treatment, storage, and disposal (LTSD) regulations in 40 CFR Part 264 issued on July 26, 1982, establish performance standards for hazardous waste landfills, surface impoundments, land treatment units, and waste piles.

The Environmental Protection Agency is developing three types of documents for preparers and reviewers of permit applications for hazardous waste LTSD facilities. These types include RCRA Technical Guidance Documents, Permit Guidance Manuals, and Technical Resource Documents (TRD's). The RCRA Technical Guidance Documents present design and operating specifications or design evaluation techniques that generally comply with or demonstrate compliance with the Design and Operating Requirements and the Closure and Post-Closure Requirements of Part 264. The Permit Guidance Manuals are being developed to describe the permit application information the Agency seeks and to provide guidance to applicants and permit writers in addressing the information requirements. These manuals will include a discussion of each step in the permitting process, and a description of each set of specifications that must be considered for inclusion in the permit.

The Technical Resource Documents present state-of-the-art summaries of technologies and evaluation techniques determined by the Agency to constitute good engineering designs, practices, and procedures. They support the RCRA Technical Guidance Documents and Permit Guidance Manuals in certain areas (i.e., liners, leachate management, closure covers, water balance) by describing current technologies and methods for designing hazardous waste facilities or for evaluating the performance of a facility design. Although emphasis is given to hazardous waste facilities, the information presented in these TRD's may be used in designing and operating non-hazardous waste LTSD facilities as well. Whereas the RCRA Technical Guidance Documents and Permit Guidance Manuals are directly related to the regulations, the information in these TRD's covers a broader perspective and should not be used to interpret the requirements of the regulations.

This document is a first edition draft being made available for public review and comment. It has undergone review by recognized experts in the technical areas covered, but Agency peer review processing has not yet been completed. Public comment is desired on the accuracy and usefulness of the information presented in this manual. Comments received will be evaluated, before publication of the second edition. Communications should be addressed to Docket Clerk, Room S-212, Office of Solid Waste (WH-562), U.S. Environmental Protection Agency, 401 M Street, S.W., Washington, D.C. 20460. The document under discussion should be identified by title (e.g., "The Hydrologic Evaluation of Landfill Performance (HELP) Model").

ABSTRACT

The Hydrologic Evaluation of Landfill Performance (HELP) program was developed to facilitate rapid, economical estimation of the amounts of surface runoff, subsurface drainage, and leachate that may be expected to result from the operation of a wide variety of possible landfill designs. The program models the effects of hydrologic processes including precipitation, surface storage, runoff, infiltration, percolation, evapotranspiration, soil moisture storage, and lateral drainage using a quasi-two-dimensional approach. In this document, the theories and assumptions upon which the HELP model is based, the solution techniques employed, and the internal logic of the computer program are presented and discussed in detail.

This report was submitted in partial fulfillment of Interagency Agreement Number AD-96-F-2-A140 between the U.S. Environmental Protection Agency and the U.S. Army Engineer Waterways Experiment Station. This report covers a period from April 1982 to August 1983, and work was completed as of August 1983.

CONTENTS

Foreword iii

Preface iv

Abstract vi

Figures viii

Tables ix

Acknowledgments. x

1. Program Identification 1
2. Engineering Documentation 3
3. Program Documentation 36
4. System Documentation 58
5. Operating Documentation 62

References 69

Appendices

A. HELP Source Program Listing 71
B. Program Variables 204
C. Organization of the HELP Model 238
D. Comparison with Results of DRAINFIL Model 249

FIGURES

Number		Page
1	Typical hazardous waste landfill profile	5
2	Relationship between runoff, precipitation, and retention	8
3	SCS rainfall-runoff relation normalized on retention parameter S	10
4	Relationship between SCS curve number and minimum infiltration rate (MIR) for various vegetative covers	13
5	Error in lateral drainage computation as a function of interval period and head	29
6	Extent of nonlinearity in drainage curves	30
7	General relation between soil-water, soil texture, and hydraulic conductivity	37

TABLES

Number		Page
1	Constants Used in HELP Model	33
2	Soil Variables for Default Soil Data Input	34
3	Climatologic Characteristics for Default Input	35
4	Typical Leaf Area Index Distributions for Various Vegetative Covers	38
5	Manual Climatologic Input	41
6	Listing of Default Cities and States	42
7	Default Climatologic Input Variables	43
8	Manual Soil Characteristics Input	43
9	Default Soil Characteristics Input	45
10	Default Soil Characteristics	46
11	Design Data Input	47
12	Daily Output Variables	48
13	Output of Monthly Totals	50
14	Output of Annual Totals	51
15	Output of Average Values	54
16	Output of Peak Daily Values	57
17	Data Files and Device Numbers	60
18	Job Control Cards	63

ACKNOWLEDGMENTS

The authors would like to express their sincere appreciation to Mrs. Cheryl Lloyd, Mr. Thomas E. Schaefer, Jr., and Dr. Joe M. Morgan of the Environmental Engineering Division, U.S. Army Engineer Waterways Experiment Station, for their many contributions to the development of this document.

SECTION 1

PROGRAM IDENTIFICATION

PROGRAM TITLE

Hydrologic Evaluation of Landfill Performance Model

PROGRAM CODE NAME

HELP

WRITERS

Paul R. Schroeder, Anthony C. Gibson, and Michael D. Smolen

ORGANIZATION

U.S. Army Engineer Waterways Experiment Station (WES)

DATE

August 1983

UPDATE

None Version No.: 1

SOURCE LANGUAGE

IBM 360/370 and CDC Extended FORTRAN IV

AVAILABILITY

A complete program listing is provided in Appendix A. Source cards and magnetic tape are available from the Office of Data Base Service, National Technical Information Service (NTIS). The program is addressable on the U.S. Environmental Protection Agency National Computer Center system. Computer accounts for the system are available through NTIS.

ABSTRACT

The Hydrologic Evaluation of Landfill Performance (HELP) model is a quasi-two-dimensional, deterministic, computer-based water budget model. The model was developed and adapted from the U.S. Environmental Protection Agency HSSWDS

model and the U.S. Department of Agriculture CREAMS Hydrologic model. The HELP model computes runoff by the Soil Conservation Service runoff curve number method. Evapotranspiration is computed by a modified Penman method developed by Ritchie and adapted for limiting soil moisture in the manners of Shanholtz and Saxton. Percolation is determined by applying Darcy's Law for saturated flow with modifications for unsaturated conditions. Lateral drainage is computed analytically from a linearized Boussinesq equation which is corrected to agree with numerical solutions of the Boussinesq equation for the range of design specifications used in hazardous waste landfills. The model uses climatologic and design input data in the form of daily rainfall, mean monthly temperatures, mean monthly solar radiation, leaf area indices, soil characteristics, and design specifications to perform a sequential daily analysis to determine runoff, evapotranspiration, percolation, and lateral drainage for the landfill (cap, waste cell, leachate collection system, and liner) and to obtain daily, monthly, and annual water budgets.

SECTION 2

ENGINEERING DOCUMENTATION

NARRATIVE DESCRIPTION

The Hydrologic Evaluation of Landfill Performance (HELP) model was developed to help hazardous waste landfill designers and evaluators estimate the magnitudes of components of the water budget and the height of water saturated soil above barrier soil layers. This quasi-two-dimensional, deterministic computer-based water budget model was developed and adapted from the U.S. Environmental Protection Agency Hydrologic Simulation Model for Estimating Percolation at Solid Waste Disposal Sites (HSSWDS) (1,2) and the U.S. Department of Agriculture Chemical Runoff and Erosion from Agricultural Management Systems (CREAMS) Hydrologic model (3). The HELP model performs a sequential daily analysis to determine runoff, evapotranspiration, percolation, and lateral drainage for the landfill (cap, waste cell, leachate collection system, and liner) and obtain daily, monthly, and annual water budgets. The model does not account for lateral inflow and surface runon.

The HELP model requires climatologic data, soil characteristics, and design specifications to perform the analysis. Climatologic input data consist of daily precipitation values, mean monthly temperatures, mean monthly solar radiation values, leaf area indices, evaporative zone depth, and winter cover factors. Soil characteristics include porosity, field capacity, wilting point, hydraulic conductivity, water transmissivity evaporation coefficient and Soil Conservation Service (SCS) runoff curve number for antecedent moisture condition II. Design specifications consist of the number of layers and their descriptions including type, thickness, slope, and maximum lateral distance to a drain, if applicable, and whether synthetic membranes are to be used in the cover and/or liner. The HELP model maintains five years of default climatologic data for 102 cities throughout the United States. Any of seven default options for vegetation may be specified. The model also stores default soil characteristics for 21 soil types for use when measurements or site specific estimates are not available.

The model is ordinarily used in the conversational mode. This enables users to interact directly with the program and receive output through the terminal immediately. Use of the model does not require prior experience with computer programming; though, some experience would assist the user in logging on the computer system and manipulating data files. The model can also be run in the batch mode; however, this requires more computer programming experience and extreme care in preparation of input data files.

The definition sketch of a typical closed landfill profile is shown in Figure 1. The sketch shows six layers--three in the cover or cap and three in the waste, drain, and liner system. Two subprofiles or modeling units for water routing are shown. A subprofile consists of all layers between (and including) the landfill surface and the bottom of the top barrier soil layer, between the bottom of a barrier soil layer and the bottom of the next lower barrier soil layer, or between the bottom of the lowest barrier soil layer and the bottom of the lowest soil layer considered. In the sketch, the top subprofile contains the layers of the cover, and the bottom subprofile is composed of the waste, drain, and liner system at the base of the landfill. Four types of layers are shown in the sketch: vertical percolation, lateral drainage, waste, and barrier.

Vertical percolation layers (e.g., layer 1 on Figure 1) are assumed to have great enough hydraulic conductivity that vertical flow in the downward direction (i.e., percolation) is not significantly restricted. Lateral drainage is not permitted, but water can move upward and be lost to evapotranspiration, depending upon the specified depth of the evaporative zone. Percolation is modeled as being independent of the depth of water saturated soil (i.e., the head) above the layer. Layers designed to support vegetation should generally be designated as vertical percolation layers.

Lateral drainage layers are assumed to have hydraulic conductivity high enough that little resistance to flow is offered. The hydraulic conductivity of drainage layers should be greater than or equal to the hydraulic conductivity of the overlying layer. Vertical flow is modeled in the same manner as for a vertical percolation layer; however, lateral outflow is allowed. This lateral drainage is considered to be a function of the slope of the bottom of the layer, the maximum horizontal distance that water must traverse to drain from the layer, and the depth of water saturated soil above the top of the underlying barrier soil layer. (Note: a lateral drainage layer may be underlain by only another lateral drainage layer or a barrier soil layer.) The slope at the bottom of the layer may vary from 0 to 10 percent, and the maximum drainage distance may range between 25 and 200 feet. Layers 2 and 5 on Figure 1 are lateral drainage layers.

Barrier soil layers serve the purpose of restricting vertical flow. Thus, such layers should have hydraulic conductivity substantially lower than for vertical percolation, lateral drainage, or waste layers. The program limits the direction of flow in barrier soil layers to downward. Thus, any water moving into a barrier layer will eventually percolate through. Percolation is modeled as a function of the depth of water saturated soil (head) above the base of the layer. The program recognizes two types of barrier layers; those composed of soil alone and those composed of soil overlain by an impermeable synthetic membrane. In the latter case, the user must specify some membrane leakage fraction. This factor may be thought of simply as the fraction (range 0 to 1) of the maximum daily potential percolation (i.e., the percolation that would occur in the absence of the membrane) through the layer that is expected to actually occur on a day with the membrane in place and with the same head on the barrier layer. The net effect of specifying the presence of a membrane is to reduce the effective hydraulic conductivity of the layer.

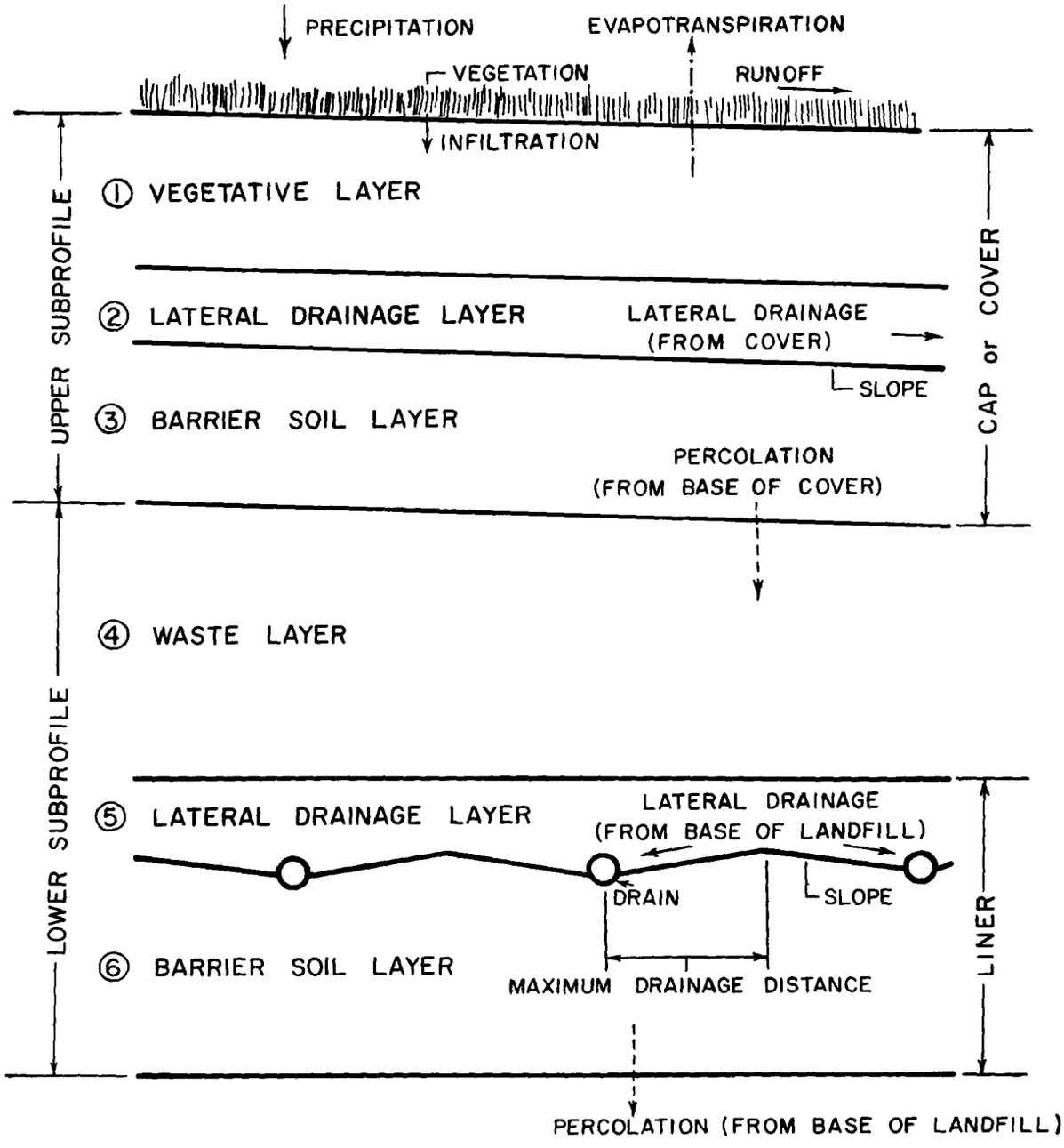

Figure 1. Typical hazardous waste landfill profile.

The program does not model aging of the membrane. Layers 3 and 6 shown on Figure 1 are barrier layers.

Water movement through a waste layer is modeled in the same manner as for a vertical percolation layer. However, identifying a layer as a waste layer indicates to the program which layers should be considered part of the landfill cap or cover (see Figure 1), and which layer should be considered as part of the liner/drainage system. Layer 4 shown on Figure 1 is a waste layer.

If the topmost layer of a landfill profile is identified as a waste layer, the program assumes that the landfill is open. In this case, the user must specify an SCS runoff curve number and the fraction (a factor that may vary from 0 to 1) of the potential surface runoff that is actually collected and removed from the landfill surface.

METHOD OF SOLUTION

The HELP model was developed to estimate daily water movement on the surface and through the landfill. Precipitation is partitioned into runoff, evapotranspiration, percolation, and subsurface lateral drainage to maintain a continuous water balance. The HELP model computes runoff by the Soil Conservation Service (SCS) runoff curve number method (4) and percolation by Darcy's Law for saturated flow (5) with modifications for unsaturated conditions. Lateral drainage is computed analytically from a linearized Boussinesq equation, corrected to agree with numerical solutions of the non-linearized Boussinesq equation for the range of design specifications used in hazardous waste landfills (6). Evapotranspiration is determined by a modified Penman method developed by Ritchie (7) and adapted for limiting soil moisture conditions in the manner of Shanholtz et al. (8) and Saxton et al. (9). Solution principles are described in detail below.

Mathematical modeling may deal with deterministic and stochastic variables. A stochastic variable is one whose properties are governed by purely random-time events and sequential relations as well as functional relations with other hydrologic variables. A deterministic variable is one whose temporal and spatial properties are known; i.e., it is assumed that the behavior of such a variable is definite and its characteristics can be predicted. The HELP model is deterministic in concept insofar as the model treats all variables and their relationships as being definitely known, although often with empirical relationships. However, the results of 20 years of simulation should not be considered as simulation through a 20-year period since the effects of aging of the landfill are not modeled. The simulation results should be used to demonstrate the probabilities of various outcomes for the given characteristics of the landfill.

Runoff

During a given rainfall, water falling on a waste disposal site is continually intercepted by trees, plants, root surfaces, etc. However, infiltration and evapotranspiration also occur simultaneously throughout the period. Once rain begins to fall and the initial requirements of infiltration are

fulfilled, natural depressions collect the excess rain to form small puddles. In addition, a film of water begins to build up on permeable and impermeable surfaces within the waste disposal site. This stored water collects in small rivulets and is hence conveyed into small channels, and, thus, surface runoff is produced.

The SCS curve number technique presented in Section 4 of the National Engineering Handbook (4) was selected to model the runoff process because (10):

a. It is a well established reliable procedure.

b. It is computationally efficient.

c. The required input is generally available; and

d. Various soil types, land use and management practices can be conveniently handled.

The procedures were developed from observed runoff-rainfall relationships for large storms on small watersheds, as presented in the following paragraphs (4).

Runoff was plotted as a function of rainfall on arithmetic graph paper having equal scales, yielding a curve that becomes asymptotic to a straight line with a 45° slope at high rainfall as shown in Figure 2. The equation of the straight line portion of the runoff curve, assuming no initial abstraction or lag between the times when runoff and rainfall starts, is

$$Q = P' - S' \tag{1}$$

where

Q = actual runoff, inches

P' = maximum potential runoff or actual rainfall after runoff starts, inches

S' = potential maximum retention by any means after runoff starts, inches

S' is a constant for a particular storm because it is the maximum retention that can occur under existing conditions of watershed characteristics and rainfall intensity if the storm continues indefinitely. The relation between precipitation, runoff, and retention (the difference between the rainfall and runoff) at any point on the runoff curve was found to be

$$\frac{F}{S'} = \frac{Q}{P'} \tag{2}$$

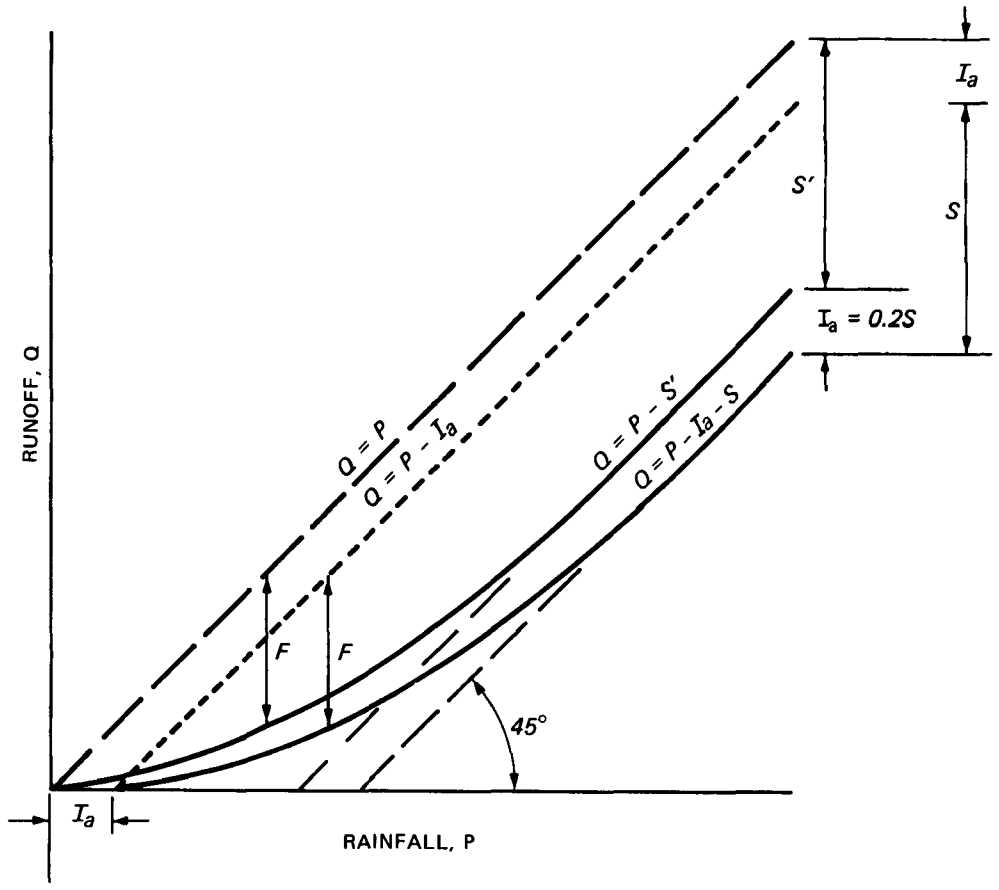

Figure 2. Relationship between runoff, precipitation, and retention.

where

F = actual retention after runoff starts, inches

= P' - Q

Substituting for F,

$$\frac{P' - Q}{S'} = \frac{Q}{P'} \tag{3}$$

where P' is the actual rainfall when initial abstraction does not occur.

If initial abstraction were considered, the runoff curve would be translated to the right, as shown in Figure 1, by the amount of precipitation which occurred prior to the start of runoff. This amount of precipitation is the initial abstraction. Therefore, to form the relationship with initial abstraction analogous to Equation 3, the initial abstraction would be subtracted from the precipitation.

$$P' = P - I_a \tag{4}$$

Equation 3 becomes

$$\frac{P - I_a - Q}{S'} = \frac{Q}{P - I_a} \tag{5}$$

where

P = actual rainfall, inches

I_a = initial abstraction, inches

In the SCS derivation (4), the maximum retention parameter, S', in Equation 5 is termed S, but both parameters are equal.

$$S = S' \tag{6}$$

Equation 6 has been corrected from the SCS derivation (4).

Rainfall and runoff data from a large number of small experimental watersheds empirically indicated that (4)

$$I_a = 0.2S \tag{7}$$

Substituting Equations 6 and 7 into Equation 5 and solving for Q,

$$Q = \frac{(P - 0.2S)^2}{(P + 0.8S)} \tag{8}$$

Performing polynomial division on Equation 8 and dividing both sides of the equation by S,

$$\frac{Q}{S} = \frac{P}{S} - 1.2 - \frac{1.0}{\frac{P}{S} + 0.8} \tag{9}$$

Equation 9 is the normalized runoff-rainfall relationship for any S and is plotted in Figure 3.

The potential maximum retention parameter excluding initial abstraction, S, was transformed into runoff curve numbers, CN, to make interpolating, averaging, and weighting operations more nearly linear, as follows:

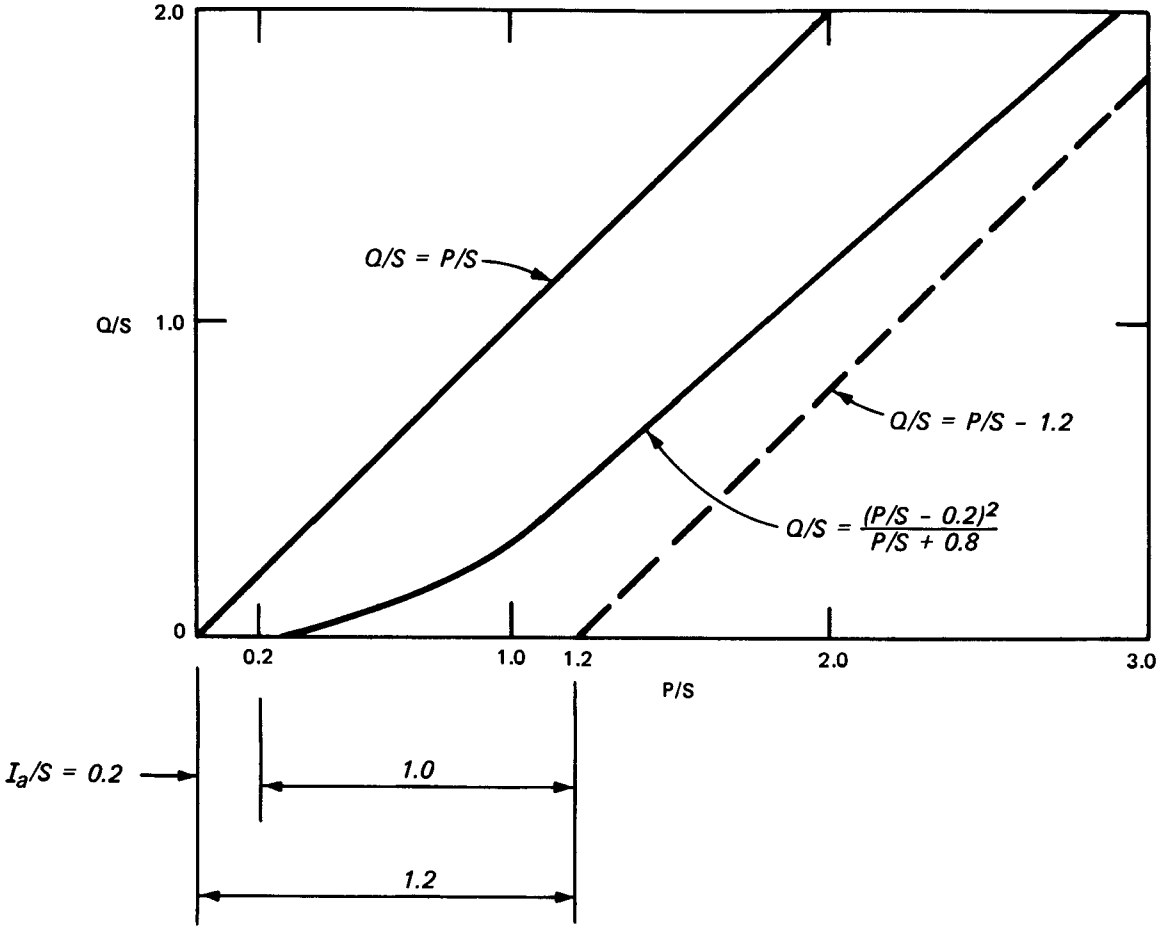

Figure 3. SCS rainfall-runoff relation normalized on retention parameter S.

$$CN = \frac{1000}{S + 10} \tag{10}$$

$$S = \frac{1000}{CN} - 10 \tag{11}$$

The retention parameter, S, for a given soil varies as a function of the soil moisture in the following manner which differs slightly from the CREAMS documentation (3) in that the water content below the wilting point was not included in their soil moisture term:

$$S = S_{mx} \left[1 - \frac{SM - WP}{UL - WP} \right] \tag{12}$$

where

S_{mx} = maximum value of S, inches

SM = soil water content in the vegetative or evaporative zone, inches

UL = upper limit of soil water storage and defined as the storage capacity at saturation, inches

WP = wilting point of the soil or the lowest naturally occurring soil water content, inches

Since soil water is not distributed uniformly throughout the soil profile and since the soil moisture near the surface influences infiltration more strongly than that located elsewhere, the retention parameter should be depth-weighted. The soil profile of the vegetative or evaporative depth is, therefore, divided into seven segments. The thickness of the top segment is set to equal one-thirtysixth of the thickness of the vegetative or evaporative depth and the thickness of the second segment is five-thirtysixths of the thickness of the vegetative or evaporative depth. The thickness of each of the bottom five segments is defined as one-sixth of the thickness of the vegetative or evaporative depth. The evaporative depth is specified by the user and is the maximum depth from which moisture can be removed by evapotranspiration, but this depth cannot exceed the depth to the top of the uppermost barrier soil layer. The depth-weighted retention parameter is computed with the following equation (3):

$$S = S_{mx}\left[1 - \sum_{j=1}^{7} W_j\left(\frac{SM_j - WP_j}{UL_j - WP_j}\right)\right] \tag{13}$$

where

W_j = weighting factor for segment j

SM_j = soil water content of segment j, inches

UL_j = saturated capacity of segment j, inches

WP_j = wilting point of segment j, inches

The weighting factors decrease with the depth of the segment in accordance with the following equation from the CREAMS development (3):

$$W_j = 1.0159\left[e^{-4.16\left(\frac{D_{j-1}}{VD}\right)} - e^{-4.16\left(\frac{D_j}{VD}\right)}\right] \tag{14}$$

where

D_j = depth to bottom of segment j, inches

VD = vegetative or evaporative depth, inches

Therefore, the weighting factors for segments 1, 2, 3, 4, 5, 6, and 7 are 0.111, 0.397, 0.254, 0.127, 0.063, 0.032, and 0.016, respectively.

The maximum value of S, S_{mx}, is the value of S at the lowest soil moisture content which corresponds to antecedent moisture condition I (AMC-I) in the SCS method (4). S_{mx} is related to the curve number for AMC-I, CN_I, as follows:

$$S_{mx} = \frac{1000}{CN_I} - 10 \tag{15}$$

Generally, the curve number for a watershed is determined for average moisture conditions (AMC-II) in the SCS method and the curve number is termed CN_{II}. CN_{II} can be estimated from Figure 4 which was developed from the relationship between soil hydrologic group and minimum infiltration rate (4,11) presented in Table 6 and from the CN_{II} values for various combinations of soil type and vegetation type (4). In the CREAMS development (3), CN_I was related to CN_{II} by the following polynomial:

$$CN_I = -16.91 + 1.348(CN_{II}) - 0.01379(CN_{II})^2 + 0.0001177(CN_{II})^3 \tag{16}$$

Summarizing the procedures used in the HELP model to determine daily runoff, the approach is:

a. Knowing CN_{II} for the site, compute CN_I and S_{mx} using Equations 16 and 15, respectively.

b. Compute the daily depth-weighted retention parameter, S_i.

c. Compute the daily runoff, Q_i, by Equation 8.

Infiltration

Infiltration is equal to the difference between the daily precipitation, the sum of the change in surface storage of precipitation (snow), the daily runoff, and the surface evaporation. If the mean daily temperature is below 32°F, precipitation is stored on the surface as snow and does not contribute to infiltration or runoff until the mean daily temperature exceeds 32°F. The daily snowmelt is computed as follows (4):

$$M_i = \begin{cases} 0 & \text{for } T_i \le 32 \text{ or } SNO_{i-1} = 0 \\ 0.06(T_i - 32) & \text{for } T_i > 32 \text{ and } SNO_{i-1} > 0.06(T_i - 32) \\ SNO_{i-1} & \text{for } T_i > 32 \text{ and } SNO_{i-1} \le 0.06(T_i - 32) \end{cases} \tag{17}$$

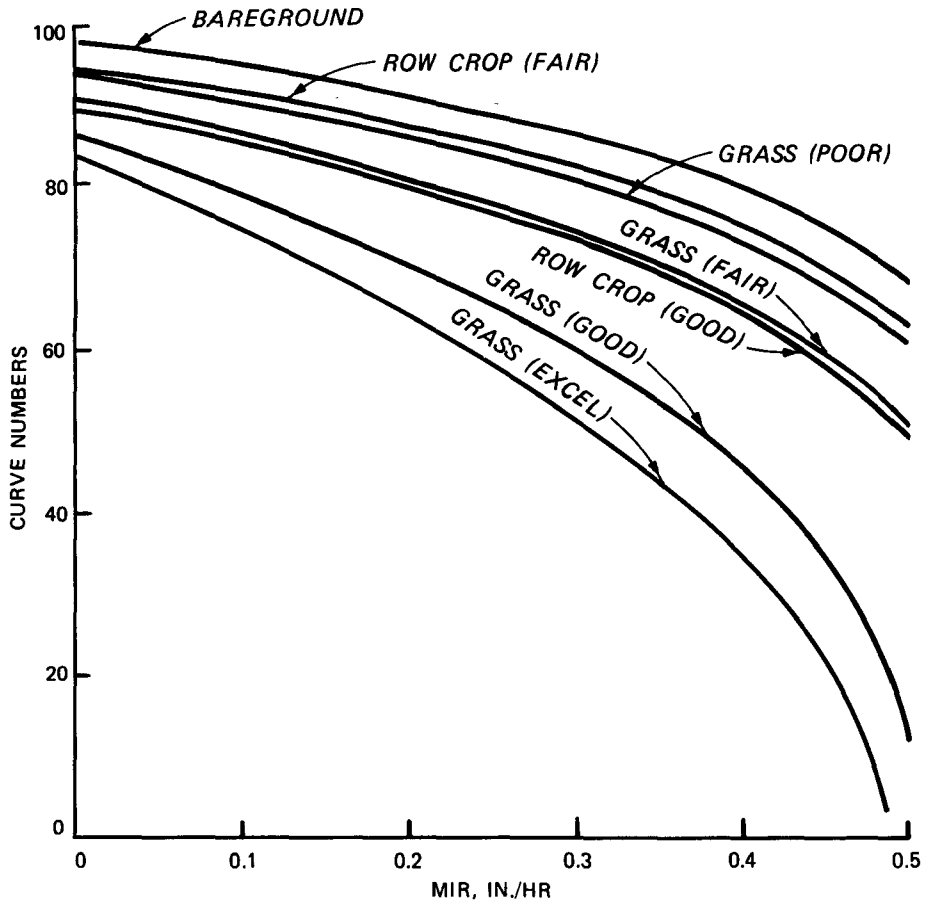

Figure 4. Relationship between SCS curve number and minimum infiltration rate (MIR) for various vegetative covers.

where

M_i = amount of snowmelt on day i, inches

T_i = mean temperature on day i, °F

SNO_{i-1} = amount of snowwater at end of day i-1, inches

$$SNO_i = \begin{cases} SNO_{i-1} + PRE_i - ESS_i & \text{for } T_i \leq 32 \\ SNO_{i-1} - M_i & \text{for } T_i > 32 \text{ and } ESS_i \leq M_i + PRE_i \\ SNO_{i-1} - ESS_i & \text{for } T_i > 32 \text{ and } ESS_i > M_i + PRE_i \end{cases} \quad (18)$$

where PRE_i = actual precipitation on day i, inches

ESS_i = surface water evaporation on day i, inches

The daily runoff, Q_i, is computed from Equation 8 using the net rainfall in inches, P_i, where

$$P_i = PRE_i + SNO_{i-1} - SNO_i - ESS_i \tag{19}$$

Therefore, the net daily infiltration is computed as follows:

$$IN_i = P_i - Q_i \tag{20}$$

where IN_i = infiltration on day i, inches

Evapotranspiration

The evapotranspiration from a landfill cover is a function of the energy available, the vegetation, the soil water transmissivity, and the soil water content. The potential evapotranspiration is computed by a modified Penman method developed by Ritchie (7) and used in CREAMS (3).

$$E_{o_i} = \frac{1.28\ A_i H_i}{(A_i + G)25.4} \tag{21}$$

where

E_{o_i} = potential evapotranspiration on day i, inches

A_i = slope of saturation vapor pressure curve on day i

H_i = net solar radiation on day i, langleys

G = psychrometric constant which is assumed to remain constant at 0.68

A_i is computed with the following equation:

$$A_i = \frac{5304}{TK_i^2}\ e^{(21.255 - 5304/TK_i)} \tag{22}$$

where TK_i = mean temperature in °K on day i. H_i is computed by the following equation:

$$H_i = \frac{(1 - L)R_i}{58.3} \tag{23}$$

where

L = albedo for solar radiation, which is assumed to remain constant at 0.23

R_i = solar radiation on day i, langleys

Daily mean temperatures and solar radiation values are interpolated from mean monthly temperatures and solar radiation values by fitting the monthly values to a simple harmonic curve with an annual period using Fourier analysis (12). The form of the equation is

$$V_i = \bar{V} + A \cos\left(\frac{2\pi(i - 0.5)}{ND}\right) + B \sin\left(\frac{2\pi(i - 0.5)}{ND}\right) \tag{24}$$

where

V_i = interpolated value of day i

$\bar{V}$ = average annual value

A = coefficient of the cosine term

B = coefficient of the sine term

ND = number of days in a year

The coefficients of the equation are computed as follows:

$$A = \frac{2}{12} \sum_{h=1}^{12} V_h \cos\left(\frac{2\pi(h - 0.5)}{12}\right) \tag{25}$$

$$B = \frac{2}{12} \sum_{h=1}^{12} V_h \sin\left(\frac{2\pi(h - 0.5)}{12}\right) \tag{26}$$

where

V_h = mean monthly value for month h

The daily potential evapotranspirative demand as calculated in Equation 21 is exerted first on water available on the surface, either snow or precipitation. If adequate water is present on the surface to satisfy the demand, water is not taken from the soil column for evapotranspiration. Any demand in excess of the surface water is exerted on the soil column in the forms of soil evaporation and plant transpiration when above freezing. That portion of the potential evaporative demand that is met by evaporation of surface moisture, ESS, is given for day i by

$$ESS_i = \begin{cases} E_{o_i} & \text{for } E_{o_i} \leq SNO_{i-1} + PRE_i \\ SNO_{i-1} + PRE_i & \text{for } E_{o_i} > SNO_{i-1} + PRE_i \end{cases} \tag{27}$$

$$ES_i + EP_i = 0 \quad \text{for } T_i \leq 32 \tag{28}$$

where ES_i = actual soil evaporation on day i, inches

EP_i = actual plant transpiration on day i, inches

The model computes soil evaporation and plant transpiration separately. The potential soil evaporation through the surface is predicted by the following equation when evaporation is not limited by transmission of water to the surface:

$$ES_{o_i} = E_{o_i} e^{-0.4\ LAI_i} \tag{29}$$

where

ES_{o_i} = potential soil evaporation on day i, inches

LAI_i = leaf area index, on day i, of actively transpiring plants measured on a scale of 0 to 3

During the nongrowing or dormant period, the LAI, which is based on the leaf area of actively transpiring plants, would be equal to zero. However, the actual winter cover would not be bareground as a LAI index as used in Equation 29 implies. This dead or dormant vegetative cover would reduce the heating of the soil surface in the same manner as actively transpiring plants and, therefore, would similarly reduce the potential soil evaporation. The potential soil evaporation for winter cover is computed as follows:

$$ES_{o_i} = E_{o_i} e^{-0.4\ WCF} \tag{30}$$

where WCF = winter cover factor

= 0 for bareground and for row crops

= 1.8 for an excellent grass stand

= 1.2 for a good grass stand

= 0.6 for a fair grass stand

= 0.3 for a poor grass stand

Soil evaporation occurs in two stages. Stage one evaporation is controlled only by the energy available, while stage two evaporation is limited also by water transmission through the soil. In stage one,

$$ES1_i = ES_{o_i} \tag{31}$$

where $ES1_i$ = stage one evaporation from soil on day i, inches.

Stage one evaporation occurs when the total-to-date of the soil evaporation less the infiltration is less than the upper limit for stage one evaporation, U. The limit represents the quantity of water that can be readily transmitted to the surface. The total of soil evaporation less infiltration, ES1T, is computed as follows:

$$ES1T_i = \sum_{k=m}^{i} ES_k - IN_k \tag{32}$$

where

ES_k = soil evaporation on day k, as computed in Equation 35, inches

m = last day when ES1T equalled zero

The upper limit of stage one evaporation in inches, U, is (3)

$$U = \left[9\ (a_s - 3)^{0.42}\right] \Big/ 25.4 \tag{33}$$

where

a_s = soil transmissivity parameter for evaporation given in Table 6, $mm/day^{0.5}$

When $ES1T_i$ is greater than the upper limit for accumulated stage one soil evaporation (U), in inches, stage one evaporation stops and stage two evaporation starts. Stage two evaporation from the soil is computed by Equation 34 (3).

$$ES2_i = a_s \left[t_i^{1/2} - (t_i - 1)^{1/2}\right] \Big/ 25.4 \tag{34}$$

where

$ES2_i$ = stage two soil evaporation for day i, inches

t_i = days since stage one evaporation ended

Since the daily total of soil evaporation, surface evaporation, and plant transpiration cannot exceed the daily potential evapotranspiration, the daily soil evaporation is

$$ES_i = \begin{cases} ES1_i & \text{for } ES1T_i < U \text{ and } ESS_i + ES1_i \le E_{o_i} \\ ES2_i & \text{for } ES1T_i \ge U \text{ and } ESS_i + ES2_i \le E_{o_i} \\ E_{o_i} - ESS_i & \text{for } ES1T_i < U \text{ and } ESS_i + ES1_i > E_{o_i} \\ E_{o_i} - ESS_i & \text{for } ES1T_i \ge U \text{ and } ESS_i + ES2_i > E_{o_i} \end{cases} \tag{35}$$

The potential plant transpiration is computed as follows:

$$EP_{o_i} = \frac{E_{o_i} \; LAI_i}{3} \tag{36}$$

where EP_{o_i} = potential plant transpiration on day i, inches

The actual plant transpiration is equal to the potential plant transpiration except when limited by low soil moisture or when the daily total of the surface evaporation, soil evaporation, and plant transpiration exceeds the daily potential evapotranspiration.

$$EPD_i = \begin{cases} EP_{o_i} & \text{for } EP_{o_i} + ESS_i + ES_i \le E_{o_i} \\ E_{o_i} - ESS_i - ES_i & \text{for } EP_{o_i} + ESS_i + ES_i > E_{o_i} \end{cases} \tag{37}$$

where EPD_i is the actual plant transpiration demand in inches on day i. The actual evapotranspiration varies as a function of the soil moisture and the plant transpiration demand as shown by Shanholtz and Lillard (8); Saxton, Johnson, and Shaw (9); and Sudar, Saxton, and Spomer (13). Using the relative evapotranspiration rate curves for no-tillage areas given by Shanholtz and Lillard (8), the following relationship was developed.

$$EP_i = EPD_i \left[1.20 - (4 \; EPD_i) + \left(\frac{SM_i - WP}{FC - WP} \right) \right] \tag{38}$$

where EP_i is the actual plant transpiration in inches on day i. If EP_i as computed by Equation 38 is less than zero, it is set to equal zero; and if greater than EPD_i, it is set to equal EPD_i. The soil moisture, field capacity and wilting point values used in Equation 38 are depth weighted as follows:

$$SM_i = \sum_{j=1}^{7} W(j) \; SM_i(j) \tag{39a}$$

$$FC = \sum_{j=1}^{7} W(j)\ FC(j) \tag{39b}$$

$$WP = \sum_{j=1}^{7} W(j)\ WP(j) \tag{39c}$$

where j refers to the number of a segment and W(j) is the weighting factor as used in Equation 13 and computed in Equation 14.

The leaf area indices used in the model are typical values for a year without severe dry periods during the growth season. The model uses leaf area indices for thirteen dates throughout the year to compute twelve rates of change in the leaf area index as follows:

$$DLAI(m \text{ to } n) = \frac{LAI(n) - LAI(m)}{n - m} \tag{40}$$

where DLAI(m to n) = the daily rate of change in the typical leaf area index between day m and day n

LAI(n) = typical leaf area index on day n

The daily leaf area indices are computed as follows:

$$LAI_i = \begin{cases} LAI_{i-1} + DLAI_i & \text{for } SM_{i-1} > CRITS \text{ or } DLAI_i \leq 0 \\ LAI_{i-1} & \text{for } SM_{i-1} \leq CRITS \text{ and } DLAI_i > 0 \end{cases} \tag{41}$$

where LAI_i = leaf area index computed for day i

$DLAI_i$ = daily rate of change in the leaf area index for day i as computed in Equation 40 for i between m and n

CRITS = critical soil water content below which plant growth is stopped due to inadequate soil water

$$= WP + 0.1(FC - WP) \tag{42}$$

Example: Given the following typical LAI values, a LAI on day 109 of 1.60, and a soil water content greater than the critical soil water content for plant growth:

Date	LAI
60	0
80	1.0
100	1.7
120	2.3
140	2.8

LAI on day 110 would be:

$$LAI_{110} = LAI_{109} + DLAI_{110}$$
$$= 1.60 + \frac{(2.3 - 1.7)}{(120 - 100)}$$
$$= 1.63$$

The total evapotranspiration (ET) is equal to the sum of the evaporation from the soil (ES) and the plant transpiration (EP):

$$ET_i = \begin{cases} ES_i + EP_i & \text{when } (ES_i + EP_i) \leq (E_{o_i} - ESS_i) \\ E_{o_i} - ESS_i & \text{when } (ES_i + EP_i) > (E_{o_i} - ESS_i) \end{cases} \quad (43)$$

The evapotranspiration is distributed throughout the evaporative zone of the soil cover by the following equation (3):

$$ET_i(j) = ET_i \; W(j) \quad (44)$$

where

$ET_i(j)$ = evapotranspiration from segment j on day i, inches

$W(j)$ = weighting factor for segment j from Equation 14

This water extraction profile predicted by Equation 44 agrees very well with profiles measured for permanent grasses by Saxton, Johnson and Shaw (9). The depth of the extraction is the specified evaporative depth described previously. The thicknesses of the segments are the same as those used to determine the depth-weighted retention parameter for the SCS runoff curve number method.

Soil moisture storage

As water enters the soil, it contributes its volume to either evapotranspiration, storage, drainage, or percolation. In the HELP model, a daily time interval is used to evaluate the components of the water balance equation. In general terms, soil moisture storage is computed as follows:

$$SM_i = SM_{i-1} + 1/2 \; (IN_i - PE_i - ET_i + IN_{i-1} - PE_{i-1} - ET_{i-1}) \quad (45)$$

where

SM_i = soil moisture storage at midday i, inches

SM_{i-1} = soil moisture storage at midday i-1, inches

IN_i = infiltration during day i, inches

PE_i = percolation and drainage from landfill during day i, inches

ET_i = evapotranspiration during day i, inches

IN_{i-1} = infiltration during day i-1, inches

PE_{i-1} = percolation and drainage from landfill during day i-1, inches

ET_{i-1} = evapotranspiration during day i-1, inches

Soil water is distributed among as many as nine layers and among seven segments in the vegetative or evaporative zone. The model treats segments and layers in an equivalent manner, and considers the landfill as being composed of a minimum of seven segments and a maximum of sixteen segments (seven in the vegetative or evaporative plus one for each additional layer below this zone).

The model initially distributes the soil water as follows for a landfill composed of eight segments; seven segments in the vegetative zone plus a barrier soil layer:

For segment 1 (top)

$$SM_i(1) = SM_{i-1}(1) + 1/2 \left[DR_{i-1}(1) - DR_{i-1}(2) - ET_{i-1}(1) + DR_i(1) - DR_i(2) - ET_i(1)\right] \quad (46a)$$

where

$DR_i(1)$ = infiltration during day i, IN_i from Equation 20, inches

$DR_i(2)$ = drainage out of segment 1 and into segment 2 during day i, inches

$DR_{i-1}(1)$ = infiltration during day i-1, IN_{i-1}, inches

$DR_{i-1}(2)$ = drainage out of segment 1 and into segment 2 during day i-1, inches

For segment j; j = 2 to 6

$$SM_i(j) = SM_{i-1}(j) + 1/2 \left[DR_{i-1}(j) - DR_{i-1}(j+1) - ET_{i-1}(j) + DR_i(j) - DR_i(j+1) - ET_i(j)\right] \quad (46b)$$

For segment 7

$$SM_i(7) = SM_{i-1}(7) + 1/2 \left[DR_{i-1}(7) - PE_{i-1} - ET_{i-1}(7) + DR_i(7) - PE_i - ET_i(7)\right] \quad (46c)$$

For segment 8 (barrier)

$$SM_i(8) = SM_{i-1}(8) = FC(8) \quad (46d)$$

The model assumes that the soil moisture storage or content of a barrier layer always remains at field capacity but treats the layer as being saturated for computing percolation.

After distributing the water from the top to the bottom, the model checks the seven segments above the barrier soil to insure that the soil moisture storage of each segment does not exceed the saturated capacity or porosity. If it does, the storage is set equal to the saturated capacity and the excess is added to the soil moisture storage of the segment directly above. Any excess storage in the top segment is added to the surface runoff.

Vertical flow

The vertical flow submodel assumes that the soil profile consists of discrete segments that are homogeneous with respect to hydraulic conductivity, total porosity, and field capacity. The soil profile is broken into as many as three subprofiles or modeling units. The top subprofile is composed of the seven segments of the evaporative zone, as discussed previously in the sections on runoff and soil moisture storage, plus one segment for each soil layer between the evaporative zone and the top barrier soil layer, and one segment for the top barrier soil layer. The second subprofile consists of one segment for each soil layer between the top barrier soil layer and the second barrier soil layer plus one segment for the second barrier soil layer. The third subprofile is composed of one segment for each layer below the second barrier soil layer. The vertical flow submodel simulates vertical water routing and percolation through the top subprofile or modeling unit before repeating the process for the second and third subprofiles.

The rate of flow downward out of each segment is assumed to follow Darcy's Law.

$$q = k \frac{dh}{dl} \tag{47}$$

where

q = rate of flow, inches/day

k = hydraulic conductivity, inches/day

h = gravitational head, inches

l = length in the direction of flow, inches

Free outflow is assumed from each segment above the barrier soil layer and, therefore,

$$dh/dl = 1 \tag{48}$$

and

$$q = k \tag{49}$$

This assumption is reasonable as long as the hydraulic conductivities of the segments above the barrier soil layer are similar or increase with increasing depths of the segments.

The hydraulic conductivity used in Equations 47 and 49 is a function of soil moisture and varies from zero to the saturated hydraulic conductivity value, k_s. The unsaturated hydraulic conductivity, k_u, is defined by the following linear function of soil moisture:

$$k_u = k_s \ (SM_i - MDC)/(UL - MDC) \tag{50}$$

where

MDC = minimum soil water content, vol/vol, for drainage to occur

The minimum soil water content for drainage to occur is the field capacity for all soils below the evaporative depth and for all sands and gravels in the evaporative zone. For agricultural soils and clays in the evaporative zone, MDC is set to equal the field capacity when the profile is drying and to equal yesterday's soil water content but not greater than the field capacity when the profile is wetting.

Routing of moisture from segment to segment is accomplished by a storage routing procedure computed at the mid-point of the time interval. Mid-point routing was selected to obtain an accurate and efficient simulation of simultaneous incoming and outgoing drainage processes. The mid-point routing procedure tends to provide relatively smooth, gradual changes that resemble the actual flow process. This procedure avoids the more abrupt changes that result from applying the full amount of moisture to a segment at the beginning of the time step. The process is smoothed further by using time steps that are shorter than the period of interest.

Mid-point storage routing proceeds as follows. The drainage rate from segment j can be written as

$$DR_i(j + 1) = k_s(j) \ (SM_i(j)-MDC(j))/(UL(j)-MDC(j)) \tag{51}$$

$DR_i(j + 1)$ = drainage rate from segment j during time step i, inches/day

$SM_i(j)$ = soil moisture content of segment j at mid-point of the time step i, inches

This drainage rate can be computed from the equation of continuity.

$$\Delta S = \frac{I_1 + I_2}{2} - \frac{O_1 + O_2}{2} \tag{52}$$

where

ΔS = change in moisture storage in segment between mid-points of previous and present time steps, inches

I_1 = inflow to segment during previous time step, inches

I_2 = inflow to segment during present time step, inches

O_1 = outflow from segment during previous time step, inches

O_2 = outflow from segment during present time step, inches

Equation 52 may be rewritten in terms of soil moisture and drainage rates as follows:

$$SM_i(j) - SM_{i-1}(j) = 1/2\ [DR_i(j) + DR_{i-1}(j) - DR_i(j + 1) - DR_{i-1}(j + 1)] \tag{53}$$

The outflow drainage terms, DR(j + 1), of Equation 53 should each include a term for evapotranspiration. Therefore, the change in storage is written as

$$BAL_i(j) = [DR_i(j) - DR_i(j + 1) - ET_i(j)]\ DT \tag{54}$$

where

$BAL_i(j)$ = change in moisture storage in segment j during time step i, inches

$ET_i(j)$ = evapotranspiration rate from segment j during time step i, inches/day

DT = time step, days

Equation 53 may be rewritten as follows:

$$SM_i(j) = SM_{i-1}(j) + BAL_{i-1}(j)/2 + BAL_i(j)/2 \tag{55a}$$

or

$$SM_i(j) = SM_{i-1}(j) + BAL_{i-1}(j)/2 + DT\ [DR_i(j) - DR_i\ (j + 1) - ET_i(j)]/2 \tag{55b}$$

Equation 55b may be substituted into Equation 51 to solve simultaneously for drainage rate and soil moisture. The resulting drainage is

$$DR_i(j + 1) = 2k_s(j)\ [SM_{i-1}(j) + BAL_{i-1}(j)/2 + DR_i(j)DT/2 - ET_i(j)DT/2 - MDC(j)]/[2(UL(j)-MDC(j)) + k_s(j)DT] \tag{56}$$

Moisture routing proceeds sequentially from the top segment to the bottom segment, assuming free drainage at the bottom of each segment. An estimate of infiltration from the SCS runoff equation provides the inflow to the top segment, and an a priori estimate of drainage from the bottom segment of the subprofile is used to obtain a moisture balance in the bottom segment of the subprofile. The percolation from the barrier soil layer of one subprofile is used as the drainage into the next subprofile. Because drainage into a segment is dependent only on the segment above, a segment may receive more

moisture than it can hold. If the moisture content of a segment is greater than its total porosity, the excess moisture is added to the segment above it. In this way, the moisture contents of segments are corrected by backing up water from bottom to top. If the entire profile becomes saturated, any excess moisture at the surface is added to the runoff for the day.

After the moisture content of each segment is corrected for excess water content, the total head or thickness of the water column in the profile is computed by comparing segment moisture contents with their corresponding total porosities. The head computation begins at the bottom of the profile. Total head (TH) in inches is computed as

$$TH = \sum_{j=m}^{n} TS(j)\ [(SM(j) - FC(j))/(UL(j) - FC(j))] \tag{57}$$

where

TS(j) = thickness of the segment j, inches

The heads computed within consecutive segments are accumulated from the lowest segment above the barrier soil layer, n, of the subprofile. When a segment, m, that is not saturated is encountered while moving up the subprofile, TH is set equal to the accumulated head.

The percolation through a barrier soil layer is also computed using Darcy's Law as given in Equation 47 where

$$\frac{dh}{dl} = \frac{TH + TS(n+1)}{TS(n+1)} \tag{58}$$

and

TS(n+1) = thickness of the barrier soil layer, inches

Therefore,

$$QPERC = k_s(n+1)\ \frac{TH + TS(n+1)}{TS(n+1)} \tag{59}$$

where

QPERC = percolation rate through the barrier soil layer, inches/day

Lateral Flow

The lateral drainage submodel is based on the Boussinesq equation which may be written as

$$f\ \frac{\partial h}{\partial t} = K\ \frac{\partial}{\partial x}\ [(h - x\alpha)\ \frac{\partial h}{\partial x}\ ] + R, \tag{60}$$

where

f = dimensionless drainable porosity
t = time, days
h = gravitational head, inches
K = effective saturated lateral hydraulic conductivity, inches/day
x = lateral position in the direction of drainage, inches
σ = dimensionless slope
R = recharge flux perpendicular to lateral flow, inches/day

The recharge flux is equal to the infiltration rate less the evapotranspiration rate.

For application in the lateral drainage submodel, a steady-state assumption,

$$\frac{\partial h}{\partial t} = 0 \tag{61}$$

is used. This assumption is justified if the time step is selected sufficiently short so that there is little change in head. With the steady-state assumption, Equation 60 reduces to

$$\frac{d}{dx}\left(y \frac{dh}{dx}\right) = -R/K \tag{62}$$

where

y = thickness of water profile at x, inches

$= h - \sigma x$

The boundary conditions are

$$h = 0 \text{ at } x = 0 \tag{63a}$$

$$\frac{dh}{dx} = 0 \text{ at } x = L \tag{63b}$$

where

L = lateral distance from the crest to the drain, inches

Equation 62 was linearized by Skaggs (6) to the following form:

$$QLAT = \frac{2K\bar{y}(y_o + \sigma L)}{L^2} \tag{64}$$

where

y_o = thickness of water profile above barrier soil at crest, inches

$\bar{y}$ = average thickness of water profile above barrier soil layer between x = 0 and x = L, inches

QLAT = lateral drainage rate, inches/day

The lateral hydraulic conductivity of a multilayered subprofile is computed as follows:

$$K = \frac{\sum_{j=n}^{m} k_s(j)\ d(j)}{\sum_{j=n}^{m} d(j)} \tag{65}$$

where

d(j) = thickness of saturated soil in segment j, inches

n = number of segment directly above barrier soil layer

m = number of segment containing the surface of the saturated soil or top of the water profile in the soil subprofile

Although Skaggs (6) used an elliptical profile in the linearization of Equation 62, the shape of the profile deviates from an ellipse as $\bar{y}$, L, and σ vary. To provide accurate estimates of lateral drainage rate for σ in the range of 0 to 10 percent, L from 25 ft to 200 ft, and $\bar{y}$ as large as five feet, a correction factor was developed to adjust Equation 64 to agree with numerical solutions of the Boussinesq equation (Equation 60). With the correction factor, Equation 64 may be written as

$$QLAT = \frac{2C_1\ K\bar{y}\ (y_o + \sigma L)}{L^2} \tag{66}$$

where

$$C_1 = 0.510 + 0.00205\sigma L \tag{67}$$

and

L = drainage distance, inches

The variable, y_o, is unknown during the simulation; therefore, a relationship between $\bar{y}$ and y_o was developed of the following form:

$$y_o = C_2\ \bar{y} \tag{68}$$

where

$$C_2 = \left(\frac{\bar{y}}{\alpha L}\right)^{0.16} \tag{69}$$

Therefore, the final form of Equation 64 is

$$QLAT = \frac{2\ (0.510 + 0.00205\ \alpha L)\ K\bar{y}\left(\bar{y}\left(\frac{\bar{y}}{\alpha L}\right)^{0.16} + \alpha L\right)}{L^2} \tag{70}$$

Linkage Between Vertical and Lateral Flow Submodels

Two assumptions are used to link the vertical and lateral flow submodels:

1) The steady-state assumption that change in head is not a function of time and

2) That the drainage rate estimated at the mid-point of the time interval is effective throughout the time interval.

For these assumptions to hold, the computational time interval must be sufficiently small so there is little change in head. Because the magnitude of change in head with time ($\partial h/\partial t$) increases with increasing head, as shown in Figure 5, the computational time step in the model is set to provide acceptable accuracy for most of the expected values of head. The accuracy of estimating percolation is not very sensitive to the size of time step because the percolation rates at higher heads are smaller than the lateral drainage rates and because the higher heads last for much shorter periods of time than the lower heads. Therefore, acceptable time steps for lateral drainage are also acceptable for percolation. As shown in Figure 5, four equal time steps per day yield acceptable accuracy for heads less than 30 inches.

The second assumption, that the drainage rate at the midpoint of the time step is applicable throughout the time step, is also dependent on selecting a time step that is sufficiently small. As shown in Figure 6, nonlinearity is not a problem when the time step is less than one day.

Convergence Scheme

The drainage rate from the bottom of the profile must be equal to the sum of lateral flow and vertical percolation. The two flow submodels are aligned by an iterative procedure that works as follows:

1) An *a priori* estimate of the drainage rate from the bottom profile segment is obtained; on the first iteration this is estimated to be the drainage rate from the previous time step.

2) A moisture balance is computed for each profile segment.

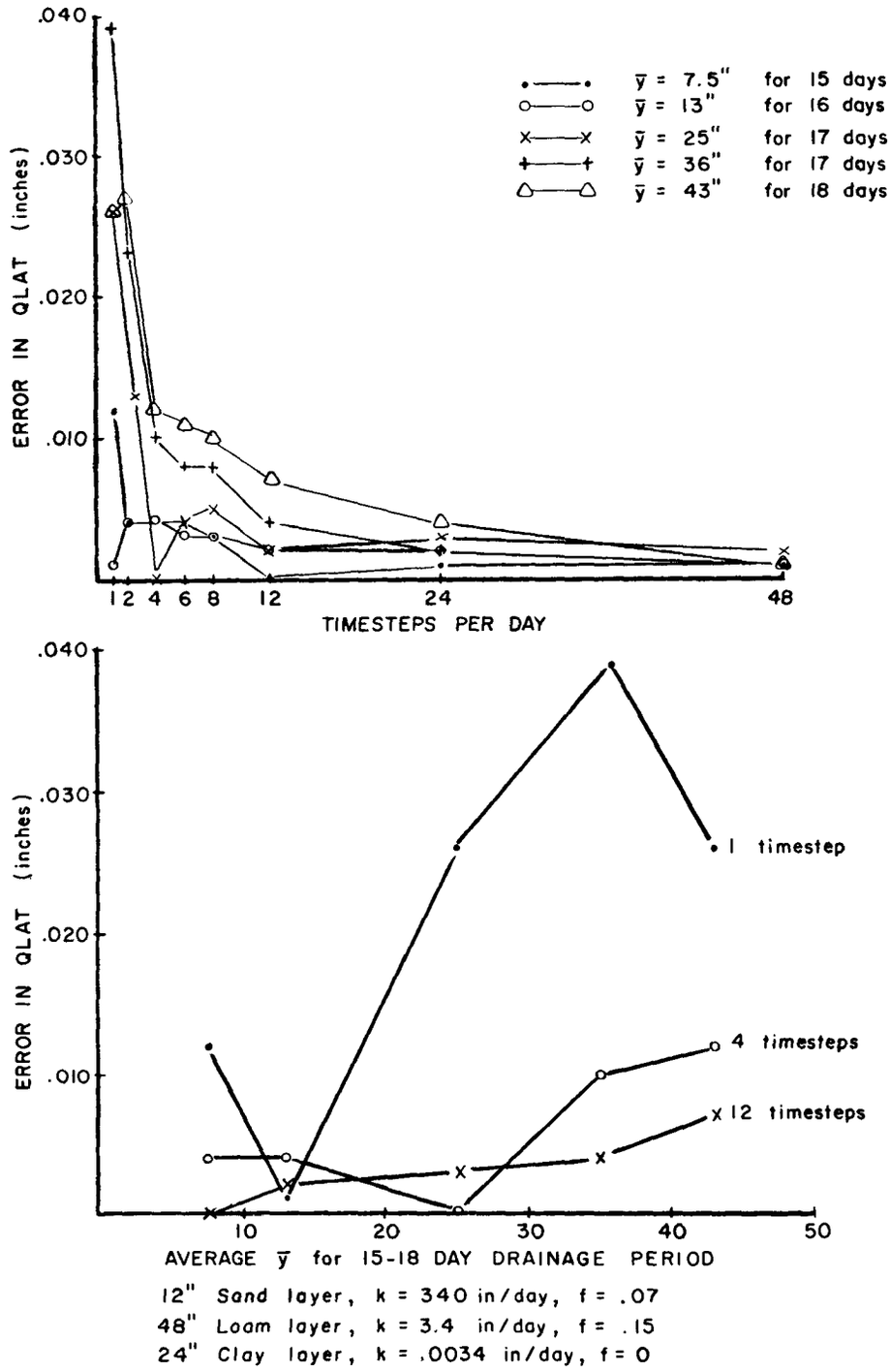

Figure 5. Error in lateral drainage computation as a function of interval period and head.

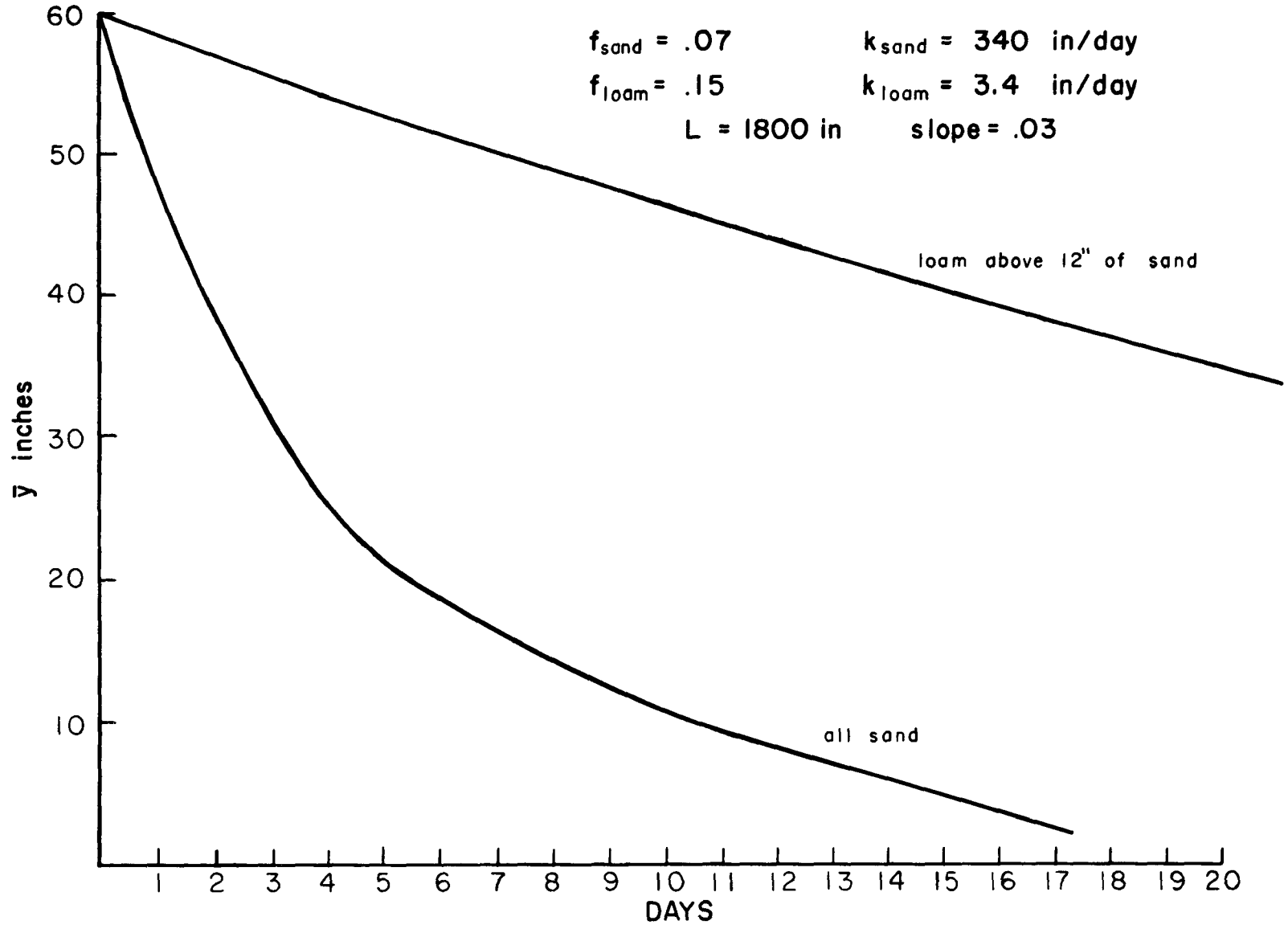

Figure 6. Extent of nonlinearity in drainage curves.

3) The average head for the profile ($\bar{y}$) and the effective lateral conductivity K are computed.

4) Lateral flow and percolation through the barrier layer are computed, and

5) If the sum of lateral flow and vertical percolation is not acceptably close (± 5 percent) to the initial estimate of drainage rate used in step 1, a new estimate is obtained, and the new estimate of drainage rate is returned to step 1. If the convergence criterion is met, summaries are obtained and computation begins on the next time step.

The new estimate of drainage rate, referred to in step 5, is obtained by comparing the previous estimate with the computed value for the sum of lateral flow and percolation. If the computed rate is too high, it is used as the top of an acceptable range of values, and it is averaged with the previous low estimate. If the computed value is too low, it is taken as the bottom of the range and is averaged with the previous high estimate. In this way, the best estimate is approached from one side at a time. When consecutive estimates are acceptably close (<5 percent), the iteration is ended.

LIMITATIONS, ASSUMPTIONS, AND CONSTANTS

The HELP model is a deterministic, quasi-two dimensional model that develops a long-term water balance based on historical or simulated daily rainfall records. The HELP model is no more complex than a manual tabulation of moisture balance, but the HELP model makes available a more complete data base and a state-of-the-art system for computing an accurate water budget over a wide variety of climatic, soil, and vegetative conditions. Infiltration of water through the soil surface is calculated using the SCS runoff curve number technique. The SCS technique relates runoff to soil type, land use, soil slope, and management practices using daily rainfall records. The actual rainfall intensity, duration, and distribution are not considered. Factors such as slope and surface roughness, which would be important if individual rainfall or storm events were used, are considered in the context of the land use/land management factors used in the selection of the SCS runoff curve number. The SCS technique developed for watersheds and large plots of land is assumed to provide good estimates of infiltration for landfills. The retention parameter, S, used to calculate the runoff curve number, can be computed from a depth-weighted average of soil moisture in the soil profile.

The evapotranspiration submodel is based on a modified Penman relationship which relates evapotranspiration to the available energy based on daily temperature and daily solar radiation. The model does not use actual daily temperature and solar radiation values; instead, mean daily temperature and solar radiation values interpolated from mean monthly temperature and solar radiation data are used. Similarly, daily leaf area indices, the other main variable controlling evapotranspiration, are interpolated from 13 values scattered throughout the year. Consequently, calculated daily evapotranspiration

values may be quite different from actual daily values. However, computed and actual monthly and annual totals of the daily evapotranspiration should be similar.

The vertical water routing, percolation, and lateral drainage submodels contain several assumptions. Drainable volume of water in soil can be defined by an estimate of field capacity and total porosity. Drainable soil water, that in excess of field capacity, drains freely through the soil profile at a rate defined by Darcy's Law with a hydraulic gradient equal to one and a hydraulic conductivity that is a function of soil moisture content. The unsaturated hydraulic conductivity is assumed to be a linear function of soil moisture between total porosity and minimum storage capacity for drainage. Because Darcy's Law is assumed, there can be no direct channels to quickly route water vertically from the surface to the water table. Water in excess of the total porosity of a segment is assumed to belong to the segment above. Excess water from the top segment is added to the surface runoff for the time step. Vertical routing, lateral drainage, and percolation through a barrier soil layer occur at a uniform rate through the time step. Equal amounts of infiltration and evapotranspiration occur in each time step within a day. The lateral drainage and vertical percolation are assumed to be at steady-state, i.e., head is constant during a time step. The approximation to the Boussinesq equation developed by Skaggs (6) for the range of design specifications for landfills is assumed to estimate lateral drainage adequately when used with appropriate correction factors. Barrier soil layers remain saturated and percolation through barrier soil layers is not restricted or aided by segments below the barrier soil.

The model uses several simplifying assumptions and assigns constants for several variables. Table 1 contains the constants used in modeling the hydrologic processes. Table 2 lists the variables which are assigned values when default soil data input is used. Correction factors, which adjust the default hydraulic conductivity of the top layer for the various vegetation types, are also listed in Table 2. Table 2 also contains the coefficients that are used to calculate the default runoff curve numbers as a function of vegetation. The model assumes that vegetation has no other effects on the soil characteristics, such as porosity, field capacity, and wilting point. The model also assumes that surface runon does not occur, and that the water table is below the landfill. The model does not simulate the effects of aging on the landfill system and, therefore, the simulation run demonstrates the range and frequency of results for a given condition of the landfill. When using an impermeable liner, a leakage fraction is used by permitting only that fraction of the potential daily percolation through a barrier soil layer to actually percolate on that day. This use of leakage fraction is identical to the effect of reducing the hydraulic conductivity of the barrier soil. Typical leaf area indices used in the default climatological data for excellent grass and a good row crop are listed in Table 3. Winter cover factors and correction factors for poorer stands of vegetation are also given in Table 3.

TABLE 1. CONSTANTS USED IN HELP MODEL

Constant	Value Used	Functions
AB	0.2 S	The initial abstraction for SCS curve number method accounts for losses of water (interception) before infiltration or runoff occurs, where S is the retention parameter.
SWUL(j)	$\frac{WP(j) + FC(j)}{2}$ for $j \leq 7$ FC(j) for $j > 7$	The initial soil water content of the top seven segments is assumed to be halfway between the wilting point and the field capacity. The soil water contents of all other segments start at field capacity.
CRITS	WP + 0.1 AWC	The soil water content below which plant growth is stopped is assumed to be the wilting point plus one-tenth of the plant available water capacity.
GMA	0.68	The psychrometric constant is used in computing evapotranspiration.
ALB	0.23	The albedo for solar radiation is used in computing evapotranspiration.

TABLE 2. SOIL VARIABLES FOR DEFAULT SOIL DATA INPUT

Variables	Functions
XRC(KSOILn) XPOROS(KSOILn) XCON(KSOILn) XFC(KSOILn) XMIR(KSOILn) XWP(KSOIL)	These six variables are taken directly from Table 10 according to the soil type (KSOILn) selected for layer n Where XRC = hydraulic conductivity XPOROS = porosity XCON = evaporation coefficient XFC = field capacity XMIR = minimum infiltration rate XWP = wilting point
RC(n) = XRC(KSOILn)/20 CON(n) = 3.1 PORO(n) = 0.75 XPOROS(KSOILn) FC(n) = 0.75 XFC(KSOILn) + 0.25 XWP(KSOILn)	These four variables are affected when soil layer n is compacted Where RC(n) = hydraulic conductivity of layer n CON(n) = evaporation coefficient of layer n PORO(n) = porosity of layer n FC(n) = field capacity of layer n
CORECT(KVEG)	This factor corrects RC(1) for vegetation in the vegetative layer of the soil cover. The hydraulic conductivity RC(1) becomes the effective hydraulic conductivity when multiplied by the appropriate coefficient for the vegetation type, KVEG, which is 1.0, 5.0, 4.2, 3.0, 1.8, 1.9, and 1.5 for bareground, excellent grass, good grass, fair grass, poor grass, good row crop, and fair row crop, respectively.
XAO(KVEG) XA1(KVEG) XA2(KVEG)	These three variables are coefficients used to calculate the SCS curve number as follows: CN-AMC II = XAO(KVEG) + XA1(KVEG) XMIR(KSOIL1) + XA2(KVEG) $[XMIR(KSOIL1)]^2$

KVEG	XAO	XA1	XA2
1	97.14	-23.57	-50.00
2	81.49	-58.96	-144.76
3	89.90	-32.92	-68.05
4	90.01	-43.12	-48.33
5	92.18	-25.11	-58.93
6	84.75	-36.45	-156.30
7	93.36	-19.21	-67.86

TABLE 3. CLIMATOLOGIC CHARACTERISTICS FOR DEFAULT INPUT

Portion of Growing Season	LAI of Actively Transpiring Vegetation	
	Excellent Grass	Good Row Crop
0.0	0.00	0.00
0.1	1.84	0.15
0.2	3.00	0.40
0.3	3.00	2.18
0.4	3.00	2.97
0.5	3.00	3.00
0.6	3.00	2.96
0.7	2.70	2.92
0.8	1.96	2.30
0.9	0.96	1.15
1.0	0.50	0.50

	Winter Cover Factors, GR					
	Excellent Grass	Good Grass	Fair Grass	Poor Grass	Row Crops	Bareground
Winter	1.8	1.2	0.6	0.3	0.0	0.0

Note: XGR is a factor to correct the LAI values for poorer stands of vegetation. The above values are multiplied by 1.0, 0.67, 0.33, 0.17, 1.0, 0.5, and 0.0 for excellent grass, good grass, fair grass, poor grass, good row crop, poor row crop, and bareground, respectively.

SECTION 3

PROGRAM DOCUMENTATION

PROGRAM CAPABILITIES AND DATA INPUT

The HELP model is a quasi-two-dimensional, deterministic, computer-based water budget for landfills. The model performs a daily sequential analysis to estimate runoff, evapotranspiration, lateral drainage, percolation, and water storage from daily precipitation data. The model can handle water routing through or storage in up to nine soil or waste layers; as many as three of the layers may be barrier soil or restrictive layers. The simulation period can range from 2 to 20 years.

The model has limits on the order that layers can be arranged in the landfill profile. As discussed in Section 2, each layer must be described as being one of four types: vertical percolation, lateral drainage, waste, and barrier soil. The model does not permit a vertical percolation layer or a waste layer to be placed below a lateral drainage layer. A barrier soil layer may not be placed directly below another barrier soil layer. The top layer may not be a barrier soil layer. If a barrier soil layer is not placed directly below the lowest lateral drainage layer, the lateral drainage layers in the lowest subprofile are treated by the model as vertical percolation layers. No other restrictions are placed on the order of the layers.

The lateral drainage equation was developed for the expected range of hazardous waste landfill design specifications. Permissible ranges for slope and maximum drainage length of the drainage layer are 0 to 10 percent and 25 to 200 feet. Accurate estimates of the lateral drainage rate were obtained for heads up to 5 feet on the base of the drainage layer or on the top of the barrier layer.

Several other design variables have limits for the values which may be specified. The SCS runoff curve number for AMC-II can range between 20 and 100. SCS runoff curve numbers may be selected by the procedures outlined in the National Engineering Handbook (4). The liner leakage fraction and the fraction of potential runoff for open sites can range between 0 and 1.

Several relationships must exist between the soil characteristics of a layer and of the soil subprofile. The porosity, field capacity, and wilting can theoretically range from 0 to 1 in units of volume per volume, but the porosity must be greater than the field capacity and the field capacity must be greater than the wilting point. The relation between soil type and soil characteristics is shown in Figure 7. Typical values for various soils are listed in Table 10 which contains the default soil characteristics (14, 15, 16).

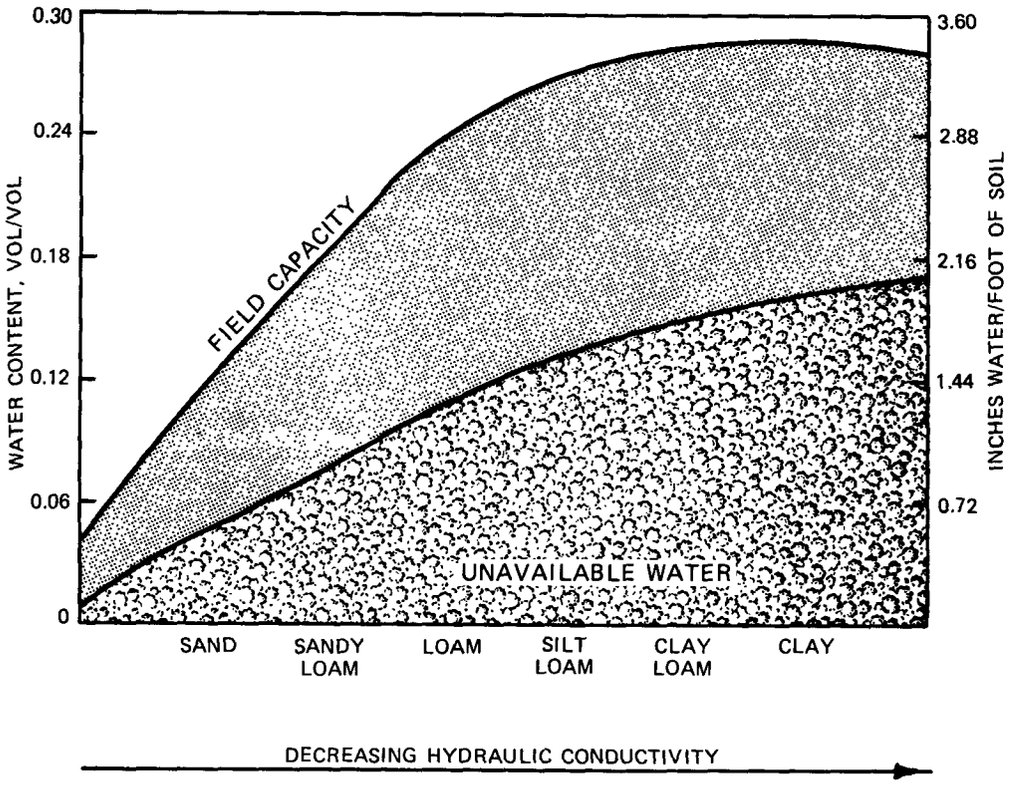

Figure 7. General relation between soil-water, soil texture, and hydraulic conductivity (14).

The hydraulic conductivities of the layers of a subprofile above a barrier soil layer should increase with increasing depth or at worst be similar (within an order of magnitude) to the layers above. The evaporation or water transmissivity coefficient ranges from 3.1 mm/day$^{0.5}$ for compacted soils of low transmissivity to 3.3 for sands to about 5.5 for highly organic soils (3, 7). The coefficient must be greater than 3 mm/day$^{0.5}$. Several of the soil characteristics for some layers are not used by the model; these include the porosity, wilting point, and evaporation coefficient of barrier soil layers, and the wilting point and evaporation coefficients of all layers below the evaporative zone.

The only climatologic variables that have limited ranges of values are the leaf area index and winter cover factor. Leaf area indices may range from 0 to 3 where zero is bareground and three represents the maximum possible vegetative cover. The leaf area index is the ratio of the leaf area of vegetation to the soil surface area. Typical leaf area indices for various vegetative covers are listed in Tables 3 and 4 (3). The annual leaf area index distributions in the tables are normalized by the growing season at the location of interest. Typical growing seasons are available in various references including the U.S. Department of Agriculture publication, "Climate and Man, Yearbook of Agriculture" (17). The winter cover factor is defined in terms of leaf area index.

TABLE 4. TYPICAL LEAF AREA INDEX DISTRIBUTIONS FOR VARIOUS VEGETATIVE COVERS

Portion of Growing Season	LAI*				
	Corn	Oats	Wheat	Grass	Soybeans
0.0	0.00	0.00	0.00	0.00	0.00
0.1	0.09	0.42	0.47	1.84	0.15
0.2	0.19	0.84	0.90	3.00	0.40
0.3	0.23	0.90	0.90	3.00	2.18
0.4	0.49	0.90	0.90	3.00	2.97
0.5	1.16	0.98	0.90	3.00	3.00
0.6	2.97	2.62	1.62	3.00	2.96
0.7	3.00	3.00	3.00	2.70	2.92
0.8	2.72	3.00	3.00	1.96	2.30
0.9	1.83	3.00	0.96	0.96	1.15
1.0	0.00	0.00	0.00	0.50	0.50

* LAI values for good crops and excellent grass stands.
Extracted: from Knisel (3).

Sources for other climatologic variables are readily available. Precipitation and temperature data are available from local libraries and from the National Weather Service through the Director of the National Climatic Center, NOAA, Federal Building, Asheville, N.C. 28801. Mean monthly solar radiation (insolation) values can be obtained from the "Climatic Atlas of the United States" (18) and from Table 2 of the HSSWDS User's Guide (1) for selected cities.

PROGRAM OPTIONS

The program has options only in the input and output routines. Climatologic data and soil characteristics may be specified by the user or selected from default data bases. Several other options are also available in the input routines as will be discussed below. Design data must be specified by the user. The optional output routines provide summaries of daily values, monthly totals and annual totals of various simulation variables. Average monthly and annual totals, and peak daily values are produced for all simulations.

Input Options

Climatologic data may be specified by either manual or default options. Five years of default precipitation data are available for 102 cities, as are one set of monthly mean temperatures and solar radiation, winter cover factor, and leaf area indices for each city. This set of climatologic data, other than precipitation, is used for each of the five years of precipitation data. If the manual option is used, the user has the option of supplying one set of any climatologic variable except precipitation which would be used for all years of simulation, or the user can specify a separate set of values for each year of simulation. The manual option also provides the user with optional routines to check or correct the values previously specified. The user does not need to enter the years of precipitation data in chronological order since the program sorts the years and arranges them in increasing chronological order. The program skips over years without data during the simulation.

Soil characteristics may also be specified by either manual or default options. With both options the design data are specified by the user. In the default option the user may override the default runoff curve number by specifying a curve number. The manual soil characteristics input option provides the user with routines to check or correct previously specified values or previously selected values from the default data base.

Output Options

Four types of output can be obtained from the program: daily values, monthly totals, annual totals, and a summary of the simulation. Output of daily values is optional and includes date, indicator for freezing temperatures, precipitation, runoff, evapotranspiration, total lateral drainage from all drainage layers in the cap or cover, percolation from the base of the cover, head on top of the barrier soil layer at the base of the cover, total lateral drainage from all drainage layers in the waste cell and liner/drain

system at the base of the landfill, percolation from the base of the landfill, head on top of the barrier soil layer at the base of the landfill, and soil water content of the evaporative zone. Output of monthly totals is also optional. The totals of the daily values for each month are given for the following variables: precipitation, runoff, evapotranspiration, lateral drainage from each subprofile, and percolation through the bottom of each subprofile. Output of daily values and monthly totals are output options only when detailed output is requested. Detailed ouput always includes annual totals of the variables listed for monthly output and a summary. The summary of the simulation is always produced, and includes monthly and annual averages, and peak daily values for the variables listed for the optional output along with several other variables. The variables are described later in this section of the documentation.

INPUT VARIABLES

Three types of input are used in the model: climatologic, soil, and design data. Tables 5 and 7 list the climatologic input variables for the manual and default options, respectively. The manual and default input variables for soil characteristics are given in Tables 8 and 9, respectively, and Table 10 lists the design variables. The HELP User's Guide (19) provides a more complete discussion of input requirements.

Manual Climatologic Input

Climatologic variables are shown in Table 5. The user may specify from 2 to 20 years of daily precipitation values, one year for each year of simulation desired. Twelve monthly mean temperatures and twelve monthly mean solar radiation values may be specified for one year or each year of simulation. Thirteen leaf area indices, the corresponding Julian dates, and a winter cover factor may also be specified for one year or each year of simulation. Only one evaporative zone depth may be specified for the simulation.

Default Climatologic Input

The model stores default climatologic data for 102 cities. By specifying the desired state and city from Table 6, the user is supplied daily precipitation data for years 1974 through 1978, one set of monthly mean temperature and solar radiation values, and sets of leaf area indices and winter cover factors for a good row crop and an excellent stand of grass. Actual leaf area indices and winter cover factor used during the simulation are selected or corrected from the default sets after the vegetation type is specified; the correction factors are given in Table 3. The input variables are summarized in Table 7.

Manual Soil Data Input

Soil characteristics must be specified for each layer in the design. The required characteristics, listed in Table 8, include porosity, field capacity, wilting point, evaporation coefficient, and hydraulic conductivity.

TABLE 5. MANUAL CLIMATOLOGIC INPUT

Variables	Functions
NYEAR	The year of the precipitation data to be entered.
RAIN(I,J,K)	The daily precipitation values in inches where I is the number of the year of data being entered (between 1 and 20), J is the line number for the year of data being entered (between 1 and 37), and K is the number of the value on the line of data being entered (between 1 and 10).
TEMP(M)	The monthly mean temperatures in degrees Fahrenheit where M is the number of the month (between 1 and 12).
RADI(M)	The monthly mean solar radiation values in langleys where M is the number of the month (between 1 and 12).
GR	The winter cover factor.
LDAY13(K)	The Julian date of the leaf area index values where K is the number of the value (between 1 and 13).
XLAI13(K)	The leaf area index value where K is the number of the value (between 1 and 13).
RDEPTH	The evaporative zone depth in inches.

TABLE 6. LISTING OF DEFAULT CITIES AND STATES

Default Data is Provided Only for the Following Cities and States

Alaska
- Annette
- Bethel
- Fairbanks

Arizona
- Flagstaff
- Phoenix
- Tucson

Arkansas
- Little Rock

California
- Fresno
- Los Angeles
- Sacramento
- San Diego
- Santa Maria

Colorado
- Denver
- Grand Junction

Connecticut
- Bridgeport
- Hartford
- New Haven

Florida
- Jacksonville
- Miami
- Orlando
- Tallahassee
- Tampa
- W. Palm Beach

Georgia
- Atlanta
- Watkinsville

Hawaii
- Honolulu

Idaho
- Boise
- Pocatello

Illinois
- Chicago
- E. St. Louis

Indiana
- Indianapolis

Iowa
- Des Moines

Kansas
- Dodge City
- Topeka

Kentucky
- Lexington

Louisiana
- Lake Charles
- New Orleans
- Shreveport

Maine
- Augusta
- Bangor
- Caribou
- Portland

Massachusetts
- Boston
- Plainfield
- Worcester

Michigan
- E. Lansing
- Sault Ste. Marie

Minnesota
- St. Cloud

Missouri
- Columbia

Montana
- Glasgow
- Great Falls

Nebraska
- Grand Island
- North Omaha

Nevada
- Ely
- Las Vegas

New Hampshire
- Concord
- Nashua

New Jersey
- Edison
- Seabrook

New Mexico
- Albuquerque

New York
- Central Park
- Ithaca
- New York City
- Schenectady
- Syracuse

North Carolina
- Greensboro

North Dakota
- Bismarck

Ohio
- Cincinnati
- Cleveland
- Columbus
- Put-in-Bay

Oklahoma
- Oklahoma City
- Tulsa

Oregon
- Astoria
- Medford
- Portland

Pennsylvania
- Philadelphia
- Pittsburgh

Rhode Island
- Providence

South Carolina
- Charleston

South Dakota
- Rapid City

Tennessee
- Knoxville
- Nashville

Texas
- Brownsville
- Dallas
- El Paso
- Midland
- San Antonio

Utah
- Cedar City
- Salt Lake City

Vermont
- Burlington
- Montpelier
- Rutland

Virginia
- Lynchburg
- Norfolk

Washington
- Pullman
- Seattle
- Yakima

Wisconsin
- Madison

Wyoming
- Cheyenne
- Lander

Puerto Rico
- San Juan

TABLE 7. DEFAULT CLIMATOLOGIC INPUT VARIABLES

Variable	Function
KCITY	The name of a city given in Table 6.
KSTATE	The name of a state given in Table 6.
KVEG	The vegetation type (between 1 and 7).
RDEPTH	The evaporative zone depth in inches.

TABLE 8. MANUAL SOIL CHARACTERISTICS INPUT

Variable	Function
PORO(ILAY)	The porosity of soil layer ILAY in vol/vol where ILAY is the number of the layer from the top (between 1 and 9).
FC(ILAY)	The field capacity of soil layer ILAY in vol/vol.
WP(ILAY)	The wilting point of soil layer ILAY in vol/vol.
RC(ILAY)	The saturated hydraulic conductivity of soil layer ILAY in inches/hr.
CON(ILAY)	The evaporation coefficient of soil layer ILAY in $mm/day^{0.5}$.

Default Soil Data Input

The default soil characteristics are listed in Table 9. The only variable used to obtain default soil characteristics is the number of the soil type or texture. Default soil characteristics are provided for 21 textures. The numbered soil textures, labeled KSOIL in the program, and their corresponding soil characteristics are listed in Table 10. Soil texture numbers 22 and 23 are used to specify characteristics manually.

Design Data Input

The design variables given in Table 11 describe the landfill system. These variables include the number of layers, the thickness of each layer, a descriptor for each layer, the slope and maximum drainage distance at the base of each drainage system, and the total surface area of the landfill. Three other design variables may also be required: the SCS runoff curve number for antecedent moisture condition II, the liner leakage fraction, and the open waste cell potential runoff fraction. The SCS runoff curve number is optional for default soil characteristics input except when the waste cell is open; the curve number is required for manual input of soil characteristics. The liner leakage fraction must be specified whenever a synthetic liner is used in the design. The potential runoff fraction for open sites is used when the top layer is a waste layer.

OUTPUT VARIABLES

The output is composed of input information and simulation results. All of the input data except daily precipitation values are always reported; daily precipitation values are printed only when the daily output option is used. This section presents only a discussion of output variables for simulation results.

Daily Output

The variables for daily output are listed in Table 12. All of these variables, except precipitation, are computed daily. Daily values for precipitation, runoff, evapotranspiration, percolation, and drainage are used to compute the monthly and annual totals. Due to the limited number of variables which can be printed across a page, daily values of drainage and percolation from each subprofile are not always printed for each simulation. Lateral drainage values for all subprofiles completely above the top waste layer are totaled and called cover drainage; lateral drainage values from all other subprofiles are also totaled and reported as base drainage. Percolation values are given only for subprofiles containing either the base of the cover or the base of the landfill. These two percolation values represent the daily amounts of percolation through the base of the cover and through the base of the landfill. Only two heads are reported; the heads on barrier layers at the base of the cover and at the base of the landfill.

TABLE 9. DEFAULT SOIL CHARACTERISTICS INPUT

Variable	Function
KSOIL(ILAY)	The soil texture number (between 1 and 23) for soil layer ILAY where ILAY is the number of the layer from the top (between 1 and 9).
PORO(ILAY)	The user-specified porosity of soil layer ILAY in vol/vol for soil textures 22 and 23.
FC(ILAY)	The user-specified field capacity of soil layer ILAY in vol/vol for soil textures 22 and 23.
WP(ILAY)	The user-specified wilting point of soil layer ILAY in vol/vol for soil textures 22 and 23.
RC(ILAY)	The user-specified hydraulic conductivity of soil layer ILAY in inches/hr for soil textures 22 and 23.
CON(ILAY)	The user-specified evaporation coefficient of soil layer ILAY in $mm/day^{0.5}$ for soil textures 22 and 23.

TABLE 10. DEFAULT SOIL CHARACTERISTICS

Soil Texture Class HELP	USDA	USCS	MIR* in/hr	Porosity Vol/Vol	Field Capacity Vol/Vol	Wilting Point Vol/Vol	Hydraulic Conductivity in/hr	CON** $mm/day^{0.5}$
1	CoS	GS	0.500	0.351	0.174	0.107	11.95	3.3
2	CoSL	GP	0.450	0.376	0.218	0.131	7.090	3.3
3	S	SW	0.400	0.389	0.199	0.066	6.620	3.3
4	FS	SM	0.390	0.371	0.172	0.050	5.400	3.3
5	LS	SM	0.380	0.430	0.160	0.060	2.780	3.4
6	LFS	SM	0.340	0.401	0.129	0.075	1.000	3.3
7	LVFS	SM	0.320	0.421	0.176	0.090	0.910	3.4
8	SL	SM	0.300	0.442	0.256	0.133	0.670	3.8
9	FSL	SM	0.250	0.458	0.223	0.092	0.550	4.5
10	VFSL	MH	0.250	0.511	0.301	0.184	0.330	5.0
11	L	ML	0.200	0.521	0.377	0.221	0.210	4.5
12	SIL	ML	0.170	0.535	0.421	0.222	0.110	5.0
13	SCL	SC	0.110	0.453	0.319	0.200	0.084	4.7
14	CL	CL	0.090	0.582	0.452	0.325	0.065	3.9
15	SICL	CL	0.070	0.588	0.504	0.355	0.041	4.2
16	SC	CH	0.060	0.572	0.456	0.378	0.065	3.6
17	SIC	CH	0.020	0.592	0.501	0.378	0.033	3.8
18	C	CH	0.010	0.680	0.607	0.492	0.022	3.5
19	Waste		0.230	0.520	0.320	0.190	0.283	3.3
20	Barrier Soil		0.002	0.520	0.450	0.360	0.000142	3.1
21	Barrier Soil		0.001	0.520	0.480	0.400	0.0000142	3.1

* MIR = Minimum Infiltration Rate

** CON = Evaporation Coefficient

TABLE 11. DESIGN DATA INPUT

Variable	Function
LAY	The number of soil layers.
THICK(ILAY)	The thickness of soil layer ILAY in inches where ILAY is the number of the layer from the top (between 1 and 9.
LAYER(ILAY)	The descriptor of soil layer ILAY (between 1 and 5).
FLEAK	The leakage fraction through the synthetic liner (between 0 and 1).
FRUNOF	The potential runoff fraction for open sites (between 0 and 1).
CN2	The SCS runoff curve number for antecedent moisture condition II (between 20 and 100) (optional if default soil characteristics are used).
TAREA	The surface area of the landfill in square feet.
SLOPE(ILAY)	The slope at the base of soil layer ILAY in percent.
XLENG(ILAY)	The maximum drainage distance at the base of soil layer ILAY in feet.

TABLE 12. DAILY OUTPUT VARIABLES

Variable	Function
IDA	The Julian date.
NSTAR	An indicator that the mean temperature is below 32°F.
PRE(IDA)	The daily precipitation value in inches.
RUN	The daily runoff in inches.
ETT	The daily evapotranspiration in inches.
CHED	The head on the base of the cover in inches.
CPRC	The percolation through the base of the cover in inches.
CDRN	The lateral drainage from the cover in inches.
BHED	The head on the base of the landfill in inches.
BPRC	The percolation through the base of the landfill in inches.
BDRN	The lateral drainage beneath the cover of the landfill in inches.
SW	The soil water content in the evaporative zone in vol/vol.

Monthly Totals

Daily values for the variables listed in Table 13 are totaled for each month to show monthly effects on the water budget. These values are averaged by month for all years of simulation. The output of each year of monthly totals is optional.

Annual Totals

Daily values for the variables listed in Table 14 are totaled for each year to show yearly effects on the water budget. Several variables are also reported to permit computation of the change in water storage in the landfill profile and to check that all of the water added to the profile has been accounted. The water budget check should equal zero if all computations were performed precisely. The percent values are computed as the percent of the annual precipitation. The reported annual totals are averaged with the totals of the other years of simulation to obtain the average results of the simulation.

Averages

The averaged monthly and annual totals of water budget components reported by the program are listed in Table 15. The values are obtained by computing the arithmetic mean of totals from the various years of simulation.

Peak Daily Values

Peak daily values are reported for the variables listed in Table 16 to provide information for sizing collection and treatment facilities for runoff and drainage, and for evaluating the landfill design.

TABLE 13. OUTPUT OF MONTHLY TOTALS

Variable	Function
PREM(J)	The total precipitation, in inches, during month J where J is the number of the month (between 1 and 240).
RUNM(J)	The total runoff, in inches, during month J.
ETM(J)	The total evapotranspiration, in inches, during month J.
PRC3M(J)	The total percolation, in inches, through the base of the top subprofile during month J.
DRN3M(J)	The total lateral drainage, in inches, from the top subprofile during month J.
PRC2M(J)	The total percolation, in inches, through the base of the second subprofile from the top during month J.
DRN2M(J)	The total lateral drainage, in inches, from the second subprofile from the top during month J.
PRC1M(J)	The total percolation, in inches, through the base of the third subprofile from the top during month J.
DRN1M(J)	The lateral drainage, in inches, from the third subprofile from the top during month J.

TABLE 14. OUTPUT OF ANNUAL TOTALS

Variable	Function
PREA(IYR)	The total precipitation, in inches, during year IYR where IYR is the number of the year (between 1 and 20).
TPREA	The total precipitation, in cu. ft., during year IYR.
FPREA	The total precipitation, in percent of the total precipitation.
RUNA(IYR)	The total runoff, in inches, during year IYR.
TRUNA	The total runoff, in cu. ft., during year IYR.
FRUNA	The total runoff during year IYR, in percent of the total precipitation during year IYR.
ETA(IYR)	The total evapotranspiration, in inches, during year IYR.
TETA	The total evapotranspiration, in cu. ft., during year IYR.
FETA	The total evapotranspiration during year IYR, in percent of the total precipitation during year IYR.
PRC3A(IYR)	The total percolation, in inches, through the base of the top subprofile during year IYR.
TPRC3A	The total percolation, in cu. ft., through the base of the top subprofile during year IYR.
FPRC3A	The total percolation through the base of the top subprofile during year IYR, in percent of the total precipitation during year IYR.
DRN3A(IYR)	The total lateral drainage from the top subprofile, in inches, during year IYR.
TDRN3A	The total lateral drainage from the top subprofile, in cu. ft., during year IYR.
FDRN3A	The total lateral drainage from the top subprofile during year IYR, in percent of the total precipitation during year IYR.
PRC2A(IYR)	The total percolation, in inches, through the base of the second subprofile from the top during year IYR.

(Continued)

TABLE 14. (Continued)

Variable	Function
TPRC2A	The total percolation, in cu. ft., through the base of the second subprofile from the top during year IYR.
FPRC2A	The total percolation through the base of the second subprofile from the top during year IYR, in percent of the total precipitation during year IYR.
DRN2A(IYR)	The total lateral drainage from the second subprofile from the top, in inches, during year IYR.
TDRN2A	The total lateral drainage from the second subprofile from the top, in cu. ft., during year IYR.
FDRN2A	The total lateral drainage from the second subprofile from the top during year IYR, in percent of the total precipitation during year IYR.
PRC1A(IYR)	The total percolation, in inches, through the base of the third subprofile from the top during year IYR.
TPRC1A	The total percolation, in cu. ft., through the base of the third subprofile from the top during year IYR.
FPRC1A	The total percolation through the base of the third subprofile from the top during year IYR, in percent of the total precipitation during year IYR.
DRN1A(IYR)	The total lateral drainage from the third subprofile from the top, in inches, during year IYR.
TDRN1A	The total lateral drainage from the third subprofile from the top, in cu. ft., during year IYR.
FDRN1A	The total lateral drainage from the third subprofile from the top during year IYR, in percent of the total precipitation during year IYR.
OSWULE	The total soil water storage in the landfill at the beginning of year IYR, in inches.
TOSW	The total soil water storage in the landfill at the beginning of year IYR, in cu. ft.
PSWULE	The total soil water storage in the landfill at the end of year IYR, in inches.

(Continued)

TABLE 14. (Concluded)

Variable	Function
TPSW	The total soil water storage in the landfill at the end of year IYR, in cu. ft.
OLDSNO	The total snow water present at the beginning of year IYR, in inches.
TOSNO	The total snow water present at the beginning of year IYR, in cu. ft.
SNO	The total snow water present at the end of year IYR, in inches.
TSNO	The total snow water present at the end of year IYR, in cu. ft.
BAL(IYR)	The water budget balance for year IYR, in inches.
TBAL	The water budget balance for year IYR, in cu. ft.
FBAL	The water budget balance for year IYR, in percent of the total precipitation during year IYR.

TABLE 15. OUTPUT OF AVERAGE VALUES

Variable	Function
APREM(J)	The average monthly precipitation, in inches, for month J of the simulation period where J is one of the twelve months of a year.
ARUNM(J)	The average monthly runoff, in inches, for month J of the simulation period.
AETM(J)	The average monthly evapotranspiration, in inches, for month J of the simulation period.
APRC3M(J)	The average monthly percolation, in inches, through the base of the top subprofile during month J of the simulation period.
ADRN3M(J)	The average monthly lateral drainage, in inches, from the top subprofile for month J of the simulation period.
APRC2M(J)	The average monthly percolation, in inches, through the base of the second subprofile from the top during month J of the simulation period.
ADRN2M(J)	The average monthly lateral drainage, in inches, from the second subprofile from the top during month J of the simulation period.
APRC1M(J)	The average monthly percolation, in inches, through the base of the third subprofile from the top during month J of the simulation period.
ADRN1M(J)	The average monthly lateral drainage, in inches, from the third subprofile from the top during month J of the simulation period.
APREA	The average annual precipitation, in inches, for the simulation period.
TAPREA	The average annual precipitation, in cu. ft., for the simulation period.
FAPREA	The average annual precipitation for the simulation period, in percent of the average annual precipitation for the simulation period.
ARUNA	The average annual runoff, in inches, for the simulation period.

(Continued)

TABLE 15. Continued

Variable	Function
TARUNA	The average annual runoff, in cu. ft., for the simulation period.
FARUNA	The average annual runoff for the simulation period, in percent of the average annual precipitation.
AETA	The average annual evapotranspiration, in inches, for the simulation period.
TAETA	The average annual evapotranspiration, in cu. ft., for the simulation period.
FAETA	The average annual evapotranspiration for the simulation period, in percent of the average annual precipitation.
APRC3A	The average annual percolation, in inches, through the base of the top subprofile for the simulation period.
TAPC3A	The average annual percolation, in cu. ft., through the base of the top subprofile for the simulation period.
FAPC3A	The average annual percolation through the base of the top subprofile for the simulation period, in percent of the average annual precipitation.
ADRN3A	The average annual lateral drainage, in inches, from the top subprofile for the simulation period.
TADN3A	The average annual lateral drainage, in cu. ft., from the top subprofile for the simulation period.
FADN3A	The average annual lateral drainage from the top subprofile for the simulation period, in percent of the average annual precipitation.
APRC2A	The average annual percolation, in inches, through the base of the second subprofile from the top for the simulation period.
TAPC2A	The average annual percolation, in cu. ft., through the base of the second subprofile from the top for the simulation period.
FAPC2A	The average annual percolation through the base of the second subprofile from the top for the simulation period, in percent of the average annual precipitation.

(Continued)

TABLE 15. Concluded

Variable	Function
ADRN2A	The average annual lateral drainage, in inches, from the second subprofile from the top for the simulation period.
TADN2A	The average annual lateral drainage, in cu. ft., from the second subprofile from the top for the simulation period.
FADN2A	The average annual lateral drainage from the second subprofile from the top for the simulation period, in percent of the average annual precipitation.
APRC1A	The average annual percolation, in inches, through the base of the third subprofile from the top for the simulation period.
TAPC1A	The average annual percolation, in cu. ft., through the base of the third subprofile from the top for the simulation period.
FAPC1A	The average annual percolation through the base of the third subprofile from the top for the simulation period, in percent of the average annual precipitation.
ADRN1A	The average annual lateral drainage, in inches, from the third subprofile from the top for the simulation period.
TADN1A	The average annual lateral drainage, in cu. ft., from the third subprofile from the top for the simulation period.
FADN1A	The average annual lateral drainage from the third subprofile from the top for the simulation period, in percent of the average annual precipitation.

TABLE 16. OUTPUT OF PEAK DAILY VALUES

Variable	Function
PPRE	The peak daily precipitation value, in inches, for the simulation period.
TPPRE	The peak daily precipitation value, in cu. ft., for the simulation period.
PRUN	The peak daily runoff value, in inches, for the simulation period.
TPRUN	The peak daily runoff value, in cu. ft., for the simulation period.
PPRC3	The peak daily percolation, in inches, through the base of the top subprofile for the simulation period.
TPPRC3	The peak daily percolation, in cu. ft., through the base of the top subprofile for the simulation period.
PPRC2	The peak daily percolation, in inches, through the base of the second subprofile from the top for the simulation period.
TPPRC2	The peak daily percolation, in cu. ft., through the base of the second subprofile from the top for the simulation period.
PPRC1	The peak daily percolation, in inches, through the base of the third subprofile from the top for the simulation period.
TPPRC1	The peak daily percolation, in cu. ft., through the base of the third subprofile from the top for the simulation period.
PSNO	The peak daily snow water, in inches, present during the simulation period.
TPSNO	The peak daily snow water, in cu. ft., present during the simulation period.
PSW	The peak soil water content in the evaporative zone, in vol/vol, during the simulation period.
DSW	The minimum soil water content in the evaporative zone, in vol/vol, during the simulation period.

SECTION 4

SYSTEM DOCUMENTATION

COMPUTER EQUIPMENT

The HELP model consists of approximately 5,000 cards with 80-column card length. The model is equipped to run on IBM (International Business Machines) 360/370 Extended FORTRAN IV computer systems.

The default climatologic data file is approximately 24,000 cards with 80 column card length. The model is designed to run with or without the default climatologic data attached.

PERIPHERAL EQUIPMENT

The following equipment is necessary to run the model in the time-sharing mode:

telephone
120 voltage electrical outlet
portable computer terminal

The following equipment is necessary to run the model in the batch mode:

keypunch machine 029
card reader/puncher
line printer

SOURCE PROGRAM

The source program listings of the main program and each subroutine are given in Appendix A.

VARIABLES AND SUBROUTINES

The variables used in the program, the subroutines in which the variables are used, and the definitions of the variables are presented in Appendix B.

DATA STRUCTURES

The data files used by the program and the device numbers, which are used to read or write information, are listed in Table 17.

(1) The default data file called PRE3 stores five years of daily precipitation values, 12 monthly mean temperature values, 12 monthly mean solar radiation values, 13 leaf area index values for excellent grass, and 13 leaf area index values for good row crops for 102 cities across the United States. The format for the precipitation data is 10 values per record with 37 records per year. The formats for temperature and solar radiation are 12 values per record. The formats for the LAI values are two date values and two leaf area values per record for 13 records.

(2) The data file called TAPE4 stores the daily precipitation data to be used in simulation. The maximum storage for the default option is five years, and the maximum storage for the manual option is 20 years.

(3) The data file called TAPE5 stores the soil characteristics and design data input from the user.

(4) The data file called TAPE7 stores monthly mean temperatures to be used in the simulation.

(5) The data file called TAPE8 stores the name of the cities and states available for the default climatologic input option.

(6) The data file called TAPE11 stores the name of the selected city and state when using the default climatologic input option.

(7) The default data file called TAPE12 stores the soil characteristics given in Table 10, seven sets of three coefficients to compute the SCS runoff curve number for the seven vegetation types, and seven coefficients to adjust the hydraulic conductivity for the presence of roots in the top layer for the default soil characteristics input option.

(8) The data file called TAPE13 stores monthly mean solar radiation values to be used in the simulation.

(9) The data file called TAPE14 stores the leaf area indices to be used in the simulation.

(10) The data file called TAPE15 stores the winter cover factors to be used in the simulation.

(11) The data file called TAPE16 stores the evaporative zone depth to be used in the simulation.

TABLE 17. DATA FILES AND DEVICE NUMBERS

Data Files		Device No.
(1)	PRE3	9
(2)	TAPE4	4
(3)	TAPE5	5
(4)	TAPE7	7
(5)	TAPE8	8
(6)	TAPE11	11
(7)	TAPE12	12
(8)	TAPE13	13
(9)	TAPE14	14
(10)	TAPE15	15
(11)	TAPE16	16
	Input	10*
	Output	6**

* Device number 10 reads data input from the terminal when the interactive method is used and it reads data input from cards when the batch method is used.

** Device number 6 prints output to the terminal when the interactive method is used and it prints output to the highspeed printer when the batch method is used.

STORAGE REQUIREMENTS

The entire program requires 240K characters or bytes of storage and the default climatologic data file (PRE3) requires 1520K bytes of storage on the 360/370 configuration of IBM MVS/OS system.

MAINTENANCE AND UPDATE

Maintenance and updates will be provided by authors as needed. There have not been any updates to date.

SECTION 5

OPERATING DOCUMENTATION

OPERATOR INSTRUCTIONS

The program is stored on the 3350/350 disk drive and is operated under the 360/370 configuration of IBM MVS/OS system of the National Computer Center.

OPERATING MESSAGES

There are two forms of messages: system and program. The system messages are produced by the IBM 360/370 Computer System. No special programming messages are produced. If any messages occur while operating the system, contact the authors.

ERROR RECOVERY

The user must rerun the program when a malfunction occurs. If difficulty is encountered, contact the authors for additional help.

RUN TIME

For the interactive method, execution should occur within seconds of issuing a command. However, the run time for the batch method depends on the number of years of daily precipitation entered. A run time of four minutes should be provided for 20 years of manual climatologic input. To run five years of simulation with default climatologic input, the run time should not exceed 30 seconds.

JOB CONTROL CARDS

The HELP model can be run in the batch and remote batch modes to reduce computer costs. To run the HELP model in the batch mode on the NCC IBM 360/370 computer system, the user must prepare a punched card deck of control cards and sequential input cards. The control cards are separated into two steps. An example card deck for running the HELP model with default data is given in Table 18. In the remote batch mode, a punched card deck is not required but the user must produce a file or on-line data set of the control cards and input data in sequential order.

TABLE 18. JOB CONTROL CARDS

Control Cards Step 1

```
(1)  //userid JOB (accuidM,Muserid),lastname,PRTY=1,TIME=4,PASSWORD=password
(2)  /*ROUTE PRINT RMTxxx
(3)  //STEP1 EXEC PGM=IEBGENER
(4)  //SYSIN DD DUMMY
(5)  //SYSPRINT DD SYSOUT=A
(6)  //SYSUT2 DD DSN=useridacc.AFILE,
     // DISP=(NEW,PASS,DELETE),SPACE=(TRK,(1Ø,5)),
     // DCB=(LRECL=8Ø,RECFM=FB,BLKSIZE=312Ø),
     // UNIT=DISK
(7)  //SYSUT1 DD *
```

Sequential Input Cards

```
(1)  1
(2)  YES
(3)  NO
(4)  CALIFORNIA
(5)  LOS ANGELES
(6)  4
(7)  10
(8)  2
(9)  YES
(10) BATCH SAMPLE
(11) DEFAULT CASE DATA
(12) 20 OCTOBER 1982
(13) 1
(14) NO
(15) 24
(16) 1
(17) 7
(18) NO
(19) NO
(20) 10000
(21) 3
(22) 5
(23) NO
(24) YES
(25) 4
```

Control Cards Step 2

```
(1)  /*
(2)  //STEP2 EXEC PGM=LEM3
(3)  //STEPLIB DD DSN=mastidmastacc.HYDRO.LOAD,DISP=SHR
```

(Continued)

TABLE 18. (Concluded)

Control Cards Step 2 (Continued)

```
(4)  //FT1ØFØØ1 DD DSN=useridacc.AFILE,UNIT=DISK,
     // DISP=(OLD,DELETE,DELETE),
     // SPACE=(CYL,(1Ø,2)),DCB=(RECFM=FB,LRECL=8Ø,BLKSIZE=312Ø)
(5)  //FTØ6FØØ1 DD SYSOUT=A
(6)  //FTØ4FØØ1 DD DSN=useridacc.TAPE4,DISP=SHR
(7)  //FTØ5FØØ1 DD DSN=useridacc.TAPE5,DISP=SHR
(8)  //FTØ7FØØ1 DD DSN=useridacc.TAPE7,DISP=SHR
(9)  //FTØ8FØØ1 DD DSN=mastidmastacc.TAPE8,DISP=SHR
(10) //FTØ9FØØ1 DD DSN=mastidmastacc.PRE3,DISP=SHR
(11) //FT11FØØ1 DD DSN=useridacc.TAPE11,DISP=SHR
(12) //FT12FØØ1 DD DSN=mastidmastacc.TAPE12,DISP=SHR
(13) //FT13FØØ1 DD DSN=useridacc.TAPE13,DISP=SHR
(14) //FT14FØØ1 DD DSN=useridacc.TAPE14,DISP=SHR
(15) //FT15FØØ1 DD DSN=useridacc.TAPE15,DISP=SHR
(16) //FT16FØØ1 DD DSN=useridacc.TAPE16,DISP=SHR
```

The example batch card deck for running the HELP model is for a very simple case using default climatologic and soil characteristics input options. Climatologic data from Los Angeles, California, using default vegetation type 4 (fair grass) with a root zone depth of 10 inches were used. Lines 10, 11, and 12 are the title of the simulation run. The design has one layer; 24 inches thick, layer type 1 (vertical percolation layer) and composed of soil texture 7 characteristics (loam and very fine sand, LVFS). The layer is not compacted and the default runoff curve number is not overridden. The surface area is 10,000 sq ft. Output of monthly totals and a summary are requested for 5 years of simulation. Information on user input is provided in the User's Guide for the HELP Model (19).

The instructions for preparing the card deck are as follows (20):

Control Cards Step 1

Card (1)

a. //userid--The user's identification name.

b. JOB--The word JOB indicates that it is the job card.

c. (accuidM, Muserid)--The account name plus the utilization identifier plus the letter M and the letter M followed by the user's identification.

d. lastname--The user's last name.

e. PRTY--The priority of the job where

1 = overnight processing time

2 = 4 hours processing time

3 = 2 hours processing time

4 = 1/2 hour processing time

5 = 1/4 hour processing time

f. TIME--The maximum core time to be used in minutes.

g. PASSWORD--The user's password.

Card (2)

/*ROUTE PRINT RMTxxx--Prints the output to the high speed printer number xxx. This card is omitted if the user wishes the output to be mailed to him.

Card (3)

a. STEP1--Processes the step 1 cards first.

b. EXEC PGM=IEBGENER--Specifies that the system program named IEBGENER enters the data found in the file called AFILE.

Card (4)

//SYSIN DD DUMMY--A dummy data definition statement is used to specify the input facilities.

Card (5)

//SYSPRINT DD SYSOUT=A--The specific output from the program is to be on device 6.

Card (6) (shown as 4 lines in Table 18)

a. //SYSUT2 DD DSN=useridacc.AFILE,--AFILE is the name of the data set or file containing the sequential input cards and useridacc is the user identification followed by the account name.

b. // DISP=(NEW,PASS,DELETE),--The disposition of the AFILE is a new data set to be passed to STEP2 for more processing and to be deleted when the program is finished.

c. SPACE=(TRK,(1Ø,5)),--Requests space for the data set (AFILE). The type and size of this space are 10 primary and 5 secondary tracks.

d. // DCB=(LRECL=8Ø,RECFM=FB,BLKSIZE=312Ø),--The data card block has 80 column records, the records have fixed blocks, and the block size is 3120.

e. // UNIT=DISK--AFILE is to be stored on a DISK device.

Card (7)

//SYSUT1 DD *--This indicates to the system that data are on the next card.

Control Cards Step 2

Card (1)

/*--This indicates a comment card.

Card (2)

a. //STEP2--Processes the Step 2 card second.

b. EXEC PGM=LEM3--Specifies that the executable module of the HELP model (LEM3) be run.

Card (3)

a. //STEPLIB DD--The program exists in a private library.

b. DSN=mastidmastacc.HYDRO.LOAD,DISP=SHR--The data set name is HYDRO and loads it in a shared private library. The author's identification name and account are mastid and mastacc, respectively.

Card (4) (shown as 3 lines in Table 18)

a. //FT1ØFØØ1 DD DSN=useridacc.AFILE,UNIT=DISK,--The system reads data from a data set called AFILE with device 10 from the user's account and stores data on a disk device.

b. // DISP=(OLD, DELETE, DELETE),--The disposition of AFILE is old, and is to be deleted from processing and to be deleted when the program is finished executing.

c. // SPACE=(CYL,(1Ø,2),DCB=(RECFM=FB,LRECL=8Ø,BLKSIZE=312Ø)--Requests space for data set AFILE. The type and size of this space are 10 primary cylinders and 2 secondary cylinders. The data card block has 80 column records, the records have fixed blocks, and the block size is 3120.

Card (5)

//FTØ6FØØ1 DD SYSOUT=A--The output is printed on device 6.

Card (6)

//FTØ4FØØ1 DD DSN=useridacc.TAPE4,DISP=SHR--Reads or writes to the data set TAPE4 on the given account in a shared private library.

Card (7)

//FTØ5FØØ1 DD DSN=useridacc.TAPE5,DISP=SHR--Reads or writes to the data set TAPE5 on the given account in a shared private library.

Card (8)

//FTØ7FØØ1 DD DSN=useridacc.TAPE7,DISP=SHR--Reads or writes to the data set TAPE7 on the given account in a shared private library.

Card (9)

//FTØ8ØØ1 DD DSN=mastidmastacc.TAPE8,DISP=SHR--Reads or writes to the data set TAPE8 on the given account in a shared private library.

Card (10)

//FTØ9FØØ1 DD DSN=mastidmastacc.PRE3,DISP=SHR--Reads or writes to the data set PRE3 on the given account in a shared private library.

Card (11)

//FT11FØØ1 DD DSN=useridacc.TAPE11,DISP=SHR--Reads or writes to the data set TAPE11 on the given account in a shared private library.

Card (12)

//FT12FØØ1 DD DSN=mastidmastacc.TAPE12,DISP=SHR--Reads or writes to the data set TAPE12 on the given account in a shared private library.

Card (13)

//FT13FØØ1 DD DSN=useridacc.TAPE13,DISP=SHR--Reads or writes to the data set TAPE14 on the given account in a shared private library.

Card (14)

//FT14FØØ1 DD DSN=useridacc.TAPE14,DISP=SHR--Reads or writes to the data set TAPE13 on the given account in a shared private library.

Card (15)

//FT15FØØ1 DD DSN=useridacc.TAPE15,DISP=SHR--Reads or writes to the data set TAPE15 on the given account in a shared private library.

Card (16)

//FT16FØØ1 DD DSN=useridacc.TAPE16,DISP=SHR--Reads or writes to the data set TAPE16 on the given account in a shared private library.

REFERENCES

1. Perrier, E. R., and A. C. Gibson. Hydrologic Simulation on Solid Waste Disposal Sites. EPA-SW-868, U.S. Environmental Protection Agency, Cincinnati, OH, 1980. 111 pp.

2. Schroeder, P. R., and A. C. Gibson. Supporting Documentation for the Hydrologic Simulation Model for Estimating Percolation at Solid Waste Disposal Sites (HSSWDS). Draft Report, U.S. Environmental Protection Agency, Cincinnati, OH, 1982. 153 pp.

3. Knisel, W. J., Jr., Editor. CREAMS, A Field Scale Model for Chemical Runoff and Erosion from Agricultural Management Systems. Vols. I, II, and III, Draft Copy, USDA-SEA, AR, Cons. Res. Report 24, 1980. 643 pp.

4. USDA, Soil Conservation Service. National Engineering Handbook, Section 4, Hydrology. U.S. Government Printing Office, Washington, D.C., 1972.

5. Freeze, R. A., and J. A. Cherry. Groundwater. Prentis-Hall, Englewood Cliffs, N.J., 1979. 604 pp.

6. Skaggs, R. W. Modification to DRAINMOD to Consider Drainage from and Seepage through a Landfill. Draft Report, U.S. Environmental Protection Agency, Cincinnati, OH, 1982. 21 pp.

7. Ritchie, J. T. A Model for Predicting Evaporation from a Row Crop with Incomplete Cover. Water Resources Research, Vol. 8, No. 5, 1972. pp. 1204-1213.

8. Shanholtz, V. O., and J. B. Lillard. A Soil Water Model for Two Contrasting Tillage Practices. Bulletin 38, Virginia Water Resources Research Center, VPISU, Blacksburg, VA, 1970. 217 pp.

9. Saxton, K. E., H. P. Johnson, and R. H. Shaw. Modeling Evapotranspiration and Soil Moisture. In: Proceedings of American Society of Agricultural Engineers 1971 Winter Meeting, St. Joseph, MI, 1971. No. 71-7636.

10. Williams, J. R., and W. J. LaSeur. Water Yield Model Using SCS Curve Numbers. Jour. of the Hydraulics Div., ASCE, Vol. 102, No. HY9, pp. 1241-1253, 1976.

11. Li, E. A. A Model to Define Hydrologic Response Units Based on Characteristics of the Soil-Vegetative Complex Within a Drainage Basin. M.S. Thesis, Virginia Polytechnic Institute and State University, Blacksburg, VA, 1975. 124 pp.

12. Kothandaraman, V., and R. L. Evans. Use of Air-Water Relationships for Predicting Water Temperature. Illinois State Water Survey, Urbana, Report of Investigation 69, 1972. 14 pp.

13. Sudar, R. A., K. E. Saxton, and R. G. Spomer. A Predictive Model of Water Stress in Corn and Soybeans. Transaction of American Society of Agricultural Engineers, p. 97-102, 1981.

14. Lutton, R. J., G. L. Regan, and L. W. Jones. Design and Construction of Covers for Solid Waste Landfills. PB 80-100381, EPA-600/2-79-165, U.S. Environmental Protection Agency, Cincinnati, Ohio, 1979.

15. England, C. B. Land Capability: A Hydrologic Response Unit in Agricultural Watersheds. ARS 41-172, Agricultural Research Service, USDA, 1970.

16. Breazeale, E., and W. T. McGeorge. A New Technic for Determining Wilting Percentage of Soil. Soil Science, Vol. 68, pp. 371-374, 1949.

17. USDA. Climate and Man Yearbook of Agriculture. United States Department of Agriculture, U.S. Government Printing Office, 1941. 1248 pp.

18. Environmental Science Services Administration. Climatic Atlas of the United States. U.S. Dept. of Commerce, NOAA, National Climatic Center, Asheville, NC, 1974. 80 pp.

19. Schroeder, P. R., J. M. Morgan, T. M. Walski, and A. C. Gibson. Hydrologic Evaluation of Landfill Performance (HELP) Model: Volume I. User's Guide for Version 1. Draft Report, Municipal Environmental Research Laboratory, U.S. Environmental Protection Agency, Cincinnati, OH, 1983.

20. IBM. IBM OS FORTRAN IV (H extended). Compiler Programmer's Guide. International Business Machines Corporation, New York, New York, 1974.

APPENDIX A

HELP SOURCE PROGRAM LISTING

```
C
C ************************MAIN************************
C
C
C     THE MAIN PROGRAM DIRECTS THE PROGRAM TO ACCEPT INPUT OF
C     CLIMATOLOGIC DATA, OR SOIL CHARACTERISTICS AND DESIGN
C     INFORMATION, TO RUN THE SIMULATION AND PRODUCE OUTPUT,
C     AND TO STOP THE RUN.
C
      COMMON/BLK1/KCDATA,KSDATA,KFLAG,IFLAG,KVEG,
     1 IO1,IO2,IO3,IO4,IO5
      DIMENSION VALUE(10),KLM(74)
C
C      PRINTING OF HEADING
C
      WRITE(6,11)
   11 FORMAT(1H //1X,66(1H*)/1X,66(1H*)/1X,1H*,64X,1H*
     1/1X,1H*,8X,47H HYDROLOGIC EVALUATION OF LANDFILL PERFORMANCE ,
     29X,1H*/1X,1H*,25X,14HHELP VERSION 1,25X,1H*/1X,1H*,
     364X,1H*/1X,1H*,26X,11H WRITTEN BY,27X,1H*/1X,
     21H*,27X,10H          ,27X,1H*/1X,
     31H*,24X,17HPAUL R. SCHROEDER,23X,1H*/1X,
     41H*,25X,14H AUGUST, 1983 ,25X,1H*/1X,
     41H*,64X,1H*/1X,1H*,28X,7H OF THE,29X,1H*/1X,1H*,15X,
     512H WATER RESOU,22HRCES ENGINEERING GROUP,15X,1H*/1X,1H*,
     120X,24HENVIRONMENTAL LABORATORY,20X,1H*/1X,
     61H*,15X,34H USAE WATERWAYS EXPERIMENT STATION,15X,1H*/1X,
     71H*,26X,12HP.O. BOX 631,26X,1H*/1X,1H*,23X,13HVICKSBURG, MS,
     86H 39180,22X,1H*/1X,1H*,64X,1H*/1X,66(1H*)/1X,1H*,64X,1H*/1X,
     11H*,14X,36H USER'S GUIDE AVAILABLE UPON REQUEST,14X,1H*/1X,
     21H*,15X,35HFOR CONSULTATION CONTACT AUTHORS AT,14X,1H*/1X,
     31H*,15X,34H (601) 634-3709 OR (601) 634-3710 ,15X,1H*/1X,
     41H*,64X,1H*/1X,66(1H*)/1X,66(1H*)//)
      KCDATA=0
      KSDATA=0
      KFLAG=0
      IFLAG=0
      IO1=0
      IO2=0
      IO3=0
      IO4=0
      IO5=0
      KVEG=8

   60 REWIND 4
      REWIND 5
      REWIND 7
      REWIND 11
      REWIND 14
```

```
      REWIND 15
      REWIND 13
      REWIND 16
      REWIND 16
      WRITE(6,70)
   70 FORMAT(1H //1H ,4H1.1 ,29HDO YOU WANT TO ENTER OR CHECK,
     5 26H DATA OR TO OBTAIN OUTPUT //
     1 32H ENTER 1 FOR CLIMATOLOGIC INPUT,/
     2 7X,    32H2 FOR SOIL OR DESIGN DATA INPUT,/
     3 7X,51H3 TO RUN THE SIMULATION AND OBTAIN DETAILED OUTPUT,/
     4 7X,    22H4 TO STOP THE PROGRAM,4h AND,/
     5 7X,48H5 TO RUN THE SIMULATION AND OBTAIN ONLY SUMMARY ,
     6 7HOUTPUT.///)

      READ(10,80)(KLM(J),J=1,74)
      CALL SCAN(NO,VALUE,74,KLM)
   80 FORMAT(74A1)
      KANS=VALUE(1)
      IF(KANS.GT.1) GO TO 82
      WRITE(6,40)
   40 FORMAT(1H //44H 1.2 DO YOU WANT TO USE DEFAULT CLIMATOLOGIC,
     1 6H DATA /1X,16HENTER YES OR NO.//)
      CALL ANSWER(IANS)
      KCDATA=0
C
C     KCDATA=1 IF DEFAULT CLIMATOLOGIC DATA IS USED.
C
      IF(IANS.EQ.0)KCDATA=1
      IF(KCDATA.EQ.0) CALL MCDATA
      IF(KCDATA.EQ.1) CALL DCDATA
      GO TO 60
   82 IF(KANS.GT.2) GO TO 84
      WRITE(6,50)
   50 FORMAT(1H //4H 1.3,38H DO YOU WANT TO USE DEFAULT SOIL DATA/
     1  1X,16HENTER YES OR NO.//)
      CALL ANSWER(IANS)
      KSDATA=0
C
C     KSDATA=1 IF DEFAULT SOIL CHARACTERISTICS ARE USED.
C
      IF(IANS.EQ.0)KSDATA=1
      IF(KSDATA.EQ.0) CALL MSDATA
      IF(KSDATA.EQ.1) CALL DSDATA
      GO TO 60
   84  IF(KANS.EQ.5)IO2=1
      IF(KANS.EQ.6)IO1=1
      IF(KANS.EQ.7)IO3=1
      IF(KANS.EQ.8)IO4=1
      IF(KANS.EQ.9)IO5=1
      IF(KANS.GE.5.AND.KANS.LE.9)CALL SIMULA
```

```
      IF(KANS.EQ.3) CALL SIMULA
      IF(KANS.EQ.4) GO TO 90
      GO TO 60


   90 WRITE(6,100)
  100 FORMAT(1H //38H 1.4 ENTER RUNHELP TO RERUN PROGRAM OR/1X,
     1  39HENTER LOGOFF TO LOGOFF COMPUTER SYSTEM.///)
      STOP
      END
```

```
      SUBROUTINE ANSWER(IANS)
C
C     THIS ROUTINE ASSIGNS YES OR NO ANSWER TO QUESTION
C
       DIMENSION LISTA(2)
      DATA LISTA/3HYES,2HNO/
    5 READ(10,21)KANS
   21 FORMAT(A4)
      DO 1 I=1,2
      IF(KANS.EQ.LISTA(I))GO TO 2
    1 CONTINUE
      WRITE(6,4)KANS
    4 FORMAT(1H /1H ,A4,32H INAPPROPRIATE COMMAND-TRY AGAIN//)
      WRITE(6,3)
    3 FORMAT(1H ,15HENTER YES OR NO//)
      GO TO 5
    2 IF(KANS.EQ.LISTA(2))GO TO 6
      IANS=0
      RETURN
    6 IANS=1
      RETURN
      END
```

```
C
C       ************************ AVROUT ************************
C
C
C     SUBROUTINE AVROUT COMPUTES VERTICAL WATER ROUTING OR
C     DRAINAGE THROUGH THE SEGMENTS ABOVE THE BARRIER
C     LAYER OF A SUBPROFILE.
C
      SUBROUTINE AVROUT(DRIN,NSEGB,NSEGL,E,DT,BALY,BALT,
     1   SWULY,QDRN,IBAR,QPERCY,QLATY,DRNMAX,ISAND)


      COMMON/BLK7/STHICK(16),UL(16),FCUL(16),WPUL(16),
     1   SWUL(16),RCUL(16)


      DIMENSION DRIN(17),E(16),BALY(16),BALT(16),SWULY(16)
       DIMENSION SWULYE(16)

C
C     SWLIM IS THE LOWEST SOIL WATER CONTENT AFTER DRAINAGE
C     AND IS EQUAL TO THE FIELD CAPACITY OR
C     YESTERDAY'S SOIL WATER CONTENT WHICHEVER IS SMALLER.
C
      DO 10   J=NSEGB,NSEGL
      SWLIM=FCUL(J)
      SWULYE(J)=SWULY(J)+(BALY(J)/2.0)
      IF(SWULYE(J).LT.FCUL(J))SWLIM=SWULYE(J)
      IF(J.GE.8)SWLIM=FCUL(J)
       IF(ISAND.EQ.1)SWLIM=FCUL(J)
C
C     DRNMAX IS THE TOTAL DRAINABLE WATER IN A SEGMENT
C     TODAY AND IS EQUAL TO THE SOIL WATER CONTENT AT THE
C     BEGINNING OF THE DAY(SWULY+BALY/2) PLUS DRAINAGE INTO
C     THE SEGMENT(DRIN) MINUS EVAPOTRANSPIRATION(E) AND THE
C     LOWEST SOIL WATER CONTENT FOR DRAINAGE(SWLIM).
C
      DRNMAX=SWULY(J)-SWLIM+DRIN(J)-E(J)+(BALY(J)/2.0)
      IF(DRNMAX.LT.0.0)DRNMAX=0.0
      IF(DRIN(J).LE.0.0) GO TO 4
      V1= 1.0+((RCUL(J)*DT/2.0)/(UL(J)-SWLIM))
      V2= (RCUL(J)*DT)/(UL(J)-SWLIM)
      V3= ((BALY(J)+DRIN(J)-E(J))/2.0)+SWULY(J)-SWLIM
C
C     DRIN(J+1) IS THE DRAINAGE OUT OF SEGMENT J.
C
      DRIN(J+1)= V2*V3/V1
      GO TO 6
```

```
    4       DRIN(J+1)=((2.0*(SWULY(J)-FCUL(J)))+BALY(J)+
     1          DRIN(J)-E(J))*RCUL(J)*DT/(2.*(UL(J)-FCUL(J))+
     2          RCUL(J)*DT)

    6    IF(DRIN(J+1).GT.(RCUL(J)*DT))DRIN(J+1)=RCUL(J)*DT
         IF(DRIN(J+1).GT.DRNMAX)DRIN(J+1)=DRNMAX
          IF(DRIN(J+1).LT.0.0)DRIN(J+1)=0.0
   10 CONTINUE

C
C     IBAR=0 WHEN THERE IS A BARRIER LAYER.
C
      IF(IBAR.EQ.0)GO TO 15
C
C     QDRN IS THE COMBINED ESTIMATE OF LATERAL DRAINAGE
C     AND PERCOLATION WATERS FROM BASE OF DRAIN LAYER.
C
      IF(QDRN.LE.0.0)GO TO 12
      DRIN(NSEGL+1)=QDRN*DT
       IF(DRIN(NSEGL+1).LE.DRNMAX)GO TO 15
      IF(DRIN(NSEGL+1).GT.DRNMAX)DRIN(NSEGL+1)=DRNMAX
C
C     CORRECTS COMPONENTS OF QDRN WHEN DRAINAGE IS
C     LIMITED BY DRNMAX.
C
       QLATY=QLATY*DRNMAX/DT/QDRN
       QPERCY=QPERCY*DRNMAX/DT/QDRN
      QDRN=DRNMAX/DT
      GO TO 15

   12   QDRN=0.0
       QLATY=0.0
       QPERCY=0.0
      DRIN(NSEGL+1)=0.0
   15  CONTINUE


C
C     COMPUTES THE CHANGE IN STORAGE(BALT) AND THE
C     MIDDAY SOIL WATER CONTENT.
C
      DO 20   J=NSEGB,NSEGL
         BALT(J)=DRIN(J)-DRIN(J+1)-E(J)
         SWUL(J)=SWULY(J)+(BALY(J)+BALT(J))/2.0

   20 CONTINUE


      RETURN
      END
```

```
C
C      ************************ CNTRLD ************************
C
      SUBROUTINE CNTRLD(IUNIT,IUNITT,IUNITB)
C
C     SUBROUTINE CNTRLD SETS CONTROL VARIABLES FOR OUTPUT.
C
      COMMON/BLK4/LAYER(10),THICK(9),LAY
      COMMON/BLK6/NSEG1,NSEG2,NSEG3,VDEPTH,RDEPTH
C
C     IUNIT IS THE NUMBER OF SUBPROFILES.
C
      IUNIT=1
      IF(NSEG2.GT.0)IUNIT=2
      IF(NSEG3.GT.0)IUNIT=3
C
C     IUNITT IS THE NUMBER OF SUBPROFILES ABOVE THE
C     TOP WASTE LAYER.
C     IUNITB IS THE NUMBER OF SUBPROFILES BELOW THE
C     BOTTOM WASTE LAYER.
C
      IUNITT=2
      IUNITB=3
      IWT=0
      IWB=0
C
C     ESTABLISHES THE LOCATIONS OF THE TOP AND BOTTOM WASTE LAYERS.
C
      DO 10 I=1,LAY
      K=LAY+1-I
      IF(LAYER(K).EQ.4)IWT=K
      IF(LAYER(I).EQ.4)IWB=I
   10 CONTINUE
      IF(IWT.EQ.0) GO TO 20
      IF(IWT.LE.(LAY-NSEG3)) IUNITT=1
      IF(IWT.LE.(LAY-NSEG3-NSEG2))IUNITT=0
      IF(IWB.GT.(LAY-NSEG3-NSEG2)) IUNITB=2
```

```
      IF(IWB.GT.(LAY-NSEG3)) IUNITB=1

      RETURN

   20 IUNITT=IUNIT
      IUNITB=0

      RETURN
      END
```

```
C
C       ************************ CONVRG ************************
C
      SUBROUTINE CONVRG(KK,X1,X2,EST,EPS,MFLAG,TOP,BOT)

C
C     SUBROUTINE CONVRG IS USED TO TEST THE DRAINAGE
C     ESTIMATE AND GENERATE NEW ESTIMATES.
C

      MFLAG=1

C
C     TESTS CLOSENESS OF ESTIMATE.
C
      IF(X2.LT.0.00005)X2=0.00005
      IF(ABS(X1-X2).LT.(EPS*X2)) RETURN

      IF(ABS(X1-X2).LT.(EPS/10.))RETURN
      MFLAG=0

      IF(KK.GT.1) GO TO 20
C
C     SETS RANGE OF ESTIMATES.
C
         IF(X1.GT.X2) GO TO 10
            BOT=X1
            TOP=X2
         GO TO 30


10        TOP=X1
          BOT=X2
          GO TO 30

20    CONTINUE
C
C     SETS NEW RANGE OF ESTIMATES.
C
        IF(X1.GT.X2) BOT=X2
        IF(X1.LT.X2) TOP=X2

C
C     SETS NEW ESTIMATE AS MIDDLE OF RANGE.
C
30    EST=(BOT+TOP)/2.0

      RETURN
      END
```

```
C
C       ************************* DATFIT *************************
C
        SUBROUTINE DATFIT(M,D,AC,A,B)
        REAL D(12)
        PI        =3.14159
        SUMD      =0.0
        AM        =FLOAT(M)

        DO 10 I=1,M
        SUMD      =SUMD+D(I)
   10   CONTINUE

        AC        =SUMD/AM
        AN        =1.0
        SUMA      =0.0
        SUMB      =0.0

        DO 20 I=1,M
        TI        =FLOAT(I)-0.5
        TH        =2.0*PI*AN*TI
        FCOS      =COS(TH/AM)
        FSIN      =SIN(TH/AM)
        SUMA      =SUMA+D(I)*FCOS
        SUMB      =SUMB+D(I)*FSIN
   20   CONTINUE

        A         =2.0/AM*SUMA
        B         =2.0/AM*SUMB
        RETURN
        END
        FUNCTION COMPUT(AC,A,B,I,N)
        AI        =FLOAT(I)-0.5
        AN        =FLOAT(N)
        ANG       =6.283185*AI/AN
        COMPUT    =AC+A*COS(ANG)+B*SIN(ANG)
        RETURN
        END
C
C      FUNCTION SUBPROGRAM COMPUT COMPUTES THE DAILY TEMPERATURE
C      OR SOLAR RADIATION VALUE FROM THE FITTED CURVE.
C
```

```
C
C      ************************ DCDATA ************************
C
       SUBROUTINE DCDATA
C
C      THIS SUBROUTINE PREPARES CLIMATOLOGIC INPUT FILES FROM THE
C      DEFAULT CLIMATOLOGIC DATA TAPE.
C      TAPE9 CONTAINS DEFAULT RAINFALL,TEMPERATURES,SOLAR RADIATION
C      AND LAI FOR 102 CITIES.
C      TAPE 9 CONTAINS A LIST OF THE DEFAULT CITIES.
C      TAPE 11 CONTAINS THE NAME OF THE SELECTED CITY AND THE
C      NUMBER OF THE CITY ON TAPE 9.
C      TAPE 4 CONTAINS THE SELECTED PRECIPITATION VALUES.
C      TAPE 7 CONTAINS THE SELECTED TEMPERATURES,
C
C      TAPE 13 CONTAINS THE SELECTED SOLAR RADIATION VALUES.
C      TAPE 14 CONTAINS THE SELECTED LEAF AREA INDICES AND
C      VEGETATION TYPE.
C      TAPE 15 CONTAINS THE WINTER COVER FACTOR.
C      TAPE 16 CONTAINS THE EVAPORATIVE ZONE DEPTH.
C
C
       COMMON/BLK1/KCDATA,KSDATA,KFLAG,IFLAG,KVEG
       DIMENSION XGR(7), WCF(7), ICITY(18),LISTC(99),PREC(10),
      1TEMP(12),RADI(12),LDATEG(13),AREAG(13),AREAR(13),LDATER(13),
      1LDAY13(13),XLAI13(13),LISTS(41),VALUE(10),KLM(74)

       DATA LISTS/4HALAS,4HARIZ,4HARKA,4HCALI,4HCOLO,4HFLOR,4HGEOR,
      14HHAWA,4HIDAH,4HILLI,4HINDI,4HIOWA,4HKANS,4HKENT,4HLOUI,4HMAIN,
      14HMASS,4HMICH,4HMINN,4HMISS,4HMONT,4HNEBR,4HNEVA,3HNEW,4HNORT,
      14HOHIO,4HOKLA,4HOREG,4HPENN,4HRHOD,4HSOUT,4HTENN,4HTEXA,4HUTAH,
      14HVIRG,4HWASH,4HWISC,4HWYOM,4HPUER,
      14HCONN,4HVERM/
       DATA LISTC/4HINDI,4HTOPE,4HDODG,4HASTO,4HPORT,4HMEDF,
      14HPITT,4HPHIL,
      14HSEAB,4HCEDA,4HSALT,4HLAND,4HFLAG,4HSANT,3HLAS,3HELY,4HALBU,
      14HCHIC,4HLEXI,4HCLEV,4HCOLU,4HPUT-,4HTULS,4HPULL,4HE. L,4HSAUL,
      14HST. ,4HGLAS,4HGREA,4HITHA,4HCENT,4HSYRA,4HSCHE,3HNEW,4HBISM,
      14HPROV,4HCHEY,4HMADI,4HDENV,4HGRAN,4HBOIS,4HPOCA,4HBOST,4HGRAN,
      14HRAPI,4HCOLU,3HDES,4HLITT,4HATLA,4HSHRE,4HGREE,4HNASH,4HKNOX,
      14HEL P,4HDALL,4HMIDL,4HLYNC,4HNORF,4HPHOE,4HTUSC,4HTAMP,4HTALL,
      14HW. P,4HJACK,4HLAKE,3HNEW,4HCHAR,4HBROW,3HSAN,4HHONO,4HANNE,
      14HBETH,4HFAIR,4HSACR,4HFRES,3HSAN,3HLOS,4HE. S,4HCARI,4HPORT,
      14HNORT,4HOKLA,4HYAKI,4HWAIK,4HSEAT,4HCINC,4HORLA,4HEDIS,4HBRID,
      14HHART,4HAUGU,4HBANG,4HPLAI,4HWORC,4HCONC,4HNASH,4HBURL,4HMONT,
      14HRUTL/
       DATA XGR/0.,1.0,0.67,0.33,0.17,1.0,0.5/
       DATA WCF/0.,1.8,1.2,0.6,0.3,0.,0./
```

```
      3 WRITE(6,5)
      5 FORMAT(1H ,/5H 2.1 ,37HDO YOU WANT A LIST OF DEFAULT CITIES/
     1 1X, 16HENTER YES OR NO./)
        CALL ANSWER(IANS)
        IF(IANS.EQ.1) GO TO 40
    7    REWIND 8

        WRITE(6,10)
     10 FORMAT(1H /48H DEFAULT DATA IS PROVIDED ONLY FOR THE FOLLOWING,
       118H CITIES AND STATES/1X,26X,4H----//)
        REWIND 8
        DO 20 I=1,38
        READ(8,30)(ICITY(K),K=1,18)
        WRITE(6,35)(ICITY(K),K=1,18)
    35  FORMAT(1H ,18A4)
     20 CONTINUE
        REWIND 8
     30 FORMAT(18A4)
     40 WRITE(6,50)
     50 FORMAT(1H /4H 2.2,32H ENTER NAME OF STATE OF INTEREST///)
        READ(10,60)KSTATE,K1,K2,K3,K4
     60 FORMAT(5A4)
        DO 70 I=1,41
        IF(KSTATE.EQ.LISTS(I)) GO TO 90
     70 CONTINUE
        WRITE(6,80)KSTATE,K1,K2,K3,K4
     80 FORMAT(1H /4H 2.3,33H THERE ARE NO DEFAULT VALUES FOR ,5A4//)
        GO TO 3
     90 WRITE(6,100)
    100 FORMAT(1H /4H 2.4,31H ENTER NAME OF CITY OF INTEREST///)
        READ(10,60)KCITY,K5,K6,K7,K8
        DO 110 K=1,102
        IF(KCITY.EQ.LISTC(K))GO TO 120
    110 CONTINUE
        WRITE(6,80)KCITY,K5,K6,K7,K8
        WRITE(6,5)
        CALL ANSWER(IANS)
        IF(IANS.EQ.0) GO TO 7
        GO TO 90
   120  REWIND 9
        DO 150 MCITY=1,102
        READ(9,130)LSTATE,LCITY
    130 FORMAT(A4,1X,A4)
        IF(KSTATE.EQ.LSTATE.AND.KCITY.EQ.LCITY) GO TO 160
        READ(9,140)
    140 FORMAT(200(/))
    150 CONTINUE

        WRITE(6,155)KCITY,K5,K6,K7,K8,KSTATE,K1,K2,K3,K4
    155 FORMAT(1H /5H 2.5 ,10A4,28H CANNOT BE FOUND ON DEFAULT /
```

```
     1 1X, 23HCLIMATOLOGIC DATA FILE./)

      REWIND 9
      GO TO 3

  160 REWIND 11
      REWIND 4
      WRITE(11,165)KCDATA
  165 FORMAT(I5)
      WRITE(11,170)KSTATE,K1,K2,K3,K4,KCITY,K5,K6,K7,K8
  170 FORMAT(10A4)
      WRITE(11,180) MCITY
  180 FORMAT(I4)
      REWIND 11
      DO 200 K=1,185
      READ(9,190)NYEAR,(PREC(J),J=1,10),ICOUNT
      WRITE(4,190)NYEAR,(PREC(I),I=1,10),ICOUNT
  190 FORMAT(I10,10F5.2,I10)
  200 CONTINUE
      REWIND 7
      REWIND 4
      REWIND 13
C
C     LYEAR=0 INDICATES THAT ONLY ONE SET OF VALUES ARE GIVEN
C     IN THE DATA FILE AND THAT THIS IS THE LAST SET OF VALUES ON
C     THE DATA FILE.
C
      LYEAR=0
      READ(9,210) (TEMP(I),I=1,12)
  210 FORMAT(12F5.1)
      WRITE(7,220)LYEAR,(TEMP(I),I=1,12)
  220 FORMAT(I5,12F6.1)
      REWIND 7
      LYEAR=0
      READ(9,230) (RADI(I),I=1,12)
  230 FORMAT(6F6.1/6F6.1)
      WRITE(13,220)LYEAR,(RADI(I),I=1,12)
      REWIND 13
      LYEAR=0
      DO 250 I=1,13
      READ(9,240) (LDATEG(I),AREAG(I),AREAR(I),LDATER(I))
  240 FORMAT(I3,2F5.2,1X,I3)
  250 CONTINUE
      REWIND 9
      REWIND 5
      READ(5,252,END=255)IVEG
  252 FORMAT(15(/),I3)
      REWIND 5
      GO TO 258
  255 IVEG=0
```

```
      REWIND 5
  258 IF(IFLAG.EQ.1.AND.KVEG.GE.1.AND.KVEG.LE.7)GO TO 300
  260 WRITE(6,270)
  270 FORMAT(1H //5H 2.6 ,36H SELECT THE TYPE OF VEGETATIVE COVER,
     1//31H ENTER NUMBER 1 FOR BARE GROUND
     2/14X,21H2 FOR EXCELLENT GRASS
     3/14X,16H3 FOR GOOD GRASS
     4/14X,16H4 FOR FAIR GRASS
     5/14X,16H5 FOR POOR GRASS
     6/14X,20H6 FOR GOOD ROW CROPS
     7/14X,20H7 FOR FAIR ROW CROPS/)
  280 FORMAT(74A1)
      READ(10,280)(KLM(J),J=1,74)
      CALL SCAN(NO,VALUE,74,KLM)
      KVEG=VALUE(1)
      IF(KVEG.GE.1.AND.KVEG.LE.7) GO TO 295
      WRITE(6,290)KVEG
  290 FORMAT(1H //5H 2.7 ,I4,31H  INAPPROPRIATE VALUE TRY AGAIN///)
      GO TO 260
  295    WRITE(6,305)
  305 FORMAT(1H ,/5H 2.8 ,25HIF YOU ARE USING DEFAULT ,
     1  29HSOIL DATA AND THIS VEGETATION/9H TYPE IS ,
     2  36HNOT THE SAME AS USED IN THE DEFAULT ,
     3  16HSOIL DATA INPUT,/1X,21HYOU SHOULD ENTER THE ,
     4  38HTHE SOIL DATA AGAIN OR CORRECT THE SCS/
     5  21H RUNOFF CURVE NUMBER./)
  300 GR=WCF(KVEG)
      IF(KVEG.LE.5) GO TO 320
      DO 310 I=1,13
      LDAY13(I)=LDATER(I)
      XLAI13(I)=AREAR(I)*XGR(KVEG)
  310 CONTINUE
      GO TO 340
  320 DO 330 I=1,13
      LDAY13(I)=LDATEG(I)
      XLAI13(I)=AREAG(I)*XGR(KVEG)
  330 CONTINUE
       WRITE(6,332)
  332 FORMAT(1H /5H 2.9 ,33HENTER THE EVAPORATIVE ZONE DEPTH ,
     1  10HIN INCHES.//1X,24HCONSERVATIVE VALUES ARE:/
     2  10X,20H4 IN. FOR BAREGROUND/9X,
     3  21H10 IN. FOR FAIR GRASS/
     4  9X,26H18 IN. FOR EXCELLENT GRASS/)

      READ(10,280)(KLM(J),J=1,74)
      CALL SCAN(NO,VALUE,74,KLM)
      RDEPTH=VALUE(1)
      REWIND 16
      WRITE(16,335)RDEPTH
  335 FORMAT(F8.2)
```

```
      REWIND 16
      REWIND 14
  340 DO 360 I=1,13
      WRITE(14,350)LYEAR,LDAY13(I),XLAI13(I)
  350 FORMAT (I5,I8,F8.2)
  360 CONTINUE
      LYEAR=0
      WRITE(15,370)LYEAR,GR
  370 FORMAT(I5,F8.2)
      WRITE(14,380)KVEG
      REWIND 14
  380 FORMAT(I3)
      REWIND 15
      WRITE(15,370)LYEAR,GR
      REWIND 15
      KFLAG=1
      IFLAG=0
      RETURN
      END
```

```
C
C      ************************ DLAIS ************************
C
C
C     SUBROUTINE DLAIS COMPUTES THE DAILY POTENTIAL CHANGES
C     IN THE LEAF AREA INDEX FOR A YEAR.
C
      SUBROUTINE DLAIS(DLAI,XLAI1)
      DIMENSION DLAI(367)
      COMMON/BLK10/LDAY13(13),XLAI13(13)

C
C     XLAI1 IS THE LEAF AREA INDEX FOR THE FIRST DAY OF THE YEAR.
C
      XLAI1=XLAI13(1)
      DLAI(1)=0.0

      DO 20 I=1,12
        J=I+1
        DXLAI=XLAI13(J)--XLAI13(I)
        DLDAY=FLOAT(LDAY13(J)-LDAY13(I))
        DELAI=DXLAI/DLDAY
        IDAY=LDAY13(I)+1
        JDAY=LDAY13(J)+1

        DO 10 K=IDAY,JDAY
          DLAI(K)=DELAI
   10   CONTINUE
   20 CONTINUE
      RETURN
      END
```

```
C
C        ************************ DRAIN ************************
C
C
C     SUBROUTINE DRAIN CONTROLS THE COMPUTATION OF VERTICAL
C     WATER ROUTING, LATERAL SUBSURFACE DRAINAGE AND
C     PERCOLATION FOR A SUBPROFILE.
C
      SUBROUTINE DRAIN(FIN,ITER,DRN,PRC,ET,NSEGB,NSEGE,LAYB,
     1   LAYE,BALY,HED,FLEAK,ADDRUN,QDRN,BALT,QPERCY,QLATY,
     2  ISAND)
      COMMON/BLK7/STHICK(16),UL(16),FCUL(16),WPUL(16),SWUL(16),
     1   RCUL(16)
      COMMON/BLK4/LAYER(10),THICK(9),LAY
      COMMON/BLK3/SLOPE(9),XLENG(9)

      DIMENSION SWULY(16),ET(16),BALY(16),BALT(16),DRIN(17),E(16)

      IBAR=0
      LAT=0
      NSEGL=NSEGE
C
C     IBAR=1 IF THERE IS A BARRIER LAYER, NSEGL IS THE NUMBER OF
C     THE LOWER NON-BARRIER SEGMENT IN THE SUBPROFILE, AND NSEGE
C     IS THE BOTTOM SEGMENT OF THE SUBPROFILE.
C
      LAYD=LAYE-1
      IF(LAYER(LAYE).EQ.3.OR.LAYER(LAYE).EQ.5)IBAR=1

      IF(IBAR.EQ.1)NSEGL=NSEGE-1
C
C     LAT=1 IF THERE IS A LATERAL DRAINAGE LAYER.
C
      DO 10    L=LAYB,LAYE
      IF(LAYER(L).EQ.2)LAT=1
   10 CONTINUE

      IF(LAYER(LAYB).EQ.3.OR.LAYER(LAYB).EQ.5)NSEGL=NSEGE

      IF(LAYER(LAYE).EQ.2)LAT=0

      IF(NSEGL.EQ.NSEGE)IBAR=0
C
C     DT IS THE MODELING PERIOD AND F AND E ARE INFILTRATION
C     AND EVAPOTRANSPIRATION OCCURRING DURING THE PERIOD.
C
      DT=1./FLOAT(ITER)

      F=FIN*DT
```

```
      DO 20   J=NSEGB,NSEGE
      SWULY(J)=SWUL(J)
      E(J)=ET(J)*DT
   20 CONTINUE

      EPS=0.05
      ADDRUN=0.0
      HED=0.0
      PRC=0.0
      DRN=0.0
      IF(LAT.EQ.0)QLAT=0.0
      IF(LAT.EQ.0)QLATY=0.0
      DO 80   K=1,ITER
      TH=0.0
      EXCESS=0.0
      KK=0
C
C     KK IS THE COUNTER FOR THE ITERATIONS IN THE
C     CONVERGENCE ROUTINE.
C
   30 KK=KK+1
      MFLAG=0
       DRIN(NSEGB)=F
C
C     AVROUT COMPUTES FREE DRAINAGE, VERTICAL WATER ROUTING.
C
         CALL AVROUT(DRIN,NSEGB,NSEGL,E,DT,BALY,BALT,SWULY,
     1   QDRN,IBAR,QPERCY,QLATY,DRNMAX,ISAND)

         IF(IBAR.EQ.0)QPERC=DRIN(NSEGL+1)/DT
       IF(IBAR.EQ.0)QPERCY=QPERC
C
C     PROFIL DISTRIBUTES WATER BACK UP THE SUBPROFILE
C     WHEN A SEGMENT IS SUPERSATURATED.
C
       CALL PROFIL(KK,EXCESS,NSEGB,NSEGL,SWULY,E,BALT,DRIN,BALY)
       IF(IBAR.EQ.0) GO TO 65
C
C     HEAD COMPUTES THE GRAVITATIONAL HEAD ON THE
C     TOP OF THE BARRIER LAYER.
C
         CALL HEAD(TH,NSEGB,NSEGL,QOUTMX,E,DRIN,DT)

       IF(QOUTMX.GT.(DRNMAX/DT))QOUTMX=DRNMAX/DT


         IF(LAT.EQ.0.AND.LAYER(LAYE).EQ.3)QPERC=RCUL(NSEGE)*
     1     (TH+STHICK(NSEGE))/STHICK(NSEGE)
         IF(LAT.EQ.0.AND.LAYER(LAYE).EQ.5)
     1     QPERC=FLEAK*RCUL(NSEGE)*(TH+STHICK(NSEGE))
```

```
     1      /STHICK(NSEGE)
      IF(TH.LE.0.0)QPERC=0.0
         IF(LAT.EQ.0.AND.QPERC.GT.QOUTMX)QPERC=QOUTMX
C
C     LATKS COMPUTES THE EFFECTIVE LATERAL HYDRAULIC CONDUCTIVITY.
C
         IF(LAT.EQ.1) CALL LATKS(TH,NSEGB,NSEGL,ELKS)
C
C     LATFLO COMPUTES THE LATERAL DRAINAGE RATE AND PERCOLATION
C     RATE IF THERE IS A LATERAL DRAINAGE LAYER.
C
         IF(LAT.EQ.1) CALL LATFLO(LAYD,NSEGE,TH,FLEAK,ELKS,QLAT,
     1      QPERC,QOUTMX,LAYE)
C
C     QPERC IS THE PERCOLATION RATE THROUGH THE BOTTOM OF THE
C     SUBPROFILE AND QLAT IS THE LATERAL DRAINAGE RATE FROM
C     THE LATERAL DRAINAGE LAYER.
C
         QDR = QPERC+QLAT

         CALL CONVRG(KK,QDR,QDRN,EST,EPS,MFLAG,TOP,BOT)

         QDRN=EST

       IF(QDRN.GT.(DRNMAX/DT))QDRN=DRNMAX/DT
         IF(MFLAG.EQ.1) GO TO 60

         IF(KK.GT.10) GO TO 60
C
C     QPERCY IS THE PERCOLATION COMPONENT.
C
   32  QPERCY=(QPERCY+QPERC)/2.0
       QLATY=(QLAT+QLATY)/2.0
       IF(LAT.EQ.0)QLATY=0.0
       QDR=QPERCY+QLATY
       IF(QDR.LE.0.0)GO TO 38
       QLATY=QLATY*QDRN/QDR
       QPERCY=QPERCY*QDRN/QDR
       IF(MFLAG.EQ.1.OR.KK.GT.10)GO TO 75
      GO TO 30
   38 QPERCY=0.0
      QLATY=0.0
       QDRN=0.0
       IF(MFLAG.EQ.1.OR.KK.GT.10)GO TO 75
      GO TO 30


   60 CONTINUE
      IF(KK.GE.2)GO TO 65
       QPERCY=(QPERCY+QPERC)/2.0
```

```
150.            QLATY=(QLATY+QLAT)/2.0
151.            QDRN=QLATY+QPERCY
152.           GO TO 30
153.     C
154.     C     REINITIALIZES SOIL WATER CONTENTS AND CHANGES IN STORAGE.
155.     C
156.       65  IF(NSEGB.EQ.1)SWUL(1)=SWUL(1)-EXCESS
157.           IF(NSEGB.EQ.1)DRIN(1)=DRIN(1)-EXCESS
158.           IF(NSEGB.EQ.1)BALT(1)=BALT(1)-EXCESS
159.              DO 70 J=NSEGB,NSEGL
160.              BALY(J)=BALT(J)
161.              SWULY(J)=SWUL(J)
162.        70 CONTINUE
163.           MFLAG=1
164.     C
165.     C     SUMS THE PERCOLATION AND DRAINAGE FOR A DAY OF SIMULATION.
166.     C
167.           ADDRUN=ADDRUN+EXCESS
168.           PRC=PRC+QPERCY*DT
169.           DRN=DRN+QLATY*DT
170.           HED=HED+TH*DT
171.            IF(IBAR.EQ.0)GO TO 80
172.            GO TO 32
173.       75    QDRN=QPERCY+QLATY
174.
175.        80 CONTINUE
176.
177.           RETURN
178.           END
```

```
C************************ DSDATA ************************
C
      SUBROUTINE DSDATA
      COMMON/BLK1/KCDATA,KSDATA,KFLAG,IFLAG,KVEG
C
C     THIS SUBROUTINE PREPARES SOIL DATA INPUT FILES
C    DATA TAPE.
C     TAPE12 CONTAINS DEFAULT SOIL DATA
C     TAPE5 CONTAINS THE SELECTED DEFAULT DATA AND DESIGN
C     INPUT
      DIMENSION ITITLE(3,40),XMIR(21),XPOROS(21),XRC(21),
     1  XCONA(21),XA0(7),XA1(7),XA2(7),CORECT(7),
     2KLM(74),VALUE(10),THICK(9),KSOIL(9),PORO(9),FC(9),
     3WP(9),RC(9),CON(9),AWC(9),LAYER(10),XFC(21),XWP(21)
      IFLAG=0
      WRITE(6,10)
   10 FORMAT(1H ///14X,25HUSE ONLY ENGLISH UNITS OF,
     116H INCHES AND DAYS/,22X,16HUNLESS OTHERWISE,
     210H INDICATED//23(1H#),20HANSWER ALL QUESTIONS,
     322(1H#)/,66(1H*)/11X,
     444HA VALUE **MUST** BE ENTERED FOR EACH COMMAND/,
     5 17X,28HEVEN WHEN THE VALUE IS ZERO./
     666(1H*)//)
      WRITE (6,20)
   20 FORMAT(1H //4H 4.1,23H ENTER TITLE ON LINE 1,/
     146H ENTER LOCATION OF SOLID WASTE SITE ON LINE 2,/
     234H AND ENTER TODAY'S DATE ON LINE 3.///)
      DO 40 J=1,3
      READ(10,30) (ITITLE(J,I),I=1,40)
   30 FORMAT (80A1)
   40 CONTINUE
C
C    READS ENTIRE DEFAULT DATA FILE TAPE 12.
C
      REWIND 12
      DO 60 I=1,21
      READ(12,50)XMIR(I),XPOROS(I),XFC(I),XWP(I),XRC(I),XCONA(I)
   50 FORMAT(6F12.7)
   60 CONTINUE
      DO 80 I=1,7
      READ(12,70)XA0(I),XA1(I),XA2(I)
   70 FORMAT(5F10.2)
   80 CONTINUE
      READ(12,90) (CORECT(I),I=1,7)
   90 FORMAT(7F6.2)
      REWIND 12
      WRITE(6,100)
  100 FORMAT(1H ,/5H 4.2 ,32HFOUR TYPES OF LAYERS MAY BE USED,
     115H IN THE DESIGN:/23H VERTICAL PERCOLATION, ,
```

```
     2 18HLATERAL DRAINAGE, ,
     3 24HBARRIER SOIL, AND WASTE.//
     4 1X,24HLATERAL DRAINAGE IS NOT ,
     337HPERMITTED FROM A VERTICAL PERCOLATION/7H LAYER./
     456H BOTH VERTICAL AND LATERAL DRAINAGE IS PERMITTED FROM A ,
     57HLATERAL/16H DRAINAGE LAYER./1X,21HA BARRIER SOIL LAYER ,
     642HSHOULD BE DESIGNED TO INHIBIT PERCOLATION./1X,
     7 39HAN IMPERMEABLE LINER MAY BE USED ON TOP ,
     8 27H OF ANY BARRIER SOIL LAYER./11H THE WASTE ,
     750HLAYER SHOULD BE DESIGNED TO PERMIT RAPID DRAINAGE /1X,
     821HFROM THE WASTE LAYER./)
      WRITE(6,107)
107   FORMAT(1H /7H RULES://27H THE TOP LAYER CANNOT BE A ,
     1 19HBARRIER SOIL LAYER.)
      WRITE(6,105)
105   FORMAT(30H A BARRIER SOIL LAYER MAY NOT ,
     1 29HBE PLACED ADJACENT TO ANOTHER /
     2 20H BARRIER SOIL LAYER./20H ONLY A BARRIER SOIL,
     3 47H LAYER OR ANOTHER LATERAL DRAINAGE LAYER MAY BE/
     4 48H PLACED DIRECTLY BELOW A LATERAL DRAINAGE LAYER./
     5 40H YOU MAY USE UP TO 9 LAYERS AND UP TO 3 ,
     6 20HBARRIER SOIL LAYERS.//17H ENTER THE NUMBER,
     7 26H OF LAYERS IN YOUR DESIGN./)
      DO 108 I=1,9
      THICK(I)=0.0
      FC(I)=0.0
      WP(I)=0.0
      RC(I)=0.0
      CON(I)=0.0
      PORO(I)=0.0
      LAYER(I)=0
108   CONTINUE
      FRUNOF=1.0
      FLEAK=1.0
      LAYER(10)=0
      LINER=0
110   READ(10,120) (KLM(I),I=1,74)
120   FORMAT(74A1)
      CALL SCAN(NO,VALUE,74,KLM)
      LAY=VALUE(1)
      IF (LAY.EQ.1) GO TO 140
      IF(LAY.GT.1.AND.LAY.LE.9) GO TO 160
      WRITE(6,130)
130   FORMAT(1H ,/5H 4.5 ,27HYOU MAY HAVE 1 TO 9 LAYERS./
     1 43H ENTER THE NUMBER OF LAYERS IN YOUR DESIGN.//)
      GO TO 110
140   WRITE(6,150)
150   FORMAT(1H ,/5H 4.4 ,36HSOIL LAYER 1 IS THE ONLY SOIL LAYER./)
      GO TO 180
160   WRITE(6,170)LAY
```

```
 170   FORMAT(1H ,4H4.3 ,33HTHE LAYERS ARE NUMBERED SUCH THAT/
C
C     START OF LOOP TO ENTER THICKNESSES AND SOIL TEXTURES
C     OF THE LAYES.
C
     1 30H SOIL LAYER 1 IS THE TOP LAYER/
     2 15H AND SOIL LAYER,I2,21H IS THE BOTTOM LAYER./)
 180   ILAY=1
       ISAND=0
       WRITE(6,185)
 185   FORMAT(1H /5H 4.6 ,32HIS THE TOP LAYER AN UNVEGETATED ,
     1 21HSAND OR GRAVEL LAYER/17H ENTER YES OR NO./)
       CALL ANSWER(IANS)
       IF(IANS.EQ.0)ISAND=1
 190   WRITE(6,200)ILAY
  200  FORMAT(1H ,/5H 4.7 ,29HENTER THICKNESS OF SOIL LAYER,I2,
     1 11H IN INCHES.)
       READ(10,120)(KLM(J),J=1,74)
       CALL SCAN(NO,VALUE,74,KLM)
       THICK(ILAY)=VALUE(1)
       IF(THICK(ILAY).GT.0.0)GO TO 211
       WRITE(6,210)
 210   FORMAT(1H ,/5H 4.8 ,36HTHICKNESS MUST BE GREATER THAN ZERO.)
       GO TO 190
 211   WRITE(6,212) ILAY
 212   FORMAT(1H ,/5H 4.9 ,30HENTER THE LAYER TYPE FOR LAYER,I2,1H./)
       IF(ILAY.EQ.1) WRITE(6,213)
 213   FORMAT(1H /47H 4.10 ENTER 1 FOR A VERTICAL PERCOLATION LAYER,/
     1 12X,31H2 FOR A LATERAL DRAINAGE LAYER,/
     2 12X,27H3 FOR A BARRIER SOIL LAYER,/
     3 12X,24H4 FOR A WASTE LAYER, AND/
     4 12X,31H5 FOR A BARRIER SOIL LAYER WITH/
     5 14X,21HAN IMPERMEABLE LINER./)
       READ(10,120) (KLM(J),J=1,74)
       CALL SCAN(NO,VALUE,74,KLM)
       LAYER(ILAY)=VALUE(1)
      IF(LAYER(ILAY).LT.1.OR.LAYER(ILAY).GT.5)WRITE(6,215)
     1    LAYER(ILAY)
 215  FORMAT(1H /5H 4.11,I4,32H INAPPROPRIATE VALUE--TRY AGAIN./)
       IF(LAYER(ILAY).LT.1.OR.LAYER(ILAY).GT.5) GO TO 211
       ILAYM1=ILAY-1
      IF(ILAY.EQ.1) GO TO 216
       IF(LAYER(ILAYM1).NE.2) GO TO 217
       IF(LAYER(ILAY).EQ.2) GO TO 218
       IF(LAYER(ILAY).EQ.3) GO TO 218
       IF(LAYER(ILAY).EQ.5) GO TO 218
       WRITE(6,214)
 214   FORMAT(1H ,/6H 4.13 ,35HEITHER A LATERAL DRAINAGE LAYER OR ,
     125HA BARRIER SOIL LAYER MUST/7H FOLLOW,
     21X,10HA LATERAL ,
```

```
     327HDRAINAGE LAYER.--TRY AGAIN.//)
       GO TO 211
216    CONTINUE
      IF(LAYER(1).EQ.3.OR.LAYER(1).EQ.5)WRITE(6,222)
222   FORMAT(6H 4.12 ,22HTHE TOP LAYER MAY NOT ,
     1 24HBE A BARRIER SOIL LAYER./)
      IF(LAYER(1).EQ.3.OR.LAYER(1).EQ.5)GO TO 211
      GO TO 218
217   CONTINUE
      IF(LAYER(ILAYM1).NE.3.AND.LAYER(ILAYM1).NE.5)GO TO 218
      IF(LAYER(ILAY).NE.3.AND.LAYER(ILAY).NE.5)GO TO 218
      WRITE(6,224)
224   FORMAT(6H 4.14 ,21HA BARRIER SOIL LAYER ,
     1 33HMAY NOT BE PLACED DIRECTLY BELOW /
     2 28H ANOTHER BARRIER SOIL LAYER./)
       GO TO 211
218    CONTINUE
       IF(LAYER(ILAY).EQ.5)LINER=LINER+1
       WRITE(6,230)ILAY
230    FORMAT(1H ,/38H 4.15 ENTER SOIL TEXTURE OF SOIL LAYER,I2,1H.)
       IF(ILAY.EQ.1) WRITE(6,240)
240    FORMAT(1H ,/6H 4.16 ,33HENTER A NUMBER (1 THROUGH 23) FOR,
     1  9H TEXTURE ,23HCLASS OF SOIL MATERIAL.//4X,
     249H**CHECK USER'S GUIDE FOR NUMBER CORRESPONDING TO ,
     1    12HSOIL TYPE.**//)
       READ(10,120) (KLM(J),J=1,74)
       CALL SCAN(NO,VALUE,74,KLM)
       KSOIL(ILAY)=VALUE(1)
       ISOIL=KSOIL(ILAY)
       IF(ISOIL.GE.1.AND.ISOIL.LE.23) GO TO 260
       WRITE(6,250) ISOIL
250    FORMAT(1H ,/6H 4.17 ,I3,28H  INAPPROPRIATE SOIL TEXTURE,
C
C      ROUTINE TO ENTER MANUAL SOIL CHARACTERISTICS
C      FOR SOIL TEXTURES 22 AND 23.
C
     19H NUMBER--,10HTRY AGAIN.//)
       GO TO 218
260    IF(ISOIL.LT.22) GO TO 268
       WRITE(6,261)
261    FORMAT(1H ,5H4.18 ,31HENTER THE POROSITY OF THE LAYER,
     1 12H IN VOL/VOL.//)
       READ(10,120) (KLM(J),J=1,74)
       CALL SCAN(NO,VALUE,74,KLM)
       PORO(ILAY)=VALUE(1)
262    FORMAT(1H ,5H4.19 ,31HENTER THE FIELD CAPACITY OF THE,
     118H LAYER IN VOL/VOL.//)
       WRITE(6,262)
       READ(10,120) (KLM(J),J=1,74)
       CALL SCAN(NO,VALUE,74,KLM)
```

```
      FC(ILAY)=VALUE(1)
      WRITE(6,263)
263   FORMAT(1H ,/6H 4.20 ,30HENTER THE WILTING POINT OF THE,
     118H LAYER IN VOL/VOL.//)
      READ(10,120) (KLM(J),J=1,74)
      CALL SCAN(NO,VALUE,74,KLM)
      WP(ILAY)=VALUE(1)
      WRITE (6,264)
264   FORMAT(1H ,/6H 4.21 ,32HENTER THE HYDRAULIC CONDUCTIVITY,
     127H OF THE LAYER IN INCHES/HR.//)
      READ(10,120) (KLM(J),J=1,74)
      CALL SCAN(NO,VALUE,74,KLM)
      RC(ILAY)=VALUE(1)
      WRITE(6,265)
265   FORMAT(1H ,/6H 4.22 ,22HENTER THE EVAPORATION ,
     139HCOEFFICIENT OF THE LAYER IN MM/DAY**.5.//)
      READ(10,120) (KLM(J),J=1,74)
C
C     ASSIGNS THE DEFAULT SOIL CHARACTERISTICS TO THE LAYER.
C
      CON(ILAY)=VALUE(1)
      GO TO 219
268   RC(ILAY)=XRC(ISOIL)
      CON(ILAY)=XCONA(ISOIL)
      PORO(ILAY)=XPOROS(ISOIL)
      FC(ILAY)=XFC(ISOIL)
      WP(ILAY)=XWP(ISOIL)
      IF(ISOIL.GE.19) GO TO 219
269   WRITE(6,270) ILAY
270   FORMAT(1H ,/6H 4.23 ,13HIS SOIL LAYER,I2,11H COMPACTED/
     117H ENTER YES OR NO.//)
      IF(LAYER(ILAY).EQ.3.OR.LAYER(ILAY).EQ.13)WRITE(6,275)
275   FORMAT(1H ,/6H 4.25 ,25HTHE BARRIER SOIL LAYER IS,
     1  21H GENERALLY COMPACTED.//)
      IF(ILAY.EQ.1) WRITE(6,280)
280   FORMAT(5H 4.24,39H THE VEGETATIVE SOIL LAYER IS GENERALLY,
     115H NOT COMPACTED.//)
      CALL ANSWER (IANS)
      IF(IANS.EQ.1) GO TO 219
      GW=PORO(ILAY)-FC(ILAY)
      PAW=FC(ILAY)-WP(ILAY)
      FC(ILAY)=WP(ILAY)+0.75*PAW
      PORO(ILAY)=FC(ILAY)+0.75*GW
      RC(ILAY)=RC(ILAY)/20.0
C
C     INPUT IS COMPLETED. NEXT, CHECK TO SEE IF THE BOTTOM
C     LAYER IS A BARRIER SOIL LAYER.
C
      CON(ILAY)=3.1
219   ILAY=ILAY+1
```

```
      IF(ILAY.LE.LAY) GO TO 190
      ILAYM1=ILAY-1
      IF(LAYER(ILAYM1).NE.2) GO TO 225
      IF(ILAYM1.GE.9) GO TO 221
      WRITE(6,220)
220   FORMAT(1H ,/6H 4.26 ,30HA BARRIER LAYER SHOULD BE USED
     1  ,11H BELOW THE /
     1 31H BOTTOM LATERAL DRAINAGE LAYER.//22H DO YOU WANT TO ENTER ,
     2 25HDATA FOR A BARRIER LAYER/17H ENTER YES OR NO.//1X,
     3 48HIF NO IS ENTERED, THE MODEL ASSUMES THAT LATERAL/
     4 47H DRAINAGE DOES NOT OCCUR FROM THE BOTTOM LAYER.//)
      CALL ANSWER(IANS)
      IF(IANS.EQ.1) GO TO 225
      LAY=LAY+1
      GO TO 190
221   WRITE(6,322)
322   FORMAT(1H ,/6H 4.27 ,32HA BARRIER LAYER SHOULD HAVE BEEN,
     1  11H SPECIFIED./1X,
     1 48HTHE MODEL ASSUMES THAT LATERAL DRAINAGE DOES NOT/
     2 29H OCCUR FROM THE BOTTOM LAYER.//)
225   IF(LINER.EQ.0) GO TO 229
226   WRITE(6,227)
227   FORMAT(1H ,/6H 4.28 ,32HWHAT FRACTION OF THE AREA DRAINS,
     1  9H THROUGH ,21HLEAKS IN THE MEMBRANE/1X,
     1  40HOR WHAT FRACTION OF THE DAILY POTENTIAL ,
     2  23HPERCOLATION THROUGH THE/14H BARRIER SOIL ,
     3  30HLAYER OCCURS ON THE GIVEN DAY/1X,
     322HENTER BETWEEN 0 AND 1.//)
      READ(10,120) (KLM(J),J=1,74)
      CALL SCAN(NO,VALUE,74,KLM)
      FLEAK=VALUE(1)
      IF(FLEAK.GE.0.0.AND.FLEAK.LE.1.0) GO TO 229
      WRITE(6,228)
228   FORMAT(1H ,/6H 4.29 ,31HINAPPROPRIATE VALUE--TRY AGAIN.//)
C
C     CHECKS IF THE VEGETATIVE TYPE HAS ALREADY BEEN ENTERED
C     DURING THIS SESSION.
C
      GO TO 226
229   CONTINUE
290   CONTINUE
390   IF(LAYER(1).EQ.4) GO TO 451
400   IF (KFLAG.EQ.1.AND.KVEG.GE.1.AND.KVEG.LE.7) GO TO 443
410   WRITE(6,420)
420   FORMAT(1H //42H 4.30 SELECT THE TYPE OF VEGETATIVE COVER.,
     1//31H ENTER NUMBER 1 FOR BARE GROUND/
     214X,21H2 FOR EXCELLENT GRASS/
     314X,16H3 FOR GOOD GRASS/
     414X,16H4 FOR FAIR GRASS/
     514X,16H5 FOR POOR GRASS/
```

```
     614X,20H6 FOR GOOD ROW CROPS/
     714X,20H7 FOR FAIR ROW CROPS///)
       READ(10,120) (KLM(J),J=1,74)
430    FORMAT(74A1)
       CALL SCAN(NO,VALUE,74,KLM)
       KVEG=VALUE(1)
       IF(KVEG.GE.1.AND.KVEG.LE.7) GO TO 450
       WRITE(6,440) KVEG
440    FORMAT(1H //5H 4.31,I4,30H INAPPROPRIATE VALUE-TRY AGAIN///)
       GO TO 410
450    WRITE(6,445)
445    FORMAT(1H ,/6H 4.32 ,25HIF YOU ARE USING DEFAULT ,
     1  21HCLIMATOLOGIC DATA AND/1X,5HTHIS ,
     2  39HVEGETATION TYPE IS NOT THE SAME USED IN/1X,
C
C     CORECT ADJUSTS THE HYDRAULIC CONDUCTIVITY FOR VEGETATION.
C
     3  39HTHE CLIMATOLOGIC DATA INPUT, YOU SHOULD/1X,
     434HENTER THE CLIMATOLOGIC DATA AGAIN./)

443    IFLAG=1
       IF(KSOIL(1).LT.22)RC(1)=CORECT(KVEG)*RC(1)
       WRITE(6,446)
446    FORMAT(1H /5H 4.33,36H DO YOU WANT TO ENTER A RUNOFF CURVE/1X,
     1  38HNUMBER AND OVERRIDE THE DEFAULT VALUE/
     2 17H ENTER YES OR NO./)
       CALL ANSWER(IANS)
       IF(IANS.EQ.0) GO TO 447

       ISOIL=KSOIL(1)
       CN2=(XA0(KVEG)+XA1(KVEG)*XMIR(ISOIL)+XA2(KVEG)*
     1XMIR(ISOIL)**2)
      GO TO 455
447    WRITE(6,448)
448    FORMAT(1H /5H 4.34,31H ENTER SCS RUNOFF CURVE NUMBER ,
     1  21H(BETWEEN 15 AND 100).)
C
C     OPEN IS CALLED WHEN THE TOP LAYER IS A WASTE LAYER.
C
       READ(10,120)(KLM(J),J=1,74)
C
C     WRITES THE SELECTED AND ENTERED DATA ON DATA FILE TAPE 5
C     WHICH HAS ITS LINES NUMBERED.
C
       CALL SCAN(NO,VALUE,74,KLM)
       CN2=VALUE(1)
       GO TO 455
451 CALL OPEN(CN2,FRUNOF)
455 JCOUNT=4
    REWIND 5
```

```
      DO 458 J=1,3
      WRITE(5,30) (ITITLE(J,I),I=1,40)
  458 CONTINUE
      WRITE(5,460)LAY,LINER,FLEAK,FRUNOF,CN2,JCOUNT
  460 FORMAT(2I2,3F12.6,I7)
      JCOUNT=5
      WRITE(5,470)(THICK(J),J=1,9),JCOUNT
  470 FORMAT(9F7.2,I7)
      JCOUNT=6
      WRITE(5,480)(POROO(J),J=1,9),JCOUNT
  480 FORMAT(9F7.4,I7)
      JCOUNT=7
      WRITE(5,480)(FC(J),J=1,9),JCOUNT
      JCOUNT=8
      WRITE(5,480)(WP(J),J=1,9),JCOUNT
      JCOUNT=9
      WRITE(5,485)(CON(J),J=1,9),JCOUNT
  485 FORMAT(9F7.3,I7)
      JCOUNT=10
      WRITE(5,490)(RC(J),J=1,5),JCOUNT
C
C     SITE IS CALLED TO SECURE DESIGN DATA.
C
  490 FORMAT(5F13.8,I7)
      JCOUNT=11
      WRITE(5,500)(RC(J),J=6,9),JCOUNT
  500 FORMAT(4F13.8,I7)
      CALL SITE(LAYER,LAY,KVEG,ISAND)
       KFLAG=0
       RETURN
       END
```

```
C
C       ************************* ETCHK *************************
C
C
C     SUBROUTINE ETCHK CORRECTS THE PLANT TRANSPIRATION FOR LIMITING
C     SOIL WATER CONDITIONS IN THE MANNER OF SAXTON AND SHANHOLTZ.
C

      SUBROUTINE ETCHK(ET,ETT,ESS,EP,ES,WF,BALT)

      COMMON/BLK7/STHICK(16),UL(16),FCUL(16),WPUL(16),SWUL(16)
     1 ,RCUL(16)
      DIMENSION ET(16),WF(7),BALT(16)
C
C     COMPUTES THE DEPTH WEIGHTED PLANT AVAILABLE WATER CAPACITY
C     IN VOL/VOL.
C
      PAWC=0.0
      DO 10 J=1,7
      PAWC=PAWC+WF(J)*(SWUL(J)+BALT(J)/2.-WPUL(J))/(FCUL(J)-WPUL(J))

   10 CONTINUE
C
C     COMPUTES THE RATIO OF ACTUAL OR LIMITED PLANT TRANSPIRATION
C     TO POTENTIAL PLANT TRANSPIRATION.
C
      PEFF=1.20+PAWC-(4.0*EP)
      IF(PEFF.LT.0.0)PEFF=0.0

      IF(PEFF.GT.1.0)PEFF=1.0
      EXTRA=0.0
      ETT=ESS
C
C     COMPUTES ACTUAL EVAPOTRANSPIRATION FROM EACH SEGMENT AND,
C     IF GREATER THAN THE WATER AVAILABLE IN A SEGMENT, THE
C     DEMAND IS DISTRIBUTED TO LOWER SEGMENTS UNTIL DRY.
C
      DO 30 J=1,7
      PAWCUL=SWUL(J)+BALT(J)/2.-WPUL(J)
      ET(J)=WF(J)*(PEFF*EP+ES)+EXTRA
      EXTRA=0.0
      IF(ET(J).LT.PAWCUL) GO TO 20
      EXTRA=ET(J)-PAWCUL
      ET(J)=PAWCUL
   20 IF(ET(J).LT.0.0)ET(J)=0.0
      ETT=ETT+ET(J)
   30 CONTINUE
      RETURN
      END
```

```
C
C      ************************ ETCOEF ************************
C
C
C     SUBROUTINE ETCOEF COMPUTES COEFICIENTS FOR EVAPOTRANSPIRATION.
C
      SUBROUTINE ETCOEF(WF,CONA,STAGE1,STHICK)

      COMMON/BLK9/CONUL(16)
      DIMENSION WF(7),STHICK(16)
C
C     COMPUTES THE EFFECTIVE DEPTH-WEIGHTED
C     EVAPORATION(TRANSMISSIVITY) COEFFICIENT.
C
      CONA=0.0
      DO 10 J=1,7
   10   CONA=CONA+(WF(J)*CONUL(J)/STHICK(J))
      IF(CONA.LT.3.1)CONA=3.1
C
C     COMPUTES THE UPPER LIMIT OF STAGE ONE SOIL EVAPORATION.
C
      STAGE1=(9.0*(CONA-3.0)**0.42)/25.4

      RETURN
      END
```

```
C
C      ************************ EVAPOT ************************
C
C
C     SUBROUTINE EVAPOT COMPUTES DAILY SURFACE EVAPORATION,
C     SOIL EVAPORATION AND POTENTIAL PLANT TRANSPIRATION.
C
      SUBROUTINE EVAPOT(SWULE,ET,PINF,SNO,T,ES1T,TET,ESS,WF,EP,ES)
      COMMON/BLK8/PRE(370),TMPF(366),RAD(366),DLAI(367),GR,XLAI1
      COMMON/BLK11/ETO(366),XLAI,STAGE1,CONA,RAIN,RUN,IDA

      DIMENSION ET(16),WF(7)

      EP=0.0
      ES=0.0
       ES1=0.0
       ES2=0.0

      ESS=ETO(IDA)

      SURFSW=SNO+RAIN-RUN
C
C     COMPUTES SURFACE EVAPORATION; IT IS LIMITED BY THE
C     POTENTIAL DEMAND, RAINFALL AND SNOW. SURFACE EVAPORATION
C     IS SUBTRACTED FROM THE INFILTRATION OR SNOW.
C
      IF(ESS.GT.SURFSW)ESS=SURFSW
      IF(ESS.LT.0.0)ESS=0.0

      PINF=RAIN-RUN-ESS

      IF(PINF.GE.0.0) GO TO 10

      SNO=SNO+PINF

      PINF=0.0
C
C     SOIL EVAPORATION AND PLANT TRANSPIRATION IS NOT
C     PERMITTED IF THE TEMPERATURE IS BELOW 32 DEGREES F.
C
   10 IF(TMPF(IDA).LE.32.0) GO TO 20

      IF(ESS.GE.ETO(IDA)) GO TO 20

      ALAI=XLAI

      IF(ALAI.LT.GR)ALAI=GR
C
C     EXCESS ET DEMAND IS EXERTED ON SOIL EVAPORATION AFTER
```

```
C     DETERMINING THE SURFACE EVAPORATION; STAGE 1 IS IF ES1T IS
C     LESS THAN THE STAGE 1 LIMIT; ELSE, STAGE 2 EVAPORATION OCCURS.
C
      ESO=ETO(IDA)*EXP(-0.4*ALAI)

      IF(ES1T.GE.STAGE1) GO TO 30

      ES1=ETO(IDA)-ESS

      IF(ES1.GT.ESO)ES1=ESO

      ES1T=ES1T+ES1-PINF

      IF(ES1T.LT.0.0)ES1T=0.0

      T=0.0

      ES=ES1

      GO TO 40
C
C     NO EVAPOTRANSPIRATION OCCURS; ONLY SURFACE
C     EVAPORATION OCCURRED.
C
   20 TET=0.0
      EP=0.0
      ES=0.0

      ES1T=ES1T-PINF

      IF(ES1T.LT.0.0)ES1T=0.0

      GO TO 50
C
C     COMPUTES STAGE 2 SOIL EVAPORATION.
C
   30 T=T+1.0

      ES2=CONA*(T**0.5-(T-1.0)**0.5)/25.4

      IF(ES2.GT.(ETO(IDA)-ESS))ES2=ETO(IDA)-ESS

      IF(ES2.GT.ESO)ES2=ESO

      ES1T=ES1T+ES2-PINF

      IF(ES1T.LT.0.0)ES1T=0.0

      ES=ES2
C
```

```
C     COMPUTES POTENTIAL PLANT TRANSPIRATION.
C
   40 EP=ETO(IDA)*XLAI/3.0

      IF(EP.GT.(ETO(IDA)-ES-ESS))EP=ETO(IDA)-ES-ESS

      TET=ES+EP
C
C     DISTRIBUTES THE EVAPOTRANSPIRATION.
C
   50 DO 60 J=1,7

        ET(J)=TET*WF(J)
        IF(ET(J).LT.0.0)ET(J)=0.0
   60 CONTINUE

      RETURN
      END
```

```
C
C       ********************** HEAD **********************
C
C
C     SUBROUTINE HEAD COMPUTES THE GRAVITATIONAL
C     HEAD ON THE TOP OF THE BARRIER LAYER.
C
        SUBROUTINE HEAD(TH,NSEGB,NSEGL,QOUTMX,E,DRIN,DT)


      COMMON/BLK7/STHICK(16),UL(16),FCUL(16),WPUL(16),
     1   SWUL(16),RCUL(16)

      DIMENSION E(16),DRIN(17)

      GRVWAT=0.0
      TH=0.0
      ESAT=0.0
C
C     COMPUTES HEAD FROM THE BOTTOM TO THE TOP UNTIL A SEGMENT
C     IS REACHED THAT IS NOT SATURATED.
C
      DO 10   J=NSEGB,NSEGL
C
C     ESAT IS EVAPOTRANSPIRATION FROM THE SEGMENTS CONTRIBUTING
C     TO HEAD IN A HALF OF A TIME PERIOD.
C
      K=NSEGL+NSEGB-J
      ESAT=ESAT+E(K)/2.0

      IF(SWUL(K).LE.FCUL(K))GO TO 20
      XHEAD=STHICK(K)*(SWUL(K)-FCUL(K))/(UL(K)-FCUL(K))
C
C     GRVWAT IS THE QUANTITY OF DRAINABLE WATER
C     CONTRIBUTING TO HEAD AT MIDPERIOD.
C
      GRVWAT=GRVWAT+SWUL(K)-FCUL(K)
      IF(XHEAD.GT.STHICK(K))XHEAD=STHICK(K)+SWUL(K)-UL(K)

      TH=TH+XHEAD

      XHEAD=XHEAD+0.005
      IF(XHEAD.LT.STHICK(K)) GO TO 20

   10 CONTINUE
C
C     QOUTMX IS THE TOTAL DRAINABLE WATER AT THE END
C     OF THE TIME PERIOD.
C
```

```
   20 QOUTMX=(GRVWAT-ESAT+DRIN(K)/2.0)/DT
      IF(GRVWAT.LE.0.0)QOUTMX=0.0
      IF(QOUTMX.LT.0.0)QOUTMX=0.0
      RETURN
      END
```

```
C      ************************ LATFLO ************************
C
C
C     SUBROUTINE LATFLO COMPUTES THE LATERAL DRAINAGE
C     AND PERCOLATION FROM THE LATERAL DRAINAGE LAYER.
C
      SUBROUTINE LATFLO(LAYD,NSEGE,TH,FLEAK,ELKS,DRN,PRC,
     1  QOUTMX,LAYE)

      COMMON/BLK3/SLOPE(9),XLENG(9)

      COMMON/BLK7/STHICK(16),UL(16),FCUL(16),WPUL(16),
     1          SWUL(16),RCUL(16)

      COMMON/BLK4/LAYER(10),THICK(9),LAY


      IF(TH.GT.0.0) GO TO 10
C
C     NO DRAINAGE AND PERCOLATION IF THE HEAD IS ZERO.
C
      DRN=0.0
      PRC=0.0
      RETURN
C
C     COMPUTES THE TWO CORRECTION FACTORS FOR LATERAL DRAINAGE.
C
   10 IF(SLOPE(LAYD).EQ.0.0) GO TO 15
      CF=(SLOPE(LAYD)*XLENG(LAYD)*0.00205*12.0/100.0)+0.510
      CYBAR=(TH*100.0/SLOPE(LAYD)/XLENG(LAYD)/12.0)**0.16
      GO TO 20
   15 CF=0.65
      CYBAR=1.0
   20 IF(CYBAR.GT.(0.65/CF))CYBAR=0.65/CF
C
C     COMPUTES THE DRAINAGE RATE.
C
      DRN=2.0*CF*ELKS*TH*((TH*CYBAR)+
     1      (SLOPE(LAYD)*XLENG(LAYD)*12.0/100.0))/
     2       (XLENG(LAYD)*12.0)**2.
C
C     COMPUTES THE PERCOLATION RATE.
C
      PRC=RCUL(NSEGE)*(TH+STHICK(NSEGE))/STHICK(NSEGE)
C
C     RECOMPUTES THE PERCOLATION RATE WHEN USING
C     A SYNTHETIC MEMBRANE.
C
      IF(LAYER(LAYE).EQ.5)PRC=PRC*FLEAK
```

```
50.            QOUT=DRN+PRC
51.            IF(QOUT.LE.QOUTMX)GO TO 30
52.     C
53.     C     RECOMPUTES THE DRAINAGE AND PERCOLATION RATES WHEN LIMITED
54.     C     BY THE AVAILABLE DRAINABLE WATER(QOUTMX).
55.     C
56.            DRN=DRN*QOUTMX/QOUT
57.            PRC=PRC*QOUTMX/QOUT
58.
59.       30  RETURN
60.           END
```

```
C
C        ************************ LATKS ************************
C
C
C     SUBROUTINE LATKS COMPUTES EFFECTIVE LATERAL
C     HYDRAULIC CONDUCTIVITY.
C
      SUBROUTINE LATKS(TH,NSEGB,NSEGL,ELKS)

      COMMON/BLK7/STHICK(16),UL(16),FCUL(16),WPUL(16),
     1        SWUL(16),RCUL(16)


      ELKS=0.0

      IF(TH.LE.0.0) GO TO 30

      H=TH

      DO 20 J=NSEGB,NSEGL

      K=NSEGL+NSEGB-J

      IF(H.LE.0.0) GO TO 30
      IF(H.GT.STHICK(K)) GO TO 10

      ELKS=ELKS+RCUL(K)*H/TH

      GO TO 30

10    ELKS=ELKS + RCUL(K)*STHICK(K)/TH

      H = H-STHICK(K)

20    CONTINUE

30    RETURN
      END
```

```
C
C      ************************** MCDATA ************************
C
C
C
      SUBROUTINE MCDATA
C
C     THIS SUBROUTINE PREPARES THE MANUAL CLIMATOLOGIC INPUT FILE
C
C
      COMMON/BLK1/KCDATA,KSDATA,KFLAG,IFLAG,KVEG

      DIMENSION ZRAIN(10),KLM(74),VALUE(10),JYEAR(20)
     1  ,RAIN(20,37,10)

      REWIND 11
      WRITE(11,5)KCDATA
    5 FORMAT(I5)
      REWIND 11

      KKOUNT=0
      WRITE(6,10)
   10 FORMAT(1H //1X,66(1H*)/14X,32HUSE ONLY ENGLISH UNITS OF INCHES,
     19H AND DAYS/22X,26HUNLESS OTHERWISE INDICATED//1X,23(1H#),
     2  20HANSWER ALL QUESTIONS,22(1H#)/1X,66(1H*)/1X,
     311X,44HA VALUE **MUST** BE ENTERED FOR EACH COMMAND/
     4  20X,28HEVEN WHEN THE VALUE IS ZERO./1X,66(1H*)//)
   15 WRITE(6,20)
   20 FORMAT(1H //45H 3.1 DO YOU WANT TO ENTER PRECIPITATION DATA/
     1 1X,16HENTER YES OR NO.//)
      CALL ANSWER(IANS)
      IF(IANS.EQ.1) GO TO 170
      WRITE(6,30)
   30 FORMAT(1H //1X,29(1H#),8H NOTICE ,29(1H#)//4X,13HPRECIPITATION,
     148H INPUT WILL ACCEPT **TWENTY** (20) YEARS MAXIMUM/
     220X,28HAND **TWO**(2) YEARS MINIMUM//)
      WRITE(6,40)
   40 FORMAT(1H //1H ,66(1H*)/1H ,66(1H*)//
     110X,42HWHEN PRECIPITATION DATA ARE TO BE ENTERED,/10X,
     243HTEN DAILY VALUES ARE TO BE ENTERED PER LINE/
     310X,32HAND 37 LINES OF VALUES PER YEAR./
     410X,42HIF ALL TEN VALUES ARE ZEROES (0), ONLY ONE/
     510X,24HZERO (0) NEED BE ENTERED,17H BEFORE RETURNING/
     610X,13HTHE CARRIAGE./10X,13HIF A LINE IS ,
     730HPARTIALLY FILLED WITH DATA AND/10X,14HTHE REMAINDER ,
     8 28HIS TO BE FILLED WITH ZEROES,/10X,16HONLY A CARRIAGE ,
     9 19HRETURN IS REQUIRED.//1X,66(1H*)/1X,66(1H*)//)
      REWIND 4
        INEW=0
```

```
      WRITE(6,50)
   50 FORMAT(1H /47H 3.2 DO YOU WANT TO CORRECT OR ADD TO EXISTING ,
     119HPRECIPITATION DATA/1X,16HENTER YES OR NO.//)
      CALL ANSWER(IANS)
      IF(IANS.EQ.0) GO TO 175
      NYEAR=0
      ICOUNT=0
       INEW=1
      DO 60 I=1,10
   60 ZRAIN(I)=0.0
      DO 80 J=1,740
      WRITE(4,70)NYEAR,(ZRAIN(I),I=1,10),ICOUNT
   70 FORMAT(I10,10F5.2,I10)
   80 CONTINUE
      REWIND 4
      WRITE(6,90)
   90 FORMAT(1H /1H ,4H3.3 ,28HYOU ARE ENTERING A COMPLETE ,
     130HNEW SET OF PRECIPITATION DATA.//)
         IKOUNT=1
   95    DO 160 I=IKOUNT,20
      WRITE(6,100)
  100 FORMAT(1H /1H ,4H3.4 ,32HENTER THE YEAR OF PRECIPITATION ,
     119HDATA TO BE ENTERED./1X,
     237HENTER 0 (ZERO) TO END RAINFALL INPUT.//)
      READ(10,110) (KLM(J),J=1,74)
  110 FORMAT(74A1)
      CALL SCAN(NO,VALUE,74,KLM)
      NYEAR=VALUE(1)
      IF(NYEAR.EQ.0)GO TO 164
      IF(I.EQ.1)GO TO 118
       DO 115 M=1,KKOUNT
       KONT=M
       IF(NYEAR.EQ.JYEAR(M))GO TO 360
  115  CONTINUE
  118    WRITE (6,120) NYEAR
  120 FORMAT(1H /1H ,4H3.6 ,29HENTER TEN DAILY PRECIPITATION,
     116H VALUES PER LINE/27H AND 37 LINES PER YEAR FOR ,I4,1H./)
      JYEAR(I)=NYEAR
      KKOUNT=I
      DO 150 K=1,37
      WRITE(6,130) K
  130 FORMAT(1H ,4H3.7 ,11HENTER LINE ,I2,1H.)
      READ(10,110) (KLM(J),J=1,74)
      CALL SCAN(NO,VALUE,74,KLM)
      DO 135 L=1,10
      RAIN(KKOUNT,K,L)=VALUE(L)
  135 CONTINUE
  140 FORMAT(I10,10F5.2,I10)
  150 CONTINUE
  160 CONTINUE
```

```
  164     REWIND 4
          DO 163 I=1,KKOUNT
          DO 161 J=1,37
          WRITE(4,140) JYEAR(I),(RAIN(I,J,K),K=1,10),J
  161 CONTINUE
  163 CONTINUE
          REWIND 4

  165 IF(KKOUNT.GT.0)CALL SORTYR(KKOUNT)

  170 CALL PRECHK(KKOUNT)
          REWIND 4

          GO TO 400
  175 IADD=0
  180 WRITE(6,190)
  190 FORMAT(1H /1H ,4H3.8 ,30HDO YOU WANT TO ADD OR REPLACE ,
     1  20HADDITIONAL YEARS OF /1X,
     1 43HPRECIPITATION VALUES IN THE EXISTING DATA /1X,
     2 16HENTER YES OR NO./)
          CALL ANSWER(IANS)
          IF(IANS.EQ.1.AND.IADD.EQ.1) GO TO 395
          IF(IANS.EQ.1)GO TO 170
          IF(IADD.EQ.1) GO TO 220
          KKOUNT=0
          IADD=1
          DO 210 I=1,20
          DO 205 J=1,37
          READ(4,200,END=215)JYEAR(I),(RAIN(I,J,K),K=1,10)
  200 FORMAT(I10,10F5.2)
  205 CONTINUE
  210 KKOUNT=I
  215 REWIND 4
  220 WRITE(6,230)KKOUNT,(JYEAR(J),J=1,KKOUNT)
  230 FORMAT(1H /5H 3.9 ,14HDATA EXIST FOR,I3,
     1 9H YEARS:  ,5(I4,2H  )/3(31X,5(I4,2H  )/))
  240  IF(KKOUNT.GE.20) GO TO 290
          WRITE(6,100)
          READ(10,110)(KLM(J),J=1,74)
          CALL SCAN(NO,VALUE,74,KLM)
          NYEAR=VALUE(1)
          IF(NYEAR.LE.0) GO TO 395
          DO 250 I=1,KKOUNT
          KONT=I
          IF(NYEAR.EQ.JYEAR(I)) GO TO 360
  250 CONTINUE
          KKOUNT=KKOUNT+1
          WRITE(6,120) NYEAR
          JYEAR(KKOUNT)=NYEAR
          DO 280 K=1,37
```

```
150.          WRITE(6,130) K
151.          READ(10,110)(KLM(J),J=1,74)
152.          CALL SCAN(NO,VALUE,74,KLM)
153.          DO 275 L=1,10
154.          RAIN(KKOUNT,K,L)=VALUE(L)
155.      275 CONTINUE
156.      280 CONTINUE
157.           GO TO 180
158.      290 WRITE(6,300)
159.      300 FORMAT(1H /6H 3.10 ,34HTWENTY YEARS OF PRECIPITATION DATA/1X,
160.         1 26HHAVE ALREADY BEEN ENTERED./24H DO YOU WISH TO REPLACE ,
161.         2 18HANY YEARS OF DATA/1X,16HENTER YES OR NO.//)
162.          CALL ANSWER(IANS)
163.          IF(IANS.EQ.1) GO TO 395
164.          WRITE(6,310)
165.      310 FORMAT(1H /1H ,5H3.11 ,30HENTER THE YEAR TO BE REPLACED./)
166.          READ(10,110) (KLM(I),I=1,74)
167.          CALL SCAN(NO,VALUE,74,KLM)
168.          NOYEAR=VALUE(1)
169.          DO 330 I=1,KKOUNT
170.          KONT=I
171.          IF(NOYEAR.EQ.JYEAR(I)) GO TO 340
172.          IF(I.EQ.20) WRITE(6,320)NOYEAR
173.      320 FORMAT(1H /6H 3.12 , I4,29H IS NOT IN THE EXISTING DATA.//)
174.      330 CONTINUE
175.          GO TO 290
176.      340 WRITE(6,100)
177.          READ(10,110) (KLM(J),J=1,74)
178.          CALL SCAN(NO,VALUE,74,KLM)
179.          NYEAR=VALUE(1)
180.          DO 345 I=1,KKOUNT
181.          IF(NYEAR.EQ.JYEAR(I)) GO TO 360
182.      345 CONTINUE
183.          WRITE(6,120)NYEAR
184.          JYEAR(KONT)=NYEAR
185.          DO 355 L=1,37
186.          WRITE(6,130)L
187.          READ(10,110) (KLM(J),J=1,74)
188.          CALL SCAN(NO,VALUE,74,KLM)
189.          DO 350 K=1,10
190.          RAIN(KONT,L,K)=VALUE(K)
191.      350 CONTINUE
192.      355 CONTINUE
193.
194.          GO TO 290
195.      360 WRITE(6,370) NYEAR
196.      370 FORMAT(1H /1H ,4H3.5 ,I4,28H ALREADY EXISTS IN THE DATA./1X,
197.         1 41HDO YOU WANT TO REPLACE THE EXISTING DATA/1X,
198.         2 16HENTER YES OR NO./)
199.          CALL ANSWER(IANS)
```

```
 IKOUNT=KKOUNT+1
 IF(IANS.EQ.1.AND.INEW.EQ.1)GO TO 95
IF(IANS.EQ.1.AND.KKOUNT.GE.20) GO TO 290
IF(IANS.EQ.1)GO TO 180
WRITE(6,120)NYEAR
DO 380 L=1,37
WRITE(6,130) L
READ(10,110) (KLM(J),J=1,74)
CALL SCAN(NO,VALUE,74,KLM)
DO 375 K=1,10
RAIN(KONT,L,K)=VALUE(K)
375 CONTINUE
380 CONTINUE
 IF(INEW.EQ.1)GO TO 95
IF(KKOUNT.GE.20) GO TO 290
GO TO 180
395 REWIND 4
DO 399 I=1,KKOUNT
DO 397 J=1,37
WRITE(4,140) JYEAR(I),(RAIN(I,J,K),K=1,10),J
397 CONTINUE
399 CONTINUE
REWIND 4
GO TO 165

400 CALL MTRLYR(KKOUNT)

RETURN
END
```

```
C
C      ************************ MSDATA ****************************
C
C     SUBROUTINE MSDATA ACCEPTS THE USER INPUT OF SOIL
C     CHARACTERISTICS AND DESIGN INFORMATION.
C

      SUBROUTINE MSDATA

      COMMON/BLK1/KCDATA,KSDATA,KFLAG,IFLAG,KVEG

      DIMENSION ITITLE(3,40),KLM(74),VALUE(10),THICK(9),PORO(9),
     1 FC(9),WP(9),RC(9),CON(9),LAYER(10)
      WRITE(6,10)
   10 FORMAT(1H /1H ,4H5.1 ,31HDO YOU WANT TO CORRECT OR CHECK/1X,
     1  34HTHE EXISTING DESIGN AND SOIL DATA/1X,
     2  16HENTER YES OR NO.//)
      CALL ANSWER(IANS)
      IF(IANS.EQ.0) GO TO 510

      WRITE(6,20)
   20 FORMAT(1H /46H 5.2 YOU ARE ENTERING A COMPLETE NEW DATA SET.//)
      WRITE(6,30)
   30 FORMAT(1H //1X,66(1H*)/14X,25HUSE ONLY ENGLISH UNITS OF,
     1 16H INCHES AND DAYS/20X,16HUNLESS OTHERWISE,
     2 10H INDICATED//1X,23(1H#),20HANSWER ALL QUESTIONS,
     3 22(1H#)/1X,66(1H*)/12X,
     4 44HA VALUE **MUST** BE ENTERED FOR EACH COMMAND/
     5  20X,28HEVEN WHEN THE VALUE IS ZERO./1X,66(1H*)//)
      WRITE(6,40)
   40 FORMAT(1H //23H ENTER TITLE ON LINE 1,/
     1 45H ENTER LOCATION OF SOLID WASTE SITE ON LINE 2/
     2 34H AND ENTER TODAY'S DATE ON LINE 3.///)
      DO 60 J=1,3
      READ(10,50)(ITITLE(J,I),I=1,40)
   50 FORMAT(80A1)
   60 CONTINUE
      WRITE(6,70)
   70  FORMAT(1H ,/5H 5.3 ,32HFOUR TYPES OF LAYERS MAY BE USED,
     1 15H IN THE DESIGN:/23H VERTICAL PERCOLATION, ,
     2 18HLATERAL DRAINAGE, ,
     3 24HBARRIER SOIL, AND WASTE.//
     4 1X,24HLATERAL DRAINAGE IS NOT ,
     5 44HPERMITTED FROM A VERTICAL PERCOLATION LAYER./1X,
     6 54HBOTH VERTICAL AND LATERAL DRAINAGE IS PERMITTED FROM A,
     7 8H LATERAL/16H DRAINAGE LAYER./22H A BARRIER SOIL LAYER ,
     8 42HSHOULD BE DESIGNED TO INHIBIT PERCOLATION./1X,
     9 39HAN IMPERMEABLE LINER MAY BE USED ON TOP ,
```

```
     1 27H OF ANY BARRIER SOIL LAYER./11H THE WASTE ,
     2 50HLAYER SHOULD BE DESIGNED TO PERMIT RAPID DRAINAGE /1X,
     3 21HFROM THE WASTE LAYER.//)
      WRITE(6,75)
   75  FORMAT(1H /7H RULES://27H THE TOP LAYER CANNOT BE A ,
     1 19HBARRIER SOIL LAYER.)
      WRITE(6,80)
   80  FORMAT(30H A BARRIER SOIL LAYER MAY NOT ,
     1 29HBE PLACED ADJACENT TO ANOTHER /
     2 20H BARRIER SOIL LAYER./20H ONLY A BARRIER SOIL,
     3 47H LAYER OR ANOTHER LATERAL DRAINAGE LAYER MAY BE/
     4 48H PLACED DIRECTLY BELOW A LATERAL DRAINAGE LAYER./
     5 40H YOU MAY USE UP TP 9 LAYERS AND UP TO 3 ,
     6 20HBARRIER SOIL LAYERS.//17H ENTER THE NUMBER,
     7 26H OF LAYERS IN YOUR DESIGN.//)
C
C     INITIALIZES THE DATA FILE VARIABLES.
C
      DO 90 I=1,9
        THICK(I)=0.0
        PORO(I)=0.0
        FC(I)=0.0
        WP(I)=0.0
        LAYER(I)=0
        RC(I)=0.0
        CON(I)=0.0
   90 CONTINUE
      LINER=0
      FLEAK=1.0
      FRUNOF=1.0
      LAYER(10)=0
  100 READ(10,110)(KLM(J),J=1,74)
  110 FORMAT(74A1)
      CALL SCAN(NO,VALUE,74,KLM)
      LAY=VALUE(1)
      IF(LAY.EQ.1) GO TO 130
      IF(LAY.GT.1.AND.LAY.LE.9) GO TO 150
      WRITE(6,120)
  120 FORMAT(1H /1H ,4H5.6 ,27HYOU MAY HAVE 1 TO 9 LAYERS.///)
      GO TO 100
  130 WRITE(6,140)
  140 FORMAT(1H /1H ,4H5.5 ,31HSOIL LAYER 1 IS THE ONLY LAYER./)
      GO TO 170
  150 WRITE(6,160)LAY
  160 FORMAT(1H /1H ,4H5.4 ,33HTHE LAYERS ARE NUMBERED SUCH THAT/
C
C     STARTS LOOP TO ENTER THE SOIL CHARACTERISTICS OF THE LAYERS.
C
     1 30H SOIL LAYER 1 IS THE TOP LAYER/
     2 15H AND SOIL LAYER,I2,21H IS THE BOTTOM LAYER./)
```

```
  170 ILAY=1
      ISAND=0
      WRITE(6,175)
  175 FORMAT(1H /5H 5.7 ,32HIS THE TOP LAYER AN UNVEGETATED ,
     1 21HSAND OR GRAVEL LAYER/17H ENTER YES OR NO./)
      CALL ANSWER(IANS)
      IF(IANS.EQ.0)ISAND=1
  180 WRITE(6,190)ILAY
  190 FORMAT(1H /1H ,4H5.8 ,29HENTER THICKNESS OF SOIL LAYER,I2,
     1 11H IN INCHES.)
      READ(10,110)(KLM(J),J=1,74)
      CALL SCAN(NO,VALUE,74,KLM)
      THICK(ILAY)=VALUE(1)
      IF(THICK(ILAY).GT.0.0) GO TO 210
      WRITE(6,200)
  200 FORMAT(1H ,4H5.9 ,36HTHICKNESS MUST BE GREATER THAN ZERO.)
      GO TO 180
  210 WRITE(6,220)ILAY
  220 FORMAT(1H /1H ,5H5.10 ,32HENTER THE POROSITY OF SOIL LAYER,I2,
     112H IN VOL/VOL./)
      READ(10,110)(KLM(J),J=1,74)
      CALL SCAN(NO,VALUE,74,KLM)
      PORO(ILAY)=VALUE(1)
      WRITE(6,230)ILAY
  230 FORMAT(1H /44H 5.11 ENTER THE FIELD CAPACITY OF SOIL LAYER,
     1I2,12H IN VOL/VOL./)
      READ(10,110)(KLM(J),J=1,74)
      CALL SCAN(NO,VALUE,74,KLM)
      FC(ILAY)=VALUE(1)
      WRITE(6,240)ILAY
  240 FORMAT(1H /43H 5.12 ENTER THE WILTING POINT OF SOIL LAYER,
     1 I2,12H IN VOL/VOL./)
      READ (10,110)(KLM(J),J=1,74)
      CALL SCAN(NO,VALUE,74,KLM)
      WP(ILAY)=VALUE(1)
      WRITE(6,250)ILAY
  250 FORMAT(1H /1H ,5H5.13 ,32HENTER THE HYDRAULIC CONDUCTIVITY,
     1 14H OF SOIL LAYER,I2,14H IN INCHES/HR./)
      READ(10,110)(KLM(J),J=1,74)
      CALL SCAN(NO,VALUE,74,KLM)
      RC(ILAY)=VALUE(1)
      WRITE(6,260) ILAY
  260 FORMAT(1H /1H ,5H5.14 ,21HENTER THE EVAPORATION,
     2 26H COEFFICIENT OF SOIL LAYER,I2/20H IN (MM)/(DAY**0.5)./)
      READ(10,110)(KLM(J),J=1,74)
      CALL SCAN(NO,VALUE,74,KLM)
      CON(ILAY)=VALUE(1)
  270 WRITE(6,280)ILAY
  280 FORMAT(1H /6H 5.15 ,30HENTER THE LAYER TYPE FOR LAYER,I2,1H./)
      IF(ILAY.EQ.1)WRITE(6,290)
```

```
150.        290 FORMAT(1H /47H 5.16 ENTER 1 FOR A VERTICAL PERCOLATION LAYER,
151.           1 /12X,31H2 FOR A LATERAL DRAINAGE LAYER,/
152.           2 12X,27H3 FOR A BARRIER SOIL LAYER,/
153.           3 12X,23H4 FOR A WASTE LAYER AND/
154.           4 12X,31H5 FOR A BARRIER SOIL LAYER WITH/
155.           5 14X,21HAN IMPERMEABLE LINER./)
156.            READ(10,110)(KLM(J),J=1,74)
157.            CALL SCAN(NO,VALUE,74,KLM)
158.            LAYER(ILAY)=VALUE(1)
159.            IF(LAYER(ILAY).LT.1.OR.LAYER(ILAY).GT.5)WRITE(6,295)LAYER(ILAY)
160.       295  FORMAT(1H /5H 5.17,I5,27H   INVALID VALUE--TRY AGAIN/)
161.            IF(LAYER(ILAY).LT.1.OR.LAYER(ILAY).GT.5) GO TO 270
162.             IF(ILAY.EQ.1)GO TO 302
163.            ILAYM1=ILAY-1
164.            IF(LAYER(ILAYM1).EQ.3.OR.LAYER(ILAYM1).EQ.5)GO TO 320
165.            IF(LAYER(ILAY).EQ.2) GO TO 330
166.            IF(LAYER(ILAY).EQ.3) GO TO 330
167.            IF(LAYER(ILAY).EQ.5) GO TO 310
168.            IF(LAYER(ILAYM1).NE.2)GO TO 330
169.            WRITE(6,300)
170.        300 FORMAT(1H /1H ,5H5.19 ,35HEITHER A LATERAL DRAINAGE LAYER OR /
171.           1 1X,33HA BARRIER SOIL LAYER MUST FOLLOW /1X,
172.           210HA LATERAL ,27HDRAINAGE LAYER.--TRY AGAIN.//)
173.            GO TO 270
174.       302  IF(LAYER(1).NE.3.AND.LAYER(1).NE.5)GO TO 330
175.            WRITE(6,305)
176.       305  FORMAT(1H /6H 5.18 ,22HTHE TOP LAYER MAY NOT ,
177.           1 24HBE A BARRIER SOIL LAYER./)
178.            GO TO 270
179.       320  IF(LAYER(ILAY).NE.3.AND.LAYER(ILAY).NE.5)GO TO 330
180.            WRITE(6,325)
181.       325  FORMAT(1H /6H 5.20 ,21HA BARRIER SOIL LAYER ,
182.           1 33HMAY NOT BE PLACED DIRECTLY BELOW /
183.           2 28H ANOTHER BARRIER SOIL LAYER./)
184.            GO TO 270
185.
186.      C
187.      C     SOIL CHARACTERISTICS INPUT IS COMPLETED. CHECKS TO SEE IF
188.      C     THE BOTTOM LAYER IS A BARRIER SOIL LAYER.
189.      C
190.        310 LINER=LINER+1
191.        330 ILAY=ILAY+1
192.            IF(ILAY.LE.LAY) GO TO 180
193.            ILAYM1=ILAY-1
194.            IF(LAYER(ILAYM1).NE.2) GO TO 370
195.            IF(ILAYM1.GE.9) GO TO 350
196.            WRITE(6,340)
197.        340 FORMAT(1H /1H ,5H5.21 ,30HA BARRIER LAYER SHOULD BE USED,
198.           1 25H BELOW THE BOTTOM LATERAL/16H DRAINAGE LAYER.//1X,
199.           2 21HDO YOU WANT TO ENTER ,
```

```
     3 25HDATA FOR A BARRIER LAYER/17H ENTER YES OR NO.//
     4 1X,40HIF NO IS ENTERED, THE MODEL ASSUMES THAT/1X,
     5 54HLATERAL DRAINAGE DOES NOT OCCUR FROM THE BOTTOM LAYER.//)

      CALL ANSWER(IANS)
      IF(IANS.EQ.1) GO TO 370
      LAY=LAY+1
      GO TO 180
  350 WRITE(6,360)
  360 FORMAT(1H /1H ,4H5.22,33H A BARRIER LAYER SHOULD HAVE BEEN,
     1  11H SPECIFIED./1X,
     155HTHE MODEL ASSUMES THAT LATERAL DRAINAGE DOES NOT OCCUR /
     1 1X,22HFROM THE BOTTOM LAYER.//)

  370 IF(LINER.EQ.0) GO TO 410
  380 WRITE(6,390)
  390 FORMAT(1H /46H 5.23 WHAT FRACTION OF THE AREA DRAINS THROUGH,
     1 22H LEAKS IN THE MEMBRANE/1X,
     2 40HOR WHAT FRACTION OF THE DAILY POTENTIAL ,
     3 23HPERCOLATION THROUGH THE/14H BARRIER SOIL ,
     4 30HLAYER OCCURS ON THE GIVEN DAY/1X,
     5 22HENTER BETWEEN 0 AND 1.//)

      READ(10,110)(KLM(J),J=1,74)
      CALL SCAN(NO,VALUE,74,KLM)
      FLEAK=VALUE(1)

      IF(FLEAK.GE.0.0.AND.FLEAK.LE.1.0) GO TO 410
      WRITE(6,400)
  400 FORMAT(1H /1H ,5H5.24 ,31HINAPPROPRIATE VALUE--TRY AGAIN.//)
C
C     OPEN IS CALLED WHEN THE TOP LAYER IS A WASTE LAYER.
C
      GO TO 380
  410 CONTINUE
      IF(LAYER(1).EQ.4) CALL OPEN(CN2,FRUNOF)
      IF(LAYER(1).EQ.4) GO TO 440
  420 WRITE(6,430)
  430 FORMAT(1H /6H 5.25 ,37HENTER THE SCS RUNOFF CURVE NUMBER FOR,
     1 27H THE DESIGN VEGETATIVE SOIL/1X,20HAND VEGETATIVE COVER,
     2 40H UNDER ANTECEDENT MOISTURE CONDITION II./
     3 21H (BETWEEN 15 AND 100)/)
      READ(10,110)(KLM(J),J=1,74)
C
C     WRITES THE ENTERED DATA ON DATA FILE TAPE 5
C     WHICH LINES ARE NUMBERED.
C
      CALL SCAN(NO,VALUE,74,KLM)
      CN2=VALUE(1)
  440 JCOUNT=4
```

```
      REWIND 5
      DO 445 J=1,3
      WRITE(5,50) (ITITLE(J,I),I=1,40)
  445 CONTINUE
      WRITE(5,450)LAY,LINER,FLEAK,FRUNOF,CN2,JCOUNT
  450 FORMAT(2I2,3F12.6,I7)
      JCOUNT=5
      WRITE(5,460)(THICK(J),J=1,9),JCOUNT
  460 FORMAT(9F7.2,I7)
      JCOUNT=6
      WRITE(5,470)(PORO(J),J=1,9),JCOUNT
  470 FORMAT(9F7.4,I7)
      JCOUNT=7
      WRITE(5,470)(FC(J),J=1,9),JCOUNT
      JCOUNT=8
      WRITE(5,470)(WP(J),J=1,9),JCOUNT
      JCOUNT=9
      WRITE(5,480)(CON(J),J=1,9),JCOUNT
  480 FORMAT(9F7.3,I7)
      JCOUNT=10
      WRITE(5,490)(RC(J),J=1,5),JCOUNT
  490 FORMAT(5F13.8,I7)
      JCOUNT=11
C
C     SITE IS CALLED TO SECURE DESIGN DATA.
C
      WRITE(5,500)(RC(J),J=6,9),JCOUNT
C
C     SDCHK IS CALLED TO CHECK AND CORRECT
C     SOIL CHARACTERISTICS AND DESIGN DATA.
C
  500 FORMAT(4F13.8,I7)
      CALL SITE(LAYER,LAY,KVEG,ISAND)
  510 CALL SDCHK
      RETURN
      END
```

```
C
C      ************************ MTRLYR ************************
C
C
C     SUBROUTINE MTRLYR ACCEPTS USER INPUT OF CLIMATOLOGIC
C     DATA OTHER THAN PRECIPITATION.
C
      SUBROUTINE MTRLYR(KKOUNT)
      COMMON/BLK1/KCDATA,KSDATA,KFLAG,IFLAG,KVEG

      DIMENSION KLM(74),VALUE(10),TEMP(12),RADI(12),
     1 LDAY13(13),XLAI13(13),JYEAR(20)
      REWIND 4
      DO 3 I=1,KKOUNT
      READ(4,5)JYEAR(I)
    5 FORMAT(I10,36(/))
    3 CONTINUE
      REWIND 4
       WRITE(6,8)
    8  FORMAT(1H /36H 8.1 DO YOU WANT TO ENTER OR CORRECT/
     1 25H OTHER CLIMATOLOGIC DATA/17H ENTER YES OR NO./)
        CALL ANSWER(IANS)
        IF(IANS.EQ.1)GO TO 740
C
C     ****** TEMPERATURES ******
C
      WRITE(6,10)
   10 FORMAT(1H /43H 8.2 DO YOU WANT TO ENTER TEMPERATURE DATA/
     1 1X,16HENTER YES OR NO./)
      CALL ANSWER(IANS)
      IF(IANS.EQ.1) GO TO 210
      REWIND 7
      WRITE(6,20)
   20 FORMAT(1H /44H 8.3 DO YOU WANT TO ENTER A DIFFERENT SET OF/
     2 1X,35HMONTHLY TEMPERATURES FOR EACH YEAR//1X,
     3 16HENTER YES OR NO.//1X,
     4 43H(IF NO IS ENTERED, THE PROGRAM WILL USE THE/1X,
     5 41HSAME SET OF MONTHLY TEMPERATURES FOR EACH/1X,
     6 20HYEAR OF SIMULATION.)/)
      CALL ANSWER(IANS)
      IF(IANS.EQ.1) GO TO 160
C
C     **** MULTIPLE SETS OF TEMPERATURES ****
C
      REWIND 7
      DO 150 I=1,KKOUNT
      WRITE(6,30)JYEAR(I)
   30 FORMAT(1H ,4H8.4 ,31HENTER MONTHLY TEMPERATURES FOR ,I4,1H.)
      IF(I.EQ.1) GO TO 50
```

```
      WRITE(6,40)
   40 FORMAT(1H /42H 8.5 DO YOU WANT TO USE THE SAME VALUES AS,
     1 19H THE PREVIOUS YEAR/1X,16HENTER YES OR NO./)
      CALL ANSWER(IANS)
      IF(IANS.EQ.0) GO TO 130
   50 WRITE (6,60) JYEAR(I)
   60 FORMAT(1H /37H 8.6 ENTER MONTHLY VALUES FOR JANUARY,
     1 8H THROUGH,6H JUNE ,I4,14H IN DEGREES F./1X,
     2 36HENTER ALL 6 VALUES IN THE SAME LINE./)
      READ (10,90)(KLM(J),J=1,74)
      CALL SCAN(NO,VALUE,74,KLM)
      DO 70 M=1,6
   70 TEMP(M)=VALUE(M)
      WRITE(6,80) JYEAR(I)
   80 FORMAT(1H /42H 8.7 ENTER MONTHLY VALUES FOR JULY THROUGH,
     1 10H DECEMBER ,I4,14H IN DEGREES F./1X,
     2 36HENTER ALL 6 VALUES IN THE SAME LINE./)
      READ(10,90)(KLM(J),J=1,74)
   90 FORMAT(74A1)
      CALL SCAN(NO,VALUE,74,KLM)
      DO 100 M=7,12
      M1=M-6
  100 TEMP(M)=VALUE(M1)
      WRITE(6,110)TEMP(1),TEMP(7),TEMP(2),TEMP(8),TEMP(3),TEMP(9),
     1 TEMP(4),TEMP(10),TEMP(5),TEMP(11),TEMP(6),TEMP(12)
  110 FORMAT(1H /44H 8.8 THESE ARE THE INPUT TEMPERATURE VALUES./
     1 10X,9HJAN.-JUNE,7X,9HJULY-DEC./
     2 6(11X,F6.1,9X,F6.1/))
      WRITE(6,120)
  120 FORMAT(1H /4H 8.9,28H DO YOU WANT TO CHANGE THEM/1X,
     1 16HENTER YES OR NO./)
      CALL ANSWER(IANS)
      IF(IANS.EQ.0) GO TO 50
  130 WRITE(7,140) JYEAR(I),(TEMP(M),M=1,12)
  140 FORMAT(I5,12F6.1)
  150 CONTINUE
      REWIND 7
      GO TO 210
C
C     ****** ONE SET OF TEMPERATURES ******
C
  160 WRITE(6,170)
  170 FORMAT(1H /47H 8.10 ENTER THE MONTHLY TEMPERATURES IN DEGREES,
     1 3H F./40H TO BE USED FOR ALL YEARS OF SIMULATION.//1X,
     2 38HENTER VALUES FOR JANUARY THROUGH JUNE./
     3 37H ENTER ALL 6 VALUES IN THE SAME LINE./)
      READ(10,90)(KLM(J),J=1,74)
      CALL SCAN(NO,VALUE,74,KLM)
      DO 180 M=1,6
  180 TEMP(M)=VALUE(M)
```

```
      WRITE(6,190)
  190 FORMAT(1H /35H 8.11 ENTER MONTHLY VALUES FOR JULY,
     1  8H THROUGH,23H DECEMBER IN DEGREES F./
     2 37H ENTER ALL 6 VALUES IN THE SAME LINE./)
      READ(10,90)(KLM(J),J=1,74)
      CALL SCAN(NO,VALUE,74,KLM)
      DO 200 M=7,12
      M1=M-6
  200 TEMP(M)=VALUE(M1)
      WRITE(6,110)TEMP(1),TEMP(7),TEMP(2),TEMP(8),TEMP(3),TEMP(9),
     1 TEMP(4),TEMP(10),TEMP(5),TEMP(11),TEMP(6),TEMP(12)
      WRITE(6,120)
      CALL ANSWER(IANS)
      IF(IANS.EQ.0) GO TO 160
      LYEAR=0
      REWIND 7
      WRITE(7,140)LYEAR,(TEMP(M),M=1,12)
       REWIND 7
C
C     ****** SOLAR RADIATION ******
C
 210  WRITE(6,220)
  220 FORMAT(1H /42H 8.12 DO YOU WANT TO ENTER SOLAR RADIATION,
     1 6H DATA/1X,16HENTER YES OR NO./)
      CALL ANSWER(IANS)
      IF(IANS.EQ.1) GO TO 675
      WRITE(6,230)
  230 FORMAT(1H /46H 8.13 DO YOU WANT TO ENTER A DIFFERENT SET OF /
     1 1X,45HMONTHLY SOLAR RADIATION VALUES FOR EACH YEAR/1X,
     2 16HENTER YES OR NO./)
      REWIND 13
      CALL ANSWER(IANS)
      IF(IANS.EQ.1) GO TO 330
C
C     ****** MULTIPLE SETS OF SOLAR RADIATION ******
C
      DO 320 I=1,KKOUNT
      WRITE(6,240) JYEAR(I)
  240 FORMAT(1H /36H 8.14 ENTER MONTHLY SOLAR RADIATION ,
     1  11H VALUES FOR,I4,1H.)
      IF(I.EQ.1) GO TO 250
      WRITE(6,40)
      CALL ANSWER(IANS)
      IF(IANS.EQ.0) GO TO 310
  250 WRITE(6,260) JYEAR(I)
  260 FORMAT(1H /46H 8.15 ENTER MONTHLY SOLAR RADIATION VALUES FOR/
     1 1X,21HJANUARY THROUGH JUNE ,I4,17H IN LANGLEYS/DAY./1X,
     2 36HENTER ALL 6 VALUES IN THE SAME LINE./)
      READ(10,90)(KLM(J),J=1,74)
      CALL SCAN(NO,VALUE,74,KLM)
```

```
      DO 270 M=1,6
  270 RADI(M)=VALUE(M)
      WRITE(6,280) JYEAR(I)
  280 FORMAT(1H /46H 8.16 ENTER MONTHLY SOLAR RADIATION VALUES FOR/
     1 1X,22HJULY THROUGH DECEMBER ,I4,17H IN LANGLEYS/DAY./1X,
     2 36HENTER ALL 6 VALUES IN THE SAME LINE./)
      READ(10,90)(KLM(J),J=1,74)
      CALL SCAN(NO,VALUE,74,KLM)
      DO 290 M=7,12
      M1=M-6
  290 RADI(M)=VALUE(M1)
      WRITE(6,300)RADI(1),RADI(7),RADI(2),RADI(8),RADI(3),RADI(9),
     1RADI(4),RADI(10),RADI(5),RADI(11),RADI(6),RADI(12)
  300 FORMAT(1H /41H 8.17 THESE ARE THE INPUT SOLAR RADIATION,
     1 8H VALUES./10X,9HJAN.-JUNE,7X,9HJULY-DEC./
     2 6(11X,F6.1,10X,F6.1/))
      WRITE(6,120)
      CALL ANSWER(IANS)
      IF(IANS.EQ.0) GO TO 250
  310 WRITE(13,140) JYEAR(I),(RADI(M),M=1,12)
  320 CONTINUE
      REWIND 13
      GO TO 675
C
C     ****** ONE SET OF SOLAR RADIATION ******
C
  330 WRITE(6,340)
  340 FORMAT(1H /46H 8.18 ENTER THE MONTHLY SOLAR RADIATION VALUES,
     116H IN LANGLEYS/DAY/35H TO BE USED FOR ALL YEARS OF SIMULA,
     2 5HTION./39H ENTER VALUES FOR JANUARY THROUGH JUNE./1X,
     3 36HENTER ALL 6 VALUES IN THE SAME LINE./)
      READ(10,90)(KLM(J),J=1,74)
      CALL SCAN(NO,VALUE,74,KLM)


      DO 350 M=1,6
  350 RADI(M)=VALUE(M)
      WRITE(6,360)
  360 FORMAT(1H /46H 8.19 ENTER MONTHLY SOLAR RADIATION VALUES IN ,
     1 /40H LANGLEYS/DAY FOR JULY THROUGH DECEMBER./1X,
     2 36HENTER ALL 6 VALUES IN THE SAME LINE./)
      READ(10,90)(KLM(J),J=1,74)
      CALL SCAN(NO,VALUE,74,KLM)
      DO 370 M=7,12
      M1=M-6
  370 RADI(M)=VALUE(M1)
      WRITE(6,300)RADI(1),RADI(7),RADI(2),RADI(8),RADI(3),RADI(9),
     1 RADI(4),RADI(10),RADI(5),RADI(11),RADI(6),RADI(12)
      WRITE(6,120)
      CALL ANSWER(IANS)
```

```
      IF(IANS.EQ.0) GO TO 330
      LYEAR=0
      WRITE(13,140)LYEAR,(RADI(M),M=1,12)
      REWIND 13
C
C     ****** EVAPORATIVE ZONE DEPTH ******
C     ****** ONLY ONE VALUE CAN BE SPECIFIED ******
C
  675 WRITE(6,680)
  680 FORMAT(1H /1H ,5H8.20 ,32HDO YOU WANT TO ENTER EVAPORATIVE,
     1  13H ZONE DEPTHS/1X,16HENTER YES OR NO./)
      CALL ANSWER(IANS)
      IF(IANS.EQ.1) GO TO 380

  690 WRITE(6,700)
  700 FORMAT(1H /1H ,5H8.21 ,33HENTER THE EVAPORATIVE ZONE DEPTH ,
     1  9HIN INCHES/40H TO BE USED FOR ALL YEARS OF SIMULATION./)

      WRITE(6,710)
  710 FORMAT(/1H ,24HCONSERVATIVE VALUES ARE:/
     1  10X,20H4 IN. FOR BAREGROUND/9X,
     2  21H10 IN. FOR FAIR GRASS/
     3  9X,26H18 IN. FOR EXCELLENT GRASS/)

      READ(10,90)(KLM(J),J=1,74)
      CALL SCAN(NO,VALUE,74,KLM)
      RDEPTH=VALUE(1)

      WRITE(6,720)RDEPTH
  720 FORMAT(1H /1H ,5H8.22 ,4HTHE ,
     1  25HEVAPORATIVE ZONE DEPTH IS,F7.2,1H./1X,
     2  43HDO YOU WANT TO CHANGE IT  ENTER YES OR NO./)

      CALL ANSWER(IANS)
      IF(IANS.EQ.0) GO TO 690
      REWIND 16
      WRITE(16,730)RDEPTH
  730 FORMAT(F8.2)
      REWIND 16
C
C     ****** WINTER COVER FACTORS ******
  380 WRITE(6,390)
  390 FORMAT(1H /48H 8.23 DO YOU WANT TO ENTER WINTER COVER FACTORS/
     1 1X,16HENTER YES OR NO./)
      CALL ANSWER(IANS)
      IF(IANS.EQ.1) GO TO 480
      REWIND 15
      WRITE(6,400)
  400 FORMAT(1H /1H ,5H8.24 ,32HDO YOU WANT TO ENTER A DIFFERENT,
     1 13H WINTER COVER/22H FACTOR FOR EACH YEAR/
```

```
     2 1X,16HENTER YES OR NO./)
      CALL ANSWER(IANS)
      IF(IANS.EQ.1) GO TO 460
C
C     ****** MULTIPLE WINTER COVER FACTORS ******
C
      DO 450 I=1,KKOUNT
 410  WRITE(6,420)JYEAR(I)
 420  FORMAT(1H /39H 8.25 ENTER THE WINTER COVER FACTOR FOR,
     1 I5,21H (BETWEEN 0 AND 1.8).)
      READ(10,90)(KLM(J),J=1,74)
      CALL SCAN(NO,VALUE,74,KLM)
      GR=VALUE(1)
      WRITE(6,430)GR
 430  FORMAT(1H /40H 8.26 THE WINTER COVER FACTOR ENTERED IS,
     1 F5.2,1H./
     2 26H DO YOU WANT TO CHANGE IT,3X,16HENTER YES OR NO./)
      CALL ANSWER(IANS)
      IF(IANS.EQ.0) GO TO 410
      WRITE(15,440) JYEAR(I), GR
 440  FORMAT(I5,F8.2)
 450  CONTINUE
      GO TO 480
C
C     ****** ONE WINTER COVER FACTOR ******
C
 460  WRITE(6,470)
C
 470  FORMAT(1H /46H 8.27 ENTER THE WINTER COVER FACTOR TO BE USED/
     1 29H FOR ALL YEARS OF SIMULATION./)
      READ(10,90)(KLM(J),J=1,74)
      CALL SCAN(NO,VALUE,74,KLM)
      GR=VALUE(1)
      WRITE(6,430)GR
      CALL ANSWER(IANS)
      IF(IANS.EQ.0) GO TO 460
      LYEAR=0
      WRITE(15,440) LYEAR,GR
      REWIND 15
C     ****** LEAF AREA INDICES ******
C
 480  WRITE(6,490)
 490  FORMAT(1H /48H 8.28 DO YOU WANT TO ENTER LEAF AREA INDEX DATA/
     1 1X,16HENTER YES OR NO./)
      CALL ANSWER(IANS)
      IF(IANS.EQ.1) GO TO 740
      REWIND 14
      WRITE(6,500)
 500  FORMAT(1H /42H 8.29 13 LEAF AREA INDICES MUST BE ENTERED,
     1  7H FOR A /1X,
```

```
     1 19HYEAR OF SIMULATION./35H EACH INDEX IS COMPOSED OF THE DATE,
     2 19H OF THE MEASUREMENT/31H AND THE LEAF AREA MEASUREMENT./1X,
     3 54H**REMEMBER TO START WITH DAY 1 AND END WITH DAY 366.**)
      WRITE(6,510)
  510 FORMAT(1H /41H DO YOU WANT TO ENTER A DIFFERENT SET OF /1X,
     1 32HLEAF AREA INDICES FOR EACH YEAR/1X,
     2 16HENTER YES OR NO./)
      CALL ANSWER(IANS)
      IF(IANS.EQ.1) GO TO 630
C
C     ****** MULTIPLE SETS OF LEAF AREA INDICES ******
C
      DO 620 I=1,KKOUNT
      WRITE(6,520) JYEAR(I)
  520 FORMAT(1H /1H ,5H8.30 ,28HENTER LEAF AREA INDICES FOR ,I4,1H./)
      IF(I.EQ.1) GO TO 530
      WRITE(6,40)
      CALL ANSWER(IANS)
      IF(IANS.EQ.0) GO TO 590
  530 DO 550 K=1,13
      WRITE(6,540) K
  540 FORMAT(48H 8.31 ENTER TWO VALUES PER LINE--THE JULIAN DATE/
     1 30H AND THE LEAF AREA MEASUREMENT,11H FOR INDEX ,I2,1H./)
      READ(10,90)(KLM(J),J=1,74)
      CALL SCAN(NO,VALUE,74,KLM)
      LDAY13(K)=VALUE(1)
      XLAI13(K)=VALUE(2)
  550 CONTINUE
      WRITE(6,560) JYEAR(I)
  560 FORMAT(1H /46H 8.32 THESE ARE THE INPUT DATES AND LAI VALUES,
     1 5H FOR ,I4,1H./15X,4HDATE,10X,3HLAI)
      DO 580 K=1,13
      WRITE(6,570)LDAY13(K),XLAI13(K)
  570 FORMAT(10X,I8,7X,F8.2)
  580 CONTINUE
      WRITE(6,120)
      CALL ANSWER(IANS)
      IF(IANS.EQ.0) GO TO 530
  590 DO 610 K=1,13
      WRITE(14,600) JYEAR(I),LDAY13(K),XLAI13(K)
  600 FORMAT(I5,I8,F8.2)
  610 CONTINUE

      WRITE(14,615)KVEG
  615 FORMAT(I3)

  620 CONTINUE
      REWIND 14
      GO TO 740
C
```

```
C     ****** ONE SET OF LEAF AREA INDICES ******
C
  630 WRITE(6,640)
  640 FORMAT(1H /45H 8.33 ENTER THE LEAF AREA INDICES TO BE USED /
     1 1X,28HFOR ALL YEARS OF SIMULATION.//)
      DO 650 K=1,13
      WRITE(6,540)K
      READ(10,90)(KLM(J),J=1,74)
      CALL SCAN(NO,VALUE,74,KLM)
      LDAY13(K)=VALUE(1)
      XLAI13(K)=VALUE(2)
  650 CONTINUE
      WRITE(6,560) JYEAR(1)
      DO 660 K=1,13
      WRITE(6,570)LDAY13(K),XLAI13(K)
  660 CONTINUE
      WRITE(6,120)
      CALL ANSWER(IANS)
      IF(IANS.EQ.0) GO TO 630
      LYEAR=0
      DO 670 K=1,13
      WRITE(14,600) LYEAR, LDAY13(K), XLAI13(K)
  670 CONTINUE

      WRITE(14,615)KVEG
      REWIND 14

  740 RETURN
      END
```

```
C
C      ******************* OPEN *************************
C
C
C     SUBROUTINE OPEN ACCEPTS INPUT DESCRIBING THE
C     RUNOFF CONDITIONS FOR AN OPEN LANDFILL.
C
      SUBROUTINE OPEN(CN2,FRUNOF)
      DIMENSION KLM(74),VALUE(10)

      WRITE(6,10)
   10 FORMAT(1H /5H 7.1 ,38HENTER THE SCS RUNOFF CURVE NUMBER FOR ,
     1 16HTHE SOIL TEXTURE/1X,
     2 31HAND AVERAGE MOISTURE CONDITION ,
     3 23HOF THE TOP WASTE LAYER./
     4 21H (BETWEEN 15 AND 100)/)

      READ(10,20)(KLM(J),J=1,74)
   20 FORMAT(74A1)
      CALL SCAN(NO,VALUE,74,KLM)
      CN2=VALUE(1)

      WRITE(6,30)
   30 FORMAT(1H /5H 7.2 ,37HWHAT FRACTION OF THE DAILY POTENTIAL ,
     1 22HRUNOFF DRAINS FROM THE/8H SURFACE,1X,
     2 21HOF THE WASTE LAYER  /1X,
     3 22HENTER BETWEEN 0 AND 1.//)
      READ(10,20)(KLM(J),J=1,74)
      CALL SCAN(NO,VALUE,74,KLM)
      FRUNOF=VALUE(1)

      RETURN
      END
```

```
C      ******************** OUTAVG ********************
       SUBROUTINE OUTAVG(LMYR,IUNIT,IUNITT)
C
C    SUBROUTINE OUTAVG COMPUTES AND PRINTS THE AVERAGED
C    RESULTS FOR THE SIMULATION.
C
       COMMON/BLK5/TAREA,LINER,FLEAK,FRUNOF,CN2
       COMMON/BLK12/PRC1M(240),PRC2M(240),PRC3M(240),
     1  DRN1M(240),DRN2M(240),DRN3M(240),RUNM(240),
     2   PREM(240),ETM(240)
       COMMON/BLK13/PRC1A(20),PRC2A(20),PRC3A(20),
     1   DRN1A(20),DRN2A(20),DRN3A(20),RUNA(20),PREA(20),
     2   ETA(20),JYEAR(20),BAL(20),OSWULE,PSWULE
       DIMENSION APRC1M(12),APRC2M(12),APRC3M(12),ADRN1M(12),
     1  ADRN2M(12),ADRN3M(12),ARUNM(12),APREM(12),AETM(12)
C
C    INITIALIZES AVERAGED  MONTHLY VARIABLES.
C
       DO 10 M=1,12
       APRC1M(M)=0.0
       APRC2M(M)=0.0
       APRC3M(M)=0.0
       ADRN1M(M)=0.0
       ADRN2M(M)=0.0
       ADRN3M(M)=0.0
       ARUNM(M)=0.0
       APREM(M)=0.0
       AETM(M)=0.0
    10 CONTINUE
       XYR=FLOAT(LMYR)
       DO 30 M=1,12
       DO 20 I=1,LMYR
C
C    COMPUTES AVERAGED MONTHLY VARIABLES IN INCHES.
C
       K=12*I+M-12
       APRC1M(M)=APRC1M(M)+PRC1M(K)/XYR
       APRC2M(M)=APRC2M(M)+PRC2M(K)/XYR
       APRC3M(M)=APRC3M(M)+PRC3M(K)/XYR
       ADRN1M(M)=ADRN1M(M)+DRN1M(K)/XYR
       ADRN2M(M)=ADRN2M(M)+DRN2M(K)/XYR
       ADRN3M(M)=ADRN3M(M)+DRN3M(K)/XYR
       ARUNM(M)=ARUNM(M)+RUNM(K)/XYR
       APREM(M)=APREM(M)+PREM(K)/XYR
       AETM(M)=AETM(M)+ETM(K)/XYR
20     CONTINUE
30     CONTINUE
C
C    INITIALIZES AVERAGED ANNUAL VARIABLES.
```

```
C
      APRC1A=0.0
      APRC2A=0.0
      APRC3A=0.0
      ARUNA=0.0
      APREA=0.0
      AETA=0.0
      ADRN1A=0.0
      ADRN2A=0.0
      ADRN3A=0.0
C
C     COMPUTES AVERAGED ANNUAL VARIABLES IN INCHES.
C
      DO 40 I=1,LMYR
      APRC1A=APRC1A+PRC1A(I)/XYR
      APRC2A=APRC2A+PRC2A(I)/XYR
      APRC3A=APRC3A+PRC3A(I)/XYR
      ADRN1A=ADRN1A+DRN1A(I)/XYR
      ADRN2A=ADRN2A+DRN2A(I)/XYR
      ADRN3A=ADRN3A+DRN3A(I)/XYR
      ARUNA=ARUNA+RUNA(I)/XYR
      APREA=APREA+PREA(I)/XYR
      AETA=AETA+ETA(I)/XYR
40    CONTINUE
C
C     COMPUTES AVERAGED ANNUAL VARIABLES IN CU. FT. AND IN
C     PERCENT OF AVERAGE ANNUAL PRECIPITATION.
C
      TAPREA=TAREA*APREA/12.0
      FAPREA=100.0
      TARUNA=TAREA*ARUNA/12.0
      FARUNA=TARUNA*100.0/TAPREA
      TAETA=TAREA*AETA/12.0
      FAETA=TAETA*100.0/TAPREA
      TAPC3A=APRC3A*TAREA/12.0
      FAPC3A=TAPC3A*100.0/TAPREA
      TAPC2A=APRC2A*TAREA/12.0
      FAPC2A=TAPC2A*100.0/TAPREA
      TAPC1A=APRC1A*TAREA/12.0
      FAPC1A=TAPC1A*100.0/TAPREA
      TADN3A=ADRN3A*TAREA/12.0
      FADN3A=TADN3A*100.0/TAPREA
      TADN2A=ADRN2A*TAREA/12.0
      FADN2A=TADN2A*100.0/TAPREA
      TADN1A=ADRN1A*TAREA/12.0
      FADN1A=TADN1A*100.0/TAPREA
C
C     PRINTS HEADING FOR AVERAGE MONTHLY RESULTS AND PRINTS
C     AVERAGED MONTHLY PRECIPITATION, RUNOFF AND EVAPOTRANSPIRATION.
C
```

```
      WRITE(6,45)
   45 FORMAT(1H ,6(/),1H ,70(1H*)/)
      WRITE(6,50) JYEAR(1),JYEAR(LMYR)
50    FORMAT(1H ///4X,26HAVERAGE MONTHLY TOTALS FOR
     1   I5,8H THROUGH,I5/)
      WRITE(6,120)
120   FORMAT(1H ,24X,24HJAN/JUL FEB/AUG MAR/SEP ,
     1  23HAPR/OCT MAY/NOV JUN/DEC/24X,6(8H -------)/)
      WRITE(6,130) (APREM(J),J=1,12)
130   FORMAT(1H /23H PRECIPITATION (INCHES),
     1    6(3X,F5.2)/23X,6(3X,F5.2)/)
      WRITE(6,140) (ARUNM(J),J=1,12)
140   FORMAT(1H /16H RUNOFF (INCHES),7X,
     1   6(2X,F6.3)/23X,6(2X,F6.3)/)
      WRITE(6,150) (AETM(J),J=1,12)
  150 FORMAT(1H /19H EVAPOTRANSPIRATION,4X,6(2X,F6.3)/
     1 6X,8H(INCHES),9X,6(2X,F6.3)/)
        IF(IUNIT.EQ.3) GO TO 280
        IF(IUNIT.EQ.2) GO TO 210
        IF(IUNITT.EQ.0) GO TO 180
C
C    ONE SUBPROFILE, COVER.
C
        WRITE(6,160) (APRC3M(J),J=1,12)
160   FORMAT(1H /22H PERCOLATION FROM BASE,2X,6F8.4/1X,
     1  17HOF COVER (INCHES),6X,6F8.4/)
        WRITE(6,170) (ADRN3M(J),J=1,12)
170   FORMAT(1H /22H DRAINAGE FROM BASE OF,1X,6F8.3/1X,
     1 14HCOVER (INCHES),8X,6F8.3/)
        GO TO 340
C
C    ONE SUBPROFILE, NO COVER.
C
180   WRITE(6,230) (APRC3M(J),J=1,12)
        WRITE(6,250) (ADRN3M(J),J=1,12)
        GO TO 340
210   IF(IUNITT.GT.0) GO TO 260
C
C    TWO SUBPROFILES, NO COVER.
C
        WRITE(6,220) (APRC3M(J),J=1,12)
220   FORMAT(1H /21H PERCOLATION FROM TOP,3X,6F8.4/1X,
     1  16HBARRIER (INCHES),7X,6F8.4/)
        WRITE(6,230) (APRC2M(J),J=1,12)
230   FORMAT(1H /22H PERCOLATION FROM BASE,2X,6F8.4/1X,
     1 20HOF LANDFILL (INCHES),3X,6F8.4/)
        WRITE(6,240) (ADRN3M(J),J=1,12)
  240  FORMAT(1H /18H DRAINAGE FROM TOP,5X,6F8.3/1X,
     1    16HBARRIER (INCHES),6X,6F8.3/)
        WRITE(6,250) (ADRN2M(J),J=1,12)
```

```
250   FORMAT(1H /22H DRAINAGE FROM BASE OF,1X,6F8.3/1X,
     1   17HLANDFILL (INCHES),5X,6F8.3/)
        GO TO 340
260   IF(IUNITT.GT.1) GO TO 270
C
C    TWO SUBPROFILES, COVER AND BASE.
C
        WRITE(6,160) (APRC3M(J),J=1,12)
        WRITE(6,230) (APRC2M(J),J=1,12)
        WRITE(6,170) (ADRN3M(J),J=1,12)
        WRITE(6,250) (ADRN2M(J),J=1,12)
        GO TO 340
C
C    TWO SUBPROFILES IN COVER.
C
270   WRITE(6,220) (APRC3M(J),J=1,12)
        WRITE(6,160) (APRC2M(J),J=1,12)
        WRITE(6,240) (ADRN3M(J),J=1,12)
        WRITE(6,170) (ADRN2M(J),J=1,12)
        GO TO 340
280   IF(IUNITT.GT.0) GO TO 310
C
C    THREE SUBPROFILES IN BASE.
C
        WRITE(6,220) (APRC3M(J),J=1,12)
        WRITE(6,290) (APRC2M(J),J=1,12)
290   FORMAT(1H /21H INTERMEDIATE BARRIER,3X,6F8.4/1X,
     1 20HPERCOLATION (INCHES),3X,6F8.4/)
        WRITE(6,230) (APRC1M(J),J=1,12)
        WRITE(6,240) (ADRN3M(J),J=1,12)
        WRITE(6,300) (ADRN2M(J),J=1,12)
300   FORMAT(1H /21H INTERMEDIATE BARRIER,2X,6F8.3/1X,
     1  17HDRAINAGE (INCHES),5X,6F8.3/)
        WRITE(6,250) (ADRN1M(J),J=1,12)
        GO TO 340
310   IF(IUNITT.GT.1) GO TO 320
C
C    THREE SUBPROFILES, ONE IN COVER AND TWO IN BASE.
C
        WRITE(6,160) (APRC3M(J),J=1,12)
        WRITE(6,290) (APRC2M(J),J=1,12)
        WRITE(6,230) (APRC1M(J),J=1,12)
        WRITE(6,170) (ADRN3M(J),J=1,12)
        WRITE(6,300) (ADRN2M(J),J=1,12)
        WRITE(6,250) (ADRN1M(J),J=1,12)
        GO TO 340
320   IF(IUNITT.GT.2) GO TO 330
C
C    THREE SUBPROFILES, TWO IN COVER AND ONE IN BASE.
C
```

```
200.            WRITE(6,220) (APRC3M(J),J=1,12)
201.            WRITE(6,160) (APRC2M(J),J=1,12)
202.            WRITE(6,230) (APRC1M(J),J=1,12)
203.            WRITE(6,240) (ADRN3M(J),J=1,12)
204.            WRITE(6,170) (ADRN2M(J),J=1,12)
205.            WRITE(6,250) (ADRN1M(J),J=1,12)
206.            GO TO 340
207.      C
208.      C    THREE SUBPROFILES IN COVER.
209.      C
210.      330   WRITE(6,220) (APRC3M(J),J=1,12)
211.            WRITE(6,290) (APRC2M(J),J=1,12)
212.            WRITE(6,160) (APRC1M(J),J=1,12)
213.            WRITE(6,240) (ADRN3M(J),J=1,12)
214.            WRITE(6,300) (ADRN2M(J),J=1,12)
215.            WRITE(6,170) (ADRN1M(J),J=1,12)
216.      C
217.      C    WRITES HEADING FOR AVERAGE ANNUAL RESULTS AND PRINTS AVERAGE
218.      C    ANNUAL PRECIPITATION, RUNOFF AND EVAPOTRANSPIRATION.
219.      C
220.        340 WRITE(6,350)
221.        350 FORMAT(1H /1H ,70(1H*),12(/),1H ,70(1H*)/)
222.            WRITE(6,410) JYEAR(1),JYEAR(LMYR),APREA,TAPREA,FAPREA
223.      410   FORMAT(1H ///4X,25HAVERAGE ANNUAL TOTALS FOR,I5,
224.          1  8H THROUGH,I5/2X,70(1H-)/39X,8H(INCHES),4X,
225.          2  9H(CU. FT.),4X,7HPERCENT/39X,8(1H-),4X,9(1H-),4X,
226.          3  7(1H-)/4X,13HPRECIPITATION,22X,F6.2,6X,F9.0,4X,F6.2)
227.            WRITE(6,420) ARUNA,TARUNA,FARUNA
228.      420   FORMAT(1H /4X,6HRUNOFF,29X,F7.3,5X,F9.0,4X,F6.2)
229.            WRITE(6,430) AETA,TAETA,FAETA
230.        430 FORMAT(1H ,/4X,18HEVAPOTRANSPIRATION,17X,F7.3,5X,F9.0,
231.          1  4X,F6.2)
232.            IF(IUNIT.EQ.3) GO TO 540
233.            IF(IUNIT.EQ.2) GO TO 490
234.            IF(IUNITT.EQ.0) GO TO 460
235.      C
236.      C    ONE SUBPROFILE, COVER.
237.      C
238.            WRITE(6,440) APRC3A,TAPC3A.FAPC3A
239.      440   FORMAT(1H ,/4X,25HPERCOLATION FROM BASE OF ,
240.          1   5HCOVER,5X,F7.4,4X,F9.0,4X,F6.2)
241.            WRITE(6,450)ADRN3A,TADN3A,FADN3A
242.        450 FORMAT(1H ,/4X,22HDRAINAGE FROM BASE OF ,
243.          1  5HCOVER,8X,F7.3,5X,F9.0,4X,F6.2)
244.            GO TO 600
245.      C
246.      C    ONE SUBPROFILE, BASE.
247.      C
248.      460   WRITE(6,470) APRC3A,TAPC3A,FAPC3A
249.      470   FORMAT(1H ,/4X,25HPERCOLATION FROM BASE OF ,
```

```
     1   10HLANDFILL  ,F7.4,4X,F9.0,4X,F6.2)
       WRITE(6,480) ADRN3A,TADN3A,FADN3A
480   FORMAT(1H ,/4X,22HDRAINAGE FROM BASE OF ,
     1  8HLANDFILL,5X,F7.3,5X,F9.0,4X,F6.2)
       GO TO 600
490   IF(IUNITT.GT.0) GO TO 520
C
C    TWO SUBPROFILES, NO COVER.
C
       WRITE(6,500) APRC3A,TAPC3A,FAPC3A
500   FORMAT(1H ,/4X,28HPERCOLATION FROM TOP BARRIER,7X,F7.4,
     1  4X,F9.0,4X,F6.2)
       WRITE(6,470)  APRC2A,TAPC2A,FAPC2A
       WRITE(6,510) ADRN3A,TADN3A,FADN3A
510   FORMAT(1H ,/4X,31HDRAINAGE FROM TOP BARRIER LAYER,4X,F7.3,
     1  5X,F9.0,4X,F6.2)
       WRITE(6,480) ADRN2A,TADN2A,FADN2A
       GO TO 600
520   IF(IUNITT.GT.1) GO TO 530
C
C    TWO SUBPROFILES, COVER AND BASE.
C
       WRITE(6,440) APRC3A,TAPC3A,FAPC3A
       WRITE(6,470)  APRC2A,TAPC2A,FAPC2A
       WRITE(6,450) ADRN3A,TADN3A,FADN3A
       WRITE(6,480) ADRN2A,TADN2A,FADN2A
       GO TO 600
C
C    TWO SUBPROFILES IN COVER.
C
530   WRITE(6,500) APRC3A,TAPC3A,FAPC3A
       WRITE(6,440)  APRC2A,TAPC2A,FAPC2A
       WRITE(6,510) ADRN3A,TADN3A,FADN3A
       WRITE(6,450) ADRN2A,TADN2A,FADN2A
       GO TO 600
540   IF(IUNITT.GT.0) GO TO 570
C
C    THREE SUBPROFILES IN BASE.
C
       WRITE(6,500) APRC3A,TAPC3A,FAPC3A
       WRITE(6,550)  APRC2A,TAPC2A,FAPC2A
550   FORMAT(1H ,/4X,21HINTERMEDIATE BARRIER ,
     1  11HPERCOLATION,3X,F7.4,4X,F9.0,4X,F6.2)
       WRITE(6,470) APRC1A,TAPC1A,FAPC1A
       WRITE(6,510) ADRN3A,TADN3A,FADN3A
       WRITE(6,560)ADRN2A,TADN2A,FADN2A
560   FORMAT(1H ,/4X,21HINTERMEDIATE BARRIER ,
     1   8HDRAINAGE,6X,F7.3,4X.F9.0,4X,F6.2)
       WRITE(6,480) ADRN1A,TADN1A,FADN1A
       GO TO 600
```

```
300.      570   IF(IUNITT.GT.1) GO  TO 580
301.      C
302.      C    THREE SUBPROFILES, ONE IN COVER AND TWO IN BASE.
303.      C
304.            WRITE(6,440) APRC3A,TAPC3A,FAPC3A
305.            WRITE(6,550)  APRC2A,TAPC2A,FAPC2A
306.              WRITE(6,470) APRC1A,TAPC1A,FAPC1A
307.            WRITE(6,450) ADRN3A,TADN3A,FADN3A
308.            WRITE(6,560) ADRN2A,TADN2A,FADN2A
309.            WRITE(6,480) ADRN1A,TADN1A,FADN1A
310.            GO TO 600
311.      580   IF(IUNITT.GT.2) GO TO 590
312.      C
313.      C    THREE SUBPROFILES, TWO IN COVER AND ONE IN BASE.
314.      C
315.            WRITE(6,500) APRC3A,TAPC3A,FAPC3A
316.            WRITE(6,440)  APRC2A,TAPC2A,FAPC2A
317.            WRITE(6,470) APRC1A,TAPC1A,FAPC1A
318.            WRITE(6,510) ADRN3A,TADN3A,FADN3A
319.            WRITE(6,450) ADRN2A,TADN2A,FADN2A
320.            WRITE(6,480) ADRN1A,TADN1A,FADN1A
321.            GO TO 600
322.      C
323.      C    THREE SUBPROFILES IN COVER.
324.      C
325.      590   WRITE(6,500) APRC3A,TAPC3A,FAPC3A
326.            WRITE(6,550)  APRC2A,TAPC2A,FAPC2A
327.            WRITE(6,440) APRC1A,TAPC1A,FAPC1A
328.            WRITE(6,510) ADRN3A,TADN3A,FADN3A
329.            WRITE(6,560) ADRN2A,TADN2A,FADN2A
330.            WRITE(6,450) ADRN1A,TADN1A,FADN1A
331.        600 WRITE(6,610)
332.        610 FORMAT(1H ,70(1H*),6(/))
333.            RETURN
334.            END
```

```
C
C      ****************************** OUTDAY ********************
C
C
C     SUBROUTINE OUTDAY PRINTS DAILY RESULTS OF THE SIMULATION.
C
      SUBROUTINE OUTDAY(IUNIT,IUNITT,IUNITB,RUN,IDA,JYEAR,PRE)

      COMMON/BLK15/PRC1,PRC2,PRC3,DRN1,DRN2,DRN3,
     1   SW,ETT,NSTAR,HED1,HED2,HED3,IYR

      DIMENSION JYEAR(20),PRE(370)


      IF(IUNIT.EQ.1) GO TO 40

      IF(IUNIT.EQ.2) GO TO 60
C
C     THREE SUBPROFILES
C
      IF(IUNITT.GT.0) GO TO 10
C
C     THREE SUBPROFILES IN BASE.
C
      CDRN=0.0
      BDRN=DRN1 +DRN2 +DRN3
      CPRC=0.0
      BPRC=PRC1
      CHED=0.0
      BHED=HED1
      GO TO 90

   10 IF(IUNITT.GT.1) GO TO 20
C
C     TWO IN BASE, ONE IN COVER.
C
      CDRN=DRN3
      BDRN=DRN2+DRN1
      CPRC=PRC3
      BPRC=PRC1
      CHED=HED3
      BHED=HED1
      GO TO 90

   20 IF(IUNITT.GT.2) GO TO 30
C
C     ONE IN BASE, TWO IN COVER.
C
      CDRN=DRN3+DRN2
```

```
50.            BDRN=DRN1
51.            CPRC=PRC2
52.            BPRC=PRC1
53.            CHED=HED2
54.            BHED=HED1
55.            GO TO 90
56.      C
57.      C     THREE SUBPROFILES IN COVER.
58.      C
59.       30   CDRN=DRN3+DRN2+DRN1
60.            BDRN=0.0
61.            CPRC=PRC1
62.            BPRC=0.0
63.            CHED=HED1
64.            BHED=0.0
65.            GO TO 90
66.      C
67.      C     ONE SUBPROFILE.
68.      C
69.       40   IF(IUNITT.GT.0) GO TO 50
70.      C
71.      C     ONE SUBPROFILE IN BASE, NO COVER.
72.      C
73.            CDRN=0.0
74.            BDRN=DRN3
75.            CPRC=0.0
76.            BPRC=PRC3
77.            CHED=0.0
78.            BHED=HED3
79.            GO TO 90
80.      C
81.      C     ONE SUBPROFILE IN COVER, NO BASE.
82.      C
83.       50   CDRN=DRN3
84.            BDRN=0.0
85.            CPRC=PRC3
86.            BPRC=0.0
87.            CHED=HED3
88.            BHED=0.0
89.            GO TO 90
90.      C
91.      C     TWO SUBPROFILES.
92.      C
93.       60   IF(IUNITT.GT.0) GO TO 70
94.      C
95.      C     TWO SUBPROFILES IN BASE, NO COVER.
96.      C
97.            CDRN=0.0
98.            BDRN=DRN3+DRN2
99.            CPRC=0.0
```

```
      BPRC=PRC2
      CHED=0.0
      BHED=HED2
      GO TO 90

 70   IF(IUNITT.GT.1) GO TO 80
C
C     ONE IN COVER, ONE IN BASE.
C
      CDRN=DRN3
      BDRN=DRN2
      CPRC=PRC3

      BPRC=PRC2
      CHED=HED3
      BHED=HED2

      GO TO 90
C
C     TWO SUBPROFILES IN COVER, NO BASE.
C
 80   CDRN=DRN3+DRN2
      BDRN=0.0
      CPRC=PRC2
      BPRC=0.0
      CHED=HED2
      BHED=0.0
C
C     PRINTS HEADING
C
 90   IF(IDA.EQ.1) WRITE(6,100) JYEAR(IYR)

 100  FORMAT(1H /////1H ,71(1H*)//1H ,17H DAILY OUTPUT FOR,I5//
     1 44H DAY  RAIN RUNOFF  ET   COVER  COVER  COVER ,
     2 27H  BASE   DEEP   BASE   SOIL/24X,7HHEAD   ,
     3 40HPERC.  DRAIN   HEAD  PERC.  DRAIN  WATER/
     4 7X,39HIN.   IN.   IN.   IN.    IN.    IN.    ,
     5 25HIN.    IN.    IN.   IN/IN/12H ---  ----- ,
     6 33H----- ----- ------ ------ ------ ,
     7 27H------ ------ ------ ------/)
C
C     PRINTS DAILY RESULTS, * INDICATES FREEZING TEMPERATURES.
C
      WRITE(6,110)IDA,NSTAR,PRE(IDA),RUN,ETT,
     1 CHED,CPRC,CDRN,BHED,BPRC,BDRN,SW
 110  FORMAT(1H ,I3,A1,F6.2,F6.3,F6.3,F7.1,F7.4,F7.3,
     1    F7.1,F7.4,F7.3,F7.4)

      RETURN
      END
```

```
C
C      ************************ OUTMO ************************
C
C
C
C     SUBROUTINE OUTMO PRINTS MONTHLY TOTALS.
C
      SUBROUTINE OUTMO(MONTHE,JYEAR,IYR,IUNIT,IUNITT)
      COMMON/BLK12/PRC1M(240),PRC2M(240),PRC3M(240),DRN1M(240),
     1  DRN2M(240),DRN3M(240),RUNM(240),PREM(240),ETM(240)
      DIMENSION JYEAR(20)
C
C     PRINTS HEADING FOR MONTHLY RESULTS AND PRINTS
C     MONTHLY PRECIPITATION, RUNOFF AND EVAPOTRANSPIRATION.
C
      WRITE(6,5)
    5 FORMAT(1H ,6(/),1H ,70(1H*),/)
      WRITE(6,10)JYEAR(IYR)
   10 FORMAT(1H //1H ,/23X,18HMONTHLY TOTALS FOR,I5/)
      WRITE(6,20)
   20 FORMAT(1H ,/25X,24HJAN/JUL FEB/AUG MAR/SEP ,
     1  23HAPR/OCT MAY/NOV JUN/DEC/24X,6(8H ←←←←←←←)/)
      MONTHB=MONTHE-11
      WRITE(6,30)(PREM(J),J=MONTHB,MONTHE)
   30  FORMAT(1H ,/23H PRECIPITATION (INCHES),
     1  6(3X,F5.2)/23X,6(3X,F5.2)/)
      WRITE(6,40)(RUNM(J),J=MONTHB,MONTHE)
   40 FORMAT(1H ,/16H RUNOFF (INCHES),7X,
     1  6(2X,F6.3)/23X,6(2X,F6.3)/)
      WRITE(6,50)(ETM(J),J=MONTHB,MONTHE)
   50 FORMAT(1H ,/19H EVAPOTRANSPIRATION,4X,6(2X,F6.3)/1X,
     1  5X,8H(INCHES),9X,6(2X,F6.3)/)
      IF(IUNIT.EQ.3) GO TO 180
      IF(IUNIT.EQ.2) GO TO 110
      IF(IUNITT.EQ.0) GO TO 80
```

```
50.      C
51.      C     ONE SUBPROFILE, COVER.
52.      C
53.
54.           WRITE(6,60)(PRC3M(J),J=MONTHB,MONTHE)
55.        60 FORMAT(1H ,/22H PERCOLATION FROM BASE,2X,6F8.4/1H ,
56.          1  17HOF COVER (INCHES),6X,6F8.4/)
57.           WRITE(6,70)(DRN3M(J),J=MONTHB,MONTHE)
58.        70 FORMAT(1H ,/22H DRAINAGE FROM BASE OF,1X,6F8.3/1H ,
59.          1  14HCOVER (INCHES),8X,6F8.3/)
60.           GO TO 240
61.
62.      C
63.      C     ONE SUBPROFILE, NO COVER.
64.      C
65.
66.        80 WRITE(6,130)(PRC3M(J),J=MONTHB,MONTHE)
67.           WRITE(6,150)(DRN3M(J),J=MONTHB,MONTHE)
68.           GO TO 240
69.
70.       110 IF(IUNITT.GT.0) GO TO 160
71.
72.      C
73.      C     TWO SUBPROFILES, NO COVER.
74.      C
75.
76.           WRITE(6,120)(PRC3M(J),J=MONTHB,MONTHE)
77.       120 FORMAT(1H ,/21H PERCOLATION FROM TOP,3X,6F8.4/1H ,
78.          1  16HBARRIER (INCHES),7X,6F8.4/)
79.
80.           WRITE(6,130)(PRC2M(J),J=MONTHB,MONTHE)
81.       130 FORMAT(1H ,/22H PERCOLATION FROM BASE,2X,6F8.4/1H ,
82.          1  20HOF LANDFILL (INCHES),3X,6F8.4/)
83.
84.           WRITE(6,140)(DRN3M(J),J=MONTHB,MONTHE)
85.       140 FORMAT(1H ,/18H DRAINAGE FROM TOP,5X,6F8.3/1H ,
86.          1  16HBARRIER (INCHES),6X,6F8.3/)
87.
88.           WRITE(6,150)(DRN2M(J),J=MONTHB,MONTHE)
89.       150 FORMAT(1H ,/22H DRAINAGE FROM BASE OF,1X,6F8.3/1H ,
90.          1  17HLANDFILL (INCHES),5X,6F8.3/)
91.           GO TO 240
92.
93.       160 IF(IUNITT.GT.1) GO TO 170
94.
95.      C
96.      C     TWO SUBPROFILES, COVER AND BASE.
97.      C
98.
99.           WRITE(6,60)(PRC3M(J),J=MONTHB,MONTHE)
```

```
100.          WRITE(6,130)(PRC2M(J),J=MONTHB,MONTHE)
101.          WRITE(6,70)(DRN3M(J),J=MONTHB,MONTHE)
102.          WRITE(6,150)(DRN2M(J),J=MONTHB,MONTHE)
103.          GO TO 240
104.
105.    C
106.    C     TWO SUBPROFILES IN COVER.
107.    C
108.
109.      170 WRITE(6,120)(PRC3M(J),J=MONTHB,MONTHE)
110.          WRITE(6,60)(PRC2M(J),J=MONTHB,MONTHE)
111.          WRITE(6,140)(DRN3M(J),J=MONTHB,MONTHE)
112.          WRITE(6,70)(DRN2M(J),J=MONTHB,MONTHE)
113.          GO TO 240
114.
115.      180 IF(IUNITT.GT.0) GO TO 210
116.
117.    C
118.    C     THREE SUBPROFILES IN BASE.
119.    C
120.
121.          WRITE(6,120)(PRC3M(J),J=MONTHB,MONTHE)
122.          WRITE(6,190)(PRC2M(J),J=MONTHB,MONTHE)
123.      190 FORMAT(1H ,/21H INTERMEDIATE BARRIER,3X,6F8.4/1H ,
124.         1  20HPERCOLATION (INCHES),3X,6F8.4/)
125.          WRITE(6,130)(PRC1M(J),J=MONTHB,MONTHE)
126.          WRITE(6,140)(DRN3M(J),J=MONTHB,MONTHE)
127.          WRITE(6,200)(DRN2M(J),J=MONTHB,MONTHE)
128.      200 FORMAT(1H ,/21H INTERMEDIATE BARRIER,2X,6F8.3/1H ,
129.         1  17HDRAINAGE (INCHES),5X,6F8.3/)
130.          WRITE(6,150)(DRN1M(J),J=MONTHB,MONTHE)
131.          GO TO 240
132.
133.      210 IF(IUNITT.GT.1) GO TO 220
134.
135.    C
136.    C     THREE SUBPROFILES, ONE IN COVER AND TWO IN BASE.
137.    C
138.
139.          WRITE(6,60)(PRC3M(J),J=MONTHB,MONTHE)
140.          WRITE(6,190)(PRC2M(J),J=MONTHB,MONTHE)
141.          WRITE(6,130)(PRC1M(J),J=MONTHB,MONTHE)
142.
143.          WRITE(6,70)(DRN3M(J),J=MONTHB,MONTHE)
144.          WRITE(6,200)(DRN2M(J),J=MONTHB,MONTHE)
145.          WRITE(6,150)(DRN1M(J),J=MONTHB,MONTHE)
146.          GO TO 240
147.      220 IF(IUNITT.GT.2) GO TO 230
148.
149.    C     THREE SUBPROFILES, TWO IN COVER AND ONE IN BASE.
```

```
150.      C
151.
152.            WRITE(6,120)(PRC3M(J),J=MONTHB,MONTHE)
153.            WRITE(6,60)(PRC2M(J),J=MONTHB,MONTHE)
154.            WRITE(6,130)(PRC1M(J),J=MONTHB,MONTHE)
155.
156.            WRITE(6,140)(DRN3M(J),J=MONTHB,MONTHE)
157.            WRITE(6,70)(DRN2M(J),J=MONTHB,MONTHE)
158.            WRITE(6,150)(DRN1M(J),J=MONTHB,MONTHE)
159.
160.            GO TO 240
161.
162.      C
163.      C     THREE SUBPROFILES IN COVER.
164.      C
165.
166.        230 WRITE(6,120)(PRC3M(J),J=MONTHB,MONTHE)
167.            WRITE(6,190)(PRC2M(J),J=MONTHB,MONTHE)
168.            WRITE(6,60)(PRC1M(J),J=MONTHB,MONTHE)
169.
170.            WRITE(6,140)(DRN3M(J),J=MONTHB,MONTHE)
171.            WRITE(6,200)(DRN2M(J),J=MONTHB,MONTHE)
172.            WRITE(6,70)(DRN1M(J),J=MONTHB,MONTHE)
173.
174.        240 WRITE(6,250)
175.        250 FORMAT(1H /1H ,70(1H*),6(/))
176.            RETURN
177.            END
```

```
C
C      ********************** OUTPEK **********************
C
C     SUBROUTINE OUTPEK PRINTS PEAK DAILY RESULTS
C     FOR THE SIMULATION.


      SUBROUTINE OUTPEK(LMYR,IUNIT,IUNITT,JYEAR)

      COMMON/BLK5/TAREA,LINER,FLEAK,FRUNOF,CN2
      COMMON/BLK14/PPRC1,PPRC2,PPRC3,PDRN1,PDRN2,PDRN3,PRUN,PPRE,
     1  PSW,DSW,PHED1,PHED2,PHED3,PSNO

      DIMENSION JYEAR(20)

C
C     PRINTS HEADING,CONVERTS RESULTS FROM INCHES TO
C     CU. FT., AND PRINTS PRECIPITATION AND RUNOFF.
C

      WRITE(6,5)
    5 FORMAT(1H /////1H ,70(1H*))

      WRITE(6,10)JYEAR(1),JYEAR(LMYR)
   10 FORMAT(1H ,/15X,21HPEAK DAILY VALUES FOR,
     1  I5,8H THROUGH,I5/5X,62(1H-)/42X,
     2  8H(INCHES),5X,9H(CU. FT.)/42X,8(1H-),5X,9(1H-))

      TPPRE=TAREA*PPRE/12.0
      WRITE(6,20)PPRE,TPPRE
   20 FORMAT(1H /,7X,13HPRECIPITATION,21X,F6.2,8X,F9.1)

      TPRUN=TAREA*PRUN/12.0
      WRITE(6,30)PRUN,TPRUN
   30 FORMAT(1H /7X,6HRUNOFF,28X,F7.3,7X,F9.1)

      TPPRC3=TAREA*PPRC3/12.0
      TPPRC2=TAREA*PPRC2/12.0
      TPPRC1=TAREA*PPRC1/12.0
      TPDRN3=TAREA*PDRN3/12.0
      TPDRN2=TAREA*PDRN2/12.0
      TPDRN1=TAREA*PDRN1/12.0
      TPSNO=TAREA*PSNO/12.0


      IF(IUNIT.EQ.3) GO TO 140
      IF(IUNIT.EQ.2) GO TO 90
      IF(IUNITT.EQ.0) GO TO 60
```

```
C
C     ONE SUBPROFILE, COVER.
C

      WRITE(6,40) PPRC3,TPPRC3
   40 FORMAT(1H ,/7X,25HPERCOLATION FROM BASE OF ,
     1  5HCOVER,5X,F7.4,6X,F9.1)
      WRITE(6,50)PDRN3,TPDRN3
   50 FORMAT(1H ,/7X,22HDRAINAGE FROM BASE OF ,
     1  5HCOVER,7X,F7.3,7X,F9.1)


      WRITE(6,55)PHED3
   55 FORMAT(1H ,/7X,21HHEAD ON BASE OF COVER,14X,F6.1)

      GO TO 200

C
C     ONE SUBPROFILE, BASE.
C

   60 WRITE(6,70) PPRC3,TPPRC3
   70 FORMAT(1H ,/7X,25HPERCOLATION FROM BASE OF ,
     1  10HLANDFILL  ,F7.4,6X,F9.1)

      WRITE(6,80)PDRN3,TPDRN3
   80 FORMAT(1H ,/7X,22HDRAINAGE FROM BASE OF ,
     1  8HLANDFILL,4X,F7.3,7X,F9.1)

      WRITE(6,85)PHED3
   85 FORMAT(1H ,/7X,24HHEAD ON BASE OF LANDFILL,11X,F6.1)
      GO TO 200

   90 IF(IUNITT.GT.0) GO TO 120

C
C     TWO SUBPROFILES, NO COVER.
C

      WRITE(6,100) PPRC3,TPPRC3
  100 FORMAT(1H ,/7X,28HPERCOLATION FROM TOP BARRIER,7X,
     1  F7.4,6X,F9.1)
      WRITE(6,70) PPRC2,TPPRC2
      WRITE(6,110)PDRN3,TPDRN3
  110 FORMAT(1H ,/7X,31HDRAINAGE FROM TOP BARRIER LAYER,3X,F7.3,7X,F9.1)
      WRITE(6,80) PDRN2,TPDRN2
      WRITE(6,115)PHED3
  115 FORMAT(1H ,/7X,25HHEAD ON TOP BARRIER LAYER,10X,F6.1)
      WRITE(6,85)PHED2
```

```
100.
101.          GO TO 200
102.
103.      120 IF(IUNITT.GT.1) GO TO 130
104.
105.    C
106.    C     TWO SUBPROFILES, BASE AND COVER.
107.    C
108.
109.          WRITE(6,40) PPRC3,TPPRC3
110.          WRITE(6,70) PPRC2,TPPRC2
111.          WRITE(6,50)PDRN3,TPDRN3
112.          WRITE(6,80) PDRN2,TPDRN2
113.          WRITE(6,55)PHED3
114.          WRITE(6,85)PHED2
115.
116.          GO TO 200
117.
118.    C
119.    C     TWO SUBPROFILES IN COVER, NO BASE.
120.    C
121.
122.      130 WRITE(6,100) PPRC3,TPPRC3
123.          WRITE(6,40) PPRC2,TPPRC2
124.          WRITE(6,110)PDRN3,TPDRN3
125.          WRITE(6,50) PDRN2,TPDRN2
126.          WRITE(6,115)PHED3
127.          WRITE(6,55)PHED2
128.
129.          GO TO 200
130.
131.      140 IF(IUNITT.GT.0) GO TO 170
132.
133.    C
134.    C     THREE SUBPROFILES IN BASE.
135.    C
136.
137.          WRITE(6,100) PPRC3,TPPRC3
138.          WRITE(6,150) PPRC2,TPPRC2
139.      150 FORMAT(1H ,/7X,21HINTERMEDIATE BARRIER ,
140.         1  11HPERCOLATION,3X,F7.4,6X,F9.1)
141.          WRITE(6,70) PPRC1,TPPRC1
142.
143.          WRITE(6,110)PDRN3,TPDRN3
144.          WRITE(6,160) PDRN2,TPDRN2
145.      160 FORMAT(1H ,/7X,21HINTERMEDIATE BARRIER ,
146.         1  8HDRAINAGE,5X,F7.3,7X,F9.1)
147.          WRITE(6,80) PDRN1,TPDRN1
148.          WRITE(6,115)PHED3
149.          WRITE(6,165)PHED2
```

```
  165 FORMAT(1H ,/7X,21HHEAD ON INTERMEDIATE ,
     1  7HBARRIER,7X,F6.1)
      WRITE(6,85)PHED1

      GO TO 200

  170 IF(IUNITT.GT.1) GO TO 180

C
C     THREE SUBPROFILES, ONE IN COVER AND TWO IN BASE.
C

      WRITE(6,40) PPRC3,TPPRC3
      WRITE(6,150) PPRC2,TPPRC2
      WRITE(6,70) PPRC1,TPPRC1
      WRITE(6,50)PDRN3,TPDRN3
      WRITE(6,160) PDRN2,TPDRN2
      WRITE(6,80) PDRN1,TPDRN1
      WRITE(6,55)PHED3
      WRITE(6,165)PHED2
      WRITE(6,85)PHED1

      GO TO 200

  180 IF(IUNITT.GT.2) GO TO 190

C
C     THREE SUBPROFILES, TWO IN COVER AND ONE IN BASE.
C

      WRITE(6,100) PPRC3,TPPRC3
      WRITE(6,40) PPRC2,TPPRC2
      WRITE(6,70) PPRC1,TPPRC1
      WRITE(6,110)PDRN3,TPDRN3
      WRITE(6,50) PDRN2,TPDRN2
      WRITE(6,80) PDRN1,TPDRN1
      WRITE(6,115)PHED3
      WRITE(6,55)PHED2
      WRITE(6,85)PHED1

      GO TO 200

C
C     THREE SUBPROFILES IN COVER
C

  190 WRITE(6,100) PPRC3,TPPRC3
      WRITE(6,150) PPRC2,TPPRC2
      WRITE(6,40) PPRC1,TPPRC1
      WRITE(6,110)PDRN3,TPDRN3
```

```
      WRITE(6,160) PDRN2,TPDRN2
      WRITE(6,50) PDRN1,TPDRN1

C
C     PRINTS SNOW AND VEGETATIVE SOIL WATER CONTENT.
C

  200 WRITE(6,210)PSNO,TPSNO
  210 FORMAT(1H ,/7X,10HSNOW WATER,24X,F8.2,6X,F9.1)

      WRITE(6,220)PSW
  220 FORMAT(1H ////7X,13HMAXIMUM VEG. ,
     1  20HSOIL WATER (VOL/VOL),7X,F7.4)

      WRITE(6,230)DSW
  230 FORMAT(1H ,/7X,24HMINIMUM VEG. SOIL WATER ,
     1  9H(VOL/VOL),7X,F7.4)

      WRITE(6,240)
  240 FORMAT(1H /1H ,70(1H*)/1H ,70(1H*),6(/))

      RETURN
      END
```

```
C
C      ************************* OUTSD *************************
C
C     SUBROUTINE OUTSD PRINTS THE SOIL
C     CHARACTERISTICS AND DESIGN INFORMATION.

      SUBROUTINE OUTSD(KVEG,CONA,ULE,SWULE,RDEPTH,ISAND)

      COMMON/BLK2/PORO(9),FC(9),WP(9),CON(9),RC(9)
      COMMON/BLK3/SLOPE(9),XLENG(9)
      COMMON/BLK4/ LAYER(10),THICK(9),LAY
      COMMON/BLK5/TAREA,LINER,FLEAK,FRUNOF,CN2
      IF(ISAND.EQ.1)WRITE(6,5)
      IF(KVEG.LT.1.OR.KVEG.GT.7) GO TO 80
    5  FORMAT(1H /12X,33H THE TOP LAYER IS AN UNVEGETATED ,
     1 21HSAND OR GRAVEL LAYER./)
C     PRINTS VEGETATION TYPE USED FOR INPUT OF
C     DEFAULT SOIL CHARACTERISTICS.
C

      IF(KVEG.EQ.1)WRITE(6,10)
   10 FORMAT(1H /32X,11HBARE GROUND/)
      IF(KVEG.EQ.2)WRITE(6,20)
   20 FORMAT(1H /30X,15HEXCELLENT GRASS/)
      IF(KVEG.EQ.3)WRITE(6,30)
   30 FORMAT(1H /32X,10HGOOD GRASS/)
      IF(KVEG.EQ.4)WRITE(6,40)
   40 FORMAT(1H /32X,10HFAIR GRASS/)
      IF(KVEG.EQ.5)WRITE(6,50)
   50 FORMAT(1H /32X,10HPOOR GRASS/)
      IF(KVEG.EQ.6)WRITE(6,60)
   60 FORMAT(1H /31X,13HGOOD ROW CROP/)
      IF(KVEG.EQ.7)WRITE(6,70)
   70 FORMAT(1H /31X,13HFAIR ROW CROP/)

C
C     PRINTS SOIL CHARACTERISTICS AND DESIGN INFORMATION
C     FOR EACH LAYER.
C

   80 DO 170 I=1,LAY
      WRITE(6,90)I
   90 FORMAT(1H //33X,5HLAYER,I2/33X,7(1H-)//)

      IF(LAYER(I).EQ.1)WRITE(6,100)
  100 FORMAT(10X,26HVERTICAL PERCOLATION LAYER)
      IF(LAYER(I).EQ.2)WRITE(6,110)
  110 FORMAT(10X,22HLATERAL DRAINAGE LAYER)
```

```
      IF(LAYER(I).EQ.3)WRITE(6,120)
  120 FORMAT(10X,18HBARRIER SOIL LAYER)
      IF(LAYER(I).EQ.4)WRITE(6,130)
  130 FORMAT(10X,11HWASTE LAYER)
      IF(LAYER(I).EQ.5)WRITE(6,140)
  140 FORMAT(10X,29HBARRIER SOIL LAYER WITH LINER)

      K=I+1
      IF(LAYER(I).EQ.2.AND.LAYER(K).NE.2)WRITE(6,150)SLOPE(I),XLENG(I)
  150 FORMAT(10X,5HSLOPE,31X,1H=,F9.2,8H PERCENT/
     1 10X,15HDRAINAGE LENGTH,21X,1H=,F8.1,5H FEET)

      WRITE(6,160)THICK(I),CON(I),PORO(I),FC(I),WP(I),RC(I)
  160 FORMAT(10X,9HTHICKNESS,27X,1H=,F9.2,7H INCHES/
     1 10X,23HEVAPORATION COEFFICIENT,13X,1H=,F10.3,12H MM/DAY**0.5/
     2 10X,8HPOROSITY,28X,1H=,F11.4,8H VOL/VOL/
     3 10X,14HFIELD CAPACITY,22X,1H=,F11.4,8H VOL/VOL/
     4 10X,13HWILTING POINT,23X,1H=,F11.4,8H VOL/VOL/
     5 10X,37HEFFECTIVE HYDRAULIC CONDUCTIVITY    =,F15.8,
     6 10H INCHES/HR///)

  170 CONTINUE
C
C     PRINTS OTHER SITE DESIGN DATA AND SIMULATION DATA.
C

      WRITE(6,175)
  175 FORMAT(1H //25X,23HGENERAL SIMULATION DATA/25X,23(1H-)//)
      WRITE(6,180)CN2,TAREA,RDEPTH
  180 FORMAT(10X,23HSCS RUNOFF CURVE NUMBER,13X,1H=,F11.2/
     2 10X,19HTOTAL AREA OF COVER,17X,1H=,F9.0,7H SQ. FT/
     1 10X,22HEVAPORATIVE ZONE DEPTH,14X,1H=,F11.2,7H INCHES)


      IF(LAYER(1).EQ.4)WRITE(6,190)FRUNOF
  190 FORMAT(10X,25HPOTENTIAL RUNOFF FRACTION,11X,1H=,F15.6)
      IF(LINER.GT.0)WRITE(6,200)FLEAK
  200 FORMAT(10X,22HLINER LEAKAGE FRACTION,14X,1H=,F15.6)
      WRITE(6,210)CONA,ULE,SWULE
  210 FORMAT(10X,37HEFFECTIVE EVAPORATION COEFFICIENT   =,F12.3,
     1 12H MM/DAY**0.5/10X,24HUPPER LIMIT VEG. STORAGE,12X,
     2 1H=,F13.4,7H INCHES/10X,20HINITIAL VEG. STORAGE,16X,
     3 1H=,F13.4,7H INCHES///)

      REWIND 11
      READ(11,215)KCDATA
  215 FORMAT(I5)

      IF(KCDATA.EQ.0) GO TO 240

```

```
C
C     PRINTS CITY AND STATE SELECTED FOR DEFAULT
C     CLIMATOLOGIC INPUT WHEN THIS OPTION WAS USED.
C

      READ(11,220)KSTATE,K1,K2,K3,K4,KCITY,K5,K6,K7,K8
  220 FORMAT(10A4)
      REWIND 11
      WRITE(6,230)KCITY,K5,K6,K7,K8,KSTATE,K1,K2,K3,K4
  230 FORMAT(7X,22HCLIMATOLOGIC DATA FOR ,3X,10A4)
 240  RETURN
      END
```

```
C
C      ************************ OUTYR ************************
C
C     SUBROUTINE OUTYR PRINTS THE ANNUAL TOTALS
C     FOR A YEAR OF SIMULATION RESULTS.

      SUBROUTINE OUTYR(IYR,IUNIT,IUNITT,SNO,OLDSNO)

      COMMON/BLK13/PRC1A(20),PRC2A(20),PRC3A(20),DRN1A(20),
     1   DRN2A(20),DRN3A(20),RUNA(20),PREA(20),ETA(20),JYEAR(20),
     2   BAL(20),OSWULE,PSWULE

      COMMON/BLK5/TAREA,LINER,FLEAK,FRUNOF,CN2

      TPREA=TAREA*PREA(IYR)/12.0
      FPREA=100.0
      WRITE(6,5)
    5 FORMAT(1H ,6(/),1H ,70(1H*)/)

C     PRINTS HEADING AND PRECIPITATION IN INCHES,
C     CU. FT. AND PERCENT OF THE ANNUAL PRECIPITATION.

      WRITE(6,10)JYEAR(IYR),PREA(IYR),TPREA,FPREA
   10 FORMAT(1H ///22X,17HANNUAL TOTALS FOR,I5/
     1  2X,70(1H-)/39X,8H(INCHES),4X,9H(CU. FT.),
     2  4X,7HPERCENT/39X,8(1H-),4X,9(1H-),4X,
     3  7(1H-)/4X,13HPRECIPITATION,22X,
     4  F6.2,6X,F9.0,4X,F6.2)

C     CONVERTS RESULTS FROM INCHES TO CU. FT. AND TO
C     PERCENT OF THE ANNUAL PRECIPITATION AND PRINTS
C     RUNOFF AND EVAPOTRANSPIRATION.

      TRUNA=TAREA*RUNA(IYR)/12.0
      FRUNA=TRUNA*100.0/TPREA

      WRITE(6,20)RUNA(IYR),TRUNA,FRUNA
   20 FORMAT(1H ,/4X,6HRUNOFF,29X,F7.3,5X,F9.0,4X,F6.2)

      TETA=TAREA*ETA(IYR)/12.0
      FETA=TETA*100.0/TPREA
      WRITE(6,30) ETA(IYR),TETA,FETA
   30 FORMAT(1H ,/4X,18HEVAPOTRANSPIRATION,17X
     1  ,F7.3,5X,F9.0,4X,F6.2)

      TPRC3A=PRC3A(IYR)*TAREA/12.0
      FPRC3A=TPRC3A*100.0/TPREA
```

```
50.          TPRC2A=PRC2A(IYR)*TAREA/12.0
51.          FPRC2A=TPRC2A*100.0/TPREA
52.
53.          TPRC1A=PRC1A(IYR)*TAREA/12.0
54.          FPRC1A=TPRC1A*100.0/TPREA
55.
56.          TDRN3A=DRN3A(IYR)*TAREA/12.0
57.          FDRN3A=TDRN3A*100.0/TPREA
58.
59.          TDRN2A=DRN2A(IYR)*TAREA/12.0
60.          FDRN2A=TDRN2A*100.0/TPREA
61.
62.          TDRN1A=DRN1A(IYR)*TAREA/12.0
63.          FDRN1A=TDRN1A*100.0/TPREA
64.
65.
66.          IF(IUNIT.EQ.3) GO TO 140
67.          IF(IUNIT.EQ.2) GO TO 90
68.          IF(IUNITT.EQ.0) GO TO 60
69.
70.    C     ONE SUBPROFILE, COVER WITHOUT BASE.
71.
72.          WRITE(6,40) PRC3A(IYR),TPRC3A,FPRC3A
73.       40 FORMAT(1H ,/4X,25HPERCOLATION FROM BASE OF ,
74.         1  5HCOVER,6X,F7.4,4X,F9.0,4X,F6.2)
75.
76.          WRITE(6,50) DRN3A(IYR),TDRN3A,FDRN3A
77.       50 FORMAT(1H ,/4X,22HDRAINAGE FROM BASE OF ,
78.         1  5HCOVER,8X,F7.3,5X,F9.0,4X,F6.2)
79.
80.          GO TO 200
81.
82.    C     ONE SUBPROFILE, BASE WITHOUT COVER.
83.
84.       60 WRITE(6,70) PRC3A(IYR),TPRC3A,FPRC3A
85.       70 FORMAT(1H ,/4X,25HPERCOLATION FROM BASE OF ,
86.         1  11HLANDFILL    ,F7.4,4X,F9.0,4X,F6.2)
87.          WRITE(6,80) DRN3A(IYR),TDRN3A,FDRN3A
88.       80 FORMAT(1H ,/4X,22HDRAINAGE FROM BASE OF ,
89.         1  8HLANDFILL,5X,F7.3,5X,F9.0,4X,F6.2)
90.          GO TO 200
91.
92.       90 IF(IUNITT.GT.0) GO TO 120
93.
94.    C     TWO SUBPROFILES IN BASE, NO COVER.
95.
96.          WRITE(6,100) PRC3A(IYR),TPRC3A,FPRC3A
97.      100 FORMAT(1H ,/4X,28HPERCOLATION FROM TOP BARRIER,8X,F7.4
98.         1  ,4X,F9.0,4X,F6.2)
99.          WRITE(6,70) PRC2A(IYR),TPRC2A,FPRC2A
```

```
      WRITE(6,110) DRN3A(IYR),TDRN3A,FDRN3A
  110 FORMAT(1H ,/4X,31HDRAINAGE FROM TOP BARRIER LAYER,4X,F7.3
     1  ,5X,F9.0,4X,F6.2)
      WRITE(6,80) DRN2A(IYR),TDRN2A,FDRN2A
      GO TO 200

  120 IF(IUNITT.GT.1) GO TO 130

C     TWO SUBPROFILES, COVER AND BASE.

      WRITE(6,40) PRC3A(IYR),TPRC3A,FPRC3A
      WRITE(6,70) PRC2A(IYR),TPRC2A,FPRC2A
      WRITE(6,50) DRN3A(IYR),TDRN3A,FDRN3A
      WRITE(6,80) DRN2A(IYR),TDRN2A,FDRN2A
      GO TO 200

C     TWO SUBPROFILES IN COVER, NO BASE.

  130 WRITE(6,100) PRC3A(IYR),TPRC3A,FPRC3A
      WRITE(6,40) PRC2A(IYR),TPRC2A,FPRC2A
      WRITE(6,110) DRN3A(IYR),TDRN3A,FDRN3A
      WRITE(6,50) DRN2A(IYR),TDRN2A,FDRN2A
      GO TO 200

  140 IF(IUNITT.GT.0) GO TO 170

C     THREE SUBPROFILES IN BASE, NO COVER.

      WRITE(6,100) PRC3A(IYR),TPRC3A,FPRC3A
      WRITE(6,150) PRC2A(IYR),TPRC2A,FPRC2A
  150 FORMAT(1H ,/4X,21HINTERMEDIATE BARRIER ,
     1  11HPERCOLATION,4X,F7.4,4X,F9.0,4X,F6.2)
      WRITE(6,70) PRC1A(IYR),TPRC1A,FPRC1A

      WRITE(6,110) DRN3A(IYR),TDRN3A,FDRN3A
      WRITE(6,160) DRN2A(IYR),TDRN2A,FDRN2A
  160 FORMAT(1H ,/4X,21HINTERMEDIATE BARRIER ,
     1  8HDRAINAGE,6X,F7.3,5X,F9.0,4X,F6.2)
      WRITE(6,80) DRN1A(IYR),TDRN1A,FDRN1A
      GO TO 200

  170 IF(IUNITT.GT.1) GO TO 180

C     THREE SUBPROFILES, TWO IN BASE AND ONE IN COVER.

      WRITE(6,40) PRC3A(IYR),TPRC3A,FPRC3A
      WRITE(6,150) PRC2A(IYR),TPRC2A,FPRC2A
      WRITE(6,70) PRC1A(IYR),TPRC1A,FPRC1A
      WRITE(6,50) DRN3A(IYR),TDRN3A,FDRN3A
      WRITE(6,160) DRN2A(IYR),TDRN2A,FDRN2A
```

```
150.          WRITE(6,80) DRN1A(IYR),TDRN1A,FDRN1A
151.          GO TO 200
152.
153.      180 IF(IUNITT.GT.2) GO TO 190
154.
155.    C     THREE SUBPROFILES, ONE IN BASE AND TWO IN COVER.
156.
157.          WRITE(6,100) PRC3A(IYR),TPRC3A,FPRC3A
158.          WRITE(6,40) PRC2A(IYR),TPRC2A,FPRC2A
159.          WRITE(6,70) PRC1A(IYR),TPRC1A,FPRC1A
160.          WRITE(6,110) DRN3A(IYR),TDRN3A,FDRN3A
161.          WRITE(6,50) DRN2A(IYR),TDRN2A,FDRN2A
162.          WRITE(6,80) DRN1A(IYR),TDRN1A,FDRN1A
163.          GO TO 200
164.
165.    C     THREE SUBPROFILES IN COVER, NO BASE.
166.
167.      190 WRITE(6,100) PRC3A(IYR),TPRC3A,FPRC3A
168.          WRITE(6,150) PRC2A(IYR),TPRC2A,FPRC2A
169.          WRITE(6,40) PRC1A(IYR),TPRC1A,FPRC1A
170.          WRITE(6,110) DRN3A(IYR),TDRN3A,FDRN3A
171.          WRITE(6,160) DRN2A(IYR),TDRN2A,FDRN2A
172.          WRITE(6,50) DRN1A(IYR),TDRN1A,FDRN1A
173.
174.    C     PRINTS STORAGE TERMS AND BUDGET BALANCE.
175.
176.      200 TBAL=TAREA*BAL(IYR)/12.0
177.          FBAL=TBAL*100.0/TPREA
178.
179.          TOSNO=TAREA*OLDSNO/12.0
180.          TPSW=PSWULE*TAREA/12.0
181.          TOSW=OSWULE*TAREA/12.0
182.          WRITE(6,202)OSWULE,TOSW
183.      202 FORMAT(1H ,/4X,11HSOIL WATER ,
184.         1  16HAT START OF YEAR,8X,F6.2,6X,F9.0)
185.
186.          WRITE(6,203)PSWULE,TPSW
187.      203 FORMAT(1H ,/4X,18HSOIL WATER AT END ,
188.         1  7HOF YEAR,10X,F6.2,6X,F9.0)
189.
190.          WRITE(6,204)OLDSNO,TOSNO
191.      204 FORMAT(1H ,/4X,20HSNOW WATER AT START ,
192.         1  7HOF YEAR,8X,F6.2,6X,F9.0)
193.
194.          TSNO=TAREA*SNO/12.0
195.          WRITE(6,205)SNO,TSNO
196.      205 FORMAT(1H /4X,25HSNOW WATER AT END OF YEAR,
197.         1  10X,F6.2,6X,F9.0)
198.
199.          WRITE(6,210)BAL(IYR),TBAL,FBAL
```

```
  210 FORMAT(1H ,/4X,27HANNUAL WATER BUDGET BALANCE,8X,F6.2
     1,6X,F9.0,4X,F6.2)

      WRITE(6,220)
  220 FORMAT(1H /1H ,70(1H*),6(/))

      RETURN
      END
```

```
C
C      ************************ POTET ************************
C
C     SUBROUTINE POTET COMPUTES THE DAILY POTENTIAL
C     EVAPOTRANSPIRATION VALUES FOR A YEAR OF SIMULATION.

      SUBROUTINE POTET(ETO)
      COMMON/BLK8/PRE(370),TMPF(366),RAD(366),DLAI(367),GR,XLAI1

      DIMENSION ETO(366)

      DATA G,ALB/0.68,0.23/

      DO 10 I=1,366

C     CONVERTS TEMPERATURE VALUE FROM DEGREES
C     FAHRENHEIT TO DEGREES KELVIN.

        TK=((TMPF(I)-32.0)*5.0/9.0)+273.0

C     COMPUTES SLOPE OF VAPOR PRESSURE CURVE, A, AND NET
C     SOLAR RADIATION, H, AND POTENTIAL EVAPOTRANSPIRATION, ETO.

        A=(5304./(TK*TK))*EXP(21.255-(5304./TK))
        H=(1-ALB)*RAD(I)/58.3
        ETO(I)=1.28*A*H/((A+G)*25.4)
        IF(ETO(I).LT.0.0)ETO(I)=0.0
   10 CONTINUE
      RETURN
      END
```

```
C
C      ************************ PRECHK ************************
C
      SUBROUTINE PRECHK(KKOUNT)
C
C
C     SUBROUTINE PRECHK IS USED TO CHECK AND CORRECT
C     MANUAL PRECIPITATION INPUT.

C
      DIMENSION IMYEAR(20),RAIN(20,37,10),
     1   KLM(74),VALUE(10)
      WRITE(6,10)
   10 FORMAT(1H /1H ,4H9.1 ,36HDO YOU WANT TO CHECK OR CORRECT THE ,
     1 29HPRECIPITATION VALUES ENTERED/1X,16HENTER YES OR NO.//)
      CALL ANSWER(IANS)
      IF(IANS.EQ.1) RETURN
      KKOUNT=0

C     READS ALL PRECIPITATION DATA.
      REWIND 4

      DO 40 I=1,20
      DO 30 J=1,37
      READ(4,20,END=50)IMYEAR(I),(RAIN(I,J,K),K=1,10)
   20 FORMAT(I10,10F5.2)
   30 CONTINUE
      KKOUNT=I
   40 CONTINUE
      REWIND 4
   50 IF(KKOUNT.EQ.0) GO TO 260

C     WRITES YEARS OF PRECIPITATION DATA.

   55 WRITE(6,60)KKOUNT,(IMYEAR(I),I=1,KKOUNT)
   60 FORMAT(1H /1H ,4H9.2 ,14HDATA EXIST FOR,I3,
     1 9H YEARS:  ,4(5(I4,2H  )/))
   70 WRITE (6,80)
   80 FORMAT(1H /1H ,4H9.3 ,25HENTER YEAR TO BE CHECKED./)
      READ(10,90) (KLM(J),J=1,74)
   90 FORMAT(74A1)
      CALL SCAN(NO,VALUE,74,KLM)
      NYR=VALUE(1)

C     ISET IS THE NUMBER OF THE YEAR TO BE CHECKED.
C     NYR IS THE YEAR TO BE CHECKED.

      DO 100 I=1, KKOUNT
      ISET=I
```

```
      IF(NYR.EQ.IMYEAR(I))GO TO 120
  100 CONTINUE
      WRITE(6,110) NYR
  110 FORMAT(1H /5H 9.4 ,14HDATA FOR YEAR ,I4,15H ARE NOT IN THE,
     1 11H DATA FILE./)
      GO TO 70
  120 WRITE(6,130)IMYEAR(ISET)
  130 FORMAT(1H /1H ,4H9.5 ,13HTHE DATA FOR ,I4,5H ARE://)

C     PRINTS PRECIPITATION DATA FOR YEAR TO BE CHECKED.

      DO 140 J=1,37
      WRITE(6,135)IMYEAR(ISET),(RAIN(ISET,J,K),K=1,10),J
 135  FORMAT(1H ,I10,10F5.2,I10)
  140 CONTINUE
      WRITE(6,150)
  150 FORMAT(1H /5H 9.6 ,40HDO YOU WANT TO CHANGE OR CORRECT ANY OF ,
     1 13HTHESE VALUES/1X,16HENTER YES OR NO.//)
      CALL ANSWER(IANS)
      IF(IANS.EQ.1) GO TO 230
  160 WRITE(6,170)
  170 FORMAT(1H /1H ,4H9.7 ,35HENTER NUMBER OF LINE TO BE CHANGED./)
      READ(10,90)(KLM(J),J=1,74)
      CALL SCAN(NO,VALUE,74,KLM)
      JSET=VALUE(1)

C     JSET IS THE NUMBER OF LINE TO BE CORRECTED.

      IF(JSET.GE.1.AND.JSET.LE.37) GO TO 190
      WRITE(6,180)
  180 FORMAT(1H /5H 9.8 ,37HLINE NUMBERS MUST RANGE FROM 1 TO 37./
     1 1X,10HTRY AGAIN./)
      GO TO 160
  190 WRITE(6,200)
  200 FORMAT(1H /46H 9.9 ENTER THE TEN DAILY PRECIPITATION VALUES./)
      READ(10,90)(KLM(J),J=1,74)
      CALL SCAN(NO,VALUE,74,KLM)

C     REPLACES PRECIPITATION VALUES IN ARRAY RAIN.

      DO 210 K=1,10
      RAIN(ISET,JSET,K)=VALUE(K)
  210 CONTINUE
      WRITE(6,220)
  220 FORMAT(1H /6H 9.10 ,30HDO YOU WANT TO CHANGE ANOTHER ,
     1 18HLINE OF THIS YEAR/1X,16HENTER YES OR NO./)
      CALL ANSWER(IANS)
      IF(IANS.EQ.0) GO TO 160
  230 WRITE(6,240)
  240 FORMAT(1H /45H 9.11 DO YOU WANT TO CHECK OR CORRECT ANOTHER,/
```

```
     1 30H YEAR OF PRECIPITATION VALUES/17H ENTER YES OR NO./)
      CALL ANSWER(IANS)
      IF(IANS.EQ.0) GO TO 70

C     WRITES ALL PRECIPITATION DATA ON TAPE 4.
      REWIND 4

      DO 250 I=1,KKOUNT
      DO 250 J=1,37
      WRITE(4,255)IMYEAR(I),(RAIN(I,J,K),K=1,10),J
  255 FORMAT(II0,10F5.2,II0)
  250 CONTINUE
      REWIND 4
      RETURN
  260 WRITE(6,270)
  270 FORMAT(1H /45H 9.12 THE DATA FILE CONTAINS NO PRECIPITATION,
     1  8H VALUES./)
      RETURN
      END
```

```
C
C       ************************ PROFIL ************************
C
C     SUBROUTINE PROFIL DISTRIBUTES WATER IN A SUBPROFILE
C     FROM SUPERSATURATED SEGMENTS TO THE SEGMENTS
C     DIRECTLY ABOVE THE SUPERSATURATED SEGMENTS.

      SUBROUTINE PROFIL(KK,EXCESS,NSEGB,NSEGL,SWULY,E,BALT,DRIN,
     1   BALY)


      COMMON/BLK7/STHICK(16),UL(16),FCUL(16),WPUL(16),
     1   SWUL(16),RCUL(16)

      DIMENSION SWULY(16),E(16),BALT(16),DRIN(17),BALY(16)

      EXCESS=0.0

      DO 10   J=NSEGB,NSEGL

      K=NSEGL+NSEGB-J

C     EXCESS IS THE EXCESS WATER(ABOVE SATURATION) IN THE SEGMENT
C     DIRECTLY BELOW THE SEGMENT BEING EVALUATED.

      S=SWUL(K)+EXCESS+(BALT(K)/2.0)
       EXCE=EXCESS
      EXCESS=S-UL(K)

      IF (EXCESS.GT.0.0)GO TO 5
       EXCESS=0.0
      SWUL(K)=S-(BALT(K)/2.0)-EXCE/2.0
      GO TO 8
C     THE DRAINAGE AND CHANGE OF STORAGE ARE RECOMPUTED
C     TO ACCOUNT FOR THE REDISTRIBUTION OF SOIL WATER.

    5  IF(BALY(K).LT.0.00001)BALY(K)=0.0
      BALT(K)=UL(K)-SWULY(K)-(BALY(K)/2.0)
      SWUL(K)=UL(K)-(BALT(K)/2.0)
      GO TO 9
    8   BALT(K)=2*(SWUL(K)-SWULY(K))-BALY(K)
    9   DRIN(K)=BALT(K)+DRIN(K+1)+E(K)
   10 CONTINUE

C     THE EXCESS IN THE TOP SEGMENT OF A SUBPROFILE
C     IS KEPT IN THE TOP SEGMENT.

      SWUL(NSEGB)=SWUL(NSEGB)+EXCESS
```

```
      BALT(NSEGB)=BALT(NSEGB)+EXCESS
      DRIN(NSEGB)=DRIN(NSEGB)+EXCESS
      RETURN
      END
```

```
C
C      ************************ READCD ************************
C
C
C    SUBROUTINE READCD READS A YEAR OF CLIMATOLOGIC
C    DATA DURING A YEAR OF SIMULATION.
C
      SUBROUTINE READCD(NYEAR,ND,ISET,JSET,KSET,LSET,MSET,NT)
      COMMON/BLK1/KCDATA,KSDATA,KFLAG,IFLAG,KVEG,
     1 IO1,IO2,IO3,IO4,IO5
      COMMON/BLK4/LAYER(10),THICK(9),LAY
      COMMON/BLK8/PRE(370),TMPF(366),RAD(366),DLAI(367),GR,XLAI1
      COMMON/BLK10/LDAY13(13),XLAI13(13)
      DIMENSION TMPFM(12),RADIM(12),TEMP(12),RADI(12)
C
C    READS PRECIPITATION DATA.
C
      DO 20 K=1,37
        J=10*K
        I=J-9
        READ(4,10)NYEAR,(PRE(N),N=I,J)
   10 FORMAT(I10,10F5.2)
   20 CONTINUE
C
C    DETERMINES IF THE YEAR IS A LEAP YEAR.
C
      ND=LEAP(NYEAR,NT)
      IF(ISET.GT.0)GO TO 90
C
C    ISET=1 IF ONLY ONE SET OF TEMPERATURES IS TO BE USED FOR
C    ALL YEARS OF SIMULATION.
C
      NDA=366
      M=12
C
C    READS MEAN MONTHLY TEMPERATURES AND COMPUTES DAILY
C    TEMPERATURES IN DEGRESS FAHRENHEIT.
C
      READ(7,30)LYEAR,(TEMP(I),I=1,12)
   30 FORMAT(I5,12F6.1)
      IF(LYEAR.LE.0)ISET=1
      IF(LYEAR.LE.0) REWIND 7
      CALL DATFIT(M,TEMP,T0,T1,T2)
      DO 40 I=1,12
        TMPFM(I)=COMPUT(T0,T1,T2,I,M)
   40 CONTINUE
      IF(IO1.EQ.1.OR.IO3.EQ.1.OR.IO5.EQ.1)GO TO 75
C
C    PRINTS MEANS MONTHLY TEMPERATURES.
```

```
C
      WRITE(6,50)
   50 FORMAT(1H ,/14X,35HMONTHLY MEAN TEMPERATURES, DEGREES ,
     1  10HFAHRENHEIT)
      WRITE(6,60)
   60 FORMAT(1H /1H ,2X,7HJAN/JUL,5X,7HFEB/AUG,5X,7HMAR/SEP,5X,
     1 7HAPR/OCT,5X,7HMAY/NOV,5X,7HJUN/DEC/3X,7H-------,
     2 5(5X,7H-------))

      WRITE(6,70)(TMPFM(I),I=1,12)
   70 FORMAT(1H ,F8.2,5F12.2)

  75    DO 80 I=1,NDA
        TMPF(I)=COMPUT(T0,T1,T2,I,NDA)
   80 CONTINUE
C
C    READS MEANS MONTHLY SOLAR RADIATION AND COMPUTES DAILY
C    SOLAR RADIATION VALUES IN LANGLEYS PER DAY.
C
   90 IF(JSET.GT.0)GO TO 130
C
C    JSET=1 IF ONLY ONE SET OF SOLAR RADIATION VALUE IS
C    TO BE USED FOR ALL YEARS OF SIMULATION.
C
      READ(13,30) LYEAR,(RADI(I),I=1,12)
      IF(LYEAR.LE.0)JSET=1
      IF(LYEAR.LE.0) REWIND 13
      CALL DATFIT(M,RADI,R0,R1,R2)
      DO 100 I=1,12
        RADIM(I)=COMPUT(R0,R1,R2,I,M)
  100 CONTINUE

      IF(IO1.EQ.1.OR.IO3.EQ.1.OR.IO5.EQ.1)GO TO 115
      WRITE(6,110)
  110 FORMAT(1H ,/12X,32H MONTHLY MEANS SOLAR RADIATION, ,
     1 16HLANGLEYS PER DAY)
C
C    PRINTS MEAN MONTHLY SOLAR RADIATION VALUES IN
C    LANGLEYS PER DAY.
C
      WRITE(6,60)
      WRITE(6,70)(RADIM(I),I=1,12)
 115    DO 120 I=1,NDA
        RAD(I)=COMPUT(R0,R1,R2,I,NDA)
  120 CONTINUE
  130 IF(KSET.GT.0) GO TO 180
C
C    KSET=1 IF ONLY ONE SET OF LEAF AREA INDICES IS
C    IS TO BE USED FOR ALL YEARS OF SIMULATION.
C
```

```
      IF(IO1.EQ.1.OR.IO3.EQ.1.OR.IO5.EQ.1)GO TO 145
      WRITE(6,140)
  140 FORMAT(1H /27X,21HLEAF AREA INDEX TABLE//
     1 30X,4HDATE,8X,3HLAI/30X,4H----,7X,4H----)
C
C    READS LEAF AREA INDICES.
C
 145     DO 170 I=1,13
      READ(14,150)LYEAR,LDAY13(I),XLAI13(I)
  150 FORMAT(I5,I8,F8.2)
C
C     PRINTS LEAF AREA INDICES.
C
      IF(IO1.EQ.1.OR.IO3.EQ.1.OR.IO5.EQ.1)GO TO 170
      WRITE(6,160) LDAY13(I),XLAI13(I)
  160 FORMAT(1H ,30X,I3,6X,F5.2)
  170 CONTINUE
C
C     READS VEGETATION TYPE WHEN ONLY ONE SET OF LEAF AREA
C     INDICES IS USED FOR ALL YEARS OF SIMULATION.
C
      READ(14,300)KVEG
  300 FORMAT(I3)
      IF(KVEG.LT.1.OR.KVEG.GT.7) GO TO 175
C
C     PRINTS VEGETATION TYPE USED FOR CLIMATOLOGIC
C     INPUT WHEN DEFAULT OPTION WAS USED.
C
      IF(IO1.EQ.1.OR.IO3.EQ.1.OR.IO5.EQ.1)GO TO 175
      IF(KVEG.EQ.1)WRITE(6,310)
  310 FORMAT(1H /32X,11HBARE GROUND/)
      IF(KVEG.EQ.2)WRITE(6,320)
  320 FORMAT(1H /30X,15HEXCELLENT GRASS/)
      IF(KVEG.EQ.3)WRITE(6,330)
  330 FORMAT(1H /32X,10HGOOD GRASS/)
      IF(KVEG.EQ.4)WRITE(6,340)
  340 FORMAT(1H /32X,10HFAIR GRASS/)
      IF(KVEG.EQ.5)WRITE(6,350)
  350 FORMAT(1H /32X,10HPOOR GRASS/)
      IF(KVEG.EQ.6)WRITE(6,360)
  360 FORMAT(1H /31X,13HGOOD ROW CROP/)
      IF(KVEG.EQ.7)WRITE(6,370)
  370 FORMAT(1H /31X,13HPOOR ROW CROP/)
  175 CONTINUE


      IF(LYEAR.LE.0)KSET=1
      IF(LYEAR.LE.0) REWIND 14
C
C     CALLS SUBROUTINE DLAIS TO COMPUTE POTENTIAL
```

```
150.      C     DAILY CHANGES IN THE LEAF AREA INDEX.
151.      C
152.            CALL DLAIS(DLAI,XLAI1)
153.
154.        180 IF(LSET.GT.0) GO TO 210
155.      C
156.      C     LSET=1 IF ONLY ONE WINTER COVER FACTOR IS
157.      C     USED FOR ALL YEARS OF SIMULATION.
158.      C
159.            READ(15,190) LYEAR,GR
160.        190 FORMAT(I5,F8.2)
161.      C
162.      C     READS AND PRINTS WINTER COVER FACTOR.
163.      C
164.            IF(LYEAR.LE.0)LSET=1
165.            IF(LYEAR.LE.0) REWIND 15
166.            IF(IO1.EQ.1.OR.IO3.EQ.1.OR.IO5.EQ.1)GO TO 210
167.            WRITE(6,200)GR
168.        200 FORMAT(1H ,23X,21HWINTER COVER FACTOR =,F8.2)
169.      C
170.      C     IF NEW TEMPERATURE OR SOLAR RADIATION VALUES ARE READ,
171.      C     MSET=1 AND NEW DAILY POTENTIAL EVAPOTRANSPIRATION
172.      C     VALUES MUST BE COMPUTED.
173.      C
174.
175.        210 IF(ISET.LE.0.OR.JSET.LE.0)MSET=1
176.            RETURN
177.            END
178.      C
179.      C        ********************** LEAP **********************
180.      C
181.      C
182.      C     INTEGER FUNCTION SUBPROGRAM LEAP DETERMINES
183.      C     WHETHER A YEAR IS A LEAP YEAR.
184.      C
185.            INTEGER FUNCTION LEAP(YEAR,FLAG)
186.            INTEGER YEAR,FLAG
187.      C
188.      C     IF DIVISIBLE BY FOUR, YEAR IS A LEAP YEAR AND FLAG IS SET
189.      C     TO 0; ELSE, YEAR IS NOT A LEAP YEAR AND FLAG=1.
190.      C
191.            IF(MOD(YEAR,4).EQ.0) GO TO 10
192.            LEAP=365
193.            FLAG=1
194.            RETURN
195.
196.         10 CONTINUE
197.            LEAP=366
198.            FLAG=0
199.            RETURN
```

```
200.          END
```

```
C
C      ************************ READSD ************************
C
C
C    SUBROUTINE READSD READS DATA FILE TAPE 5 FOR SOIL
C    CHARACTERISTICS AND DESIGN INFORMATION.
C
      SUBROUTINE READSD(KVEG,ISAND)

      COMMON/BLK2/PORO(9),FC(9),WP(9),CON(9),RC(9)
      COMMON/BLK4/LAYER(10),THICK(9),LAY

      COMMON/BLK5/TAREA,LINER,FLEAK,FRUNOF,CN2
      COMMON/BLK3/SLOPE(9),XLEN3(9)
      DIMENSION ITITLE(3,40)

      REWIND 5
       WRITE(6,5)
    5  FORMAT(1H ,6(/),1H ,70(1H*)/1H ,70(1H*)//)
      DO 20 J=1,3
        READ(5,15)(ITITLE(J,I),I=1,40)
   15   FORMAT(80A1)
        WRITE(6,10)(ITITLE(J,I),I=1,40)
   10   FORMAT(1H ,60A1)
   20 CONTINUE
       WRITE(6,25)
   25  FORMAT(1H //1H ,70(1H*)/1H ,70(1H*)//////)

      READ(5,30)LAY,LINER,FLEAK,FRUNOF,CN2
   30 FORMAT(2I2,3F12.6)

      READ(5,40)(THICK(J),J=1,9)
   40 FORMAT(9F7.2)

      READ(5,50)(PORO(J),J=1,9)
   50 FORMAT(9F7.4)

      READ(5,50)(FC(J),J=1,9)
      READ(5,50)(WP(J),J=1,9)

      READ(5,60)(CON(J),J=1,9)
   60 FORMAT(9F7.3)

      READ(5,70)(RC(J),J=1,5)
   70 FORMAT(5F13.8)

      READ(5,80)(RC(J),J=6,9)
   80 FORMAT(4F13.8)
```

```
      READ(5,90)TAREA
   90 FORMAT(F12.0)

      READ(5,100)(LAYER(J),J=1,9)
  100 FORMAT(9I7)

      READ(5,40)(SLOPE(J),J=1,9)

      READ(5,110)(XLENG(J),J=1,9)
  110 FORMAT(9F7.1)

      READ(5,150) KVEG,ISAND
  150 FORMAT(2I3)
      REWIND 5
      RETURN
      END
```

```
C
C      ************************ RUNOFF ************************
C
C
C    SUBROUTINE RUNOFF
C
      SUBROUTINE RUNOFF(WF,RAIN,RUN,SMX)

      COMMON/BLK7/STHICK(16),UL(16)FCUL(16)WPUL(16),SWUL(16),RCUL(16)

      COMMON/BLK5/TAREA,LINER,FLEAK,FRUNOF,CN2

      DIMENSION WF(7)

      WTSM=0.0
C
C    COMPUTES DEPTH-WEIGHTED EFFECTIVE SOIL WATER CONTENT
C    IN VOL/VOL.
C
      DO 10 I=1,7

       SW=SWUL(I)
       IF(SWUL(I).GT.UL(I))SW=UL(I)
          WTSM=WTSM+(WF(I)*(SW-WPUL(I))/(UL(I)-WPUL(I)))

   10 CONTINUE
C
C    COMPUTES STORAGE RETENTION PARAMTER.
C
      S=SMX*(1.0-WTSM)
C
C    COMPUTES INITIAL ABSTRACTION.
C
      AB=0.2*S
      IF(S.LT.0.0)S=0

      IF(RAIN.LT.AB) GO TO 20
C
C    COMPUTES RUNOFF.
C

      RUN=((RAIN-AB)**2)/(RAIN+0.8*S)
      RUN=RUN*FRUNOF

      RETURN

   20 RUN=0.0
```

```
50.          RETURN
51.          END
```

```
C
C      ******************** SCAN ************************
C
C
C    SUBROUTINE SCAN IS USED TO READ ALL UNFORMATTED
C    NUMERIC INPUT FROM THE USER. 76 COLUMNS MAY BE USED
C    FOR A LINE OF INPUT CONTAINING UP TO 10 VALUES.
C
      SUBROUTINE SCAN (NO,VALUE,M7,KLM)
      DIMENSION VALUE(10),KLM(76),NUM(10)
      DATA IPOINT,IPLUS,MINUS/1H.,1H+,1H-/
      DATA NUM/1H0,1H1,1H2,1H3,1H4,1H5,1H6,1H7,1H8,1H9/
      K7=M7+1
      DO 1 I=1,10
1      VALUE(I)=0.
      NCOL=1
      N=1
      KPT=0
2      IF(KLM(NCOL).NE.MINUS)GO TO 4
3      SGN=-1.
      GO TO 5
4      IF(KLM(NCOL).NE.IPLUS)GO TO 6
7      SGN=1.
5      VALUE(N)=0.
      GO TO 8
6      IF(KLM(NCOL).NE.IPOINT)GO TO 9
10     KPT=1
      GO TO 7
9      K=0
      ICOMP=NUM(1)
11     IF(KLM(NCOL).EQ.ICOMP) GO TO 13
12     K=K+1
      ICOMP=NUM(K+1)
      IF(K-10)11,14,14
14     NCOL=NCOL+1
24     IF(NCOL-K7)2,16,16
16     NO=N-1
      RETURN
13     SGN=1.
      VALUE(N)=K
8      NCOL=NCOL+1
      IF(NCOL-K7)17,18,18
17     IF(KLM(NCOL).NE.IPOINT)GO TO 20
19     KPT=1
      GO TO 8
20     K=0
      ICOMP=NUM(1)
21     IF(KLM(NCOL).EQ.ICOMP)GO TO 23
```

```
50.      22    K=K+1
51.           ICOMP=NUM(K+1)
52.           IF(K-10)21,18,18
53.      18    VALUE(N)=VALUE(N)*SGN
54.           N=N+1
55.           KPT=0
56.           GO TO 24
57.      23    IF(KPT)25,26,25
58.      26    VALUE(N)=VALUE(N)*10.+K
59.           GO TO 8
60.      25    VALUE(N)=VALUE(N)+K*10.**(-KPT)
61.           KPT=KPT+1
62.           GO TO 8
63.           END
```

```
C
C      ************************ SDCHK ************************
C
C    SUBROUTINE SDCHK IS USED TO CHECK AND CORRECT SOIL
C    CHARACTERTICS AND DESIGN INFORMATION FOR MANUAL INPUT.
C

      SUBROUTINE SDCHK
      DIMENSION ITITLE(3,40),THICK(9),PORO(9),FC(9),WP(9),
     1 RC(9),LAYER(10),SLOPE(9),XLENG(9),VALUE(10),KLM(74)
     2 ,CON(9)

    5 REWIND 5
      INEW=0
      WRITE(6,10)
   10 FORMAT(1H /1H ,5H10.1 ,29HTHE DESIGN AND SOIL DATA ARE://1X,
     1  10H(THE LAST ,
     1 48HNUMBER OF EACH LINE OF DATA IS THE LINE NUMBER.)//)
C
C    READS DATA FILE TAPE 5 AND PRINTS THE VALUES.
C
      DO 40 J=1,3
      READ(5,20)(ITITLE(J,I),I=1,40)
   20 FORMAT(60A1)
      WRITE(6,30)(ITITLE(J,I),I=1,40)
   30 FORMAT(1H /1H ,6HTITLE:/1X,60A1)
   40 CONTINUE

      READ(5,50)LAY,LINER,FLEAK,FRUNOF,CN2,JCOUNT
   50 FORMAT(2I2,3F12.6,I7)
      WRITE(6,60)LAY,LINER,FLEAK,FRUNOF,CN2,JCOUNT
   60 FORMAT(1H /1H ,40H# OF LAYERS, # OF LINERS, LINER LEAKAGE ,
     1 25HFRACTION, RUNOFF FRACTION/1X,
     2 26HFOR OPEN SITES, AND CN-II:/1X,2I2,3F12.6,I7)

      READ(5,70)(THICK(J),J=1,9),JCOUNT
   70 FORMAT(9F7.2,I7)
      WRITE(6,80)(THICK(J),J=1,9),JCOUNT
   80 FORMAT(1H /1H ,12HTHICKNESSES:/1X,9F7.2,I7)

      READ(5,90)(PORO(J),J=1,9),JCOUNT
   90 FORMAT(9F7.4,I7)
      WRITE(6,100)(PORO(J),J=1,9),JCOUNT
  100 FORMAT(1H /1H ,11HPOROSITIES:/1X,9F7.4,I7)

      READ(5,90)(FC(J),J=1,9),JCOUNT
      WRITE(6,110)(FC(J),J=1,9),JCOUNT
  110 FORMAT(1H /1H ,17HFIELD CAPACITIES:/1X,9F7.4,I7)

```

```
50.          READ(5,90)(WP(J),J=1,9),JCOUNT
51.          WRITE(6,120)(WP(J),J=1,9),JCOUNT
52.      120 FORMAT(1H /1H ,15HWILTING POINTS:/1X,9F7.4,I7)
53.
54.          READ(5,130)(CON(J),J=1,9),JCOUNT
55.      130 FORMAT(9F7.3,I7)
56.          WRITE(6,140)(CON(J),J=1,9),JCOUNT
57.      140 FORMAT(1H /1H ,25HEVAPORATION COEFFICIENTS:/1X,9F7.3,I7)
58.
59.          READ(5,150)(RC(J),J=1,5),JCOUNT
60.      150 FORMAT(5F13.8,I7)
61.          WRITE(6,160)(RC(J),J=1,5),JCOUNT
62.      160 FORMAT(1H /1H ,25HHYDRAULIC CONDUCTIVITIES:/1X,5F13.8,I6)
63.          READ(5,170)(RC(J),J=6,9),JCOUNT
64.      170 FORMAT(4F13.8,I7)
65.          WRITE(6,175)(RC(J),J=6,9),JCOUNT
66.     175  FORMAT(1H ,4F13.8,I7)
67.
68.          READ(5,180) TAREA,JCOUNT
69.      180 FORMAT(F12.0,I7)
70.          WRITE(6,190) TAREA,JCOUNT
71.      190 FORMAT(1H /1H ,13HSURFACE AREA:/1X,F12.0,I7)
72.
73.          READ(5,200)(LAYER(J),J=1,9),JCOUNT
74.      200 FORMAT(10I7)
75.          WRITE(6,210)(LAYER(J),J=1,9),JCOUNT
76.      210 FORMAT(1H /1H ,12HLAYER TYPES:/1X,10I7)
77.
78.
79.          READ(5,70)(SLOPE(J),J=1,9),JCOUNT
80.          WRITE(6,220)(SLOPE(J),J=1,9),JCOUNT
81.      220 FORMAT(1H /1H ,13HLAYER SLOPES:/1X,9F7.2,I7)
82.
83.          READ(5,230)(XLENG(J),J=1,9),JCOUNT
84.      230 FORMAT(9F7.1,I7)
85.          WRITE(6,240)(XLENG(J),J=1,9),JCOUNT
86.      240 FORMAT(1H /1H ,23HLAYER DRAINAGE LENGTHS:/1X,9F7.1,I7)
87.
88.          READ(5,245)KVEG,ISAND
89.      245 FORMAT(2I3)
90.
91.
92.          REWIND 5
93.
94.      250 WRITE(6,260)
95.      260 FORMAT(1H /1H ,5H10.2 ,32HDO YOU WANT TO CHANGE ANY LINES/
96.         1 1X,16HENTER YES OR NO./)
97.          CALL ANSWER(IANS)
98.          IF(IANS.EQ.1) GO TO 340
99.          IF(INEW.EQ.1) GO TO 269
```

```
100.          WRITE(6,261)
101.      261 FORMAT(1H /1H ,5H10.3 ,26HDO YOU WANT TO CHANGE THE ,
102.         1  6HTITLE/1X,16HENTER YES OR NO./)
103.          CALL ANSWER(IANS)
104.          IF(IANS.EQ.1) GO TO 269
105.          WRITE(6,262)
106.      262 FORMAT(1H /6H 10.4 ,23H ENTER TITLE ON LINE 1,/
107.         1  45H ENTER LOCATION OF SOLID WASTE SITE ON LINE 2/
108.         2  34H AND ENTER TODAY'S DATE ON LINE 3./)
109.          DO 264 J=1,3
110.          READ(10,20)(ITITLE(J,I),I=1,40)
111.      264 CONTINUE
112.          INEW=1
113.          GO TO 250
114.     269  INEW=1
115.          WRITE(6,270)
116.      270 FORMAT(1H /1H ,5H10.5 ,29HENTER THE NUMBER OF THE LINE./)
117.          READ(10,280)(KLM(J),J=1,74)
118.      280 FORMAT(74A1)
119.          CALL SCAN(NO,VALUE,74,KLM)
120.          JCOUNT=VALUE(1)
121.          IF(JCOUNT.LT.4.OR.JCOUNT.GT.15)GO TO 250
122.     C
123.     C    READS THE NUMBER OF THE LINE TO BE CHANGED.
124.     C
125.     310      WRITE(6,320)JCOUNT
126.      320 FORMAT(1H /1H ,5H10.6 ,30HENTER THE DATA VALUES FOR LINE,
127.         1 I3,1H./1X,29HDO NOT ENTER THE LINE NUMBER.//)
128.     C
129.     C    READS THE VALUES OF THE LINE.
130.     C
131.          READ(10,280)(KLM(J),J=1,74)
132.          CALL SCAN(NO,VALUE,74,KLM)
133.
134.          IF(JCOUNT.EQ.4) GO TO 321
135.          IF(JCOUNT.EQ.5) GO TO 322
136.          IF(JCOUNT.EQ.6) GO TO 324
137.          IF(JCOUNT.EQ.7) GO TO 326
138.          IF(JCOUNT.EQ.8) GO TO 328
139.          IF(JCOUNT.EQ.9) GO TO 330
140.          IF(JCOUNT.EQ.10) GO TO 332
141.          IF(JCOUNT.EQ.11) GO TO 334
142.          IF(JCOUNT.EQ.12) GO TO 336
143.          IF(JCOUNT.EQ.13) GO TO 337
144.          IF(JCOUNT.EQ.14) GO TO 339
145.          IF(JCOUNT.EQ.15) GO TO 342
146.     C
147.     C    ASSIGNS THE NEW VALUE  TO THE VARIABLE READ.
148.     C
149.          GO TO 250
```

```
150.        321 LAY=VALUE(1)
151.            LINER=VALUE(2)
152.            FLEAK=VALUE(3)
153.            FRUNOF=VALUE(4)
154.            CN2=VALUE(5)
155.
156.            WRITE(6,311)
157.        311 FORMAT(1H /6H 10.7 ,39HIT IS RECOMMENDED THAT YOU REENTER ALL ,
158.           19HSOIL DATA/45H IF YOU WANT TO CHANGE THE NUMBER OF LAYERS; ,
159.           2  10HOTHERWISE,/40H YOU MUST CHANGE LINES 5 THROUGH 11 AND ,
160.           3  14H13 THROUGH 15.)
161.
162.            GO TO 250
163.
164.        322 DO 323 J=1,9
165.            THICK(J)=VALUE(J)
166.        323 CONTINUE
167.            GO TO 250
168.        324 DO 325 J=1,9
169.            PORO(J)=VALUE(J)
170.        325 CONTINUE
171.            GO TO 250
172.        326 DO 327 J=1,9
173.            FC(J)=VALUE(J)
174.        327 CONTINUE
175.            GO TO 250
176.        328 DO 329 J=1,9
177.            WP(J)=VALUE(J)
178.        329 CONTINUE
179.            GO TO 250
180.        330 DO 331 J=1,9
181.            CON(J)=VALUE(J)
182.        331 CONTINUE
183.            GO TO 250
184.        332 DO 333 J=1,5
185.            RC(J)=VALUE(J)
186.        333 CONTINUE
187.            GO TO 250
188.        334 DO 335 J=6,9
189.            K=J-5
190.            RC(J)=VALUE(K)
191.        335 CONTINUE
192.             GO TO 250
193.      336   TAREA=VALUE(1)
194.            GO TO 250
195.        337 DO 338 J=1,9
196.            LAYER(J)=VALUE(J)
197.        338 CONTINUE
198.
199.            WRITE(6,312)
```

```
  312 FORMAT(1H /6H 10.8 ,33HYOU MAY ALSO NEED TO CHANGE LINES,
     1  14H 4, 14 AND 15./1X,24HIF YOU CHANGE THIS LINE.)

      GO TO 250
  339 DO 341 J=1,9
      SLOPE(J)=VALUE(J)
  341 CONTINUE
      GO TO 250
  342 DO 343 J=1,9
      XLENG(J)=VALUE(J)
  343 CONTINUE
      GO TO 250
C
C    WRITES THE NEW DATA FILE WITH THE CORRECTED VALUES.
C
  340 REWIND 5
      IF(INEW.EQ.0) GO TO 360
      DO 345 J=1,3
      WRITE(5,20)(ITITLE(J,I),I=1,40)
  345 CONTINUE
      JCOUNT=4
      WRITE(5,50)LAY,LINER,FLEAK,FRUNOF,CN2,JCOUNT
      JCOUNT=5
      WRITE(5,70)(THICK(J),J=1,9),JCOUNT
      JCOUNT=6
      WRITE(5,90)(PORO(J),J=1,9),JCOUNT
      JCOUNT=7
      WRITE(5,90)(FC(J),J=1,9),JCOUNT
      JCOUNT=8
      WRITE(5,90)(WP(J),J=1,9),JCOUNT
      JCOUNT=9
      WRITE(5,130)(CON(J),J=1,9),JCOUNT
      JCOUNT=10
      WRITE(5,150)(RC(J),J=1,5),JCOUNT
      JCOUNT=11
      WRITE(5,170)(RC(J),J=6,9),JCOUNT
      JCOUNT=12
      WRITE(5,180) TAREA,JCOUNT
      JCOUNT=13
      WRITE(5,200)(LAYER(J),J=1,9),JCOUNT
      JCOUNT=14
      WRITE(5,70)(SLOPE(J),J=1,9),JCOUNT
      JCOUNT=15
      WRITE(5,230)(XLENG(J),J=1,9),JCOUNT
      WRITE(5,245)KVEG,ISAND
      REWIND 5
      WRITE(6,350)
  350 FORMAT(1H /6H 10.9 ,33HDO YOU WANT TO CHECK THE DATA SET,
     1 7H AGAIN/1X,16HENTER YES OR NO.//)
      CALL ANSWER(IANS)
```

```
      IF(IANS.EQ.0)GO TO 5
  360 RETURN
      END
```

```
C
C      ************************* SEGMNT *************************
C
C
C    SUBROUTINE SEGMNT ASSIGNS THICKNESS, AND SOIL
C    CHARACTERTICS TO THE SEGMENTS.
C
      SUBROUTINE SEGMNT

      COMMON/BLK2/PORO(9),FC(9),WP(9),CON(9),RC(9)

      COMMON/BLK4/LAYER(10),THICK(9),LAY
      COMMON/BLK6/NSEG1,NSEG2,NSEG3,VDEPTH,RDEPTH
      COMMON/BLK7/STHICK(16),UL(16),FCUL(16),WPUL(16),
     1 SWUL(16),RCUL(16)
      COMMON/BLK9/CONUL(16)
      DIMENSION RCULS(16)
C
C     INITIALIZES THE NUMBER OF SEGMENTS IN EACH SUBPROFILE AND
C     SETS THE EVAPORATIVE DEPTH EQUAL TO TWICE THE ROOT ZONE
C     DEPTH.
C
      NSEG1=0
      NSEG2=0
      NSEG3=0
      EDEPTH=RDEPTH

      THICK1=0.0

      DO 5 J=1,16
    5   STHICK(J)=0.0
C
C    SETS THE EVAPOTATIVE DEPTH EQUAL TO THE DEPTH TO THE
C    THE TOP OF THE TOP BARRIER LAYER IF LESS THAN TWICE THE
C    ROOT ZONE DEPTH.
C
      DO 10 J=1,LAY
        LAY1=J
      IF(J.EQ.1) GO TO 15
        IF(LAYER(J).EQ.3.OR.LAYER(J).EQ.5) GO TO 20
   15   THICK1=THICK1+THICK(J)
        IF(THICK1.GT.EDEPTH)NSEG1=NSEG1+1
   10 CONTINUE
C
C    SETS THE NUMBER OF SEGMENTS IN THE TOP SUBPROFILE EQUAL
C    TO 7 PLUS THE NUMBER OF LAYERS BELOW THE EVAPORATIVE
C    DEPTH AND ABOVE THE BOTTOM OF THE TOP BARRIER LAYER.
C
```

```
50.          NSEG1=NSEG1-1
51.       20 NSEG1=NSEG1+8
52.          VDEPTH=THICK1
53.          IF(VDEPTH.GT.EDEPTH)VDEPTH=EDEPTH
54.          IF(LAY1.GE.LAY) GO TO 60
55.          LAY2=LAY1+1
56.     C
57.     C    SETS THE NUMBER OF SEGMNTS IN THE SECOND SUBPROFILE
58.     C    EQUAL TO THE NUMBER OF LAYERS BETWEEN THE BOTTOM OF THE
59.     C    EVAPOTATIVE DEPTH AND ABOVE THE BOTTOM OF THE BARRIER LAYER.
60.     C
61.          DO 30 J=LAY2,LAY
62.            NSEG2=NSEG2+1
63.            IF(LAYER(J).EQ.3.OR.LAYER(J).EQ.5) GO TO 40
64.       30 CONTINUE
65.
66.       40 LAYS=LAY1+NSEG2
67.          IF(LAYS.GE.LAY) GO TO 60
68.          LAY3=LAYS+1
69.     C
70.     C    SETS THE NUMBER OF SEGMENTS IN THE THRID SUBPROFILE EQUAL
71.     C    TO THE NUMBER OF LAYERS REMAINING.
72.     C
73.          DO 50 J=LAY3,LAY
74.       50  NSEG3=NSEG3+1
75.     C
76.     C    ASSIGNS THE THICHNESS OF THE TOP SEVEN SEGMENTS.
77.     C
78.       60 STHICK(1)=VDEPTH/36.0
79.          STHICK(2)=5.0*VDEPTH/36.0
80.          DO 70 J=3,7
81.       70 STHICK(J)=VDEPTH/6.0
82.
83.          IF(NSEG1.EQ.7) GO TO 110
84.          THICK1=0.0
85.     C
86.     C    ASSIGNS THE THICHNESS OF THE REMAINING SEGMENTS IN THE
87.     C    TOP SUBPROFILE.
88.     C
89.          DO 80 J=1,LAY1
90.            THICK1=THICK1+THICK(J)
91.            IF(THICK1.LE.VDEPTH) GO TO 80
92.             STHICK(8)=THICK1-VDEPTH
93.             LAY1M1=J
94.             IF(J.EQ.LAY1) GO TO 110
95.             GO TO 90
96.       80 CONTINUE
97.          STHICK(8)=THICK(LAY1)
98.          GO TO 110
99.       90 IF(NSEG1.LT.9)GO TO 110
```

```
      DO 100 J=9,NSEG1
        LAY1M1=LAY1M1+1
  100 STHICK(J)=THICK(LAY1M1)
  110 IF(LAY1.GE.LAY) GO TO 140
      NSEG2B=NSEG1+1
      NSEG2E=NSEG1+NSEG2
      LAY2B=LAY1
C
C    ASSIGNS THE THICHNESS OF THE SEGMNTS IN THE SECOND SUBPRO-
C    PROFILE.
C
      DO 120 J=NSEG2B, NSEG2E
        LAY2B=LAY2B+1
  120 STHICK(J)=THICK(LAY2B)

      LAY3B=LAY1+NSEG2
      IF(LAY3B.GE.LAY) GO TO 140
       NSEG3B=NSEG2E+1
      NSEG3E=NSEG2E+NSEG3
C
C    ASSIGNS THICKNESS TO THE SEGMNTS OF THE THRID SUBPROFILE.
C
      DO 130 J=NSEG3B,NSEG3E
        LAY3B=LAY3B+1
  130 STHICK(J)=THICK(LAY3B)

  140 DEPSEG=0.0
      DEPTHS=0.0
      DEPTHL=THICK(1)

      K=1
      NSEG3E=NSEG1+NSEG2+NSEG3
C
C    COMPUTES THE EFFECTIVE SOIL CHARACTERISTICS OF THE SEGMENTS,
C    AVERAGED BY THICKNESS OF A SEGMENT IN MULTIPLE LAYERS.
C
      DO 170 J=1,NSEG3E
        UL(J)=0.0
        WPUL(J)=0.0
        FCUL(J)=0.0
        CONUL(J)=0.0
      RCULS(J)=0.0
        DEPTHS=DEPTHS+STHICK(J)
  150     IF(DEPTHS.LE.DEPTHL) GO TO 160
          DSEG=DEPTHL-DEPSEG
      DEPSEG=DEPTHL
          UL(J)=PORO(K)*DSEG+UL(J)
          FCUL(J)=FC(K)*DSEG+FCUL(J)
          WPUL(J)=WP(K)*DSEG+WPUL(J)
          CONUL(J)=CON(K)*DSEG+CONUL(J)
```

```
150.                RCULS(J)=RC(K)*DSEG+RCULS(J)
151.                K=K+1
152.                DEPTHL=DEPTHL+THICK(K)
153.                GO TO 150
154.        160   DSEG=DEPTHS-DEPSEG
155.              UL(J)=PORO(K)*DSEG+UL(J)
156.              FCUL(J)=FC(K)*DSEG+FCUL(J)
157.              WPUL(J)=WP(K)*DSEG+WPUL(J)
158.              CONUL(J)=CON(K)*DSEG+CONUL(J)
159.              RCULS(J)=RC(K)*DSEG+RCULS(J)
160.              DEPSEG=DEPTHS
161.        170 CONTINUE
162.      C
163.      C    CONVERTS THE HYDRAULIC CONDUCTIVITY FROM IN/HR TO IN/DAY.
164.      C
165.            DO 175 J=1,NSEG3E
166.        175 RCUL(J)=(RCULS(J)*24.)/STHICK(J)
167.      C
168.      C    INITIALIZES THE SOIL WATER CONTENT OF THE SEGMENTS.
169.      C
170.            DO 190 J=1,NSEG3E
171.              IF(J.GT.7) GO TO 180
172.              SWUL(J)=(FCUL(J)+WPUL(J))/2.0
173.              GO TO 190
174.        180   SWUL(J)=FCUL(J)
175.        190 CONTINUE
176.
177.            RETURN
178.            END
```

```
C
C       ************************ SIMULA ************************
C
C
C     SUBROUTINE SIMULA DIRECTS THE RUNNING OF THE SIMULATION
C     AND PRINTING OF OUTPUT, AND PERFORMS THE ACCOUNTING ON THE
C     RESULTS.
C
      SUBROUTINE SIMULA

      COMMON/BLK1/KCDATA,KSDATA,KFLAG,IFLAG,KVEG,
     1 IO1,IO2,IO3,IO4,IO5
      COMMON/BLK4/LAYER(10),THICK(9),LAY

      COMMON/BLK5/TAREA,LINER,FLEAK,FRUNOF,CN2

      COMMON/BLK6/NSEG1,NSEG2,NSEG3,VDEPTH,RDEPTH

      COMMON/BLK7/STHICK(16),UL(16),FCUL(16),WPUL(16),
     1        SWUL(16),RCUL(16)

      COMMON/BLK8/PRE(370),TMPF(366),RAD(366),DLAI(367),GR,XLAI1

      COMMON/BLK11/ETO(366),XLAI,STAGE1,CONA,
     1        RAIN,RUN,IDA

      COMMON/BLK12/PRC1M(240),PRC2M(240),PRC3M(240),
     1   DRN1M(240),DRN2M(240),DRN3M(240),RUNM(240),
     2   PREM(240),ETM(240)

      COMMON/BLK13/PRC1A(20),PRC2A(20),PRC3A(20),DRN1A(20),
     1       DRN2A(20),DRN3A(20),RUNA(20),PREA(20),ETA(20),
     2       JYEAR(20),BAL(20),OSWULE,PSWULE

      COMMON/BLK14/PPRC1,PPRC2,PPRC3,PDRN1,PDRN2,PDRN3,PRUN,
     1       PPRE,PSW,DSW,PHED1,PHED2,PHED3,PSNO


      COMMON/BLK15/PRC1,PRC2,PRC3,DRN1,DRN2,DRN3,
     1  SW,ETT,NSTAR,HED1,HED2,HED3
     2  ,IYR

      DIMENSION ET(16),VALUE(10),KLM(74),ISTAR(2),WF(7),BALY(16)
     1 ,BALT(16)

      DATA ISTAR/1H*,1H /

      DATA WF/0.111,0.397,0.254,0.127,0.063,0.032,0.016/

```

```
      REWIND 4

      DO 20 I=1,20
      READ(4,10,END=30)
10    FORMAT(36(/))
      KKOUNT=I
20    CONTINUE
C
C    LMYR IS THE NUNBER OF YEARS OF SIMULATION.
C
30    WRITE(6,40) KKOUNT
      REWIND 4
40    FORMAT(1H /5H11.1 ,37HHOW MANY YEARS OF OUTPUT DO YOU WANT/
     1 1X,14H(BETWEEN 2 AND,I3,20H YEARS MAY BE USED.))
      READ(10,50) (KLM(I),I=1,74)
50    FORMAT(74A1)
      CALL SCAN(NO,VALUE,74,KLM)
      LMYR=VALUE(1)
      IF(LMYR.LE.1) LMYR=2
      IF(LMYR.GT.KKOUNT) LMYR=KKOUNT
      IDAILY=0
      IMONTH=0
      IF(IO2.EQ.1) GO TO 57
C
C    IDAILY=1 IF DAILY OUTPUT IS DESIRED.
C
      WRITE(6,53)
   53 FORMAT(1H /1H ,5H11.2 ,27HDO YOU WANT DAILY OUTPUT  ,
     1 /1X,16HENTER YES OR NO./)
      CALL ANSWER(IANS)
      IF(IANS.EQ.0)IDAILY=1

      IMONTH=0
      WRITE(6,56)
   56 FORMAT(1H /1H ,5H11.3 ,29HDO YOU WANT MONTHLY TOTALS  ,/
     1 1X,16HENTER YES OR NO./)
      CALL ANSWER(IANS)
      IF(IANS.EQ.0)IMONTH=1
C
C    IMONTH=1 IF MONTHLY OUTPUT IS DESIRED.
C

  57    REWIND 16
C
C    READS ROOT ZONE DEPTH TO BE USED FOR DETERMINING
C    SEGMENT THICKNESSES.
C
      READ(16,58)RDEPTH
  58  FORMAT(F8.2)
C
```

```
      REWIND 16
C    READS SOIL CHARACTERISTICS AND DESIGN INFORMATION.
C
      CALL READSD(KVEG,ISAND)
C
C    ASSIGNS THICKNESSES AND SOIL CHARACTERISTICS TO SEGMENTS.
C
      CALL SEGMNT
C
C    COMPUTES MAXIMUM STORAGE RETENTION PARMETER.
C
      C2=CN2*CN2
      C3=CN2*C2
      CN1= -16.911 + 1.3481*CN2 - 0.013793*C2 +
     1          0.00011772*C3
      SMX=(1000./CN1)-10.0

      IMO=0
      ULE=0.0
      FCULE=0.0
      WPULE=0.0
C
C    COMPUTES SOIL CHARACTERISTICS OF THE EVAPORATIVE ZONE.
C
      DO 60 J=1,7
      ULE=ULE+UL(J)
      FCULE=FCULE+FCUL(J)
      WPULE=WPULE+WPUL(J)
   60 CONTINUE
C
C    CRITS IS THE LOWEST SOIL WATER CONTENT IN INCHES THAT
C    PERMITS PLANT GROWTH.
C
      CRITS=WPULE+0.1*(FCULE-WPULE)
C
C    INITIALIZES ACCOUNTING VARIABLES.
C
      CALL ETCOEF(WF,CONA,STAGE1,STHICK)

      DO 70 I=1,240
      PRC1M(I)=0.0
      PRC2M(I)=0.0
      PRC3M(I)=0.0
      DRN1M(I)=0.0
      DRN2M(I)=0.0
      DRN3M(I)=0.0
      RUNM(I)=0.0
      PREM(I)=0.0
      ETM(I)=0.0
   70 CONTINUE
```

```
150.
151.            DO 80 I=1,20
152.            PRC1A(I)=0.0
153.            PRC2A(I)=0.0
154.            PRC3A(I)=0.0
155.            DRN1A(I)=0.0
156.            DRN2A(I)=0.0
157.            DRN3A(I)=0.0
158.            RUNA(I)=0.0
159.            PREA(I)=0.0
160.            ETA(I)=0.0
161.            BAL(I)=0.0
162.         80 CONTINUE
163.
164.            PPRC1=0.0
165.            PPRC2=0.0
166.            PPRC3=0.0
167.            PDRN1=0.0
168.            PDRN2=0.0
169.            PDRN3=0.0
170.            PRUN=0.0
171.            PPRE=0.0
172.            PSND=0.0
173.            PHED1=0.0
174.            PHED2=0.0
175.            PHED3=0.0
176.
177.            SWULE=0.0
178.            DO 90 J=1,7
179.            SWULE = SWULE +SWUL(J)
180.      90    CONTINUE
181.            OSWULE=0.0
182.            NSEG=NSEG1+NSEG2+NSEG3
183.            PSW = SWULE/VDEPTH
184.            DSW = SWULE/VDEPTH
185.            DO 100 J=1,NSEG
186.            OSWULE=OSWULE+SWUL(J)
187.      100   CONTINUE
188.
189.            YSWUL1=0.0
190.            DO 102 J=1,NSEG1
191.            YSWUL1=YSWUL1+SWUL(J)
192.        102 CONTINUE
193.            IF(NSEG2.EQ.0) GO TO 109
194.            NSEG2B=NSEG1+1
195.            NSEG2E=NSEG1+NSEG2
196.            YSWUL2=0.0
197.            DO 104 J=NSEG2B,NSEG2E
198.            YSWUL2=YSWUL2+SWUL(J)
199.        104 CONTINUE
```

```
      IF(NSEG3.EQ.0) GO TO 109
      NSEG3B=NSEG2E+1
      NSEG3E=NSEG2E+NSEG3
      YSWUL3=0.0
      DO 106 J=NSEG3B,NSEG3E
      YSWUL3=YSWUL3+SWUL(J)
  106 CONTINUE
  109 CONTINUE
      DO 110 J=1,16
      BALT(J)=0.0
      BALY(J)=0.0
      ET(J)=0.0
110   CONTINUE

      ISET=0
      JSET=0
      KSET=0
      LSET=0
      MSET=0
      SNO=0.0
      LFLAG1=0
      LFLAG2=0
      LFLAG3=0
      YSNO=0.0
      DRN1=0.0
      DRN2=0.0
      DRN3=0.0
      OLDSNO=0.0
      ES1T=0.0
      T=0.0
      ADDRUN=0.0
      EXWAT2=0.0
      EXWAT1=0.0
      QDRN3=0.0
      QDRN2=0.0
      QDRN1=0.0
      QPRCY3=0.0
      QPRCY2=0.0
      QPRCY1=0.0
      QLATY3=0.0
      QLATY2=0.0
      QLATY1=0.0

C
C    PRINTS SOIL CHARACTERISTICS AND DESIGN INFORMATION.
C
      IF(IO1.EQ.0.AND.IO3.EQ.0.AND.IO5.EQ.0)
     1 CALL OUTSD(KVEG,CONA,ULE,SWULE,RDEPTH,ISAND)
C
C    SETS CONTROLS FOR PRINTING OUTPUT.
```

```
250.      C
251.            CALL CNTRLD(IUNIT,IUNITT,IUNITB)
252.            REWIND 4
253.            REWIND 7
254.            REWIND 13
255.            REWIND 14
256.            REWIND 15
257.
258.      C
259.      C    START YEARLY LOOP FOR SIMULATION. IYR IS THE NUMBER
260.      C    OF THE YEAR.
261.      C
262.            DO  190   IYR=1,LMYR
263.            MO1=1
264.      C
265.      C    IMO IS THE NUMBER OF THE MONTH.
266.      C    MO1 IS THE NUMBER OF THE MONTH OF THE YEAR.
267.      C
268.            IMO=IMO+1
269.      C
270.      C    READS AND PRINTS CLIMATOLOGIC DATA FOR YEAR OF SIMULATION.
271.      C
272.            CALL READCD(NYEAR,ND,ISET,JSET,KSET,LSET,MSET,NT)
273.
274.            JYEAR(IYR)=NYEAR
275.            XLAI=XLAI1
276.
277.            IF(IYR.GT.1.AND.MSET.GT.0) GO TO 120
278.      C
279.      C    COMPUTES DAILY POTENTIAL EVAPOTRANSPIRATION VALUES FOR A
280.      C    YEAR OF SIMULATION.
281.      C
282.            CALL POTET(ETO)
283.      C
284.      C    START DAILY LOOP FOR SIMULATION.
285.      C    IDA IS THE DAY OF THE YEAR OF SIMULATION.
286.      C
287.      120   DO 160 IDA=1,ND
288.      C
289.      C    COMPUTES THE MONTH OF YEAR FOR THE DAY OF SIMULATION, MO
290.      C    COMPARES IT WITH YESTERDAY'S MONTH, MO1 AND INCREMENTS
291.      C    IMO IF DIFFERENT.
292.      C
293.            MO=MONTH(IDA,NT)
294.            IF(MO.NE.MO1) IMO=IMO+1
295.            MO1=MO
296.      C
297.      C    COMPUTES SNOWFALL AND SNOWMELT AND ADJUSTS RAIN
298.      C    ACCORDINGLY.
299.      C
```

```
      CALL SNOW(IDA,SNO,RAIN,DSNO,IT,ADDRUN)

      IF(SNO.GT.PSNO)PSNO=SNO
C
C    NSTAR INDICATES FREEZING TEMPERATURES.
C
      NSTAR=ISTAR(IT)
C
C    COMPUTES RUNOFF.
C
      CALL RUNOFF(WF,RAIN,RUN,SMX)


      IF(SWULE.LT.CRITS.AND.DLAI(IDA).GT.0.0) GO TO 130
C
C    COMPUTES DAILY LEAF AREA INDEX.
C
      XLAI = XLAI+DLAI(IDA)
      IF(XLAI.LT.0.0)  XLAI=0.0
C
C    COMPUTES SURFACE AND SOIL EVAPORATION AND POTENTIAL PLANT
C    TRANSPIRATION.
C
130   CALL EVAPOT(SWULE,ET,PINF,SNO,T,ESIT,TET,ESS,WF,EP,ES)
C
C    COMPUTES PLANT TRANSPIRATION WHEN SOIL WATER CONTENT LIMITS
C    PLANT TRANSPIRATION AND DISTRIBUTES EVAPOTRANSPIRATION
C    AMONG TOP SEGMENTS.
C
      CALL ETCHK(ET,ETT,ESS,EP,ES,WF,BALT)
      ITER=4
      IF(LFLAG1.GT.0) GO TO 133

      NSEG1B=1
      NSEG1E=NSEG1
      NSEG1D=NSEG1E
      LAY1B=1
      LAY1E=LAY - NSEG2 - NSEG3
      IF(LAYER(LAY1E).EQ.5.OR.LAYER(LAY1E).EQ.3)NSEG1D=NSEG1E-1
      IF(LAYER(LAY1E).EQ.5.OR.LAYER(LAY1E).EQ.3)
     1  YSWUL1=YSWUL1-SWUL(NSEG1E)
      LFLAG1=1
C
C    COMPUTES LATERAL AND VERTICAL WATER ROUTING IN THE TOP
C    SUBPROFILE.
C
 133  CALL DRAIN(PINF,ITER,DRN3,PRC3,ET,NSEG1B,
     1    NSEG1E,LAY1B,LAY1E,BALY,HED3,FLEAK,ADDRUN,
     2    QDRN3,BALT,QPRCY3,QLATY3,ISAND)
C
```

```
C    ACCOUNTING IS PERFORMED.
C
      IF(HED3.GT.PHED3) PHED3=HED3

      SWULE=0.0
      DO 140 J=1,7
      SWULE=SWULE+SWUL(J)
140   CONTINUE
      SW=SWULE/VDEPTH
      IF(SW.LT.DSW) DSW=SW
      IF(SW.GT.PSW) PSW=SW
C
C    EXCESS WATER ADDED TO THE TOP SEGMENT IS DIVERTED TO RUNOFF.
C
      RUN=RUN+ADDRUN*FRUNOF
C
C     COMPUTES SOIL WATER CONTENT IN THE TOP SUBPROFILE.
C
      ADDRUN=ADDRUN*(1.0-FRUNOF)
      SWULE1=ADDRUN
      DO 141 J=1,NSEG1D
      SWULE1=SWULE1+SWUL(J)
  141 CONTINUE

C
C     COMPUTES DAILY CHANGE IN WATER STORAGE, OUTFLOW
C     AND BALANCE FOR THE TOP SUBPROFILE.
C
      DSTO1=SWULE1-YSWUL1+SNO-YSNO
      DOUT1=RUN+ETT+DRN3+PRC3
      DBAL1=PRE(IDA)-DSTO1-DOUT1

C
C     IF BALANCE IS TOO LARGE, OUTFLOW IS LARGE ENOUGH AND
C     INCREASE IN STORAGE IS LESS THAN THE PRECIPITATION,
C     THE OUTFLOWS ARE CORRECTED.
C
      IF(ABS(DBAL1).LT.0.00001) GO TO 144
      IF(ABS(DOUT1).LT.0.00001) GO TO 142

      IF((PRE(IDA)-DSTO1).LT.0.0) GO TO 142
      RATIO1=(PRE(IDA)-DSTO1)/DOUT1
      RUN=RUN*RATIO1
      ETT=ETT*RATIO1
      DRN3=DRN3*RATIO1
      PRC3=PRC3*RATIO1
      GO TO 144
C
C     THE CHANGE IN SOIL WATER STORAGE IS CORRECTED.
C
```

```
  142 XSW1=SWULE1-ADDRUN
      SWULE1=ADDRUN
      DO 143 J=1,NSEG1D
      SWUL(J)=SWUL(J)+(DBAL1*SWUL(J)/XSW1)
      SWULE1=SWULE1+SWUL(J)
  143 CONTINUE


C
C     INITIALIZE VARIABLES FOR NEXT TIME PERIOD.
C
  144 YSNO=SNO
      YSWUL1=SWULE1

C
C     PERFORM ACCOUNTING OF MONTHLY AND ANNUAL TOTALS AND
C     PEAK VALUES FOR THE TOP SUBPROFILE.
C
      RUNM(IMO)=RUNM(IMO)+RUN
      RUNA(IYR)=RUNA(IYR)+RUN
      IF(RUN.GT.PRUN) PRUN=RUN

      ETM(IMO)=ETM(IMO)+ETT
      ETA(IYR)=ETA(IYR)+ETT

      PREM(IMO)=PREM(IMO)+PRE(IDA)
      PREA(IYR)=PREA(IYR)+PRE(IDA)
      IF(PRE(IDA).GT.PPRE) PPRE=PRE(IDA)

      PRC3M(IMO)=PRC3M(IMO)+PRC3
      PRC3A(IYR)=PRC3A(IYR)+PRC3
      IF(PRC3.GT.PPRC3) PPRC3=PRC3

      DRN3M(IMO)=DRN3M(IMO)+DRN3
      DRN3A(IYR)=DRN3A(IYR)+DRN3
      IF(DRN3.GT.PDRN3) PDRN3=DRN3

      IF(NSEG2.LE.0) GO TO 150

C
C     CONTROLS SIMULATION OF SECOND SUBPROFILE FROM THE TOP.
C
      ITER=1
      IF(LFLAG2.GT.0) GO TO 154
      NSEG2B=NSEG1+1
      NSEG2E=NSEG1+NSEG2
      NSEG2D=NSEG2E
      LAY2B=LAY1E+1
      LAY2E=LAY1E+NSEG2
      IF(LAYER(LAY2E).EQ.5.OR.LAYER(LAY2E).EQ.3)NSEG2D=NSEG2E-1
```

```
450.          IF(LAYER(LAY2E).EQ.5.OR.LAYER(LAY2E).EQ.3)
451.         1  YSWUL2=YSWUL2-SWUL(NSEG2E)
452.          LFLAG2=1
453.
454.     C
455.     C     SETS INFOLW EQUAL TO PERCOLATION FROM TOP SUBPROFILE.
456.     C
457.      154  FIN2=PRC3
458.
459.     C
460.     C     COMPUTES LATERAL AND VERTICAL WATER ROUTING
461.     C     IN THE SECOND SUBPROFILE FROM THE TOP.
462.     C
463.          CALL DRAIN(FIN2,ITER,DRN2,PRC2,ET,NSEG2B,
464.         1   NSEG2E,LAY2B,LAY2E,BALY,HED2,FLEAK,EXWAT2,QDRN2,BALT,
465.         2   QPRCY2,QLATY2,ISAND)
466.
467.          IF(HED2.GT.PHED2) PHED2=HED2
468.
469.     C
470.     C     COMPUTES SOIL WATER CONTENT IN THE
471.     C     SECOND SUBPROFILE FROM THE TOP.
472.     C
473.          SWULE2=0.0
474.          DO 145 J=NSEG2B,NSEG2D
475.          SWULE2=SWULE2+SWUL(J)
476.        145 CONTINUE
477.     C
478.     C     COMPUTES DAILY CHANGE IN WATER STORAGE, OUTFLOW
479.     C     AND BALANCE FOR THE SECOND SUBPROFILE FROM THE TOP.
480.     C
481.          DSTO2=SWULE2-YSWUL2
482.          DOUT2=DRN2+PRC2
483.          DBAL2=PRC3-DSTO2-DOUT2
484.
485.     C
486.     C     IF BALANCE IS TOO LARGE, OUTFLOW IS LARGE ENOUGH AND
487.     C     INCREASE IN STORAGE IS LESS THAN THE PRECIPITATION,
488.     C     THE OUTFLOWS ARE CORRECTED.
489.     C
490.          IF(ABS(DBAL2).LT.0.00001) GO TO 148
491.          IF(ABS(DOUT2).LT.0.00001) GO TO 146
492.          IF((PRC3-DSTO2).LT.0.0) GO TO 146
493.          RATIO2=(PRC3-DSTO2)/DOUT2
494.          DRN2=DRN2*RATIO2
495.          PRC2=PRC2*RATIO2
496.          GO TO 148
497.     C
498.     C     THE CHANGE IN SOIL WATER STORAGE IS CORRECTED.
499.     C
```

```
  146 XSW2=SWULE2
      SWULE2=0.0
      DO 147 J=NSEG2B,NSEG2D
      SWUL(J)=SWUL(J)+(DBAL2*SWUL(J)/XSW2)
      SWULE2=SWULE2+SWUL(J)
  147 CONTINUE

C
C     INITIALIZES VARIABLES FOR THE NEXT TIME PERIOD.
C
  148 YSWUL2=SWULE2


C
C     PERFORM ACCOUNTING OF MONTHLY AND ANNUAL TOTALS AND
C     PEAK VALUES FOR THE SECOND SUBPROFILE FROM THE TOP.
C
      PRC2M(IMO)=PRC2M(IMO)+PRC2
      PRC2A(IYR)=PRC2A(IYR)+PRC2
      IF(PRC2.GT.PPRC2) PPRC2=PRC2

      DRN2M(IMO)=DRN2M(IMO)+DRN2
      DRN2A(IYR)=DRN2A(IYR)+DRN2
      IF(DRN2.GT.PDRN2) PDRN2=DRN2

      IF(NSEG3.LE.0) GO TO 150

C
C     CONTROLS SIMULATION OF THIRD SUBPROFILE FROM THE TOP.
C
      ITER=1
      IF(LFLAG3.GT.0) GO TO 156
      NSEG3B=NSEG2E+1
      NSEG3E=NSEG2E+NSEG3
      NSEG3D=NSEG3E
      LAY3B=LAY2E+1
      LAY3E=LAY
      IF(LAYER(LAY3E).EQ.5.OR.LAYER(LAY3E).EQ.3)NSEG3D=NSEG3E-1
      IF(LAYER(LAY3E).EQ.5.OR.LAYER(LAY3E).EQ.3)
     1YSWUL3=YSWUL3-SWUL(NSEG3E)
      LFLAG3=1

C
C     SETS INFLOW EQUAL TO PERCOLATION FROM
C     SECOND SUBPROFILE FROM THE TOP.
C
  156 FIN1=PRC2

C
C     COMPUTES LATERAL AND VERTICAL WATER ROUTING IN
```

```
C     THE THIRD SUBPROFILE FROM THE TOP.
C
      CALL DRAIN(FIN1,ITER,DRN1,PRC1,ET,NSEG3B,
     1   NSEG3E,LAY3B,LAY3E,BALY,HED1,FLEAK,EXWAT1,QDRN1,BALT,
     2   QPRCY1,QLATY1,ISAND)

      IF(HED1.GT.PHED1) PHED1=HED1

C
C     COMPUTES SOIL WATER CONTENT IN THE THIRD
C     SUBPROFILE FROM THE TOP.
C
      SWULE3=0.0
      DO 149 J=NSEG3B,NSEG3D
      SWULE3=SWULE3+SWUL(J)
  149 CONTINUE

C
C     IF BALANCE IS TOO LARGE, OUTFLOW IS LARGE ENOUGH AND
C     INCREASE IN STORAGE IS LESS THAN THE PRECIPITATION,
C     THE OUTFLOWS ARE CORRECTED.
C
      DSTO3=SWULE3-YSWUL3
      DOUT3=DRN1+PRC1
      DBAL3=PRC2-DSTO3-DOUT3

      IF(ABS(DBAL3).LT.0.00001) GO TO 153
      IF(ABS(DOUT3).LT.0.00001) GO TO 151
      IF((PRC2-DSTO3).LT.0.0) GO TO 151
      RATIO3=(PRC2-DSTO3)/DOUT3
      DRN1=DRN1*RATIO3

      PRC1=PRC1*RATIO3
      GO TO 153
C
C     THE CHANGE IN SOIL WATER STORAGE IS CORRECTED.
C
  151 XSW3=SWULE3
      SWULE3=0.0
      DO 152 J=NSEG3B,NSEG3D
      SWUL(J)=SWUL(J)+(DBAL3*SWUL(J)/XSW3)
      SWULE3=SWULE3+SWUL(J)
  152 CONTINUE

C
C     INITIALIZES VARIABLES FOR NEXT TIME PERIOD.
C
  153 YSWUL3=SWULE3
```

```
C
C     PERFORM ACCOUNTING OF MONTHLY AND ANNUAL TOTALS AND
C     PEAK VALUES FOR THE THIRD SUBPROFILE FROM THE TOP.
C
      PRC1M(IMO)=PRC1M(IMO)+PRC1
      PRC1A(IYR)=PRC1A(IYR)+PRC1
      IF(PRC1.GT.PPRC1)PPRC1=PRC1

      DRN1M(IMO)=DRN1M(IMO)+DRN1
      DRN1A(IYR)=DRN1A(IYR)+DRN1
      IF(DRN1.GT.PDRN1)PDRN1=DRN1

C
C     CALLS SUBROUTINE OUTDAY IF DAILY OUTPUT IS DESIRED.
C
  150 IF(IDAILY.EQ.1)CALL OUTDAY(IUNIT,IUNITT,IUNITB,RUN,IDA,
     1 JYEAR,PRE)
C
C     END OF DAILY LOOP.
C

  160 CONTINUE
      PSWULE=ADDRUN

C
C     COMPUTES TOTAL SOIL WATER STORAGE.
C
      DO 170 J=1,NSEG
      PSWULE=PSWULE+SWUL(J)
  170 CONTINUE

C
C     COMPUTES YEARLY WATER BUDGET BALANCE CHECK.
C
      BAL(IYR)= OSWULE-PSWULE+OLDSNO-SNO+PREA(IYR)-RUNA(IYR)
     1          -PRC1A(IYR)-PRC2A(IYR)-PRC3A(IYR)-DRN1A(IYR)
     2          -DRN2A(IYR)-DRN3A(IYR)-ETA(IYR)

      IF(NSEG3.GT.0)BAL(IYR)=BAL(IYR)+PRC2A(IYR)+PRC3A(IYR)

      IF(NSEG2.GT.0.AND.NSEG3.EQ.0)BAL(IYR)=BAL(IYR)+
     1  PRC1A(IYR)+PRC3A(IYR)

      IF(NSEG2.EQ.0)BAL(IYR)=BAL(IYR)+PRC1A(IYR)+PRC2A(IYR)


C
C     CALLS SUBROUTINE OUTMO IF MONTHLY OUTPUT IS DESIRED.
C
```

```
650.          IF(IMONTH.EQ.1)CALL OUTMO(IMO,JYEAR,IYR,
651.         1  IUNIT,IUNITT)
652.     C
653.     C     CALLS SUBROUTINE OUTYR TO PRINT ANNUAL TOTALS.
654.     C
655.          IF(IO2.EQ.0.AND.IO3.EQ.0)
656.         1 CALL OUTYR(IYR,IUNIT,IUNITT,SNO,OLDSNO)
657.
658.     C
659.     C     INITIALIZES VARIABLES FOR THE NEXT YEAR.
660.     C
661.          OSWULE=PSWULE
662.          OLDSNO=SNO
663.
664.     C
665.     C     END OF YEARLY LOOP.
666.     C
667.       190 CONTINUE
668.          REWIND 4
669.          REWIND 7
670.          REWIND 14
671.          REWIND 13
672.          REWIND 15
673.
674.     C
675.     C     CALLS SUBROUTINE OUTAVG TO PRINT AVERAGE
676.     C     RESULTS FOR THE SIMULATICN PERIOD.
677.     C
678.          IF(IO4.EQ.1.OR.IO5.EQ.1)GO TO 215
679.          CALL OUTAVG(LMYR,IUNIT,IUNITT)
680.     C
681.     C     CALLS SUBROUTINE OUTPEK TO PRINT PEAK
682.     C     RESULTS FOR THE SIMULATION PERIOD.
683.     C
684.          CALL OUTPEK(LMYR,IUNIT,IUNITT,JYEAR)
685.      215 CONTINUE
686.          RETURN
687.          END
688.     C
689.     C
690.     C      ************************* MONTH *************************
691.     C
692.
693.     C
694.     C     THIS INTEGER FUNCTION SUBPROGRAM DETERMINES THE
695.     C     NUMBER OF THE MONTH FOR A GIVEN JULIAN DATE AND
696.     C     A FLAG FOR A LEAP YEAR. FLAG EQUALS 1 FOR A LEAP
697.     C     YEAR AND 0 FOR NON LEAP YEAR.
698.     C
699.          INTEGER FUNCTION MONTH(JDAY,FLAG)
```

```
      INTEGER CAL(12),FLAG
C
C     CAL(12) ARE THE JULIAN DATES OF THE LAST DAY
C     OF EACH MONTH OF A LEAP YEAR.
C
      DATA CAL /31,60,91,121,152,182,213,244,274,305,335,366/
      JTMP     =JDAY
C
C     ADJUSTS JULIAN DATE FOR JULIAN DATES AFTER JANUARY.
C
      IF(JDAY.GT.CAL(1)) JTMP=JDAY+FLAG

C
C     COMPARES ADJUSTED JULIAN DATE WITH ARRAY OF JULIAN DATES
C     FOR THE LAST DAY OF EACH MONTH TO DETERMINE MONTH.
C
      DO 10 I=1,12
      IF(JTMP.LE.CAL(I)) GO TO 20
   10 CONTINUE

      I        =1

   20 CONTINUE
      MONTH   =I
C
C     RETURNS NUMBER OF THE MONTH.
C
      RETURN
      END
```

```
C
C ********************** SITE ************************
C
C
C    SUBROUTINE SITE READS DESIGN INFORMATION FROM THE USER.
C
      SUBROUTINE SITE(LAYER,LAY,KVEG,ISAND)
      DIMENSION LAYER(10),KLM(74),VALUE(10),SLOPE(9),XLENG(9)
C
C    INITIALIZES ARRAYS.
C
      DO 5 J=1,9
      SLOPE(J)=0.0
    5 XLENG(J)=0.0

   20 FORMAT(74A1)
C
C    READS TOTAL SURFACE AREA.
C
      WRITE(6,25)
   25 FORMAT(1H /1H ,4H6.1 ,37HENTER THE TOTAL AREA OF THE SURFACE, ,
     1 15HIN SQUARE FEET.//)

      READ(10,20)(KLM(J),J=1,74)
      CALL SCAN(NO,VALUE,74,KLM)
      TAREA=VALUE(1)
C
C    READS SLOPE AND DRAINAGE LENGTHS FOR THE LOWEST
C    LATERAL DRAINAGE LAYER IN EACH SUBPROFILE.
C
      DO 50 ILAY=1,LAY
        ILAYP1=ILAY+1
        IF(LAYER(ILAY).NE.2.OR.LAYER(ILAYP1).EQ.2) GO TO 50
        WRITE(6,30)ILAY
   30   FORMAT(1H /41H 6.2 ENTER THE SLOPE AT THE BASE OF SOIL ,
     1  5HLAYER,I2,13H, IN PERCENT.//)

      READ(10,20)(KLM(J),J=1,74)
        CALL SCAN(NO,VALUE,74,KLM)
        SLOPE(ILAY)=VALUE(1)

        WRITE(6,40)
   40   FORMAT(1H /41H 6.3 ENTER THE MAXIMUM DRAINAGE DISTANCE ,
     1  15HALONG THE SLOPE/1X,26HTO THE COLLECTOR, IN FEET.//)

        READ(10,20)(KLM(J),J=1,74)
        CALL SCAN(NO,VALUE,74,KLM)
        XLENG(ILAY)=VALUE(1)

```

```
   50 CONTINUE
      JCOUNT=12
      WRITE(5,60)TAREA,JCOUNT
   60 FORMAT(F12.0,I7)
      JCOUNT=13
      WRITE(5,70)(LAYER(J),J=1,9),JCOUNT
   70 FORMAT(10I7)
      JCOUNT=14
      WRITE(5,80)(SLOPE(J),J=1,9),JCOUNT
      JCOUNT=15
      WRITE(5,90)(XLENG(J),J=1,9),JCOUNT
   80 FORMAT(9F7.2,I7)
   90 FORMAT(9F7.1,I7)
      WRITE(5,100)KVEG,ISAND
  100 FORMAT(2I3)
      REWIND 5
      RETURN
      END
```

```
C
C      ************************ SNOW ************************
C
C
C    SUBROUTINE SNOW ADJUST THE RAINFALL FOR FREEZING
C    TEMPERATURES, AND COMPUTES SNOW ACCUMULATION AND SNOWMELT.
C
      SUBROUTINE SNOW(IDA,SNO,RAIN,DSNO,IT,ADDRUN)
      COMMON/BLK8/PRE(370),TMPF(366),RAD(366),DLAI(367),GR,XLAI1

      IF(TMPF(IDA).GE.32.0) GO TO 10
C
C    ADDS PRECIPITATION TO SNOW STORAGE WHEN FREEZING AND
C    SETS RAINFALL TO ZERO.
C
      SNO=SNO+PRE(IDA)+ADDRUN
      RAIN=0.0
      DSNO=PRE(IDA)
      IT=1
      RETURN
C
C    COMPUTES SNOWMELT, THEN SUBTRACTS IT FROM SNOW STORAGE
C    AND ADDS IT TO RAINFALL.
C
   10 CONTINUE
      XMELT=0.06*(TMPF(IDA)-32.0)
      IF(XMELT.GT.SNO) XMELT=SNO
      SNO=SNO-XMELT
      RAIN=PRE(IDA)+XMELT+ADDRUN
      DSNO=-XMELT
      IT=2
      RETURN
      END
```

```
C
C      ************************ SORTYR ************************
C
C
C    SUBROUTINE SORTYR SORTS THE YEARS OF PRECIPITATION DATA
C    INTO CHRONOLOGICAL ORDER.
C
      SUBROUTINE SORTYR(KKOUNT)
      DIMENSION IMYEAR(20),RAIN(20,37,10),JYEAR(20)
      IF(KKOUNT.LT.2)RETURN
      REWIND 4
      DO 30 I=1,KKOUNT
      DO 20 J=1,37
C
C    READS THE PRECIPITATION DATA FILE, TAPE 4.
C
      READ(4,10)IMYEAR(I),(RAIN(I,J,K),K=1,10),ICOUNT
   10 FORMAT(I10,10F5.2,I10)
   20 CONTINUE
      JYEAR(I)=IMYEAR(I)
   30 CONTINUE
      REWIND 4
      KK=KKOUNT-1
C
C    SORTS THE YEARS; JYEAR IS SORTED.
C
      DO 50 I=1,KK
      LEAST=JYEAR(I)
      II=I+1
      DO 40 J=II,KKOUNT
      IF(LEAST.LT.JYEAR(J)) GO TO 40
      LEAST=JYEAR(J)
      JYEAR(J)=JYEAR(I)
      JYEAR(I)=LEAST
   40 CONTINUE
   50 CONTINUE
      REWIND 4
C
C    WRITES THE PRECIPITATION DATA IN CHRONOLOGICAL ORDER.
C
   60 DO 90 N=1,KKOUNT
      DO 80 I=1,KKOUNT
      IF(JYEAR(N).NE.IMYEAR(I)) GO TO 80
      DO 70 J=1,37
      WRITE(4,10)JYEAR(N),(RAIN(I,J,K),K=1,10),J
   70 CONTINUE
      GO TO 90
   80 CONTINUE
   90 CONTINUE
```

```
50.          REWIND 4
51.          RETURN
52.          END
```

APPENDIX B

PROGRAM VARIABLES

Variable	Subroutine/Common	Definition
A	COMPUT, DATFIT	The coefficient of the cosine term for computing the daily values of temperature or solar radiation.
A	POTET	The slope of the vapor pressure curve.
AB	RUNOFF	The initial abstraction of precipitation, in inches.
AC	COMPUT, DATFIT	The annual average of the mean monthly temperature or solar radiation values.
ADDRUN	DRAIN, SIMULA, SNOW	The excess infiltration which is added to runoff, in inches.
ADRN1A	OUTAVG	The average annual lateral drainage from the third subprofile from the top, in inches.
ADRN1M(12)	OUTAVG	The average monthly lateral drainage values from the third subprofile from the top, in inches.
ADRN2A	OUTAVG	The average annual lateral drainage from the second subprofile from the top, in inches.
ADRN2M(12)	OUTAVG	The average monthly lateral drainage values from the second subprofile from the top, in inches.
ADRN3A	OUTAVG	The average annual lateral drainage from the top subprofile, in inches.
ADRN3M(12)	OUTAVG	The average monthly lateral drainage values from the top subprofile, in inches.
AETA	OUTAVG	The average annual evapotranspiration, in inches.

PROGRAM VARIABLES (Continued)

Variable	Subroutine/Common	Definition
AETM	OUTAVG	The average monthly evapotranspiration values, in inches.
AI	COMPUT	The midpoint of the month or day.
ALAI	EVAPOT	The daily effective leaf area index.
ALB	POTET	The albedo for solar radiation, set to equal 0.23.
AM	DATFIT	The number of iterations in an annual period, 12 for monthly values.
AN	COMPUT	The number of iterations in an annual period, 365 or 366 for daily values.
AN	DATFIT	The number of years in the period of the harmonic function, set to be 1.0.
ANG	COMPUT	The argument of the sine and cosine terms of the harmonic equation.
APRC1A	OUTAVG	The average annual percolation from the third subprofile from the top, in inches.
APRC1M(12)	OUTAVG	The average monthly percolation values from the third subprofile from the top, in inches.
APRC2A	OUTAVG	The average annual percolation from the second subprofile from the top, in inches.
APRC2M(12)	OUTAVG	The average monthly percolation values from the second subprofile from the top, in inches.
APRC3A	OUTAVG	The average annual percolation from the top subprofile, in inches.
APRC3M(12)	OUTAVG	The average monthly percolation values from the top subprofile, in inches.
APREA	OUTAVG	The average annual precipitation, in inches.
APREM(12)	OUTAVG	The average monthly precipitation values, in inches.

PROGRAM VARIABLES (Continued)

Variable	Subroutine/Common	Definition
AREAG(13)	DCDATA	The leaf areas of the default LAI for excellent grass.
AREAR(13)	DCDATA	The leaf areas of the default LAI for good row crops.
ARUNA	OUTAVG	The average annual runoff, in inches.
ARUNM(12)	OUTAVG	The average monthly runoff values, in inches.
B	COMPUT, DATFIT	The coefficient of the sine term for computing the daily values of solar radiation or temperature.
BAL(20)	BLK13	The annual water budget balance check, in inches.
BALT(16)	AVROUT, DRAIN, ETCHK, PROFIL, SIMULA	The change in water storage for a segment today, in inches.
BALY(16)	AVROUT, DRAIN, PROFIL, SIMULA	The change in water storage for a segment yesterday, in inches.
BDRN	OUTDAY	The daily lateral drainage from the base of the landfill, in inches.
BHED	OUTDAY	The daily head on the barrier soil layer at the base of the landfill, in inches.
BLK1	DCDATA, DSDATA, MAIN, MCDATA, MSDATA, MTRLYR, READCD, SIMULA	A common block of variables to store and pass information.
BLK2	OUTSD, READSD, SEGMNT	A common block of variables to store and pass information.
BLK3	DRAIN, LATFLO, OUTSD, READSD	A common block of variables to store and pass information.
BLK4	CNTRLD, DRAIN, LATFLO, OUTSD, READCD, READSD, SEGMNT, SIMULA	A common block of variables to store and pass information.

PROGRAM VARIABLES (Continued)

Variable	Subroutine/Common	Definition
BLK5	OUTAVG, OUTPEK, OUTSD, OUTYR, READSD, RUNOFF, SIMULA	A common block of variables to store and pass information.
BLK6	CNTRLD, SEGMNT, SIMULA	A common block of variables to store and pass information.
BLK7	AVROUT, DRAIN, ETCHK, HEAD, LATFLO, LATKS, PROFIL, RUNOFF, SEGMNT, SIMULA	A common block of variables to store and pass information.
BLK8	EVAPOT, POTET, READCD, SIMULA, SNOW	A common block of variables to store and pass information.
BLK9	ETCOEF, SEGMNT	A common block of variables to store and pass information.
BLK10	DLAIS, READCD	A common block of variables to store and pass information.
BLK11	EVAPOT, SIMULA	A common block of variables to store and pass information.
BLK12	OUTAVG, OUTMO, SIMULA	A common block of variables to store and pass information.
BLK13	OUTAVG, OUTYR, SIMULA	A common block of variables to store and pass information.
BLK14	OUTPEK, SIMULA	A common block of variables to store and pass information.
BLK15	OUTDAY, SIMULA	A common block of variables to store and pass information.
BOT	CONVRG, DRAIN	The lower limit of the iterative solution in the convergence technique.
BPRC	OUTDAY	The daily percolation from the base of the landfill, in inches.
CAL(12)	MONTH	The Julian date of the last day of each month of a leap year.

PROGRAM VARIABLES (Continued)

Variable	Subroutine/Common	Definition
CDRN	OUTDAY	The daily lateral drainage from the cover of the landfill, in inches.
CF	LATFLO	The correction factor for the lateral drainage equation.
CHED	OUTDAY	The head on the barrier layer at the base of the cover, in inches.
CN1	SIMULA	The SCS runoff curve number for the site under AMC-I.
CN2	BLK5, DSDATA, MSDATA, OPEN SDCHK	The SCS runoff curve number for the site under AMC-II.
CON(9)	BLK2, DSDATA, MSDATA, SDCHK	The soil evaporation (transmissivity) coefficients, in $mm/day^{0.5}$.
CONA	BLK11, ETCOEF, OUTSD	The effective soil evaporation (transmissivity) coefficient for the landfill, in $mm/day^{0.5}$.
CONUL(16)	ETCOEF, SEGMNT	The product of the segment thickness and the evaporation coefficient which is used to compute CONA.
CORECT(7)	DSDATA	Correction factors to adjust the hydraulic conductivity of soil for different types of vegetation.
CPRC	OUTDAY	The daily percolation through the bottom of the landfill cover, in inches.
CRITS	SIMULA	The soil water content below which plant growth stops, in inches.
CYBAR	LATFLO	The factor to convert the average thickness of water profile to the thickness of water profile at crest.
C2	SIMULA	The square of the SCS runoff curve number.
C3	SIMULA	The cube of the SCS runoff curve number.
D(12)	DATFIT	The mean monthly values of temperature or solar radiation to be fitted to a curve.

PROGRAM VARIABLES (Continued)

Variable	Subroutine/Common	Definition
DBAL1	SIMULA	The daily water budget check for the top subprofile, in inches.
DBAL2	SIMULA	The daily water budget check for the second subprofile from the top, in inches.
DBAL3	SIMULA	The daily water budget check for the third subprofile from the top, in inches.
DELAI	DLAIS	The daily rate of change in the leaf area index.
DEPSEG	SEGMNT	Depth to the top of a segment, in inches.
DEPTHL	SEGMNT	Depth to the bottom of a layer, in inches.
DEPTHS	SEGMNT	Depth to the bottom of a segment, in inches.
DLAI(367)	BLK8, DLAIS	The daily changes in leaf area index.
DLDAY	DLAIS	The difference in Julian dates between two adjacent specified LAI values.
DOUT1	SIMULA	The sum of the daily outflow from the top subprofile, in inches.
DOUT2	SIMULA	The sum of the daily outflow from the second subprofile from the top, in inches.
DOUT3	SIMULA	The sum of the daily outflow from the third subprofile from the top, in inches.
DRIN(17)	AVROUT, DRAIN, HEAD, PROFIL	The vertical drainage into a segment, in inches.
DRN	DRAIN, LATFLO	The daily lateral drainage from a subprofile, in inches.
DRNMAX	AVROUT, DRAIN	The maximum drainage from a segment, in inches.
DRN1	BLK15	The daily lateral drainage from the third subprofile from the top, in inches.

PROGRAM VARIABLES (Continued)

Variable	Subroutine/Common	Definition
DRN2	BLK15	The daily lateral drainage from the second subprofile from the top, in inches.
DRN3	BLK15	The daily lateral drainage from the top subprofile, in inches.
DRN1A(20)	BLK13	The annual lateral drainage values from the third subprofile from the top, in inches.
DRN1M(240)	BLK12	The monthly lateral drainage values from the third subprofile from the top, in inches.
DRN2A(240)	BLK13	The annual lateral drainage values from the second subprofile from the top, in inches.
DRN2M(240)	BLK12	The monthly lateral drainage values from the second subprofile from the top, in inches.
DRN3A(20)	BLK13	The annual lateral drainage values from the top subprofile, in inches.
DRN3M(240)	BLK12	The monthly lateral drainage values from the top subprofile, in inches.
DSEG	SEGMNT	The partial thickness of a segment, in inches.
DSNO	SIMULA, SNOW	The daily change in snow, in inches.
DSTO1	SIMULA	The daily change in storage in the top subprofile, in inches.
DSTO2	SIMULA	The daily change in storage from the second subprofile, in inches.
DSTO3	SIMULA	The daily change in storage from the third subprofile, in inches.
DSW	BLK14	The minimum vegetative soil water content during the simulation, in vol/vol.
DT	AVROUT, DRAIN, HEAD	The time increment for modelling lateral drainage and percolation, in days.

PROGRAM VARIABLES (Continued)

Variable	Subroutine/Common	Definition
DXLAI	DLAIS	The difference in leaf area between two adjacent, specified LAI values.
E(16)	AVROUT, DRAIN, HEAD, PROFIL	The evapotranspiration values from the segments for a time period, in inches.
EDEPTH	SEGMNT	The evaporative zone depth, in inches.
ELKS	DRAIN, LATFLO, LATKS	The effective lateral hydraulic conductivity, in inches/day.
EP	ETCHK, EVAPOT, SIMULA	The daily potential plant transpiration, in inches.
EPS	CONVRG, DRAIN	The convergence criteria tolerance.
ES	ETCHK, EVAPOT, SIMULA	The daily soil evaporation, in inches.
ESAT	HEAD	The evapotranspiration from the saturated zone, in inches.
ESO	EVAPOT	The daily potential soil evaporation, in inches.
ESS	ETCHK, EVAPOT, SIMULA	The daily evaporation at the surface, in inches.
EST	CONVRG, DRAIN	The estimate of the combined percolation and lateral drainage from a subprofile, in inches.
ES1	EVAPOT	The daily stage one soil evaporation, in inches.
ES1T	EVAPOT, SIMULA	The accumulative sum of soil evaporation less infiltration, in inches.
ES2	EVAPOT	The daily stage two soil evaporation, in inches.
ET(16)	DRAIN, ETCHK EVAPOT, SIMULA	The daily evapotranspiration values from the segments, in inches.
ETA(20)	OUTAVG, OUTYR, SIMULA	The average evapotranspiration values, in inches.
ETM(240)	OUTAVG, OUTMO, SIMULA	The monthly evapotranspiration values, in inches.

PROGRAM VARIABLES (Continued)

Variable	Subroutine/Common	Definition
ETO(366)	BLK11, POTET	The daily potential evapotranspiration values, in inches.
ETT	BLK15, ETCHK	The daily total evapotranspiration, in inches.
EXCE	PROFIL	Quantity of water above saturation in the segment directly below the segment under consideration, in inches.
EXCESS	DRAIN, PROFIL	Quantity of water above saturation in the top segment of a profile, in inches.
EXTRA	ETCHK	Evapotranspiration from a segment in excess of the plant available water, in inches.
EXWAT1	SIMULA	Quantity of water above saturation in the top segment of the second subprofile, in inches.
EXWAT2	SIMULA	Quantity of water above saturation in the top segment of the third subprofile from the top, in inches.
F	DRAIN	The infiltration during the time period, in inches.
FADN1A	OUTAVG	The average annual lateral drainage from the third subprofile from the top, in percent of the average annual precipitation.
FADN2A	OUTAVG	The average annual lateral drainage from the second subprofile from the top, in percent of the average annual precipitation.
FADN3A	OUTAVG	The average annual lateral drainage from the top subprofile, in percent of the average annual precipitation.
FAETA	OUTAVG	The average annual evapotranspiration, in percent of the average annual precipitation.
FAPC1A	OUTAVG	The average annual percolation from the third subprofile from the top, in percent of the average annual precipitation.

PROGRAM VARIABLES (Continued)

Variable	Subroutine/Common	Definition
FAPC2A	OUTAVG	The average annual percolation from the second subprofile from the top, in percent of the average annual precipitation.
FAPC3A	OUTAVG	The average annual percolation from the top subprofile, in percent of the average annual precipitation.
FAPREA	OUTAVG	The average annual precipitation, in percent of the average annual precipitation.
FARUNA	OUTAVG	The average annual runoff, in percent of the average annual precipitation.
FBAL	OUTYR	The water budget check, in percent of the average annual precipitation.
FC(9)	BLK2, DSDATA, MSDATA, SDCHK	The field capacities of the layers, in vol/vol.
FCOS	DATFIT	The cosine of the mid-monthly fractional part of an annual period.
FCUL(16)	BLK7	The field capacities of the segments, in inches.
FCULE	SIMULA	The field capacity of the evaporative zone, in inches.
FDRN1A	OUTYR	The annual lateral drainage from the third subprofile from the top, in percent of the annual precipitation.
FDRN2A	OUTYR	The annual lateral drainage from the second subprofile from the top, in percent of the annual precipitation.
FDRN3A	OUTYR	The annual lateral drainage from the top subprofile, in percent of the annual precipitation.
FETA	OUTYR	The annual evapotranspiration, in percent of the annual precipitation.
FIN	DRAIN	The daily infiltration, in inches.
FIN1	SIMULA	The daily percolation into the third subprofile from the top, in inches.

PROGRAM VARIABLES (Continued)

Variable	Subroutine/Common	Definition
FIN2	SIMULA	The daily percolation into the second subprofile from the top, in inches.
FLAG	LEAP, MONTH	Used to convert the number of day to 366 for a leap year, set to 0 for a leap year and to 1 for other years.
FLEAK	BLK5, DRAIN, DSDATA, LATFLO, MSDATA, SDCHK	The liner leakage fraction.
FPRC1A	OUTYR	The annual percolation from the third subprofile from the top, in percent of the annual precipitation.
FPRC2A	OUTYR	The annual percolation from the second subprofile from the top, in percent of the annual precipitation.
FPRC3A	OUTYR	The annual percolation from the top subprofile, in percent of the annual precipitation.
FPREA	OUTYR	The annual precipitation, in percent of the annual precipitation.
FRUNA	OUTYR	The annual runoff, in percent of the annual precipitation.
FRUNOF	BLK5, DSDATA, MSDATA, OPEN, SDCHK	The fraction of potential runoff which runs off an open waste site.
FSIN	DATFIT	The sine of the mid-monthly fractional part of an annual period.
G	POTET	The psychrometric constant, set to equal 0.68.
GR	BLK8, DCDATA, MTRLYR	The winter cover factor.
GRVWAT	HEAD	The gravity water in the subprofile, in inches.
GW	DSDATA	The gravity water of a layer, in vol/vol.
H	LATKS	The head above a segment, in inches.

PROGRAM VARIABLES (Continued)

Variable	Subroutine/Common	Definition
H	POTET	The net solar radiation, langleys.
HED	DRAIN	The daily head on the base of the drainage layer, in inches.
HED1	BLK15	The daily head on the base of the third subprofile from the top, in inches.
HED2	BLK15	The daily head on the base of the second subprofile from the top, in inches.
HED3	BLK15	The daily head on the base of the top subprofile, in inches.
I	ANSWER, CNTRLD, COMPUT, DATFIT, DCDATA, DLAIS, DSDATA, MONTH, MCDATA, MSDATA, MTRLYR, OUTAVG, OUTSD, POTET, PRECHK, READCD, READSD, RUNOFF, SCAN, SDCHK, SIMULA, SORTYR	Used as a counter.
IADD	MCDATA	A control variable to show whether additional years of precipitation data were entered.
IANS	ANSWER, DCDATA, DSDATA, MAIN, MCDATA, MSDATA, MTRLYR, PRECHK, SIMULA, SDCHK	Set equal to 0 for an input of yes and to 1 for an input of no.
IBAR	AVROUT, DRAIN	A control variable to indicate whether a barrier layer is used in the subprofile.
ICITY(18)	DCDATA	Used to read and write the default cities and states from a data file of 37 lines with 18 sets of four alphanumeric characters.
ICOMP	SCAN	Used to determine if an alphanumeric character is a number.
ICOUNT	DCDATA, MCDATA, SORTYR	The count of a line or record of precipitation data.

PROGRAM VARIABLES (Continued)

Variable	Subroutine/Common	Definition
IDA	EVAPOT, OUTDAY, SIMULA, SNOW	Counter for the Julian date of a year of simulation.
IDAILY	SIMULA	A control variable to indicate whether daily output is desired.
IDAY	DLAIS	A control variable used to compute daily leaf area indices.
IFLAG	BLK1	A control variable to indicate that the vegetation type has been assigned.
II	SORTYR	Counter for sorting the years of data.
IKOUNT	MCDATA	Control variable for replacing a year of the existing precipitation data.
ILAY	DSDATA, MSDATA, SITE	Counter for the number of layers.
ILAYM1	DSDATA, MSDATA	The number of the layer above the layer being considered.
ILAYP1	SITE	The number of the layer below the layer being considered.
IMO	SIMULA	Counter for the month of the simulation period.
IMONTH	SIMULA	A control variable to indicate whether monthly output is desired.
IMYEAR(20)	PRECHK, SORTYR	The years of simulation.
INEW	MCDATA	A control variable to indicate whether a completely new precipitation data set is being entered.
INEW	SDCHK	A control variable to indicate whether lines of soil data were changed.
IO1	BLK1	A control variable that indicates whether to print only summary of input and output.
IO2	BLK1	A control variable that indicates whether to print only output and summary without input.

PROGRAM VARIABLES (Continued)

Variable	Subroutine/Common	Definition
IO3	BLK1	A control variable that indicates whether to print only summary of output.
IO4	BLK1	A control variable that indicates whether to print only input and output without summary.
IO5	BLK1	A control variable that indicates whether to print only output without input and summary.
IPLUS	SCAN	The character, +.
IPOINT	SCAN	The character, . .
ISAND	AVROUT, DRAIN, DSDATA, MSDATA, OUTSD, READSD, SDCHK, SIMULA, SITE	A control variable that indicates whether the top layer is an unvegetated sand or gravel layer.
ISET	PRECHK	Counter for year of precipitation data to be checked.
ISET	READCD, SIMULA	Control variable to indicate whether multiple years of temperature data are used.
ISOIL	DSDATA	Soil texture number for a layer.
ISTAR(2)	SIMULA	Character array used to indicate freezing temperatures.
IT	SIMULA, SNOW	Control variable to indicate whether the temperature is below 32°F.
ITER	DRAIN, SIMULA	The number of iterations used to model drainage per day.
ITITLE(3,40)	DSDATA, MSDATA, READSD, SDCHK	The title consisting of 3 records with 40 characters per record for the name of the site, the location of the site, and the date of the run.
IUNIT	CNTRLD, OUTAVG, OUTDAY, OUTMO, OUTPEK, OUTYR, SIMULA	The number of subprofiles used in the design.

PROGRAM VARIABLES (Continued)

Variable	Subroutine/Common	Definition
IUNITB	CNTRLD, OUTDAY, SIMULA	The number of subprofiles below the cover of the landfill.
IUNITT	CNTRLD, OUTAVG, OUTDAY, OUTMO, OUTPEK, OUTYR, SIMULA	The number of subprofiles in the cover of the landfill.
IVEG	DCDATA	The default vegetation type.
IWB	CNTRLD	The number of the bottom waste layer.
IWT	CNTRLD	The number of the top waste layer.
IYR	BLK15, OUTMO, OUTYR	The counter for the years of simulation.
J	AVROUT, DCDATA, DLAIS, DRAIN, DSDATA, ETCHK, ETCOEF, EVAPOT, HEAD, LATKS, MAIN, MCDATA, MSDATA, MTRLYR, OPEN, OUTAVG, OUTMO, PRECHK, PROFIL, READCD, READSD, SDCHK, SEGMNT, SIMULA, SITE, SORTYR	A counter.
JCOUNT	DSDATA, MSDATA, SDCHK, SITE	Line number for the soil and design data.
JDAY	DLAIS	A control variable used to compute daily leaf area indices.
JDAY	MONTH	The Julian date of a year of simulation.
JSET	PRECHK	Counter for line of precipitation data to be corrected.
JSET	READCD, SIMULA	Control variable to indicate whether multiple years of solar radiation data are used.
JTMP	MONTH	The Julian date of a year of simulation.

PROGRAM VARIABLES (Continued)

Variable	Subroutine/Common	Definition
JYEAR(20)	BLK13, MCDATA, MTRLYR, OUTDAY, OUTMO, OUTPEK, SORTYR	The years of simulation.
K	CNTRLD, DCDATA, DLAIS, DRAIN, HEAD, LATKS, MCDATA, MTRLYR, OUTAVG, OUTSD, PRECHK, PROFIL, READCD, SCAN, SDCHK, SEGMNT, SORTYR	A counter.
KANS	ANSWER	A variable read for user input of yes or no.
KANS	MAIN	A control variable to direct the program to accept input, perform the simulation, or stop.
KCDATA	BLK1, OUTSD	Control variable to indicate whether default climatologic data are used.
KCITY	DCDATA, OUTSD	The first four characters of the name of the selected default city.
KFLAG	BLK1	A control variable to indicate that the vegetation type has been assigned.
KK	CONVRG, DRAIN, PROFIL	A counter of the iterations used for convergence in the drainage routine.
KK	SORTYR	A control variable for the number of years of precipitation data to be sorted.
KKOUNT	MCDATA, MTRLYR, PRECHK, SIMULA, SORTYR	The number of years of precipitation data.
KLM(74)	DCDATA, DSDATA, MAIN, MCDATA, MSDATA, MTRLYR, OPEN, PRECHK, SCAN, SDCHK, SIMULA, SITE	A string of 74 alphanumeric characters read to determine numeric input values from the user.

PROGRAM VARIABLES (Continued)

Variable	Subroutine/Common	Definition
KONT	MCDATA	Control variable for replacing years of existing precipitation data.
KPT	SCAN	Control to add the next digit of a number to the previously read digits.
KSDATA	BLK1	Control variable to indicate whether default soil characteristics are used.
KSET	READCD, SIMULA	Control variable to indicate whether multiple years of leaf area indices are used.
KSOIL(9)	DSDATA	The soil texture numbers of the layers.
KSTATE	DCDATA, OUTSD	The first four characters of the name of the selected default state entered.
KVEG	BLK1, OUTSD, READCD, READSD, SDCHK, SIMULA SITE	The vegetation type for default data options, equals 8 if manual options are used.
K1	DCDATA, OUTSD	The second four characters of the state entered.
K2	DCDATA, OUTSD	The third four characters of the state entered.
K3	DCDATA, OUTSD	The fourth four characters of the state entered.
K4	DCDATA, OUTSD	The fifth four characters of the state entered.
K5	DCDATA, OUTSD	The second four characters of the city entered.
K6	DCDATA, OUTSD	The third four characters of the city entered.
K7	DCDATA, OUTSD SCAN	The fourth four characters of the city entered.
K8	DCDATA, OUTSD	The fifth four characters of the city entered.
L	DRAIN, MCDATA	A counter.

PROGRAM VARIABLES (Continued)

Variable	Subroutine/Common	Definition
LAT	DRAIN	A control variable to indicate whether a lateral drainage layer is used in the subprofile.
LAY	BLK4, DSDATA, MSDATA, SDCHK, SITE	The number of layers in the landfill profile.
LAYB	DRAIN	The number of the top layer of the subprofile.
LAYD	DRAIN, LATFLO	The number of the bottom lateral drainage layer of a subprofile.
LAYE	DRAIN, LATFLO	The number of the bottom layer of a subprofile.
LAYER(10)	BLK4, DSDATA, MSDATA, SDCHK, SITE	The layer type descriptor numbers of the layers in the landfill.
LAYS	SEGMNT	The number of the bottom layer of the second subprofile from the top.
LAY1	SEGMNT	The number of layers in the top subprofile.
LAY1B	SIMULA	The number of the top layer of the top subprofile.
LAY1E	SIMULA	The number of the bottom layer of the top subprofile.
LAY1M1	SEGMNT	The number of the layer above the bottom layer of the top subprofile.
LAY2	SEGMNT	The number of the top layer of the second subprofile from the top.
LAY2B	SEGMNT	Counter for the layers in the second subprofile from the top.
LAY2B	SIMULA	The number of the top layer of the second subprofile from the top.
LAY2E	SIMULA	The number of the bottom layer of the second subprofile from the top.

PROGRAM VARIABLES (Continued)

Variable	Subroutine/Common	Definition
LAY3	SEGMNT	The number of the top layer of the third subprofile from the top.
LAY3B	SEGMNT	Counter for the layers in the third subprofile from the top.
LAY3B	SIMULA	The number of the top layer of the third subprofile from the top.
LAY3E	SIMULA	The number of the bottom layer of the third subprofile from the top.
LCITY	DCDATA	The four character name of the city read from the default climatologic data file.
LDATEG(13)	DCDATA	The Julian dates of the 13 default LAI values for excellent grass.
LDATER(13)	DCDATA	The Julian dates of the 13 default LAI values for good row crops.
LDAY13(13)	BLK10, DCDATA, MTRLYR	The Julian dates of the 13 LAI values used in the simulation.
LEAST	SORTYR	The last year that was arranged in order.
LFLAG1	SIMULA	A control variable for initializing the top subprofile.
LFLAG2	SIMULA	A control variable for initializing the second subprofile from the top.
LFLAG3	SIMULA	A control variable for initializing the third subprofile from the top.
LINER	BLK5, DSDATA, MSDATA, SDCHK	The number of synthetic liners used in the design.
LISTA(2)	ANSWER	Keyword storage for the words yes and no.
LISTC(99)	DCDATA	Keyword storage for the first four characters of all default cities.
LISTS(41)	DCDATA	Keyword storage for the first four characters of all default states.
LMYR	OUTAVG, OUTPEK, SIMULA	The number of years to be simulated.

PROGRAM VARIABLES (Continued)

Variable	Subroutine/Common	Definition
LSET	READCD, SIMULA	Control variable to indicate whether multiple years of winter cover factors are used.
LSTATE	DCDATA	The four character name of the state read from the default climatologic data file.
LYEAR	DCDATA, MTRLYR, REACD	Control variable to indicate whether multiple years of climatologic variables, other than precipitation, are used.
M	DATFIT	The number of monthly divisions in an annual period, 12.
M	MCDATA, MRTLYR, OUTAVG, READCD	A counter.
MCITY	DCDATA	The number which corresponds to the selected default city/state.
MFLAG	CONVRG, DRAIN	Control variable to indicate whether the drainage satisfied the convergence criteria.
MINUS	SCAN	The character, -.
MO	SIMULA	The number of the month for the date.
MONTHB	OUTMO	The number of the first month of a year of simulation.
MONTHE	OUTMO	The number of the last month of a year of simulation.
MO1	SIMULA	The number of the month of a year for yesterday.
MSET	READCD, SIMULA	Control variable to indicate whether multiple years of temperature or solar radiation values are used.
M1	MTRLYR	A counter.
M7	SCAN	The number of characters in the input string or array, 74.
N	COMPUT	Number of divisions in an annual period, 12 for months, etc.

PROGRAM VARIABLES (Continued)

Variable	Subroutine/Common	Definition
N	READCD, SCAN SORTYR	A counter.
NCOL	SCAN	A counter.
ND	READCD, SIMULA	The number of days in the year of simulation.
NDA	READCD	The number of days in a leap year.
NO	DCDATA, DSDATA, MAIN, MCDATA, MSDATA, MTRLYR, OPEN PRECHK, SCAN, SDCHK, SIMULA, SITE	The number of numeric values entered on a line of record interpreted by subroutine SCAN.
NOYEAR	MCDATA	The year of the precipitation data to be replaced.
NSEG	SIMULA	The number of segments.
NSEGB	AVROUT, DRAIN, HEAD, LATKS, PROFIL	The number of the top segment of a subprofile.
NSEGE	DRAIN, LATFLO	The number of the bottom segment of a subprofile.
NSEGL	AVROUT, DRAIN, HEAD, LATKS, PROFIL	The number of the lowest segment of a subprofile, which is not a barrier layer.
NSEG1	BLK6	The number of segments in the top subprofile.
NSEG1B	SIMULA	The number of the top segment in the top subprofile.
NSEG1D	SIMULA	The number of the lowest segment of the top subprofile, which is not a barrier layer.
NSEG1E	SIMULA	The number of the bottom segment in the top subprofile.
NSEG2	BLK6	The number of segments in the second subprofile from the top.

PROGRAM VARIABLES (Continued)

Variable	Subroutine/Common	Definition
NSEG2B	SEGMNT, SIMULA	The number of the top segment in the second subprofile from the top.
NSEG2D	SIMULA	The number of the lowest segment of the second subprofile from the top, which is not a barrier layer.
NSEG2E	SEGMNT, SIMULA	The number of the bottom segment in the second subprofile from the top.
NSEG3	BLK6	The number of segments in the third subprofile from the top.
NSEG3B	SEGMNT, SIMULA	The number of the top segment in the third subprofile from the top.
NSEG3D	SIMULA	The number of the lowest segment of the third subprofile from the top, which is not a barrier layer.
NSEG3E	SEGMNT, SIMULA	The number of the bottom segment in the third subprofile from the top.
NSTAR	BLK15	The indicator for freezing temperatures.
NT	READCD, SIMULA	Control variable to indicate whether the year is a leap year.
NUM(10)	SCAN	The ten numeric characters.
NYEAR	DCDATA, MCDATA, READCD, SIMULA	The year of simulation.
NYR	PRECHK	The year of precipitation data to be checked.
OLDSNO	OUTYR, SIMULA	The snow water at the start of the year of simulation, in inches.
OSWULE	BLK13	The soil water storage throughout the landfill at the start of the year of simulation, in inches.
PAW	DSDATA	The plant available water capacity of a layer, in vol/vol.
PAWC	ETCHK	The plant available water capacity of the evaporative zone, in inches.

PROGRAM VARIABLES (Continued)

Variable	Subroutine/Common	Definition
PAWCUL	ETCHK	The plant available water storage of a segment, in inches.
PDRN1	BLK14	The peak daily lateral drainage from the third subprofile from the top, in inches.
PDRN2	BLK14	The peak daily lateral drainage from the second subprofile from the top, in inches.
PDRN3	BLK14	The peak daily lateral drainage from the top subprofile, in inches.
PEFF	ETCHK	The plant transpiration efficiency for limiting soil water conditions.
PHED1	BLK14	The peak daily head on bottom of the third subprofile from the top, in inches.
PHED2	BLK14	The peak daily head on the bottom of the second subprofile from the top, in inches.
PHED3	BLK14	The peak daily head on the bottom of the top subprofile, in inches.
PI	DATFIT	A variable set to equal π, 3.14159.
PINF	EVAPOT, SIMULA	The daily infiltration, in inches.
PORO(9)	BLK2, DSDATA, MSDATA, SDCHK	The porosity of a layer, in vol/vol.
PPRC1	BLK14	The peak daily percolation from the base of the third subprofile from the top, in inches.
PPRC2	BLK14	The peak daily percolation from the base of the second subprofile from the top, in inches.
PPRC3	BLK14	The peak daily percolation from the base of the top subprofile, in inches.
PPRE	BLK14	The peak daily rainfall, in inches.
PRC	DRAIN, LATFLO	The daily percolation from a subprofile, in inches.

PROGRAM VARIABLES (Continued)

Variable	Subroutine/Common	Definition
PRC1	BLK15	The daily percolation from the third subprofile from the top, in inches.
PRC1A(20)	BLK13	The annual values of percolation from the third subprofile from the top, in inches.
PRC1M(240)	BLK12	The monthly values of percolation from the third subprofile from the top, in inches.
PRC2	BLK15	The daily percolation from the second subprofile from the top, in inches.
PRC2A(20)	BLK13	The annual values of percolation from the second subprofile from the top, in inches.
PRC2M(20)	BLK12	The monthly values of percolation from the second subprofile from the top, in inches.
PRC3	BLK15	The daily percolation from the top subprofile, in inches.
PRC3A(20)	BLK13	The annual values of percolation from the top subprofile, in inches.
PRC3M(240)	BLK12	The monthly values of percolation from the top subprofile, in inches.
PRE(370)	BLK8, OUTDAY	The daily precipitation values for a year of simulation, in inches.
PREA(20)	BLK13	The annual precipitation values, in inches.
PREC(10)	DCDATA	The precipitation values on a line of input data, in inches.
PREM(240)	BLK12	The monthly precipitation values, in inches.
PRUN	BLK14	The peak daily runoff, in inches.
PSNO	BLK14	The peak daily snow water, in inches.
PSW	BLK14	The peak soil water content in the evaporative zone, in vol/vol.

PROGRAM VARIABLES (Continued)

Variable	Subroutine/Common	Definition
PSWULE	BLK13	The soil water storage throughout the landfill at the end of a year of simulation, in inches.
QDR	DRAIN	The sum of the computed lateral drainage and percolation rates during a time interval, in inches/day.
QDRN	AVROUT, DRAIN	The sum of the estimated lateral drainage and percolation rates during a time interval, in inches/day.
QDRN1	SIMULA	The sum of the estimated lateral drainage and percolation rates for the third subprofile from the top for a time interval, in inches/day.
QDRN2	SIMULA	The sum of the estimated lateral drainage and percolation rates for the second subprofile from the top for a time interval, in inches/day.
QDRN3	SIMULA	The sum of the estimated lateral drainage and percolation rates for the top subprofile for a time interval, in inches/day.
QLAT	DRAIN	The computed lateral drainage rate for a time interval, in inches/day.
QLATY	AVROUT, DRAIN	The estimated lateral drainage rate for a time interval, in inches/day.
QLATY1	SIMULA	The lateral drainage from the third subprofile from the top for the previous time period in inches/day.
QLATY2	SIMULA	The lateral drainage from the second subprofile from the top for the previous time period, in inches/day.
QLATY3	SIMULA	The lateral drainage from the top subprofile for the previous time period, in inches/day.
QOUT	LATFLO	The sum of the computed lateral drainage and percolation rates for a time interval, in inches/day.

PROGRAM VARIABLES (Continued)

Variable	Subroutine/Common	Definition
QOUTMX	DRAIN, HEAD, LATFLO	The maximum drainage rate for a time interval, in inches/day.
QPERC	DRAIN	The computed percolation rate for a time interval, in inches/day.
QPERCY	AVROUT, DRAIN	The estimated percolation rate for a time interval, in inches/day.
QPRCY1	SIMULA	The percolation from the third subprofile from the top for the previous time period, in inches/day.
QPRCY2	SIMULA	The percolation from the second subprofile from the top for the previous time period, in inches/day.
QPRCY3	SIMULA	The percolation from the top subprofile for the previous time period, in inches/day.
RAD(366)	BLK8	The daily solar radiation values for a year of simulation, in langleys.
RADI(12)	DCDATA, MTRLYR, READCD	The monthly solar radiation values for a year of simulation, in langleys.
RADIM(12)	REACD	The curve-fitted computed monthly solar radiation values, in langleys.
RAIN	BLK11, RUNOFF SNOW, SIMULA	The sum of the daily rainfall minus the change in snow water storage, in inches.
RAIN(20,37,10)	MCDATA, PRECHK, SORTYR	The rainfall values for the simulation period, in inches.
RATIO1	SIMULA	The ratio of the outflow to the computed outflow used to balance the water budget in the top subprofile.
RATIO2	SIMULA	The ratio of the outflow to the computed outflow used to balance the water budget in the second subprofile from the top.
RATIO3	SIMULA	The ratio of the outflow to the computed outflow used to balance the water budget in the third subprofile from the top.

PROGRAM VARIABLES (Continued)

Variable	Subroutine/Common	Definition
RC(9)	BLK2, DSDATA, MSDATA, SDCHK	The hydraulic conductivities of the layers, in inches/hr.
RCUL(16)	BLK7	The hydraulic conductivities of the segments, in inches/day.
RCULS(16)	SEGMNT	The product of the hydraulic conductivity and segment thickness to compute the hydraulic conductivity of the segment, in $inches^2/hr$.
RDEPTH	BLK6, DCDATA, MTRLYR, OUTSD, READCD	The evaporative zone depth, in inches.
RUN	EVAPOT, OUTDAY, RUNOFF, SIMULA	The daily runoff, in inches.
RUNA(20)	BLK13	The annual runoff values, in inches.
RUNM(240)	BLK12	The monthly runoff values, in inches.
RO	READCD	The average annual solar radiation, in langleys.
R1	READCD	The coefficient of the cosine term for computing the daily solar radiation values.
R2	READCD	The coefficient of the sine term for computing the daily solar radiation values.
S	PROFIL	The soil water content of a segment, in inches.
S	RUNOFF	The SCS soil water retention parameter, in inches.
SGN	SCAN	The multipliers for the sign of the data being used.
SLOPE(9)	BLK3, SCDHK, SITE	The slopes at the interface between a barrier soil layer and a lateral drainage layer.
SMX	RUNOFF, SIMULA	The maximum SCS soil retention parameter, in inches.

PROGRAM VARIABLES (Continued)

Variable	Subroutine/Common	Definition
SNO	EVAPOT, OUTYR, SIMULA, SNOW	The daily snow water storage, in inches.
SSLOPE	BLK5, SITE	The surface slope, in percent.
STAGE1	ETCOEF, EVAPOT, SIMULA	The upper limit of stage one soil evaporation, in inches.
STHICK(16)	BLK7, ETCOEF	The thickness of the segments, in inches.
SUMA	DATFIT	The sum of the products of the values to be fitted to a curve and the cosine of its location in the annual period.
SUMB	DATFIT	The sum of the products of the values to be fitted to a curve and the sine of its location in the annual period.
SUMD	DATFIT	The average of the values to be fitted to a curve.
SURFSW	EVAPOT	The water available at the surface, in inches.
SW	BLK15	The soil water content of the evaporative zone, in vol/vol.
SW	RUNOFF	The soil water content of segments of the evaporative zone, in inches.
SWLIM	AVROUT	The lower limit of soil water content that can drain on a given day, in inches.
SWUL(16)	BLK7	The soil water contents of the segments, in inches.
SWULE	EVAPOT, OUTSD, SIMULA	The soil water content of the evaporative zone, in inches.
SWULE1	SIMULA	The soil water content of the top subprofile, in inches.
SWULE2	SIMULA	The soil water content of the second subprofile from the top, in inches.
SWULE3	SIMULA	The soil water content of the third subprofile from the top, in inches.

PROGRAM VARIABLES (Continued)

Variable	Subroutine/Common	Definition
SWULY(16)	AVROUT, DRAIN, PROFIL	The soil water contents of the segments for the previous time period, in inches.
SWULYE(16)	AVROUT	The soil water contents of the segments at the end of the previous time period, in inches.
T	EVAPOT, SIMULA	The number of days since stage one soil evaporation stopped.
TADN1A	OUTAVG	The average annual lateral drainage from the third subprofile from the top, in cu. ft.
TADN2A	OUTAVG	The average annual lateral drainage from the second subprofile from the top, in cu. ft.
TADN3A	OUTAVG	The average annual lateral drainage from the top subprofile, in cu. ft.
TAETA	OUTAVG	The average annual evapotranspiration, in cu. ft.
TAPC1A	OUTAVG	The average annual percolation from the base of the third subprofile from the top, in cu. ft.
TAPC2A	OUTAVG	The average annual percolation from the base of the second subprofile from the top, in cu. ft.
TAPC3A	OUTAVG	The average annual percolation from the base of the top subprofile, in cu. ft.
TAPREA	OUTAVG	The average annual precipitation, in cu. ft.
TAREA	BLK5, SDCHK, SITE	The surface area of the landfill, in sq. ft.
TARUNA	OUTAVG	The average annual runoff, in cu. ft.
TBAL	OUTYR	The average water budget balance, in cu. ft.
TDRN1A	OUTYR	The annual lateral drainage from the third subprofile from the top, in cu. ft.

PROGRAM VARIABLES (Continued)

Variable	Subroutine/Common	Definition
TDRN2A	OUTYR	The annual lateral drainage from the second subprofile from the top, in cu. ft.
TDRN3A	OUTYR	The annual lateral drainage from the top subprofile, in cu. ft.
TEMP(12)	DCDATA, MTRLYR, READCD	The mean monthly temperatures for a year of simulation, in degrees Fahrenheit.
TET	EVAPOT, SIMULA	The evapotranspiration when not limited by low soil moisture, in inches.
TETA	OUTYR	The annual evapotranspiration, in cu. ft.
TH	DATFIT	The date in terms of fraction of an annual period.
TH	DRAIN, HEAD LATFLO, LATKS	The head on the base of a subprofile, in inches.
THICK(9)	BLK4, DSDATA, MSDATA, SDCHK	The thicknesses of the layers, in inches.
THICK1	SEGMNT	A variable used to compute the thickness of the evaporative zone.
TI	DATFIT	The midpoint of a division of the harmonic period.
TK	POTET	The daily temperature, in degrees Kelvin.
TMPF(366)	BLK8	The daily temperatures for a year of simulation, in degrees Fahrenheit.
TMPFM(12)	READCD	The computed mean monthly temperatures, in degrees Fahrenheit.
TOP	CONVRG, DRAIN	The upper limit of the iterative solution in the convergence technique.
TOSNO	OUTYR	The snow water at the start of the year of simulation, in cu. ft.
TOSW	OUTYR	The soil water storage throughout the landfill at the start of the year of simulation, in cu. ft.

PROGRAM VARIABLES (Continued)

Variable	Subroutine/Common	Definition
TPDRN1	OUTPEK	The peak daily lateral drainage from the third subprofile from the top, in cu. ft.
TPDRN2	OUTPEK	The peak daily lateral drainage from the second subprofile from the top, in cu. ft.
TPDRN3	OUTPEK	The peak daily lateral drainage from the top subprofile, in cu. ft.
TPPRC1	OUTPEK	The peak daily percolation from the third subprofile from the top, in cu. ft.
TPPRC2	OUTPEK	The peak daily percolation from the second subprofile from the top, in cu. ft.
TPPRC3	OUTPEK	The peak daily percolation from the top subprofile, in cu. ft.
TPPRE	OUTPEK	The peak daily precipitation, in cu. ft.
TPRC1A	OUTYR	The annual percolation from the third subprofile from the top, in cu. ft.
TPRC2A	OUTYR	The annual percolation from the second subprofile from the top, in cu. ft.
TPRC3A	OUTYR	The annual percolation from the top subprofile, in cu. ft.
TPREA	OUTYR	The annual precipitation, in cu. ft.
TPRUN	OUTPEK	The peak daily runoff, in cu. ft.
TPSNO	OUTPEK	The peak daily snow water storage, in cu. ft.
TPSW	OUTYR	The soil water storage throughout the landfill at the end of the year of simulation, in cu. ft.
TRUNA	OUTYR	The annual runoff, in cu. ft.
TSNO	OUTYR	The snow water storage at the end of the year of simulation, in cu. ft.
TO	READCD	The annual average of monthly mean temperatures, in degrees Fahrenheit.

PROGRAM VARIABLES (Continued)

Variable	Subroutine/Common	Definition
T1	READCD	The coefficient of the cosine term for computing the daily mean temperatures, in degrees Fahrenheit.
T2	READCD	The coefficient of the sine term for computing the daily mean temperatures, in degrees Fahrenheit.
UL(16)	BLK7	The porosities or saturated capacities of the segments, in inches.
ULE	OUTSD, SIMULA	The maximum soil water storage in the evaporative zone, in inches.
VALUE(10)	DCDATA, DSDATA, MAIN, MCDATA, MSDATA, MTRLYR, OPEN, PRECHK, SCAN, SDCHK, SIMULA, SITE	Numeric values of input read by use of subroutine SCAN.
VDEPTH	BLK6	The thickness of the evaporative zone, in inches.
V1	AVROUT	A partial solution of the vertical water routing equation.
V2	AVROUT	A partial solution of the vertical water routing equation
V3	AVROUT	A partial solution of the vertical water routing equation.
WCF(7)	DCDATA	The winter cover factors for the seven default vegetative types, in units of leaf area index.
WF(7)	ETCHK, ETCOEF, EVAPOT, RUNOFF, SIMULA	Weighting factors for proportioning the evapotranspiration among the 7 segments and for determining weighted average soil water content.
WP(9)	BLK2, DSDATA, MSDATA, SDCHK	The wilting points of the layers, in vol/vol.
WPUL(16)	BLK7	The wilting points of the segments, in inches.

PROGRAM VARIABLES (Continued)

Variable	Subroutine/Common	Definition
WPULE	SIMULA	The wilting point of the evaporative zone, in inches.
WTSM	RUNOFF	The depth-weighted soil water content of the evaporative zone, in vol/vol.
XAO(7)	DSDATA	A coefficient used to compute the SCS run-off curve number for AMC-II as a function of default vegetation and soil type.
XA1(7)	DSDATA	A coefficient used to compute the SCS run-off curve number for AMC-II as a function of default vegetation and soil type.
XA2(7)	DSDATA	A coefficient used to compute the SCS run-off curve number for AMC-II as a function of default vegetation and soil type.
XCONA(21)	DSDATA	The soil evaporation (transmissivity) coefficients for the 21 default soil types, in $mm/day^{1/2}$.
XFC(21)	DSDATA	The field capacities of the 21 default soil types, in vol/vol.
XGR(7)	DCDATA	The factors to adjust the default leaf area indices for lesser stands of vegetation.
XHEAD	HEAD	The incremental head of a segment, in inches.
XLAI	BLK11	The daily leaf area index.
XLAI1	BLK8, DLAIS	The leaf area index of the first day of a year of simulation.
XLAI13(13)	BLK10, DCDATA, MTRLYR	The leaf area indices for a year of simulation.
XLENG(9)	BLK3, SDCHK, SITE	The maximum drainage distances at the base of the lateral drainage layers, in feet.
XMELT	SNOW	The daily snowmelt, in inches.

PROGRAM VARIABLES (Concluded)

Variable	Subroutine/Common	Definition
XMIR(21)	DSDATA	The minimum infiltration rates of the 21 default soil types, in inches/hr.
XPOROS(21)	DSDATA	The porosities of the 21 default soil types, in vol/vol.
XRC(21)	DSDATA	The hydraulic conductivities of the 21 default soil types, in inches/hr.
XSW1	SIMULA	The daily excess soil water in the top subprofile in inches.
XSW2	SIMULA	The daily excess soil water in the second subprofile from the top, in inches.
XSW3	SIMULA	The daily excess soil water in the third subprofile from the top, in inches.
XWP(21)	DSDATA	The wilting points of the 21 default soil types, in vol/vol.
X1	CONVRG	The computed value to be checked by the convergence procedure.
X2	CONVRG	The previous estimate of the computed value that was produced by the convergence procedure.
XYR	OUTAVG	The number of years of simulation.
YEAR	LEAP	The year of simulation.
YSNO	SIMULA	The snow water storage of yesterday, in inches.
YSWUL1	SIMULA	The soil water storage of yesterday in the top subprofile, in inches.
YSWUL2	SIMULA	The soil water storage of yesterday in the second subprofile from the top, in inches.
YSWUL3	SIMULA	The soil water storage of yesterday in the third subprofile from the top, in inches.
ZRAIN(10)	MCDATA	The ten precipitation values on a line of data, in inches.

APPENDIX C

ORGANIZATION OF THE HELP MODEL

The HELP program consists of a hierarchial series of subroutines. The main program directs the input options, starts the simulation, and stops the program as shown in Figure C-1. Subroutine SIMULA controls the simulation run and output by sequentially calling a series of subroutines as shown in Figure C-2. Calculation of daily values for temperature, insolation, and leaf area index is controlled by subroutine READCD as shown in Figure C-3. The water routing techniques used for simulation are conducted by subroutine DRAIN as shown in Figure C-4. The functions of each of the subroutines are described briefly below.

MAIN

MAIN is the main program that directs control to various subroutines for entering climatologic data, soil characteristics and design information, and running the simulation.

ANSWER

Subroutine ANSWER reads a record of input that requires an input of either YES or NO, and then sets the variable IANS to equal 0 if the input is YES, and to equal 1 if the input is NO.

AVROUT

Subroutine AVROUT contains a water routing and storage algorithm that allows water to drain vertically from upper to lower segments. Darcy's Law, conservation of mass and the assumption of free drainage out of each segment are incorporated into the method of solution. A moisture balance is computed for each segment at the midpoint of the routing time interval (DT). An a priori estimate of the drainage rate from the bottom segment of the profile is used to compute the moisture balance in the bottom segment. The first estimate of the drainage rate from the bottom segment is that computed in the previous time step. If that estimate is not acceptably close to the subsequent estimate from subroutine LATFLO, an improved estimate is obtained by subroutine CONVRG.

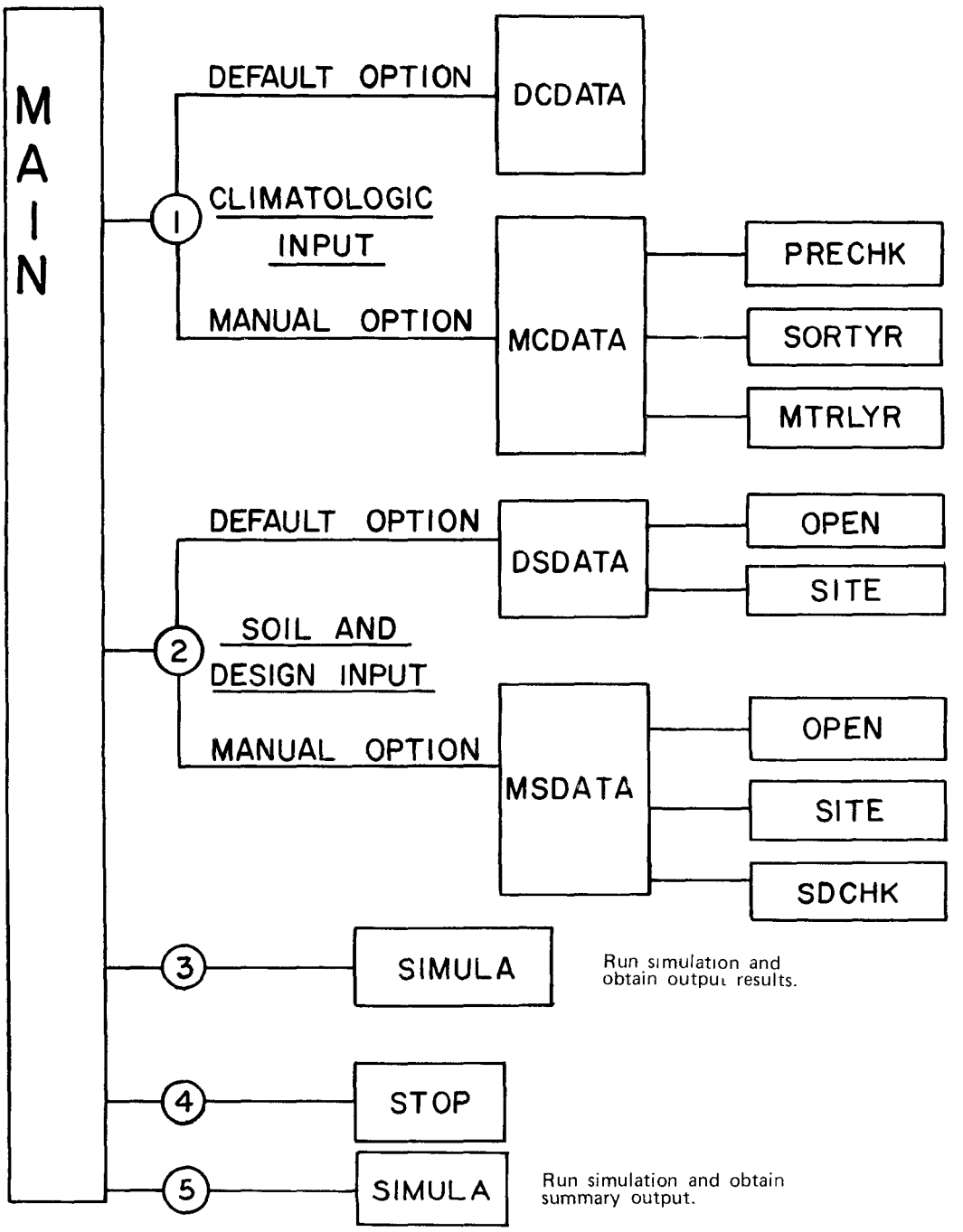

Figure C-1. Overall Program Control.

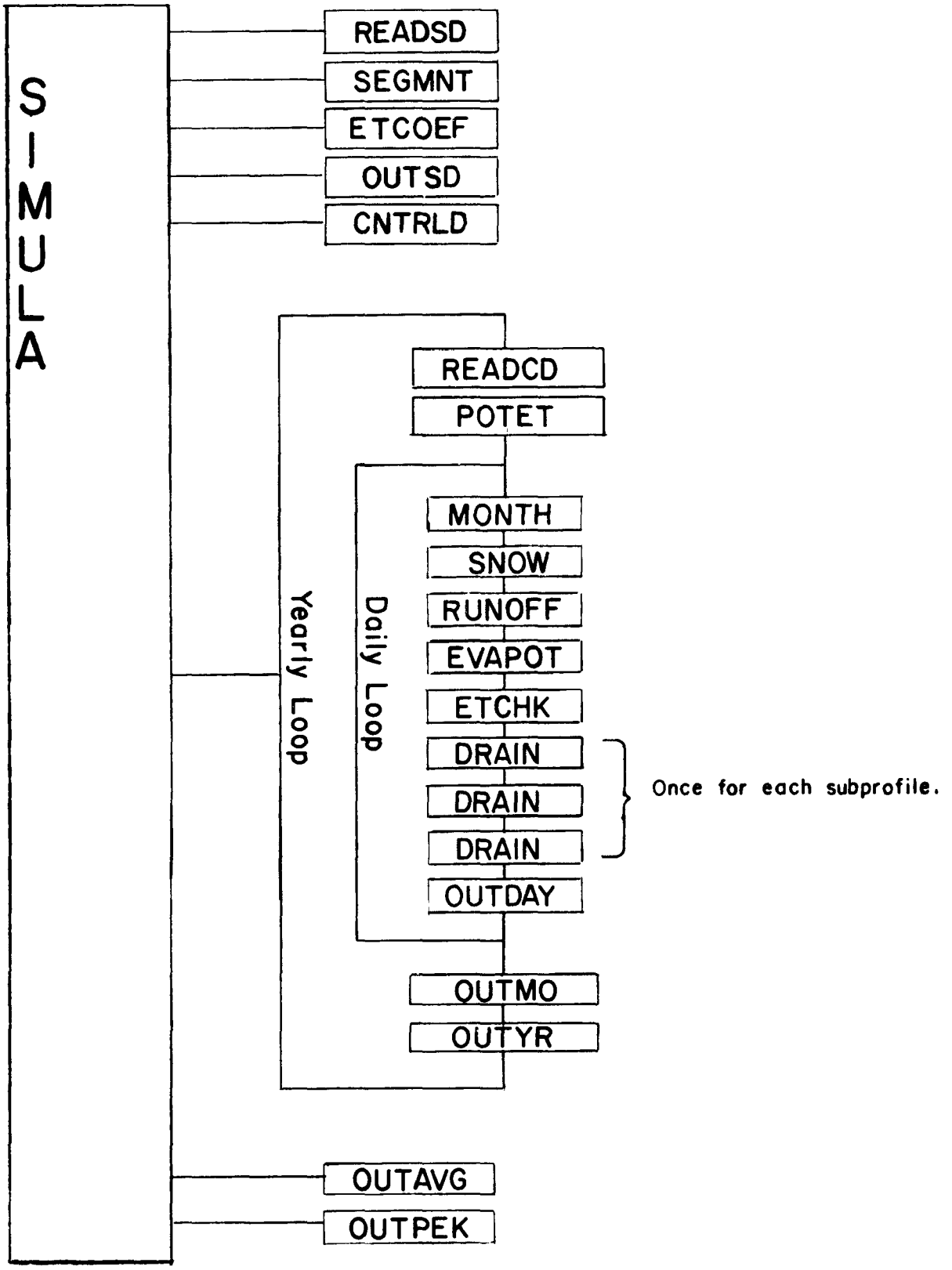

Figure C-2. Subroutines Controlled by SIMULA.

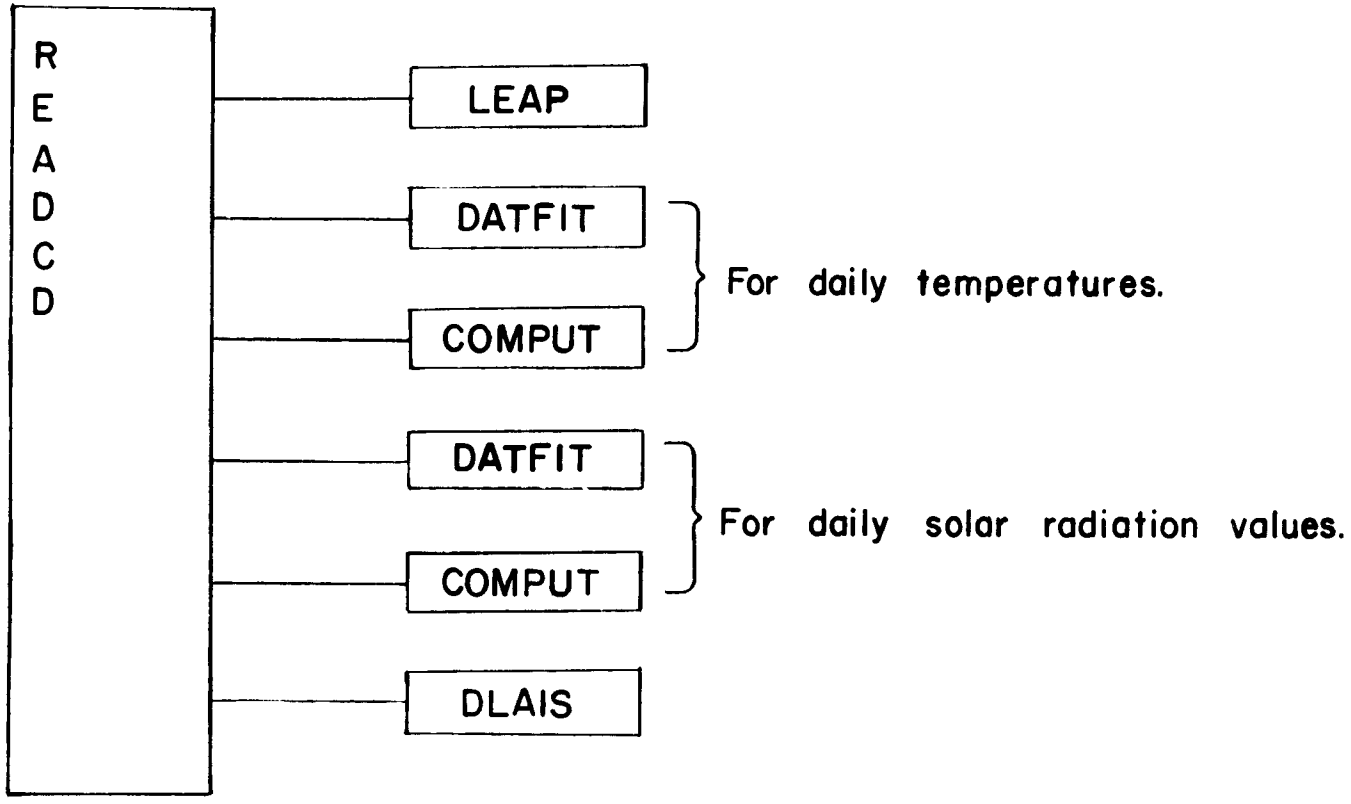

Figure C-3. Subroutines Controlled by READCD.

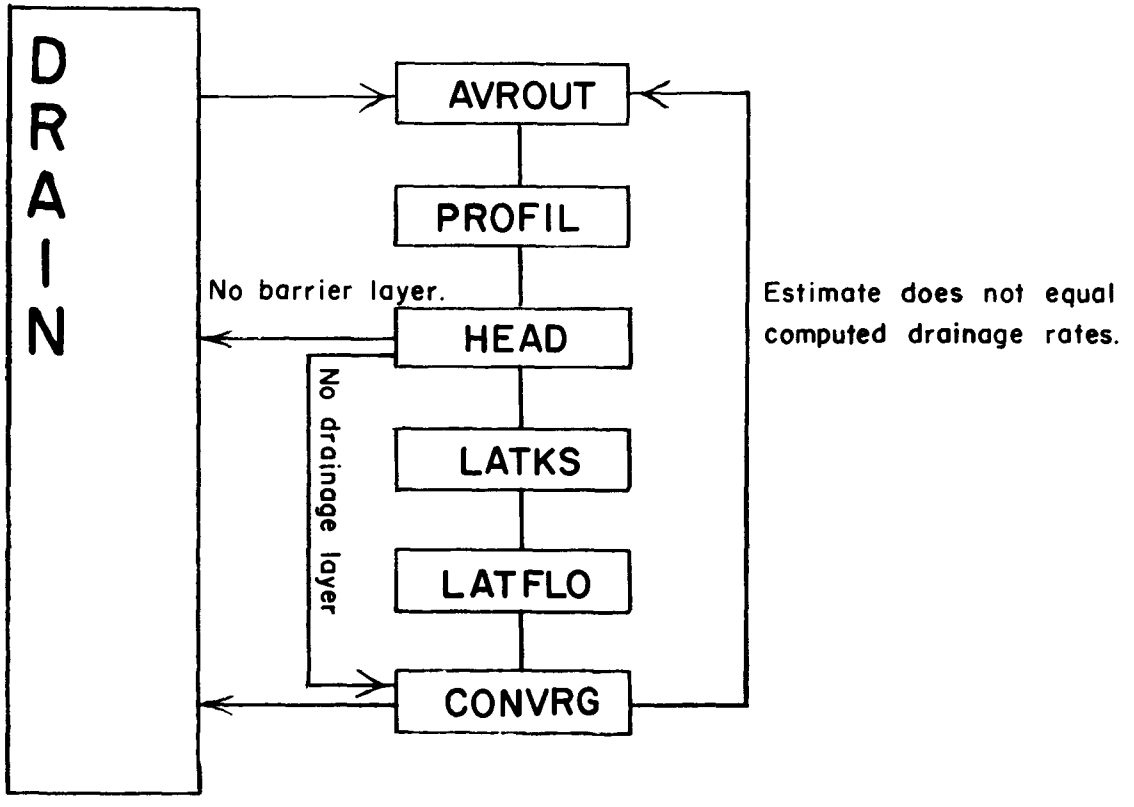

Figure C-4. Subroutines Controlled by DRAIN.

CNTRLD

Subroutine CNTRLD sets control variables describing the location of the subprofiles as being part of the cover or the waste, liner, and drainage system. These control variables are used in the output routines to identify simulation results.

COMPUT

The function subprogram COMPUT computes values from the equations of smooth harmonic curves derived from a curve fitting method. The equations fit mean monthly values of temperature and insolation with smooth curves having annual periods. These equations are used to determine mean daily temperature and insolation.

CONVRG

Subroutine CONVRG compares the previous estimate of drainage rate with the current estimate of drainage rate. If consecutive estimates are not within a preset tolerance, a new estimate is computed and returned to subroutine AVROUT.

DATFIT

Subroutine DATFIT determines the equations of smooth harmonic curves, which pass through the 12 mean monthly values of temperature and insolation for each year of simulation. These equations are used in subroutine COMPUT to compute daily values for temperature and insolation.

DCDATA

Subroutine DCDATA reads the data for default climatologic input.

DLAIS

Subroutine DLAIS computes daily potential changes in the leaf area index for a year of simulation.

DRAIN

Subroutine DRAIN divides each day into a preset number of equal time intervals, ITER, to improve the accuracy of the lateral drainage algorithm. The program computes average daily values for gravitational head in the profile, the lateral drainage rate, and the rate of percolation through the barrier layer. Soil moisture estimates returned from this program are not average daily values, but estimated moisture contents corresponding to the

midpoint of the last time step for each day. Computations are performed by calling subroutines AVROUT, PROFIL, HEAD, LATKS, LATFLO, and CONVRG in a loop that terminates when a convergence criterion is satisfied.

DSDATA

Subroutine DSDATA reads soil textures, layer descriptions, and layer thicknesses for the default soil characteristics input option.

ETCHK

Subroutine ETCHK examines the daily soil water content of the evaporative zone and recalculates daily plant transpiration when plant evaporative demand is high and soil water content is low.

ETCOEF

Subroutine ETCOEF computes the effective evaporation or transmissivity coefficient of the evaporative zone and the upper limit for stage one soil evaporation.

EVAPOT

Subroutine EVAPOT computes daily surface evaporation, soil evaporation, and potential plant transpiration. The subroutine then determines how the total evapotranspirative demand is distributed among the seven segments of the evaporative zone.

HEAD

Subroutine HEAD computes the gravitational head available in the profile to drive lateral flow and percolation through the barrier. The computation proceeds from the top of the barrier layer accumulating head from saturated segments. When a segment is encountered in which the moisture content is lower than the total porosity, the appropriate fraction of the segment thickness is added to the estimate of head and the procedure ends.

LATFLO

Subroutine LATFLO computes the lateral flow rate based on a linearization of the Boussinesq equation. All computations are performed at the midpoint of the time step.

LATKS

Subroutine LATKS computes the effective lateral hydraulic conductivity for the saturated portion of the profile. The effective conductivity is a thickness-weighted average of the hydraulic conductivities of the segments or fraction of segments used in the head computation.

LEAP

The integer function subprogram LEAP determines whether the year being simulated is a leap year.

MCDATA

Subroutine MCDATA reads precipitation input for the manual climatologic input option.

MONTH

The integer function subprogram MONTH determines the month of a year for a Julian date given an indicator as to whether the year is a leap year.

MSDATA

Subroutine MSDATA reads user input for runoff curve number, soil characteristics, layer descriptors, and layer thicknesses.

MTRLYR

Subroutine MTRLYR reads user input for mean monthly temperature and insolation, leaf area index, winter cover factor, and root zone depth.

OPEN

Subroutine OPEN reads user input for SCS runoff curve number and daily potential runoff fraction when the waste cell of the landfill is open.

OUTAVG

Subroutine OUTAVG calculates average monthly and annual results from the monthly and annual results of the simulation and then prints the averages.

OUTDAY

Subroutine OUTDAY prints daily results of the simulation.

OUTMO

Subroutine OUTMO prints monthly totals of the simulation results.

OUTPEK

Subroutine OUTPEK prints peak daily results of the simulation.

OUTSD

Subroutine OUTSD prints the input soil characteristics and design information.

OUTYR

Subroutine OUTYR prints annual totals of the simulation results.

POTET

Subroutine POTET computes daily potential evapotranspiration values for a year of simulation.

PRECHK

Subroutine PRECHK is used to check and correct precipitation values for manual climatologic input.

PROFIL

Subroutine PROFIL checks each profile segment, beginning at the bottom of the profile, for moisture content greater than the pore space available in the segment. When excess moisture is encountered in a segment, the segment moisture content is set equal to the total porosity of the segment and the excess moisture is distributed to the segment above.

READCD

Subroutine READCD reads the climatologic data files one year at a time during the simulation and prints the climatologic input.

READSD

Subroutine READSD reads the data file containing the soil characteristics and design information.

RUNOFF

Subroutine RUNOFF determines the daily storage retention parameter and computes the daily runoff.

SCAN

Subroutine SCAN examines an array of 76 alphanumeric characters, which are read from interactive input, and converts the array into an array of ten floating point values. SCAN is used for reading all numeric inputs from the user.

SDCHK

Subroutine SDCHK is used to check and correct soil characteristics and design information for the manual input option.

SEGMNT

Subroutine SEGMNT divides the landfill profile into segments and assigns soil characteristics to the segments. This subroutine also assigns the initial soil water contents of the segments.

SIMULA

Subroutine SIMULA directs the simulation, calling subroutines to read data, print input, compute water budget components, and print output. The accounting procedures for the water budget are performed in this subroutine.

SITE

Subroutine SITE reads user input for surface area, drainage slopes, and maximum drainage distances.

SNOW

Subroutine SNOW computes daily snow storage and daily snowmelt.

SORTYR

Subroutine SORTYR sorts the years of precipitation data into chronological order.

APPENDIX D

COMPARISON WITH RESULTS OF DRAINFIL MODEL

Both the HELP and DRAINFIL[a] models were developed to simulate the hydrologic performance of landfills. The two models are similar with respect to the manner in which lateral drainage is estimated, but are otherwise quite different with respect to the solution techniques employed. Data requirements are generally similar, except that DRAINFIL uses hourly precipitation data while HELP requires only daily total precipitation. In order to compare results produced by the models, simulations were performed for both a landfill cap (cover) system and a liner/drain system. The designs selected were based on draft design guidance documents[b] prepared by the U.S. Environmental Protection Agency. Historical precipitation data for Seattle, Washington were used for all the simulations.

INPUT

Three types of input are used by the HELP model: climatologic and vegetation data, design information, and soil characteristics. Input data are summarized below.

Climatologic Input

The climatologic and vegetation input are described below and partially listed in Tables D-1, and D-2.

Precipitation:	25 years of daily values (1951 to 1975) for the open landfill and 21 years of daily values (1955 to 1975) for the landfill cap
Temperature:	One set of 12 mean monthly values (see Table D-1)
Solar Radiation:	One set of 12 mean monthly values (see Table D-1)

---

a Skaggs, R. W. Modification to DRAINMOD to consider drainage from and seepage through a landfill. Draft Report, U.S. Environmental Protection Agency, Cincinnati, OH, 1982. 21 pp.

b U.S. Environmental Protection Agency. Draft RCRA Guidance Document, Landfill Design, Liner Systems, and Final Cover. Washington, DC, 1982. 33 pp.

TABLE D-1. TEMPERATURE AND SOLAR RADIATION DATA

Month	Mean Monthly Temperature (degrees Fahrenheit)	Mean Monthly Solar Radiation (langleys/day)
January	40.13	69.80
February	41.08	148.61
March	45.08	267.86
April	51.07	395.57
May	57.45	497.55
June	62.49	546.46
July	64.87	529.20
August	63.92	450.39
September	59.92	331.14
October	53.93	203.42
November	47.55	101.45
December	42.50	52.54

Leaf Area Index:	One set of 13 values describing a year, particularly the growing season; typical of a poor grass for the cap and of bareground for the open waste cell (see Table D-2)
Winter Cover Factor:	One value describing the leaf area index of dormant winter cover (see Table D-2)
Evaporative Zone Depth:	6 inches for a poor grass (for landfill cap) and 2 inches for bareground (for open site),

Design Information

The design information for the landfill cap and liner/drain system are summarized below.

Landfill Cap:	
Thickness of vegetative layer	2 ft
Thickness of drain layer	1 ft
Thickness of barrier soil layer	2 ft
Slope of barrier soil layer	3%
Maximum drainage distance	175 ft
SCS runoff curve number	50, poor runoff potential
Liner/Drain System:	
Thickness of waste layer	9 ft
Thickness of drain layer	1 ft
Thickness of barrier soil layer	2 ft
Slope of barrier soil layer	2%
Maximum drainage distance	25 ft
SCS runoff curve number	20, no runoff permitted

Soil Characteristics

The soil properties of the various layers are as follows:

Top Foot of Vegetative Layer:	
Porosity	0.5 vol/vol
Field capacity	0.47 vol/vol
Wilting point	0.15 vol/vol
Hydraulic conductivity	1.417×10^{-1} in./hr
Evaporation (transmissivity) coefficient	4.8 mm/day$^{0.5}$
Bottom Foot of Vegetative Layer:	
same as above except	
Field capacity	0.45 vol/vol
Drain Layers:	
Porosity	0.50 vol/vol
Field capacity	0.38 vol/vol

TABLE D-2. LEAF AREA INDICES AND WINTER COVER FACTORS

Date	Landfill Cap Leaf Area Index	Open Waste Cell Leaf Area Index
1	0.00	0.00
92	0.00	0.00
104	0.30	0.00
116	0.50	0.00
128	0.50	0.00
140	0.50	0.00
152	0.50	0.00
164	0.50	0.00
176	0.45	0.00
188	0.33	0.00
200	0.16	0.00
213	0.08	0.00
366	0.00	0.00
Winter Cover Factor	0.30	0.00

Wilting point	0.15 vol/vol
Hydraulic conductivity	14.17 in./hr
Evaporation (transmissivity) coefficient	3.3 mm/day$^{0.5}$
Barrier Soil Layers:	
Porosity	0.50 vol/vol
Field capacity	0.49 vol/vol
Hydraulic conductivity	1.417×10^{-4} in./hr
Waste Layer:	
Porosity	0.50 vol/vol
Field capacity	0.45 vol/vol
Wilting point	0.15 vol/vol
Hydraulic conductivity	1.417×10^{-1} in./hr
Evaporation (transmissivity) coefficient	3.8 mm/day$^{0.5}$

RESULTS AND DISCUSSION

Monthly and annual totals were generated for the following water budget components: precipitation, runoff, evapotranspiration, lateral subsurface drainage, and percolation through the bottom of the barrier soil layer. Annual totals of each component for the simulation period were averaged to obtain the average annual water budget. Table D-3 shows average annual water budgets produced by the HELP and DRAINFIL models for both the landfill cap and the open waste cell/liner/drain system. Results are given in inches (vol/landfill area) and in percent of the average annual precipitation.

The results produced by the two models are very similar; though, the HELP model tends to predict somewhat higher evapotranspiration than the DRAINFIL model. Consequently, the estimates of lateral drainage and seepage produced by the HELP model are somewhat smaller than estimates from the DRAINFIL model. Two causes for the difference in the estimate of evapotranspiration are apparent:

1) The HELP model estimates evapotranspiration by a modified Penman relationship while the DRAINFIL model uses a Thornwaithe relationship adjusted with pan evapotranspiration data.

2) The DRAINFIL model routes water vertically down the soil profile to the water table much faster than the HELP model; this removes water from the evapotranspiration zone of the soil profile before the water can be used to satisfy the evapotranspirative demand. Consequently, less evapotranspiration is predicted by DRAINFIL.

The seepage (percolation) estimate produced by the HELP model is less than the seepage predicted by the DRAINFIL model. As noted above, this is caused, at least in part, by the combination of the slower vertical drainage rates down and higher evapotranspiration predicted by the HELP model. Another cause of the smaller seepage estimates is the assumption used in the HELP model that barrier soil layers always remain at saturation, that is, that the drainable porosity of barrier soil layers is always zero. The DRAINFIL model assumes a drainable porosity of one percent. This assumption permits water to seep from a barrier soil layer after drainage into the layer ceases, thus yielding greater estimates of seepage. Both models use Darcy's Law to compute seepage (percolation) from barrier soil layers.

TABLE D-3. AVERAGE ANNUAL WATER BUDGETS PREDICTED BY THE HELP AND DRAINFIL MODELS

Average Annual Water Budget Component	HELP (Inches)	HELP (Percent[a])	DRAINFIL (Inches)	DRAINFIL (Percent[a])
For the Landfill Cap				
Precipitation[b]	37.70	100.00	37.70	100.00
Runoff	7.04	18.66	6.87	18.22
Evapotranspiration	16.59	43.99	15.74	41.75
Lateral Drainage	12.77	33.88	13.78	36.55
Seepage[c]	1.31	3.48	1.39	3.69
Total Accounted For[d]	37.71	100.01	37.78	100.21
For the Open Landfill				
Precipitation[e]	37.05	100.00	37.05	100.00
Runoff	0.00	0.00	0.00	0.00
Evapotranspiration	14.42	38.91	12.64	34.12
Lateral Drainage	21.58	58.25	23.57	63.62
Seepage[f]	1.04	2.80	1.11	2.99
Total Accounted For[d]	37.04	99.96	37.32	100.73

a Percent of average annual precipitation.
b For Seattle, WA, 1955-75.
c Percolation from base of cover.
d Excluding difference in initial and final soil moisture storage.
e For Seattle, WA, 1951-75.
f Percolation from base of landfill.

The estimate of evapotranspiration is somewhat sensitive to the specified thickness of the evaporative zone. In the simulations reported herein, evaporative zone depths were set to equal the minimum thickness reasonable for the specified vegetative conditions in order to estimate the maximum likely seepage and lateral drainage. As a result, evapotranspiration estimates were, perhaps, small for the design. Increasing evaporative depths would increase estimates for evapotranspiration, and decrease estimates of seepage, lateral drainage and, perhaps, runoff. To illustrate this point, the input evaporative zone depths were increased from 6 inches for the cap and 2 inches for the open site to 8 inches and 6 inches, respectively. The latter values are thought to be more typical. Results for simulations with these evaporative depths are shown in Table D-4. For the open site, evapotranspiration increased by about 1.7 inches and consequently, lateral drainage decreased by about 1.5 inches. Seepage decreased by about 0.2 inches. For the landfill cap, evapotranspiration increased by about 0.7 inches while lateral drainage, seepage and runoff decreased by about 0.5, 0.1 and 0.1 inches, respectively. Lateral drainage and seepage decrease because less water reaches the drainage and barrier soil layers when evapotranspiration increases. Increasing the evapotranspiration also decreases the soil moisture content near the surface which increases infiltration and reduces the runoff slightly.

The runoff potential of the landfill cap used in the simulations was very small, typical of well-cultivated agricultural fields. Most landfills would have considerably greater runoff potential. A SCS runoff curve number of 80 would generally be more representative than the 50 used in the simulation with the HELP model. The curve number of 50 was used to match the runoff potential used in the simulation with the DRAINFIL model. A small runoff potential was used to estimate the maximum likely seepage and lateral drainage as small evaporative depths were used. Using both 6- and 8-inch evaporative zone depths for the landfill cap, simulations were run using a runoff curve number of 80 to compare with the results shown in Tables D-3 and D-4. Results for these simulations are presented in Table D-5. The runoff increased by about 2.1 inches while lateral drainage, evapotranspiration and seepage decreased by about 1.8, 0.2 and 0.1 inches, respectively. Changes in the evapotranspiration on runoff mainly affect the estimates of lateral drainage in this design.

CONCLUSIONS

Simulation results produced by the HELP and DRAINFIL models were found to be very similar, although the HELP model predicted somewhat higher evapotranspiration and lower lateral drainage and seepage for the two cases investigated. Seepage, lateral drainage, and evapotranspiration estimates produced by the HELP model were found to be somewhat sensitive to the evaporative zone depth, a parameter which is difficult to estimate with confidence, and the SCS runoff curve number.

---

a Schroeder, P. R., J. M. Morgan, T. M. Walski, and A. C. Gibson. Hydrologic Evaluation of Landfill Performance (HELP) Model: Volume I. User's Guide for Version 1. Draft Report, Municipal Environmental Research Laboratory, U.S. Environmental Protection Agency, Cincinnati, OH, 1983.

TABLE D-4. AVERAGE ANNUAL WATER BUDGETS PREDICTED BY THE HELP MODEL WHEN TYPICAL EVAPORATIVE (ROOT) ZONE DEPTHS ARE USED

Average Annual Water Budget Component	For the Landfill Cap (Inches)	(Percent[a])	For the Open Landfill (Inches)	(Percent[a])
Precipitation	37.70[b]	100.00	37.05[c]	100.00
Runoff	6.93	18.38	0.00	0.00
Evapotranspiration	17.30	45.89	16.06	43.34
Lateral Drainage	12.23	32.45	20.10	54.25
Seepage	1.24[d]	3.29	0.87[e]	2.36
Total Accounted For[f]	37.70	100.01	37.03	99.95

a Percent of average annual precipitation.
b For Seattle, WA, 1955-75.
c For Seattle, WA, 1951-75.
d Percolation from base of cover.
e Percolation from base of landfill.
f Excluding difference in initial and final soil moisture storage.

TABLE D-5. AVERAGE ANNUAL WATER BUDGETS PREDICTED BY THE HELP MODEL WHEN A TYPICAL RUNOFF CURVE NUMBER IS USED FOR THE LANDFILL CAP

Average Annual Water Budget Component	6-inch Evaporative Depth (Inches)	(Percent[a])	8-inch Evaporative Depth (Inches)	(Percent[a])
Precipitation[b]	37.70	100.00	37.70	100.00
Runoff[c]	9.03	23.95	9.20	24.41
Evapotranspiration	16.41	43.52	17.08	45.32
Lateral Drainage	11.04	29.28	10.28	27.26
Seepage[d]	1.20	3.18	1.11	2.94
Total Accounted For[e]	37.68	99.93	37.68	99.93

a Percent of average annual precipitation.
b For Seattle, WA, 1955-75.
c SCS runoff curve number of 80.
d Percolation from base of cover.
e Excluding difference in initial and final soil moisture storage.

*U.S. GOVERNMENT PRINTING OFFICE : 1984 0-421-545/11813