United States
Environmental
Protection Agency

Office of Solid Waste
and Emergency Response
Washington, DC 20460

Office of Air
and Radiation
Washington, DC 20460

Office of Research
and Development
Washington, DC 20460

EPA/530-SW-87-021c
June 1987

EPA

Municipal Waste Combustion Study

Combustion Control of Organic Emissions

U.S. Environmental Protection Agency
Region V, Library
230 South Dearborn Street
Chicago, Illinois 60604

MUNICIPAL WASTE COMBUSTION STUDY: COMBUSTION CONTROL OF MSW COMBUSTORS TO MINIMIZE EMISSION OF TRACE ORGANICS

Final Report

by

W. R. Seeker, W. S. Lanier and M. P. Heap
Energy and Environmental Research Corporation
18 Mason
Irvine, CA 92718-4190

EPA Contract 68-02-4247

Project Officer: James Kilgroe
Combustion Research Branch
Air and Energy Engineering Research
U.S. Environmental Protection Agency
Research Triangle Park, NC 27711

Prepared for:

U.S. Environmental Protection Agency
Office of Research and Development
Washington, D.C. 20460

May 1987

This document has been approved for publication by the Office of Research and Development, U.S. Environmental Protection Agency. Approval does not signify that the contents necessarily reflect the views and policies of the Environmental Protection Agency, nor does the mention of trade names or commercial products constitute endorsement or recommendation for use.

ACKNOWLEDGMENTS

The authors wish to acknowledge the significant contribution of a number of individuals and organizations. Mr. Walter Niessen of Camp, Dresser, McKee, Inc. actively participated in data gathering and aided significantly to the ideas for combustion control strategy. We also wish to thank the representatives from the manufacturers with which we had detailed discussions. Without their willingness to share data and discuss combustion control strategy, this study would not have been possible. Finally, the authors want to acknowledge Jim Kilgroe (EPA-ORD) and Steve Greene (EPA-OSW) both for their financial support and for their technical guidance.

PREFACE

This document was prepared by Energy and Environmental Research Corporation as a task report under EPA's Fundamental Combustion Research Program III (Contract Number 68-02-4247). The FCR III program contract Project Officer was Mr. Jim Mulholland while Mr. James A. Kilgroe has served as Task Officer.

The work described in this document is part of a comprehensive Municipal Waste Combustion Study being carried out by EPA. This comprehensive evaluation is the result of a combined effort involving EPA's Office of Research and Development, Office of Solid Waste and Emergency Response and Office of Air and Radiation.

TABLE OF CONTENTS

Section		Page
ACKNOWLEDGEMENTS AND PREFACE		ii
1.0	EXECUTIVE SUMMARY	1-1
	1.1 Scope of the Study	1-1
	1.2 Combustion Control of Trace Organic Emissions	1-2
	1.3 A Combustion Control Strategy	1-4
	1.4 Recommended Research	1-6
2.0	INTRODUCTION	2-1
	2.1 Background	2-1
	2.2 Program Overview	2-5
	2.3 References	2-8
3.0	MUNICIPAL WASTE COMBUSTION PROCESSES	3-1
	3.1 Municipal Waste Characteristics	3-2
	3.2 Combustion Control of Pollutant Emissions from Municipal Waste Combustion Facilities	3-5
	3.2.1 Basic Combustion Concepts	3-6
	3.2.2 Criteria Pollutants	3-12
	3.2.3 Emission of Organic Compounds	3-12
	3.3 Combustion Control of Starved Air Systems	3-17
	3.4 RDF Systems	3-19
	3.5 References	3-20
4.0	POTENTIAL FOR AIR EMISSIONS	4-1
	4.1 Organic Emissions	4-1
	4.2 NO_x Formation and Control	4-8
	4.3 Particulate and Trace Metals	4-14
	4.4 Acid Gases	4-18
	4.5 References	4-18

TABLE OF CONTENTS (CONTINUED)

Section		Page
5.0	CURRENT PRACTICES IN MASS BURN TECHNOLOGY	5-1
5.1	Mass Burn Technologies	5-1
5.2	Deutsche Babcock Anlagen	5-5
5.3	Steinmueller	5-10
5.4	Von Roll	5-17
5.5	W+E Environmental Systems Ltd	5-23
5.6	Martin GmbH	5-27
5.7	Volund	5-34
5.8	Riley Takuma	5-37
5.9	Detroit Stoker	5-42
5.10	Combustion Engineering - De Bartolmeis	5-46
5.11	Westinghouse O'Connor	5-50
5.12	Basic Environmental Engineering Inc	5-54
5.13	Enercon/Vicon	5-58
5.14	References	5-61
6.0	CURRENT PRACTICES IN RDF COMBUSTORS	6-1
6.1	Types of RDF	6-1
6.1.1	RDF-1 or MSW	6-1
6.1.2	RDF-2 or Coarse RDF (c-RDF)	6-3
6.1.3	RDF-3 or Fluff RDF (f-RDF)	6-7
6.1.4	RDF-4 or Powdered RDF (p-RDF)	6-11
6.1.5	RDF-5 or Densified RDF (d-RDF)	6-11
6.2	Current RDF Projects	6-12
6.3	Firing Systems in Current RDF Projects	6-12
6.3.1	Detroit Stoker RDF Firing Systems	6-12
6.3.2	Combustion Engineering RDF Firing System	6-19
6.4	References	6-22

TABLE OF CONTENTS (CONTINUED)

Section		Page
7.0	CURRENT PRACTICES IN STARVED AIR (TWO-STAGE) COMBUSTORS	7-1
7.1	Starved Air Technologies	7-1
7.2	Consumat Systems	7-4
7.3	Synergy	7-10
7.4	References	7-12
8.0	COMBUSTION CONTROL OF ORGANIC EMISSIONS FROM MUNICIPAL WASTE COMBUSTORS (MWCs)	8-1
8.1	Design and Operating Problems - Failure Modes	8-1
8.1.1	Mass Burn Waterwall Failure Modes	8-2
8.1.2	Refuse Derived Fuel Spreader Stoker Failure Modes	8-8
8.1.3	Small, Multi-Staged Modular Unit Failure Modes	8-11
8.2	Combustion Strategy for Minimizing Emissions of Air Pollutants	8-13
8.3	Temperature	8-15
8.4	Combustion Air	8-21
8.4.1	Total Air Requirements	8-21
8.4.2	Primary Air Requirements	8-23
8.4.3	Distribution of Overfire or Secondary Air	8-24
8.4.4	Verification of Appropriate Air Distribution	8-30
8.5	Combustion Monitoring Requirements	8-32
8.6	System Control	8-34
8.7	Minimization of Hydrocarbon Species and Other Pollutants	8-35
8.8	References	8-37
9.0	HYDROCARBON CONTROL STRATEGY - SUMMARY	9-1
9.1	Combustion Practices for Trace Hydrocarbon Emission Control of municipal waste combustors	9-2
9.2	Research Recommendations	9-7
9.2.1	Combustion Control Guideline Definition and Verification	9-8
9.2.2	Mechanisms of PCDD/PCDF Formation and Destruction	9-11
9.2.3	Tradeoffs in Other Pollutants	9-11

LIST OF FIGURES

Figure		Page
2-1	Program approach	2-6
3-1	The LNC Steinmueller mass burn design features	3-7
3-2	Estimate of fuel bed thickness and accumulated inert layer (Run 18)	3-9
3-3	Gas compositions from fuel and probe 2 (Run 18)	3-10
3-4	Relationships of CO and O_2 for appropriate operating regions	3-13
3-5	Adiabatic equilibrium species distribution	3-16
3-6	Components of typical starved-air modular combustor	3-18
4-1	Hypothetical mechanisms of PCDD/PCDF formation chemistry	4-3
4-2	Thermal decomposition characteristics of selected organics under dilute (nonflame) conditions for 1 second (Dellinger et al. 1977)	4-6
4-3	Impact of temperature and fuel nitrogen on NO_x emissions for excess air conditions (calculated using EER kinetic set)	4-10
4-4	Application of reburning and de-NO_x schemes for NO_x control of mass burn MSW furnaces	4-13
4-5	Transformation of mineral matter during combustion of metal containing waste	4-17
5-1	Mass burning waste power plant at Widmer and Ernst at Bielefeld-Hertford, Germany	5-2
5-2	Deutsche Babcock Anlagen mass burn furnace design features	5-6
5-3	Deutsche Babcock furnace geometry selected based on refuse characteristics (DBA, 1986)	5-9
5-4	Relationship of CO and O_2 for appropriate operating regions (DBA, 1986)	5-11
5-5	The L&C Steinmueller mass burn design features	5-13
5-6	Steinmueller in-furnace testing and cold-flow modeling	5-16
5-7	Refuse combustion plant with von Roll two-pass boiler and flue gas scrubber	5-19
5-8	Details of Von Roll grate and feeding devices	5-22

LIST OF FIGURES (CONTINUED)

Figure		Page
5-9	W+E combustion system and overthrust grate design	5-24
5-10	Design features of Martin Refuse Combustors	5-29
5-11	Adaptation of secondary air injection to changed refuse conditions in Martin Systems	5-32
5-12	Martin Combustion Control System for mass burn combustors	5-33
5-13	Volund System mass burn design features	5-35
5-14	Cross sectional schematic of combustion zone on a Riley-Takuma mass burn plant	5-39
5-15	Cross-section of boiler with current design Detroit Stoker firing system	5-44
5-16	Design features of DeBartolomeis grate	5-48
5-17	Boiler cross-section of CE design using db grate and EVT boiler	5-49
5-18	Typical plant configuration using Westinghouse/O'Connor combustor	5-51
5-19	Cross-section of Westinghouse/O'Connor combustor	5-52
5-20	Process flow diagram of Basic Environmental Engineering modular mass burn technology	5-55
6-1	Albany, New York, Solid-Waste Energy-Recovery System (ANSWERS)	6-4
6-2	Cross-section of Albany, New York boiler plant firing c-RDF	6-5
6-3	Ames, Iowa, Resource Recovery System for production of fluff RDF (f-RDF)	6-8
6-4	Fluff RDF production system. Illustration is for system developed by Combustion Engineering	6-9
6-5	Trommel Screen for RDF size segregation	6-10
6-6	Side sectional view of Detroit Rotograte Stoker equipped with Detroit air swept refuse distributor spouts	6-15
6-7	Detroit Stoker Hydrograte™ with water cooled, vibrating, continuous-discharge ash-discharge grates	6-17
6-8	Detroit air swept refuse fuel distributor spout arranged with motorized rotary air damper	6-18
6-9	Combustion Engineering continuous ash discharge type RC Stoker for RDF	6-20
6-10	Combustion Engineering pneumatic RDF distributor	6-21

LIST OF FIGURES (CONTINUED)

Figure		Page
7-1	Evolution of U.S. vendor companies supplying starved-air waste-to-energy systems, including persons notably influencing system designs.	7-3
7-2	The standard Consumat module for energy-from-waste.	7-5
7-3	Internal transfer rams in primary chamber of typical Consumat facility	7-6
7-4	Theoretical temperature of the products of combustion, calculated from typical MSW properties, as a function of refuse moisture and excess air or oxygen (Hasselriis, 1986) .	7-7
7-5	Synergy two-stage municipal waste combustion process.	7-11
7-6	Synergy two-stage combustion saturate steam system.	7-13
8-1	Mass burn municipal waste combustor failure modes	8-3
8-2	Boiler sectional side of NASA/Hampton mass fired waste-to-energy facility.	8-7
8-3	Failure modes of RDF spreader-stoker systems.	8-9
8-4	Temperature distributions in an operating mass burn municipal waste combustor	8-16
8-5	Required temperature for destruction of intermediate organics.	8-18
8-6	Thermal decomposition characteristics of selected hydrocarbons.	8-20
8-7	Theoretical temperature of the products of combustion, calculated from typical MSW properties, as a function of of refuse moisture and excess air or oxygen (8,9)	8-22
8-8	Typical designs of overfire air systems	8-27
9-1	Research program to establish design guidelines based upon "Good Combustion Practice".	9-9

LIST OF TABLES

Table		Page
1-1	Good Combustion Practices for Minimizing Trace Organic Emissions From Mass Burn Municipal Waste Combustors (MWCs)	1-6
1-2	Good Combustion Practices for Minimizing Trace Organic Emissions from RDF Combustors	1-7
1-3	Good Combustion Practices for Minimizing Trace Organics Emissions from Starved-Air Municipal Waste Combustors (MWCs)	1-8
2-1	Summary of Organic Emission Ranges from Full-Scale Municipal Waste Combustor Facilities	2-4
2-2	Manufacturers Fact Finding	2-7
3-1	Current and Forecast Composition of Disposed Residential and Commercial Solid Waste (Weight Percent)	3-3
3-2	Ultimate Analysis of Typical MSW as Presented by Hickman et al. (1984)	3-4
4-1	Status of NO_x Control Options for Municipal Waste Combustors (MWCs)	4-12
4-2	Metals Present in MSW	4-16
5-1	Design Features of Deutsche Babcock Anlagen Systems	5-7
5-2	Design Features of Steinmueller Mass Burn Systems	5-14
5-3	Design Features of Von Roll Mass Burn Systems	5-20
5-4	Design Features of W+E Mass Fired System	5-25
5-5	Design Features of Martin Refuse Municipal Waste Combustors (MWCs)	5-30
5-6	Design Features of Volund Mass Burn Systems	5-36
5-7	Design and Operating Features of Riley-Takuma Technology	5-40
5-8	Design Features of Detroit Stoker Mass Burn Municipal Waste Combustors	5-45
5-9	Design Features of Basic Environmental Engineering Small Modular Mass Burn Technologies	5-56
6-1	ASTM Classification of Refuse Derived Fuels	6-2
6-2	Active RDF Projects	6-13

LIST OF TABLES (CONTINUED)

Table		Page
7-1	Selected Data on Small-Scale U.S. Systems Using the Starved-Air Design	7-2
8-1	Overfire Air Jet Configurations for Large Mass Burn Municipal Waste Combustors (MWCs)	8-26
9-1	Good Combustion Practices for Minimizing Trace Organic Emissions from Mass Burn Municipal Waste Combustors (MWCs)	9-4
9-2	Good Combustion Practices for Minimizing Trace Organic Emissions from RDF Municipal Waste Combustors (MWCs)	9-5
9-3	Good Combustion Practices for Minimizing Trace Organic Emissions from Starved-Air Municipal Waste Combustors (MWCs)	9-6

1.0 EXECUTIVE SUMMARY

1.1 Scope of the Study

This report is an assessment of combustion control of organic emissions from municipal waste combustors (MWCs). The information presented in this report was developed during a comprehensive, integrated study of municipal waste combustion. An overview of the findings of this study may be found in the Report to Congress on Municipal Waste Combustion. Other technical volumes issued as part of the Municipal Waste Combustion Study include:

- Municipal Waste Combustion Study: Report to Congress — EPA/530-SW-87-021A
- Municipal Waste Combustion Study: Emissions Data Base for Municipal Waste Combustors — EPA/530-SW-87-021B
- Municipal Waste Combustion Study: Combustion Control of Organic Emissions — EPA/530-SW-87-021C
- Municipal Waste Combustion Study: Flue Gas Cleaning Technology — EPA/530-SW-87-021D
- Municipal Waste Combustion Study: Costs of Flue Gas Cleaning Technologies — EPA/530-SW-87-021E
- Municipal Waste Combustion Study: Sampling and Analysis — EPA/530-SW-87-021F
- Municipal Waste Combustion Study: Assessment of Health Risks Associated with Exposure to Municipal Waste Combustion Emissions — EPA/530-SW-87-021G

- Municipal Waste Combustion Study: Characterization of the Municipal Waste Combustion Industry — EPA/530-SW-87-021H

- Municipal Waste Combustion Study: Recycling of Solid Waste — EPA/530-SW-87-021I

The objectives of this study were:

1. To determine the current state of combustion control of municipal solid waste combustion technology

2. To formulate a combustion control strategy based upon "best engineering practice" that will minimize the emission of trace organics from waste-to-energy plants

3. To define the research which is necessary to develop and verify this combustion control strategy.

Although the focus of this study was concerned with the best combustion practices which will minimize the emissions of organics, including polychlorinated dibenzo(p)dioxin and furans (PCDDs/PCDFs), the interrelationship with other pollutants such as particulate matter, metals, NO_x, other organics, and carbon monoxide was also considered. The study focused on the design of new units and the operation and monitoring of new and existing units from the viewpoint of the combustor/boiler subsystem. No consideration was given to the impact of the design and operation of air pollution control devices upon the emission of trace organic species because it was covered in the volume entitled "Flue Gas Cleaning Technology" (EPA/530-SW-87-021E).

1.2 Combustion Control of Trace Organic Emissions

Combustion control of organic species from three types of municipal solid waste combustors, was considered in this study:

1) Mass burning excess air (mass burning)
2) Starved air two-stage (modular)
3) Refuse-derived fuel firing (RDF)

RDF can be burned in fluidized bed combustors but they represent only a small fraction of the waste-to-energy systems either in service or planned. Thus, this technology was not considered.

Municipal waste, unlike fossil fuels, is extremely heterogeneous. Its composition varies with the seasons and is affected by weather thus, its calorific value can vary widely and many systems are therefore designed to handle wastes with heating values ranging from 3,800 to 6,000 Btu/lb. The size of MSW also varies and this affects the feed to the combustion device. The three incinerator types listed above have different design philosophies which enable them to take account of variation in fuel input properties which is imposed by the characteristics of MSW.

Mass burn excess air municipal waste combustors (MWCs) burn minimally treated MSW in a thick bed supported by a pusher grate. Sufficient air is provided in the bed region to burn the fuel, although combustion of the volatile gases is completed above the bed. Variation in fuel properties is counteracted by controlling the feed rate, grate speed and the amount and distribution of air which is supplied through and above the grate. In a starved-air two stage system the unit is divided into two distinct sections. The first section receives the waste and is operated with only 40 percent of the air needed for combustion, thus, it acts as a gasifier. The fuel rich effluent is burned in the second section which may contain heat exchange surfaces. Heat extraction is minimized in the first, fuel rich section. Pre-processing to produce a refuse derived fuel (RDF) is the third method used to take account of the heterogeneous nature of MSW. RDF can be burned alone, on a spreader stoker, in a fluidized bed or in combination with coal in stoker, pulverized coal or cyclone boilers or in combination with other fuels such as wood chips.

Thermodynamic equilibrium considerations indicate that under excess air conditions and the characteristic temperatures typical of municipal waste combustors (MWCs), emissions of organic species should be so low that they can be considered to be zero. However, measurements have been made showing that some plants have significant emissions of trace organic species some of which are toxic. The basis for combustion control of emissions of organics from municipal waste combustors (MWCs) is to provide conditions whereby the combustion products can approach equilibrium. This requires that all combustion products are affectively mixed with oxygen at a temperature which is sufficiently high to allow the rapid destruction of all organic species.

Hydrocarbons, some of which may be toxic or which may be precursors to the formation of toxic hydrocarbons, can be formed during the combustion of MSW. The fuel is not completely mixed with air because of the heterogeneous nature of the fuel. Thus, fuel-rich pockets will exist and under these conditions hydrocarbons can be formed. However, kinetic considerations indicate that they can be destroyed rapidly in the presence of oxygen at elevated temperatures. The goal of combustion control is the complete destruction of all hydrocarbon species in the combustion system of municipal waste combustors (MWCs). Approaching this goal will minimize emission of potentially toxic species as well as other species which may be precursors and capable of forming toxic compounds downstream in cooler regions of the boiler or the air pollution control devices.

1.3 A Combustion Control Strategy

Strategies for good combustion can minimize the emission of hydrocarbon pollutants from the combustor/boiler subsystem of a waste-to-energy system. These practices will also contribute to the operability of the plant because they will reduce furnace corrosion rates and improve efficiency levels. Thus, while it may not be possible to entirely eliminate trace organic emissions it should be possible to operate cost-effective, waste-to-energy systems with minimal emissions of potentially toxic organics (fractional part per trillion emission concentration range).

This study synthesized "best combustion practices" from: theories on the basic mechanisms of PCDD/PCDF formation and destruction in combustion systems; information provided by manufacturers on the design of waste-to-energy systems, and operating/emissions data from specific plants. The practices are designed to:

1. Limit the formation of hydrocarbons
2. Maximize the destruction of these same compounds prior to the exit of the combustor/boiler should they be formed

As such, these practices restrict conditions which promote the formation of hydrocarbons. In addition, they ensure that the environment experienced by these hydrocarbons will promote the destruction of these compounds. Thus, the conditions within the combustor environment that satisfy these goals are:

- Mixing of fuel and air to minimize the existence of long-lived, fuel-rich pockets of combustion products

- Attainment of sufficiently high temperatures in the presence of oxygen for the destruction of hydrocarbon species

- Prevention of quench zones or low temperature pathways that will allow partially reacted fuel (solid or gaseous) from exiting the combustion chamber.

The development of "best combustion practices" to minimize emissions of trace organics from municipal waste combustors (MWCs) involves all of these elements:

- Design. Design the system to satisfy several criteria which will ensure that temperatures and the degree of mixing within the combustor are consistent with the minimization of formation and the maximization of destruction of the species of concern.

- Operation Control. Operate the system in a manner which is consistent with the design goal and provide facility controls which prevent operation outside on established operating envelope.

- Verification. Monitor to ensure that the system is continually operated in accordance with the design goals.

It is suggested that if all of these elements are satisfied, then the emission of hydrocarbons from the combustor of a municipal waste combustor (MWC) will be minimized.

This project has identified the components of each of these elements which make up the best combustion practices and that are expected to be important in the control of PCDDs and PCDFs trace organic emissions from municipal waste combustors (MWCs). In addition, preliminary recommendations have been made on the values of the individual components. Identification of the elements was based upon the current design practices that have been shown to restrict successfully trace organic emissions. The combustion control components are summarized in Table 1-1 for mass burn systems. It must be explained that the values presented in Tables 1-1, 1-2 and 1-3 are preliminary targets and require considerable verification to ensure their appropriateness. It is possible, for example, that the goals of the strategy can be satisfied by focusing solely on the verification elements. In this manner, an innovative scheme would be allowed provided that it could be demonstrated that the system satisfies the goals of flue gas CO, excess oxygen, furnace temperature and in-furnace CO concentration uniformity.

1.4 Recommended Research

The "best combustion practices" defined above for mass burn MSW, RDF and starved-air modular combustors were derived from an analysis of the available information which includes little direct evidence relating to the appropriateness of the preliminary target values recommended in Tables 1-1, 1-2 and 1-3. Further work is needed to better define and verify these recommendations. Further work is required in three major areas:

TABLE 1-1. GOOD COMBUSTION PRACTICES FOR MINIMIZING TRACE ORGANIC EMISSIONS FROM MASS BURN MUNICIPAL WASTE COMBUSTORS

Element	Component	Recommmendations
Design	Temperature at fully mixed height	1800°F at fully mixed height
	Underfire air control	At least 4 separately adjustable plenums. One each under the drying and burnout zones and at least two separately adjustable plenums under the burning zone
	Overfire air capacity (not an operating requirement)	40% of total air
	Overfire air injector design	That required for penetration and coverage of furnace cross-section
	Auxiliary fuel capacity	That required to meet start-up temperature and 1800°F criteria under part-load operations
Operation/ Control	Excess air	6-12% oxygen in flue gas (dry basis)
	Turndown restrictions	80-110% of design - lower limit may be extended with verification tests
	Start-up procedures	On auxiliary fuel to design temperature
	Use of auxiliary fuel	On prolonged high CO or low furnace temperature
Verification	Oxygen in flue gas	6-12% dry basis
	CO in flue gas	50 ppm on 4 hour average - corrected to 12% CO_2
	Furnace temperature	Minimum of 1800°F (mean) at fully mixed height across furnace
	Adequate air distribution	Verification Tests (see text Chapter 8 and 9)

TABLE 1-2. GOOD COMBUSTION PRACTICES FOR MINIMIZING TRACE ORGANIC EMISSIONS FROM RDF COMBUSTORS

Element	Component	Recommmendations
Design	Temperature at fully mixed height	1800°F at fully mixed height
	Underfire air control	As required to provide uniform bed burning stoichiometry (see text)
	Overfire air capacity (not necessary operation)	40% of total air
	Overfire air injector design	That required for penetration and coverage of furnace cross-section
	Auxiliary fuel capacity	That required to meet start-up temperature and 1800°F criteria under part-load operations
Operation/ Control	Excess air	3-9% oxygen in flue gas (dry basis)
	Turndown restrictions	80-110% of design - lower limit may be extended with verification tests
	Start-up procedures	On auxiliary fuel to design temperature
	Use of auxiliary fuel	On prolonged high CO or low furnace temperature
Verification	Oxygen in flue gas	3-9% dry basis
	CO in flue gas	50 ppm on 4 hour average - corrected to 12% CO_2
	Furnace temperature	Minimum of 1800°F (mean) at fully mixed height
	Adequate air distribution	Verification Tests (see text Chapter 8 and 9)

TABLE 1-3. GOOD COMBUSTION PRACTICES FOR MINIMIZING TRACE ORGANIC EMISSIONS FROM STARVED-AIR COMBUSTORS

Element	Component	Recommmendations
Design	Temperature at fully mixed height	1800°F at fully mixed height
	Overfire air capacity	80 percent of total air
	Overfire air injector design	That required for penetration and coverage of furnace cross-section
	Auxiliary fuel capacity	That required to meet start-up temperature and 1800°F criteria under part-load conditions
Operation/ Control	Excess air	6-12% oxygen in flue gas (dry basis)
	Turndown restrictions	80-110% of design - lower limit may be extended with verification tests
	Start-up procedures	On auxiliary fuel to design temperature
	Use of auxiliary fuel	On prolonged high CO or low furnace temperature
Verification	Oxygen in flue gas	6-12% dry basis
	CO in flue gas	50 ppm on 4 hour average - corrected to 12% CO_2
	Furnace temperature	Minimum of 1800°F at fully mixed plane (in secondary chamber)
	Adequate air distribution	Verification Tests (see text Chapter 8 and 9)

1. Guideline definition and verification
2. Mechanisms of PCDD/PCDF formation from MSW
3. Tradeoffs in other pollutants

2.0 INTRODUCTION

2.1 Background

This report is an assessment of combustion control of organic emissions from municipal waste combustors (MWCs). The information presented in this report was developed during a comprehensive, integrated study of municipal waste combustion. An overview of the findings of this study may be found in the Report to Congress on Municipal Waste Combustion. Other technical volumes issued as part of the Municipal Waste Combustion Study include:

- Municipal Waste Combustion Study: Report to Congress — EPA/530-SW-87-021A
- Municipal Waste Combustion Study: Emissions Data Base for Municipal Waste Combustors — EPA/530-SW-87-021B
- Municipal Waste Combustion Study: Combustion Control of Organic Emissions — EPA/530-SW-87-021C
- Municipal Waste Combustion Study: Flue Gas Cleaning Technology — EPA/530-SW-87-021D
- Municipal Waste Combustion Study: Costs of Flue Gas Cleaning Technologies — EPA/530-SW-87-021E
- Municipal Waste Combustion Study: Sampling and Analysis — EPA/530-SW-87-021F
- Municipal Waste Combustion Study: Assessment of Health Risks Associated with Exposure to Municipal Waste Combustion Emissions — EPA/530-SW-87-021G

- Municipal Waste Combustion Study: Characterization of the Municipal Waste Combustion Industry — EPA/530-SW-87-021H

- Municipal Waste Combustion Study: Recycling of Solid Waste — EPA/530-SW-87-021I

It is expected that the number of waste-to-energy plants within the United States will dramatically increase in the next decade. Some estimates indicate that the amount of waste being burned will increase by a factor of three by 1990. "Characterization of the Municipal Waste Combustor Industry" volume (EPA/530-SW-87-021H) provides a detailed analysis of current and projected MSW-to-energy capacity in the U.S.

One major concern that stems from proliferation of waste-to-energy plants is trace emissions of potentially toxic organic compounds. Of particular interest are the cogeners of PCDD and PCDF species, with major concern centering on 2,3,7,8 Tetrachlorodibenzo-p-dioxin (TCDD).

As part of EPA's comprehensive evaluation of municipal waste combustion, an emissions data base has been established and documented in the volume entitled "Emission Data Base for Municipal Waste Combustors." Table 2-1 has been extracted from that data base to illustrate the wide variability in PCDD and PCDF emissions from various facilities from which field test data is available. As shown, the emission rate for total PCDDs and total PCDFs vary by four to five orders of magnitude. Data forming the high end of theseaission range come from field tests performed on the facility at Hampton, Virginia (Haile, 1984); Scott Environmental Services, 1985; Nunn, 1983; Howes, 1982) and at Philadelphia, Northwest (Neulicht, 1985). Both of these facilities represent older system designs where the primary design concern was waste volume reduction. Data forming the low end of the emission range come from field tests performed on new facilities at Tulsa, Oklahoma (Seelinger, 1986), at Marion County, Oregon (Ogden Projects, 1986) and at the Westchester facility at Peekskill, New York (New York State Department of Environmental Conservation, 1986). Each of these new facilities' designs is

TABLE 2-1. SUMMARY OF ORGANIC EMISSION RANGES FROM FULL SCALE MUNICIPAL WASTE COMBUSTION FACILITIES[a]

Pollutant	Emission Concentration Range[b]		
	Mass Burn	Starved Air	RDF-Fired
2,3,7,8 TCDD, ng/Nm^3	0.018-62.5	<0.278-1.54	0.522-14.6
2,3,7,8 TCDF, ng/NM^3	0.168-448	58.5[c]	2.69[c]
TCDD, ng/Nm^3	0.195-1,160	1.24-43.7	3.47-258
TCDF, ng/Nm^3	0.322-4,560	15.0-345	31.7-679
PCDD, ng/Nm^3	1.13-10,700	77.2-1,550	64.4-2,840
PCDF, ng/Nm^3	0.423-14,800	118-1,760	164-9,110

[a] Results from commercial-scale facilities only.

[b] All concentrations are reported in units corrected to 12 percent CO_2.

[c] Data available for only one test.

based on extensive research and development efforts by the manufacturer to produce municipal waste combustors (MWCs) with high thermal efficiency and low trace organic emission rates.

The broad range in emission rate data illustrated in Table 2-1 and the success of modern, well-operated facilities in significantly reducing trace organic emission rates strongly suggests that municipal waste combustor design and operation are critical components in developing an overall organic emission control strategy. More direct evidence on the importance of facility design and operation is available through studies being conducted at the municipal waste combustor facility in Quebec, Canada. In those studies, an older facility was modified to reflect current low emission design philosophy. Exhaust emission measurements were obtained before (1984 tests) and after the facility modification (1986 tests). Preliminary results (Finkelstein, 1986) are indicated below:

	1984 Tests	1986 Tests
Total PCDD	800-3980 ng/Nm^3	12-205 ng/Nm^3
Total PCDF	100-1100 ng/Nm^3	49.3-336 ng/Nm^3

All of these data are corrected to 12 percent CO_2. In the modified facility tests (1986 tests) the indicated data range reflects operation of the facility in a "fine tuned" versus a "poor combustion" mode. Thus, the combination of combustion system design and operational tuning was sufficient to reduce total PCDD/PCDF from a high of nearly 4000 ng/Nm^3 to 12 ng/Nm^3. For this facility, combustion control was sufficient to reduce the PCDD/PCDF/ emission rate from near the top end to near the bottom end of the range indicated in Table 2-1. The goal of the current study is to gather and evaluate available information to help identify those components of engineering design, operation, and monitoring practices which minimize trace organic emissions from municipal waste combustor systems.

2.2 Program Overview

This volume of the comprehensive report series on municipal waste combustion is the culmination of a program having three major objectives:

- To determine the current state of combustion control of municipal waste combustion technology;
- To recommend design and operating approaches which will minimize emissions of trace organics; and
- To define the research which is necessary to develop and verify these design and operating approaches.

The focus of this volume is to present information on the combustion practices which will minimize the emissions of organic compounds including PCDDs and PCDFs. However, the interrelationship with other pollutants such as particulate matter, metals, NO_x, and carbon monoxide must also be established so that conditions are not followed that minimize emissions of PCDD/PCDF while increasing the emissions of other potentially harmful compounds. The focus of this volume is on the design of new units and the operation and monitoring of both new and existing units.

In Figure 2-1, the approach followed in the study that resulted in this volume is shown. The approach was designed in an attempt to make use of the knowledge base, which resides with those engineers who design and construct waste-to-energy facilities. Detailed, face-to-face meetings were held with fifteen of the major organizations associated with waste-to-energy operations in the United States and Europe. Four other U.S. manufacturing firms were contacted by telephone. Table 2-2 provides a listing of those organizations who contributed to this study with their technical expertise in a series of individual fact-finding meetings. Archival combustion literature and literature on PCDD/PCDF formation mechanisms made up the remainder of the input data base.

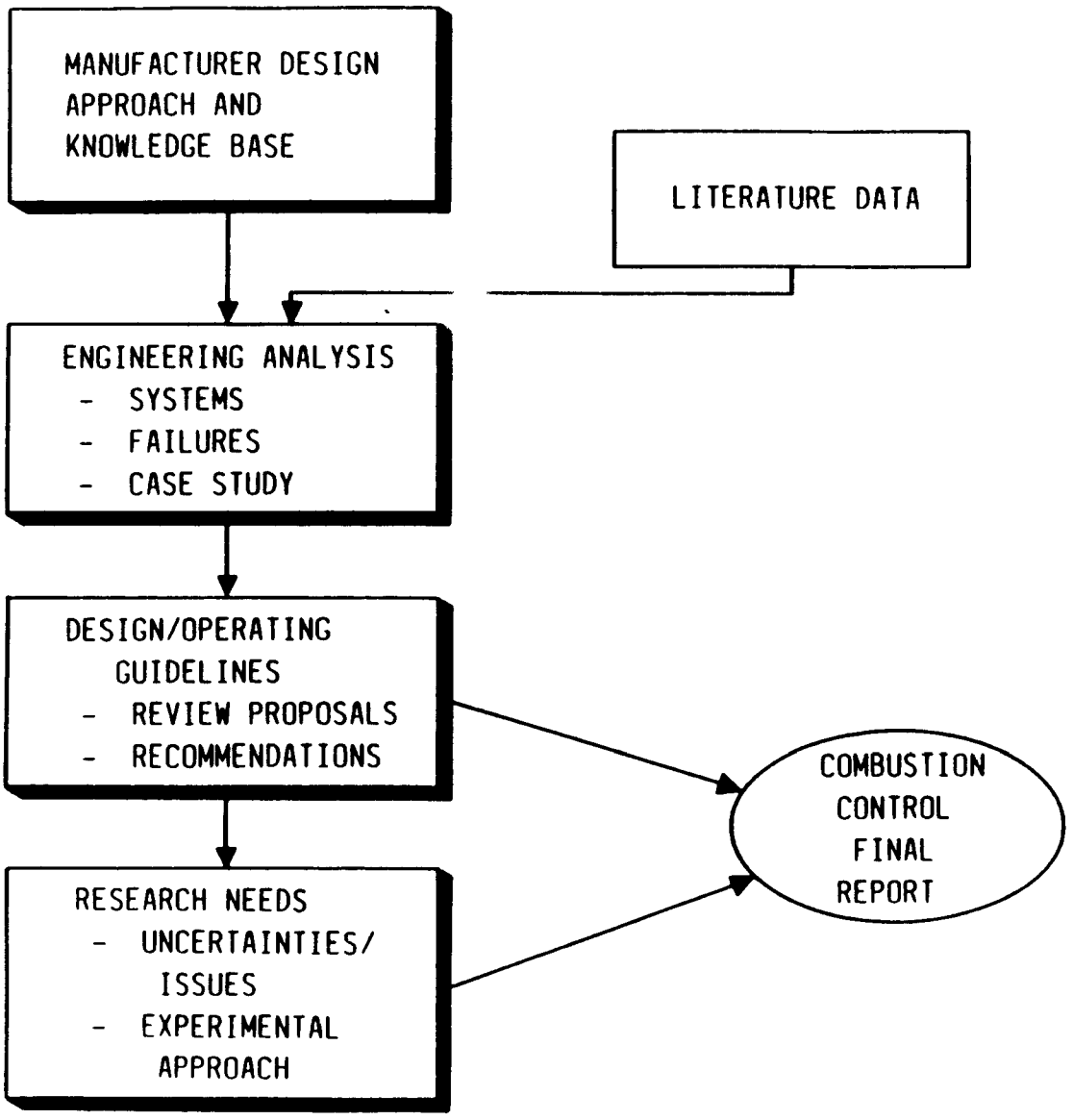

Figure 2-1. Program approach.

TABLE 2-2. MANUFACTURERS FACT FINDING

- EUROPEAN MANUFACTURERS
  - VOLUND (DENMARK)
  - DEUTSCHE BABCOCK (GERMANY)
  - STEINMULLER (GERMANY)
  - VON ROLL (SWITZERLAND)
  - WIDMER AND ERNST (SWITZERLAND)
  - MARTIN (GERMANY)
- OTHERS
  - DANISH EPA
  - PROF. HUTZINGER (UNIV. OF BAYREUTH)
  - ANRED (FRENCH AGENCY FOR WASTE RECOVERY AND DISPOSAL)
  - AMERICAN BOILER MANUFACTURERS ASSN.
- AMERICAN MANUFACTURERS
  - RILEY STOKER *
  - COMBUSTION ENGINEERING
  - WESTINGHOUSE/O'CONNOR
  - DETROIT STOKER
  - FOSTER WHEELER
  - BABCOCK & WILCOX *
  - CONSUMAT INCINERATION SYSTEMS
  - JOHN BASIC *
  - ENERCON *

* CONTACTED BY TELEPHONE ONLY

The second phase of the program was the analysis and interpretation of the available data on design and operating of municipal waste combustion equipment. This phase included an analysis of current practices in different types of municipal waste combustor systems and potential failures that might occur in both design and operation that could lead to the emission of trace organics. The engineering analysis phase also included an examination of case studies of incinerator facilities of older design and operating practices which were found to have higher PCDD/PCDF emissions than is common for modern units.

From the engineering analysis phase, recommendations were made on design and operating approaches that would reduce PCDD/PCDF/furan emissions and prevent system failure. This program phase included a review and critique on the draft guidance prepared by PEER Consultants (1986). Finally recommendations were made on research approaches to address those uncertainties and issues that cannot be addressed with the present knowledge base.

The remaining chapters cover overviews of the municipal waste combustion process and potential for air emissions (Chapters 3 and 4; current practice in different types of combustion systems (Chapter 5, 6 and 7; and approaches to combustion control to minimize PCDD/PCDF emissions (Chapter 8 and 9).

2.3 References

Finkelstein, A., et al. Presentations by Environment Canada at Municipal Solid Waste Incineration Research and Planning Meeting. Durham, North Carolina. December 9-11, 1986.

Haile, C. L., et al. Assessment of Emissions of Specific Compounds from a Resource Recovery Recovery Municipal Refuse Incinerator (Hampton, Virginia). EPA-560/5-84-002. June 1984.

Howes, J. E., et al. Characterization of Stack Emissions from Municipal Refuse-to-Energy Systems (Hampton, Virginia; Dyersburg, Tennessee; and

Akron, Ohio). Prepared by Battelle Columbus Laboratories for U.S. Environmental Protection Agency/Environmental Research Laboratory. 1982.

Neulicht, R. Emission Test Report: City of Philadelphia Northwest and East Central Municipal Combustors. Prepared for U.S. Environmental Protection Agency/Region III by Midwest Research Institute. October 1985.

New York State Department of Environmental Conservation. Emission Source Test Report - Preliminary Test Report on Westchester RESCO. January 8, 1986.

Nunn, A. B., III. Evaluation of HCl and Chlorinated Organic Compound Emissions from Refuse Fired Waste-to-Energy Systems (Hampton, Virginia; and Wright-Patterson Air Force Base, Ohio). Prepared for U.S. EPA/HWERL by Scott Environmental Services. 1983.

Ogden Projects. Tulsa Waste-to-Energy Tests Show Low Dioxin. Coal and Synfuels Technology. September 1, 1986, p. 6.

PEER Consultants, Inc. Design and Operating Guidance to Minimize Dioxins and Other Emissions from Municipal Waste Combustors. Draft Report to EPA Office of Solid Waste Under EPA Contract 68-02-6940. May 19, 1986.

Scott Environmental Services. Sampling and Analysis of Chlorinated Organic Emissions from the Hampton Waste-to-Energy System. Prepared for The Bionetics Corporation. May 1985.

Seelinger, R., et al. Environmental Test Report (Walter B. Hall, Resource Recovery Facility, Tulsa, Oklahoma). Prepared by Ogden Projects, Inc. for Tulsa City County Health Department. September 9, 1986.

3.0 MUNICIPAL WASTE COMBUSTION PROCESSES

The current report considers combustion control of organic species from three types of municipal waste combustors, namely:

- Mass-burning excess air (mass burning)
- Starved air two-stage (modular)
- Refuse derived fuel firing (RDF),

The mass-burning excess air and starved-air two stage categories include the combustion systems which burn raw municipal solid waste. Descriptions of the hardware and design features offered by various mass-burn and modular system suppliers are presented in Chapters 5 and 7 respectively. Processes have been developed which convert raw municipal solid waste into a more uniform fuel termed refuse derived fuel (RDF). RDF may be burned in a wide variety of furnaces including furnaces designed to fire coal or other fossil fuels such as wood or bagasse. RDF may also be co-fired with traditional fossil fuels. The processes to produce RDF and hardware configurations being built for combustion of RDF are presented in Chapter 6. Fluidized bed combustion systems are being built to burn RDF; however, as illustrated elsewhere in the comprehensive municipal waste combustion study, fluidized bed systems represent only a small portion of the current and projected refuse-to-energy market. Accordingly, this technology is not included in this report.

This chapter provides a brief review of the physical and chemical processes which occur during municipal waste combustion. The discussion illustrates the relationship between combustion process design and the emission rate of major pollutants of concern:

- Polycyclic organic matter (including PCDDs and PCDFs)
- Particulate matter
- Nitrogen oxides

Throughout the discussion, any reference to emissions rate or exhaust concentration will refer to conditions at the boiler exhaust, upstream of any flue gas air pollution control device (APCD).

3.1 Municipal Waste Characteristics

An understanding of municipal waste combustion must begin with an appreciation for the non-uniformity of MSW and the implication of that variability on combustion system design. Typical wastes might include paper products, food scraps, tin and aluminum cans, glass bottles, a wide range of plastic items, cloth items, floor sweepings, etc. During the summer months there will be plastic bags of yard clippings, and in the fall, dead leaves might replace grass clippings. Thus, a municipal waste combustor burning minimally treated waste must be able to handle a heterogeneous feed.

Characterizations of the constituency of MSW represent the average over large volumes of waste and may also include temporal averaging. Table 3-1 presents a characterization of MSW in the United States as reported by Franklin Associates (1986). Table 3-2 presents an ultimate analysis of MSW as reported by Hickman, et al., (1984). The higher heating value of the MSW described by both Franklin Associates and by Hickman, et al., was on the order of 4500 Btu/lb. This heating value is typically used to estimate mean operating conditions for mass burning municipal waste combustion facility designs, Riley Stoker (1986) and Detroit Stoker (1986); note that system performance guarantees are typically based on burning 4500 Btu/lb MSW, but that systems are designed to accommodate waste with average heating values which range from 3800 to 6000 Btu/lb. During rainy periods the heating value of MSW will decrease while dry periods or holiday seasons tend to result in MSW with increased heating value.

The municipal waste delivered to a resource recovery facility will have items of all sizes and shapes. Many municipal waste combustors remove bulky-oversize items such as refrigerators but the characteristic size is sufficiently large that unprocessed MSW must be burned on a grate. Feeding the MSW at a controllable rate and achieving uniform distribution across the

TABLE 3-1. CURRENT AND FORECAST COMPOSITION OF DISPOSED RESIDENTIAL AND COMMERCIAL SOLID WASTE (WEIGHT PERCENT)

Component	Year		
	1980	1990	2000
Paper and Paperboard	33.6	38.3	41.0
Yard Wastes	18.2	17.0	15.3
Food Wastes	9.2	7.7	6.8
Glass	11.3	8.8	7.6
Metals	10.3	9.4	9.0
Plastics	6.0	8.3	9.8
Wood	3.9	3.7	3.8
Textiles	2.3	2.2	2.2
Rubber and Leather	3.3	2.5	2.4
Miscellaneous	1.9	2.1	2.1
TOTAL	100.0	100.0	100.0

TABLE 3-2. ULTIMATE ANALYSIS OF TYPICAL MSW AS PRESENTED BY HICKMAN ET AL. (1984)

Ultimate Analysis	
Moisture	25.2
Carbon	25.6
Hydrogen	3.4
Oxygen	20.3
Nitrogen	0.5
Chlorine	0.5
Sulfur	0.2
Inorganics (ash)	24.4
	100.0

grate is difficult but necessary for proper operation. Mass burning facilities use cranes or front-end loaders to fill a loading chute. Hydraulic rams or pusher grate sections are used to load the MSW into the municipal waste combustor. Municipal waste combustion facilities use a thick fuel bed which tends to damp out effects due to the variability in fuel heating value and the inability to feed waste at a precise rate.

Once the MSW is in the furnace it is slowly moved by grate action toward the ash dump. For the MSW to burn it must be exposed to combustion air and heated. Combustion air is introduced both through the grate (underfire or undergrate air) and through air jets located above the bed (overfire air). To achieve fuel burnout the grate must be designed to agitate or stir the thick fuel bed as it moves the MSW from entrance to exit. Each of the grate manufacturers have developed their designs to accomplish this objective as discussed in Chapter 5.

3.2 Combustion Control of Pollutant Emissions from Municipal Waste Combustion Facilities

Chapter 4 provides a discussion of the potential air emissions from municipal waste combustors. The "emissions data base for municipal waste combustion" study provides a summary of available field test data from municipal waste combustion facilities including emissions data on criteria pollutants, acid gases, trace metals, and various hydrocarbons including toxic organic pollutants. An evaluation of PCDD and PCDF emissions from resource recovery facilities is available in a recent report provided to EPA by Camp Dresser and McKee (1986).

Details of the combustion process will impact directly the emission rate of several criteria pollutants (CO, NO_x and total particulate matter) and unburned hydrocarbons. In addition, they may impact the emission rate of trace metals. The following subsections will review a limited number of basic combustion concepts and then discuss the relationship between combustion processes and emissions. The focus of this discussion will be municipal waste combustion in mass burning, excess air facilities.

3.2.1 Basic Combustion Concepts

Figure 3-1 is a schematic of the grate region of a mass burning excess air municipal waste combustor. The waste-fuel enters the grate from the charging hopper (1) on the left and is moved toward the ash dump on the right. Table 3-2 presented an analysis for an MSW containing 24.4 weight percent ash. Ideally, the combustible constituents would be burned and the ash dumped from the system for landfilling. Air must be supplied to sustain the burning process. To completely burn the waste the theoretical air requirement is determined by the formula

$$W_a = 11.5\ C + 34.5\ (H-O/8) + 4.32S$$

where W_a is the mass of air per mass of fuel at stoichiometric conditions and C, H, and O and S are the weight fractions of carbon, hydrogen, oxygen and sulfur in the fuel, respectively. For one pound of MSW defined in Table 3-2, 3.25 pounds of air (approximately 42.8 cubic feet at 70°F and 1 atmosphere) are required to convert all of the carbon to CO_2, all of the hydrogen to water, and all of the sulfur to SO_2. If this quantity of air and MSW were mixed and burned to completion there would be a zero oxygen concentration in the exhaust. For a variety of reasons, including the variability of fuel characteristics, municipal waste combustion facilities are operated with significantly more than the theoretical air requirements, typically 70 to 100 percent excess air at full load. If a facility were burning the MSW defined in Table 3-2 with 100 percent excess excess air, the extra 3.25 pounds of air per pound of fuel would serve as a diluent to the combustion products. The pound of MSW burned would still release only 4500 Btu of heat and thus the temperature of the combustion gas would be decreased relative to that at lower excess air conditions.

The MSW defined in Table 3-2 contained approximately 25 percent moisture. As illustrated in Figure 3-1, many municipal waste combustors provide an arch over the grate region where the MSW enters the municipal waste combustor. Heat from the hot arch wall is transferred to the fuel bed, raising the MSW temperature enough to begin driving off the moisture. This

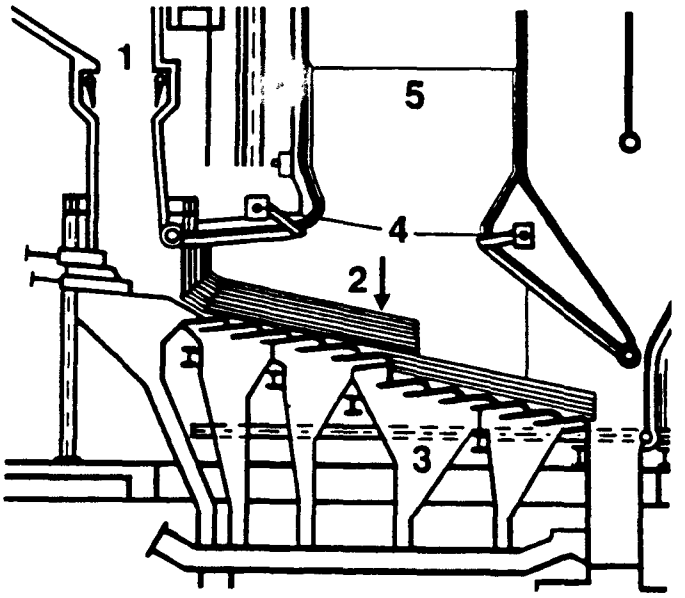

Figure 3-1. The L&C Steinmueller mass burn design features.

initial grate section is referred to as the drying grate. Undergrate air provided to this section will help to drive off the moisture, particularly if the air is preheated slightly. The important point is that the volatile matter released by the MSW in the initial grate section is mainly water and thus limited net heat release occurs in this region of the furnace.

The second section of grate shown in Figure 3-1 is referred to as the burning grate. Because much of the MSW moisture will be driven off in the drying grate region, the fuel entering the burning grate will have a significantly increased heating value. The fuel is still in a solid state and the bed may be upwards of a meter thick. Williams, et al., (1974) describe a series of pilot scale studies designed to define the controlling phenomena in thick burning beds of solid waste. That report also reviews several attempts to model the process. As described in that report (also see Niessen) et al., (1972)) the top layer of the fuel bed is ignited by radiation received from the hot combustion gas and the refractory lining of the lower furnace. This is followed by slow propagation of the ignition wave down into the fuel bed. The experimental data indicated that the underfire air flow rate and the fuel consumption rate were essentially in stoichiometric proportion but that the gas composition at the top of the fuel bed generally corresponded to the equilibration of the water-gas shift reaction:

$$CO_2 + H_2 = CO + H_2O$$

Figure 3-2 is taken from the Williams et al., report and shows the temporal variation in ignition front location, bed thickness and depth of accumulated inert. These data were obtained using a stationary bed of waste fuel and do not include the effect of fuel bed agitations by motion of the grate. The data do illustrate, however, many of the basic features of bed burning. Figure 3-3, compiled from data taken during the same experiment, illustrates gas composition measured by a sampling probe located within the fuel bed, 12 inches above the grate. As shown, the ignition front reaches the sampling location in approximately 2000 sec. Prior to that time the sampling probe only detects underfire air. As the ignition front moves closer to the grate,

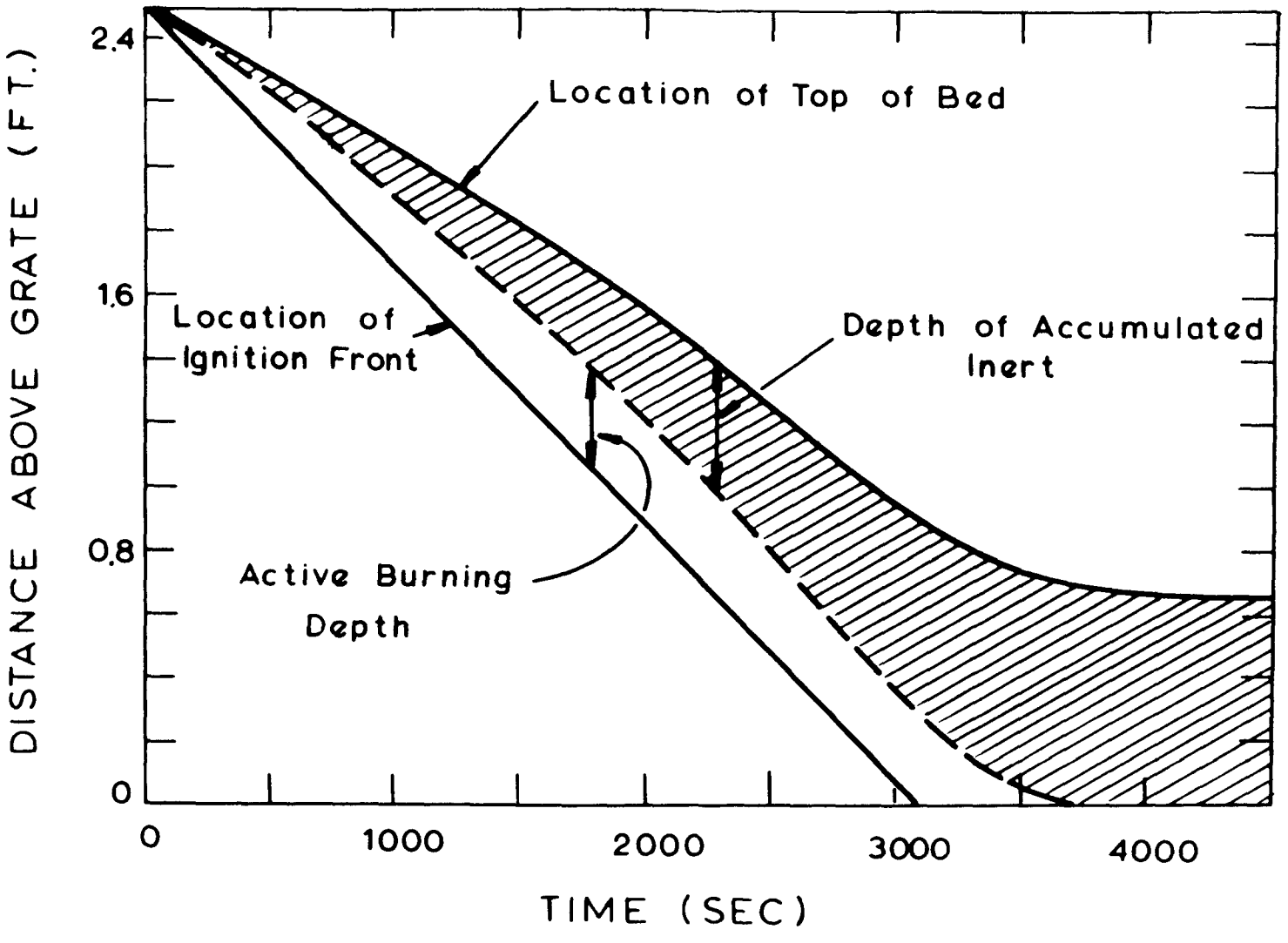

Figure 3-2. Estimate of fuel bed thickness and accumulated inert layer (Run 18).

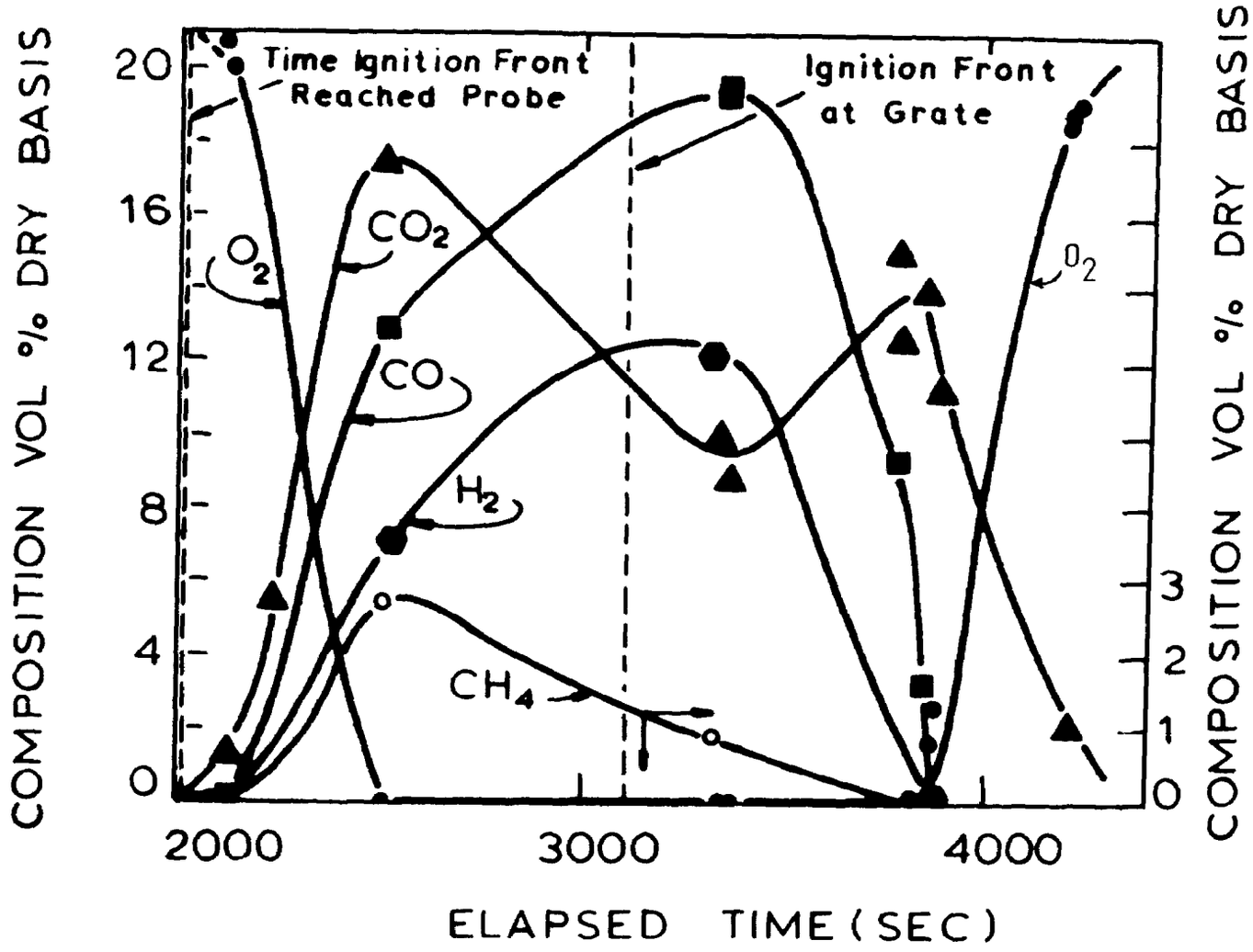

Figure 3-3. Gas compositions from fuel bed probe 2 (Run 18).

the local oxygen concentration falls with a commensurate increase in CO_2, CO, H_2 and CH_4. After approximately 2500 sec, the local O_2 concentration falls to zero indicating that the active burning region is below the sampling location.

The data trends shown in Figure 3-3 are consistent with viewing the MSW fuel bed as a gasifier. The process begins with reactions producing char, CO_2 and H_2O plus the vaporization of any free moisture. This is followed by endothermic reactions (reactions for which heat must be added) consisting of:

$$C + H_2O \rightleftharpoons CO + H_2 \quad \text{and}$$
$$C + CO_2 \rightleftharpoons CO + CO$$

Note in Figure 3-3 the continual increase in CO and H_2 concentration until approximately 3300 sec. while the local CO_2 concentration is seen to fall.

In an actual MSW municipal waste combustor, propagation of the ignition front and gas concentration profiles will be far more complex than described above. The bed material in the experiments by Williams, et al. (1974) was either simulated or real RDF and not MSW. Further, in actual municipal waste combustors the grate action is designed to mix and aerorate the MSW bed which results in dispersion of the ignition front. Regardless, the pilot-scale results illustrate several of the critical features of municipal waste combustion in the burning grate region. One of the critical features illustrated is the need for overfire air. The underfire air added to the burning grate coupled with grate agitation combined to define the rate at which the MSW is consumed. The gases leaving the fuel bed, however, contain a significant concentration of H_2, CO, and unburned hydrocarbons. Additional air must be mixed with that effluent to complete the conversion of combustibles to CO_2 and H_2O. The complete conversion is essential for maximizing combustion efficiency and for minimizing pollutant emissions. A portion of that air will be provided by underfire air which short circuits the fuel bed by channeling. The majority, however, must be provided by the overfire air supply.

3.2.2 Criteria Pollutants

Combustion process details can have a significant impact on the emission of several criteria pollutants including CO, NO_x and total particulate. Discussion of how combustion conditions impact on emission and control of NO_x, particulate matter and trace metals is contained in Chapter 4.

As noted in the previous section, substantial concentrations of CO will be released from the fuel bed. Controlling emission of CO from the facility exhaust requires that a controlled quantity of air be mixed with that effluent. Carbon monoxide is the most refractory species in the oxidation chain from hydrocarbon to CO_2 and H_2O. The dominant kinetic step for CO oxidation is:

$$CO + OH \longrightarrow CO_2 + H$$

Adding too much air to the effluent from the bed will depress the local gas temperature and the concentration of the OH radicals. If too little air is added, the probability is increased that pockets of gas from the burning grate will exit the high temperature regions without ever being mixed with oxygen. Figure 3-4 is taken from data provided in a meeting with Deutsche Babcock (see Section 5.2) and illustrates the existence of an appropriate operating range for minimum CO emissions.

3.2.3 Emission of Organic Compounds

One of the major objectives of the current report is to develop a framework for defining municipal waste combustor design and operating practices which minimize the emission of trace organic compounds. The organics of particular concern are the polychlorinated dibenzo-p-dioxins (PCDDs) and the polychlorinated dibenzofurans (PCDFs). Available field test data were outlined previously in Table 2-1 and indicated that PCDD emissions ranged from 1.13 to 10,700 ng/Nm^3 while PCDF emissions ranged from 0.423 to 14,300 ng/Nm^3. In developing a control strategy for these compounds, it is important to recognize that these emissions rates, including those at the

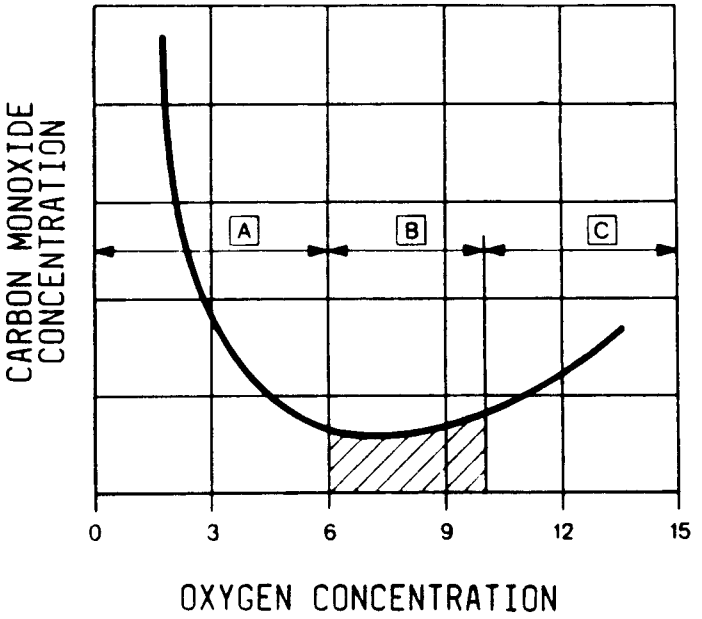

A - INSUFFICIENT AIR $C+\frac{1}{2}O_2 \rightarrow CO$

B - APPROPRIATE OPERATING REGION

C - "COLD BURNING"

Figure 3-4. Relationships of CO and O_2 for appropriate operating regions.

high end of the range, represent trace concentrations. The measured PCDD concentrations range from approximately 1 ppb (molar basis) to a fraction of a part per trillion.

Combustion begins with a fuel which is itself an organic and proceeds by destroying organics through a complex series of oxidation reactions. In the earlier discussion of basic combustion concepts, an equation was presented for calculating the amount of air theoretically required to completely burn a given mass of hydrogen fuel. That equation is based on determining the quantity of air required to oxidize fuel carbon to CO_2, fuel hydrogen to H_2O and fuel sulfur to SO_2. The actual burning process is propagated through a complex series of chemical reactions. Exhaust emission of organic compounds represents a failure to complete the oxidation reactions. Chapter 4.0 will discuss current theories/understanding of how PCDDs and PCDFs are formed and destroyed during municipal waste combustion. Generally, however, emission of organics will occur because of a failure to supply sufficient oxygen to all of the reacting gases or termination of the oxidation reaction through some quenching process.

As noted previously, definition of an acceptable PCDD or PCDF emission rate does not currently exist. Considering the fact that dioxin emission concentrations in the part per trillion range may be of concern, it is important to determine if there is a lower limit on emission reduction by combustion control. That limit, if any, may be examined through equilibrium calculations which predict the concentration of reaction product species in the absence of mixing or chemical kinetic limitations. Equilibrium calculations depend on the elemental composition of the mixture (moles of C, H, O, N, S, Cl, etc.), the reaction temperature, and the thermodynamic properties of product species.

Kramlich et al., (1984) studied the equilibrium product distribution for various chlorinated benzene/air mixtures. Since equilibrium calculations depend on elemental composition of the mixture rather than the chemical structure of the reactants, results from the Kramlich study should reflect limiting condition trends for municipal waste combustion. Sample results are

presented in Figure 3-5 as a plot of species concentration versus percent theoretical air assuming that the mixture is at the adiabatic flame temperature. The curve labeled THC represents the predicted total hydrocarbon concentration (sum of concentration of all hydrocarbon species present). For mixtures with at least 55 percent of the theoretical air requirements (and no heat loss) the equilibrium hydrocarbon concentration will be less than 1 ppt. As the mixture ratio becomes more fuel-rich, the presence of light hydrocarbons such as CH_4 (and later C_2H_2, etc.) are predicted. Part per trillion concentrations of benzene and tolune are not predicted until the mixture contains less than 30 percent of the theoretical air requirements. Prediction of ppt equilibrium concentrations of PCDD, PCDF or precursors such as chlorobenzenes and chlorophenols are restricted to even more fuel rich conditions.

Equilibrium calculations may also be used to evaluate other limiting case characteristics. Consider, for example, the situation when a pocket of organic gas does exist in the municipal waste combustor and is mixed into an oxidizing gas stream. That situation may be described by the overall reaction:

$$K_p = \frac{P_{CO_2}^{n_2} \; P_{H_2O}^{n_3}}{P_{organic} \; P_{O_2}^{n_1}}$$

where P represents the partial pressure of a given constituent and K_p is the equilibrium constant. The equilibrium constant is fundamentally related to a measurable thermodynamic property called the Gibbs Free Energy (ΔG) by:

$$K_p = EXP\ (\Delta G/RT)$$

where T is temperature and R is the Universal gas constant. If the organic compound is taken as a furan, G would be approximately 492 Kcal/mole (Stull, et al., 1969). For typical municipal waste combustor exhaust gas CO_2, H_2O and O_2 concentrations and for an assumed reaction temperature, the equilibrium concentration of furan can be calculated. For temperatures as

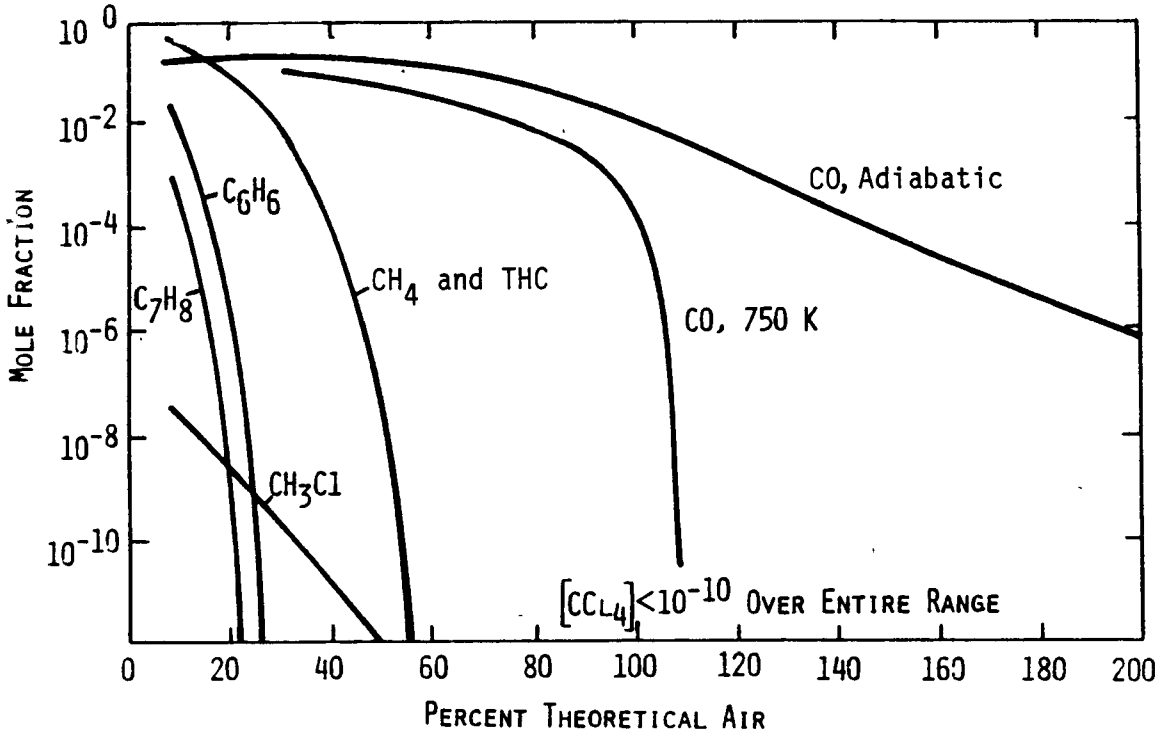

Figure 3-5. Adiabatic equilibrium species distribution.

low as 1000K, that equilibrium furan concentration is less than 10^{-100} mole fraction.

The above discussion illustrates two significant aspects of combustion control for trace organics. First, at reasonable temperature levels and under excess oxygen conditions, there is no thermodynamic barrier to achieving essentially zero emission level of trace organic. (There may, however, be mixing or kinetic barriers). Second, semi-volatile organic compounds are not thermodynamically stable under high temperature conditions, unless the mixture fuel/air ratio is very fuel-rich. The fact that organics such as PCDD and PCDF are emitted from municipal waste combustors indicates that chemical kinetic or mixing factors have prevented the gases from reaching the equilibrium condition. The chemical kinetic and mixing aspects will be considered in greater detail in later portions of this report.

3.3 Combustion Control of Starved Air Systems

Figure 3-6 illustrates the basic components of starved-air systems which are typically small (less than 100 ton/day capacity per unit). MSW is generally fed to the system with a front-end loader and charged into the primary chamber with a hydraulic ram. The typical solids residence time in the first stage chamber is on the order of 10 to 12 hours which helps to damp out variations in fuel heating value and the cyclic nature of the charging process.

The primary zone functions as a gasifier with only about 40 percent of the theoretical air requirements. The relatively large volume of this chamber coupled with low air flow results in low gas velocity and minimal particulate entrainment.

In mass burn, excess air systems, the effluent from the fuel bed contains significant concentrations of CO, H_2 and unburned hydrocarbon. There is, however, an overall excess air condition in the lower portion of the municipal waste combustor. In modular, starved air systems, the overall primary zone effluent is fuel-rich. Completion of the combustion process is

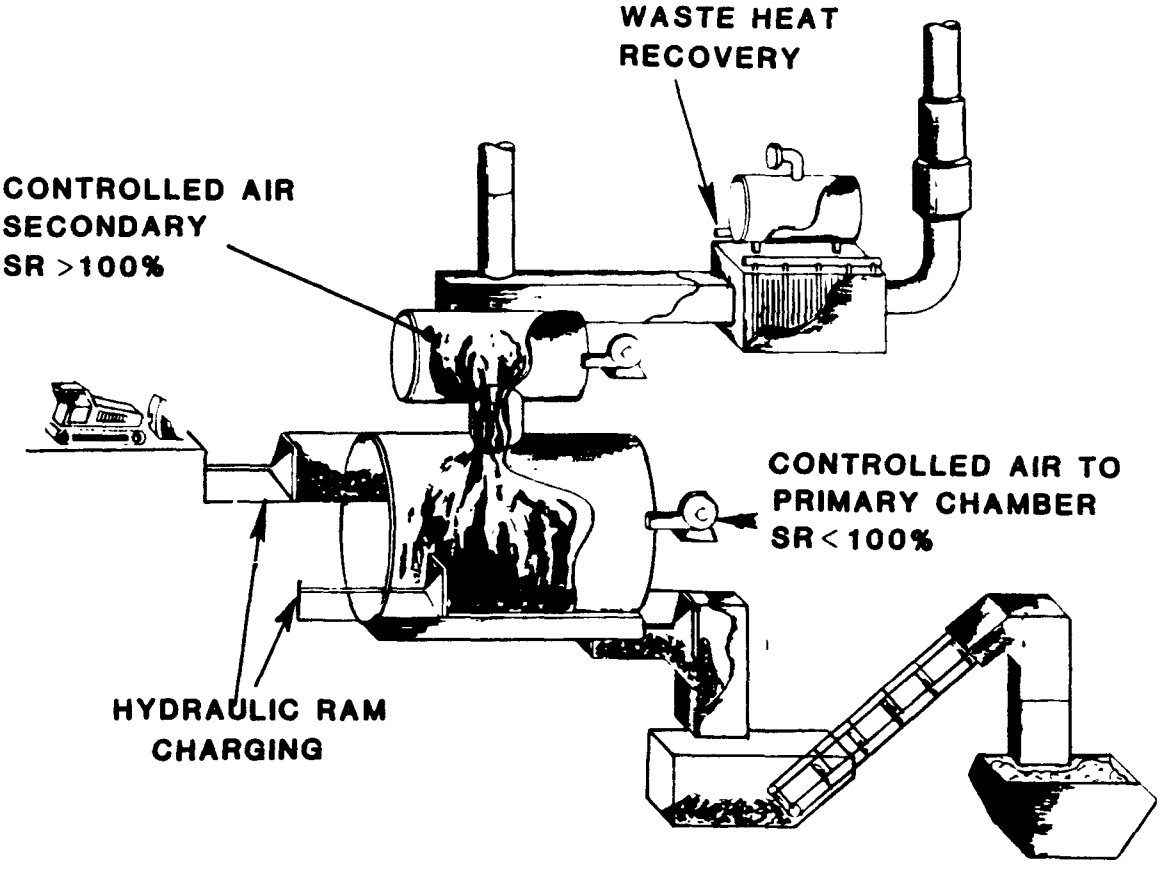

Figure 3-6. Components of typical starved-air modular combustor.

totally dependent upon the efficiency of air mixing in the secondary chamber. The small modular systems have no heat removal from either the primary or secondary chamber. Energy recovery is accomplished in a downstream waste heat boiler.

3.4 RDF Systems

As noted at the beginning of this chapter, there are two basic approaches to dealing with the problem of variability in MSW. The mass burn and starved-air systems accept the variability of MSW as a fuel characteristic to be controlled in the combustion system design. The alternate approach is to pre-process MSW to generate a more uniform fuel. The objective is to modify the fuel characteristics sufficiently for the refuse-derived fuel(RDF) to be burned in boilers designed for fossil fuels, e.g. spreader stokers and suspension fired units. Also, RDF might be burned in cyclone boilers, pulverized coal-fired boilers or fluidized bed furnaces. Processed fuel might be burned separately or it might be burned in a co-firing configuration using the RDF as a supplement to the baseline fossil fuel.

To function properly, the RDF characteristics should be matched to combustion system requirements. In its simplest form, RDF is produced by passing the raw waste through a shredder after first removing bulky items such as refrigerators. This results in a fuel which can be burned in spreader stokers. RDF production may also include metals removal which produces a salable by-product. Often that process will be coupled with screening and secondary shredding. Such a fuel is better suited for firing in spreader stokers than simple "shred-and-burn" operations. Production of refuse-derived fuel is a relatively recent engineering innovation; thus it is not surprising that RDF systems have been plagued with reliability problems. Some systems have produced a fuel product with less than the desired characteristics which creates significant difficulty achieving uniform fuel feed to the boiler.

3.5 References

Camp Dresser & McKee, Inc., "Dioxin Emissions from Resource Recovery Facilities and Summary of Health Effects," Draft Report prepared for U.S. EPA Office of Solid Waste, November 19, 1986.

Detroit Stoker, 1986. Discussions and data presented by Detroit Stoker personnel (T. A. Giaier and D. C. Reschley) to W. S. Lanier and W. R. Seeker in Monroe, Michigan, September 9, 1986.

Franklin Associates, Ltd., "Characterization of Municipal Solid Waste in the United States, 1960 to 2000," (prepared for the U.S. Environmental Protection Agency) Washington, D. C., July 11, 1986, pp. 1-8.

Kramlich, J. C., M. P. Heap, W. R. Seeker, and G. S. Samuelsen. 20th Symposium (International) on Combustion, p. 1991, The Combustion Institute.

Niessen, W. R., A. F. Sarofim, C. M. Mohr, and R. W. Moore, "An Approach to Incinerator Combustible Pollutant Control," Proceedings National Incinerator Conference, ASME, New York, pp. 248-259, 1972.

Stull, R. D., E. F. Westrum, and G. C. Sinke; The Chemical Thermodynamics of Organic Compounds, Wiley, 1969.

Telecon. Riley Stoker Corp., with Lanier, W. S., EER Corp., August 17, 1986. Conversation about Riley Stoker's MSW System design practices.

G. C. Williams, A. F. Sarafim, J. B. Howard, and J. B. L. Rogers. "Design and Control of Incinerators," Final Report to Office of Research and Monitoring, U.S. Environmental Protection Agency under Grant No. EC-00330-03, 1974.

4.0 POTENTIAL FOR AIR EMISSIONS

During the combustion of municipal waste, a number of pollutant species can be produced. The pollutants include both criteria pollutants and other pollutants as follows:

- Nitrogen oxides, NO_x
- Carbon monoxide, CO
- Acid gases (HCl, SO_2, HF, H_2SO_4)
- Particulate matter
- Metals (As, Be, Cd, Pb, Hg, Ni, etc.)
- Toxic Organics

The focus of this study is on the combustion control of emissions of organics such as chlorinated dibenzo-p-dioxin (PCDD) and chlorinated dibenzofurans (PCDF). However, the control of PCDD and PCDF emissions should not be pursued without consideration of how control scenarios will influence the emission of other pollutants. In some instances, the control schemes may in fact adversely impact the system's ability to control the emissions of another pollutant. The following sections will provide information on formation and control schemes of the variety of potential air pollutants.

4.1 Organic Emissions

There are a number of organic compounds that have been measured in effluents from municipal waste combustors (MWCs). In addition, other hydrocarbons including a broad range of aromatic and chlorinated organics might potentially be emitted. The principle emphasis at present is being placed on the chlorinated congeners of dibenzo-p-dioxin (PCDD) and dibenzofuran (PCDF). However, PCDD and PCDF comprise only one of many types of organics emitted from municipal waste combustion (MWC) facilities that may be eventually of concern. For this reason, control approaches to prevent emissions of trace organics in general, not just PCDD and PCDF, are included in the subsequent chapters although the emphasis is clearly directed towards PCDD and PCDF.

As illustrated previously in Table 2-1, a wide range of PCDD and PCDF emission rates have been measured from various refuse fired facilities throughout the world. A comprehensive review of available emission data from municipal waste burning facilities has recently been compiled for EPA by Midwest Research Institute and is included as a volume entitled "Emission Data Base for Municipal Waste Combustors."

There are many different theories concerning the formation of PCDD's and PCDF's from MSW combustion systems (Germanus, 1985, Niessen et al., 1984, 1986). The best-supported theories are illustrated in Figure 4-1. The first theory involves the breakthrou ' of unreacted PCDD/PCDF present in the raw refuse. A few measurements have indicated the presence of trace quantities of PCDD/PCDF in the refuse feed that, if not burned in the furnace, could account for the levels of emissions (Lustenhouwer et al., 1980). The trace levels of PCDD/PCDF found in the solid waste feed would have to be completely unreacted to account for the emissions levels of these species which is unlikely in any combustion environment (Germanus, 1985).

A more plausible theory involves the conversion of species referred to as precursors which are of similar structure. For example, relatively simple abstraction and combination reactions can convert chlorophenols and polychlorinated biphenyls to PCDD/PCDFs. These precursors can be in larger abundance in the refuse and can be produced by pyrolysis in oxygen-starved zones. There is direct evidence of gas phase yields of PCDD/PCDF from PCB fires (Axelrod, 1985) and lab and bench-scale studies on PCB, chlorinated benzene and chlorinated phenols (Olie et al., 1983, Hutzinger et al., 1985).

The third mechanism involves the synthesis of PCDD/PCDF from a variety of organics and a chlorine donor. Again, the simplest mechanisms involve those species that are structurally related to PCDD/PCDF but a full spectrum of plausible combustion intermediate chemistry could be proposed to lead to precursors and eventually to PCDD/PCDFs. For example, the analysis for intermediates formed during the combustion of complex fuels such as coal and wood indicate yields of (unchlorinated) PCDD and PCDF species (Hites and Howard, 1978) that could be chlorinated when a suitable chlorine donor is

I. PRESENCE IN REFUSE

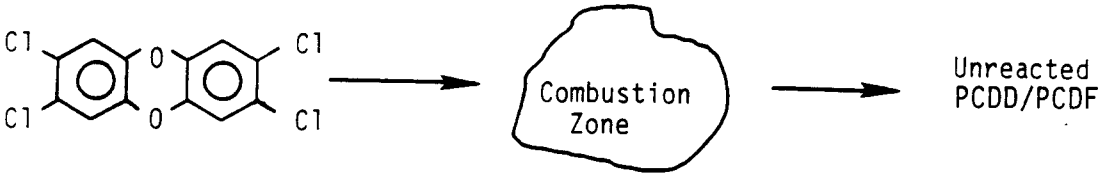

Evidence: Occasional PCDD/PCDF contamination in refuse

II. FORMATION FROM RELATED CHLORINATED PRECURSORS

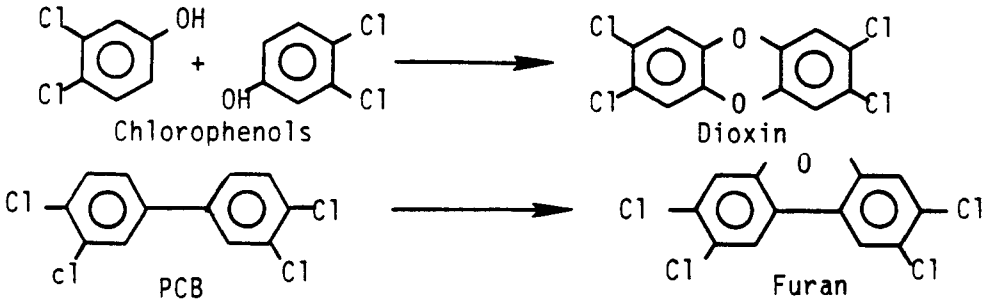

Evidence: PCDD/PCDF on soot from PCB tires
Lab and bench studies of PCB, Chlorinated Benzene and Chlorinated Phenols yielded PCDD/PCDF

III. FORMATION FROM ORGANICS AND CHLORINE DONOR

PVC, Lignin + Chlorine donor NaCl, HCl, Cl_2 → PCDD/PCDF

Evidence: Lab scale tests of vegetable matter, wood, lignin, coal with chlorine source yielded PCDD/PCDF

IV. SOLID PHASE FLY ASH REACTION

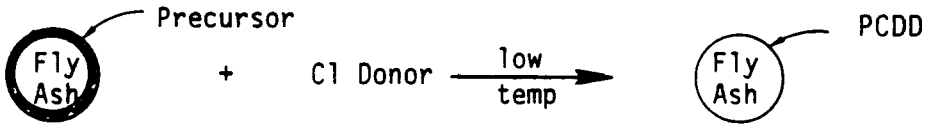

Evidence: Lab scale demonstrating potential for ash catalysis reactions of PCDD's to other homologues.

Figure 4-1. Hypothetical mechanisms of PCDD/PCDF formation chemistry.

available. Complex fuels which contain lignin have been shown to yield higher levels of PCDD/PCDF than non-lignin fuels (Niessen, 1984).

The final hypothetical mechanism involves catalyzed reactions on fly ash particles at low temperatures. The lab scale evidence indicates that the chlorination of related-structure precursors on fly ash particles to form PCDD/PCDF can occur but that the rates are relatively slow (Eiceman et al., 1982; Rhgei and Eiceman, 1982). Recent work (Vogg, Metzger and Stieglitz, 1987) has shown the importance of this mechanism as well as quantifying the temperature dependence.

In summary, current theories on formation of PCDD/PCDF involve either unburned PCDD/PCDF from the refuse or related-structure precursors, or precursors that are likely to be formed in oxygen-starved zones of the furnace. The precursors can be converted to PCDD/PCDF even at low temperatures on fly ash. Vogg et al. (1987) indicate that the optimal temperature for such catalytic reactions is approximately 600°F. Hence it is important to destroy the PCDD/PCDF and the precursors in the furnace. Therefore, the destruction mechanisms are equally as important as the formation mechanisms. Assuring complete destruction will likely be the more appropriate combustion control method rather than the prevention of formation.

The destruction of PCDD/PCDF is expected to be similar to the oxidation of other aromatic chlorinated hydrocarbons primarily involving free radicals (such as OH) which attack the structure or unimolecular decomposition (Shaub and Tsang, 1983). The details of the mechanism are uncertain and more fundamental research is required. Direct experimental measurements of the thermal decomposition characteristics of non-chlorinated PCDD and PCDF species are available from data at the University of Dayton Research Institute (UDRI) (Duvall and Rubey, 1977). These studies using the Thermal Decomposition Analytical System (TDAS) provide a definition of the thermal requirements for destruction under highly diluted reactant conditions. These conditions, sometimes referred to as nonflame, provide a conservative indication of the temperature to which the test species must be subjected in

order to achieve destruction. The thermal decomposition behavior of (non-chlorinated) PCDD/PCDF and hypothetical precursors are shown in Figure 4-2 at a specific residence time.

The thermal decomposition data indicate that relatively low temperatures are required to destroy PCDD and PCDF and that the temperature requirements are similar to the decomposition temperature required for non-substituted biphenyl. Chlorinated biphenyls have higher decomposition temperatures and a similar increase in the temperature requirements are expected for PCDD/PCDF due to the expected similarity of the decomposition mechanisms of PCB and PCDD/PCDF. These data indicate that 800°C (~1500°F) is a characteristic temperature for high levels of destruction (>99.9 percent) of PCB and by analogy for destruction of PCDD/PCDF. This temperature is in general agreement with the Dow Chemical conclusions that TCDD decomposition occurs above 800°C (Bumb, et al. 1980, Stehl et al. 1973). Other potential precursors to the formation of PCDD/PCDF can have somewhat higher decomposition temperatures but are still low relative to combustion temperatures.

The UDRI decomposition data (Rubey et al., 1983 and Dellinger et al., 1983) also indicate that temperature is more important than residence time. The data for the thermal decomposition temperature generally correlates with the residence time t as

$$T = \frac{E_a}{R}\left[\ln\left(\frac{-tA}{\ln(f_r)}\right)\left(\frac{[O_2]}{0.21}^{b}\right)\right]^{-1} = \text{Thermal Decomposition Temperature}$$

where $[O_2]$ is the oxygen mole fraction, b is the reaction order with respect to oxygen, R is the universal gas constant, f_r is the fraction of the species remaining and E_a and A are constants which depend on the test species in question. Thus, the destruction of the species depends predominantly on the temperature and effectively there exists a threshold temperature above which the compound will be rapidly destroyed. Effective combustion control schemes must ensure that all PCDD/PCDF and precursors experience the required

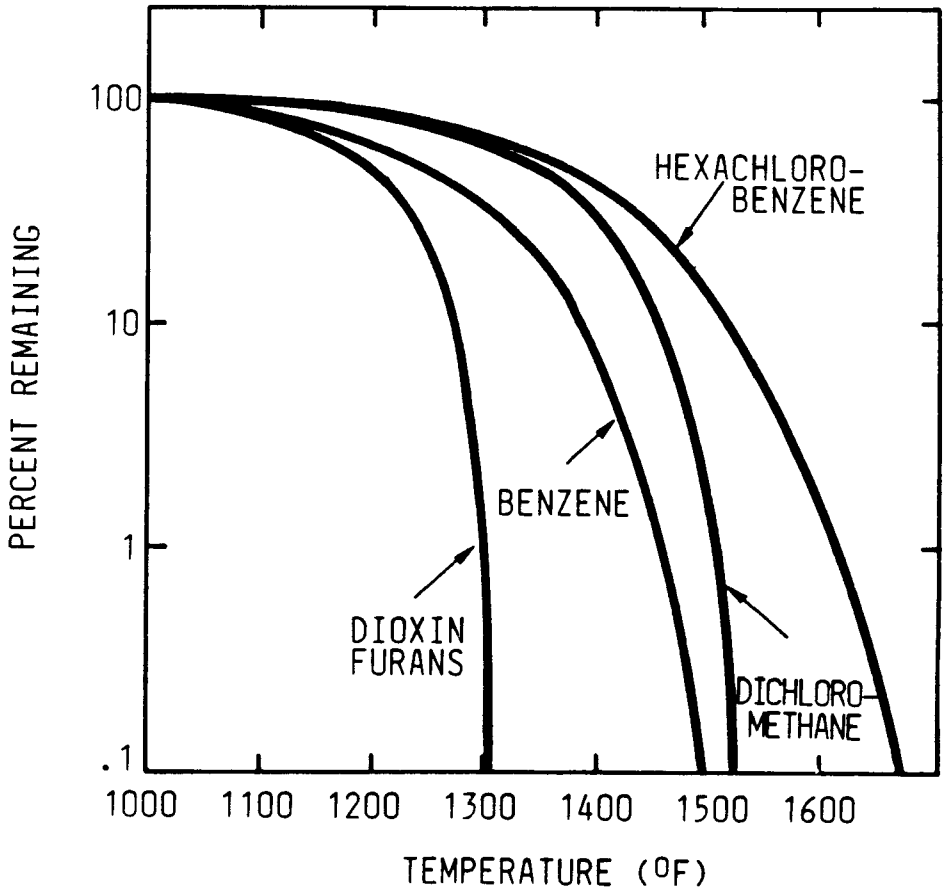

Figure 4-2. Thermal decomposition characteristics of selected organics under dilute (nonflame) conditions for 1 second (Dellinger et al. 1977).

threshold temperature if they are to be destroyed. For PCDD/PCDF and potential precursors, the threshold temperature is near 925°C (1700°F).

Another possible control scheme involves removal of PCDD/PCDF from the flue gas. PCDD/PCDF are condensible at flue gas temperatures and will deposit on fly ash particles very efficiently. Because of the higher surface areas of smaller particles, the condensation will occur preferentially on smaller particles. Hence, a removal system must efficiently remove the finer particles in order to effectively remove PCDD/PCDF. Data on full scale tests have clearly shown the effectiveness of a high efficiency baghouse with dry injection flue gas treatment ([illegible]in, 1986) in removing PCDD/PCDF from the flue gas.

Thus, in summary, the current theories concerning the emission of PCDD/PCDF and other similar organics include any or all of the following possibilities:

- Lack of destruction of PCDD/PCDF originally present in the feed refuse

- Conversion of precursors present in the feed stock or formed in the combustion processes to PCDD/PCDF and lack of destruction of the synthesized PCDD/PCDF

- Lack of destruction of precursors in the combustion system and conversion of the precursors to PCDD/PCDF on fly ash particles at low temperatures.

Combustion control of the emission of PCDD/PCDF must ensure that both PCDD/PCDF present in the feed and formed in the combustion of precursors are destroyed in the high temperature combustion zone. This implies ensuring that all furnace gases experience sufficiently high temperatures to destroy both PCDD/PCDF and potential precursors. Since even trace emissions of PCDD/PCDF are of concern, both spatial and temporal variations must be considered in the combustion control scheme so that there are no pathways which at any

time are not sufficiently hot. The presence of oxygen lowers the required temperature; ensuring complete mixing at uniformly high temperatures will ensure low PCDD/PCDF emissions.

4.2 NO_x Formation and Control

Air emissions of NO_x from municipal waste combustors (MWCs) are highly variable. Measurements have been made on a number of plants as summarized by O'Connell et al (1982), Rigo et al (1982), Russel and Roberts (1984) and MRI (1986). Discussions with manufacturers have further indicated the high variability of NO_x emissions. The reported levels range from less than 0.05 to near 1.0 lb/MMBTU with average values for all facilities reported at around 0.25 lb/MMBTU (130 ppm at 12 percent CO_2). The sources have indicated that there is no clear trend in NO_x emissions from different types of municipal waste combustors (MWCs).

For most of the country, there are no NO_x emissions standards for municipal waste combustors (MWCs). Even though there are no national limits, municipal waste combustion (MWC) facilities will generally have NO_x regulations imposed locally. Manufacturers of facilities indicated that plants under permitting evaluation in several locations around the country were having to meet NO_x emission limits imposed by either the state or local environmental agencies.

In the south coast air basin of California (Los Angeles area), for example, all refuse-to-energy facilities exceeding 50 tons/day are subject to New Source Review. In addition the district restricts NO_x emissions to less than 225 ppm (3 percent, O_2 dry, 15 min average). This requirement is expected to dictate special consideration to ensure compliance. The New Source Review requires a preconstruction review of the new facilities and if net cumulative emissions exceed 100 lb/day then facilities must have Best Available Control Technologies (BACT), emissions offsets and not cause a violation or make measurably worse an existing violation of a national ambient standard. Other local districts are also requiring NO_x limits on their own.

The NO_x formed in municipal waste combustion (MWC) facilities occurs by two separate pathways, thermal fixation of molecular nitrogen ("thermal NO_x") and conversion of nitrogen from the fuel. The thermal fixation mechanism involves high temperature reactions of free radicals of nitrogen and oxide. The controlling mechanism have been determined to be Zeldovich reactions of the form:

$$O + N_2 = NO + N$$
$$N + O_2 = NO + O$$

These reactions are strongly temperature dependent as shown in Figure 4-3. This figure represents a computer simulation of the NO_x formed for a specific condition and residence time ( ) and clearly indicates the strong temperature dependence of thermal NO_x formation.

A comparison of the actual NO_x levels with those expected by thermal mechanisms at the maximum temperature expected in the furnace indicates another NO_x source must be operational. For example, less than 100 ppm of thermal NO_x would be expected from thermal processes for conditions which exist in normal furnace designs. This extra source of NO_x could be attributed in part to the conversion of nitrogen bound in the refuse feed. This mechanism was first discovered by burning coals and fuel oils in nitrogen-free oxidizers where the only nitrogen source was in the fuel. These studies have indicated that the conversion of the fuel-bound nitrogen is highly dependent on the local oxygen availability to volatile species, the amount of fuel bound nitrogen and the chemical structure of the nitrogen and fuel in the refuse. The conversion efficiency can vary from near 50 percent for highly mixed conditions to near 5 percent for oxygen starved-staged combustion conditions for coal bound nitrogen (Chen et al, 1982). As shown in Figure 4-3, the conversion of fuel nitrogen is not expected to be temperature dependent.

Traditionally, NO_x emissions from municipal waste combustion (MWC) have not been controlled. However, with local air regulations, there may be a need to control NO_x to attain standards. Also, the general tendency to

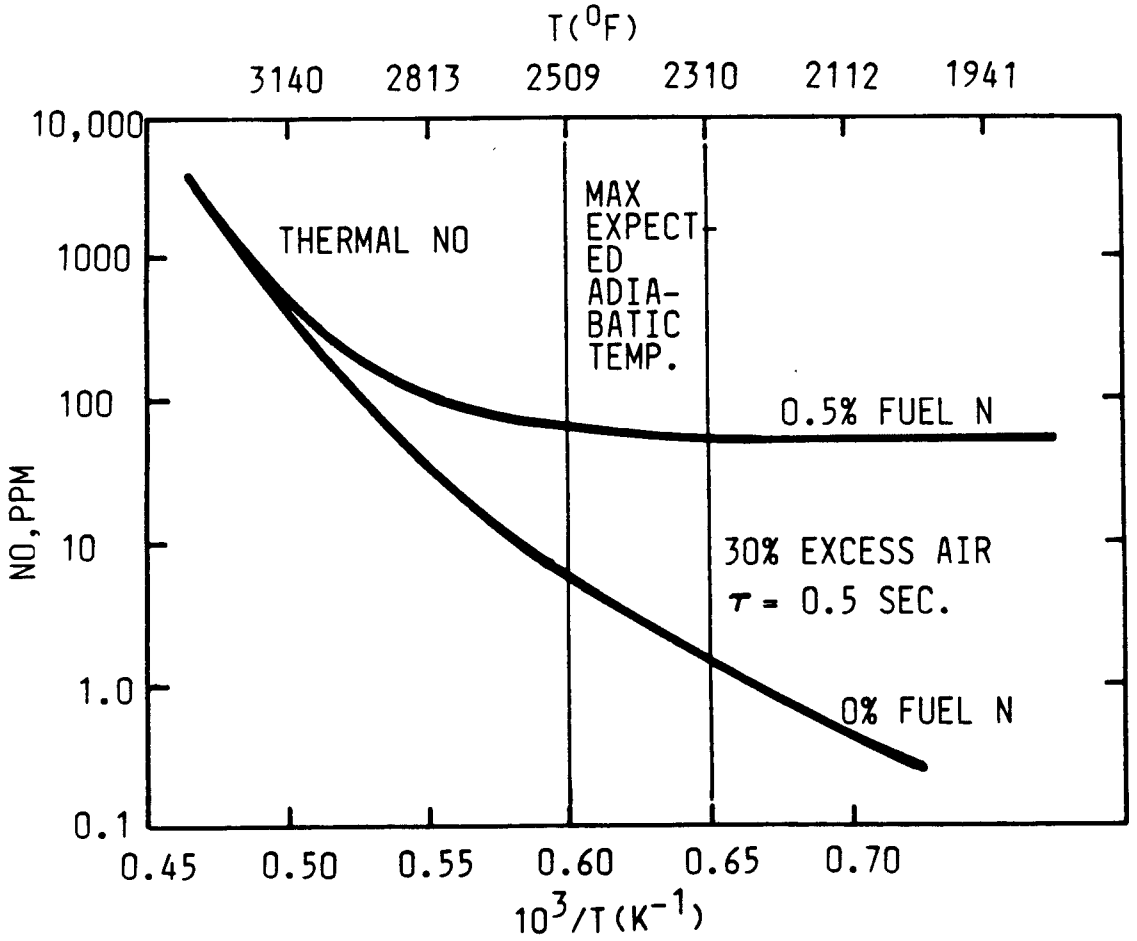

Figure 4-3. Impact of temperature and fuel nitrogen on NO_x emissions for excess air conditions (calculated using EER kinetic set).

produce higher temperatures and better mixing for PCDD/PCDF control will lead to higher NO_x emissions. Manufacturers of MSW combustion equipment have indicated that NO_x emissions from modern-designed plants will probably be higher than those from older plants.

Only a few of the potentially applicable control schemes have been demonstrated at full-scale for MSW combustion devices. In Table 4-1 is provided a summary of the status of the control schemes for NO_x and their potential impact on control of organic emissions such as PCDD/PCDF. Flue gas recirculation is a demonstrated technology for thermal NO_x which involves the dilution of combustion air to lower the flame temperature. This scheme has been demonstrated by Volund as an effective means of controlling NO_x in its refractory-lined high temperature municipal waste combustors. Flue gas recirculation lowers flame and furnace temperatures which is expected to be counter to the control requirements for PCDD/PCDF. The significance of the detrimental impact on PCDD/PCDF emissions due to reduced bulk temperatures has yet to be determined.

Reburning with an auxiliary fuel such as natural gas is currently being developed for fossil fuel fired furnaces as a retrofittable combustion control scheme for NO_x. The process could potentially be applied to MSW municipal waste combustors as shown in Figure 4-4. The SR_i terms in this figure refer to the stoichiometric ratio with $SR < 1.0$ representing fuel-rich conditions. Enough reburning fuel should be injected at a location low in the furnace to create a hot, slightly oxygen-starved zone. The overfire air is injected above the reburning zone to complete the combustion process. Reburning can be combined with urea or ammonia injection to optimize the NO_x reduction. In addition to NO_x reduction, reburning has the potential for destruction of PCDD/PCDF due to the high temperatures and high concentration of flame radicals that exist in the reburn zone (Overmoe et al, 1985). Reburning with natural gas holds the promise of combined NO_x and PCDD/PCDF control but currently is only a concept that has not been tested above bench-scale.

TABLE 4-1. STATUS OF NO_x CONTROL OPTIONS FOR MUNICIPAL WASTE COMBUSTORS

APPROACH	COMPATIBILITY WITH ORGANIC CONTROL	BENEFITS / DISADVANTAGES	STATUS
FLUE GAS RECIRC.	DETRIMENTAL	INEXPENSIVE EFFECTIVE FOR THERMAL ONLY	DEMONSTRATED FOR SOME SYSTEMS (VOLUND, VICON)
THERMAL $deNO_x$ BY NH_3 INJECTION	NO IMPACT	70-80% EFFECTIVE NH_3 SLIP FURNACE INJECTION	FULL SCALE INSTALLATION (COMMERCE & JAPAN) TESTING UNDERWAY
REBURNING WITH NATURAL GAS	BENEFICIAL	POTENTIAL PCDD/PCDF CONTROL 50% EFFECTIVE CONDITIONS NOT WELL SUITED FOR REBURNING MAY REQUIRE MODIFICATION OF AIR FLOWS	CONCEPTUAL ONLY DEMONSTRATION UNDERWAY FOR FOSSIL FIRED BOILERS
SELECTIVE CATALYTIC REDUCTION	NO IMPACT	CATALYSIS POISONING EXPENSE 90% EFFECTIVE	FULL SCALE INSTALLATION (JAPAN)

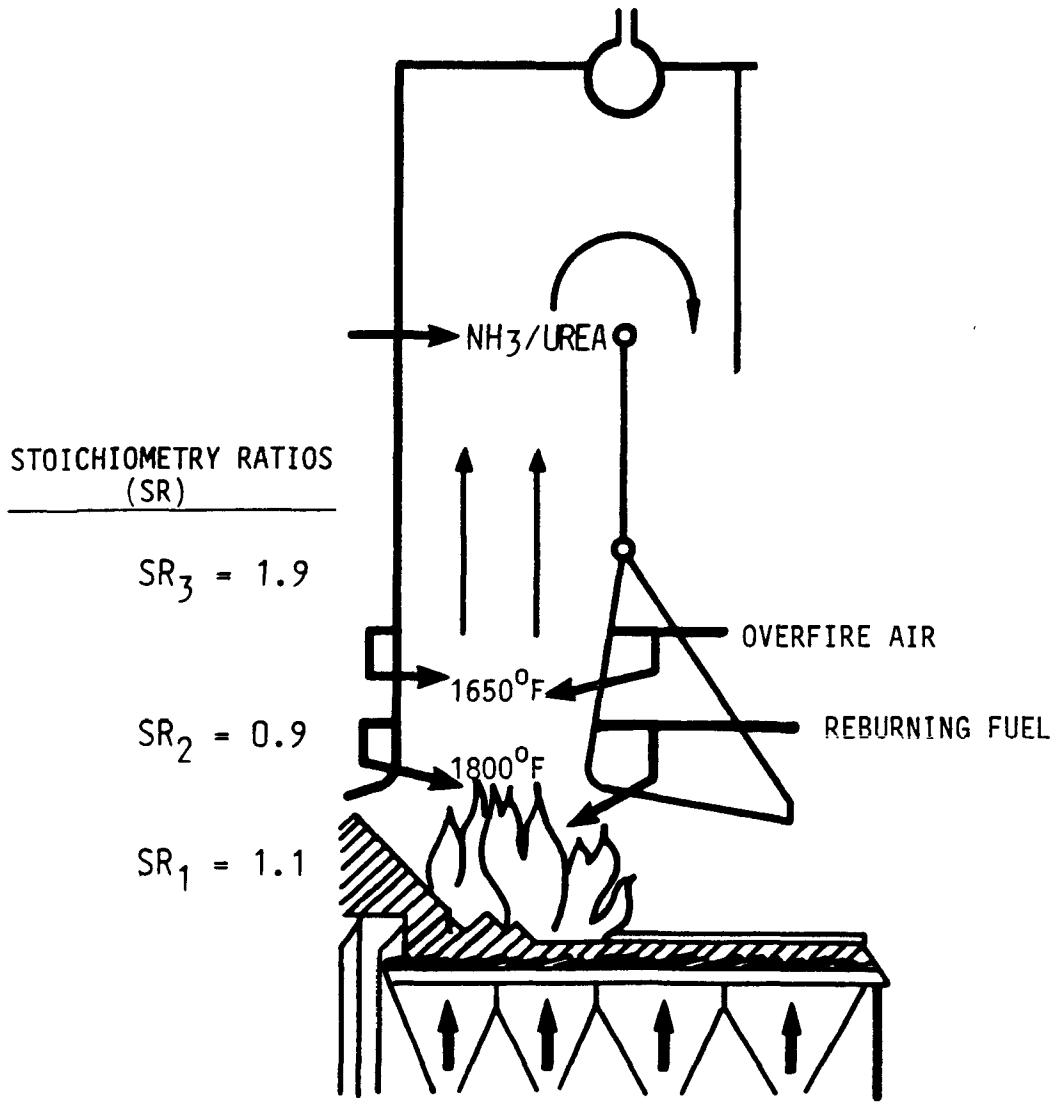

Figure 4-4. Application of reburning and de-NO_x schemes for NO_x control of mass burn municipal waste combustors.

Other NO_x control schemes for municipal waste combustors (MWCs) involve post-combustion zone control. For example, thermal $DeNO_x$ involves the injection of ammonia in the upper furnace, to achieve selective reduction of NO_x. There are a few examples of the application of this technology in Japan and recently in the U.S. for municipal waste combustors (MWCs) (e.g., Hurst and White, 1986). The NH_3/NO reactions are extremely sensitive to temperature so that the injection location must be carefully selected. Also, there is generally some slip of NH_3 which does not completely react that can cause odors, fouling and the production of visible plume. New tests at full-scale installations should indicate the viability of this technology for municipal waste combustors (MWCs) in the near future.

Another post-combustion control scheme involves selective catalytic reduction (SCR) which enhances the reaction of NO and NH_3 to form N_2. The use of a catalyst enables the reactions to take place at lower temperatures over a broader temperature window and there is little NH_3 slip. The process achieves very high NO_x reductions (typically 80 percent). There are numerous full-scale installations of SCR on oil- and gas-fired boilers principally in Japan although there is too little experience with SCR with MSW combustion effluents to know if catalyst poisoning is to be a factor.

In summary, the levels of NO_x emissions from MSW combustion facilities are generally on the order of 100-300 ppm (12 percent CO_2). However, the emissions vary widely due to differences in nitrogen content in the raw refuse and the thermal environment in different municipal waste combustors (MWCs). Trends to higher temperatures and more uniform mixing for PCDD/PCDF control are expected to increase NO_x emissions in newly designed plants. State and local regulatory agencies will likely dictate NO_x emission standards in the future which will require the implementation of separate NO_x control schemes. Unfortunately, few control schemes are available which have been evaluated at full-scale.

4.3 Particulate and Trace Metals

Fine fly ash particles are produced as a natural consequence of combustion of heterogenous refuse. The refuse feed can contain 30 to 50 percent noncombustibles by mass. Some of the finer ash material can become entrained in the flow and be carried out of the furnace. Also certain inorganic compounds present in the burning bed are volatile at combustion temperature and will leave the combustion zone as a gas before recondensing downstream. Finally, carbonaeous particulate matter or soot is always present during the combustion of solid fuels and if it is not burned out it will also escape the furnace.

A number of measurements have been undertaken on municipal waste combustion (MWC) facilities and several survey programs are available which summarize the results on particulate emissions (see e.g., MRI, 1986; O'Connell et al, 1983; Rigo et al, 1982; and ISWA, 1986). Uncontrolled particulate loadings have been found to range up to 3 lb/MMBTU depending on the refuse and combustor characteristics. There is some evidence that indicates that starved air units have the lowest uncontrolled emissions while spreader stoker units are the highest. Control of particulate is necessary to meet NSPS. The volume entitled "Flue Gas Cleaning Technology" provides a thorough review of downstream air pollution control devices.

Of particular concern for particle emissions is the emission of heavy metals in the form of fine particulate. In Table 4-2, a summary is provided of the typical metal concentrations expected in municipal solid waste. In Figure 4-5 is shown the transformation of these metals during the combustion process. The ash included in the refuse can either remain in the bed and be rejected together with other residuals, be entrained into the flow or be vaporized and re-condense downstream. The residual matter generally includes the incombustible fraction of the refuse and such metals as iron, aluminum, copper and zinc along with the other inerts for example, calcium and silica. Roughly about 1-3 percent of the incombustible fraction is entrained as fly ash in the 1-20 micron range. A smaller fraction is vaporizable. Within the bed, the locally-reducing high temperature conditions can lead to the

TABLE 4-2. METALS PRESENT IN MSW

MUNICIPAL SOLID WASTE		
ELEMENT	AVG.	CONCENTRATION (ppm) RANGE
Ag	3	<3-7
Al	9000	5400-12000
Ba	170	47-450
Ca	9800	5900-17000
Cd	9	2-22
Co	3	<3-5
Cr	55	20-100
Cu	350	80-900
Fe	2300	1000-3500
Hg	1.2	0.66-1.9
K	1300	920-1900
Li	2	<2-7
Mg	1600	880-7400
Mn	130	50-240
Na	4500	1800-7400
Ni	22	9-90
Pb	330	110-1500
Sb	45	20-40
Sn	20	<20-40
Zn	780	200-2500

Data from Law and Gordon, 1979

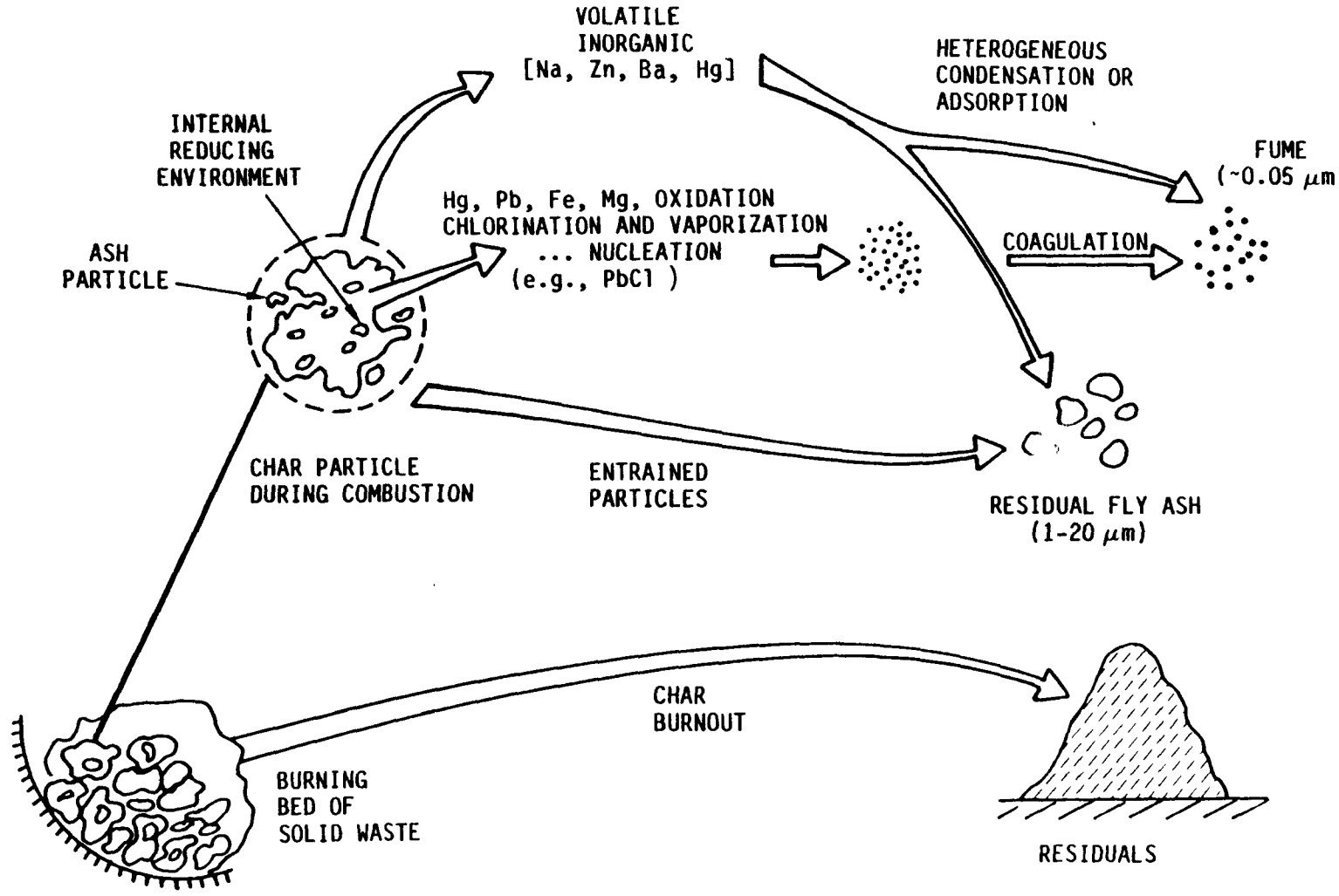

Figure 4-5. Transformation of mineral matter during combustion of metal containing waste.

formation of oxides and chlorides of metals which can be volatile. Also, some metals such as sodium, mercury and to a lesser extent, cadmium, have high vapor pressures as the pure metal. These materials can volatilize and re-condense either homogeneously as a fume or heterogeneously on the fly ash. The condensation mechanisms favor the finer particles due to their higher surface area to mass ratio. Thus, the finer particles that can escape particulate control devices, i.e., submicron, are enriched in these volatile species (sometimes more than 100-fold over the refuse incombustibles).

The actual partitioning of the metals among the residuals, fly ash and fume depends on the waste composition as well as the combustion environment. The impact of the design and operating variables on the partitioning can not currently be predicted with confidence. Equilibrium metals partitioning analysis are currently being developed under EPA support which will lead to a better understanding of the fate of metals. However, it is clear that design and operating conditions defined for PCDD/PCDF control will influence particulate and metals emissions. For example, higher velocities through the bed will increase the entrainment of particles. Changes in bed stoichiometry for proper air distribution will influence the vaporization of volatile metals. Also, temperature increases will favor vaporization of the metals. Therefore, the impact of design and operating conditions for PCDD/PCDF control on the emission of metal enriched fume requires further investigation.

4.4 Acid Gases

The acid gases of interest as pollutant emissions from MSW combustion facilities are SO_2, HCl, H_2SO_4 and HF. The emissions of these species is a direct function of the amount of elemental sulfur, chloride and fluoride in the feed refuse. For example, municipal waste has been found to have 0.12 percent sulfur on average and 30-60 percent is converted to SO_2 (O'Connel et al, 1983). The balance of the sulfur is retained in the residual ash or is absorbed on fly ash. In the same manner, roughly half of the chloride is emitted as HCl. Most state and local environmental protection agencies are requiring acid gas control. The control technologies all involve flue gas

scrubbing either with dry, semi-dry or wet alkaline sprays. Combustor design and operating conditions for control of PCDD/PCDF are expected to have no impact on the emission of or the ability to control acid gas emissions.

4.5 References

Axelrod, D.,. MD, "Lessons Learned from the Transformer Fire at the Binghampton (NY) State Office Building." Chemosphere 14 (6/7) p. 775-778, 1985.

Bumb, R. R. "Trace Chemistries of Fire: A Source of Chlorinated Dioxins", Science, 210, 385, 1980.

Chen, S. L., M. P. Heap, D. W. Pershing, and G. B. Martin. "Influence of Coal Combustion on the Fate of Volatile and Char Nitrogen During Combustion." Nineteenth Symposium (Int.) on Combustion/The Combustion Institute Pittsburgh, p. 1271, 1982.

Dellinger, B. et al., "Laboratory Determination of High Temperature Decomposition Behavior of Industrial Organic Materials". Proceedings of 75th APCA Annual meeting, New Orleans, 1982.

Duvall, D. S. and W. A. Rubey, "Laboratory Evaluation of High Temeprature Destruction of Polychlorinated Biphenyls and Related Compounds," EPA 600/2-77-228, 1977.

Eichman, G. A. and H. O. Rhgei. Chemosphere, 11, p. 833, 1982.

Germanus, D. "Hypothesis Explaining the Origin of Chlorinated Dioxins and Furans in Combustion Effluents." Presented at the Symposium on Resource Recovery, Hofstra University, Long Island, New York, 1985.

Hites, R. A. and J. B. Howard. "Combustion Research on Characterization of particulate Organic matter from Flames". EPA-600/7-78-167, 1978.

Hurst, B. E. and C. M. White. "Thermal $DeNO_x$: A Commercial Selective Noncatalytic NO_x Reduction Process for Waste to Energy Applications".

Hutzinger, O., M. J. Blumich, M. V. D. Verg. and K. Olie. "Sources and Fate of PCDD and PCDFs: An Overview", Chemosphere, 14 (6/7) p. 581, 1985.

Law, S. L. and G. E. Gordon. "Sources of Metals in Municipal Incinerator Emissions". Environ. Sci. Tech., 13, p. 433, 1979.

Lustenhower, J. W. A., K. Olie, and O. Hutzinger. "Chlorinated Dibenzo-p-Dioxin and Related Compounds in Incinerator Effluents. A Review of Measurements and Mechanisms of Formation," Chemosphere, 9, p. 501, 1980.

Martin, GMbH. Data presented to W. R. Seeker and W. R. Niessen, Munich, July 1986.

MRI 1986. Emission inventory for EPA, 1986. See Appendix A of the Comprehensive Report.

Niessen, W. R. "Production of PCDD and PCDF from Resource Recovery Facilities, Part II", 1984 National Waste Processing Conference ASME proceedings, p. 358, 1984.

Niessen, W. R. "Dioxin Emissions from Resource Recovery Facilities and Summary of Health Effects." Report prepared for EPA OSW, 1986.

O'Connell, W. L., G. C. Statler and R. Clark. "Emissions and Emission Control in Modern Municipal Incinerators". 1982 National Waste Processing Conference. ASME Proceedings, p. 285, 1982.

Olie, K., M. V. D. Berg, and O. Hutzinger. "Formation and Fate of PCDD and PCDF Combustion Processes", Chemosphere 12 (4/5) p. 627, 1983.

Overmoe, B. J., S. L. Chen, D. W. Pershing, and G. B. Martin. "Influence of Coal Combustion on the Fate of Volatile and Char Nitrogen During Combustion." Nineteenth Symposium (Int.) on Comb./The Combustion Institute, Pittsburgh, p. 1271, 1982.

Rhgei, H. and G. A. Eiceman. "Adsorption and Thermal Reactions of 1,2,3,4-TCDD on Fly Ash from Municipal Incinerator." Chemosphere, 11 (6) p. 569, 1982. See also Chemosphere, 13: p. 421, 1984 and Chemosphere 14 (3/4) p. 259, 1985.

Rigo, H. G., J. Raschka, S. Worster. "Consolidated Data Base for Waste-to-Energy Plant Emissions." 1982 National Waste Processing Conference. ASME Proceedings, p. 305, 1982.

Rubey, W. A., J. Torres, D. Hall, J. L. Graham, B. Dellinger. "Determination of the Thermal Decomposition Properties of 20 Selected Hazardous Organic Compounds", EPA Cooperative Agreement Report, 1985.

Russel, S. H. and J. E. Roberts. "Oxides of Nitrogen: Formation and Control in Resource Recovery Facilities". 1984 National Waste Processing Conference. ASME Proceedings, p. 441, 1984.

Shaub, W. M. and W. Tsang. "Dioxin Formation in Incinerators". Envir. Sci. Tech., 17, p. 721, 1983.

Stehl, R. H., R. R. Patenfuss, R. A. Bredeweg, and R. W. Roberts. "The Stability of Pentachlorophenol and Chlorinated Dioxins to Sunlight, Heat and Combustion" in Chlorodioxin - Origins and Fate. E. H. Blair, ed. ACS Washington, D. C., p. 119, 1973.

Vogg, H., M. Metzger, and L. Stieglitz. "Recent Findings on the Formation and Decomposition of PCDD/PCDF in Solid Municipal Waste Incineration." Proceedings of Emissions of Trace Organics From Municipal Solid Waste Incinerators, Specialized Seminar, Part 1, Session 2, Copenhagen 20-22, January 1987.

World Health Organization, Regional Office for Europe. March 17-21, 1986. Notes from Meeting on Working Group on Risks to Health from Dioxins from Incineration of Sewage Sludge and Municipal Waste.

5.0 CURRENT PRACTICES IN MASS BURN TECHNOLOGY

5.1 Mass Burn Technologies

In Figure 5-1 is shown an example of a large, modern, mass burning facility. The facility consists of the following basic components:

- Waste storage, handling and feeding system (1,2,3)
- Combustion Systems (4,5)
- Boiler and Generators (6,11)
- Air Pollution Control Equipment (7,9,10)
- Residuals Handling (12,13,14)

The major distinguishing features of mass burn technologies is the lack of virtually any processing of the refuse and the large capacities (>100 TPD). The combustion system consists generally of a grate on which the solid waste burns in a layered bed that is progressively moved down the grate. The air required for combustion of the waste is introduced both underneath the grate and directed through the bed (referred to as primary air) and above the bed through secondary air jets.

Most of the major organizations which manufacture mass burn technologies were contacted as part of compiling information presented in this volume. These included the following:

Manufacturer	American Licensee
Volund (Denmark)	Waste Management
Deutsche Babcock (Germany)	Browning Ferris & American Ref-Fuel
Steinmueller (Germany)	Dravo Energy Resources, Inc.
Von Roll (Switzerland)	Signal Resco

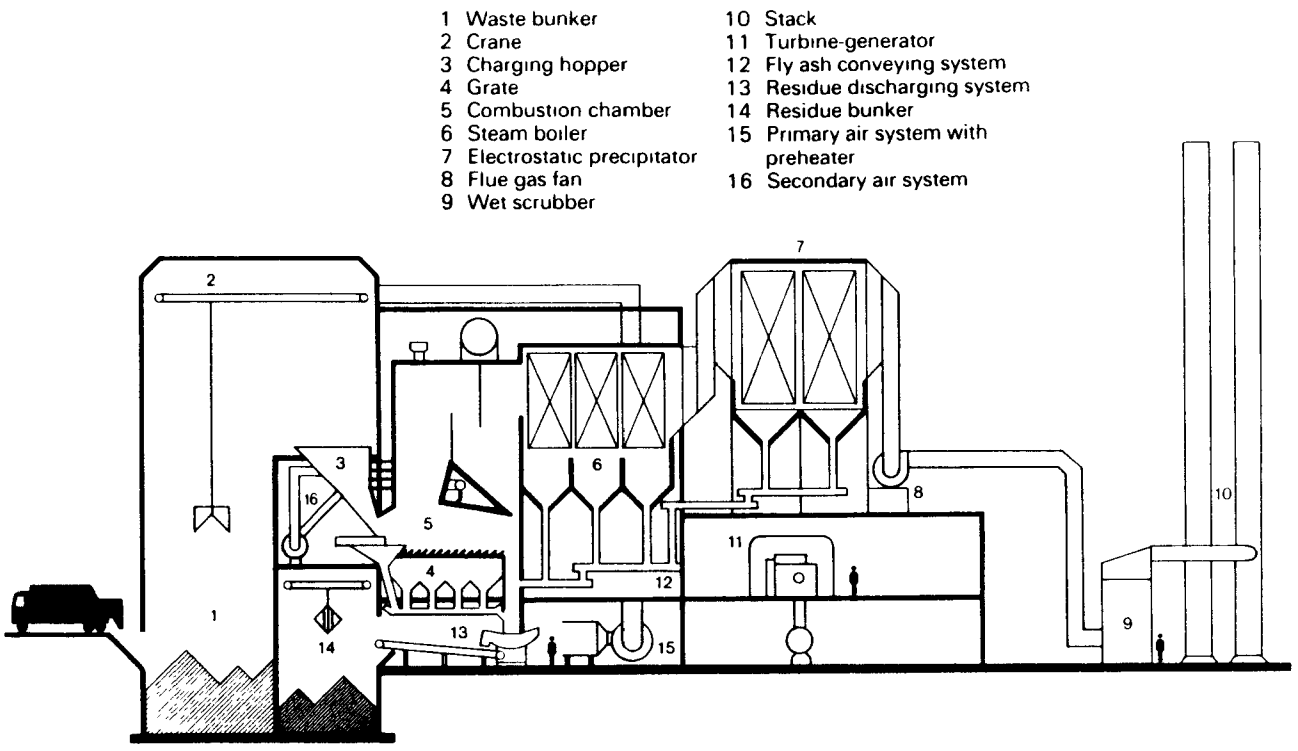

Figure 5-1. Mass burning waste power plant at Widmer and Ernst at Bielefeld-Hertford, Germany.

Manufacturer	American Licensee
Widmer & Ernst (Switzerland)	Blount
Martin (Germany)	Odgen Martin
Riley/Takuma	American-Japanese Joint Technology
Detroit Stoker (Grate Supplier)	
Combustion Engineering (with de Bartolomeis)	
Foster Wheeler (Boiler Supplier)	
Babcock and Wilcox (Boiler Supplier)	
Westinghouse/O'Conner	
Enercon/Vicon	

The topics discussed with these manufacturers were their perception on PCDD/PCDF formation mechanisms, design approaches to prevent PCDD/PCDF formation, and design and operating guidelines that would be useful for minimizing PCDD/PCDF emissions.

The manufacturers all indicated that modern mass burn designs were both capable of and were achieving what they considered to be low PCDD/PCDF emission levels. The current design philosophy relied predominantly on optimizing the combustion zone performance by attempting to maximize combustion efficiency and minimize furnace non-uniformities. Flue gas CO and O_2 were treated as an adequate indicator of combustion efficiency. However,

flue gas concentration of CO was not generally considered to be directly relatable to PCDD/PCDF emissions but rather was used as an indication that the systems, once tuned and adjusted properly, were being maintained in the appropriate operating range.

The key techniques employed to minimize non-uniformities were to optimize the mixing across the furnace generally using secondary air injected at high velocities over the grate region, to optimize the grate and waste feed to obtain uniform bed coverage, and to adjust the combustion zone air distribution to match the air with the burning characteristics of the solid waste. There has been much emphasis on combustion uniformity and techniques to minimize non-uniformities due to the manufacturers desire to minimize fire-side corrosion due to reducing zones. To a lesser extent, some manufacturers expressed the need for sufficient time at temperature or at least sufficient temperature in the upper furnace region. Also, some manufacturers indicated a design philosophy of lowering flue gas temperatures combined with using baghouses to remove particulate matter onto which PCDD/PCDF and other non-volatile hydrocarbons may have condensed.

Individual designer/manufacturers implement the philosophy in different ways. The next sections will highlight the approaches followed by some of the major manufacturers of large mass burn waste-to-energy facilities. It should be indicated that many of the designs originated in Europe where waste-to-energy plants are much more common and the concern for PCDD/PCDF emissions has been factored into the designs for some time. The resulting technologies employ very sophisticated combustion systems and controls along with utility type boiler furnaces. Compared to other types of municipal waste combustion technologies, modern mass burn waste-to-energy systems can be considered to be second or even third generation in terms of designs and operation to minimize PCDD/PCDF emissions. The systems described here represent the most current practice that has been pursued for combustion control of PCDDs/PCDFs. However, it must be pointed out that these descriptions are current design practices and are not indicative of all systems currently operating in the United States.

5.2 Deutsche Babcock Anlagen

The modern Deutsche Babcock Anlagen (DBA) mass burn technology is the result of a significant amount of research and testing of different system configurations. The design features of the DBA mass burn system are highlighted in Figure 5-2 and Table 5-1. One unique feature of the DBA system is the use of a roller grate that carries the refuse down to the next roller grate. Stirring actions occur at the transition between the rollers where the burning refuse can tumble and expose new combustible material.

DBA did not have any di[illegible] cause and effect data for PCDD/PCDF emissions in their design but did have evidence of low emissions with the current design and operating approach. Measurements are available on seventeen DBA plants primarily in Germany for CDD/CDF analysis on ESP dust, residuals, scrubber water and flue gas (DBA, 1986). These data indicate flue gas emissions of less than 10^{-3} ng/m^3 of 2,3,7,8 TCDD for many of the plants. The average total CDD/CDF emission level was 22.5 ng/m^3 for five completely tested facilities.

The DBA design philosophy was oriented towards optimizing combustion efficiency and maximizing uniformity of mixing. The general design criteria included hot combustion temperature, exhaust CO levels of less than 100 mg/Nm^3, high excess air levels (9-10 percent O_2) and prevention of a reducing environment above the secondary air injection point.

A key element of the DBA approach is the use of overfire or secondary air injection schemes which serve to mix all of the furnace gases above the grate. DBA has performed a large number of experiments on different configurations in order to find optimum furnace configurations and injection schemes for overfire air. Experiments have included both cold-flow furnace modeling (water and air) and field in-furnace measurements. The newest design has overfire air injection at a nose in the furnace in which the effluent from the grate is pinched to allow a smaller mixing distance for overfire air. The DBA design uses 25 percent of the air as overfire air and injects it at 100 m/sec. This results in a penetration depth of the overfire

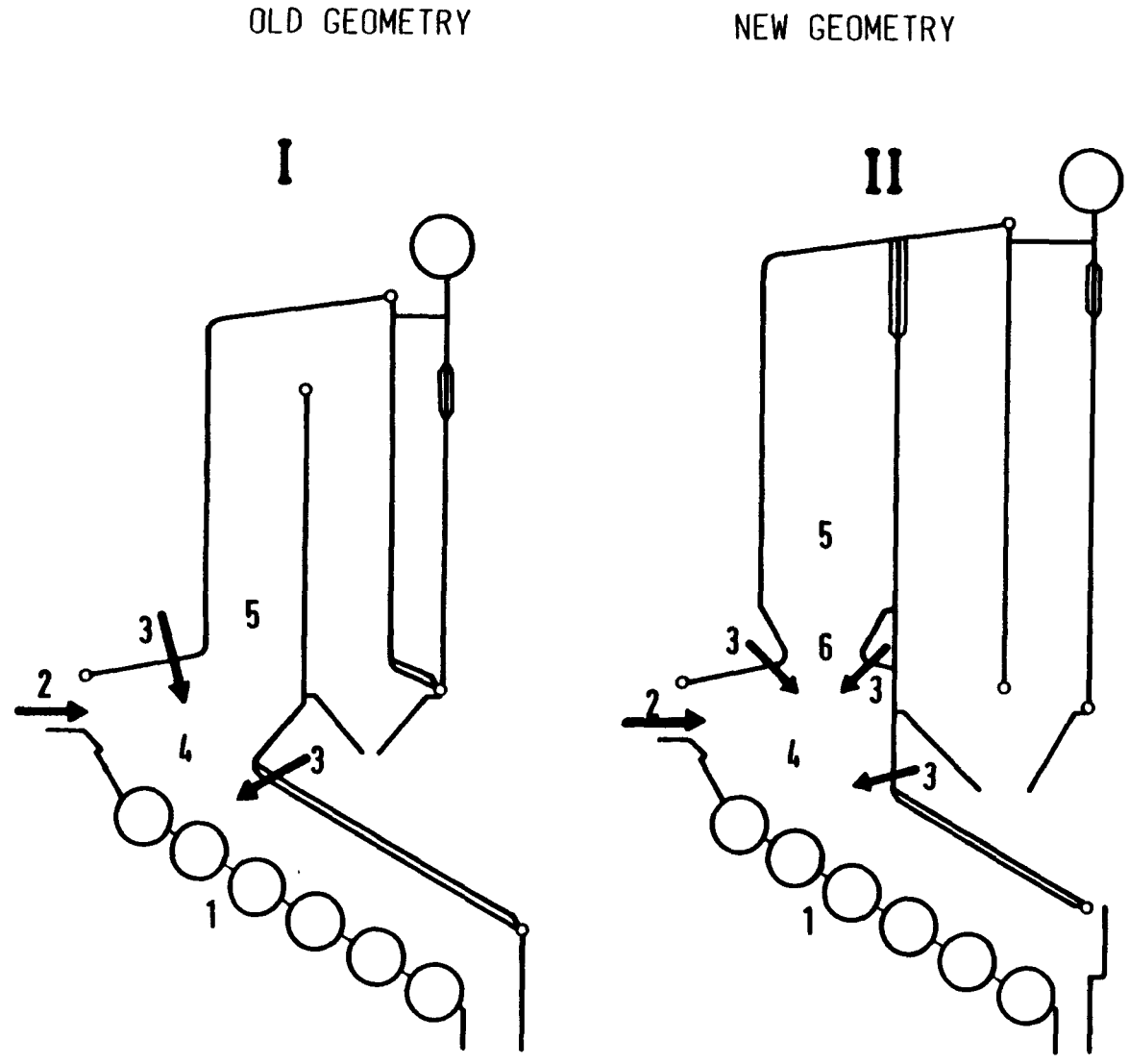

Figure 5-2. Deutsche Babcock Anlagen mass burn furnace design features.

TABLE 5-1. DESIGN FEATURES OF DEUTSCHE BABCOCK ANLAGEN SYSTEMS

- ROLLER GRATE (1)
- FURNACE NOSES (6) FOR MINIMAL SECONDARY JET PENETRATION
- SECONDARY AIR (3)
  - 20-25% OF TOTAL AIR
  - 100m/sec VELOCITY
  - 70% PENETRATION ACROSS FURNACE
- SIDE WALL AIR FLOW (4) (ASPIRATED WALL)
- TIME AT TEMPERATURE ABOVE SECONDARY INJECTION
  - TA LUFT STANDARD
  - SiC CLADDING OF LOWER FURNACE (5) END OF FLAME TIP.

air jets to approximately 70 percent of the distance across the furnace nose. DBA indicated that the overfire air requirements as suggested in previous EPA recommendations of 50 percent of total air flow was felt to be inappropriate. Such high levels would result in poor burnout. DBA expressed the opinion that operation with 20 to 25 percent design air flow capacity air flow as overfire air was appropriate.

DBA has examined the impact of the orientation of the furnace throat relative to the grate and has developed specialized furnace geometries for different refuse characteristics. Three of the configurations are portrayed in Figure 5-3. The configuration names refer to the relative direction of gas flow over the bed to the direction of movement of the solid waste. For example, in the parallel flow configuration, the volatiles released from the thermal decomposition of the solid move in the same direction as the solids due to the presence of a hood or arch over the early region of the grate. In the contra flow configuration, the gas flow is generally in the direction opposite to the direction or movement of solids. The configuration which is considered to be the most flexible is the center flow arrangement which is between the other two extremes. In this configuration the zone of volatile thermal decomposition is arranged just below the furnace throat. The volatile flame can freely develop and overfire air can be added to uniformly mix the material as it enters the radiant furnace region. DBA recommends contra flow configuration for refuse of low calorific value i.e. refuse containing high amounts of water and ash due to the "high pre-drying effects and preparation of the refuse for ignition by recycling hot gas across the first rollers". Parallel flow configurations are reserved for special high volatile MSW or installations that have stringent space limitations. Such special configurations are currently under construction at sites in Germany (e.g. Duesseldorf).

In the DBA design the lower portion of the municipal waste combustor is refractory-clad. The insulation consists of silicon carbide that is directly attached onto the water tubes. The SIC refractory extends up beyond the nose to halfway up the furnace itself. This ensures that sufficient time at temperature is achieved, such that the DBA designs can meet the current

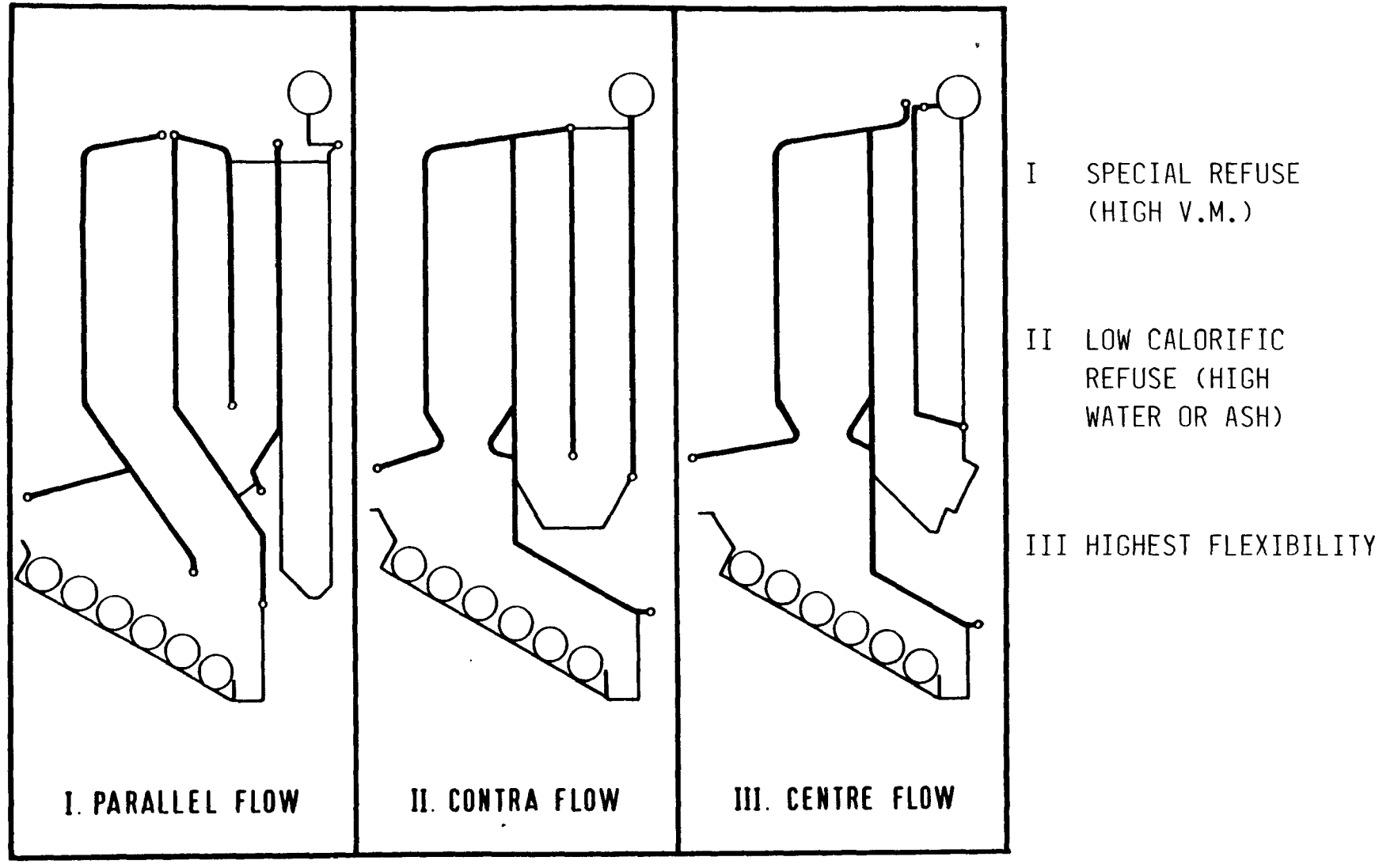

Figure 5-3. Deutsche Babcock furnace geometry selected based on refuse characteristics (DBA, 1986).

German requirements of temperature above the last air injection point (800°C). DBA has examined the previous EPA criteria suggested for "qualifying maximum volumetric heat release" rate and has concluded that the definition of the lower furnace volume is difficult and portions of the volume do not actively participate in the combustion process. The DBA design has a heat absorption rate in the lower furnace region of approximately half of the heat release rate in the upper furnace region. The upper furnace heat release absorption is roughly 48 kcal/m^2.

To monitor furnace operation, DBA uses flue gas measurements of carbon monoxide and oxygen. Carbon monoxide is maintained below the German TA Luft standard of 100 mg/Nm^3 (~80 ppm)and oxygen is generally between 9-10 percent (dry). The stack gas oxygen concentration range suggested by the DBA operating experience is shown in Figure 5-4. The DBA system, as any other mass burn systems, has an optimum operating envelope of excess air as shown in Figure 5-4 as the condition of minimum carbon monoxide. Excess oxygen must be maintained at levels that ensure that all zones within the furnace have sufficient oxygen even with fluctuations in the volatile content of the refuse. However, too high of excess oxygen will excessively cool the combustion zone due to dilution. Finally, it is also a DBA operating practice to only operate at full design load with only slight variations above and below the design conditions.

5.3 Steinmueller

The L&C Steinmueller Corporation is providing the combustion system to Dravo, Inc. who is constructing two systems in the United States in Portland, Maine (500 tpd) and Long Beach, California (1380 tpd). Two other systems are currently in the permit stage in Montgomery County, Pennsylvania (1200 tpd), and Huntsville, Alabama (690 tpd).

The personnel at Steinmueller did not have additional information on direct cause and effect relationships between PCDD/PCDF formation and system design and operation. However, their current practice was found to have average 2,3,7,8 TCDD emissions of less than 0.02 ng/m^3 for several plants in

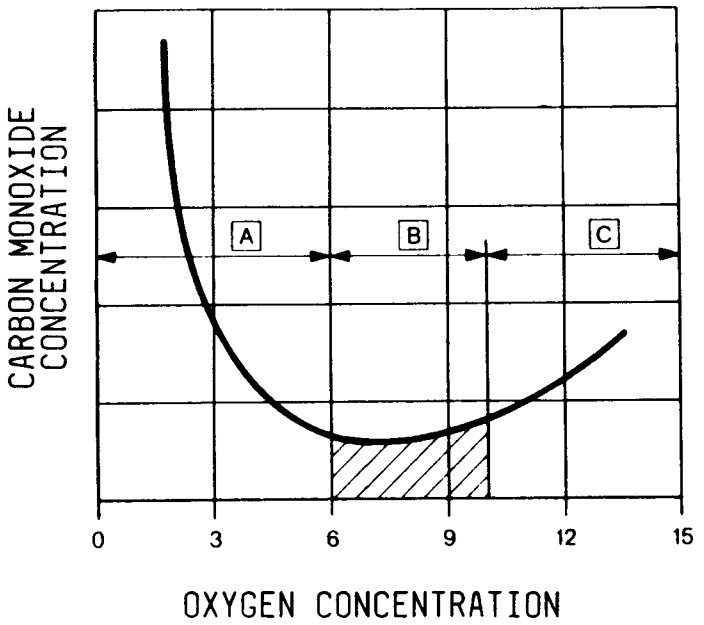

A - INSUFFICIENT AIR $C+\frac{1}{2}O_2 \rightarrow CO$

B - APPROPRIATE OPERATING REGION

C - "COLD BURNING"

Figure 5-4. Relationships of CO and O_2 for appropriate operating regions (DBA, 1986).

Germany (Steinmueller, 1986). Total CDD levels were found to be on average 161 ng/m^3. The Steinmueller approach primarily relied on an optimized firing design with high combustion efficiency and uniform mixing condition. The gas cleanup system is also utilized by Steinmueller as a backup. Either dry scrubbers with baghouses or wet scrubbers with ESPs were used for the Steinmueller installations in Germany. There was concern expressed about whether baghouses with municipal waste combustors was the best application of the technology. For their U.S. projects, Steinmueller/Dravo is using dry scrubbers with either an ESP or a baghouse.

The Steinmueller firing system is portrayed schematically in Figure 5-5 and the key features are provided in Table 5-2. The design employs dual ram feeders onto a forward-push block grate. The grate blocks move in a reciprocating motion and push the refuse down the inclined grate. The radiant furnace was constrained with front and rear wall noses and was centered over the grate. The lower furnace was clad with silicon carbide refractory for corrosion control and to lower heat absorption rates.

A key aspect of the Steinmueller design philosophy is to achieve uniform high temperatures within the combustion volume. Their current design is capable of meeting the German standard of 800°C above the last air injection location. In order to achieve the temperature, the refractory cladding is added to lower the heat absorption rate. Even more importantly, the Steinmueller systems use an optimized furnace configuration and overfire air injection scheme to ensure mixing of volatiles with air and to maintain a high temperature combustion process. The front nose acts to redirect the volatiles into the hot gases from the burnout portion of the grate. Numerous high velocity secondary air jets at the furnace throat are then used to ensure uniform mixing before entering the radiant furnace. The Steinmueller design employs 80 mm diameter secondary jets injected at a velocity of 80 m/sec with a pressure drop of 600 mm of water. The distribution of air was as follows: 60 percent primary, 40 percent secondary, with an operating range of 80 to 90 percent total excess air. This ratio was maintained at all loads. Steinmueller identified as a key problem as the operation of the

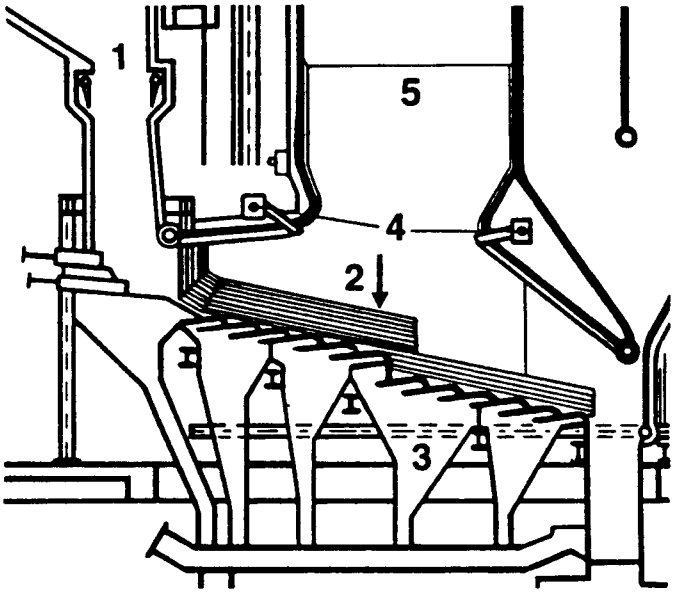

Figure 5-5. The L&C Steinmueller mass burn design features.

TABLE 5-2. DESIGN FEATURES OF STEINMUELLER MASS BURN SYSTEMS

- FORWARD PUSH BLOCK GRATE (2)
- CENTER FLOW FURNACE WITH THROAT
- SECONDARY AIR (4)
  - 80 mm DIA.
  - VELOCITY 80m/sec
  - PRESSURE DROP ~ 600 mm w.g.
  - 40% OF TOTAL AIR
- CLADDING REFACTORY ON LOWER FURNACE (SiC)
- SEPARATE PLENUM CONTROL OF PRIMARY AIR (3)
- CONTROLLED AND UNIFORM FUEL BED DEPTH
- FIVE ADJUSTABLE UNDERFIRE AIR ZONES AND GRATE SECTIONS TO CONTROL BURNING RATE

system at low loads where much poorer mixing was found. Under low load conditions Steinmueller has measured higher CO and oxygen levels.

Steinmueller has relied heavily on extensive cold-flow modeling and in-furnace field measurements to optimize the design and operation of their systems in order to ensure high temperatures and uniform mixing conditions. In Figure 5-6 are provided some representative examples of in-furnace measurements which illustrate the impact of design and operational changes. In Figure 5-6a is shown the detrimental impact of lower load operation. At full load the temperatures in the radiant furnace are between 800 and 1000°C (1470-1830°F) and the plane of CO concentration at 0.1 percent is uniformly spread across the furnace. The furnace CO will continue to oxidize resulting in stack emissions of less than 80 ppm. At lower load operation the upper furnace mixing is much less uniform and the temperatures have dropped by almost 100°C (180°F). The surface of constant CO concentration is shown to be strongly skewed to the front wall of the furnace indicating poor mixing at this reduced load condition. Also, exhaust CO will increase to 196 ppm with spikes as high as 660 ppm. In Figure 5-6b are shown cold flow modeling results on the impact of different combustion air distributions on the mixing patterns. A mixing parameter ("mischparameter") of unity across the furnace indicates a high degree of mixing since all parts of the flow field have an equal concentration of the gas tracer. With normal air distributions through the various underfire plenums and overfire air jets, the furnace uniformity is excellent. In the extreme case of no overfire air, the mixing is extremely poor indicating the important role that the secondary air plays in mixing.

Figure 5-6b also indicates the air control capabilities of the Steinmueller system. The operator has control of the underfire air to five separate underfire air plenums and separately to overfire air jets on the front and rear walls. In this manner the operator has the ability to put the air where combustion is occurring depending on the particular refuse characteristics. The system must be "tuned" to the refuse characteristics at startup of the facility; Steinmueller relies on in-furnace profiles of carbon monoxide as the indicator of the "mixedness" condition at unit startup. High

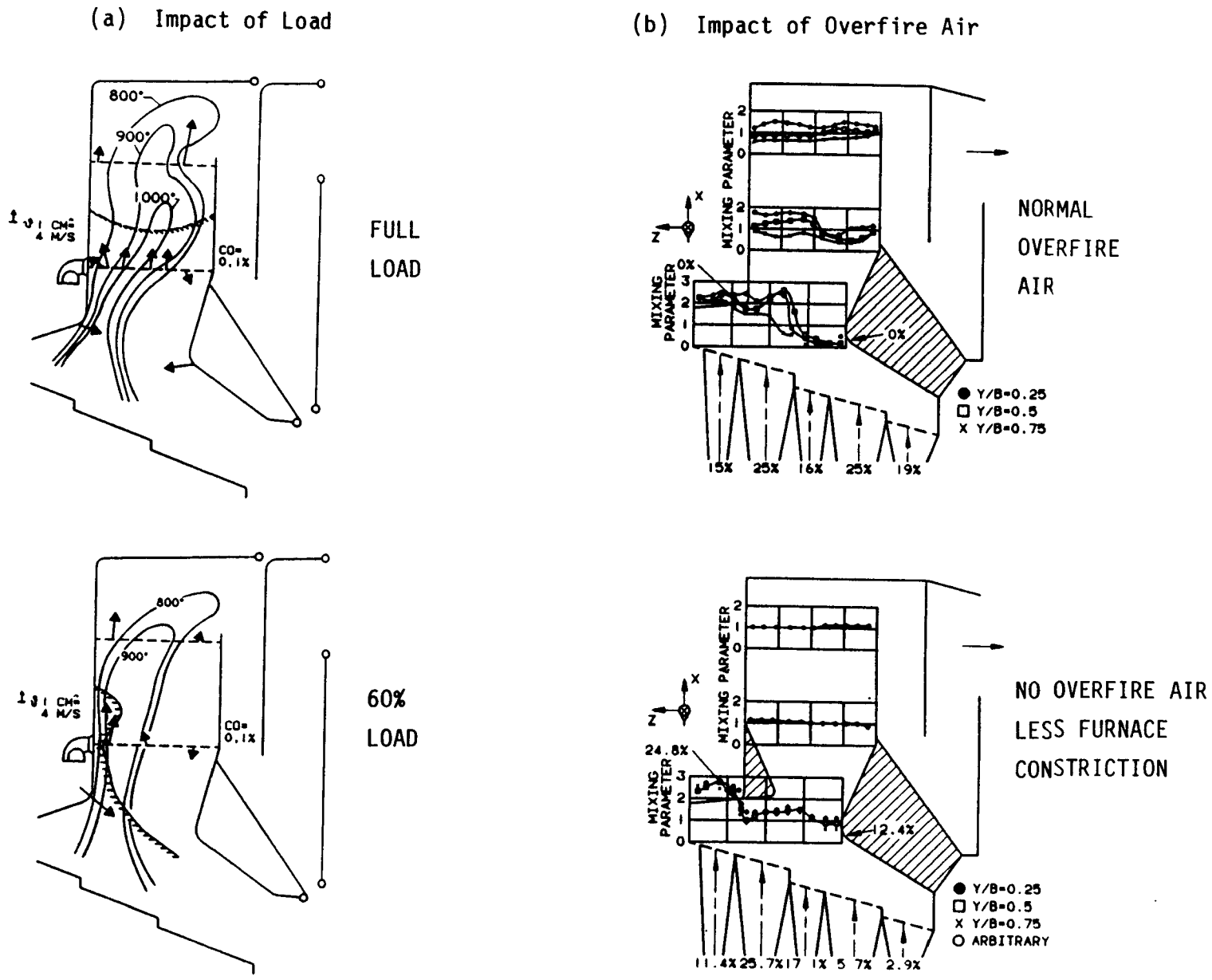

Figure 5-6. Steinmueller in-furnace testing and cold-flow modeling.

CO peaks in the furnace indicates that insufficient air is being put at that certain point. Thus, Steinmueller operational success relies on the combustion air scheme as follows:

- High velocity, multiple jets of overfire air for furnace mixing
- Multiple underfire plenums for air control with independently controlled stoker sections (speed)
- Tuning of air flows using CO profiling as indicator of unmixedness
- Even distribution of air in the fuel bed

Finally, Steinmueller uses carbon monoxide continuous monitoring in the flue gas as an indicator that combustion efficiency is being maintained at a high level. Steinmueller reports that their systems generally have no trouble meeting the TA Luft (German) CO standard of 100 mg/Nm^3 (11 percent O_2) on a 30 minute rolling average.

5.4 Von Roll

Von Roll is one of the larger manufacturers of municipal and industrial combustion plants in the world with more than 170 plants either operating or under construction on five different continents. Signal Resco has the American license for this Swiss (Zurich) technology and currently has a number of plants in operation or under construction in the United States. Signal Resco uses special Babcock and Wilcox boiler designs integrated with the Von Roll grate.

The Von Roll philosophy to prevent PCDD/PCDF and other trace organic emissions is to optimize the refuse combustion system. Von Roll has little cause and effect data available but they do have performance data which indicates that the Von Roll system can be operated with low PCDD/PCDF emissions. Test data supplied by Von Roll (1986) for the Neustadt MSW

combustion plant (225 TPD) indicated total PPDD/PCDF of 88 ng/Nm^3 before the air pollution control device and 13.8 ng/Nm^3 in the exhaust.

The Von Roll personnel were concerned about not only the possibility of in-furnace formation mechanisms but also downstream mechanisms that might occur as a result of catalytic reaction of hydrocarbon precursors on fly ash particles. They indicated that some recent work by Vogg (1986) demonstrated that catalytic transformation could occur in the temperature range of 200 to 300°C (390-570°F). Von Roll expressed the concern that such downstream mechanisms could lead to the presence of PCDD/PCDF on residual fly ash. The Von Roll approach is to design and operate the combustion system such that the destruction of all organics is achieved. If all hydrocarbons are destroyed in the combustion zone then even downstream mechanisms are prevented due to the lack of precursors to be reacted.

The Von Roll criteria for a good combustion environment are as follows:

1. Uniform bed layer on grate

2. Proper air distribution through the bed including very high pressure drops across the grate and multiple plenums

3. Load following and control procedures

4. Avoid slag buildup on the side walls (they use an air aspirated side wall design in Europe although not in the United States)

5. High injection velocity for the secondary air with numerous air jets

6. The amount of secondary air is held constant at 30 percent of the total combustion air

The features of the Von Roll design are provided in Figure 5-7 and Table 5-3. Von Roll believes that one of the most important features of the design

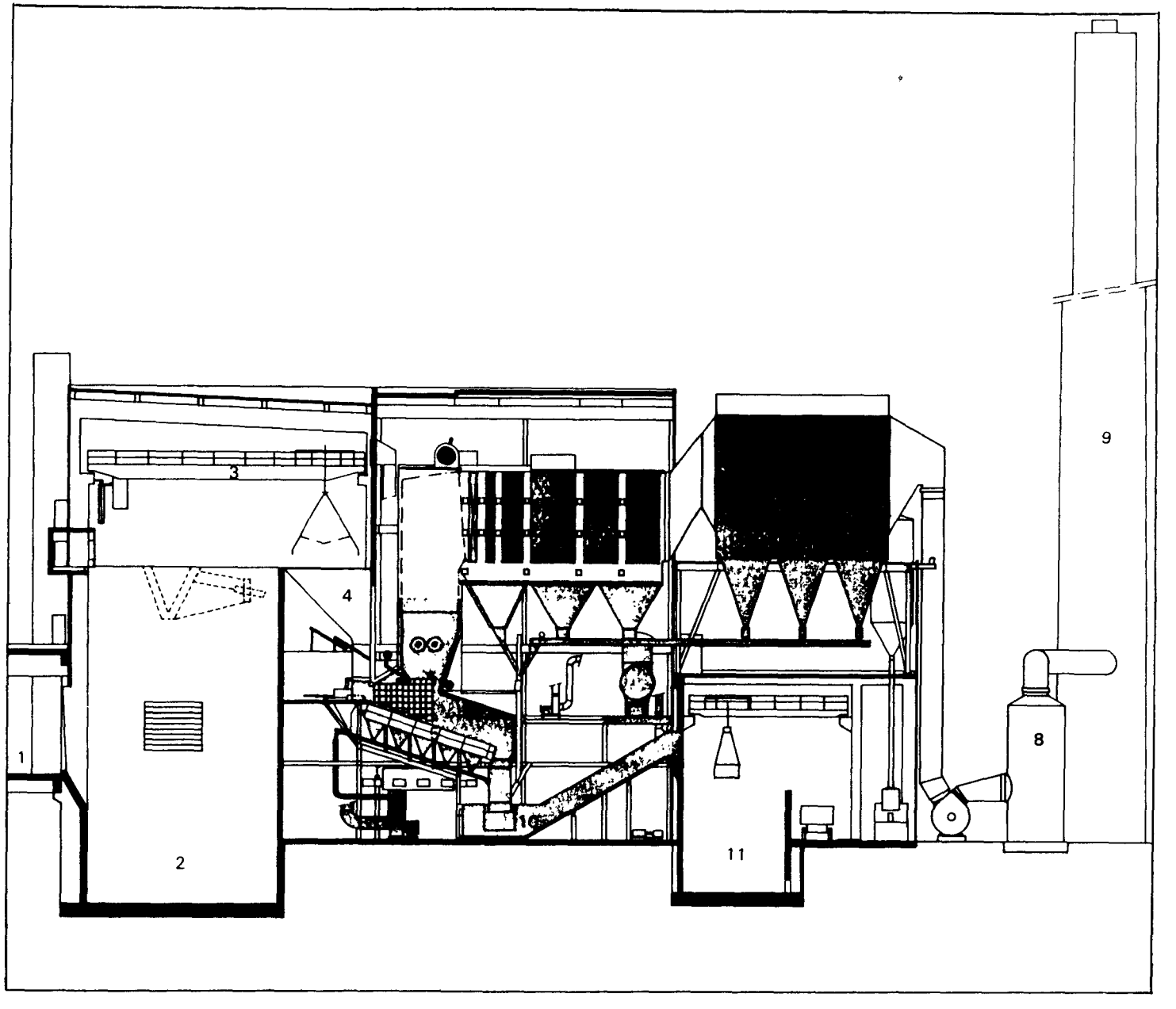

Figure 5-7. Refuse combustion plant with Von Roll two-pass boiler and flue gas scrubber.

TABLE 5-3. DESIGN FEATURES OF VON ROLL MASS BURN SYSTEMS

- GRATE SYSTEM (5)
  - HIGH PRESSURE DROP
  - PUSH BLOCK
  - SEL[illegible]LEANING SLOTS
- CENTER FLOW FURNACE
- PRIMARY AIR
  - 2 x 5 PLENUM
  - SEPARATE CONTROL
- SECONDARY AIR
  - 30% TOTAL AIR
  - 50 m/sec
  - 5 cm dia WITH 1 m SEPARATION
- ASPIRATED AIR SIDE WALL (8)
- SiC CLADDING IN LOWER FURNACES
- ESP PARTICULATE CONTROL

is the grate (Figure 5-8). The grate is designed to have a high air pressure drop. Von Roll feels that with this feature uniform air distribution through the grate can be achieved even with variable thicknesses of refuse on the bed. The underfire air is divided into four to six plenums along the grate with separate air feed control to each region. Larger systems will have two plenums side by side. The air passes through air slots that are self-cleaned by the movement of the grate blocks. The grates are forward-push reciprocating blocks with a steep inclination angle. For lower calorific refuse a modified grate is utilized wherein steps are present along the grate to ensure breakup of clumps of refuse.

The second feature of the Von Roll system that is important is the mixing level within the furnace. Overfire air jets are used as the primary means to ensure adequate furnace mixing. The penetration of the secondary air jets across the furnace which is dependent upon velocity and size of the jets, is crucial to the successful performance of the system. Von Roll has performed full-scale tests in order to optimize the design and operation of the overfire jets. The current Von Roll design is provided in Table 5-3 and the orientation of the jets relative to the furnace nose is shown in Figure 5-7. An array of complex injection schemes has been developed with multiple rows and nozzle diameter to achieve adequate penetration and coverage of the flow. In-furnace profiling of carbon monoxide concentrations performed during system start-up is used as the indicator of proper air distribution and mixing. The various air flows are adjusted to minimize CO peaks. The CO profiling and air adjustment is performed both at unit startup and annually. Von Roll relies on exhaust CO concentration measurements as an indicator that the system, once tuned, is being maintained in the proper operating envelope. However, Von Roll does not use exhaust CO as an indicator of trace organic or PCDD/PCDF emissions. According to Von Roll, the typical operating range for CO is in the range of 50 ppm.

The final important feature of the Von Roll system is the combustion control system. All waste-to-energy systems must have combustion controls that respond to changes in steam demand and account for the variability of the fuel characteristics of the refuse. In the Von Roll system the steam

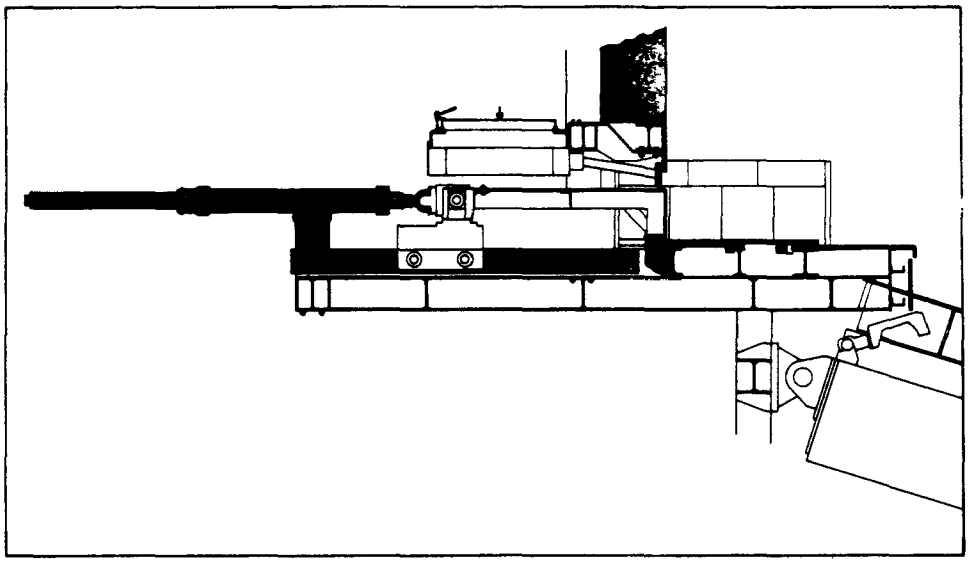

Von Roll refuse feeding device

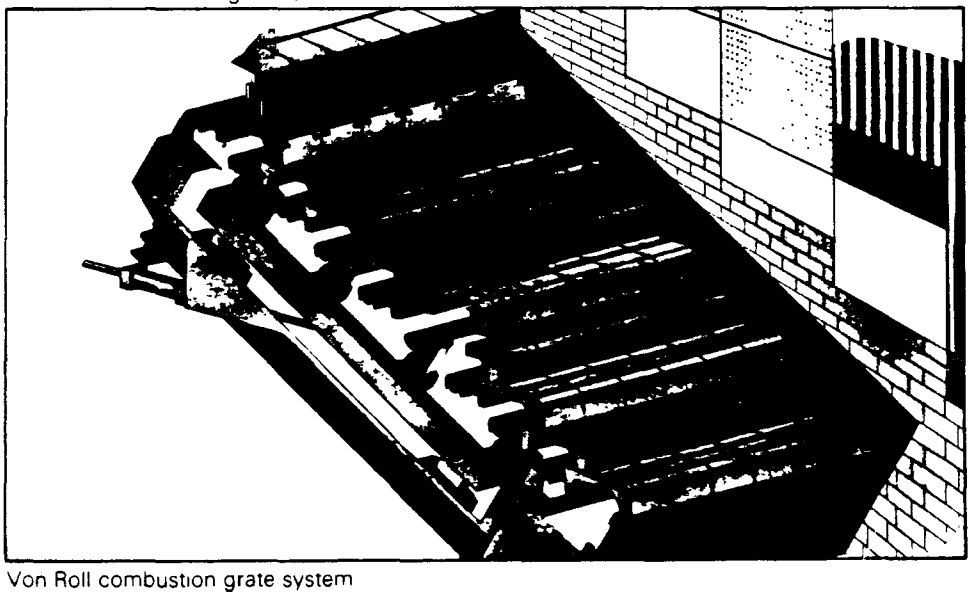

Von Roll combustion grate system

Figure 5-8. Details of Von Roll grate and feeding devices.

production rate is monitored and control of the ram feeder frequency is modulated along with the primary air to the middle region of the grate (burning region) to maintain the correct steam rate. Von Roll systems also include furnace temperature monitoring using thermocouples in the roof of the radiant furnace (previously corrected for radiation by comparison to suction pyrometry measurements). Furnace temperatures are used to control the secondary air flow rates. For example, if steam production rate goes down, then primary air is increased in the middle grate region; if temperature goes down, then secondary air flow is decreased. The grate movement rate is not automatically controlled but is manually adjusted depending on the refuse burnout characteristics. Preheat air is also started manually for wet refuse. Finally exhaust oxygen is measured but is not used in the automatic control system.

The Von Roll system also uses automatic control for auxiliary burners. Secondary burners will automatically fire when CO levels exceed 80 mg/Nm^3. It is a TA Luft (German) regulation that there is capacity for 60 percent of the load as auxiliary fuel with startup at high CO and during system startup.

5.5 W+E Environmental Systems Ltd.

W+E Environmental Systems Ltd. (Widmer and Ernst) is a wholly-owned subsidiary of Blount Inc. (Montgomery, Alabama) and is located in Zurich, Switzerland. The W+E design is portrayed in Figure 5-9 and details of the design are provided in Table 5-4. The W+E design has a unique grate. The grate is horizontal with the reciprocating blocks pushing the refuse over the next block in what is termed an "overthrust" motion. The double motion overthrust tends to first drop ignited particles as the block moves out from under the layer and then pushes the ignited particles back underneath the non-burning waste layer. The ignited material is constantly pushed downwards by intensely rotating and stirring the waste layer and forcing ignition to start at the bottom of the bed. The air slot design causes a high pressure drop across the grate and ensures uniform air flow. High air velocities at the slots also prevents blockage of the slots. The relative movement of blocks acts to continually clean the grates and acts to keep them open. The

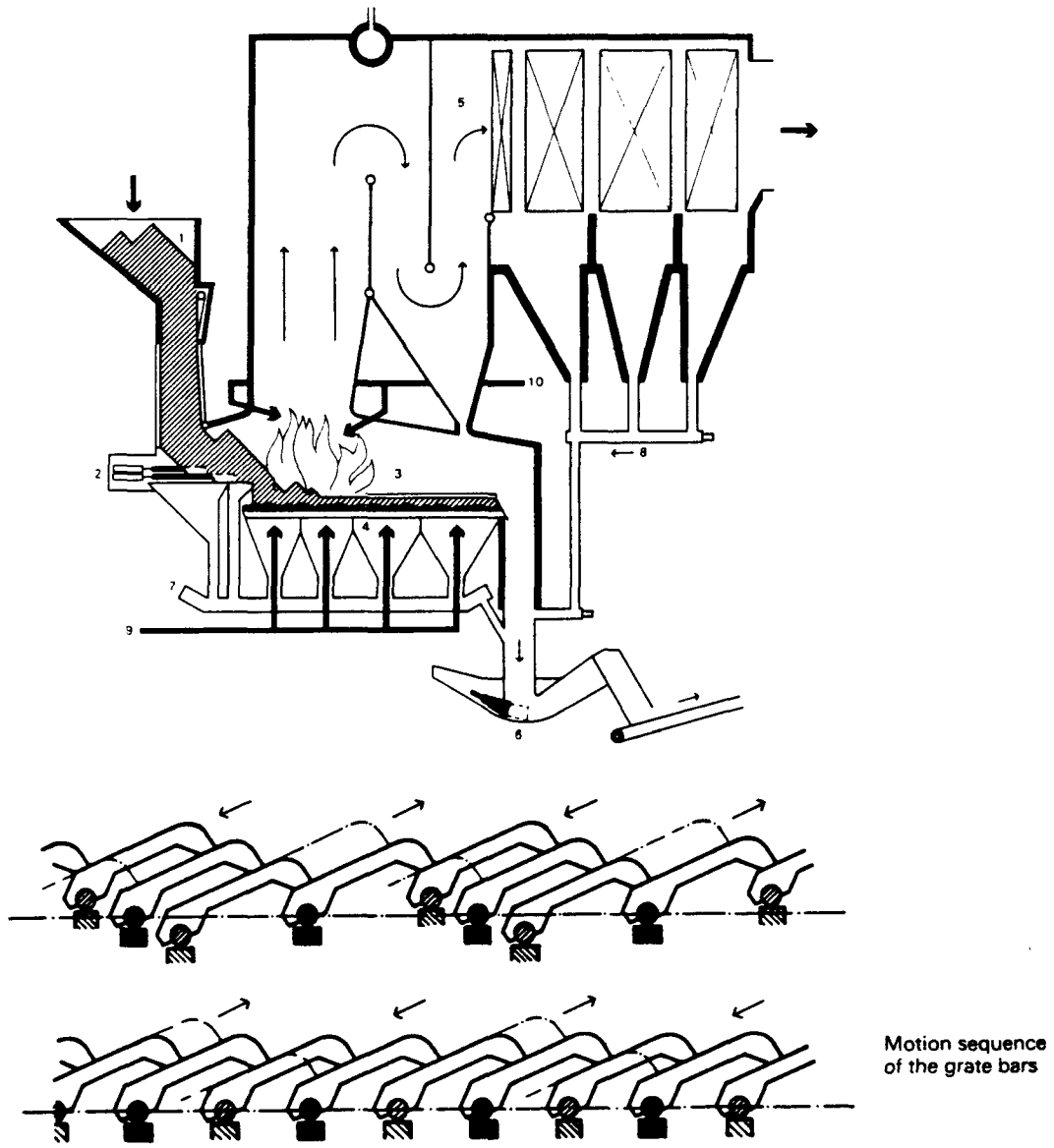

Figure 5-9. W+E combustion system and overthrust grate design.

TABLE 5-4. DESIGN FEATURES OF W+E MASS FIRED SYSTEM

- GRATE (3)
  - HORIZONTAL
  - "OVERTHRUST" MOTION
  - SLOT AIR - SELF CLEANING
- CONTRA FLOW FURNACE WITH MINIMAL CONSTRICTION
- PRIMARY AIR (9)
  - SEPARATE PLENUM CONTROL
  - HIGH PRESSURE DROP
  - 80 - 90% OF PRIMARY TO FIRST 2 ZONES
- SECONDARY AIR INJECTORS (10)
  - 80 m/sec
  - 70 mm dia
  - FRONT AND BACK WALLS INTERLACED
  - 30% OF TOTAL AIR
  - OFFSET VORTEX
- SiC CLADDING TO 10 m

underfire (primary) air is introduced through four to five separately controlled plenums along the grate.

Another unique design feature of the W+E system is the overfire air injection scheme. As with most of the other mass burn systems the overfire air injection is primarily used for furnace mixing and flame height control. High velocity air jets on the front and rear walls are employed to achieve jet penetration across the furnace and coverage of the entire furnace flow. The front and rear wall jets are not directly opposed but rather they are staggered to achieve an "interlacing" of the air streams. In addition, some configurations include directing the jets to a firing circle which creates a vortex motion in the region adjacent to the overfire air jets. W+E has suggested that this rolling vortex zone arrangement lowers particulate emission apparently because it serves as a "centrifugal bottle" to particle carryover. W+E has also examined the impact of furnace design such as furnace noses at the overfire air injection point. No enhancement in mixing was achieved with these noses alone; however, the noses provided less penetration differences for the overfire air jets.

Thirty percent of the total combustion air was used in the overfire injection with an 80 to 100 percent overall excess air. The overfire air velocity has recently been increased from 50-60 m/sec to approximately 80 m/sec (at full load conditions). This change was introduced to improve low load operation where overfire air jet velocities will decline. W+E indicated a belief that such overfire air design improvements have direct impacts on PCDD/PCDF emissions. W+E quoted test results which indicated a five-fold decrease in PCDD/PCDF emission levels with these modifications with no measurable change in CO emissions (W+E, 1986).

The proper air distribution into underfire plenums and overfire air jets is established at startup by in-furnace CO profiling and air adjustments to minimize CO concentration peaks. Once the system is tuned to the characteristics of the refuse, then W+E relies on exhaust measurements of CO as an indicator of continuing performance. Under optimal conditions CO levels as low as 20-30 ppm could be achieved. Based on W+E experience, CO is

used only as an indicator of insufficient air or bad combustion conditions. For exhaust concentration of CO less than 250 ppm, W+E believes that no correlation exists between exhaust CO and PCDD/PCDF emission. However, some correlation was suggested to exist if CO was greater than 250 ppm, i.e. if the system was clearly being operated in a failure mode. W+E has some experience with the use of total organic carbon as an indicator of PCDD/PCDF emission. W+E suggests that total organic carbon is directly related to PCDD/PCDF emissions.

The current W+E furnace configuration (see Figure 5-9) could be classified as a "contra flow" arrangement (compare to Figure 5-3). W+E are currently performing detailed studies of the necessity of such design features. Specifically, W+E are investigating all three types of configurations, parallel, center and contra, to determine whether such design modifications will improve performance and the cost impacts.

The W+E facilities employ an automatic load control system. The current systems have both control and upset loops. The primary control loop monitors the steam production rate and controls the ram feeder, grate speed and air flows. Oxygen is monitored and if the value falls below a set value (typically 6 percent) alarms will sound and feeding of the grate will be stopped. If furnace temperature falls below 800°C then auxiliary burners will be started automatically. Finally if load falls below 60 percent of design, then the system will shut down. Future control loops will focus on the use of furnace temperature monitoring and control of primary air. This new emphasis is to allow extensions to lower load operation.

5.6 Martin GmbH

Martin GmbH (Germany) with its partners Ogden Martin (Paramus, NJ) and Mitsubishi Heavy Industries (Japan) have constructed 130 refuse burning and energy recovery facilities. This includes 250 operating units with a combined burning capacity of over 75,000 tons/day. Martin Systems is one of the largest manufacturers of mass burn municipal solid waste-to-energy plants. Martin systems have been tested for PCDD and PCDF emissions in both

Europe (e.g. Wurzburg, Stockholm and Munich plants) and the United States (e.g. Chicago, Marion County and Tulsa). Some of these data are available in the comprehensive municipal waste study series. The total PCDD/PCDF emissions vary from 50 to 150 ng/Nm^3 for systems with ESP particulate control and less than 5 ng/Nm^3 for the system with a dry lime dust baghouse combination (Martin, 1986).

The design features of Martin refuse combustors are shown schematically in Figure 5-10 and design details are provided in Table 5-5. The Martin design philosophy for the minimization of trace organic emissions is described in Martin technical literature (Martin and Schetter, 1986) and relies on optimization of the combustion process. The Martin approach to minimize organic emissions focuses on the prevention of any hydrocarbons leaving the combustion zone and in that manner minimize downstream formation of PCDD/PCDF by eliminating PCDD/PCDF precursors. The approach is based not on one feature alone but rather to the combined aspects of the Martin combustion system.

One of the main features of the Martin system is the grate shown in detail in Figure 5-10. The grate is inclined downwards from the feed end at an angle of 26 degrees. The grate blocks are "reverse acting" i.e. they are pushing counter to the direction of overall refuse movement. This action forces burning refuse back underneath freshly fed material and promotes more complete burnout.

The grate underfire air is introduced through gaps at the sides of the head of grate blocks which are 2 mm wide. The gap area is small enough so that the grate has a high pressure drop and therefore there is uniform air distribution through the refuse layer regardless of the refuse bed thickness. The underfire air is divided into 5 to 6 zones along the length of the grate through the use of separately controlled plenums. For larger systems, the air plenums are doubled with side-by-side plenums. The underfire air to each plenum is individually controlled by dampers and flow orifices for each grate section.

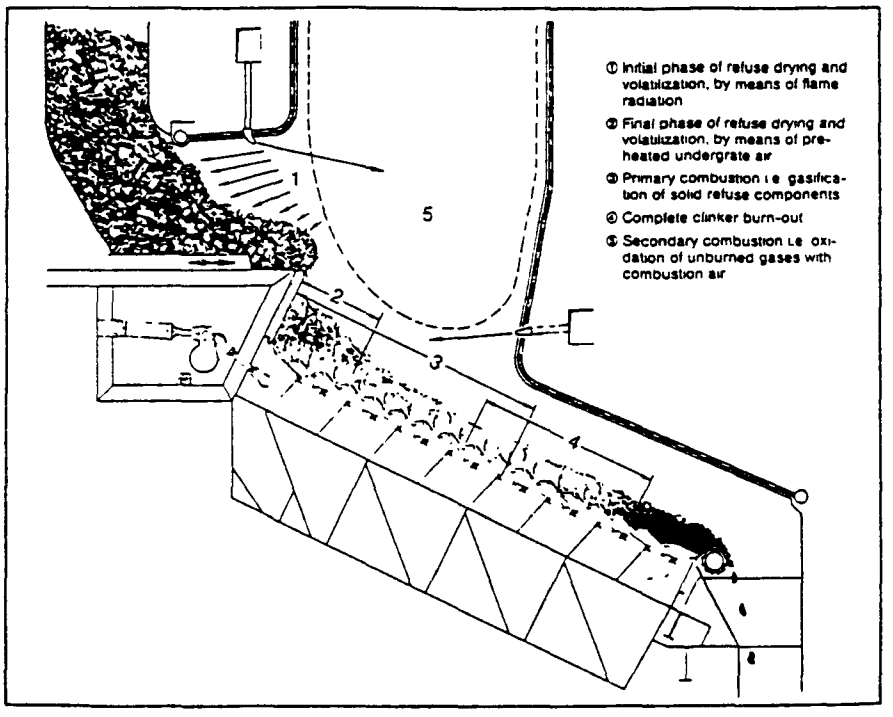

Concept of Martin Refuse Combustors

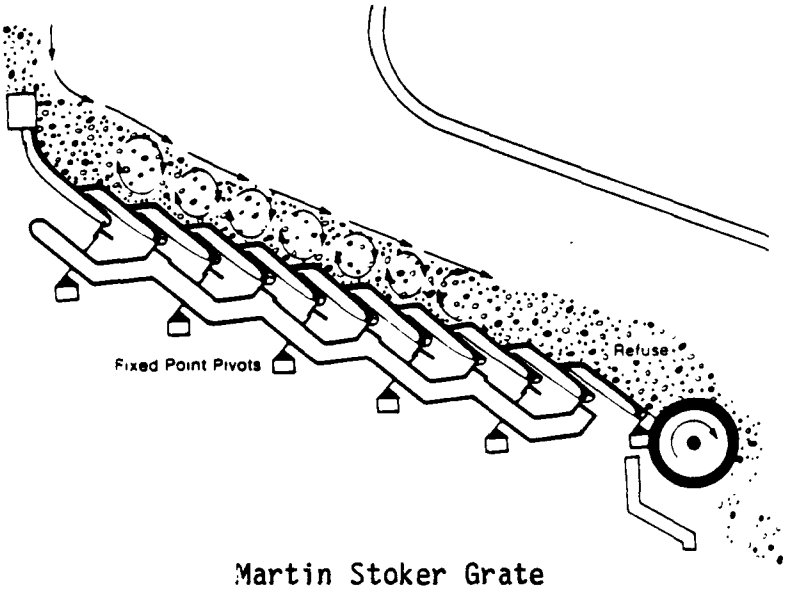

Martin Stoker Grate

Figure 5-10. Design features of Martin Refuse Combustors.

TABLE 5-5. DESIGN FEATURES OF MARTIN REFUSE COMBUSTORS

- GRATE
  - REVERSE ACTING
  - AIR SLOT, SELF CLEANING
  - STEEP INCLINATION

- CONTRA FLOW FURNACE WITH MINIMAL CONSTRICTION

- PRIMARY AIR
  - INDIVIDUAL PLENUMS
  - HIGH GRATE PRESSURE DROP

- SECONDARY AIR
  - 20-40% OF TOTAL AIR
  - FRONT AND BACK WALLS
  - 2 - 4" (50-100mm) DIA
  - 450 mm w.g.

- SiC CLADDING OF LOWER FURNACE

An important aspect of the Martin approach is the "penetration of air into all volatilization products" and the use of secondary air nozzles to "increase the degree of turbulence in the flame area". The current secondary air nozzle design should actually show in Figure 5-10 two rows of air nozzles on the front wall, below the front arch, for refuse with higher volatile content. The adaptation of the secondary air injection scheme from older designs burning lower volatile refuse to designs for higher volatile matter is shown in Figure 5-11. The amount of overfire air is between 20 and 40 percent of the total combustion air (100 percent excess air).

Another important aspect of the Martin approach designed for low emissions are combustion control systems which attempt to reduce the disturbances resulting from changes in refuse characteristics and limits load variations. New Martin facilities have automatic combustion control systems which consist of two independent loops (see Figure 5-12). The first loop monitors wet flue gas O_2 (Zirconium oxide probe) and controls the refuse ram feeder and grate speed to control MSW feed rate. The second control loop monitors steam production rates and controls underfire to maintain desired steam production rate. Development work is continuing on the combustion control system including monitoring on furnace temperature and controlling secondary air. Finally the Martin combustion control approach is to limit load variations to 85-110 percent of design full load.

The newest Martin design also employs air pollution control devices (APCD) as a removal technique for PCDD/PCDF species. For example, Martin plants at Wurzburg, Stockholm and Marion County, Oregon have dry scrubber/ baghouse combinations. This APCD technology has been operating successfully for three years and available data indicates significant reduction in PCDD and PCDF emissions. For example, total PCDD/PCDF emissions data from Stockholm at the baghouse inlet were 74 ng/Nm^3 while after the baghouse, the emissions were less than 5 ng/Nm^3 (Martin, 1986).

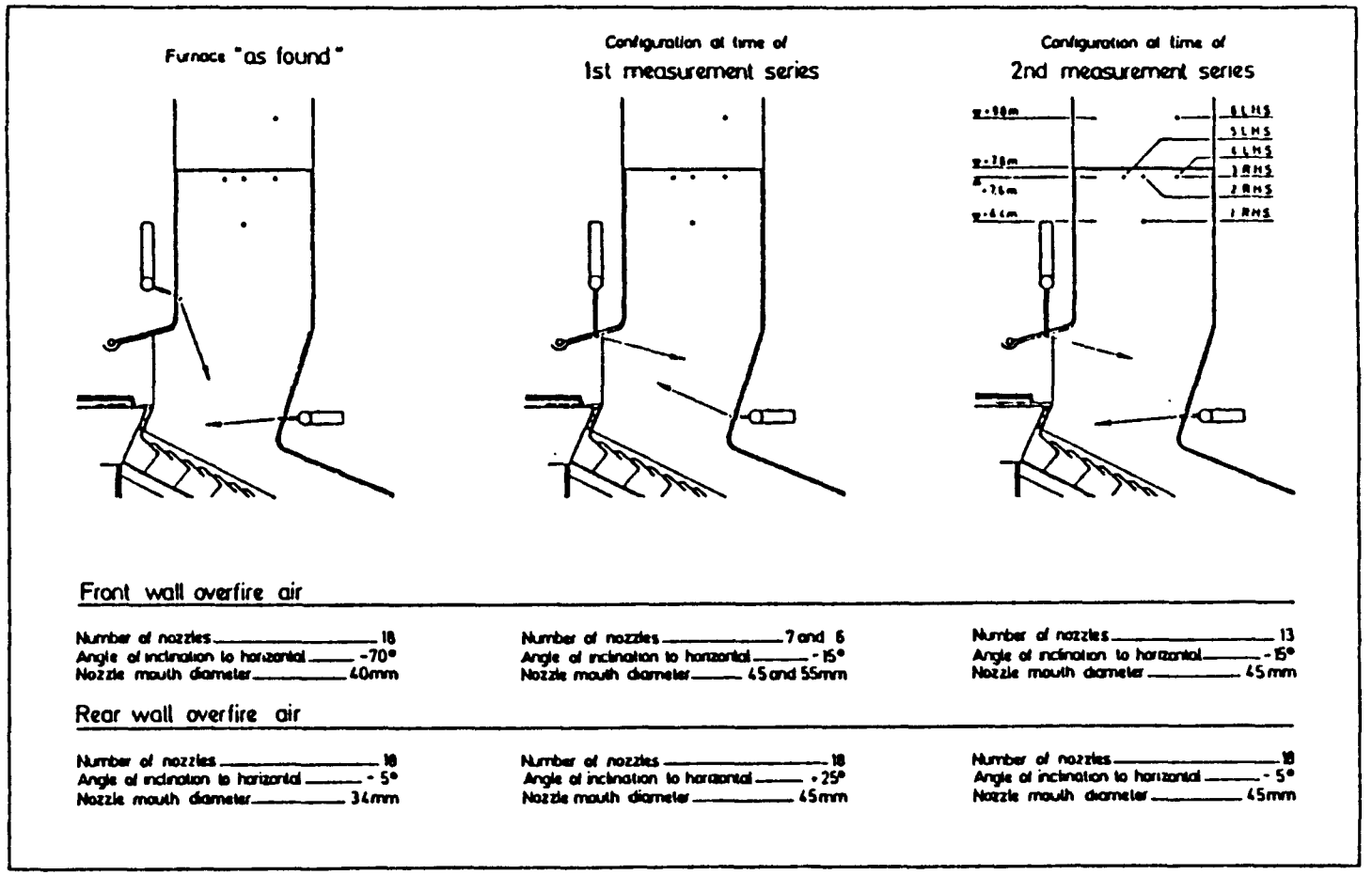

Figure 5-11. Adaptation of secondary air injection to changed refuse conditions in Martin Systems.

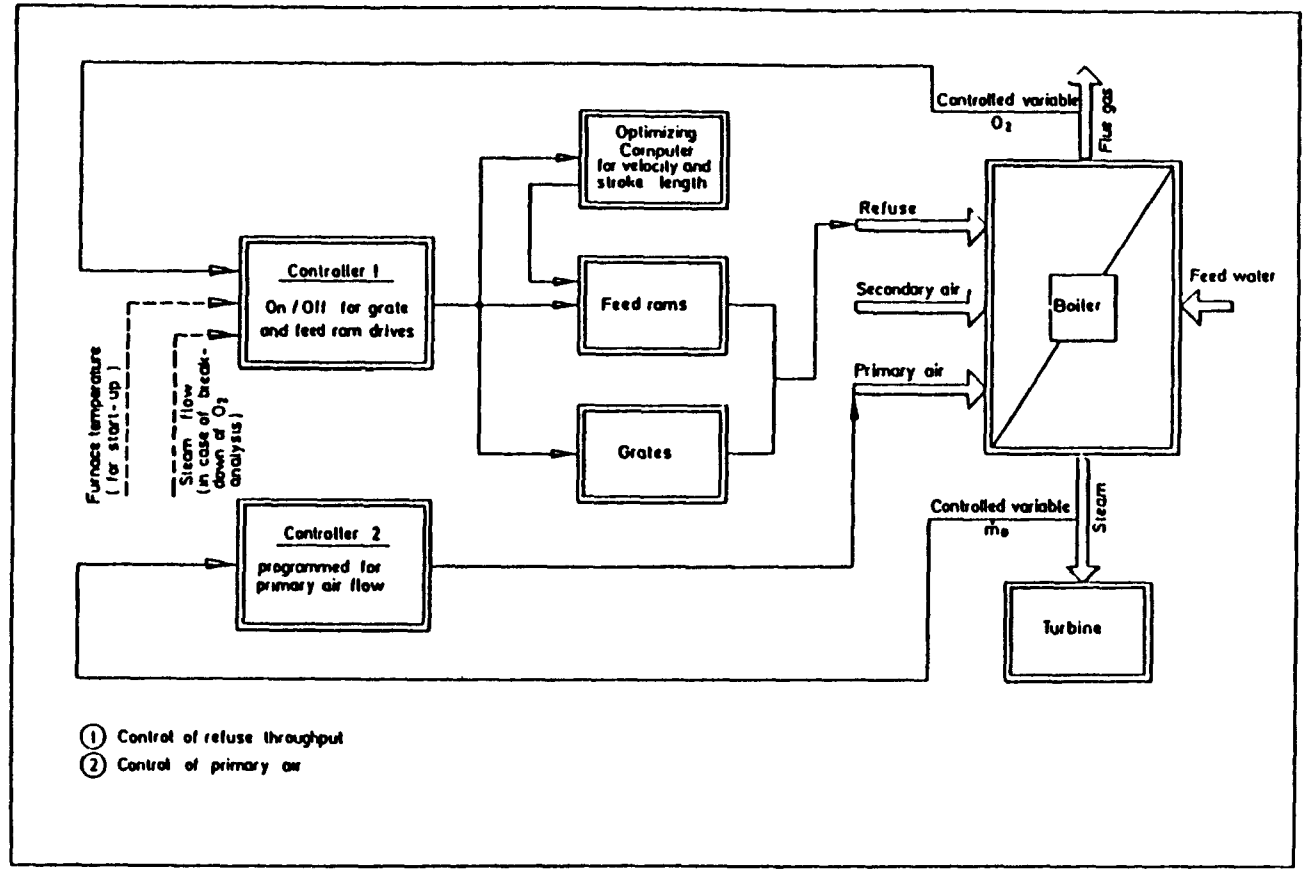

Figure 5-12. Martin Combustion Control System for mass burn combustors.

5.7 Volund

Volund, located in Denmark, has an installed capacity of over 29,000 T/d in 129 operating plants in Scandanavia, Europe, Japan and the orient, and in the United States. In the United States, Waste Management has the technology license and has a new operating plant in Tampa using the Volund system. Volund provides a combustion system that is distinct from other European mass burn technology. Two separate concepts are available depending on the refuse characteristics as shown in Figure 5-13. For difficult to burn materials such as vegetables, coarse pieces of wood, and high water content refuse, a rotary kiln is added at the exit of the traditional grate region. In addition, the lower furnace is constructed of high grade, low conductance refractory not SiC clad water tubes as in other European designs. The combustion zone also includes a refractory arch which tends to keep radiation heat losses from the burning zone to a minimum. Hence, the combustion zone temperature is somewhat elevated over waterwall systems. For these reasons, Volund Systems can achieve impressive solids burnout levels.

The features of the Volund System are provided in Table 5-6. The Volund grate is a forward-push, tilted design with longitudinal fixed and movable beams. Underfire air is introduced between the beams and is controlled by three separate plenums. The Volund System has a relatively low air pressure drop across the grate and relies on the even distribution of refuse on the grate to ensure uniform air flow. The secondary air is added into the primary zone over the grate region using overfire air jets and aspirated side walls.

Volund System designers indicated that good mixing in the various zones is a key factor to controlling the emissions of trace organics. Volund's approach, after extensive water-table flow modeling studies, has been to position the refractory arch above the grate which splits and guides the buoyantly rising gases such as to stimulate mixing. The Volund furnace is oriented above the discharge area of the grate. Mixing is augmented by the introduction of overfire air but not dependent upon it.

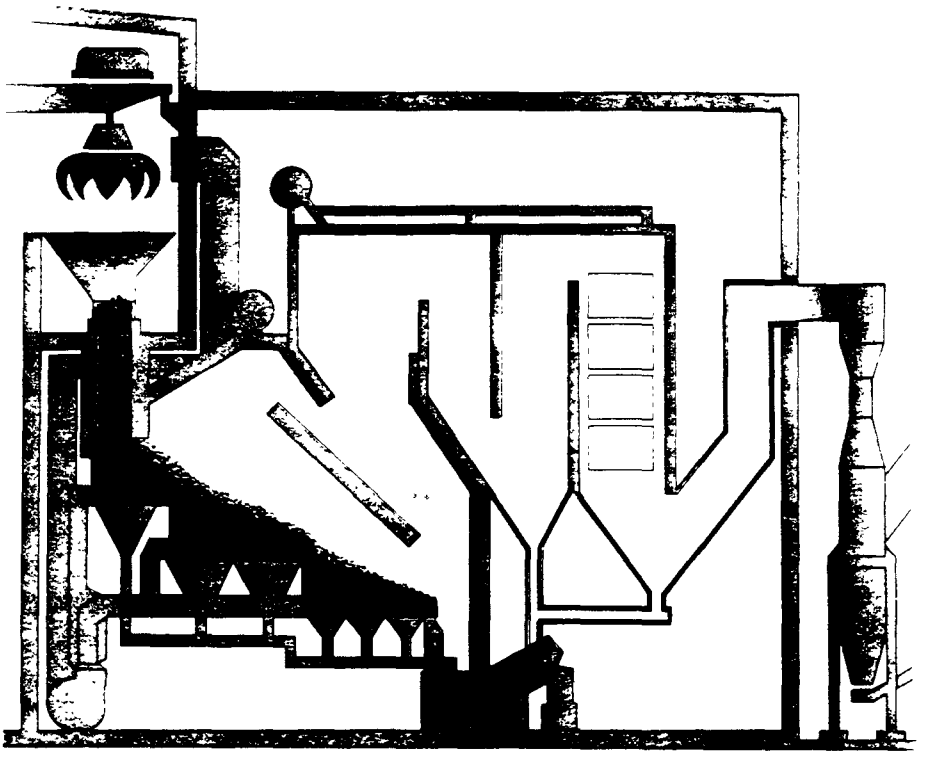

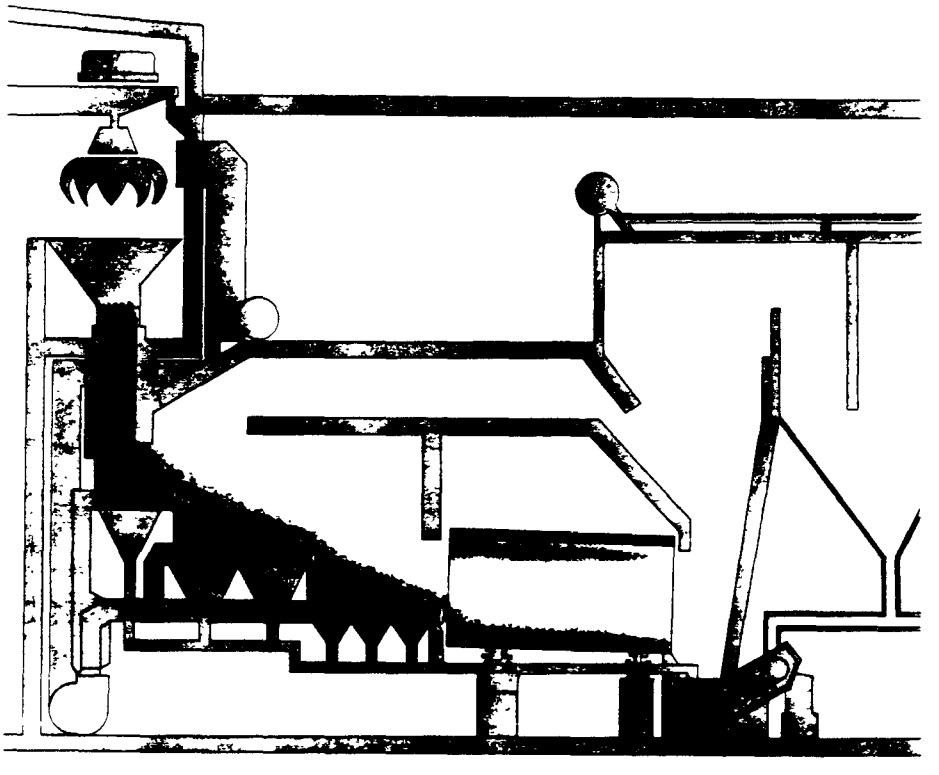

Figure 5-13. Volund System mass burn design features.

TABLE 5-6. DESIGN FEATURES OF VOLUND MASS BURN SYSTEMS

- GRATE
  - FORWARD PUSH
  - GRATE BARS
  - AIR SLOTS BETWEEN BEAMS
- PRIMARY AIR
  - LOW PRESSURE DROP ACROSS GRATE
  - MULTIPLE PLENUM CONTROL, GENERALLY 4
- SECONDARY AIR
  - INTO PRIMARY COMBUSTION ZONE
- EXCESS AIR 80-120%
- FURNACE CONFIGURATION
  - BLOCK REFRACTORY LINED LOWER FURNACE
  - REFRACTORY ARCH WALL
  - ASPIRATED AIR SIDE WALL
  - UPPER FURNACE WATER WALL
- APCD CONCEPT
  - FGR FOR NO_x
  - ESP FOR PARTICULATE
  - HCl WET, SEMIWET, DRY SYSTEMS
- TIME AT TEMPERATURE
  2.2 SECONDS $> 1000^{o}C$

The higher temperatures achievable in the Volund System could potentially increase NO_x formation. Volund can incorporate a flue gas recirculation technique to moderate temperatures in the combustion zone to effectively reduce thermal NO_x. For particulate and acid gas removal, Volund offers a variety of air pollution control device configurations. These configurations include wet scrubbers alone with flue gas reheat, semi-dry (spray dryers) with either ESP or baghouses, and dry injection of calcium compounds again with either baghouses or ESP.

Volund has undertaken a series of emission tests at one of the representative plants to examine the impact of startup and load changes and the relationships between temperature and carbon monoxide to PCDD/PCDF emissions. These data clearly indicated lowering of 2,3,7,8 TCDD emissions as time progressed after startup; almost an order of magnitude lower 2,3,7,8 TCDD emissions were achieved in 10 hours after startup versus 1 hour even though the average temperature increased only slightly in the same period. For example, the emissions of 2,3,7,8 TCDD dropped from 2.5 ng/Nm^3 at 1 hour after startup to 0.4 at 5 hours and 0.33 ng/Nm^3 at 10 hours after startup (Volund 1986). However the minimum temperature measured did increase significantly (~150°C, 270°F) in the same period indicating the minimum temperature pathway must be considered in PCDD/PCDF destruction. With decreasing load to 70 percent, the 2378 TCDD and total PCDD/PCDF increased by a factor of 2 (from 0.17 ng/Nm^3 to 0.39 ng/Nm^3 for 2,3,7,8 TCDD). These data have also indicated to Volund that CO in the flue gas of a well designed plant can be used as a measure for monitoring and control since it closely tracked PCDD/PCDF emissions. For example, just after ignition, CO levels were near 1000 ppm without auxiliary fuel start-up while after 10 hours exhaust CO were below 100 ppm (Volund, 1986).

5.8 Riley/Takuma

The Riley Stoker Corporation is a major United States manufacturer of boilers and combustion hardware. Their first major entry into the MSW area was through the facility at Braintree, Mass. which began operation in 1971. That facility incorporated a Riley boiler as well as a Riley horizontal

traveling grate. That grate design was a direct adaptation of the Riley stokers for coal and wood-fired boilers. Turner (1982) provides a thorough review of the Braintree facility's operating history.

Riley Stoker is currently involved in at least five (5) MSW projects (Riley, 1986). Two of these projects involve use of Riley Stoker boilers coupled with grates from Ogden/Martin. The general design and operating features of facilities using Ogden/Martin grates were discussed earlier in this chapter. Another project - Jackson County, Mich. - represent the combination of a Riley boiler and the Takuma grate. Riley has licensed the Takuma grate which is a Japanese developed design.

The Riley/Takuma approach to minimization of PCDD/PCDF and other trace organics is to optimize the refuse combustion system. Riley personnel expressed an opinion that the published data base is not sufficient to correlate PCDD/PCDF emissions with operating performance parameters (e.g., stack CO emissions or maximum qualifying volumetric heat release rate). They feel that the basic design features of the Riley/Takuma firing system, coupled with a sophisticated automatic combustion control (ACC) system, will provide burning conditions sufficient to minimize unburned hydrocarbon species emissions. The system is designed to maintain at least a one-second residence time above 1800°F as required by several State emission regulatory bodies.

Basic features of the Riley/Takuma firing system are illustrated in Figure 5-14 and Table 5-7. As shown, there are four grate sections including a feeder grate, a drying grate, a firing grate, and a finishing grate. Underfire air is provided to the drying, combustion and finishing grates through plenums located under each grate section. Each plenum is equipped with dampers and venturi sections to modulate and measure flow to the particular plenum. Normally, the total underfire air flow will provide 125 to 145 percent of the theoretical air requirements with the majority of the underfire air proportioned through the combustion grate. They hope to achieve a uniform (spatial and temporal) release of volatile matter from the burning grate.

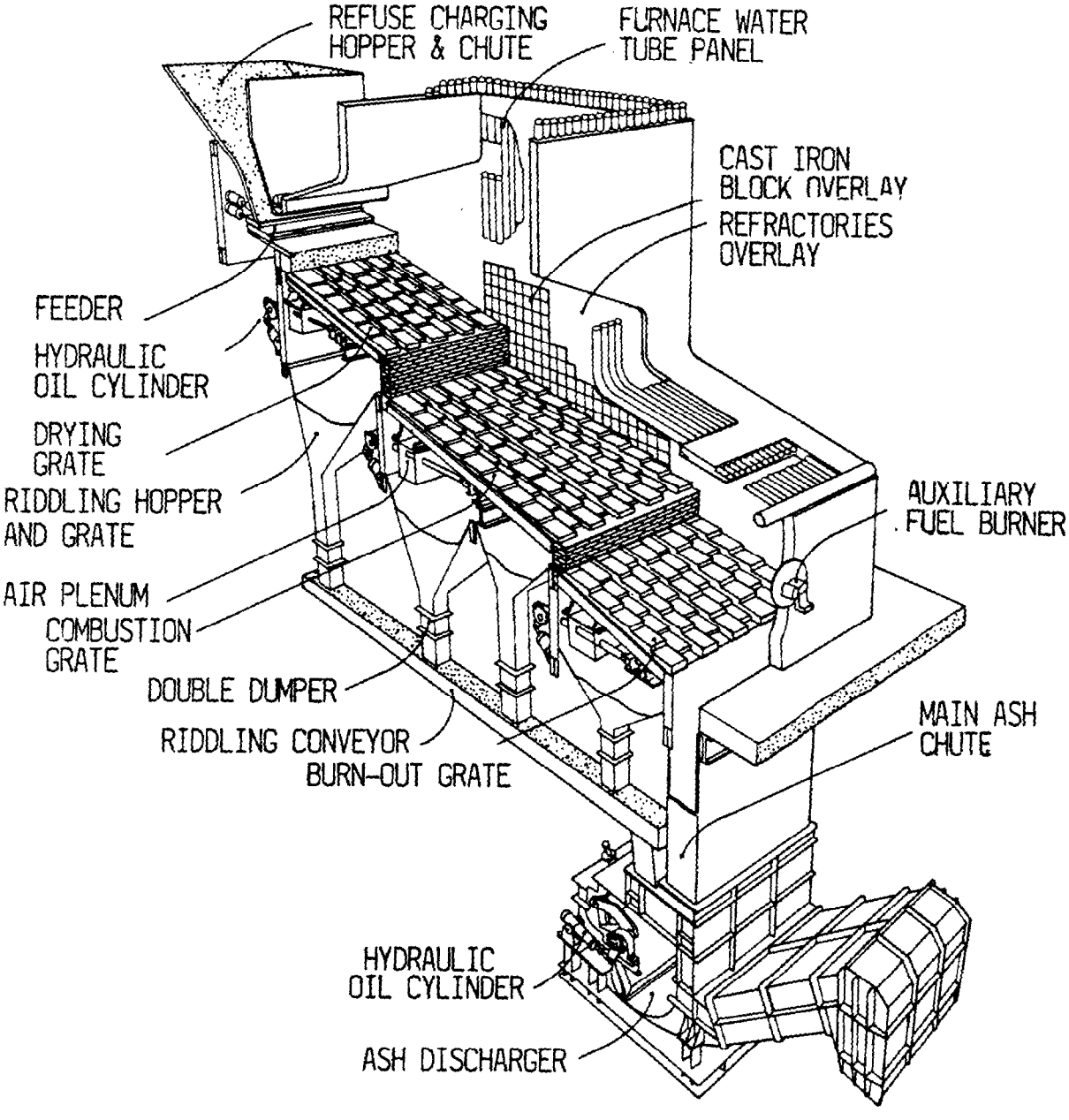

Figure 5-14. Cross sectional schematic of combustion zone on a Riley-Takuma mass burn plant.

TABLE 5-7. DESIGN AND OPERATING FEATURES OF RILEY-TAKUMA TECHNOLOGY

- 4 GRATE SYSTEM
  - FEEDER GRATE
  - DRYING GRATE
  - COMBUSTION GRATE
  - BURNOUT GRATE

  } UNDERFIRE AIR PROPORTIONED AND MONITORED BY ACC
- 80 - 90 PERCENT EXCESS AIR AT MCR
  - 70 - 80% OF TOTAL AIR THROUGH GRATE
- REFRACTORY CLADDING 30' ABOVE GRATE
- ACC SENSES EXHAUST O_2 AND FEED
  - TRIMS O_2 WITH OFA FLOW
  - MAINTAINS T > 1800^{0}F WITH AUXILIARY BURNER
- THREE LEVELS OF OFA PORTS
- CO < 200 PPM
- WILL OPERATE AT 55% WASTE FEED RATE ON 3800 BTU/# WASTE
  - SYSTEM DESIGNED AT 100% - 4,500

The Riley/Takuma design provides a center flow furnace configuration by placing an arch over both the drying and finishing grates. The boiler is a straight wall configuration above the combustion grate. Silicon carbide refractory cladding is provided to a height approximately 30 feet above the grate. Overfire air ports are provided at three locations and are designed to achieve complete coverage of flow from the lower furnace. Overfire air quantities usually amount to approximately 20 to 30 percent of the total combustion air. Overall, the system is designed to operate at 80 to 90 percent excess air.

As stated above, Riley/Takuma attempts to achieve PCDD/PCDF emission control by maintaining at least one-second residence time above 1800°F. This is accomplished through use of a sophisticated automatic combustion control system in conjunction with auxiliary burners. Measurements are made of exhaust oxygen concentration and the furnace exit gas temperature (i.e. temperature at convective section inlet). The ACC will modulate the overfire air flow to maintain constant O_2 concentration. This is primarily a trimming operation on the overfire air. Correlations of required furnace exit gas temperature to assure one-second residence time above 1800°F (as a function of load) will be developed and incorporated in the microprocessor of the ACC. That minimum condition will be maintained by modulation of the fuel-charging rate, grate speed and underfire air flow rate, as well as through the use of an auxiliary burner.

The auxiliary burner is located in the lower furnace region near the grate in order to maintain the time-at-temperature requirement. This required positioning has generated operational problems associated with burner openings getting covered with slag. Riley is currently working on an advanced auxiliary burner design to circumvent that problem.

A potentially important aspect of MSW units designed by Riley/Takuma is the provision for operation at lower than full load. Riley personnel indicated that their systems could be operated at loads as low as 55 percent of rated input (TPD) burning waste with 3800 Btu/lb heating value. It should

be recalled, however, that the ACC will still maintain the time at temperature criteria through use of the auxiliary burner.

Further inquiry into operational control at reduced load conditions indicated that the overall excess air level was allowed to increase. Exhaust O_2 concentration versus load curves were not provided. There is obviously concern over maintenance of overfire air jet penetration and mixing at reduced load. Riley personnel noted that there were three levels of overfire air ports and that levels could be shut down at reduced load. That procedure should maintain jet penetration. However, shutting down a row of overfire air jets is accomplished manually and is not automatically controlled through the ACC.

It should be noted that the MSW facility being constructed at Olmstead County, Minnesota will be the first Riley/Takuma system in operation in the United States. Even though there is significant operating experience on Takuma grates in Japan, it is reasonable to expect that Riley will fine-tune its design and control strategy through experience gained at Olmsted.

5.9 Detroit Stoker

Turner (1982) reported that in 1982 there were nine mass-burn, waterwall refuse combustion plants in operation in the United States and that four of the plants employed Detroit Stoker grates. The combination of Detroit Stoker grates with various boiler manufacturers (Foster Wheeler, Babcock and Wilcox, and Keeler) reflects the historic contracting procedure in the United States. That procedure generally involves selection of an engineering firm to design the plant with major component selection based on competitive bids.

The preceding sections of this chapter have discussed design and operating philosophy of various firms marketing complete resource recovery systems. Detroit Stoker is not a MSW system supplier. Typically, they supply fuel feed, grates and air supply hardware (underfire and overfire) to the boiler manufacturer. Detroit Stoker then works with the boiler designer and control system contractor (this could be a third party in the American

contractual approach) to integrate the various components into an overall system.

Significant testing has been undertaken of the Hampton plant in Virginia over the last several years. The PCDD/PCDF emissions from this plant which employs a Detroit Stoker grate are significantly higher than other mass burn waterwall systems (see Table 4-1 and the data base volume entitled "Emission Data Base for Municipal Waste Combustors." The reasons for these higher emissions are discussed in some detail in Chapter 8 of this report. Current Detroit Stoker hardware design is significantly different from that used at Hampton (Detroit Stoker, 1986). Figure 5-15 and Table 5-8 illustrates the current design. Major changes have occurred in the distribution of underfire air, addition of flow constrictions and modifications to the overfire air system design. Each of these areas are discussed below.

The underfire air system now consists of separate plenums under each grate section. The grates themselves are constructed as standard width modules. Thus, depending upon the unit size the grate may consist of a 3 x 1 or 3 x 2 module configuration with either 3 or 6 underfire air plenums. Air flow to each is individually adjustable. Air pressure in the underfire plenums is typically on the order of 3 to 3-1/2 inches water gauge which is low by European design standards. Detroit Stoker is convinced, however, that this pressure level is sufficient to achieve uniform air distribution across the drying, firing and finishing grates. Establishment of the underfire air flow distribution is based on visual observation of the flame. Normally, 70 to 75 percent of the underfire air is directed through the firing grate.

As the combustion gases leave the grate region they are directed through a constricted flow region formed by "noses" on both the front and rear boiler walls. Clearly, construction of the throat region is the responsibility of the boiler manufacturer. This is a critical area requiring close coordination between the boiler and grate manufacturer. Overfire air ports are located on both the front and rear walls. The number, location and angle of the overfire air ports are adjusted for each unit design following design

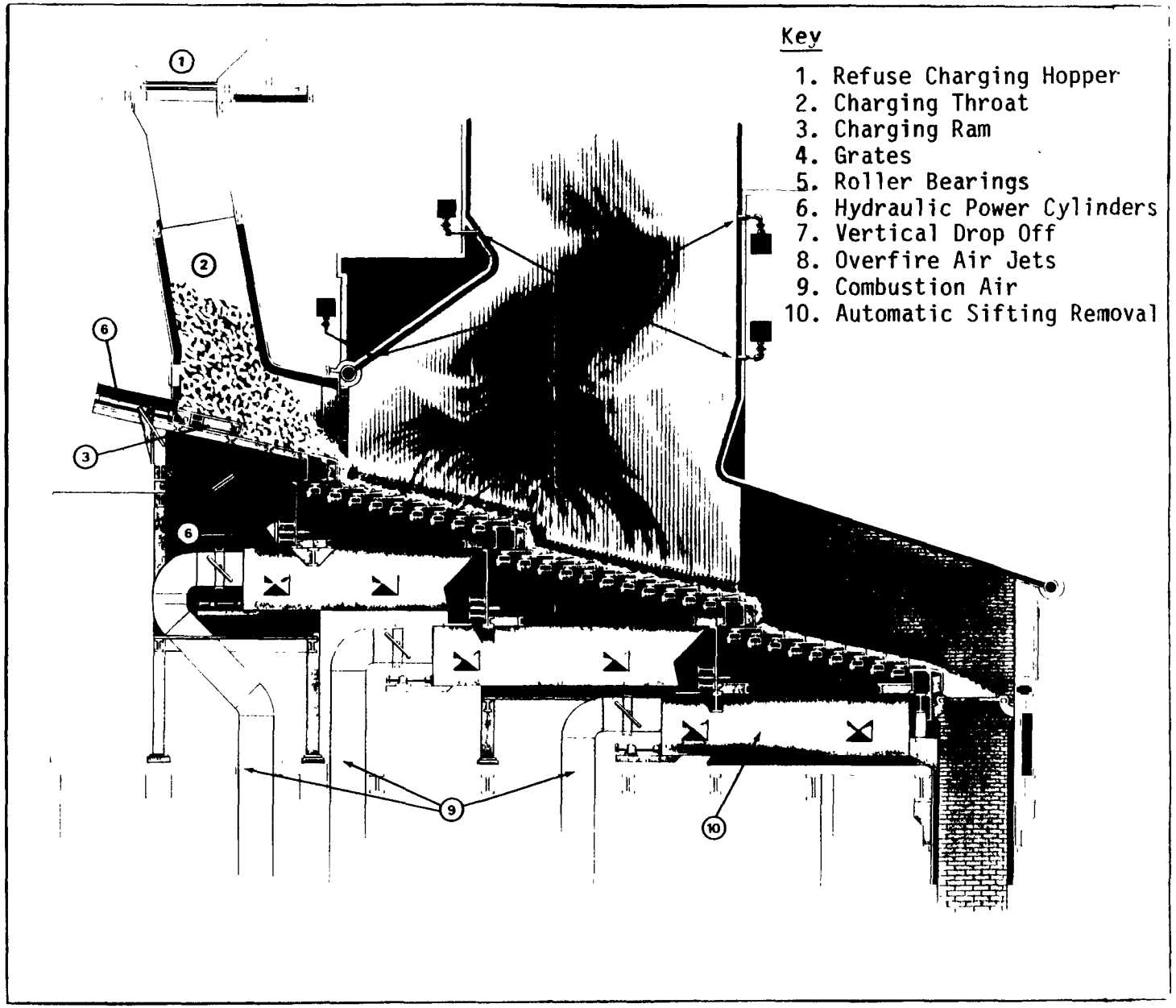

Figure 5-15. Cross-section of boiler with current design Detroit Stoker firing system.

TABLE 5-8. DESIGN FEATURES OF DETROIT STOKER MASS BURN COMBUSTORS

- FUEL FEED, GRATE AND OFA BY DSC
- BOILER NOT BY DETROIT STOKER
- MULTIPLE GRATE AIR PLENUMS WITH INDIVIDUAL CONTROLS (9)
- PUSHER TYPE GRATE DESIGN
- FLOW RESTRICTIONS TO LIMIT COLD REGION BY-PASS
- MULTIPLE ROWS OF OFA PORTS
  - 40-50% TOTAL AIR
  - DESIGN CONTROLS FLAME HEIGHT
- REFRACTORY CLADDING (SIC) 15-20 FEET ABOVE GRATE
- DESIGNED TO PROVIDE 2:1 TURNDOWN

criteria for controlling flame height. Typically 30 to 40 percent of the total combustion air is supplied as overfire air.

The lower furnace region - to an elevation above the overfire air ports - is covered with approximately 1 inch of silicon carbide refractory to prevent tube corrosion. Detroit Stoker feels that the combination of insulated walls, flow constriction and careful design of the overfire air jets will lead to high combustion efficiency. As in the case with essentially all manufacturers, "good combustion" is equated with low PCDD/PCDF emission. They do not, however, have emission data to establish the validity of that belief. Detroit Stoker recommends that the boiler manufacturer provide at least one second residence time above 1800°F.

Startup and shutdown rely on auxiliary burners. These burners are either gas or oil-fired and are located well above the grate. Exact location, size, fuel, and control sequence for the auxiliary burners is the responsibility of the boiler manufacturer.

Detroit Stoker grates are designed to operate with a 2:1 turndown ratio but Detroit Stoker prefers to have base-loaded systems. The lower limit for turndown is generally established by furnace temperature. This condition will also be characterized by deterioration in overfire air mixing as well as increased CO and unburned hydrocarbon emissions. Detroit Stoker suggested that a row of overfire air ports could be dropped from service at low load but that is not an integral part of their suggested control strategy.

The Detroit Stoker design for overfire air mixing strategy has evolved through experience gained in numerous MSW projects. They are currently considering cold-flow modeling studies to refine their current designs.

5.10 Combustion Engineering - De Bartolomeis

Over 40 percent of the world's thermal electric power is produced by equipment of Combustion Engineering (C-E) design. They offer complete system designs and hardware for resource recovery applications and will supply

either mass burning or RDF configurations. Further discussion of C-E's RDF system offering will be presented in Chapter 6. Combustion Engineering has recently been selected as the system supplier for a 600 ton/day MSW facility to be built in Chattanooga, Tennessee. This will be the first C-E designed mass burn facility in the United States.

The grate system for C-E MSW systems is obtained through an exclusive North American license with the Italian firm, De Bartolomeis (db). Figure 5-16 illustrates the db grate design which consists of alternate moving and stationary steps in an overlapping configuration (Combustion Engineering, 1986). The three-part step design includes a scraper which serves the dual function of cleaning the lower surface plate and forms the minimum free area passage for underfire air.

Each grate section is equipped with its own plenum to allow control of underfire air. It should be noted that various grate sections are shown to be configured in a continuous path, without steps between grate sections. The C-E personnel indicated that the grate motion provided sufficient aeration of the fuel and felt that steps between grate sections could result in uneven burning. Unlike most other grate designs, the slope of db grates can vary from horizontal to as much as 21 degrees. C-E sales literature indicates the slope of the grate is based on waste composition. For the typical ranges of heating values found in the United States, the slope is 8°. Very low heating values (<4000 Btu/lb avg. HHV) would require steeper slopes.

Figure 5-17 illustrates the db grate integrated into a complete resource recovery system. For MSW, C-E uses a boiler based on a design developed by Energie und Verfahrenstechnik GmbH (EVT). EVT is partially owned by Combustion Engineering. Detailed information on overfire air mixing considerations, splits between underfire and overfire air, combustion control strategy, startup procedures, etc. were not made available.

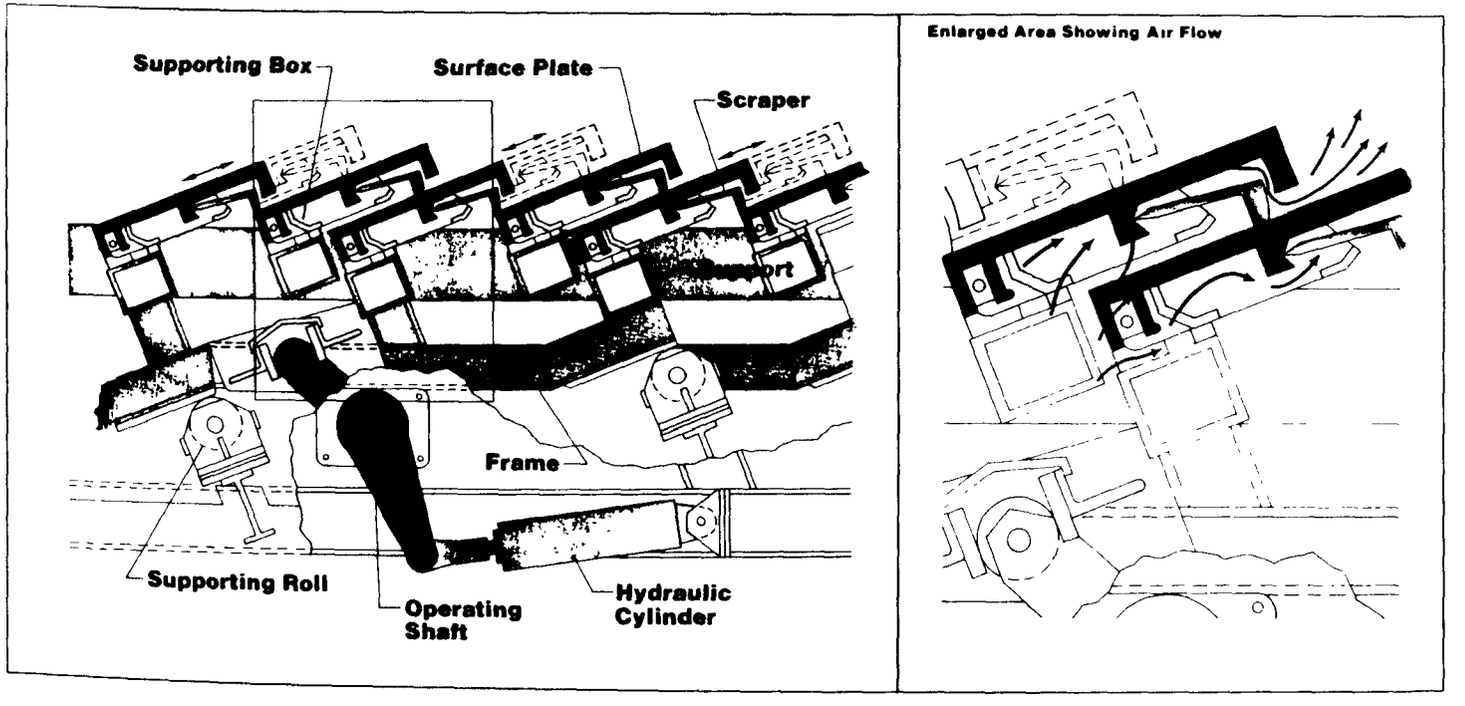

Figure 5-16. Design features of DeBartolomeis grate.

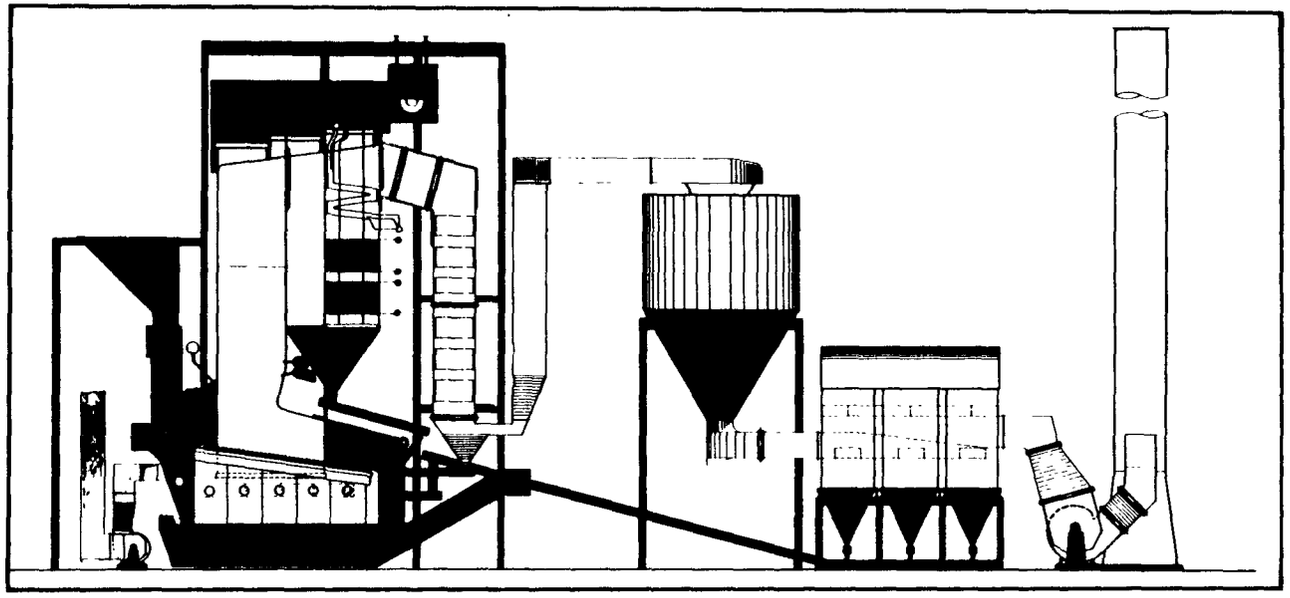

Figure 5-17. Boiler cross-section of CE design using db grate and EVT boiler.

5.11 Westinghouse/O'Connor

Westinghouse Corporation is a relatively recent entrant in the list of companies competing in the combustion portion of the resource recovery industry. That entry was accomplished through a 100 percent purchase of the O'Connor Combustor Corporation (Westinghouse, 1986). Prior to the Westinghouse buyout, O'Connor had built a MSW facility in Sumner County (Gallatin), Tennessee as well as facilities at five locations in Japan. Current projects being designed or under construction include facilities in York County, Pennsylvania; Bay County, Florida; Dutchess County, New York; and in Bloomington, Indiana.

The O'Connor combustion system represents a unique approach for burning municipal solid waste. A typical plant configuration is illustrated in Figure 5-18 and shows that the heart of the system is a water-cooled rotary combustor. The rotary cylinder consists of alternating watertubes and perforated steel plates. MSW is metered into the combustor via a feed chute and ram feeder. Preheated combustion air is divided into six zones and enters the combustor through the perforated plates forming the walls of the cylinder. The rotary combustor turns slowly (10-20 RPH) and is oriented with a slight (approximately 6°) downward tilt. The rotary section terminates within a waterwalled boiler allowing the residue to fall into an ash removal system.

Combustion air is drawn from the waste pit and passes through an air preheater at the boiler exhaust. Typical air preheat temperature is $450^{o}F$. In the Gallatin facility a portion of this air was drawn off by a second fan and directed to three overfire air port elevations in the boiler - one below the rotary combustor dump and two elevations above the rotary combustor. As shown in Figure 5-19, the main combustion air is distributed axially down the rotary combustor. Each axial section is subdivided into two zones. With counterclockwise rotation, air passing through the right zone is forced through the burning material bed. Air admitted to the left zone will enter the rotary combustor in a region which is effectively above the burning bed.

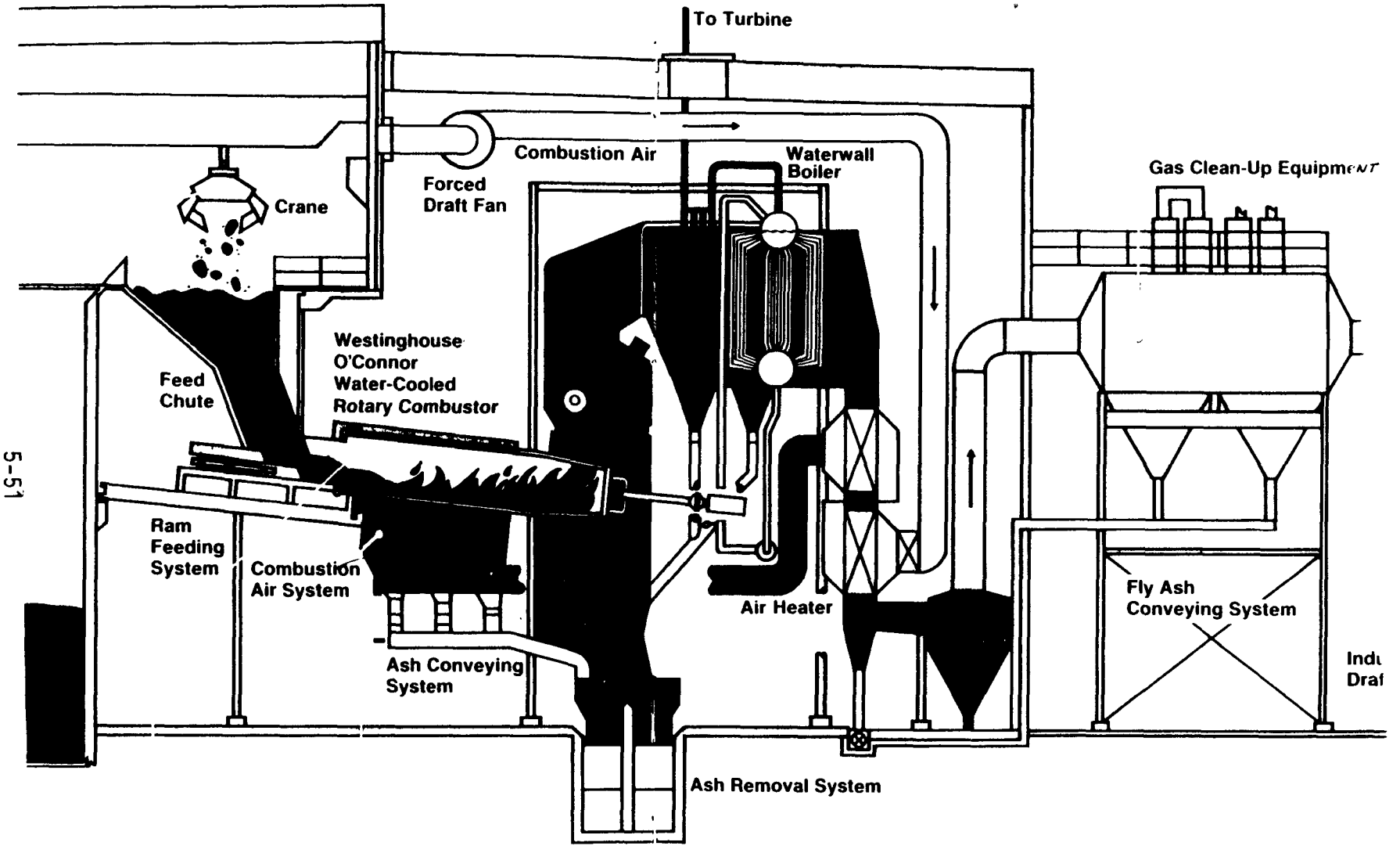

Figure 5-18. Typical plant configuration using Westinghouse/O'Connor combustor.

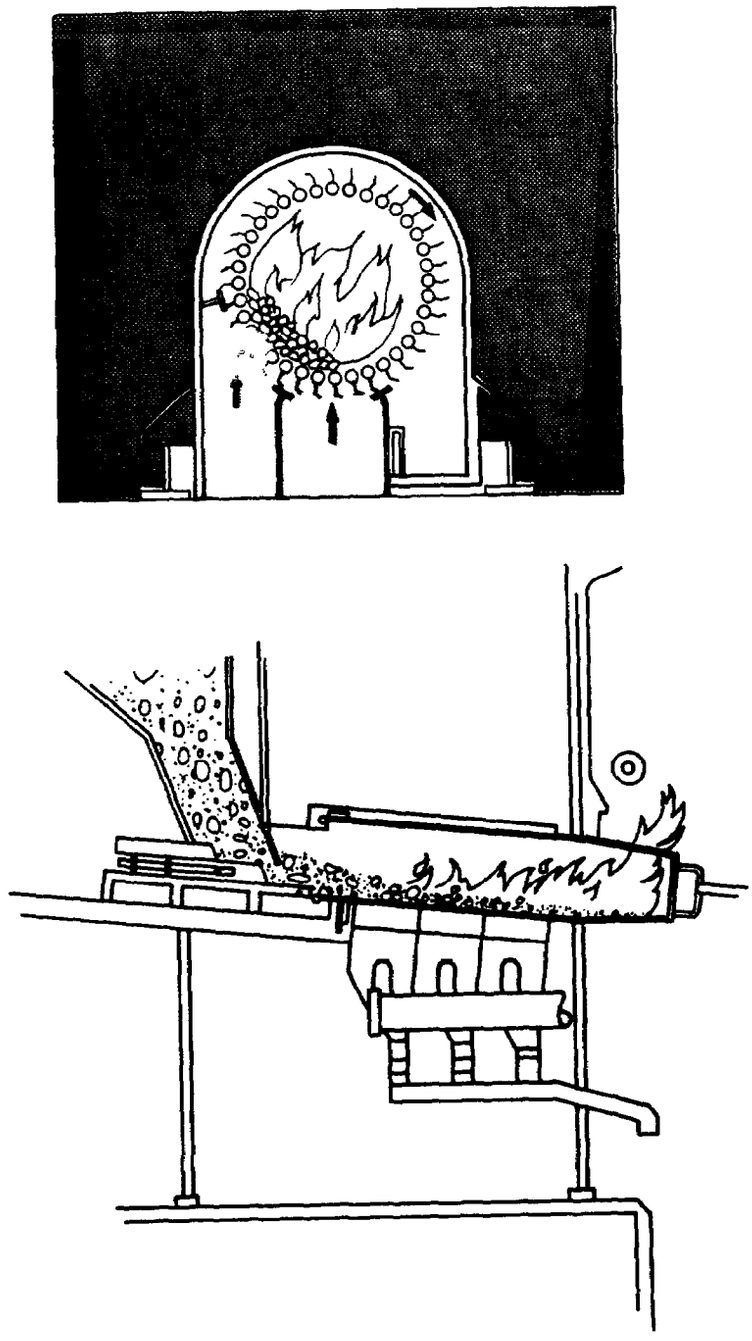

Figure 5-19. Cross-section of Westinghouse/O'Connor combustor.

Westinghouse personnel refer to those two zones as underfire and overfire air respectively.

In comparison to the grate firing systems discussed in earlier sections of this chapter, there are several other unique features of the O'Connor combustor. Typical grate firing systems operate at 80 to 100 percent excess air while the Westinghouse/O'Connor system operates at approximately 50 percent excess air (both at 100 percent load operation). Traditional grate systems for MSW firing provide silicon carbide cladding to the lower waterwalls to prevent corrosion. There is no refractory on the waterwalls of the O'Connor rotary combustor.

As noted previously, the Gallatin, Tennessee facility was equipped with "overfire air" ports at three elevations in the boiler. In that facility, the region from the rotary combustor to the ash pit of the boiler was equipped with a stationary grate referred to as an "afterburning grate." This particular facility has been subjected to extensive field testing by Cooper Engineers, Inc. as part of a study sponsored by the California Waste Management Board. A 1984 report (Cooper Engineers, 1984) states that "it was found from earlier Cooper Engineers testing that the boiler overfire air and grate air was ineffective, so these systems were no longer used and all of the combustion air is now introduced through the combustor as underfire and overfire air." This has been confirmed in discussions with Westinghouse personnel. The test report by Cooper Engineers includes data on criteria pollutants and heavy metals, but does not include information on PCDD/PCDFs/ furans and other air pollutants. It is not known whether the boiler overfire air system had an impact on those pollutant emissions.

All of the existing facilities using the O'Connor combustor system were constructed prior to the Westinghouse purchase of O'Connor. For a variety of technical and marketing reasons, Westinghouse has entered into a long-term contractual arrangement with Sumner County. They have made a variety of major system repairs including replacement of the stacks which collapsed due to corrosion. It is also reported that the facility has a new superintendent who is a Westinghouse employee. The significance of this arrangement is that

Westinghouse intends to use the Gallatin facility as both a show place facility and as a test bed for evaluating issues such as PCDD and PCDF emissions.

5.12 Basic Environmental Engineering Inc.

Basic Environmental Engineering located in Glen Ellyn, Illinois builds multistaged mass burn combustors for smaller scale applications (Basic Environmental Engineering, 1986). Basic offers systems with sizes ranging from 4 MMBtu/hr to 56 MMBtu/hr (10 to 150 T/d). The construction of these units is done in a "unitized" modular fashion as opposed to field erected which is common for larger mass burn systems. The primary zone of the Basic system is not starved air so that the technology can be classified as small modular mass burn combustion. There is currently little information available on trace organic emissions from Basic Environmental Engineering Systems and hence it is uncertain whether current design practices are sufficient; however, the design and operating approach employed by Basic is worthy of consideration because Basic is one of the leaders in advanced small unit systems. Also many of the features of the Basic technology will likely have favorable impact on trace organic emissions. The process flow diagram of a typical Basic system is provided in Figure 5-20 and design features are summarized in Table 5-9. The combustion system consists of three zones as follows:

- Pulsed hearth primary operated at near stoichiometric conditions
- Fired afterburner secondary with secondary air addition
- Final air addition in tertiary

The primary zone includes a ram feeder to transfer the solid waste onto the first of two pulse hearths. (Basic uses one, two or three pulse hearths depending on model size.) Primary combustion air is introduced through the hearth at approximately stoichiometric conditions. The primary chamber is constructed of membrane water wall. The firing density in the primary is designed to 12,000 Btu/hr/ft^3 and Basic personnel believe that this is a key parameter that should not be exceeded. Higher volumetric charging rates are

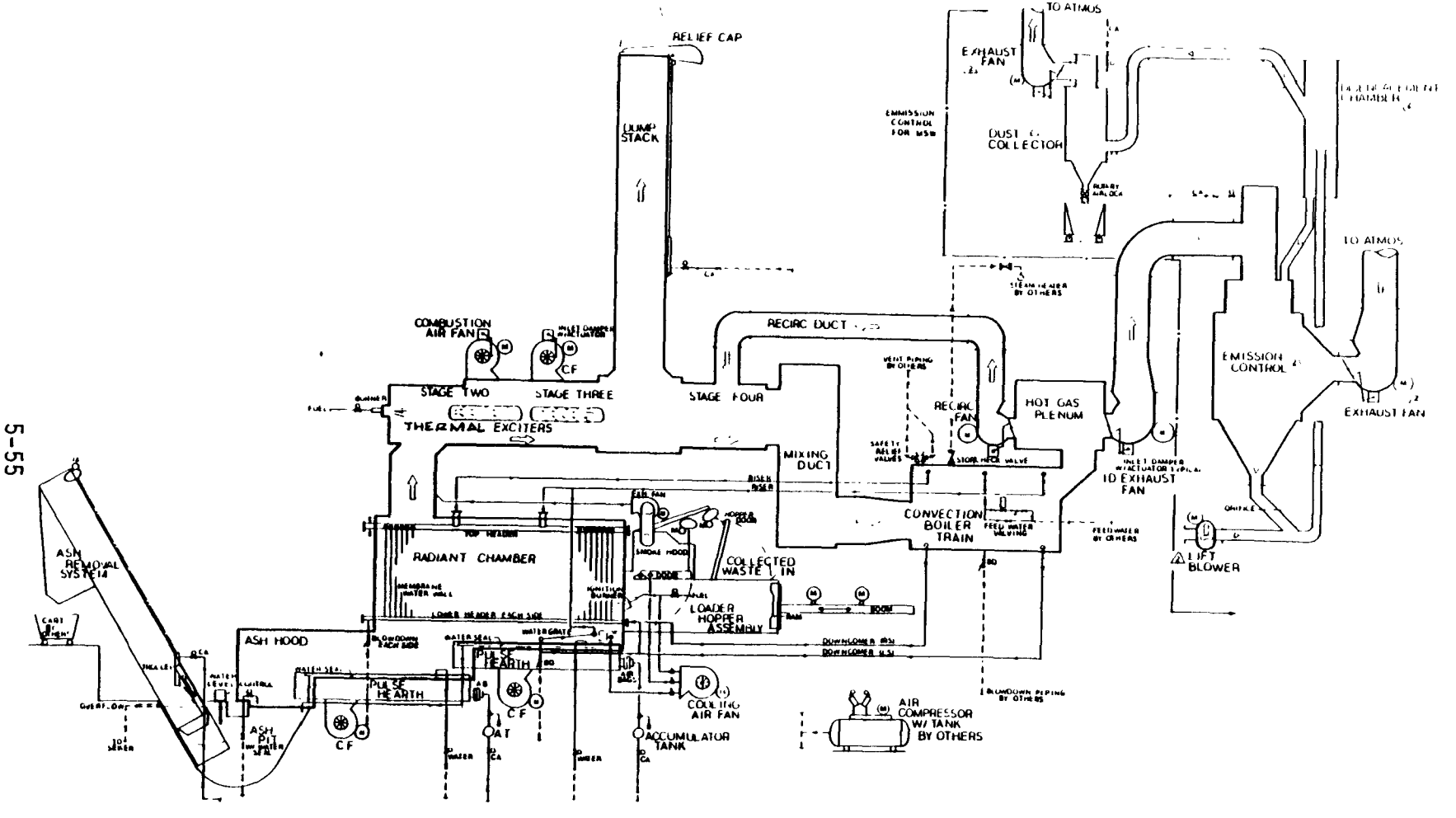

Figure 5-20. Process flow diagram of Basic Environmental Engineering modular mass burn technology.

TABLE 5-9. DESIGN FEATURES OF BASIC ENVIRONMENTAL ENGINEERING SMALL MODULAR MASS BURN TECHNOLOGIES

- THREE STAGE COMBUSTION
  - PULSED HEARTH PRIMARY
  - FIRED AFTERBURNER SECONDARY
  - "THERMAL EXCITER" TERTIARY
- PRIMARY
  - MEMBRANE WATER WALL
  - PULSED HEARTH
  - STOICHIOMETRIC AIR
- SECONDARY
  - FIRED AFTERBURNER - TEMPERATURE CONTROL
  - AIR INTRODUCTION WITH "THERMAL EXCITER" CYCLONIC OUTWARD INJECTION
  - REFRACTORY LINED
- TERTIARY
  - FINAL AIR ADDITION WITH EXCITER
  - REFRACTORY LINED
- EXCESS AIR
  - TYPICALLY 80%
- MONITORING & CONTROL
  - TEMPERATURES OF EACH ZONE
  - STEAM PRODUCTION
  - CO (20-30 PPM)
- TIME AT TEMPERATURE
  - IN REBURN ZONES 1 SEC ABOVE 1800^{0}F
- NO_x ~ 35 PPM

expected to lead to poor burnout and excessive carbon and volatile carryover to the secondary chamber. Higher charge rates also lift larger particle sizes which require greater residence time to destroy the carbonaceous particles before leaving the high temperature furnace zone.

The secondary or "stage two" chamber includes a fired afterburner and additional air injection. The first afterburner is positioned at the exit of the transition duct between the chambers and can be fueled on oil or natural gas. The design capacity of the afterburner is 20 percent of the total Btu input of the system for normal municipal solid waste and is increased to 40 or even 50 percent when the refu ncludes: a) large amounts of chlorinated plastics or b) when the furnace is operated at lower furnace input firing rates, but the waste fuel is primarily long chain hydrocarbons such as plastics and rubber. The afterburner is fired before startup for heating the system (to 1400°F) and is cycled on and off to maintain temperature. For refuse with higher moisture content (less than 3800 Btu/lb) the afterburner is continually fired but varied and adjusted automatically to setpoint temperatures. Additional air is added into the second stage after the afterburner using a unique injection scheme called a "thermal exciter". The air is injected outward from a refractory-lined closed cylinder positioned along the center axis of the secondary chamber. The air flows through small, high-velocity jets and are oriented to achieve vortex flow in the secondary chamber.

The tertiary chamber consists of a second "thermal exciter" for final air addition to an overall excess air level of approximately 80 percent. The chamber exit temperature is monitored and is used as the control variable for the fired afterburner. The temperature is maintained at between 1600 and 1800°F depending on refuse characteristics. The maintenance of the exit temperature of the final combustion chamber ensures that the gases experience at least one second above that temperature in the combined second and third chambers. In other words, typical design conditions would also ensure greater than 1 second above 1800°F under excess air conditions.

The Basic combustion monitoring and control system is relatively straightforward. Temperatures of each chamber exit are used as the principal control variables and the air flows and afterburners are used to maintain the temperature. Basic is currently investigating the use of oxygen and carbon monoxide monitoring for system control. The Basic technology is capable of achieving high turndowns (up to 4:1) without requiring additional auxiliary fuel to maintain the destruction temperatures of the reburn zones that it required at full design conditions. Example: if at full load the waste fuel burned did not require auxiliary fuel, then down to 4:1 it would not need it. Basic engineers would not advise lower load operation without auxiliary fuel being required. If a client desires to operate to 3:1 turndown, the design supplied to the client will be changed from the standard control of 60 percent turndown without use of auxiliary fuel to maintain temperature.

The distributed air addition and moderated uniform temperatures likely keeps NO_x emissions from being excessive. Basic estimates NO_x levels of less than 45 ppm compared to other modular systems in the 170 ppm range. The exhaust carbon monoxide level is also low, typically in the range of 20-30 ppm. Although CO is not typically measured unless requested by the client, Basic believes that this is an indicator of the maintenance of good combustion conditions. Most currently installed Basic systems do not have air pollution control devices; however if the waste stream has greater than 2 percent by weight heavy metals or 1/2 percent of plastics with halogens or halogen salts, then baghouses, electrostatic precipitators and/or scrubbers are recommended.

5.13 Enercon/Vicon

Enercon Systems, Inc. is a small corporation specializing in the engineering, design and construction of industrial energy systems. They have developed and patented a multistage controlled excess air mass burning technology. Vicon Recovery Systems, Inc. specializes in the design, construction and operation of MSW facilities. Vicon is the exclusive licensee of the Enercon technology for MSW. The Enercon/Vicon technology is used at the MSW facility in Pittsfield, MA which is the site of a continuing

extensive emission performance evaluation (evaluation developed under the auspices of ASME with project sponsorship from numerous state government agencies, DOE, Ontario Ministries of Energy and Environment, the Vinyl Institute, and the Association of Plastics Manufacturers in Europe).

The Enercon/Vicon technology utilizes modular construction but extends the "modular" concept to significantly larger scale than the John Basic Technology discussed in the previous section. The Pittsfield, MA facility, for example, consists of three municipal waste combustors (or modules), each rated at 120 tons/day; two furnaces are typically on line, with one standby. The Enercon/Vicon system technology relies on refractory lined chambers without heat extraction. Burning occurs in the primary chamber which is equipped with a recuperative combustion air liner to minimize heat loss from the zone. Combustion gases exist the primary chamber through a passage referred to as the "mixing throat" and enter the refractory lined secondary combustion chamber. This chamber simply provides high temperature residence time to maximize trace organic burnout and oxidation of CO to CO_2.

The incinerator module referred to as the tertiary chamber is actually an insulated transfer duct carrying hot combustion gases from one or more secondary chamber(s) to one or more waste heat boilers. At the Pittsfield facility, there are three incinerator modules feeding into a common tertiary chamber. The combustion products are fed to two waste heat boilers designed to operate with 1400°F boiler inlet temperature.

Typically, a front end loader is used to fill the charging hopper of the incinerator. When filled, the hopper door is closed, the fire door opened and a hydraulic ram actuated to shove the MSW into the primary chamber. A fresh MSW charge is added at approximately ten minute intervals. The design volumetric heat release rate in the primary zone is 10,000 Btu/hr per cubic feet. Water cooled, hydraulic rams are used to move the MSW along the stepped series of refractory hearths. Stoking rams are actuated on approximately a five minute cycle.

Oxidizer is added to the primary chamber in three ways. Undergrate gas can be a mixture of recirculated flue gas (underfire FGR) and fresh air drawn from the tipping room. Visalli et al. (1986) report that in the Pittsfield facility, undergrate oxidizer is 100 percent FGR. As noted previously, the primary chamber is equipped with a recuperative air passage. This preheated air is injected at the head end of the primary chamber above the burning bed of MSW. The third source of oxidizer to the primary zone is recirculated flue gas, added through high velocity, overfire jets. The flow rate of each oxidizer gas source (and distribution) is controllable.

Oxygen and gas temperature monitors are located within the secondary chamber and provide feedback to control primary zone operation. The temperature sensor provides a control signal to modulate the quantity of overfire FGR while the O_2 monitor is used to modulate the quantity of primary combustion air. Typically, the temperature in the secondary chamber is controlled to 1800°F while the excess air is cut to approximately 50 percent. FGR modulation controls gas temperature by controlling the amount of dilution but has minimal impact on O_2 level. Auxiliary burners are provided to assist in maintaining temperature for particularly wet MSW. Oxygen concentration is impacted by modulation of the preheated combustion air since that oxidizer stream contains 21 percent O_2 (versus 4 to 8 percent for the FGR streams). It should be noted that the excess air level maintained by Enercon/Vicon is significantly less than that provided in typical mass burn, waterwall systems.

Additional recirculated flue gas is added to the tertiary chamber to control the boiler inert temperature. This final dillution occurs after the combustion products have remained in the secondary chamber for at least one second of a temperature of 1800°F.

As noted previously, the Pittsfield, MA facility is undergoing extensive performance evaluation testing. Only limited data is publicly available. However, based on the reportable information, this technology is capable of operation at very low CO and NO_x levels. Over the operating temperature range (secondary zone) of approximately 1600 - 1800°F, CO emissions were

found to be less than 30 ppm. Even though the Enercon/Vicon system does not remove heat from either the primary, secondary or tertiary chambers, the system operates at relatively low temperature (due to extensive use of FGR) and thus the NO_x emission levels were typically in the 100 ppm range.

In addition to the Pittsfield facility, Enercon/Vicon is providing several new MSW facilities. A 600 tpd facility (5 units at 120 tpd each) is in advanced shakedown at Pigeon Point, Delaware. This facility will burn a 50/50 mixture of RDF and MSW (not necessarily combined). A 240 tpd (2 @ 120 tpd) facility is an advanced construction stage at Rutland, Vermont while a 360 tpd (3 @ 120 tpd) facility is under construction at Springfield, Mass. Finally, a 420 tpd (3 @ 140 tpd) facility is being built at Wallingford, Ct. With the exception of the Wallingford facility, each of the Enercon/Vicon systems use 120 tpd modules. Each of these 120 tpd units consists of six hearths rated at 20 tpd each. To increase the rating to 140 tpd, a seventh hearth has been added to the Wallingford facility.

5.14 References

Basic Environmental Engineering, 1986. Discussion and data supplied to W. R. Seeker in telephone conversation with A. J. Matlin on October 16, 1986.

Combustion Engineering, 1986. Discussion and data supplied to W. R. Seeker and W. S. Lanier by Combustion Engineering in Windsor, CT on September 8, 1986.

Cooper Engineers, 1984. Air Emissions Tests of Solid Waste Combustion in a Rotary Combustor/Boiler System AT Gallaton, Tenn. Report to West County Agency of Contra Costa County Waste Co. Disposal - Energy Recovery Project.

DBA, 1986. Discussion and data supplied by DBA to W. R. Seeker and W. R. Niessen by Deutsche Babcock in Keyersfeld, Germany on August 1, 1986.

Detroit Stoker, 1986. Discussion and data supplied to W. R. Seeker and W. S. Lanier by D. Reschly and T. Gaerer in Monroe, MI on September 9, 1986.

Martin, 1986. Discussions and data supplied by Martin personnel (D. Kreuch, J. Horn, H. Weiand, G. Schetter, J. Martin, D. Sussman) to W. R. Seeker and W. R. Niessen in Munich, August 6, 1986.

Martin & Schetter, 1986. "Reduction of Pollutant Emissions from Refuse Incinerators by Means of Optimized Combustion Conditions." 8th Members' Conference of the IFRF, Noordwijkerhaut, The Netherlands, May 28-30, 1986.

Riley, 1986. Discussion and data supplied to W. S. Lanier in telephone conversation with Riley personnel on August 17, 1986.

Steinmueller, 1986. Discussion and data supplied by Steinmueller personnel (H. Pollack, P. Daimer, O. Kaiser) to W. R. Seeker and W. R. Niessen in Duesseldorf, August 1, 1986. Also report "Feurung stechnische Moglictikeiten zur Schadstoffreduzierung bei Mullverbrennungsunlagen", K. Leikert and H. Pollack.

Turner, 1982. "Mass Burning in Large-Scale Combustors" Thermal Conversion Systems for Municipal Solid Waste, Noyes Publications, Park Ridge, NJ.

Visalli, Joseph R. et al., "Pittsfield Incinerator Research Project; Status and Summary of Phase 1 Report; Plant Characterization and Performance Testing," Paper presented at 12th Biennial National Waste Processing Conference, ASME, Denver, Colorado, June 1-4, 1986.

Vogg and Steiglitz. Presented at the 5th International Symposium on Chlorinated Dioxins and Related Compounds. September 16-19, 1985. Bayreuth, West Germany.

Volund, 1986. Discussion and data supplied by Volund personnel to W. R. Niessen, July 30, 1986. See also "Emission Test at a Danish Energy from Waste Plant." M. Rasmussen, Volund Report No. 32V1-8, October 1985

Von Roll, 1986. Discussion and data supplied by Von Roll personnel (W. Staub and A. Scharsach) to W. R. Seeker and W. R. Niessen in Zurich, August 4, 1986. Also Von Roll Report on the testing at Neustadt/ Ostohstein, 1984.

W+E Umwelttechnik AG, 1986. Discussions and data supplied by M. Sudobsky and M. Zweifer of WE Umwelttechnik, AG to W. R. Seeker and W. R. Niessen in Zurich, August 5, 1986.

Westinghouse, 1986. Discussions and data supplied to W. R. Seeker and W. S. Lanier by Suh Lee, D. Bechler and S. Winston in Pittsburgh, PA, September 10, 1986.

6.0 CURRENT PRACTICES IN RDF COMBUSTION

The chemical and physical characteristics of a fuel are important parameters in the design of any combustion system. The previous chapter described firing systems used for burning raw municipal solid waste in water wall boilers. Due to the wide variability in MSW characteristics, those combustion systems are significantly different from systems designed to burn traditional solid fuels such as coal, wood, hogged fuel, etc. An individual charge of MSW may physically vary from small scraps of paper to discarded refrigerators. The volatility of an MSW charge may have contributions from discarded propane tanks and bottles of solvents as well as contributions from rain-soaked yard waste and discarded firewall insulation. The ash constituents will include easily melted items such as aluminum cans as well as a liberal amount of sand and glass. The melted aluminum tends to solidify on grate openings sealing air passages, while sand and glass tend to erode the grate. Mass-fired MSW systems are specifically designed to accommodate those variations. An alternate design approach is to process the MSW to produce a less difficult fuel. The degree of processing can vary from simple removal of bulky items and shredding to extensive processing to produce a fuel suitable for co-firing in pulverized coal-fired boilers. Preprocessed MSW, regardless of the degree of processing is broadly referred to as refuse derived fuel or RDF.

6.1 Types of RDF

The American Society for Testing and Materials (ASTM), through its Committee E-38.01 on Resource Recovery Energy has established classifications defining different types of RDF. The various classifications and resultant fuel descriptions are listed in Table 6-1 and discussed below.

6.1.1 RDF-1 or MSW

As noted in Table 6-1, removal of bulky items such as discarded water heaters, refrigerators, etc. produces RDF-1. Producing RDF-1 is accomplished by hand removal of the bulky items on the tipping floor or by careful pit

TABLE 6-1. ASTM CLASSIFICATION OF REFUSE DERIVED FUELS

Type of RDF	Description
RDF-1 (MSW)	Municipal solid waste used as a fuel in as-discarded form, without oversize bulky waste (OBW).
RDF-2 (c-RDF)	MSW processed to coarse particle size, with or without ferrous metal separation, such that 95 wt % passes through a 6-in.-square separation, such that 95 wt % passes through a 6-in.-square mesh screen.
RDF-3 (f-RDF)	Shredded fuel derived from MSW and processed for the removal of metal, glass, and other entrained inorganics. The particle size of this material is such that 95% by weight (wt %) passes through a 2-in.-square mesh screen. Also called "fluff RDF."
RDF-4 (p-RDF)	Combustible-waste fraction processed into powdered form, 95 wt % passing through a 10-mesh (0.035-in.-square) screen.
RDF-5 (d-RDF)	Combustible waste fraction densified (compressed) into the form of pellets, slugs, cubettes, briquettes, or some similar form.
RDF-6	Combustible-waste fraction processed into a liquid fuel (no standards developed).
RDF-7	Combustible-waste fraction processed into a gaseous fuel (no standards developed).

management by the crane operator. This type of fuel retains the majority of fuel variability characteristics found in raw municipal waste. Clearly, the combustion system requirements to burn RDF-1 are the same as for raw MSW.

6.1.2 RDF-2 or Coarse RDF (C-RDF)

The second type of refuse derived fuel described in Table 6-1 is referred to as RDF-2, "Coarse RDF," or c-RDF. A primary shredder is used to reduce the "particle" size such that 95 weight percent passes through a 6 inch square mesh screen. Flail mills, hammer mills or rotary cutters may be used for this primary shredding operation. Preparation of coarse RDF may also include removal of ferrous metals. Several types of magnetic devices have been developed for that purpose. Since the extracted metals generally contain loose paper or other materials, an air separation device is often used to clean the ferrous metal.

The decision on including ferrous metal separation in the waste preprocessing is largely an economic issue. Metal removal generates a potentially saleable by-product and also reduces the mass of material processed in the municipal waste combustor. In the Albany, N.Y., Solid-Waste Energy-Recovery System (ANSWERS) waste is processed in one facility and then transported by truck to the boiler facility. In this instance ferrous metal separation also reduces costs associated with fuel transportation. Another important consideration is that ferrous metals can also be separated from the boiler's bottom ash. That is a practice employed in several MSW systems (e.g., the Signal Resco facility at Baltimore, MD). Ferrous metals recovered from the ash will have first passed through the boiler leaving a cleaner product for sale.

The ANSWERS operation described in Figures 6-1 and 6-2 may be used to illustrate two important RDF considerations. First, by preprocessing the waste it may be economical to store and transport the RDF. Though long-term storage and/or long distance transport would generally be restricted to more highly processed forms of RDF, these factors are an important consideration in developing RDF processing technology. The second important consideration

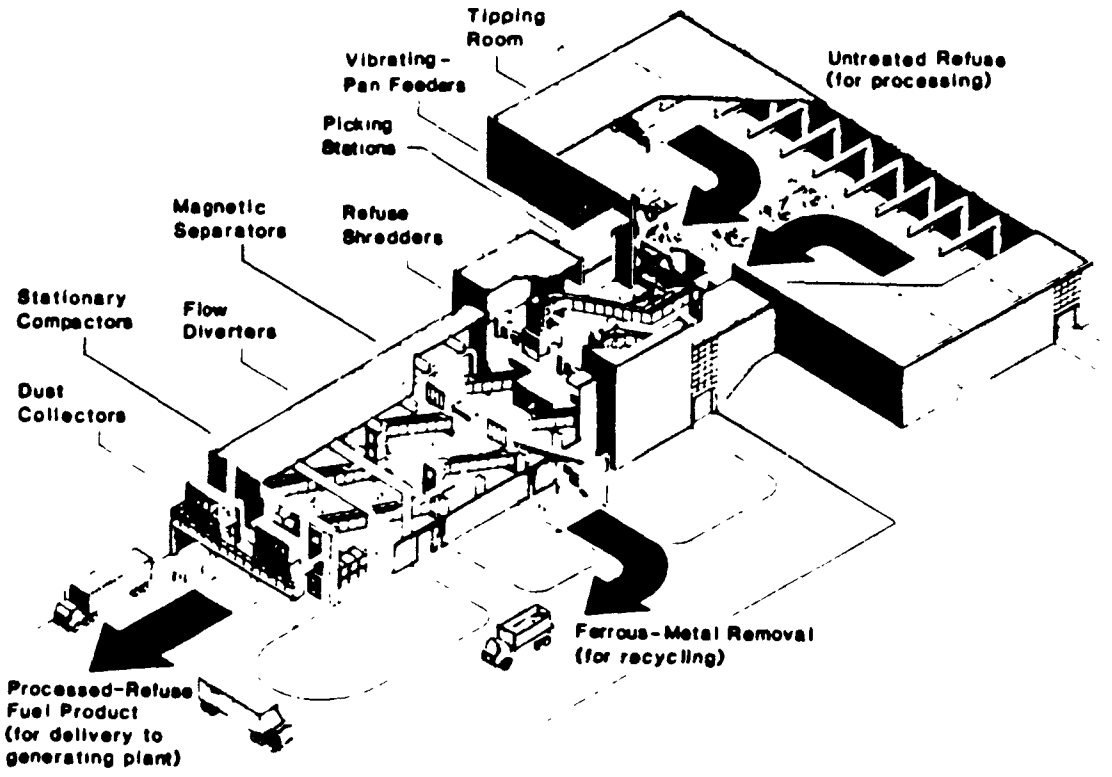

Figure 6-1. Albany, New York, Solid-Waste Energy-Recovery System (ANSWERS).

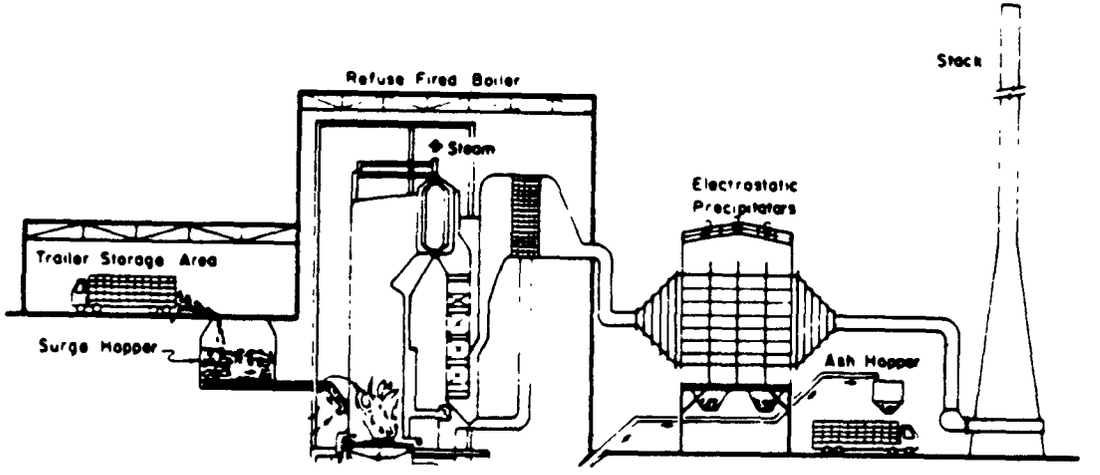

Figure 6-2. Cross-section of Albany, New York boiler plant firing c-RDF.

was that the coarse RDF produced at the ANSWERS processing facility (Figure 6-1) was to be burned in a boiler (Figure 6-2) equipped with a spreader stoker and traveling grate firing system. The two RDF boilers at ANSWERS can fire 100 percent RDF. The firing system design, however, is an adaptation of hardware designs developed for coal- and wood-firing systems. Thus, preprocessing of the waste to produce c-RDF allowed the use of existing American boiler technologies as an extension of experience with a variety of industrial waste fuel and wood residues.

Initial operation of the ANSWERS facility produced RDF with a much smaller particle size distribution than anticipated in the boiler design. As a result, a significant portion of the fuel was entrained into the gas flow instead of falling to the grate. Hasselriis (1983) reports that "too much of the RDF carried up and out of the furnace" and that the incompletely burned material collected in the boiler hopper as char. Further, bridging tended to occur in the hopper. Subsequently, the shredder grates have been changed at the processing facility to produce a larger mean size RDF. Using the larger sized RDF, excessive carry-over can be avoided if the boiler firing rate is held to less than 80 percent of rated capacity. Other factors such as boiler fuel feed design, boiler height and volume, overfire air distribution and grate heat release rate can help compensate for this problem.

The above described initial experience at ANSWERS illustrates that significant operational problems can occur if c-RDF, to be burned in a spreader stoker firing system, has too high percentage of small sized particles. It should also be recognized, however, that the normal size distribution for c-RDF (95 weight percent passes 6 inch square screen) allows relatively large items to enter the firing system. Note that 95 percent smaller than any given mesh size implies the possibility of 5 percent larger than that size. Accordingly, it may be very difficult to actually achieve uniform fuel feed rate in boilers firing coarse RDF. One approach to this problem is a higher degree of waste pre-processing.

6.1.3 RDF-3 or Fluff RDF (f-RDF)

Fluff RDF or RDF-3 production involves removal of ferrous and non-ferrous metals, removal of glass and other entrained inorganics, as well as size reduction such that 95 weight percent of the mass will pass through a 2 inch square mesh screen. This type of fuel is also referred to as f-RDF. Figure 6-3 illustrates the RDF production facility at Ames, Iowa which generates RDF-3. Size reduction is accomplished with primary and secondary stage shredding. Flow to the secondary shredder occurs after magnetic separation of ferrous metals and size segregation in disk screens. Underflow from the first disk screen (less than 1.5 inch) is fed to a second screen. Underflow from the second screening (less than 0.375 inch) consists primarily of fine glass, grit and finer fibers which are disposed of in a landfill. The overflow from secondary screening is combined with the secondary shredder output and fed to an air classifier. The heavy fraction from the air classifier is discarded to landfill (after a secondary magnetic separation) while the lighter fraction is pneumatically transported 600 feet to a large storage bin next to the Ames Municipal Electric Co.

In the above described Ames system the RDF yield is approximately 70 percent of the raw MSW input and the resultant fuel has an ash content typically less than 10 percent. The fluff RDF product was originally co-fired with pulverized coal in a modified Combustion Engineering tangential boiler. The main boiler modification was addition of a bottom burning dump grate to improve burnout of bottom ash. Current operation co-fires the RDF with pulverized coal (PC) in a B&W boiler specifically designed for f-RDF co-firing. Note that the CE unit was originally designed to fire pulverized coal rather than the PC/RDF mixtures.

Figure 6-4 illustrates a slightly different procedure for producing fluff-RDF. This procedure uses trommel screens as opposed to disk screens for size segregation of the shredded material. General operation of the trommel screen is illustrated in Figure 6-5 and shows that the single trommel should accomplish the same task as the scalpering disk screen and fine disk screen combination employed at Ames. The RDF production design shown in

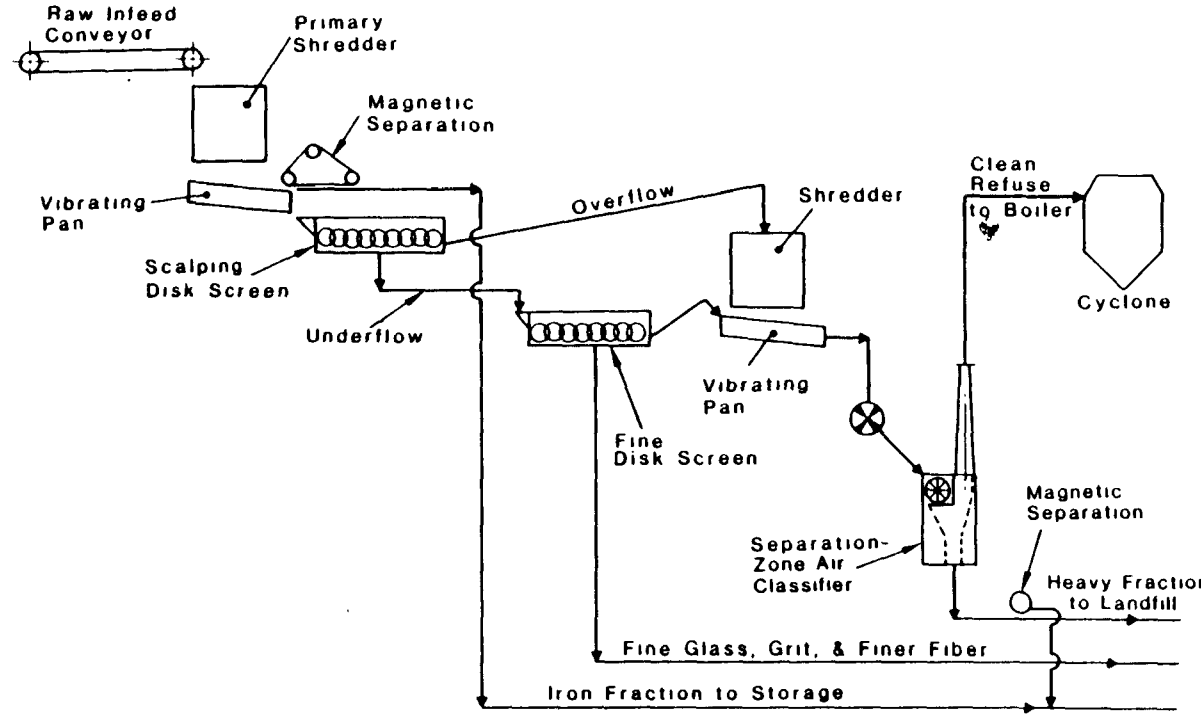

Figure 6-3. Ames, Iowa, Resource Recovery System for production of fluff RDF (f-RDF).

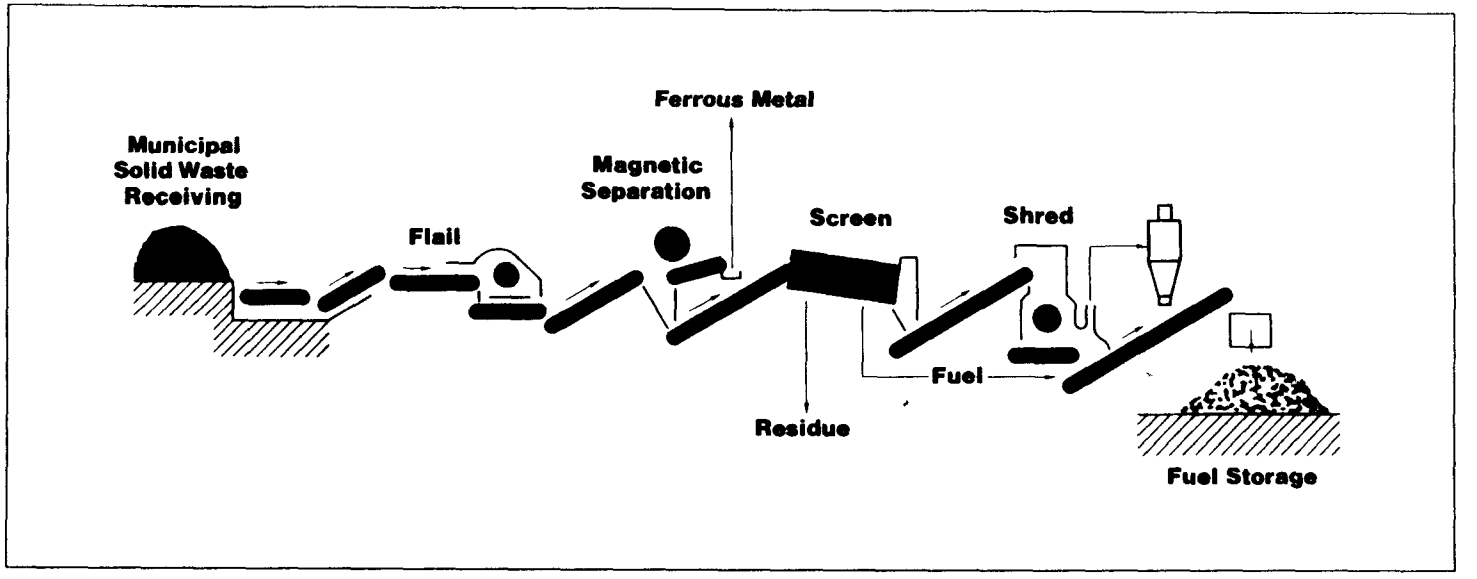

Figure 6-4. Fluff RDF production system. Illustration is for system developed by Combustion Engineering.

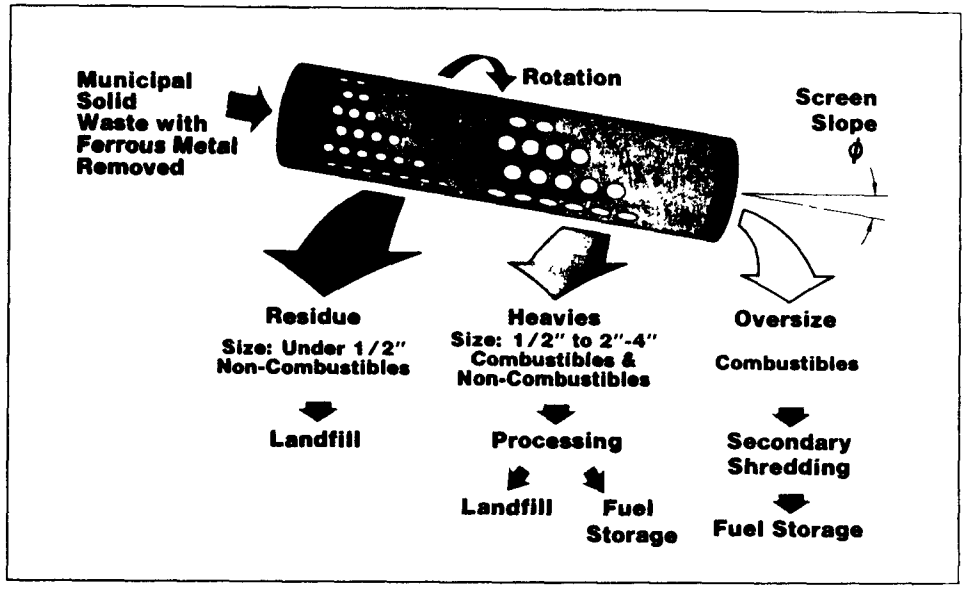

Figure 6-5. Trommel Screen for RDF size segregation.

Figure 6-4 is being employed in four new facilities with scheduled operation to begin in 1987, 1988 and two in 1989. For each of those planned installations the fluff-RDF will be the primary fuel and will be burned in a spreader stoker, travelling grate boiler system. That combustion system will be discussed in Section 6.3.2.

6.1.4 RDF-4 or Powdered RDF (p-RDF)

The best known example of p-RDF is ECO-FUEL™; however, it is reported that Combustion Equipment Associates, the ECO-Fuel producer, is no longer in business. As defined in Table 6-1, p-RDF involves processing the waste into a powder form with 95 weight percent passing through a 10-mesh screen. The mechanical requirements for producing such small size RDF are similar to those for producing fluff-RDF but include a milling step after air classification.

Milling operation will generally require predrying of the waste. In the ECO-Fuel process hot exhaust gas from a process heater is substituted for air in the "air classifier" converting that device to a dryer as well. Drying continues during the ball milling process. The resultant fuel is designed to have a moisture content on the order of 2 to 3 percent and an ash content on the order of 10 to 12 percent. The higher heating value of RDF-4 is expected to be 7500 Btu/lb as compared to approximately 5800 to 6000 for fluff RDF. The use of p-RDF would be for co-firing in pulverized- or cyclone-fired coal fired utility boilers.

6.1.5 RDF-5 or Densified RDF (d-RDF)

There have been a number of demonstration programs which produced pelletized or briquetted RDF for use in spreader stoker boilers with travelling or vibrating grates. As noted by Hasselriis (1983), these short test burns have shown that d-RDF can be successfully burned, with little effect on the boiler performance. The main impact observed was a drop in boiler efficiency due to the higher moisture content of d-RDF relative to coal. The main difficulty with d-RDF is the cost of fuel production and

transportation relative to coal. At the current time there are no known boiler systems continuously operating on d-RDF.

6.2 Current RDF Projects

As of October, 1986 there were 31 active resource recovery projects which are sufficiently advanced to have an estimated construction completion date (McIlvane 1986). Table 6-2 provides a listing of those active projects, noting the location, the projected operational date, facility size and the combustion system supplier. As noted in this table, three of these projects will use fluidized bed combustor to burn the RDF. It is also noted that these new RDF projects tend to be very large scale operations. With the exception of the Franklin Project, each project is larger than 500 tons per day. The Detroit Project is planned for 4000 tons per day.

6.3 Firing Systems in Current RDF Projects

The majority of the current RDF projects will utilize boiler systems from Combustion Engineering or from Babcock and Wilcox. Each of these manufacturers is involved with 5 new RDF facilities. Combined, these two manufacturers represent 81.4 percent of the active RDF projects (tonne per day basis). For the projects using B&W boilers at least three (San Marcos, Palm Beach and Biddeford) will employ combustion systems supplied by Detroit Stoker. The CE facilities will use firing systems designed by CE. The following sections describe those firing systems. As will be shown there are major differences in the two firing system design philosophies.

6.3.1 Detroit Stoker RDF Firing Systems

Detroit Stoker company has manufactured hardware for burning non-traditional fuels such as wood, sawdust, bagasse, etc. since early 1940's. Firing systems developed for burning RDF result in semi-suspension burning where the fuel is injected through wall ports into the furnace. The fuel partially burns in the suspension phase with larger material falling to the grate for burnout on the fuel bed. Figure 6-6 shows the Detroit Stoker air-

TABLE 6-2. ACTIVE* RDF PROJECTS

Project Name and Location	Projected Facility Startup	Size and Boiler Mfgr.
Bay Area Resource Recovery Redwood City, California	1990	3600 TPD C-E(1)
San Marcos Resource Recovery San Marcos (Oceanside), CA	1989	800-1600 TDP B&W(2)
Mid Connecticut Hartford Project Hartford, Connecticut	1987	2000 TPD C-E
Wilmington-New Castle Project Wilmington, Delaware	1986	720 TPD(3) Vicon/ENERCON
Collier County Resource Recovery Naples, Florida	1989	600-900 TPD Westinghouse/ Goetaverkin in circulating fluid bed.
Palm Beach Solid Waste Authority Palm Beach County, Florida	1989	3000 TPD B&W
Honolulu Resource Recovery (H-Power) Honolulu, Hawaii	1989	1800-2000 TPD C-E
Biddeford Resource Recovery Biddeford, Maine	1987	600 TPD B&W
Detroit Resource Recovery Detroit, Michigan	1989	3300 TPD C-E
Mankato Project 1 and 2 Mankato, Minnesota	1987	2@470 TPD each B&W
Redwing Resource Recovery 1 and 2 Red Wing, Minnesota	1987	2@470 TPD each B&W
Penobscot Resource Recovery Bangor, Orrington, Maine	1988	721 TPD KTI

* Active implies that project has progressed to the point of having projected facility start-up data. It does not imply that construction has necessarily begun.

TABLE 6-2. ACTIVE RDF PROJECTS (CONTINUED)

Project Name and Location	Projected Facility Startup	Size and Boiler Mfgr.
Erie Resource Recovery Erie, Pennsylvania	1987	600 TPD Westinghouse/ Goetaverken in circulating fluid bed.
Lubbock Resource Recovery Lubbock, Texas	1987	500 TPD Westinghouse/ O'Connor
Petersburg Resource Recovery Petersburg, Virginia	1986	650 TPD
Southeastern Tidewater Energy Project Portsmouth, Virginia	1987	2000 TPD C-E
Franklin Project Franklin, Ohio	1987	150 TPD 110 TPD RDF to be burned in fluid bed combustor

(1) Combustion Engineering

(2) Babcock and Wilcox

(3) Combined MSW/RDF system

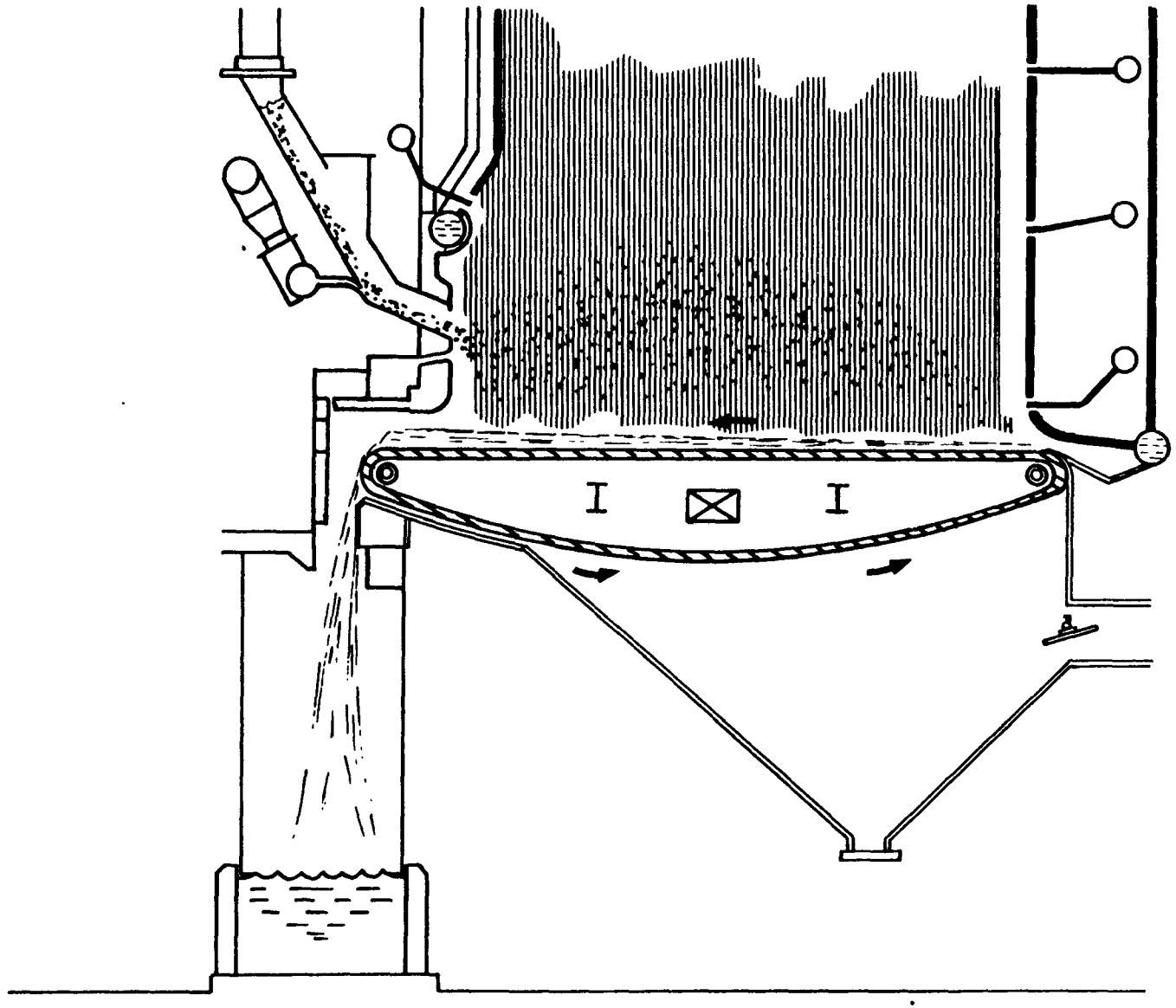

Figure 6-6. Side sectional view of Detroit Rotograte Stoker equipped with Detroit air swept refuse distributor spouts.

swept fuel distributor system coupled with a travelling grate (Detroit Rotograte Stoker). Figure 6-7 shows the same RDF injection system coupled with the Detroit Hydrograte system.

The traveling grate illustrated in Figure 6-6 is based on the design developed for stoker coal firing. The grate forms a continuous loop driven by sprockets at the front and rear of the boiler. As the grate travels from rear-to-front the ash layer thickness increases. Ash is dumped from the grate at the front end of the boiler. The Detroit Hydrograte™ illustrated in Figure 6-7 has an inclined, water cooled grate which is intermittently vibrated to shift the fuel bed (and ash) toward the discharge at the front end of the grate. This grate design is still under development for use with RDF systems but has not been incorporated into actual operating systems. With both grate systems, there is a single plenum for underfire air. Openings in the grates are designed to provide a nearly uniform spatial distribution of underfire air.

A critical component of the design approach is that the fuel injection hardware can provide a thin bed of RDF which is uniformly distributed on the grate. The ash layer thickness will increase from the rear to the front of the boiler but the burning RDF layer thickness will be essentially constant. If that goal is achieved, spatially uniform underfire air addition would result in spatially uniform heat release and excess air levels in the furnace. To accomplish that objective, Detroit Stoker has developed a system comprised of the "Detroit Refuse Feeder" and the Detroit air swept, rotor distributor spout. The Detroit air swept, rotary distributor spout is illustrated in Figure 6-8. A stream of air impinges on the RDF as it falls from the refuse feeder, injecting the fuel into the boiler. A rotating damper is used to modulate the flow of distributor air. With the damper fully open, RDF is blown toward the rear of the grate. With the damper closed, RDF tends to fall near the front of the grate.

A significant portion of the RDF will burn in the suspension phase. The suspension burning and fuel injection scheme allows the RDF to impact the lower furnace walls. To prevent slagging the lower furnace walls in boilers

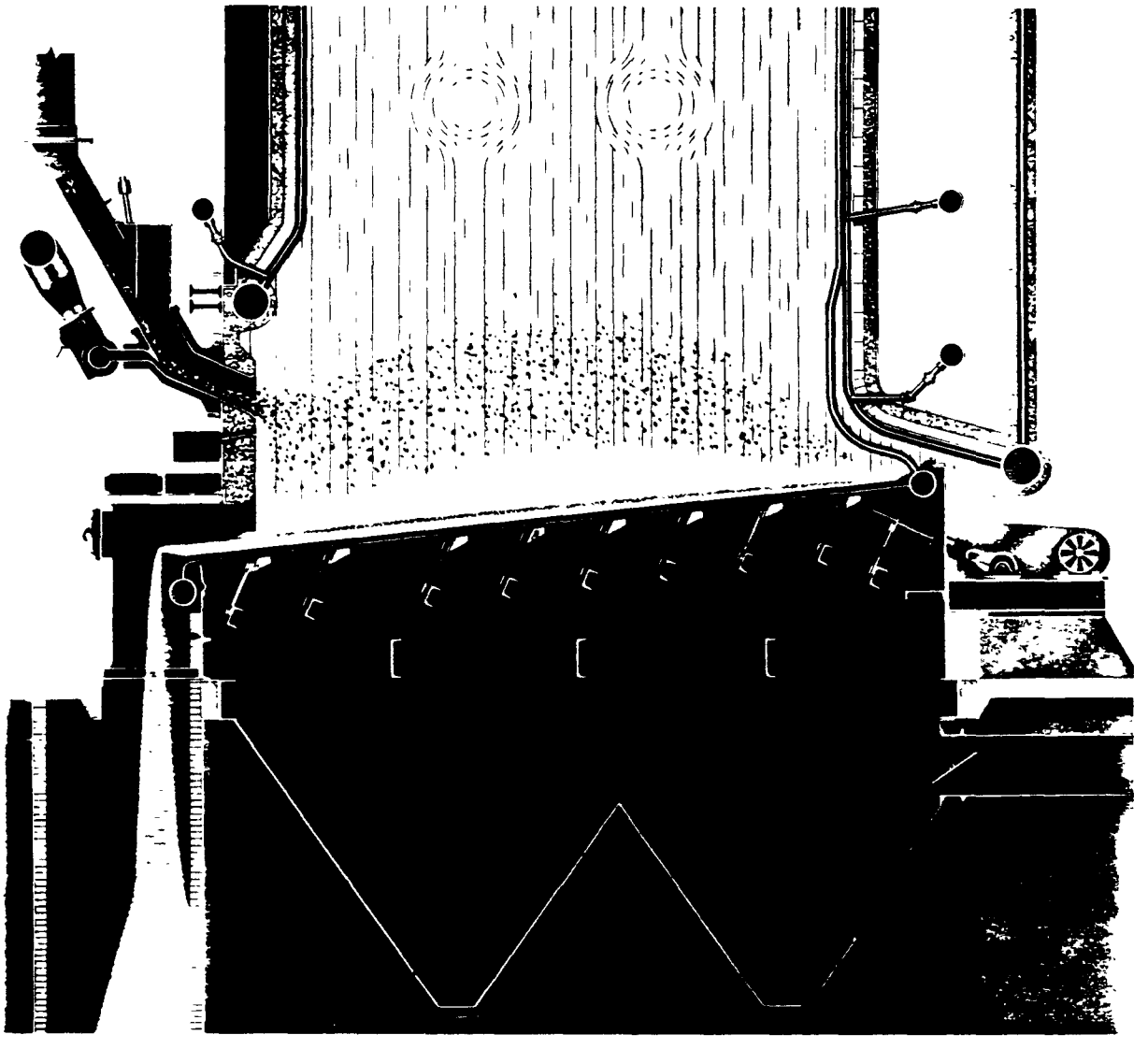

Figure 6-7. Detroit Stoker Hydrograte™ with water cooled, vibrating, continuous-discharge ash-discharge grates.

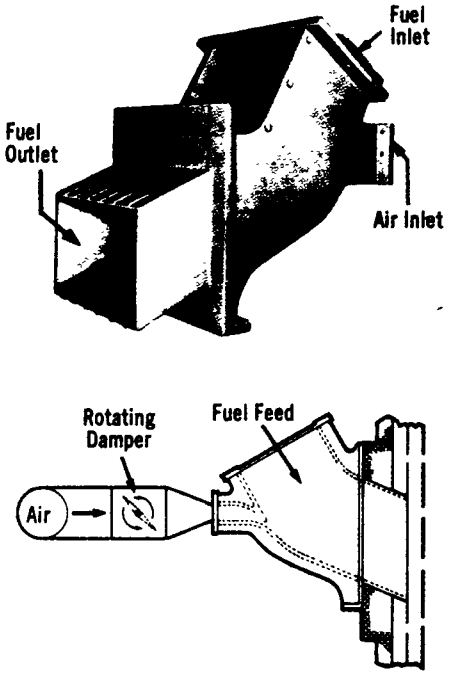

Figure 6-8. Detroit air swept refuse fuel distributor spout arranged with motorized rotary air damper.

designed for RDF firing are bare-tubed, not refractory clad as in mass-burn systems.

As shown in Figures 6-6 and 6-7, Detroit Stoker incorporates several elevations of overfire air ports on both the front and rear walls of the boiler. One elevation of overfire air ports is provided below the fuel injector level. Unlike the systems for MSW firing the furnace walls are straight. Thus, the overfire air must penetrate across the entire plan view dimension of the furnace. Design of the overfire air jet system has evolved over the years. Detroit Stoker is currently considering development of flow modeling capabilities to optimize their designs.

6.3.2 Combustion Engineering RDF Firing System

The RDF firing system employed by CE is based on a spreader stoker/ horizontal travelling grate design. Figure 6-9 illustrates the overall firing system configuration while Figure 6-10 illustrates RDF distributor hardware. As shown, RDF is injected into the furnace by impinging a high pressure air jet on the fuel as it falls from the feed shoot. The distribution air nozzle is adjustable which provides control over the spatial distribution of RDF on the grate.

The grate itself travels from the rear to the front of the boiler with ash dumping at the front of the boiler. As shown in Figure 6-9, the CE design incorporates multiple undergrate air compartments with a siftings screw conveyor in each compartment. The air flow to each undergrate air plenum is individually controllable. Thus, the air flow distribution through the grate can be adjusted to match the RDF flow pattern developed by the fuel feed system.

Overfire air addition is accomplished through a tangential entry system characteristic of CE utility boilers. The tangential overfire air ports are located well above the fuel injection elevation. The design is obviously influenced by CE's utility boiler design philosophy, and by CB experience with burning other waste fuel on traveling grates but has also been optimized

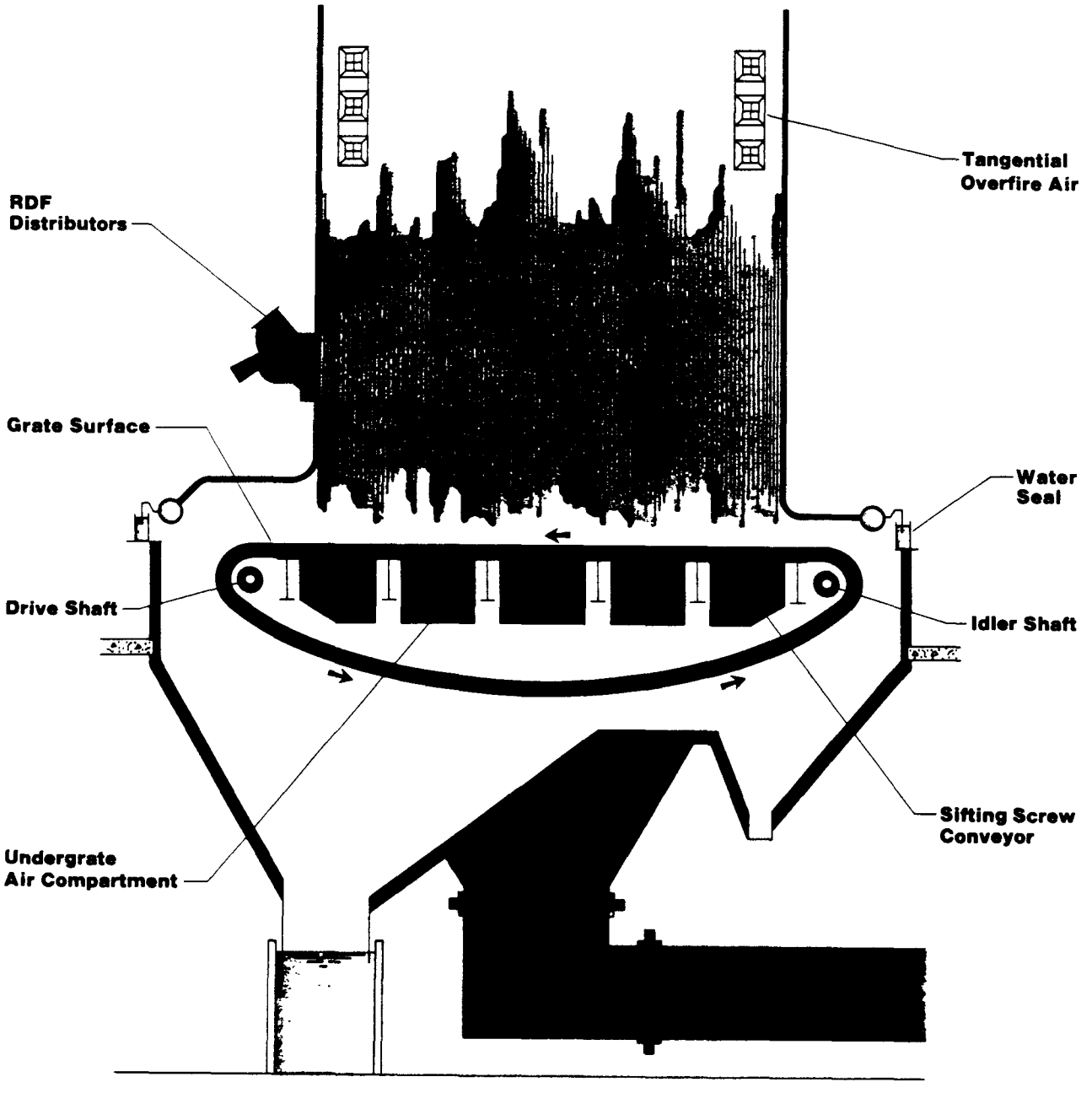

Figure 6-9. Combustion Engineering continuous ash discharge type RC Stoker for RDF.

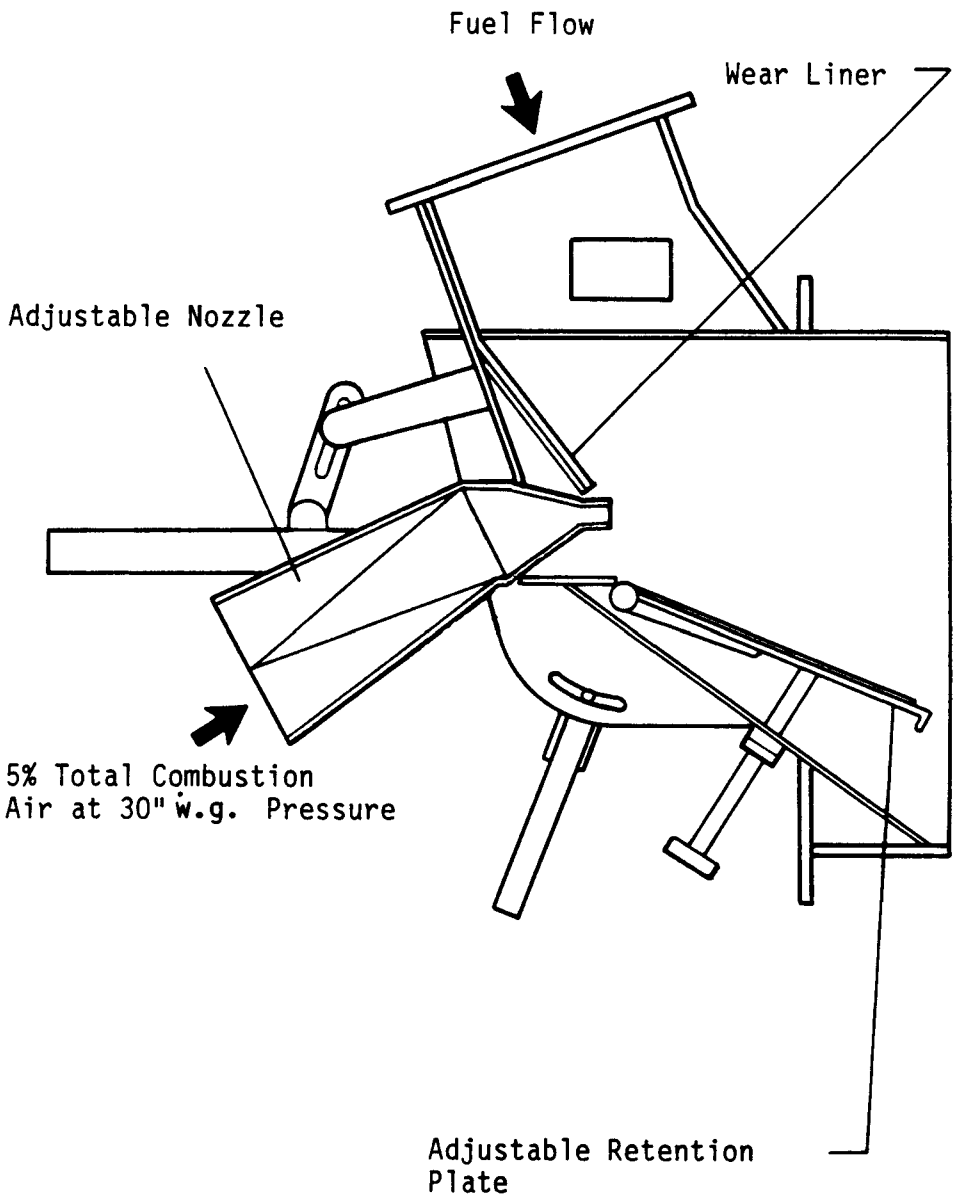

Figure 6-10. Combustion Engineering pneumatic RDF distributor.

through extensive cold flow modeling studies. The first of the CE-designed RDF facilities is scheduled for completion in 1987.

6.4 References

Hasselriis, F. "Burning Refuse-Derived Fuels in Boilers". Part IV of Thermal Conversion Systems for Municipal Solid Waste, H. L. Hickman, Noyes Publication, N. J. 1983.

McIlvane Company. "Waste Burning Projects and People", The McIlvane Company, Northbrook, Illinois, October 1986.

7.0 CURRENT PRACTICE IN STARVED AIR (TWO-STAGE) COMBUSTORS

The literature on municipal waste combustion tends to use the terms "small system," "modular combustor" and "starved-air combustor" interchangeably. In the current study a distinction is drawn between one- and two-stage combustion systems regardless of system size or modular nature of the manufacture. Single-stage systems which operate under excess air condition through the entire combustor were discussed in Chapters 5 and 6. The current chapter discusses two-stage systems where the first stage operates under fuel-rich (starved-air) conditions.

7.1 Starved Air Technologies

The term "modular combustor" implies that the unit is constructed at the manufacturer's facility and shipped as a module(s) to the installation site. Initial development of this type of MSW system came as an advancement to the small batch-fed municipal waste combustors used to burn waste from hospitals, stores, restaurants, etc. The first facility to combine a capability for continuous operation and energy recovery was installed in 1976 by Consumat Systems, Inc. in North Little Rock, Arkansas. Table 7-1 is taken from a report by Hopper (1983) (with updates) providing a select list of starved-air systems in operation in the United States. As illustrated by the data in this table, Consumat is the dominant system vendor for starved-air systems. Other significant suppliers included in this table are Synergy/Clear Air, Environmental Control Products (ECP), and Scientific Energy Engineering (SEE). The Hopper report was published in 1983 and lists sixteen manufacturers of mass-burning starved air systems. Figure 7-1 was provided in the Hopper report to describe the evolution of those U.S. vendor companies. A cursory examination indicates that in 1986 the proliferation of companies listed in Figure 7-1 have begun to contract. The McIlvaine Company's Market Research report on waste burning projects (McIlvane, 1986) indicates that there are eleven active projects (in planning or under construction) involving starved air system greater than 40 TPD. Six of those systems are Consumat projects. Clear Air, Inc. and Ecolair, Inc. each have two active projects while Synergy is involved in one project.

TABLE 7-1. SELECTED DATA ON SMALL-SCALE U.S. SYSTEMS USING THE STARVED-AIR DESIGN

Location	No. of Modules	Capacity (ton/day), Each Module	Date of Startup, Past or Projected	Capital Cost $\$10^6$)	System Vendor	Energy Market
Siloam Springs, Ark.[a]	2	10.5	6/75	Unknown	Consumat	Allen Canning Co.
Blytheville, Ark.[a]	(2)	(36)	8/75	Unknown	Consumat	Chrome Plating Co.
Groveton, N.H.	2	12	Unknown	Unknown	ECP	Groveton Paper Mill
North Little Rock, Ark.	4	25	8/77	1.45	Consumat	Koppers
Salem, Va	4	25	9/78	1.9	Consumat	Mohawk Rubber
Jacksonville, Fla.[c]	1	48	1978	Unknown	SEE	Unknown
Osceola, Ark.	2	25	1/80	1.1	Consumat	Crompton Mills[a]
Genesee, Mich.	2	50	2/80	2	Consumat	Unknown
Durham, N.H.	3	36	9/80	3.3	Consumat	University of New Hampshire
Auburn, Maine	4	50	4/81	3.97	Consumat	Pioneer Plastics
Dyersburg, Tenn.	2	50	8/81	2	Consumat	Colonia Rubber
Windham, Conn.	4	25	8/81	4.125	Consumat	Kendall Co.
Crossville, Tenn.	2	30	12/81	1.11	Env. Services Corp.	Crossville Rubber
Cassia County, Idaho	2	25	1982	1.5	Consumat	J. R. Simplot
Batesville, Ark.	(2)	50	1982	1.2	Consumat	General Tire & Rubber
Park County, Mont.	2	36	1982	2.321	Consumat	Yellowstone Park
Waxahachie, Texas[d]	2	25	1982	2.1	Synergy/Clear Air[d]	International Aluminum Co.
Miami Airport, Fla.	2	30	1982	Unknown	Synergy/Clear Air[d]	Miami Airport
Portsmouth, N.H.	4	50	1982	6.25	Consumat	Pease Air Force Base
Red Wing, Minn.	2	36	1983	Unknown	Consumat	S.B. Foote Tanning
Cattaraugua County, N.Y.[d]	3	37.5	1983	5.6	Synergy/Clear Air[d]	Cuba Cheese
Miami, Okla.	3	36	1983	3.14	Consumat	B.F. Goodrich
Oswego County, N.Y.	4	50	1983	Unknown	Consumat	Armstrong Cork
Pasagoula, Miss.	3	50	1983-84	6+	Unknown	Unknown
Oneida County, N.Y.	4	50	1983-84	Unknown	Unknown	Griffis AFB
Tuscaloosa, Ala.	(4)	(75)	1984	13	Consumat	B.F Goodrich
Hampton County, S.C.	(3)	75	11/85	Unknown	Consumat	Westinghouse
Carthage, Texas	1	40	2/86	Unknown	Consumat	Tyson Foods
Center, Texas	1	40	10/86	Unknown	Consumat	Holly Farms
Barron County, Wisconsin	2	40	10/86	Unknown	Consumat	Twin Tower Cheese Co. Northern States Power

[a] System now shut down and equipment removed.

[c] System now shut down.

[d] Synergy and Clear-Air are now separate companies, each marketing its own system

() Updates as reported by Consumat.

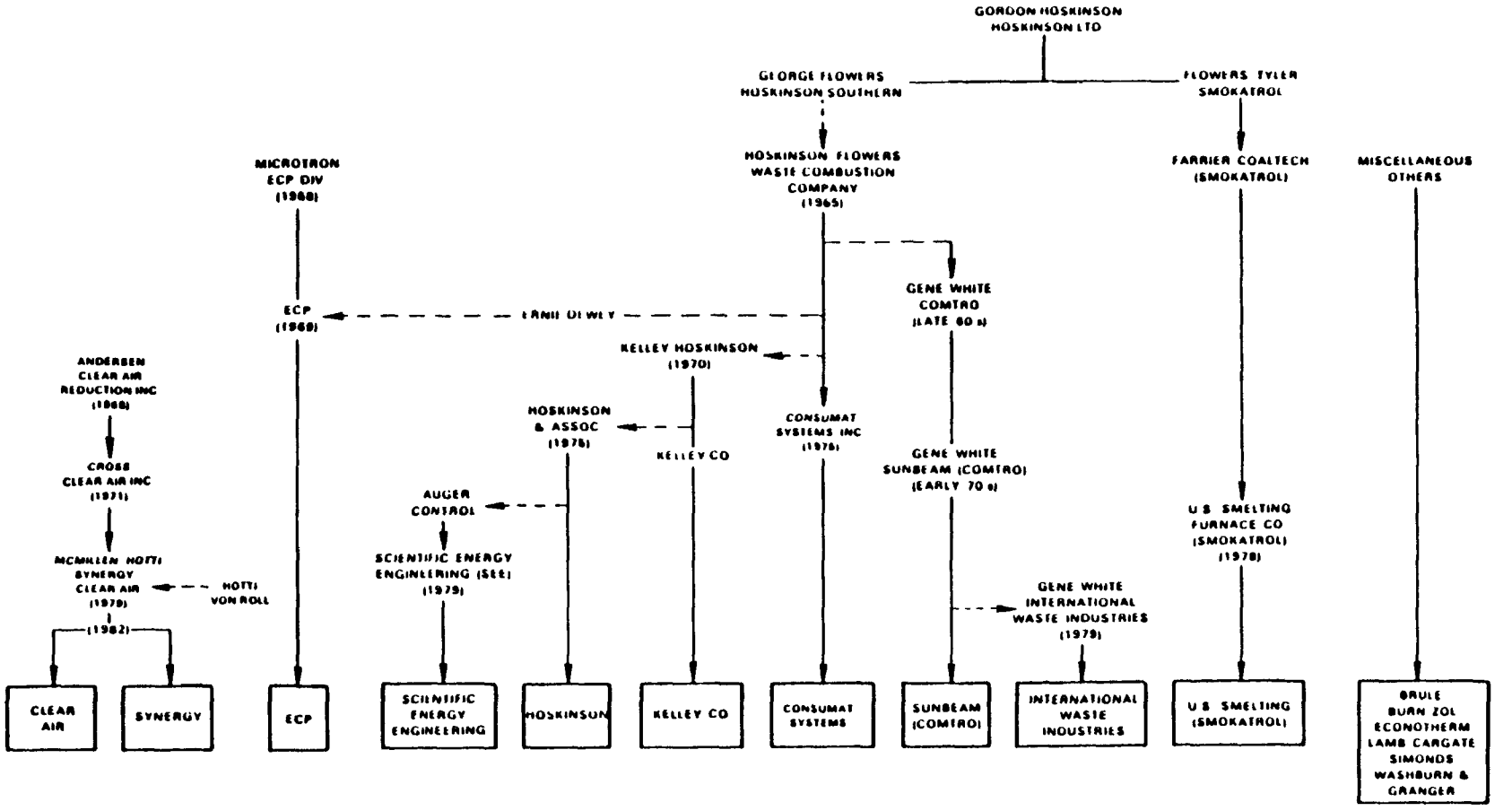

Figure 7-1. Evolution of U.S. vendor companies supplying starved-air waste-to-energy systems, including persons notably influencing system designs.

As part of the current study interviews were conducted with Consumat and Synergy. The Consumat interview was conducted at their manufacturing facilities in Richmond, Virginia. Synergy was interviewed by telephone. The interview format and topics of discussion were similar to those used in the excess air mass burn technology evaluation.

Both Consumat and Synergy are small manufacturing firms without extensive research capability. Recent developments have primarily involved improvements to the mechanical and operational aspects of their product line. Both of these companies build the starved-air systems in a modular fashion. Standard designs have been developed for various size requirements and are offered as multiple modules to meet the demands of a particular project.

7.2 Consumat Systems

Consumat Systems, Inc. has developed a wide range of standardized, starved air, municipal waste combustor designs with continuous ratings from 8.6 to 100 tons of municipal solid waste per day. Figure 7-2 illustrates the standard Consumat module. A front-end loader is used to place a batch charge of MSW into the automatic loader. A hydraulic ram and charging gate assembly injects the MSW into the lower chamber. This lower chamber can be thought of as the first stage in the two-stage system design. The fuel is slowly moved from the front to rear of the first stage by a series of hydraulic transfer rams which are shown in the photograph in Figure 7-3. Holes in the center of the transfer rams are used to provide a controlled quantity of air to the primary chamber. Under normal operating conditions it will require approximately 12 hours for the solid waste charge to traverse from the first-stage entry to ash dump at the end of the chamber.

The quantity of air introduced to the first-stage defines the rate at which the mass burns as well as the quantity of gaseous effluent from the first stage. Figure 7-4 presents results from a theoretical calculation showing the variation in adiabatic flame temperature with percent theoretical air. Note that peak temperatures occur when the fuel/air ratio is near stoichiometric conditions. Under excess air conditions (more than

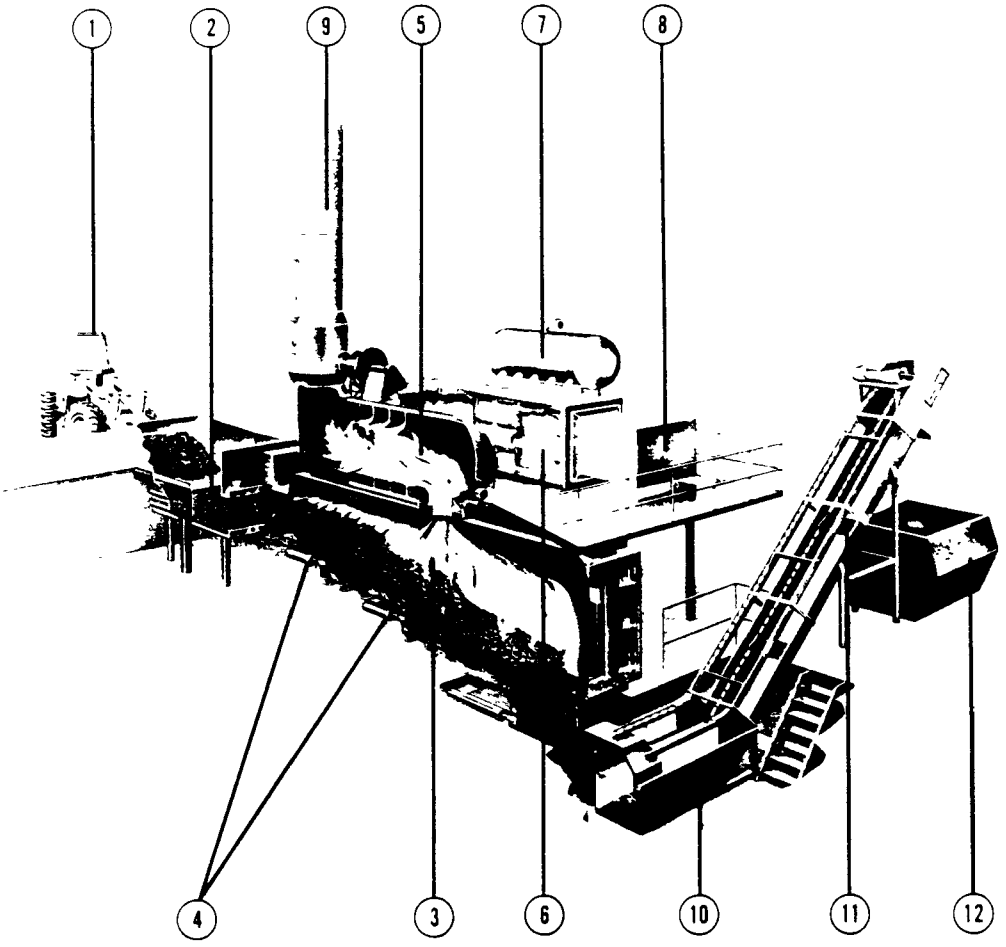

The above cutaway view of the standard CONSUMAT. energy-from-waste module shows how material and hot gas flows are controlled to provide steam from solid waste A front end loader (1) pushes the waste to the automatic loader (2) The loader then automatically injects the waste into the gas production chamber (3) where transfer rams (4) move the material slowly through the system The high temperature environment in the gas production chamber is provided with a controlled quantity of air so that gases from the process are not burned in this chamber but fed to the upper or pollution control chamber (5) Here the gases are mixed with air and controlled to maintain a proper air fuel ratio and temperature for entrance into the heat exchanger (6) where steam is produced A steam separator (7) is provided to ensure high quality steam. In normal operation gases are discharged through the energy stack (8) When steam is not required or in the event of a power failure. hot gases are vented through the dump stack (9) The inert material from the combustion process is ejected from the machine in the form of ash into the wet sump (10) and conveyed (11) into a closed bottom container (12) which can then be hauled to the landfill for final disposal.

Figure 7-2. The standard Consumat module for energy-from-waste.

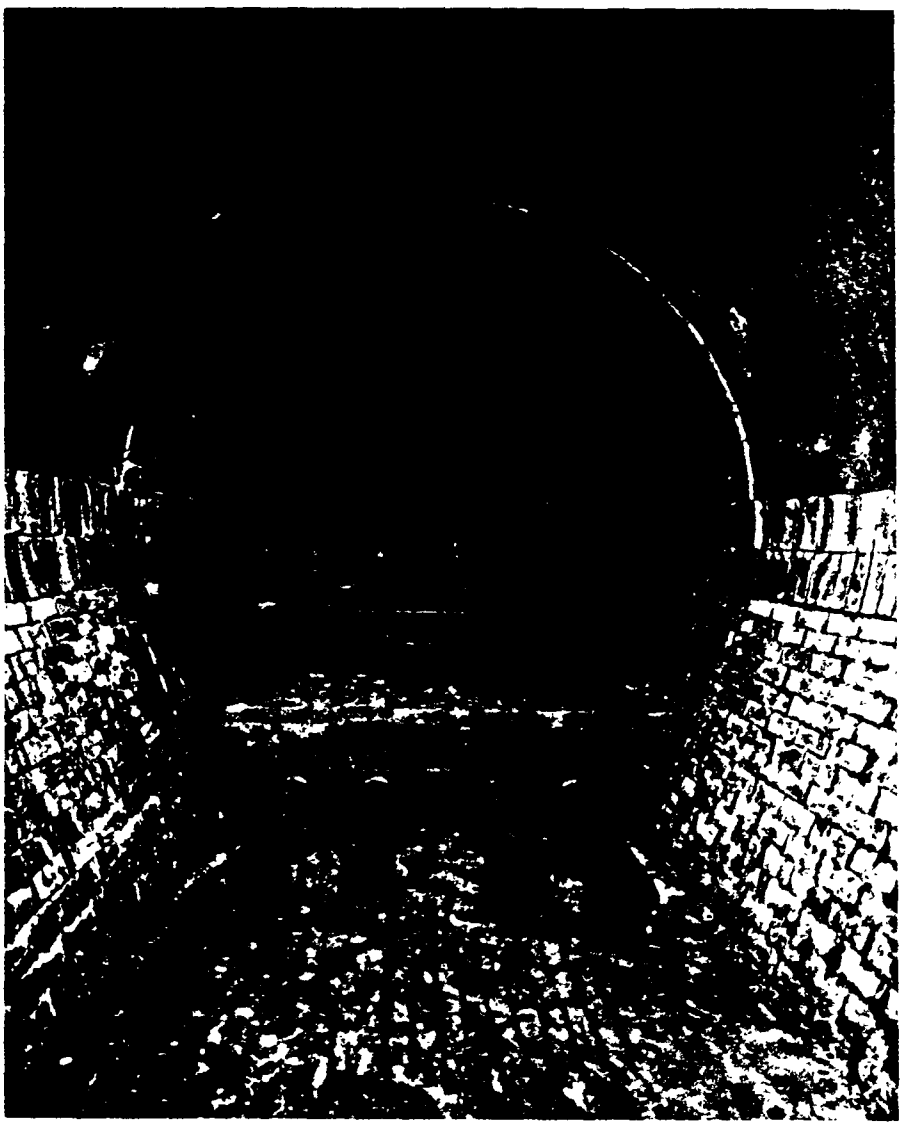

Figure 7-3. Internal transfer rams in primary chamber of typical Consumat facility.

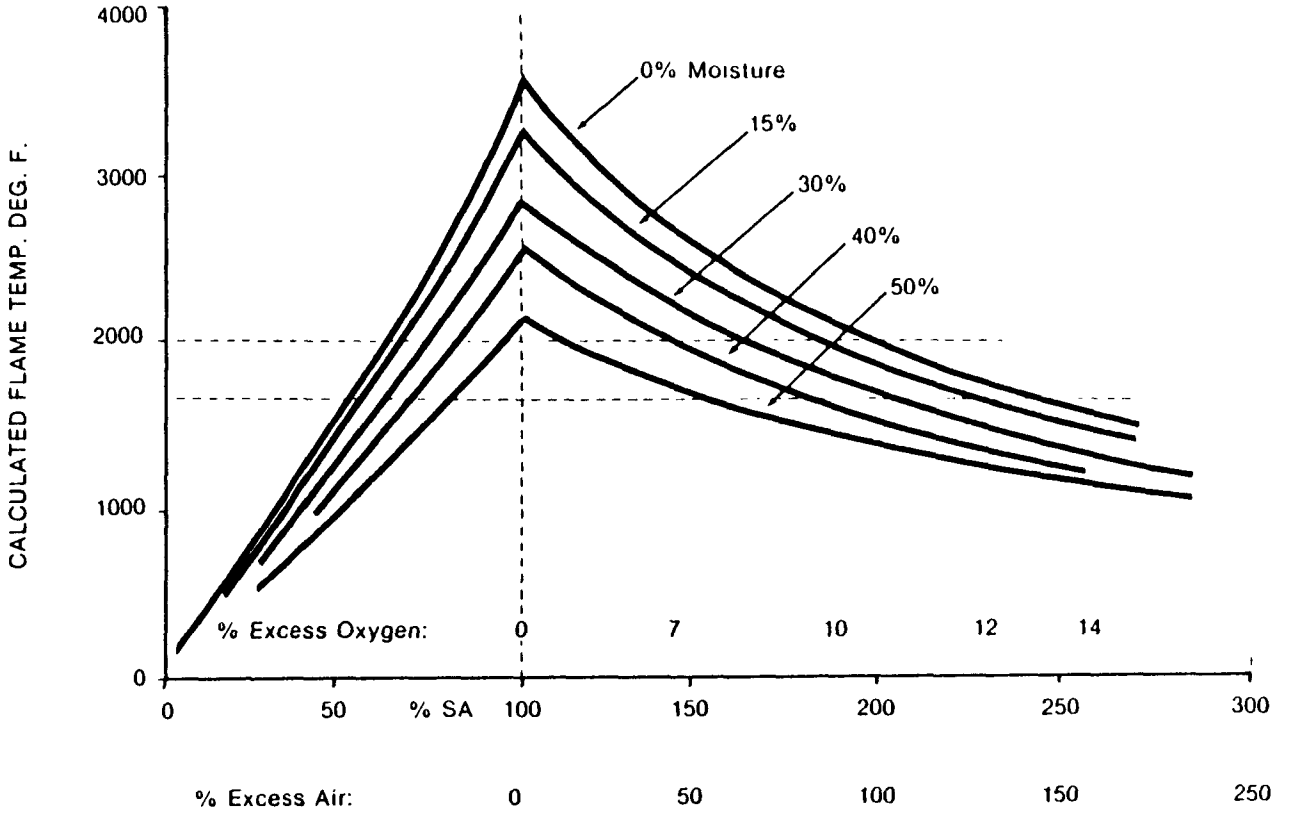

Figure 7-4. Theoretical temperature of the products of combustion, calculated from typical MSW properties, as a function of refuse moisture and excess air or oxygen (Hasselriis, 1986).

100 percent of the theoretical air requirements) gas temperatures fall with increasing air addition due to dilution effects. Temperatures also falls as the air flow is reduced below stoichiometric conditions since the full heating value of the fuel is not released. In the Consumat System design, first-stage air flow is substoichiometric and is controlled to maintain a first-stage exhaust gas temperature set point. The temperature set point is typically in the 1200 to 1400°F range which corresponds to first-stage operation at approximately 40 percent theoretical air.

The first stage essentially functions as a gasifier producing a hot fuel which is transferred to the second stage. In the second stage, additional air is added through a series of wall jets. These jets are oriented in opposed pairs in at least three axial locations in the secondary chamber. It is important to note that the temperature of the fuel-rich gas leaving the first stage (1200-1400°F) is above the autoignition point for the gas composition. Thus, completing the burnout process is a matter of getting air to the first-stage effluent.

There is no heat extraction from either the first or second stage of the combustor. Heat recovery does not occur until a location downstream of the secondary chamber. The quantity of air added to the second stage is adjusted to maintain a given combustor exit gas temperature. The temperature level is typically in the 1800°F to 2200°F range. In the absence of waterwall heat extraction, this is equivalent to between 80 and 150 percent excess air at the second stage exit. Thus, approximately 80 percent of the total combustion air is introduced as secondary air.

As a result of state and local regulatory requirements relative to PCDD and PCDF emissions, Consumat has recently increased the physical size of the secondary combustion chamber. The length and diameter of the chamber have been adjusted to provide a minimum of one second residence time downstream of final air addition at a temperature above 1800°F. In addition, an auxiliary burner is provided in both the primary and secondary chamber. Control of the secondary chamber auxiliary burner is used to assure that the time-at-temperature requirement is maintained.

The control system incorporated into the Consumat System design is now automated. The main parameter being controlled is the first-stage exit gas temperature. Three system parameters are used to hold that temperature constant. These include, in order of priority, the primary zone air flow rate, the frequency of fuel loading and, finally, a water quench is available if the temperature should reach excessive levels. As noted earlier, the gas temperature at the second stage exit is used to control the quantity of secondary air addition and the operation of the secondary zone auxiliary burner.

With the exception of furnace exit gas temperature control, operation of the Consumat combustion components is decoupled from heat recovery operation. The overall system is designed to operate at full load. If for some reason steam production is not required, or if a power failure should occur, exhaust gases from the secondary chamber are vented through a dump stack upstream of the boiler. In some cases, Consumat utilizes either a steam condenser or a steam vent for excess steam rather than by-passing the flue gas.

Available pollutant emission data from Consumat Systems indicates performance commensurate with large, modern waterwall MSW grate systems (Consumat 1986). Consumat Systems achieve total particulate emission levels of 0.08 grains per dry standard cubic foot (corrected to 12 percent CO_2) without the use of any APCD. The PCDD and PCDF emissions have been measured from three different Consumat systems and the average 2,3,7,8 TCDD toxic equivalent emission rate (EPA Method) from these three facilities is 8.0 ng/Nm^3 (see the data base volume entitled "Emission Data Base for Municipal Waste Combustors." This compares with an emission average of 6.0 ng/Nm^3 for modern mass burn/water wall systems. Typical CO levels (corrected to 12 percent CO_2) are found to be in the 20 to 50 ppm range.

The probable reason for the low particulate emission rate is low gas velocities which occur in the first stage. As noted earlier, only about 20 percent of the total combustion air is added in the primary zone. Due to the large diameter of this chamber, the resultant gas velocity is not sufficient to entrain particles from the bed for transport to the secondary zone.

7.3 Synergy

Information on the two-stage combustion system being offered by Synergy Systems, Corporation was obtained through a telephone interview with Mr. William McMillen and Mr. George Hotti (Synergy, 1986). Figure 7-5 illustrates the Synergy two-stage combustion system which has an external appearance similar to the Consumat system. There are, however, many differences in the design and control of the Synergy and Consumat Systems. One of the obvious differences is that the Synergy system is equipped with a reciprocating grate instead of transfer rams. The grate was designed by Mr. George Hotti based on his extensive prior experience with Von Roll in Switzerland. Air is provided to the primary zone through slots between grate rows and air holes at the end of grate plates. The distribution of underfire (or primary) air is achieved through a series of five undergrate plenums, each of which is individually adjustable.

The amount of air flow added in the primary zone was reported to be approximately 20 percent of the total air. The primary zone temperature was estimated to be on the order of 1600 to 1700°F. The primary zone grate system provides an extremely long (8 to 12 hour) solid residence time. The bed thickness at the end of the grate was estimated to be on the order of 18 inches to 2 feet.

The primary (and secondary) zone is refractory-lined and is designed to minimize wall heat loss. Effluent from the primary zone flows into a cylindrical secondary zone with a tangential entry. The secondary zone is separated into two regions by a refractory ring. Secondary air is added in a co-flowing (tangential) direction in the first portion of the secondary chamber and in the refractory ring. Additional secondary air is added through radial air inlets in the downstream half of the secondary stage.

Auxiliary burners are provided in both the primary and secondary portion of the municipal waste combustor. The primary zone burner is used to preheat that chamber during system start-up. The auxiliary burner in the secondary

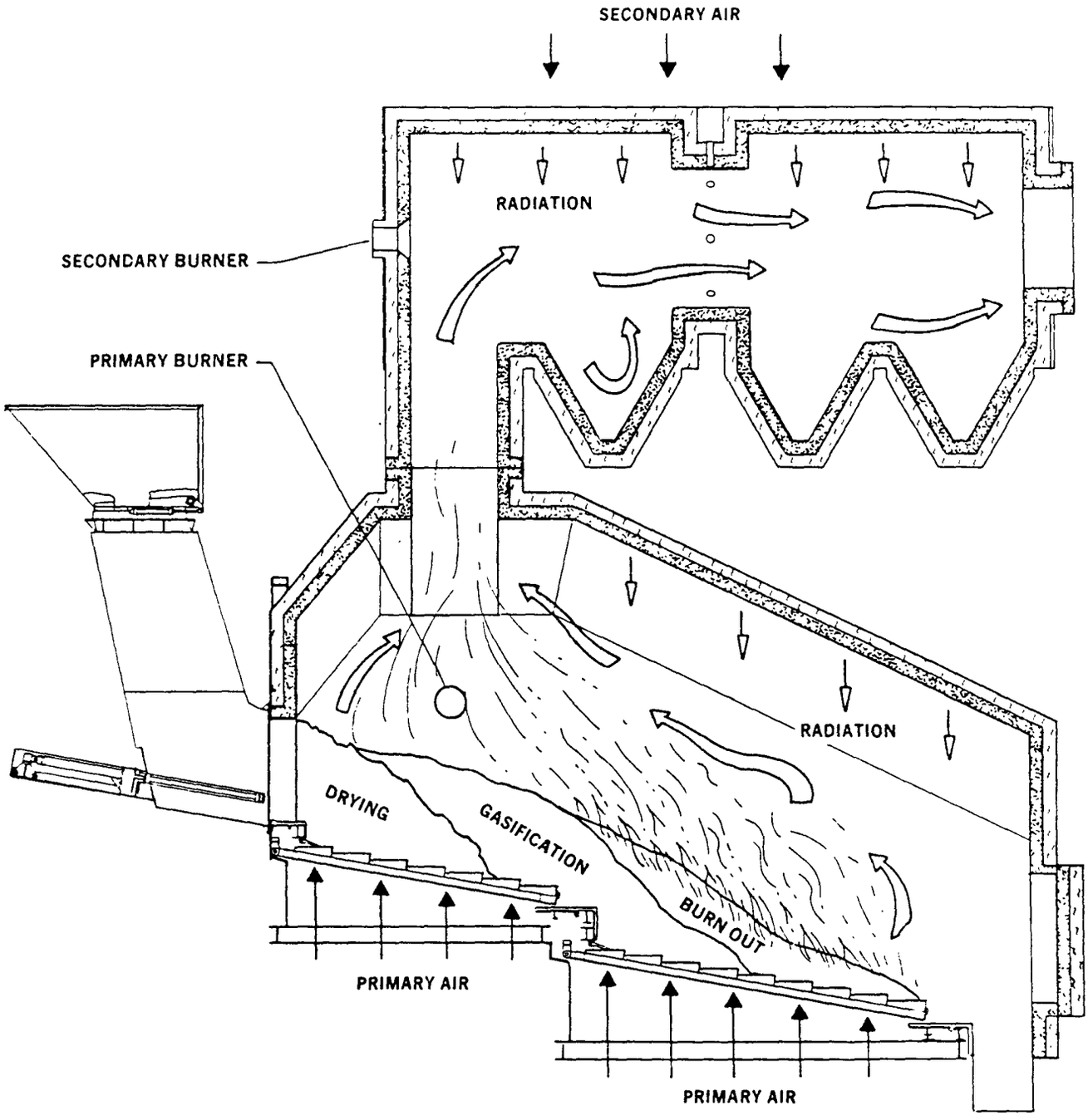

Figure 7-5. Synergy two-stage combustion process.

chamber is used for preheating as well but its main function is to assure that furnace exit gas temperature is maintained at the required level.

Synergy has recently developed a control scheme based on continuous measurement of the gas flow from the primary zone exit. These measurements will be used to control primary zone air flow rate.

Synergy feels that it is important to control both the stoichiometry in the primary zone and to preclude temperature peaks in the secondary zone. The control scheme they have developed is designed to accomplish that objective.

Figure 7-6 illustrates a Synergy two-stage combustion system with energy recovery and shows that no heat is extracted until the waste heat boiler. The size of the secondary chamber has been set to provide a full two seconds residence time above 1800°F (after final air addition). This expensive design change has been made to accommodate anticipated emission regulations. The municipal waste combustion facility currently being installed at Perham, Minnesota will be the first Synergy system incorporating all of the above features. Accordingly, there is not yet any operational data on CO, NO_x, trace metals PCDDs or PCDFs from this type system.

7.4 References

Consumat, 1986. Discussions and Data presented by Consumat personnel (C. Ziegler, C. Stout, W. Wiley) to W. S. Lanier and W. R. Niessen, October 14, 1986.

Hasselriis, F. "Minimizing Trace Organic Emissions from Combustion of Municipal Solid Waste by the Use of Carbon Monoxide Monitors." 1986 National Waste Processing Conference, ASME Proceedings, p. 129, 1986.

Hopper, R. "Small Scale Systems". Part III in Thermal Conversion Systems for Municipal Solid Waste, H. L. Hickman, et al., Noyes Publications, Park Ridge, NJ, 1983.

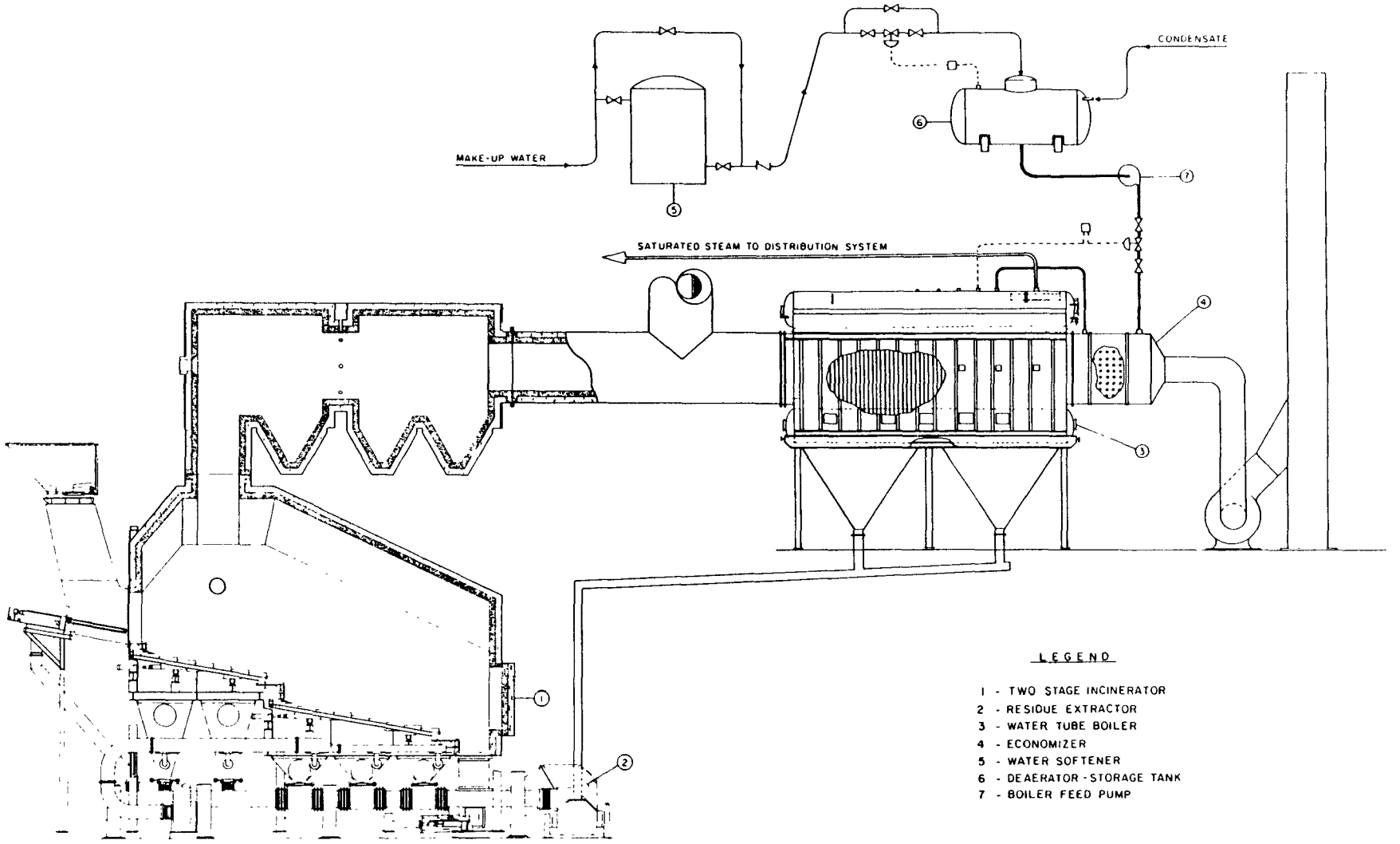

Figure 7-6. Synergy two-stage combustion saturate steam system.

McIlvane. "Waste Burning Projects and People". Market Survey by the McIlvane Company, Northpark, IN, October 1986.

Niessen, W. R. "Dioxin Emissions from Resource Recovery Facilities and Summary of Health Effects", OSW Report, 1986.

Synergy, 1986. Discussions by telephone between G. Hoth and W. E. McMillen with W. S. Lanier, October 17, 1986.

8.0 COMBUSTION CONTROL OF ORGANIC EMISSIONS FROM MUNICIPAL WASTE COMBUSTORS

Tests of modern mass burn Municipal Waste Combustors (MWCs) have indicated emission levels of chlorinated dibenzo-p-dioxin (PCDD) and furans (PCDF) on the order of 1 ng/Nm^3. That is equivalent to an exhaust gas mass fraction of a part per trillion. However, older designs such as the mass-burn refractory system at Philadelphia and even the newer mass-burn waterwall facility at Hampton, Va. have been found to have emissions as much as four orders of magnitude higher than those from modern mass-burn systems. At least part of the high PCDD/PCDF emissions from the Hampton facility may be traced to system control and operation. Thus, even though modern municipal waste combustors can be designed and operated with low emissions of trace organics, they can be designed and operated improperly giving rise to higher emission levels. The purpose of this chapter is to document these combustion practices which, when adhered to, are expected to minimize the emission of trace organics from municipal waste combustors without undue impact upon the emission of other pollutants.

8.1 Design and Operating Problems - Failure Modes

The design or operating conditions which result in higher emissions of hydrocarbons (including species such as PCDDs and PCDFs) will be referred to as failure modes. A clear definition of the potential failure modes will provide insight into how those conditions can be prevented and help to define "good combustion practice". Design goals can then be recommended which will help avoid the failure. In this manner, organic emissions can be minimized.

The establishment of the dominant failure modes must be accomplished by careful consideration of the cause and effects of system parameters on PCDD/PCDF emissions. In this study, failure modes were established in two ways. First, the experience base associated with the designers and manufacturers of municipal waste combustors was investigated. Each manufacturer contacted was asked to identify failure modes for their particular system. Few of the manufacturers had specific cause and effect data. Most relied upon their

understanding of how PCDD/PCDF and other organics might be formed or failed to be destroyed and how their specific system operated. The second approach relied on an examination of combustors which have been reported to have PCDD and PCDF emissions on the high end of the range for the current data base. A comparison of these cases with current practices revealed key differences which likely contributed to the higher emissions, and which are therefore considered to be failure modes. The following subsections will discuss the potential failure modes which have been identified in this study. It should be noted that those potential failure modes do not necessarily apply to every design within a given class of combustor.

8.1.1 Mass Burn Waterwall Failure Modes

The potential failure modes identified by the manufacturers of mass-burn waterwall combustors are summarized in Figure 8-1. Starting with the input of the refuse onto the grate, the failure modes are as follows:

1. Non-Uniform Introduction of Waste: Improper introduction of the refuse onto the grate will result in clumping or poor distribution on the grate and hence improper burning.

2. Insufficent Control of Primary Air Distribution: Combustion air requirements along the bed vary, thus it is important that underfire air be supplied to several independently-controlled undergrate plenums.

3. Insufficient Primary Air Pressure: Proper distribution of the underfire air requires that a pressure drop be taken across a known plane - the grate. Consequently, it is desirable that the grate resistance be sufficiently high to distribute the air flow control.

4. Load Control Systems Allow Closure of Underfire Air: Most modern furnace load control systems use primary air to modulate the combustion intensity of the bed. For example, a high heating value fuel charge will cause a step change in the amount of heat released

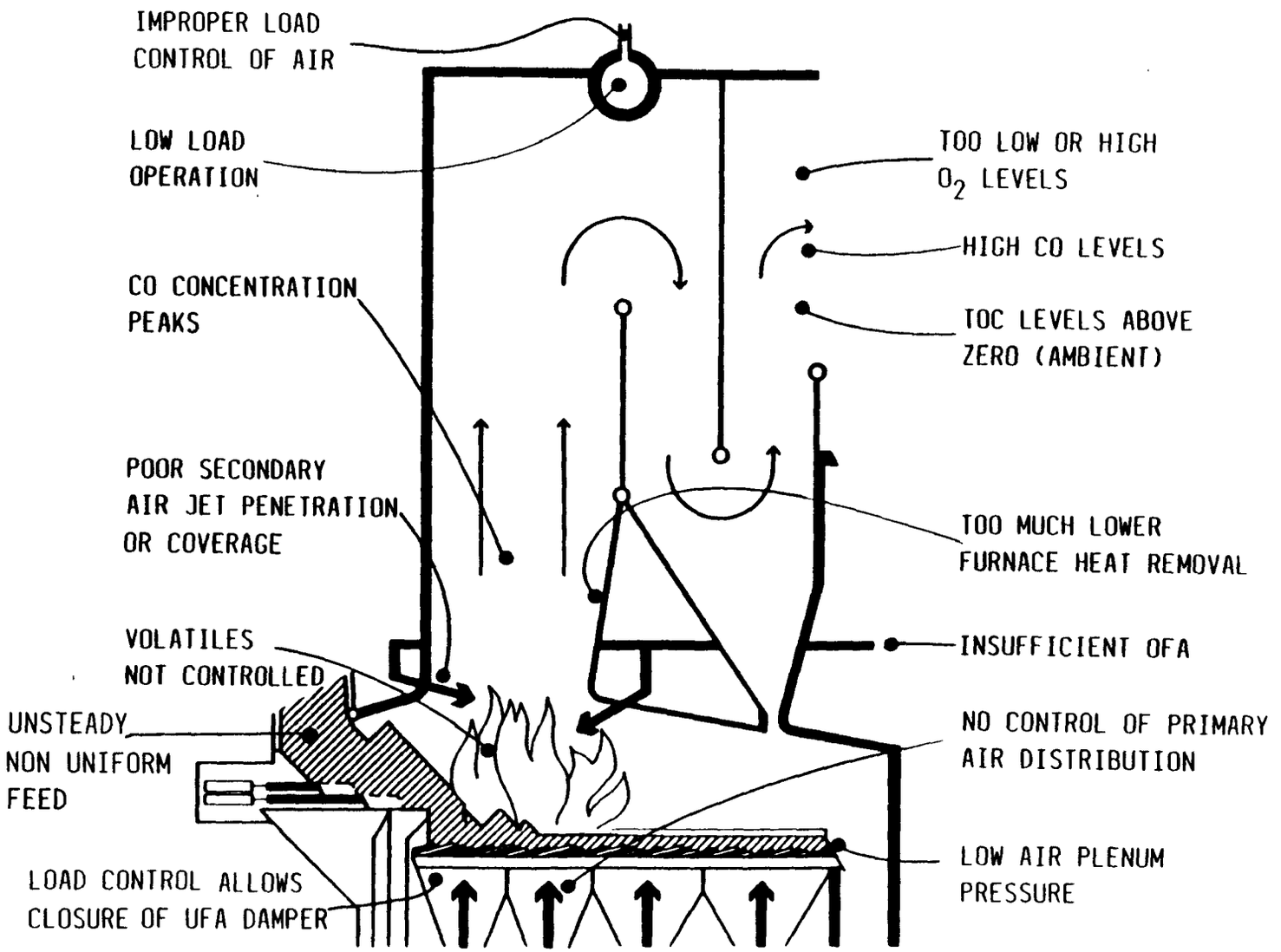

Figure 8-1. Mass burn municipal waste combustor failure modes.

on the grate. The heat release rate can be lowered by dropping the primary air flow. If this control technique is used to the extreme, then the control system can cause oxygen-starved conditions to exist in the entire lower furnace.

5. Control of Volatile Heat Release: Whether this item is a failure mode is a point of controversy with different manufacturers. Some manufacturers believe strongly that the volatiles released from the bed must be redirected into hotter combustion zones by the furnace configuration. Others believe that this is not critical and merely a refinement.

6. Insufficient Overfire Air: In almost all mass burn designs, overfire air is used to control flame height and to mix the furnace gases before they enter the upper furnace. If insufficient overfire air is employed, then mixing of the furnace gases and the combustion air may be inadequate allowing the existence of fuel-rich pockets of combustion products.

7. Inadequate Secondary Air Jet Design: All manufacturers stressed the importance of furnace mixing to prevent PCDD/PCDF emissions and generally the designs relied on overfire air jets to promote mixing. Poor coverage of the furnace flow (e.g. improper locations or insufficient jets) or low jet penetration (e.g. insufficient jet momentum) will result in poor mixing of the overfire air and the gases rising from the grate.

8. Excessive Lower Furnace Heat Removal: After mixing with air, all furnace gases should be hot enough to ensure that all hydrocarbons are destroyed. If there is too much heat removal in the lower furnace, then the temperature at the fully mixed height will be too low to ensure complete destruction of the pollutants.

9. Low Load Operation: Mass burn systems are not tolerant of load changes. At very low load, temperatures may fall to the point

where efficient destruction of organics cannot be maintained. However, even at moderately low loads, conditions can deteriorate due to other failures such as insufficient overfire air, poor overfire jet penetration and lower temperatures. Some manufacturers suggested that loads less than 85 percent of the design are inappropriate.

10. Low or High O_2 Levels: If exhaust excess oxygen level is too low, then oxygen-starved zones may exist within the furnace or a charge of volatile refuse may momentarily lower the entire furnace volume to oxygen-starved conditions. If the oxygen level is too high, then the excess air levels will excessively cool the furnace giving low temperatures which will affect the destruction of hydrocarbon species.

The fractional part per trillion PCDD/PCDF emission concentration measured for some modern mass-burn, waterwall combustors is, very likely, the result of the strong emphasis placed upon the attainment of uniform combustion conditions for the mitigation of fireside corrosion problems. In-furnace testing and system re-designs have been undertaken to minimize mal-distribution of combustion gases particularly in Europe. Because fireside corrosion rates are dependent upon gas-phase stoichiometry this emphasis on the attainment and verification of uniform conditions will most probably minimize the emissions of trace organics by preventing low temperatures or long life-times for fuel-rich products.

A few MSW systems have been found to have noticeably higher PCDD/PCDF and unburned carbon emission levels than those measured in other systems. These systems were generally designed before there was concern over PCDD/PCDF emissions. Their design objectives were generally to ensure refuse throughput and constant steam production, without consideration being given to the impacts of design on organic emissions. One such system is being investigated currently to determine how it might be modified and operated to minimize emissions of these species. The failures of this system to minimize

emissions and the proposed modifications will serve as a specific example of potential failure modes of mass burn systems.

The NASA/Hampton refuse-fired steam plant in Hampton, Virginia, began operation in September, 1981. The plant consists of two combustors each with a design rating of 100 T/d. The combustors (Figure 8-2) employ six-foot wide, two-section reciprocating grates with a vertical drop-off between sections. Underfire air is controlled separately to the two sections of the grate and overfire air is added under the front wall nose, on the back wall and on the side walls. The boiler furnaces are top-supported, natural-circulation, single-pass systems. Silicon carbide refractory is used in the lower furnace to a height of two feet above the last air injection point. The primary combustion control system modulates ram feeder frequency and inlet dampers on the underfire air fan in order to maintain steam pressure. A secondary loop modulates the grate reciprocating rate to maintain upper furnace gas temperature.

Measurements of PCDD and PCDF emissions from the Hampton facility generally established the high end of the emission data base range shown earlier as Table 2-1. The manufacturer has made major changes in its design of more recent mass-burn systems and is currently investigating modifications to the design and operation of Hampton. Several failure modes have been identified by the manufacturer of the grate used at Hampton as probable causes for the non-optimal emission performance. The primary problem identified to date is associated with a design oversight in the automatic control system. A detailed discussion of the control system developed by NASA for the Hampton facility is included in a report by Taylor, et al. (1981). Briefly, the control scheme is designed to maintain a constant steam production rate. Steam production is controlled by adjusting the modulation rate of the burning grate and by adjusting a damper on the forced draft (FD) fan supplying underfire air. With the facility operating at a given steam production set point, the primary function of the control system is to account for the variability in MSW heating value and volatility. The control scheme does an excellent job of maintaining a constant steaming rate. When a pocket of high heating value MSW fuel begins to burn, steam production will

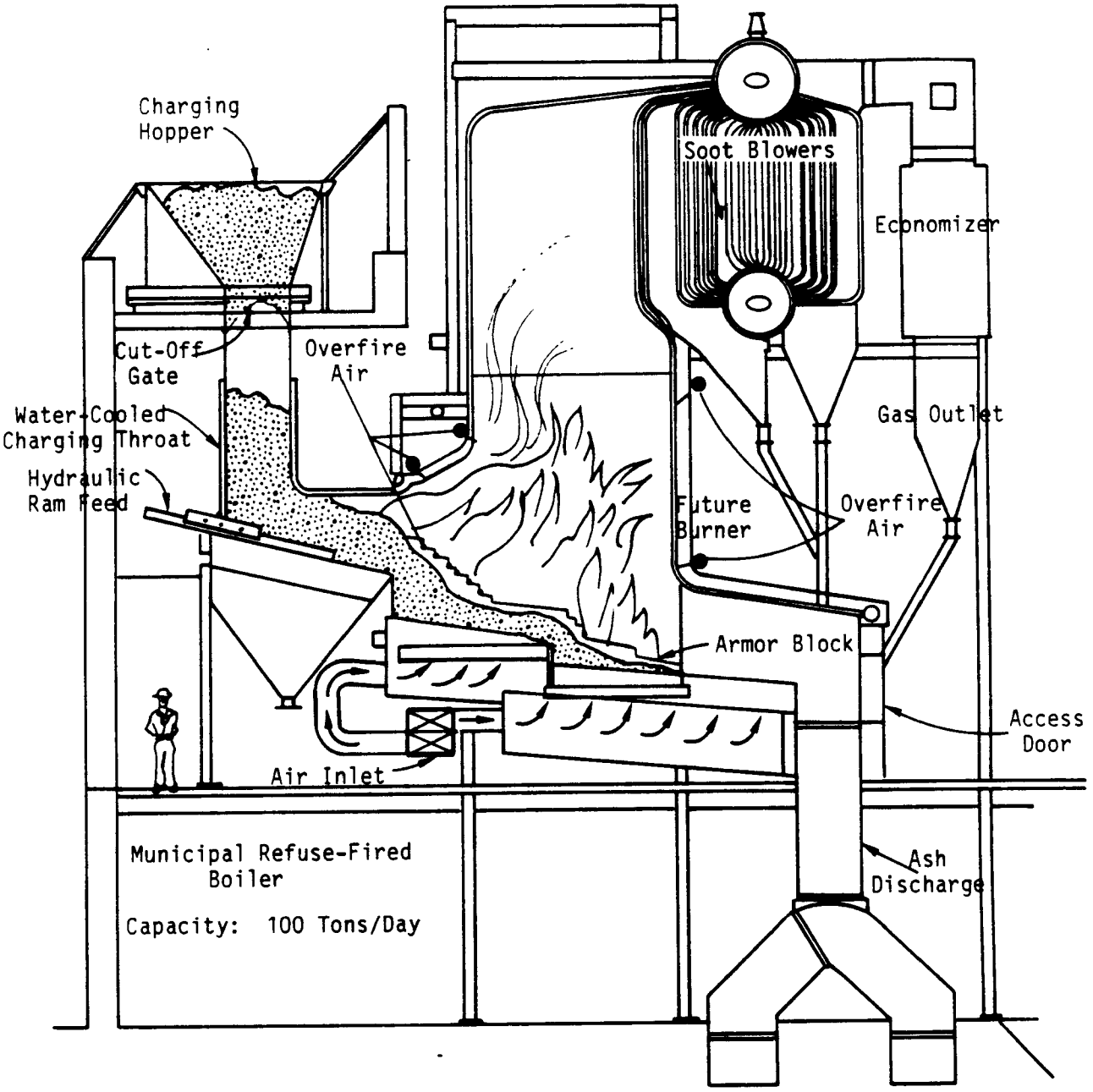

Figure 8-2. Boiler sectional side of NASA/Hampton mass fired waste-to-energy facility.

start to rise. The controller will compensate by closing down the FD fan damper. The control system design oversight was failure to establish a lower limit for closure of that damper. Failure occurred when the damper completely closed off the underfire air (for short time periods) leaving the refuse bed to smolder under starved-air conditions. The manufacturer reports that plant data shows the FD fan damper continually modulating from fully open to fully closed.

Compounding the problems caused by the automatic controller is the fact that this facility was constructed with an insufficient overfire air capacity. Although the original design called for 30 percent of the total combustion air to be supplied as overfire air, recent tests indicate that actual overfire air capability is only 15 percent. This construction (not design) flaw exacerbated the control system problem and allowed fuel-rich pockets of gas to escape the high temperature region of the furnace. Furthermore, although stack gas O_2 level was monitored continuously, the temporary fuel-rich operation was not detected because of significant air in-leakage. This in-leakage, driven by the induced draft fan, masked the fuel-rich operation of the main boiler.

The Hampton facility was the first MSW installation in the U.S. to incorporate a complete automatic control scheme (Taylor et al. 1980) and it should be noted that the failure modes noted above are probably correctable. A lower limit can be set on closure of the FD fan damper, and the system can be brought up to its original overfire air design specifications. Well-documented tests before and after modification could provide a data base upon which to build design guidelines.

8.1.2 Refuse Derived Fuel Spreader Stoker Failure Modes

Refuse Derived Fuel (RDF) fired on spreader stokers have some potential failure modes that are similar to those of mass-burn units. However, the unique features of RDF spreader stokers can also lead to different problems. A summary of potential failure modes that could occur is provided in Figure 8-3. These include the following:

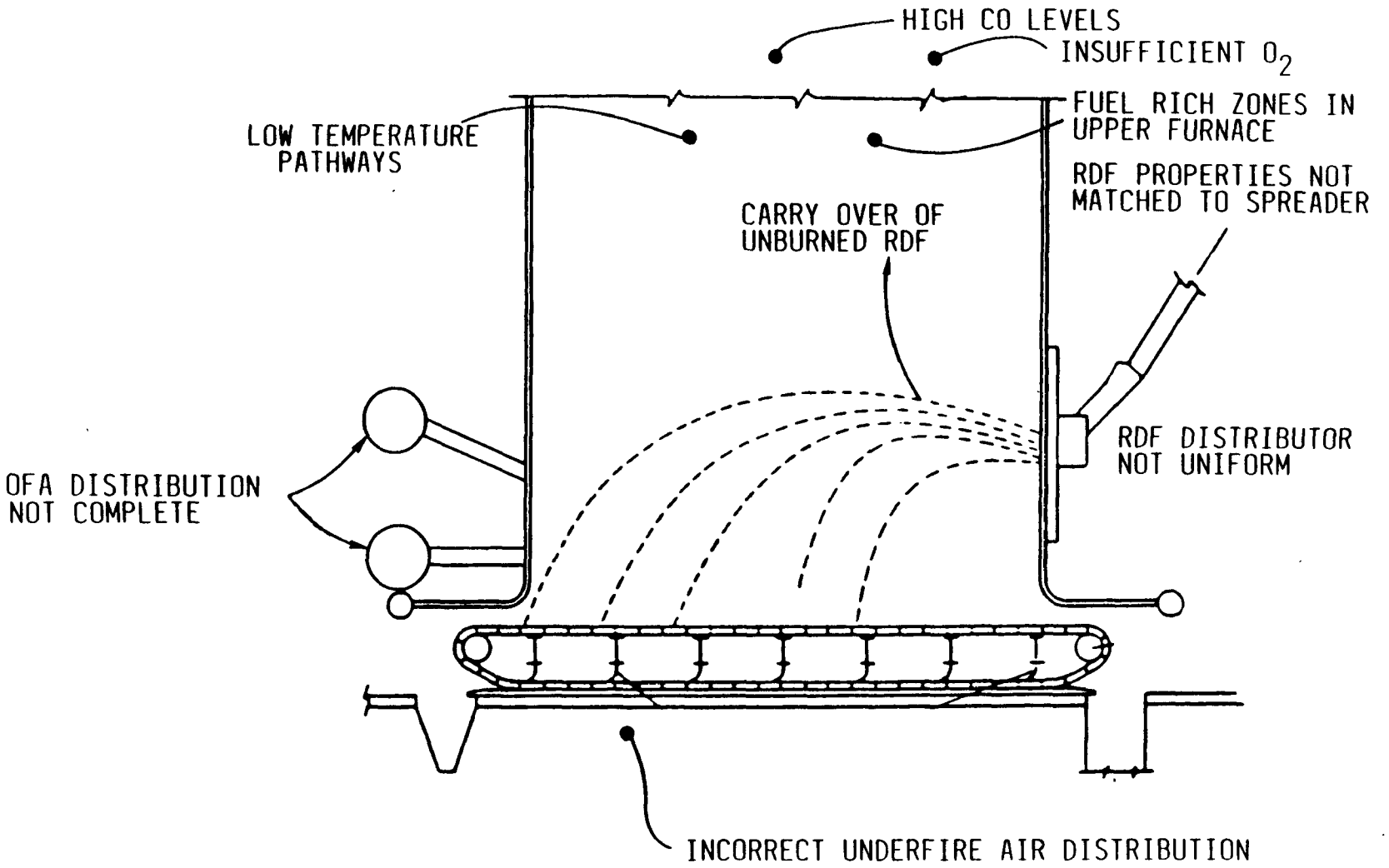

Figure 8-3. Failure modes of RDF spreader-stoker systems.

1. RDF Properties Not Matched to Spreader. Spreader designs are generally matched to the characteristics of the RDF in order to disperse the fuel adequately on the traveling grate. Changes in refuse size and density can adversely impact the distribution of the RDF.

2. RDF Distribution Not Uniform. The performance of the spreader is crucial to the successful operation of the combustor. The spreader must spread the fuel uniformly on the grate or there may exist zones which are oxygen-starved.

3. Incorrect Underfire Air Distribution. In a fashion similar to mass burn systems, if the underfire air is not distributed in the same region as the combustibles, then oxygen-starved zones can occur. Incorrect air distribution can result if there is too low a pressure drop across the grate and no ability to control the air to separate plenums.

4. Incorrect Overfire Air Distribution. If overfire air is not mixed efficiently with the furnace gases, then oxygen-starved conditions and non-uniform temperatures can exist in the furnace which can result in the escape of unburned organics.

5. Excessive Heat Removal. Excessive lower furnace heat removal by waterwalls will result in low combustion gas temperatures which may be too low to ensure the destruction of organic intermediates.

6. Carryover of Unburned RDF. The unique feature of spreader stokers is that RDF is burned in partial suspension. This can lead to an additional potential failure mode if there is significant carryover of unburned RDF which may contain precursors to toxic organics.

7. Low-Load Operation. RDF systems are susceptible to failure at lower loads due to lower temperatures and poorer mixing conditions similar to mass burn systems.

9. Low or High Oxygen Levels. Just as with mass burn systems, oxygen levels can be either too high or too low.

The measurements on PCDD/PCDF emissions from RDF waterwall systems are limited. However, there is some indication that emissions from RDF firing are higher than those from mass-burn systems (Camp, Dresser and McKee, 1986). It should be emphasized, however, that the indicated variations may be due to data base limitations as well as variations in the application of downstream air pollution control devices. The key differences in RDF spreader stoker systems that could account for potentially higher emissions are as follows:

- Semi-suspension firing of RDF allows carryover of unburned materials. This unburned material may be a precursor or allow the formation of precursors of toxic organics in the cooler regions downstream of the injection point. Destruction may not be possible because residence times are less and temperatures are lower.

- Some overfire injection schemes do not appear to be designed to achieve complete coverage and penetration of the flow. Mixing and uniformity are achieved by fuel dispersion rather than by stirring caused by the overfire air jets.

- Unclad steam tubes in the lower furnace increase heat extraction rates and lower combustion temperatures. This may prevent the destruction of trace quantities of organic species.

8.1.3 Small, Multi-Staged Modular Unit Failure Modes

Small, modular starved-air combustion systems have design strategies which are significantly different than their large mass-burn excess air counterparts. Many or all of the failure modes listed for mass-burn waterwall systems could also apply to starved-air systems. However, the equipment generally sold eliminates or modifies many of these potential failure modes.

Non-steady, non-uniform mass feed and overcharging were identified as potential failure modes for excess air systems. Typical solids residence time in starved-air systems is on the order of 10 to 12 hours. Consequently, the effects associated with any non-uniformity in the fuel feed are damped to a large extent because of the mass of the fuel bed.

A major concern in mass-burn and RDF systems is inadequate control of both the amount and distribution of underfire air. In contrast, starved-air systems are designed to generate a fuel-rich gas in the primary chamber, which is then combusted further in the secondary chamber. Thus modulation of the primary air flow is less important in a starved-air system than in mass-burn or RDF system. Primary air flow rates will, however, affect waste throughput and ultimately the composition of the residue.

Perhaps the most critical aspect of starved-air systems with respect to the emission of trace organic compounds is the design of the overfire air system. Fuel-rich pockets of gas flow from the primary to the secondary furnace zone. Failure to mix that primary zone effluent with a sufficient quantity of air could allow trace organics or their precursors to exit the secondary furnace, providing the opportunity for an increase in their emissions.

It is possible to quench second-stage burnout reactions through excessively fast heat extraction. Current design philosophy minimizes heat loss for approximately one second (mean gas residence time) after secondary air injection. Thus, excessive reactant quenching is avoided.

PCDD and PCDF emission levels from starved-air systems generally fall in the low end of the range of emissions from MSW systems. Thus, it appears that the current design philosophy for starved-air systems is capable of maintaining relatively low emissions of these compounds. However, failure modes can be envisioned which would impact emission levels adversely.

8.2 Combustion Strategy for Minimizing Emissions of Air Pollutants

Definitive cause and effect data on the relationships between design and operating procedures and emissions of organics such as PCDD/PCDF from municipal waste combustors do not exist. A significant body of data has been developed by Environment Canada in their tests on the Quebec City combustor. These tests clearly demonstrate that combustion control significantly reduces trace organic emissions. Further analysis of that data may provide some of the required cause and effect information.

It is clear that PCDDs/PCDFs or at least their precursors are organics which form as intermediates in the combustion process. The vast bulk of these intermediates will be destroyed as a natural consequence of combustion, leaving products which consist of primarily CO_2 and H_2O. However, because of the potential toxicity of some of the combustion intermediates, it is essential that they be destroyed as completely as possible. Conditions which favor the formation of intermediates should be avoided. Combustion strategies can be developed around the simple principle of minimizing the emission of all combustion intermediates. The available data on low temperature, catalytic reactions to form PCDDs/PCDFs rely on emission of organics such as phenols from the radiant section of the combustor (Vogg et al., 1987).

The strategy for minimizing the emission of combustion intermediates is based upon a desire to provide an environment which will ensure the destruction of effectively all gaseous organic species. This environment requires the presence of oxygen at a sufficiently high temperature. Furthermore, it is necessary that, to the extent possible, all combustion gases experience the same environment. Thus, mixing is important because it will ensure uniform temperatures and composition. Mixing should be rapid as well as complete in order to maximize residence times for destruction of intermediates. The attainment of the appropriate temperatures will depend upon the balance between heat released and heat absorbed. All of the above will maximize combustion efficiency. Exhaust CO concentration is a good

measure of combustion efficiency because high levels of CO are normally associated with poor air/fuel mixing.

The simplistic view of optimization of combustion by the "three Ts", time, temperature and turbulence, is not directly valid in this context. For example, as will be discussed further in the next section, the gas-phase residence time should not be considered solely as a necessary reaction time but rather as a mixing time. Time is required for air and intermediates to mix but, once mixed at sufficient temperature, the destruction reactions take place virtually instantaneously. There is no need to hold the mixed gases at this temperature for a longer time to destroy trace organics. Further, turbulence on its own is not sufficient to ensure the necessary mixing. Two separate highly-turbulent stream tubes in the furnace will not mix despite their high turbulence level unless they come into contact. Thus, mixing of the furnace gases with air requires that the turbulent air jets be dispersed throughout the combustion gases. Finally, the definition of a mean temperature is inappropriate. The trace species that escape the furnace may experience temperature pathways significantly different from the mean temperature level. Concepts based strictly on mean times above temperatures (such as qualifying maximum volumetric heat release rates) do not treat the low temperature escape mechanisms.

Specific elements of a general combustion strategy can be formulated to minimize the emission of trace organics from municipal waste combustors. These elements must first consider the nature of the combustion process in municipal waste combustion facilities and the practical implications of current systems. There are also several restrictions that must be placed on the operating requirements. These must account for impact on the following:

- Availability of equipment
- Emission of other species such as NO_x and metals
- Economics of waste-to-energy systems

The elements of a combustion control strategy based upon good combustion practices include the following:

- Temperature
- Combustion air (primary and secondary)
- Combustion monitoring
- Automatic combustion control
- Limits on operating conditions
- Verification that operating conditions were adhered to

These elements and the establishment of performance criteria are discussed in the next sections. It should be noted that the following represents an initial attempt to develop such a strategy. It has not been verified and must necessarily be modified as the data base is expanded.

8.3 Temperature

There is a broad distribution of temperatures within a municipal waste combustor that make mean conditions difficult to define. In Figure 8-4 is shown temperature profiles in the Steinmueller mass burn combustor at Stapefeld, for both full load and partial (60 percent) load operation. Mean times at temperature defined by maximum volumetric heat release rates do not characterize conditions in the furnace adequately. Three-dimensional heat transfer, flow and combustion models are generally required to predict, even crudely, the temperatures experienced by the combustion gases. The Steinmueller data indicate that a greater than 200°C (360°F) temperature variation exists across any plane in the mid-portion of the furnace. The typical temperature variation is from 1000°C (1832°F) at near center-line to 800°C (1472°F) near the walls. At low loads the temperatures are generally lower (peak 900°C) and the distribution is skewed due to changes in flow and combustion conditions.

Ensuring that organics such as PCDDs/PCDFs are minimized from municipal waste combustors requires a knowledge of minimum temperature pathways. The formation mechanisms of PCDDs and PCDFs are extremely difficult to define reflecting the complexity of the reactions that occur during the combustion of refuse. The critical step necessary to prevent emissions of the intermediate organics is to ensure that the minimum temperature experienced

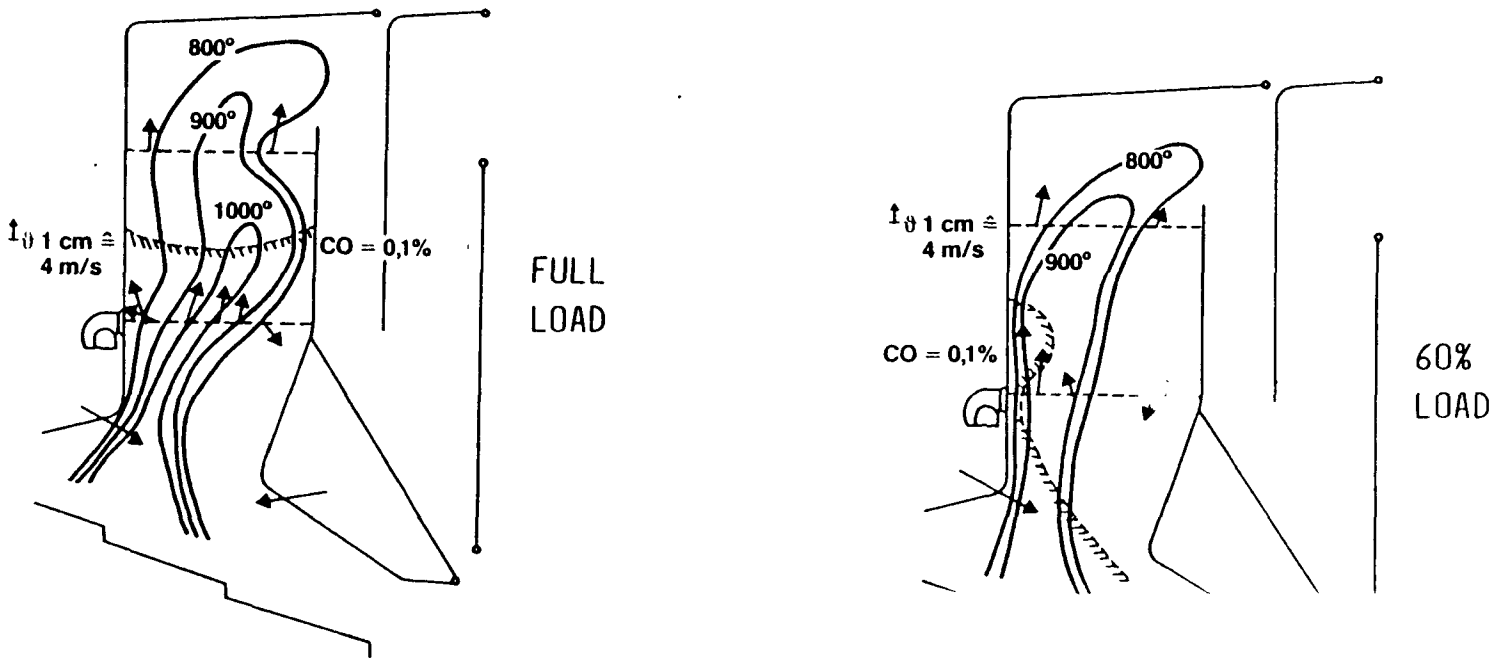

Figure 8-4. Temperature distributions in an operating mass-burn combustor.

by the organics, after they have mixed with oxygen, is sufficient for their rapid destruction. Thus, it is not the mean temperature that must be defined, but the minimum temperature experienced by the combustion gases.

Combustion control of organics requires that the combustion gases are mixed with oxygen. Only in the presence of oxygen are the reactions, which complete the combustion of organics to harmless species such as CO_2 and H_2O, rapid. The requirements for ensuring adequate mixing are therefore at least as important as the temperature criteria. The mixing requirements for combustion air are discussed in the subsequent sections.

Municipal waste combustion systems are generally characterized by defining a mean temperature at some (often arbitrary) location in the radiant section. Using that characterization approach, the mean temperature must be high enough to ensure that the minimum temperature is sufficient to destroy organic species. The location chosen for the characteristic temperature is also important. The current evaluation has selected that location as the "fully mixed height" - the point beyond the final air addition location where complete mixing should have occurred. In mass burn, waterwall designs and RDF fired systems, overfire air jets are used above the grate region to mix air with the gases leaving the burning refuse bed. For most systems, with good engineering practice for overfire jet design, the fully mixed height should be on the order of one meter (or less) above or beyond the last overfire jet. For less traditional systems such as the Westinghouse/O'Connor combustor the fully mixed height might be in the radiant furnace just above the rotary portion interface with the stationary furnace wall (assuming that there is no additional overfire air addition). For the Volund system the fully mixed height would be above the refractory arch after final air injection and after the split flows have merged. For other, non-traditional designs, the location selected for the characteristic temperature should be based on sound engineering analysis.

The mean temperature must be defined which ensures that the minimum temperature at the fully mixed height is sufficient to destroy PCDDs/PCDFs and their precursors. Figure 8-5 is an illustration of the conditions that

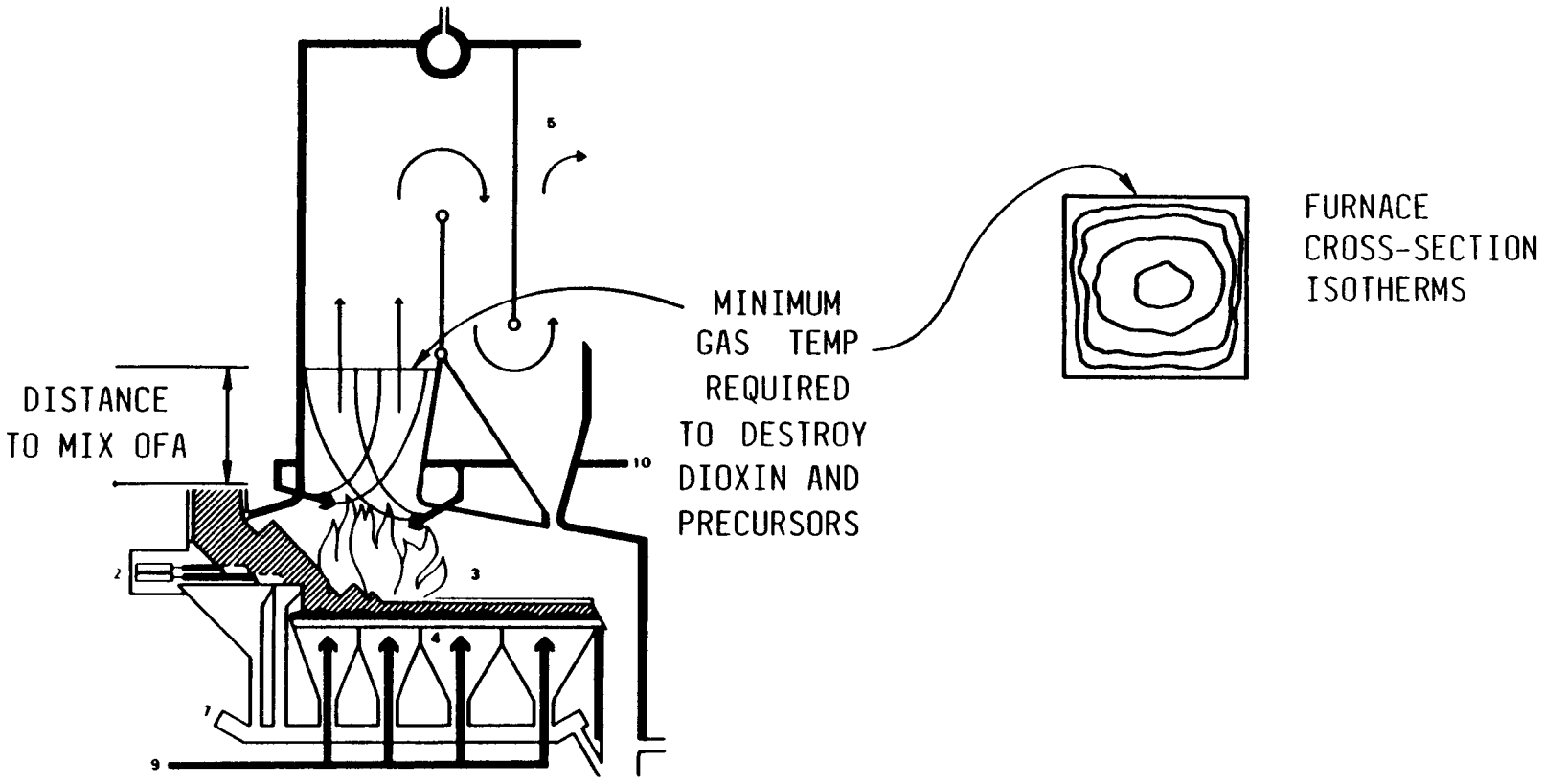

Figure 8-5. Required temperature for destruction of intermediate organics.

exist in a mass burn combustor. At the fully mixed height above the overfire air jets, there is a distribution of temperatures, as shown by the hypothetical cross-sectional isothermals. With good grate and overfire air jet design, the range of temperatures will be kept to a minimum. However, a 200°C temperature variation could still exist at this plane (e.g. see Figure 8-4). Thus, a mean temperature must be selected such that the minimum temperature is greater than the thermal decomposition temperature required to fully destroy intermediate hydrocarbons.

The thermal decomposition data obtained by UDRI (Dellinger, 1982) can be used as the basis for indicating the temperature which will be required to destroy organics. In Figure 8-6 is provided some of the reference data for a range of organic intermediates including PCDDs/PCDFs, benzene and chlorinated hydrocarbons. PCDD/PCDF species are generally unstable above 1300°F although potential precursors such as chlorophenols are stable to 1500°F. Hexachlorobenzene is one of the most stable species; it does not totally decompose below 1650°F although such species (totally chlorinated organics) are unlikely candidates as PCDD and PCDF precursors. A temperature of 1800°F, which is quite often associated with municipal waste combustion requirements is roughly 150°F above the thermal decomposition temperatures of the most stable hydrocarbon intermediates. Thus a mean temperature of 1800°F at the fully mixed height, should be adequate to ensure that the minimum temperature is sufficient to destroy the most thermally stable hydrocarbons at very short residence times. In particular, such a design guideline is adequate for PCDD and PCDF species along with their potential precursors such as chlorophenols.

It is possible to demonstrate the adequacy of a particular design by estimating the mean temperature at the mixed height for the design oxygen levels, the design refuse bed but with clean waterwalls. The use of clean walls is recognized to be conservative since the existence of an ash layer will increase the resistance to heat transfer and therefore raise furnace gas temperatures; however, the characteristics of the layer cannot be defined accurately. Experimental data could be used to establish appropriate values.

UDRI THERMAL STABILITY

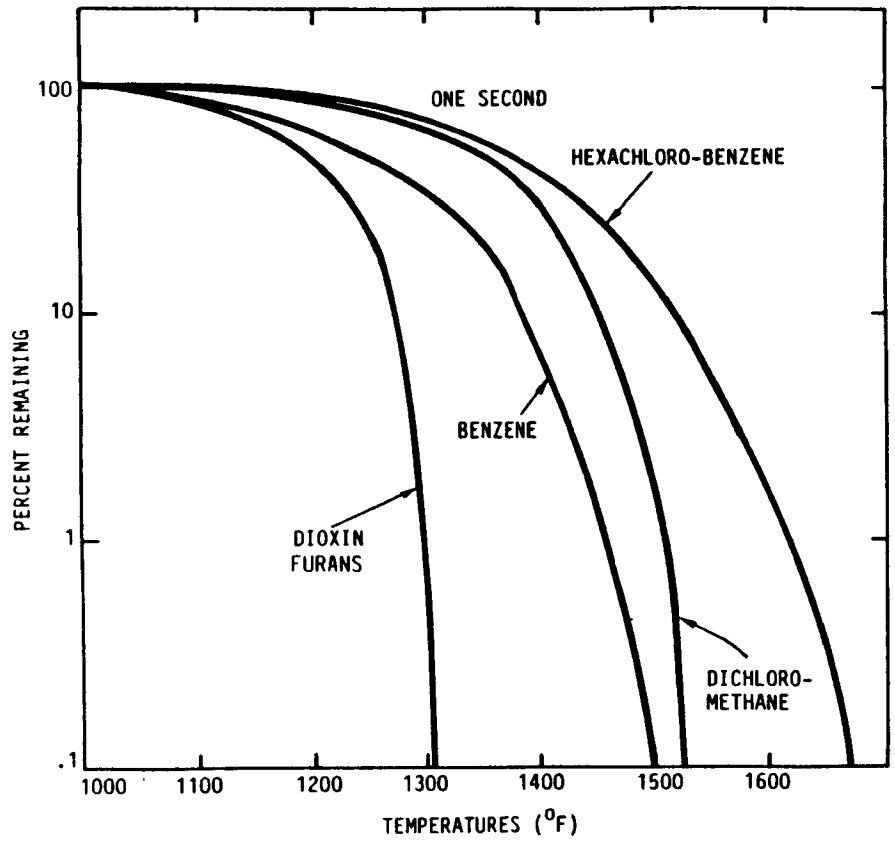

THEORETICAL CALCULATIONS

- FORMATION/DESTRUCTION FROM CHLOROPHENOLS (NBS)

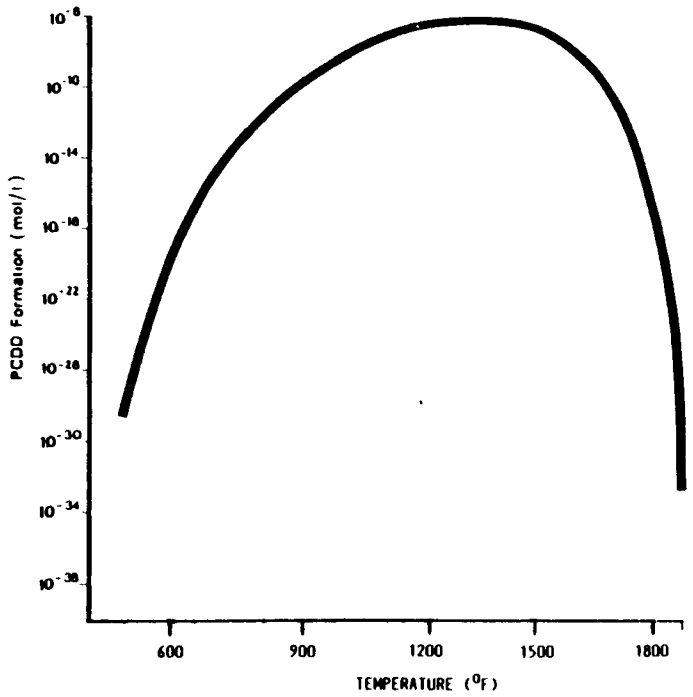

Figure 8-6. Thermal decomposition characteristics of selected hydrocarbons.

8.4 Combustion Air

An excess of combustion air is essential for the complete oxidation of combustible material. Combustion will not be completed, and harmful intermediate species may form and escape the furnace if oxygen is not provided in sufficient quantities at the appropriate location. Four factors concerning combustion air are important; they are as follows:

- The total amount of air
- The distribution of primary air
- The distribution of overfire air
- The verification of appropriate air distribution

Each of these aspects associated with combustion air will be discussed in the following sub-sections.

8.4.1 Total Air Requirements

The first aspect involves the amount of total combustion air which is necessary for complete combustion. There can be both too much, or too little air. With too little air, the furnace will be oxygen-starved either throughout the furnace or in localized zones. The total air flow must be sufficient (1) to ensure that there are no localized zones which are oxygen-deficient and (2) to dampen out surges due to excessively volatile refuse. In other words, there must be sufficient excess oxygen available to dampen out spatial and temporal variations in fuel composition to avoid the possibility of oxygen-deficient zones. On the other hand, too much air can excessively cool the furnace. Adiabatic flame temperatures (see Figure 8-7) are hottest at stoichiometric (zero percent excess oxygen) conditions and fall off with increasing excess air due to the dilution of furnace gases with air that must be heated.

The range of excess air that is appropriate can be established based upon current practice and experience. Mass-burn waterwall systems have been found to operate best with flue gas oxygen levels between 6 and 11 percent.

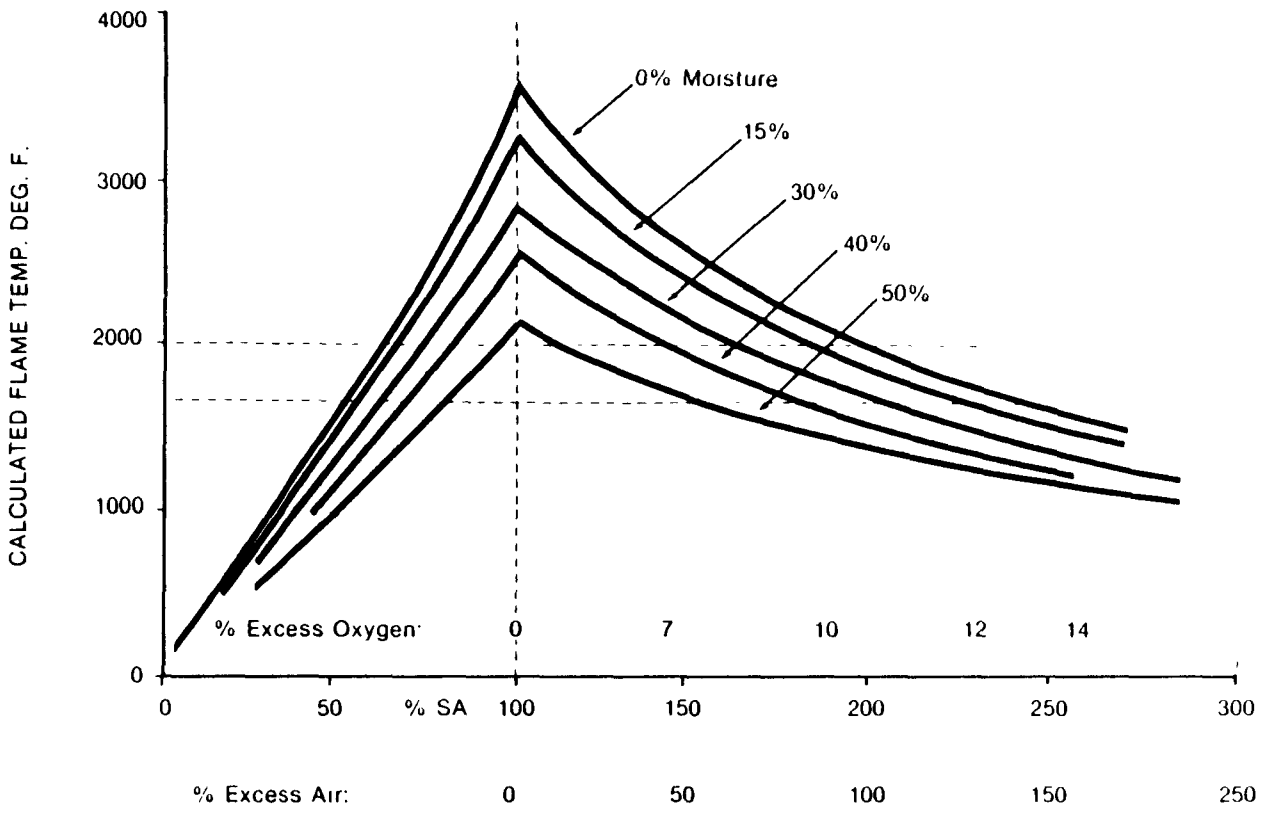

Figure 8-7. Theoretical temperature of the products of combustion, calculated from typical MSW properties, as a function of refuse moisture and excess air or oxygen (8.9).

Operation with less than 6 percent may be acceptable for certain situations such as extremely well- mixed mass burn system. It is reported that the Westinghouse/O'Connor system and the Enercon/Vicon systems operate at lower excess air levels and still achieve relatively low trace organic emissions. Similar levels (6-11 percent) are current practice for small modular two-stage systems. These excess oxygen levels correspond to excess air levels of between 40-100 percent. RDF-fired systems are typically designed to operate at lower excess air levels, taking advantage of the reduced variability in fuel characteristics.

8.4.2 Primary Air Requirements

The second aspect relating to combustion air is the proper distribution of primary or underfire air. For mass-burn and RDF systems, primary air is introduced through the grate and into the bed of burning refuse. For multi-zone systems, the primary air is introduced to the first zone. The key requirement for the primary air system is to get the primary air to the location where burning is taking place in the refuse bed.

For mass burn grate systems, the primary air should be introduced through a number of separately controllable plenums underneath the grate. In current practice, between four and six primary air control regions are employed along the grate in order to have the capability of distributing the air to the active burning zones. A high pressure drop across the grate is desirable to ensure that the bed region supplied by each plenum is completely covered with air and there is minimal bypassing around thicker regions of refuse.

Both the quantity and the distribution of underfire air are important parameters. The quantity of underfire air will directly impact the burning rate of the MSW on the system grate or hearth. Therefore, the quantity of undergrate air - along with grate speed - may be used as a quick response trim parameter for the steam production rate. Over long averaging times, the steaming rate is obviously controlled by the MSW feed rate while the quantity and distribution of undergrate air will 1) control the location of MSW

burnout and 2) the mass averaged excess air of combustion products leaving the lower furnace. Generally, the distribution of underfire air should be such that good carbon burnout is achieved and the main flame is concentrated on the burning grates. Air flows to the drying grates and finishing grates are generally minimized, consistent with moisture content in the fuel and low organic content in the bottom ash.

For RDF fired spreader-stoker units, primary air should be introduced through the traveling grate to correspond to the distribution of RDF. For example, some RDF distributors attempt to spread the refuse uniformly over the grate and thus, the air must be distributed uniformly also. Alternatively, some distributors throw the refuse toward the end of the traveling grate and the refuse is carried to the other end by the grate movement. In this instance, separately-controlled underfire air plenums are necessary to ensure proper primary air distribution. Similar to mass-burn systems, a high pressure drop across the grate may aid in the uniformity of air flow through the refuse bed.

Finally, for smaller multi-stage starved-air combustors, primary air control is not as critical as in larger units. The primary units are small enough that, in general, only the amount of primary air needs to be controlled. Individually controlled underfire air plenums are useful but not necessary. However, uniformity of air flow across the bed is still crucially important and can be accomplished most effectively by high grate pressure drops.

8.4.3 Distribution of Overfire or Secondary Air

The most critical requirement for complete combustion of the unburned material exiting the primary zone is mixing with air before the temperature drops below the level required to destroy the organic intermediates. In almost all current municipal waste combustion designs, secondary air is used to aid the lower furnace mixing. The correct design of the overfire air injection scheme is critical to the prevention of unmixed zones and minimizing the emission of trace organics. With proper overfire air

injection schemes, particle carryover can be reduced, the flame height can be controlled and the furnace gaseous concentrations can be made to be more uniform.

For any combustor type, the overfire air must be introduced in such a way as to cover the entire furnace flow. Only with complete coverage of the flow can the adequate mixing of the furnace gases be ensured. Mixing is a function of how well the injected overfire air contacts the gases rising from the burning refuse bed. In order for "good" mixing to occur, the overfire air jets must penetrate into the gas flow at well distributed locations and they must entrain as much of the furnace gases as possible within a short distance downstream from the injection location. For mass burn systems, the normal overfire air configuration involves rows of high velocity air jets on the front and rear walls. Table 8-1 and Figure 8-8 provide a summary of typical overfire air jet designs for large mass-burn systems as provided by manufacturers for new systems. The configurations all use front and rear walls and multiple high velocity jets to completely cover the furnace flow. Refuse-derived-fuel-fired spreader stoker designs also employ overfire air jets to completely cover the furnace flow. For example, Detroit Stoker systems have OFA jets on all four walls below the height of the fuel distributor while Combustion Engineering designs use tangentially-directed high velocity jets above the distributor level. Again, the intent is to achieve complete coverage of the flow with penetrating high velocity jets.

Current designs of small multistage mass-burn systems and water cooled rotary combustion units also use overfire air to mix the furnace gases. Again, the design and operating goal is to achieve flow coverage and penetration. However, different overfire air injection schemes can be used because of different furnace configurations and smaller dimensions. Many of these systems employ duct injectors which achieve the coverage and penetration by injecting air at high velocities into the flow or from the center line through smaller multiple holes.

TABLE 8-1. OVERFIRE AIR JET CONFIGURATIONS FOR LARGE MASS BURN INCINERATORS

Manufacturers	OFA % of Total Air	OFA Configuration	Jet Velocity and Configuration
Deutsche Babcock (Browning Ferris)	20 - 25	Rows on Front and Rear Walls Side Wall Aspiration	100 m/sec 70% penetration
Steinmueller	40	Rows on Front and Rear Walls at Nose	80 m/sec 600 mm w.g. 80 mm dia.
Von Roll (Signal Resco)	30	Rows on Front and Rear Walls at Nose	50 m/sec 50 mm dia. 1 m separation
Widmer & Ernst (Blount)	30	Front and Rear Walls Interlaced Offset Vortex	80 m/sec 70 mm dia.
Martin (Ogden Martin)	20 - 40	Front and Rear Walls Offset	50 - 100 mm dia. 450 mm w.g.
Detroit Stoker	40	2 Rows Each on Front and Rear Walls	(Data Not Available)
Riley Takuma	30 - 40	Rows on Front and Rear Walls at 3 Levels	(Data Not Available)
Combustion Engineering-db	20	1 Row Front Wall 2 Rows Rear Wall	High Velocity 750 mm w.g.
Volund	40 - 50	1 Row Side Walls Perforated Ceramic Plates-Side Walls 1 Row Back Wall Controlled Air at Feed and Exit of Rotary Kiln	Varies

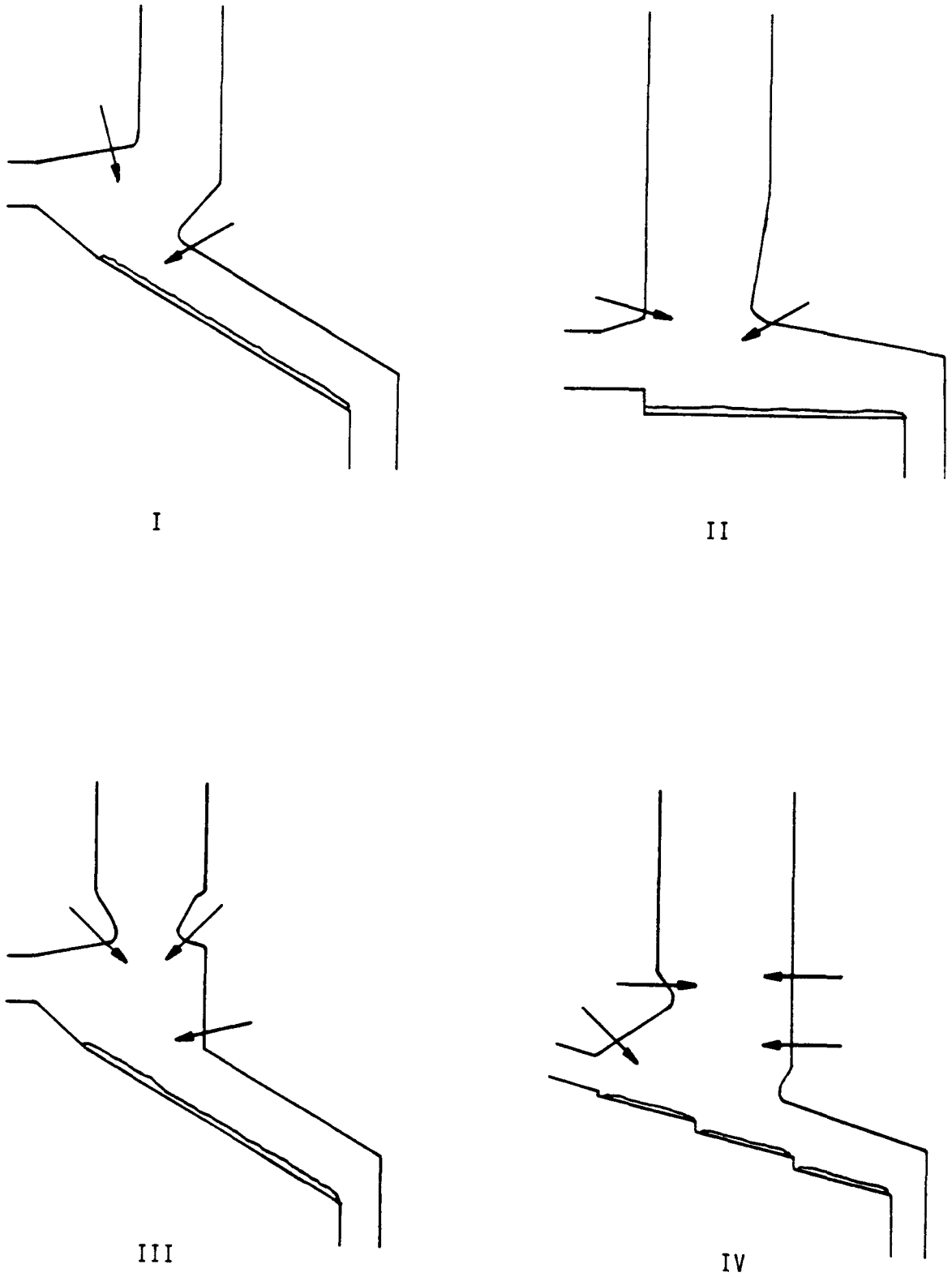

Figure 8-8. Typical designs of overfire air systems.

The need for secondary air to completely cover and penetrate the flow implies a number of considerations for the design and operation of the injectors. The injector parameters of importance include the following:

- Quantity of overfire air
- Number and location of injectors
- Injector velocity
- Injector spacing
- Injection angle
- Injector shape
- Air supply pressure drop

These parameters are related to each other and to the design of the furnace configuration. The optimum overfire jet configuration would involve numerous high-velocity jets with correspondingly high pressure drops. However, the pumping energy requirements (as indicated by the pressure drop and quantity of air) may become excessive and the auxiliary power requirements will be too high. Thus, good engineering practice involves achieving penetration and coverage with minimal pumping energy (i.e. low pressure drop). Since the design of the overfire air system may not be exact, it is appropriate to allow for a range of air flow, velocity and potentially even jet direction in initial hardware design. This would permit on-line optimization to take place. The overfire air design must be tailored to the overall furnace design and operation.

Quantity of Secondary Air

The amount of overfire or secondary air is vitally important. For a given steam production rate and overall excess air level, the quantity of air available as overfire air must be balanced with the amount of air used as underfire air. With too little overfire air, the mixing cannot be achieved since insufficient momentum is available to achieve cross stream mixing. On the other hand, excessive overfire air can result in thermal quenching due to the introduction of too much cold air. Current practice has established 20-40 percent of the total air as overfire air as appropriate. Extensive

testing using cold-flow modeling in-furnace sampling, and emissions testing (especially on mass-burn systems) have verified the suitability of these values. Thus, it appears that the design of overfire air supply with 40 percent of total air capacity and ensuring that the system is operated with at least 20 percent overfire air is appropriate to minimize emissions of trace organic species.

Injector Diameter and Velocity

The diameter of the overfire air injectors and the initial jet velocity can be determined based on the required quantity of overfire air and the furnace configuration. Design procedures exist to determine jet penetration depths and trajectories. The appropriate design goals would include:

- The trajectory of the jet should cross the centerline of the furnace duct before reaching two injector diameters downstream.

- The depth of penetration of the jet should be at least 90 percent of the furnace depth (in opposed wall or centerline injectors the penetration should reach 45 percent of the depth).

Demonstration that the appropriate jet diameter and velocity has been selected can be based on either design equations or other data such as cold-flow modeling or furnace flow measurement data.

Number of Injectors and Location

Once the velocity and diameter of OFA injectors have been determined to achieve appropriate furnace flow penetration, the number and location of nozzles must be examined to ensure adequate flow coverage. The number of nozzles is of course related to the quantity of air available for use as overfire air. There are a number of appropriate configurations that would be acceptable for achieving the coverage depending upon the furnace configuration. However, a cross-sectional view of the furnace showing the

location of injectors is generally sufficient to illustrate the coverage of the furnace flow.

Air Pressure

The pressure of overfire air supply, ΔP, is related to the jet velocity, V by:

$$V(ft/sec) = 66.3\sqrt{\left(\frac{T(^{o}F) + 460}{520}\right)\Delta P \text{ (in w.g.)}}$$

where T is the temperature of overfire air. No friction losses are accounted for in this equation, thus actual jet velocities will be 7-10 percent lower than predicted by the above equation.

8.4.4 Verification of Appropriate Air Distribution

The appropriate design of an municipal waste combustor will allow control of the various combustion air streams and will be sufficiently flexible to allow the air to be distributed to the burning zones. The current report has attempted to underline the fact that an MSW or RDF combustor is a combustion system and that the various subsystems must be carefully integrated. Recognizing these systems aspects, an important question arises as to how appropriate adjustment of the subsystems can be verified. Current practice involves use of a variety of indicators including:

- Visual inspection
- Exhaust concentration measurements and
- In-furnace probing/mapping experiments.

The use of visual inspection is often extremely effective in adjusting air flow distribution (at least coarse distribution). Such visual inspection can be used to guide adjustment of underfire air distribution among the various plenums beneath the grate sections. Exhaust concentrations of oxygen, and CO

coupled with visual observation of the flame can be used to adjust overfire air quantity and distribution. Clearly, experimental verification that there are acceptably low exhaust concentrations of the spectrum of PCDDs/PCDFs is proof that the combustor is sufficiently adjusted. To achieve that acceptable emission level (a level yet to be defined) almost certainly implies that an appropriate quantity of overfire has been injected and mixed with the effluent from the lower furnace. A number of combustion system designers including Steinmueller/Dravo, Martin Systems and Von Roll have used in-furnace profiling of CO concentration to develop their overfire air injection scheme and to establish an appropriate air flow distribution in particular furnaces. The rationale is that CO concentration is a direct indication of furnace mixing and that peaks in concentration of CO at the fully mixed height are indicators of poor air distribution. Figure 8-4 illustrate a relatively flat CO concentration profile at full load and a highly skewed in-furnace CO profile at 60 percent load.

In establishing a new MSW system a combination of the above verifications is required. Visually guided adjustments and exhaust gas measurements are essential components. In-furnace CO profiling may not be necessary for every new unit but is strongly suggested as a diagnostic tool but it is strongly suggested as a diagnostic tool for correcting air distribution in facilities which do not achieve sufficiently low trace organic emission.

If in-furnace profiling is to be performed the CO measurements must be taken over the entire measurement plane with sufficient spatial resolution to cover the entire furnace flow. Twenty-five to fifty sampling locations should be adequate and a variation in CO concentration greater than 50 percent (e.g. from 1 percent to 1.5 percent when corrected to the same oxygen concentration level) may be indicative of the need to adjust air flows, although it is essential that this criteria be established more precisely by extensive field testing and engineering analysis. Despite the current lack of precision in this technique, CO concentration profiling can provide an indication of combustion uniformity.

8.5 Combustion Monitoring Requirements

In the previous sections, the goals for design and operation were discussed which would be consistent with proper combustion system operation. In addition to these requirements, the system must be monitored continuously and controlled so that the system functions in the proper operating mode. In other words, continuous monitoring and control is required to help prevent a failure condition. This is particularly challenging when burning the ever-changing supply of refuse which has a relatively low fuel value. Fluctuations in the volatile and moisture content of the refuse must be accounted for properly if the design is to be implemented correctly in practice. If the system is designed properly and tuned accordingly, then the monitoring and control system must only ensure that this system remains within the proper operating envelope.

Three continuous monitoring schemes may be used to ensure that the system stays in compliance. These include the following:

- Minimum flue gas carbon monoxide concentration (corrected for O_2 concentration)
- Minimum and maximum level of flue gas oxygen concentration
- Minimum furnace temperature

These monitoring variables, on their own, are not sufficient to ensure the system is not emitting PCDDs/PCDFs. In particular, they do not provide information on the degree of uniformity within the furnace. This is crucially important to ensuring destruction of intermediates. For example, low exhaust mean carbon monoxide levels are indicative of the mean conditions, not the isolated pathways which could lead to part per trillion emissions of PCDD/PCDF species. On the other hand, once the system has been proven to have well-mixed conditions by in-furnace profiling or by other means, then flue gas CO levels might be used to indicate that no significant

change has taken place. Field measurements are required to establish the effectiveness of this type of monitoring.

The levels of these monitoring parameters must be specified along with appropriate averaging periods. Discussions with manufacturers of new MSW combustion equipment have provided an indication of the currently achievable level of control and the appropriate target. Currently, many of the manufacturers already use some or all of these measurements for monitoring and control. For carbon monoxide, it was generally agreed that 100 ppm (corrected to 12 percent CO_2) was achievable and appropriate. Many systems regularly achieve continuous CO levels in the range of 20-40 ppm. However, even well-behaved systems can have momentary spikes in CO that can exceed 100 ppm. These momentary spikes due, for example, to a small burst of volatiles are not necessarily of concern since a well-designed system will dampen out surges and destroy intermediates. Also, field and laboratory measurements have suggested that CO is a conservative indicator of failure. However, if this CO excursion is too high, or if it persists, then corrective action must be taken.

Recent data from mass burn systems have shown that well designed and operated units can achieve low PCDD/PCDF levels from the combustion zone. For example, the new units at Marion County, Tulsa and Wurzberg and the modified older design, Von Roll facility at Quebec City, were found to have low PCDD/PCDF and other trace organic emissions over a four hour average (sampling time). These same units were found to have a rolling average exhaust CO levels of less than 50 ppm over the same averaging period. Thus, this level of CO is proven to be acceptable and achieveable with modern design and operating practice.

It has been pointed out that the total combustion air flow should not be too high or too low if the emission of trace organic species is to be minimized. Current practice has recommended that an exhaust O_2 range of between 6 and 12 percent is appropriate. When the proper excess air level has been established for a particular unit, then the control system should operate within a more restrictive range. However, for major corrective

action such as a system shutdown, it is appropriate to establish levels outside the 6 to 12 percent range.

Gas phase furnace temperature monitoring is required to ensure no low-temperature excursions occur. Measurements in the furnace above the fully mixed height using suction pyrometry to shield radiation can indicate that the system is being continuously operated in the same thermal environment. In conjunction with other design and operating procedures which ensure uniformity, this measurement prevents thermal failure modes. The most desirable locations are low in the furnace but pyrometer survivability is low in this region. For this reason an upper furnace location which is related to the fully mixed height temperature of 1800°F is a reasonable compromise. Simultaneous measurement at both locations during tune-up would allow the upper appropriate furnace temperature requirements to be defined.

8.6 System Control

The final element of a strategy to minimize emissions of trace organics is the control of the combustion system relating to the combustion process. A control system is required in order to maintain a desired steaming rate with changing refuse characteristics. The control schemes used by the various manufacturers are described in Section 5. Many of the new systems use multiple loop automatic control schemes which change refuse charging rates, grate feed rates, underfire and overfire air flows in response to changes in steam pressure and other monitoring variables such as flue gas oxygen or furnace temperature. The key goal of these automatic control systems is to avoid failure modes while maintaining steaming rate. For example, one notable failure discussed in Section 8.1 is the closure of underfire air flows during a steam excursion which drives the system to an oxygen-starved condition. Such control system flaws can be prevented by monitoring other variables such as flue gas oxygen.

In addition to maintenance of steam pressure, the other aspect of control is the system response to excursions in monitored parameters. Specifically, one possible response to a CO excursion or for low temperatures

is to initiate auxiliary fuel combustion via an auxiliary burner. These auxiliary burners should burn a clean fossil fuel such as natural gas or light fuel oil with sufficient capacity to dampen out rapidly the results of the excursion. In this manner the inventory of refuse that remains in the furnace at the start of the excursion will be burned under appropriate conditions. A complete halt to refuse feeding should not be necessary unless the excursion persists. However, the feed rate would have to be reduced so that the steam rate noes not exceed the desired level.

The other need for auxiliary fuel is for startup. As previously mentioned, low temperature has been specifically identified as a failure mode. To avoid this failure mode on startup, auxiliary fuel should be used to raise the furnace temperature to the operating point before waste is added. The capacity of the auxiliary fuel system should be consistent with these needs; current practice suggests that capacity equal to 60 percent of the heat input is appropriate.

Finally, low load operation is of concern because the combustion conditions may deteriorate as the firing rate is reduced. Lower firing rates may result in lower temperatures and poorer mixing due to slower overfire air injection velocities and lower combustion intensity. A specific load level below which performance is unacceptable has not been established, and is most likely system-specific. In fact, special design and operating procedures can be developed to extend the range of operation for any particular system. For example, steam jets might be used to supplement overfire air jets during low load operation. Most manufacturers expressed preference for operating above 80 percent but below 110 percent rated capacity. If lower load operation is desired, then additional testing such as in-furnace CO profiling, temperature profiling or stack emission testing to verify low exhaust organics concentration at the lowest firing rate may be appropriate.

8.7 Minimization of Hydrocarbon Species and Other Pollutants

The previous sections have described a strategy for the design and operation of municipal waste combustors to minimize the emission of trace

organics. There is concern that its implementation could result in higher emissions of other pollutants. In particular, the impact on emission of acids, particulate matter, NO_x and metals must be evaluated. It is expected that there will be little or no impact on emission of acids and particulate matter but there may be adverse impacts on NO_x and metals emissions.

The design and operating techniques for minimizing organic emissions is not compatible with combustion-zone NO_x emission control. High-temperature, well-mixed excess air conditions favor the formation of NO_x from both thermal fixation of molecular nitrogen and the conversion of fuel nitrogen. The tradeoff between NO_x and CO has been observed for some time for large furnaces where optimum conditions for CO are not compatible with combustion control of NO_x. A similar tradeoff exists between NO_x and hydrocarbons. However, NO_x can be controlled through post-combustion controls, as discussed in Chapter 4.

Combustion modification techniques such as air staging and flue gas recirculation which are designed to moderate flame temperatures have been shown to be effective for NO_x control. For example, Volund Technology employs flue gas recirculation in its refractory-lined combustors to control NO_x by lowering the primary zone temperature. However, it is presently unclear whether such control strategies can be applied universally or will be compatible with control strategies for hydrocarbons. An alternative to combustion modification are downstream processes which would not interfere with optimizing the combustion zone for control of organic pollutants. NH_3 injection above the combustion zone is currently being installed on new systems in California (e.g. City of Commerce). Other NO_x control strategies that potentially could be applied include reburning which may also aid in hydrocarbon control and selective catalytic reduction. More research is required to define the impact of combustion control techniques for hydrocarbon control on NO_x and NO_x control strategies.

The emission of heavy metals may also be adversely impacted by design and operating practices for hydrocarbon control. The partitioning of metals between residuals, fly ash and condensible fume depends strongly on the

temperature and stoichiometry that the metal bearing refuse experiences in the burning refuse bed. Data was presented earlier which indicates that higher temperatures favor vaporization of metals and that stoichiometry impacts the condensible fraction. Hence, changes in temperature to higher values and modification of the air distribution might impact metal fume emissions adversely. The magnitude of these effects has not been established. Post-combustion flue gas cleaning may be used to reduce levels of metals emissions, as discussed in MWC study entitled "Flue Gas Cleaning Technology."

8.8 References

Dellinger, B. et al., "Laboratory Determination of High Temperature Decomposition Behavior of Industrial Organic Materials". Proceedings of 75th APCA Annual Meeting, New Orleans, 1987.

Haile, C. L., Blair and Stanley. "Emissions of PCDD and PCDF from a Resource Recovery Municipal Incinerator." USEPA/RTP, 1983.

Haile, Blair, Lucas and Walker. "Assessment of Emissions of Specific Compounds from a Resource Recovery Municipal Refuse Incinerator." Washington, D.C.: USEPA, Office of Pesticides and Toxic Substances, May 1984.

Hasselriis, F. "Minimizing Trace Organic Emissions from Combustion of MWS by Use of Carbon Monoxide Monitors." Proceedings of the Twelfth Biennial Conference, 1986 National Waste Processing Conference. ASME, New York, N.Y., p. 129, 1986.

La Fond, R. K., J. C. Kramlich, W. R. Seeker, and G. S. Samuelsen: Evaluation of Continuous Performance Monitoring Techniques for Hazardous Waste Incinerators, Jrnl. Air Pollut. Control Assoc. 35, 658 (1985)

9.0 HYDROCARBON CONTROL STRATEGY - SUMMARY

The previously presented information about municipal waste combustion points to the conclusion that good combustion engineering practices will minimize the emission of trace organic pollutants from the combustor/boiler subsystem of a waste-to-energy system. Not only will these practices minimize emissions, they will also contribute to the operability of the plant because they will reduce corrosion rates and could improve combustion efficiency. In addition, air pollution control devices may reduce trace organic emission levels even lower (see the volume entitled "Flue Gas Cleaning Technology."

This report has synthesized what are referred to as "good combustion practices" from: current theories on the basic mechanisms of PCDD/PCDF formation and destruction in combustion systems, information provided by manufacturers on the design of waste-to-energy systems, and operating/emissions data from specific plants. The practices are designed:

1. To limit the formation of hydrocarbons

2. To maximize the destruction of these same compounds and their precursors prior to the exit of the combustor/boiler should they be formed

As such, good combustion practice attempts to preclude conditions which promote formation of PCDDs/PCDFs and their precursors and to ensure that the environment experienced by the gaseous products of waste combustion will destroy both PCDDs/PCDFs and their precursors if those compounds have been formed. These conditions are:

- Mixing of fuel and air to prevent the existence of long-lived fuel-rich pockets of combustion products

- Sufficiently high temperatures in the presence of oxygen for the destruction of hydrocarbon species

- Prevention of quench zones or low temperature pathways that would allow partially-reacted fuel (solid or gaseous) from exiting the combustion chamber

The appropriate design of a waste-to-energy system alone is not sufficient to ensure that the optimum combustion environment will exist in practice. The combustion system must also be operated continually in an appropriate manner and respond properly to changes in refuse combustion characteristics in order to maintain proper conditions. Only by examining all aspects of design and operation of these systems can the emissions of trace organics be minimized.

This final section of the report will review these elements and indicate the integration of the elements into a combustion control strategy for trace organics such as PCDDs and PCDFs. Finally, the remaining uncertainties and issues will be identified along with recommendations on research approaches to address them.

9.1 Combustion Practices for Trace Hydrocarbon Emission Control of Municipal Waste Combustors

Currently, there are no definitive data on the mechanism of formation or destruction of PCDD/PCDF in municipal waste combustion facilities. The available data indicates, however, that trace quantities of PCDD and PCDF species can be formed in the process of burning heterogeneous fuels such as MSW. Several theories propose that PCDD/PCDF form more easily from certain similar structure precursors such as chlorophenols and some species in lignin which are either present in the feed or are themselves formed during the combustion process. However, once formed, both the PCDD/PCDF and their precursors can be destroyed if exposed to the appropriate conditions. The intent of good combustion design practices for municipal waste combustors is not only to minimize the formation of PCDD/PCDF or their precursors but also to ensure that escape of precursors from the combustion zone is minimized because conditions might exist downstream which will allow these precursors to form PCDD/PCDF (e.g. by fly ash-catalyzed reactions). The appropriate

conditions for the destruction of PCDD/PCDF and their precursors are that the species experience a given temperature after being mixed with sufficient oxygen. The challenge for the designer is that no pocket of material can escape the system which has not experienced these conditions.

The development of "good combustion practices" to minimize emissions of hydrocarbons from municipal waste combustors involves three separate elements:

- Design. Design the system to satisfy several criteria which will ensure that temperatures and the degree of mixing within the combustor are consistent with minimizing formation and maximizing destruction of the trace organics of concern.

- Operation Control. Operate the system in a manner which is consistent with the design goal and provide facility controls which prevent operation outside on established operating envelope.

- Verification. Monitor to ensure that the system is continually operated in accordance with the design goals.

If all three of these elements are satisfied, then the emission of trace organics from the combustor of a municipal waste combustors should be minimized.

This project has identified the components of each of these elements which make up good combustion practices, and that are expected to be important in the control of PCDD/PCDF emissions from municipal waste combustors. In addition, preliminary recommendations have been made on the values of the individual components. Identification of the elements was based upon the current design practices associated with combustion systems that have generally shown low PCDD/PCDF emissions. The combustion control elements and preliminary component value recommendations are summarized in Table 9-1, 9-2, and 9-3 for mass burn combustors, RDF-fired systems, and starved-air combustors, respectively.

TABLE 9-1. GOOD COMBUSTION PRACTICES FOR MINIMIZING TRACE ORGANIC EMISSIONS FROM MASS BURN MUNICIPAL WASTE COMBUSTORS

Element	Component	Recommmendations
Design	Temperature at fully mixed height	1800°F at fully mixed height
	Underfire air control	At least 4 separately adjustable plenums. One each under the drying and burnout zones and at least two separately adjustable plenums under the burning zone
	Overfire air capacity (not an operating requirement)	40% of total air
	Overfire air injector design	That required for penetration and coverage of furnace cross-section
	Auxiliary fuel capacity	That required to meet start-up temperature and 1800°F criteria under part-load operations
Operation/ Control	Excess air	6-12% oxygen in flue gas (dry basis)
	Turndown restrictions	80-110% of design - lower limit may be extended with verification tests
	Start-up procedures	On auxiliary fuel to design temperature
	Use of auxiliary fuel	On prolonged high CO or low furnace temperature
Verification	Oxygen in flue gas	6-12% dry basis
	CO in flue gas	50 ppm on 4 hour average - corrected to 12% CO_2
	Furnace temperature	Minimum of 1800°F (mean) at fully mixed height across furnace
	Adequate air distribution	Verification Tests (see text Chapter 8 and 9)

TABLE 9-2. GOOD COMBUSTION PRACTICES FOR MINIMIZING TRACE ORGANIC EMISSIONS FROM RDF COMBUSTORS

Element	Component	Recommmendations
Design	Temperature at fully mixed height	1800°F at fully mixed height
	Underfire air control	As required to provide uniform bed burning stoichiometry (see text)
	Overfire air capacity (not necessary operation)	40% of total air
	Overfire air injector design	That required for penetration and coverage of furnace cross-section
	Auxiliary fuel capacity	That required to meet start-up temperature and 1800°F criteria under part-load operations
Operation/ Control	Excess air	3-9% oxygen in flue gas (dry basis)
	Turndown restrictions	80-110% of design - lower limit may be extended with verification tests
	Start-up procedures	On auxiliary fuel to design temperature
	Use of auxiliary fuel	On prolonged high CO or low furnace temperature
Verification	Oxygen in flue gas	3-9% dry basis
	CO in flue gas	50 ppm on 4 hour average - corrected to 12% CO_2
	Furnace temperature	Minimum of 1800°F (mean) at fully mixed height
	Adequate air distribution	Verification Tests (see text Chapter 8 and 9)

TABLE 9-3. GOOD COMBUSTION PRACTICES FOR MINIMIZING TRACE ORGANIC EMISSIONS FROM STARVED-AIR COMBUSTORS

Element	Component	Recommmendations
Design	Temperature at fully mixed height	1800°F at fully mixed height
	Overfire air capacity	80 percent of total air
	Overfire air injector design	That required for penetration and coverage of furnace cross-section
	Auxiliary fuel capacity	That required to meet start-up temperature and 1800°F criteria under part-load conditions
Operation/ Control	Excess air	6-12% oxygen in flue gas (dry basis)
	Turndown restrictions	80-110% of design - lower limit may be extended with verification tests
	Start-up procedures	On auxiliary fuel to design temperature
	Use of auxiliary fuel	On prolonged high CO or low furnace temperature
Verification	Oxygen in flue gas	6-12% dry basis
	CO in flue gas	50 ppm on 4 hour average - corrected to 12% CO_2
	Furnace temperature	Minimum of 1800°F at fully mixed plane (in secondary chamber)
	Adequate air distribution	Verification Tests (see text Chapter 8 and 9)

It must be emphasized that the values presented in these tables are preliminary targets and require verification to ensure their appropriateness. As such, they can be viewed as an initial basis for developing test plans for field evaluation and pilot-scale R&D studies. Further study may also determine that some of the elements are more important than others in ensuring good combustion.

As with any general principles, the specific design of individual systems must be considered in applying the recommendations in these tables. In particular, several combustion systems, such as the mass burn refractory technologies of Volund and Enercon/Vicon and the mass burn rotary technology of Westinghouse/O'Connor, incorporate differences from the typical mass-burn approach that make it infeasible to directly apply some of the recommendations in Table 9-1. For such systems, parameters such as "fully mixed height" will have to be defined based on technology-specific engineering analysis rather than on the general one meter rule suggested for traditional mass burn systems.

Of course, the final determinant of the performance of each system is the measured level of trace organics emitted from the system. Whether these levels indicate acceptable performance will depend on emission levels established in the facility's permits, state standards or guidance, and any federal guidance or regulation that may be established in the future. If emission measurements indicate that the performance of a system needs improvement, in-furnace CO profiling can be used to determine appropriate adjustments to the air distribution. Specifically, a flat in-furnace CO concentration indicates sufficient air adjustment and furnace mixing. A precise definition of "flat" considering spatial and temporal variations is not yet available and should be developed as part of future test programs.

9.2 Research Recommendations

The "good combustion practices" defined above were derived from an analysis of the available information which includes little direct evidence relating to the appropriateness of values recommended in Tables 9-1, 9-2, and

9-3. Further work is needed to better define and verify these details for control of hydrocarbon pollutants. This work is required in three major areas:

1. Definition and verification of target components and levels

2. Mechanisms of PCDD/PCDF formation and destruction from MSW and RDF fired systems

3. Tradeoffs with control of other pollutants

Figure 9-1 summarizes the flow of information required to establish more specific design and operating recommendations for municipal waste combustors to minimize the emission of trace organic species. This report has used an existing data base to define "good combustion practices" for municipal waste combustors. In order to define these practices more specifically, better (more comprehensive) field data must be obtained, our understanding of the mechanisms of formation and destruction of the species of interest must be broadened, and the tradeoffs with other pollutants must be established. Furthermore, since it is not possible to test all municipal waste combustors, some generalization procedure must be available to extrapolate the data that is collected on operating combustors to the total population.

9.2.1 Combustion Control Guideline Definition and Verification

There is little information relating directly the emissions of the pollutants of concern with the design and operational parameters of municipal waste combustors. Thus, the definition of "good combustion practices" must be considered preliminary and further definition and verification is essential. The approach recommended is to examine directly the impact of design and operating conditions on PCDD/PCDF emissions while monitoring key performance parameters and other pollutant emissions from representative municipal waste combustors operating under a wide range of operating conditions. To establish the required data base these conditions should include testing beyond the normal systems operating envelope.

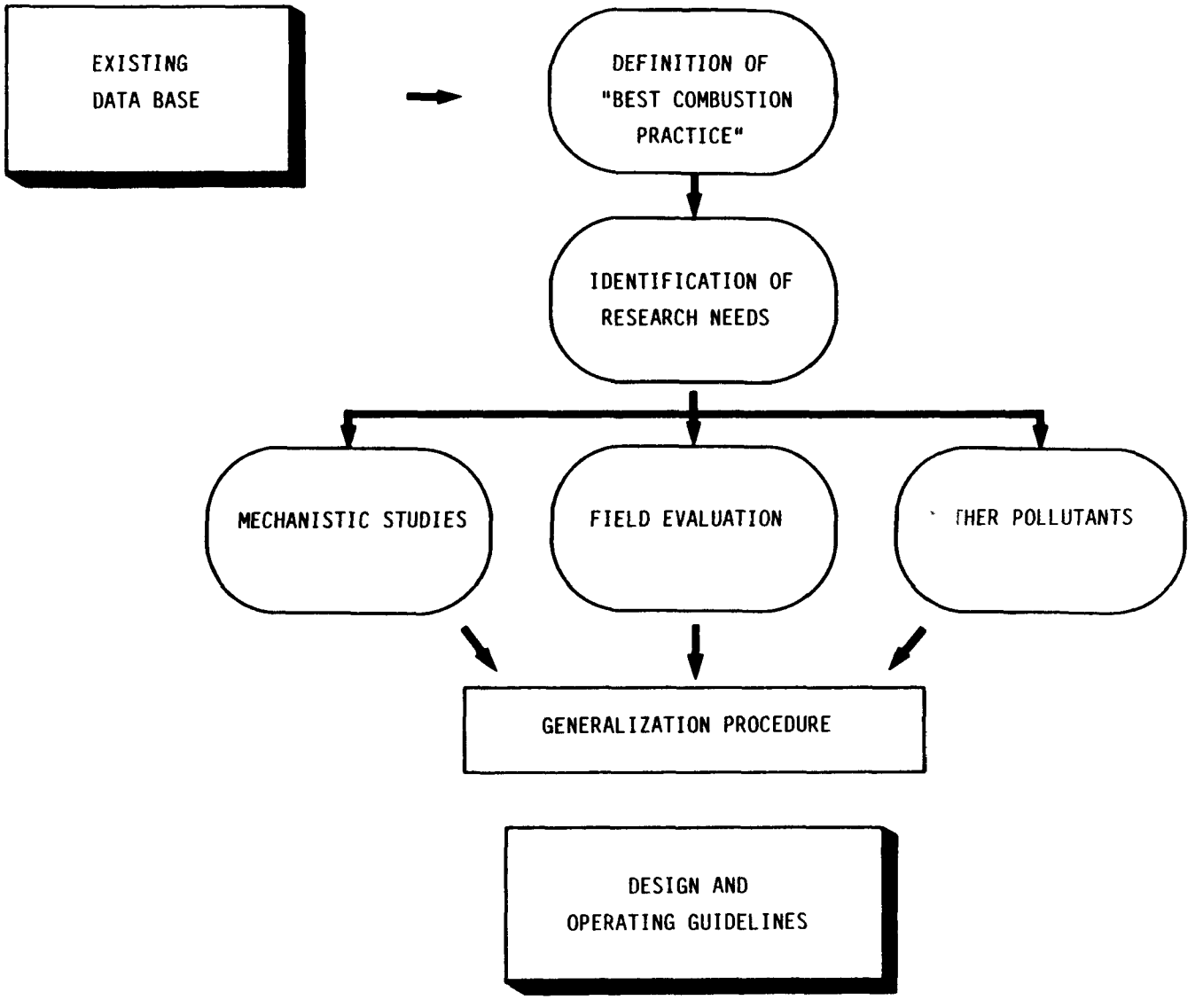

Figure 9-1. Research program to establish design guidelines based upon "Good Combustion Practice".

The tests on operating combustors should be run on units which are representative of new combustion systems i.e. mass-burn waterwall, RDF-spreader stoker, two-staged/starved-air, RDF fluidized bed. The selection criteria for the units to be tested are as follows:

- Representative of the units within a particular combustion system class
- Capable of flexible operation in order to generate the information on cause and effect
- Availability of engineering design and operating data to help data interpretation
- Availability of in-furnace and stack sampling access
- Willingness of owner/operator to participate in a program of this type

The focus of these field tests would be to determine the effect of design and operation on both the emissions of PCDD/PCDF and other pollutants. In addition, it will be necessary to establish the in-furnace conditions (e.g. CO profile) which lead to high and low emissions of PCDD/PCDF. Test series should define the baseline conditions, and the impact of furnace load, combustion air distribution, firing auxiliary fuel, excess air levels, startup procedures and, if possible, fuel type. Field tests are expensive and their utility will be expanded if procedures are available for on line evaluation of combustion performance factors. Measurements will not be possible over the total operating range. Spatial and temporal fluctuations may make the data difficult to interpret. Thus, it is essential that engineering analysis tools be available to interpret and rationalize the data.

9.2.2 Mechanisms of PCDD/PCDF Formation and Destruction

The combustion control strategy would be more valid if it were based upon a better knowledge of the factors controlling the formation and destruction of PCDD/PCDF. Several chemical mechanisms have been proposed (see Chapter 4) but many fundamental physical/chemical issues remain that should be addressed before a controlling mechanism can be accepted. These issues include the following:

- Identify conditions which favor formation of PCDD/PCDF from refuse combustion
- Define the impact of refuse properties on PCDD/PCDF formation
- Define the temperature necessary to destroy PCDD/PCDF species as a function of gas-phase environment
- Examine the role of downstream condensation and formation mechanisms

Both laboratory scale gas phase kinetics studies and bench scale refuse burning studies would be suitable for addressing these issues.

9.2.3 Tradeoffs in Other Pollutants

As indicated in Chapter 4, the combustion control strategy for PCDD/PCDF may have detrimental impacts on other pollutants. For example, maximizing temperature and improving mixing may promote NO_x formation. Also, improving the air distribution can change conditions in the burning refuse bed which can impact the vaporization of heavy metals. These changes could result in the concentration metals in the small particulate fume that is not easily controlled by air pollution control devices.

For heavy metals, the key issue is the fate of metals in the refuse as a function of the combustion conditions. The research needs include a data

base on the fate of metals, control of metals by particulate control devices the leachability of metals from residuals, and predictive methodologies for metal partitioning. Carefully controlled bench-scale studies on burning refuse could provide a significant contribution to our understanding of the fate of metals during combustion. In the area of NO_x, development of NO_x control schemes that are not detrimental to PCDD/PCDF control are necessary if more stringent NO_x levels are enforced by local authorities.