United States
Environmental Protection
Agency

Environmental Research
Laboratory
Duluth MN 55804

EPA-600/3-79-049
October 1979

Research and Development

EPA

Effects of Nutrient Enrichment, Light Intensity and Temperature on Growth of Phytoplankton from Lake Huron

LIBRARY
U.S. ENVIRONMENTAL PROTECTION AGENCY
EDISON, N.J. 08817

EP 600/3
79-049

RESEARCH REPORTING SERIES

Research reports of the Office of Research and Development, U.S. Environmental Protection Agency, have been grouped into nine series. These nine broad categories were established to facilitate further development and application of environmental technology. Elimination of traditional grouping was consciously planned to foster technology transfer and a maximum interface in related fields. The nine series are:

1. Environmental Health Effects Research
2. Environmental Protection Technology
3. Ecological Research
4. Environmental Monitoring
5. Socioeconomic Environmental Studies
6. Scientific and Technical Assessment Reports (STAR)
7. Interagency Energy-Environment Research and Development
8. "Special" Reports
9. Miscellaneous Reports

This report has been assigned to the ECOLOGICAL RESEARCH series. This series describes research on the effects of pollution on humans, plant and animal species, and materials. Problems are assessed for their long- and short-term influences. Investigations include formation, transport, and pathway studies to determine the fate of pollutants and their effects. This work provides the technical basis for setting standards to minimize undesirable changes in living organisms in the aquatic, terrestrial, and atmospheric environments.

This document is available to the public through the National Technical Information Service, Springfield, Virginia 22161.

EPA-600/3-79-049
October 1979

EFFECTS OF NUTRIENT ENRICHMENT, LIGHT INTENSITY, AND TEMPERATURE ON GROWTH OF PHYTOPLANKTON FROM LAKE HURON

by

C. Kwei Lin and Claire L. Schelske
Great Lakes Research Division
Great Lakes and Marine Waters Center
University of Michigan
Ann Arbor, Michigan 48109

Grant No. R800965

Project Officer

J. Kent Crawford
Large Lakes Research Station
Environmental Research Laboratory-Duluth
Grosse Ile, Michigan 48138

ENVIRONMENTAL RESEARCH LABORATORY-DULUTH
OFFICE OF RESEARCH AND DEVELOPMENT
U.S. ENVIRONMENTAL PROTECTION AGENCY
DULUTH, MINNESOTA 55804

LIBRARY
U.S. ENVIRONMENTAL PROTECTION AGENCY
EDISON, N.J. 08817

DISCLAIMER

This report has been reviewed by the Environmental Research Laboratory-Duluth, U.S. Environmental Protection Agency, and approved for publication. Approval does not signify that the contents necessarily reflect the views and policies of the U.S. Environmental Protection Agency, nor does mention of trade names or commercial products constitute endorsement or recommendation for use.

FOREWORD

This report contains results of an extensive set of experiments on the effects of nutrient enrichment on the growth of natural phytoplankton assemblages from Lake Huron. It is unique in that responses to added nutrients were determined for individual species within the phytoplankton assemblages which were naturally occurring and which were produced by complex dynamic interactions within the ecosystem. The results clearly show that phosphorus stimulated phytoplankton growth more than any other nutrient and is therefore the nutrient which must be controlled to prevent accelerated eutrophication or overproduction of algal biomass.

SUMMARY

This report consists of three major parts: a seasonal study on effects of nutrient enrichment on the growth of natural phytoplankton assemblages, effects of light and temperature on the growth of natural phytoplankton assemblages and effects of light and temperature on the growth of three species of diatoms maintained in laboratory cultures. Natural phytoplankton assemblages collected from a station located 43°33'09" and 82°29'11" in southern Lake Huron were used for bioassays by adding nutrients directly to lake water samples. Ten experiments were conducted from April to December 1975 to evaluate nutrients that were limiting phytoplankton production in surface waters of southern Lake Huron. In each experiment, responses of the natural phytoplankton populations to nutrient treatments were determined by chlorophyll production and cell counts. Nutrient treatments including 18 combinations were divided into two groups: ALL treatments or lake water (LW) treatments. The complete set of nutrients used in the experiments, phosphorus, nitrogen, silica, EDTA, iron, trace metals other than iron and vitamins, were combined as one treatment designated ALL. Other ALL treatments consisted of deleting one or two nutrients from the ALL treatment. The LW treatments consisted of single spikes of EDTA, phosphorus, nitrogen and silica added directly to lake water. Five levels of phosphorus (1, 3, 5, 10 and 20 μg P/liter) also were used as ALL treatments.

Responses to different treatments were varied and complex among treatments during the seasonal study. Responses were complicated further because major changes in the species composition of phytoplankton occurred as the result of treatments; the most obvious effect of this type was the drastic reduction in proportion of diatoms when silica became limiting in the ALL treatments. Other changes were noted at the species level.

Of the treatments tested, nitrogen had the least effect on chlorophyll production. Deleting nitrogen in the ALL treatment usually caused no change in chlorophyll production in comparison to the complete ALL treatment, and adding nitrogen in the LW treatment did not increase chlorophyll production.

Phosphorus, on the other hand, had the greatest effect on chlorophyll production. Deleting phosphorus from the ALL treatment in some experiments resulted in a response similar to that for untreated lake water, but in other experiments chlorophyll production was greater than in untreated lake water. However, the maximum response (greatest chlorophyll production) was never obtained in an ALL treatment with phosphorus deleted, and chlorophyll production in the ALL treatments generally increased with increasing phosphorus concentrations at levels as small as 1 and 3 μg P/liter in some experiments. The response to additions of phosphorus alone to LW varied seasonally but was always distinct. Phosphorus as a single factor in treatments was less

significant in stimulating chlorophyll production during July, August and September than in other months.

Deletion of EDTA and Fe-EDTA reduced chlorophyll production greatly in comparison to the complete ALL treatment, but not as much as deletion of phosphorus. Deleting EDTA caused bigger reductions than deleting Fe-EDTA; however, this was complicated because deleting EDTA apparently caused an inhibitory effect due to the trace metals in the ALL treatment. Deleting trace metals had a small effect, but deleting trace metals and EDTA reduced chlorophyll production significantly during July, August and September.

Silica deletion in the ALL treatments usually had a relatively small effect on chlorophyll production, but occasional depletion in lake water resulted in drastic reduction in diatom proportion. Addition of silica as a single spike had little or no effect on chlorophyll production.

Phosphorus produced the largest response of any single addition to lake water and additions of EDTA increased production to a small degree in several experiments.

Phosphorus, EDTA, and possible Fe-EDTA were the most important factors in stimulating chlorophyll production in the ALL treatments. During the summer months phosphorus and either EDTA or both EDTA and Fe-EDTA were needed in the ALL treatment to obtain maximum responses. During this time neither phosphorus nor EDTA added singly caused large increases in phytoplankton growth.

The effects of light intensities (40, 80, and 160 μEin m^{-2} sec^{-1}) and temperatures (5, 10 and 18°C) on the growth of winter phytoplankton assemblages were evaluated under optimum nutrient conditions. Both chlorophyll standing crop and cell counts increased with temperature and light intensity. At 5°C, the effect of light intensity was less than at other temperatures. Species responses in the assemblage were variable. Growth of *Cyclotella comensis*, the dominant population at the beginning of the experiment, increased little compared to other species and was greatest at 10°C. *C. stelligera* also appeared to grow best at 10°C. The majority of species that were present abundantly among various light-temperature treatments, were eurythermal. *Diatoma tenue* var. *elongatum*, *Fragilaria crotonensis*, *Nitzschia acicularis* and *Synedra filiformis* were the dominant populations at the end of the experiment with maximum growth rates ranging from .59 to 1.15 divisions day^{-1}. Phosphorus to nitrogen uptake ratios increased with temperature and with light level at 10 and 18°C as did phosphorus to silica uptake ratios. Production of chlorophyll per unit of phosphorus and silica consumed increased with temperature and with light level at 10 and 18°C.

The effects of light intensity and temperature on the growth of diatoms was also studied with cultures isolated from the Great Lakes which had been maintained in liquid culture for at least one year. A total of twelve species were maintained in a Chu 10 medium modified by reducing the hardness, trace metal constituents and organic substances to levels approximating those found in the upper Great Lakes. Specific growth rates were determined for three species, *Diatoma tenue* var. *elongatum*, *Fragilaria crotonensis* and *Asterionella formosa*, in separate light and temperature gradient experiments. The light

intensity was set at 15, 40, 120 and 300 μEin m^{-2} sec^{-1} and temperature at 5, 10 and 18°C. The saturation light intensity for optimal growth was approximately 120 μEin m^{-2} sec^{-1} for *Diatoma* and *Asterionella*, and 40 μEin m^{-2} sec^{-1} for *Fragilaria*. Maximum growth rates for all three taxa were similar at 10° and 18°C, but were significantly reduced at 5°C. Cellular chlorophyll content, however, was inversely related to light level, but was affected by temperature to a lesser degree. Growth rates from these experiments compared with results obtained from nutrient enrichment bioassays of natural phytoplankton communities indicate that the unialgal isolates of the three species have greater specific growth rates under culture conditions than were obtained from the same species in natural assemblages growing in enriched natural lake water.

This report was submitted in fulfillment of grant no. R800965 by Claire L. Schelske, Great Lakes Research Division, University of Michigan, under the sponsorship of the U.S. Environmental Protection Agency. This report covers a period from May 1, 1973 to October 31, 1976, and was completed as of October 31, 1976.

CONTENTS

Foreword iii
Summary iv
Figures. viii
Tables x
Acknowledgements xii

1. Introduction 1
2. Nutrient Enrichment Bioassay 3
   Methods 3
   Physical-chemical characteristics of sampling site. 6
   Phytoplankton species composition and abundance 9
   Nutrient enrichment experiments with natural phytoplankton assemblages. 15
   Discussion. 39
3. Effects of Light and Temperature 42
   Introduction. 42
   Methods 42
   Results 46
   Discussion. 57
4. Conclusions and Recommendations. 59

References 61

FIGURES

Number		Page
1	Map of Lake Huron indicating the sample location	4
2	Seasonal variation in total dissolved phosphorus (TDP), nitrate and silica concentrations of surface water at sampling station	10
3	Seasonal variation in water temperature at sampling station.	11
4	Seasonal variation of phytoplankton standing crop as indicated by chlorophyll *a* levels and cell numbers	12
5	Effect of nutrient enrichments on phytoplankton growth indicated by chlorophyll *a* level ($\mu g\ l^{-1}$) and line at end of bar indicates ± one standard deviation. Experiment period 13-23 April 1975.	17
6	Experiment period 2-12 May 1975. See Fig. 5 for further explanation	19
7	Chlorophyll *a* production in response to varying phosphate concentrations. Experiment period 2-12 May 1975	19
8	Experiment period 2-12 June 1975. See Fig. 5 for further explanation	21
9	Chlorophyll *a* production in response to varying phosphate concentrations. Experiment period 2-12 June 1975	22
10	Experiment period 1-10 July 1975. See Fig. 5 for further explanation	23
11	Chlorophyll *a* production in response to varying phosphate concentrations. Experiment period 1-10 July 1975	25
12	Experiment period 23 July-1 August 1975. See Fig. 5 for further explanation	26
13	Chlorophyll *a* production in response to varying phosphate concentrations. Experiment period 23 July-1 August 1975 .	27

Number		Page
14	Experiment period 19-28 August 1975. See Fig. 5 for further explanation	29
15	Chlorophyll *a* production in response to varying phosphate concentrations. Experiment period 19-28 August 1975. . .	30
16	Experiment period 9-18 September 1975. See Fig. 5 for further explanation	31
17	Chlorophyll *a* production in response to varying phosphate concentrations. Experiment period 9-18 September 1975. .	31
18	Experiment period 23 September-2 October 1975. See Fig. 5 for further explanation	33
19	Chlorophyll *a* production in response to varying phosphate concentrations Experiment period 23 September-2 October 1975	33
20	Experiment period 21-30 October 1975. See Fig. 5 for further explanation	34
21	Chlorophyll *a* production in response to varying phosphate concentrations. Experiment period 21-30 October 1975 . .	35
22	Experiment period 10-19 December 1975. See Fig. 5 for further explanation	36
23	Chlorophyll *a* production in response to varying phosphate concentrations. Experiment period 10-19 December 1975. .	37
24	Seasonal variation in effect of nutrient treatments on chlorophyll production (ratio of chlorophyll *a* values measured in final and initial days of the experiments). .	38
25	Effects of water temperature on growth of *Asterionella formosa*, *Diatoma tenue* var. *elongatum* and *Fragilaria crotonensis* in culture. Growth is determined by cell numbers (except for *F. crotonensis*) and chlorophyll *a* concentrations	54
26	Effects of light intensity on growth of *Asterionella formosa*, *Diatoma tenue* var. *elongatum* and *Fragilaria crotonensis* in culture. Growth is determined by cell numbers and chlorophyll *a* concentrations	55

TABLES

Number		Page
1	Schedule and Platforms for Routine Sampling	5
2	Nutrient Combinations for Enrichment Bioassay	7
3	Variety and Concentration of Nutrients for Enrichment Experiments	8
4	Temperature Levels, Light/Dark Cycles and Light Intensities Programmed for Each Experiment.	8
5	Seasonal Variation of Species Composition and Population Density of Phytoplankton Communities at Sampling Station. . .	13
6	Effect of Temperature and Time Delay on Phytoplankton Response (μG Chlorophyll *a*/L) to Nutrient Enrichment During Summer and Winter.	16
7	The Effect of Various P Concentrations in Complete Enrichments (ALL) on the Growth of the Two Most Abundant Species of the 23 July 1975 Experiment. N Indicates Cell ml^{-1} and k the Number of Doublings day^{-1}	29
8	Chemical Composition of Improved Culture Medium for Great Lakes Diatoms (FM Medium)	44
9	Species and Origin of Planktonic Diatoms That Have Been Isolated and Cultured in Single Species Culture	45
10	Species Composition and Abundance of Winter Phytoplankton in Southern Lake Huron	47
11	Average Growth Rate of Phytoplankton Cultured in 9 Light-Temperature Combinations in 9 Days. Rates (r) are Calculated as Number of Doubling (Cell Number and Chlorophyll) per Day .	48
12	Effects of Light and Temperature on Species Growth Rate of Enriched Winter Phytoplankton	49

Number		Page
13	Chlorophyll Production and Nutrient Consumption in Phytoplankton Culture at 9 Light-Temperature Combinations During a 9-Day Period	51
14	Effects of Light and Temperature on Ratios by Weight, of P, N and SI Consumed per Unit	52
15	Maximum Growth (K_{max}) rates of *Asterionella formosa, Diatoma tenue* var. *elongatum* and *Fragilaria crotonensis* Incubated at 3 Temperature Levels	52
16	Maximum Growth Rates (K_{max}) of *Asterionella formosa, Diatoma tenue* var. *elongatum* and *Fragilaria crotonensis* Incubated at 4 Light Levels	56
17	Variation of Cellular Content of Chlorophyll *a* as Affected by Different Light Intensities	56
18	Variation of Cellular Content of Chlorophyll *a* as Affected by Temperature Levels	57

ACKNOWLEDGMENTS

We thank Paul Friedrich for his excellent performance in bioassay experiments and organizing experimental results. We gratefully acknowledge the help of Laurie Feldt for phytoplankton identification and counts, and Jill Goodell and Paul Swiercz for water chemistry analyses. We are also grateful to the personnel of the U.S. Coast Guard at Selfridge Air Force Base who assisted in field sampling.

Appreciation is expressed for the assistance and interest of the Grant Project Officer, Kent Crawford.

SECTION 1

INTRODUCTION

It is generally recognized that the Great Lakes have been undergoing accelerated eutrophication (Beeton 1969) and that phosphorus is an important nutrient associated with the process (Schelske et al. 1974). In the upper Great Lakes it seems clear that additional phosphorus inputs accelerate eutrophication (Schelske 1975). Increased inputs of phosphorus not only enhance primary production but also may cause depletion of other nutrients. The shift in nutrient limitation may cause changes in species composition and succession. In Lake Michigan, Schelske and Stoermer (1971) predicted that continued silica depletion resulting from increased inputs of phosphorus would limit the growth of diatoms and gradually cause a shift from communities dominated by diatoms to those dominated by blue-green and green algae. Similar effects due to limited availability of nutrients such as trace elements and accessory growth factors such as vitamins and chelates may also occur.

Schelske et al. (1972) demonstrated that phosphorus, when combined with small quantities of trace metals, vitamins and a chelate, had a greater effect on Lake Superior phytoplankton than phosphorus alone. Deficiencies of minor nutrients are more likely to occur in oligotrophic lakes than in eutrophic lakes. Goldman (1972) found that a significant deficiency of trace metals occurred in lakes of high latitudes and high altitudes. Similarly, vitamins, biotin and thiamine, have been shown to be important growth factors for many species of phytoplankton (Provasoli and Carlucci 1974), and deficiency of these organics are found in oligotrophic waters (Carlucci and Bowes 1972; Goldman 1972). Gerloff and Fitzgerald (1975) found that in addition to phosphorus, vitamin B_1, B_{12}, boron and zinc are limiting nutrients to Great Lakes *Cladophora*. Little is known about the individual effects of these micronutrients on Great Lakes phytoplankton; even less is known about their availability in open waters of the Great Lakes.

Sewage effluents probably are still the major source of phosphorus inputs in the Great Lakes. As sewage effluents also contain other ingredients that may stimulate algal growth in some waters, it is important to consider the combined effects of multiple nutrients and other factors in nutrient enrichment experiments. Previous results indicate that the predicted effects of nutrient enrichment based on phosphorus alone are perhaps conservative (Schelske et al. 1974).

The temporal changes in species composition and population densities of phytoplankton assemblage along with background nutrients, light and temperature regimes of the water mass would, *a priori*, affect the intensity and variety of limiting nutrients seasonally in the Great Lakes. To understand the dynamic features of seasonal nutrient limitation we decided that bioassays must be conducted as frequently as possible during an annual cycle.

Nutrient enrichment bioassays have been widely used to study effects of nutrient supplies and limitation to phytoplankton growth in natural waters. Although the methods have been designed in various degrees of complexity, two major approaches are commonly involved in nutrient enrichment experiments: (1) add nutrients to filtered lake water in which cultured species are inoculated (PAAP 1969; Smayda 1974); and (2) add nutrients to natural water which contains natural phytoplankton standing crops (Thomas 1969). The first approach is useful only in evaluating relative nutrient effects based on total phytoplankton production for one species and thus has limited value in relation to evaluating the effects of nutrient conditions on species composition and succession, which can be evaluated with the second approach.

The primary objectives of the present project include: (1) to determine the seasonal variations in the effect of phosphorus limitation to phytoplankton growth; (2) to determine the effect of nutrient limitations other than phosphorus; (3) to determine the importance of chemical changes on growth and succession of phytoplankton assemblages; and (4) to investigate the effects of light and temperature on phytoplankton growth and nutrient utilization.

SECTION 2

NUTRIENT ENRICHMENT BIOASSAY

Bioassay experiments were undertaken to determine the effects of nutrients and accessory growth factors on the growth of naturally occurring phytoplankton assemblages. As little information is available on the role these factors play in regulating phytoplankton production and species composition in the Great Lakes, these experimental results will fill a critical need for data which can be used in establishing water quality criteria.

Data from these experiments will be particularly useful as they were obtained concurrently with an investigation of limnological conditions, including phytoplankton-nutrient relationships, in southern Lake Huron and Saginaw Bay (Schelske et al., In prep.; Stoermer et al., In prep.).

METHODS

Field Sampling

Lake water samples containing natural phytoplankton used in the bioassay experiments were taken from a station at 43°33'9"N and 82°29'11" in southern Lake Huron (Fig. 1). This station is approximately 60 km due north of Port Huron and 15 km offshore from the Michigan thumb. The location was designated as station 13 in GLRD's Southern Lake Huron Project (Schelske et al., In prep.). The water quality of this location was characterized as open southern Lake Huron segment 7 (IJC 1976), or Zone IV as described by Schelske and Roth (1973).

A total of 10 experiments were conducted throughout the year (Table 1). To take advantage of the ongoing limnological investigations, the first three samples were scheduled to coincide with ship cruises for the southern Lake Huron project. Those samples were taken from the R/V ROGER R. SIMONS around noon and delivered to the Ann Arbor laboratory about 2200 hr. After June, all water samples were taken by U.S. Coast Guard helicopter between 1400-1500 hr. The helicopter made sampling possible throughout the rest of the schedule and reduced the time from collection to arrival in the laboratory to less than 4 hrs, about 6 hrs. less than the previous method. On each date 20 liters of surface lake water (3-5 m) were collected by casting 5-liter Niskin bottles from the hovering helicopter. A 25-kg anchor was attached to the end of the sampling line to ensure sampling at the desired depth.

To prevent the phytoplankton samples from being exposed to excessive light, the water samples were taken with opaque Niskin bottles and immediately

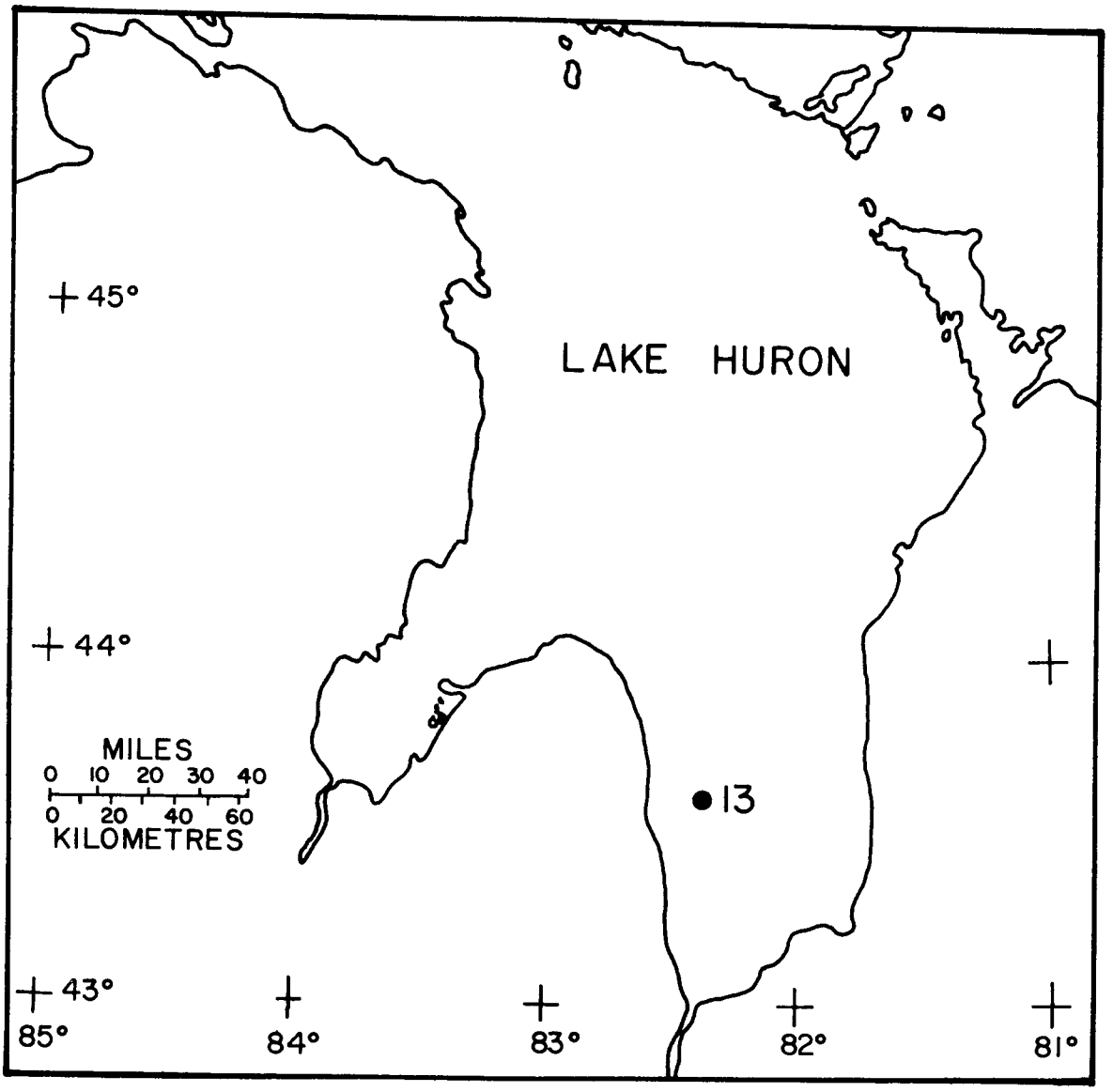

FIG. 1. Map of Lake Huron indicating the sample location.

TABLE 1. SCHEDULE AND PLATFORMS FOR ROUTINE SAMPLING

Date	Platform
April 13, 1975	Ship
May 2, 1975	"
June 2, 1975	"
July 1, 1975	Helicopter
July 23, 1975	"
August 19, 1975	"
September 9, 1975	"
September 23, 1975	"
October 21, 1975	"
December 10, 1975	"
March 17, 1976	"

transferred to a 20-liter rectangular polyethylene container. During transporting, the water samples were kept in the dark in a well-insulated chest cooler packed with ice to maintain a stable water temperature. Normally, the water temperature varied no more than 1°C between that in the field after collection and that on arrival in the laboratory.

Laboratory Procedures

Immediately upon returning to the laboratory in Ann Arbor (between 1730-1800 hr), the samples were processed for bioassay experiments, including water chemistry analyses, chlorophyll determinations and phytoplankton counts.

Water Chemistry--

After thorough mixing of the lake water sample, a 250-ml sample was filtered through a 47-mm Millipore filter (0.45 μm pore size), which was used for chlorophyll *a* determinations by the method of Strickland and Parsons (1968). The filtrate was analyzed for total dissolved phosphorus (TDP), NO_3-N and SiO_2 with a Technicon Auto Analyzer.

Phytoplankton--

Phytoplankton species composition and abundance were determined at the beginning and end of the experiments by procedures similar to Stoermer et al. (1975). A subsample of 50-ml lake water was fixed with 4% glutaraldehyde and kept in the refrigerator at 4°C overnight. The fixed phytoplankton was resuspended by shaking and filtered onto a 25-mm AA Millipore filter. After partial dehydration through an ethanol series, the filter was embedded in clove oil, mounted on a 50 x 70-mm glass slide and then covered with a 43 x 50-mm #1 cover glass. It took approximately two weeks for the preparation to dry. After drying, the edges of the cover glasses were sealed with paraffin. Phytoplankton present in the preparation were identified and counted using a Leitz Ortholux microscope. Population estimates given are the average counts of two radii (10 mm), calculated as number of cells per ml.

Nutrient Bioassay--

For bioassay experiments, 250-ml samples of the untreated lake water were dispensed into 54 numbered 500-ml polycarbonate Erlenmyer flasks. The flasks were divided into 18 three-flask sets with each set receiving one of 18 nutrient treatments, shown in Table 2. The nutrient combination in each treatment was made up by dispensing 0.5-ml aliquots of separately prepared stock solutions directly into the flasks. Table 3 gives the nutrient concentrations in the enriched experiments. Biotin, cyanocobalamin and thiamine were combined into one treatment (vitamins) and Cu, Zn, Co, Mn, and Mo into another (trace metals) to reduce the number of treatments.

For the April experiment, the enrichment schedule was slightly different in that NH_4Cl was added as a treatment and P was used at only one level (20 μg/l).

After treatment the flasks were positioned by number on a shaker table and incubated for 9 or 10 days. Each flask, numbered from 1 to 54, was repositioned each day according to a randomized table to minimize unevenness of light received at each position on the shaker table. All flasks were also shaken by hand each day, since continuous rotation on the shaker table could not be used as it caused phytoplankton to clump.

Day-night cycles and temperatures in the growth chamber for incubating phytoplankton were programmed according to general seasonal patterns (Table 4). The light was provided by 20 40-W cool white fluorescent light bulbs with intensities of 160 μEin m^{-2} sec^{-1} for the summer and 80 μEin m^{-2} sec^{-1} for the rest of the year.

To determine phytoplankton growth during the 9-10 day incubation, 50-ml samples were taken for chlorophyll analysis from each flask at days 3, 6 and 9 (or days 4, 7, 10). The filtrate from these samples was used for the same nutrient analysis.

PHYSICAL-CHEMICAL CHARACTERISTICS OF SAMPLING SITE

The major sources of water in Lake Huron are the outflows from Lakes Michigan and Superior. As indicated by Schelske and Roth (1973), the general chemical composition of Lake Huron water is a mixture of Lakes Michigan and Superior, so concentrations of conservation ions over much of the lake are intermediate between those two head-water lakes. However, southern Lake Huron water receives dissolved substances from two other sources. The major one is the outflow of water from Saginaw Bay containing inorganic and organic pollutants from the Saginaw River and its tributaries which drain residential, agricultural and industrial areas. The second is runoff from the Ontario shore which increases nutrient concentrations greatly during the spring in a relatively small nearshore zone. Chemical analyses of water samples taken during May-June 1974 indicate that the nutrient concentrations at these inshore regions along Ontario were markedly higher during this time than in other nearshore areas of southern Lake Huron (Davis et al., In prep.). Precipitation and other atmospheric inputs are also important sources of certain

TABLE 2. NUTRIENT COMBINATIONS FOR ENRICHMENT BIOASSAY

LW (lake water)
All[1]
All - P
All - N
All - Si
All - FeEDTA
All - FeEDTA - Na_2EDTA
All - TM
All - TM - Na_2EDTA
All - VT
LW + Na_2EDTA
LW + 20 μg P
LW + N
LW + Si
All[2] (1 μg P)
All[2] (3 μg P)
All[2] (5 μg P)
All[2] (10 μg P)

[1]All indicates the lake water (LW) enriched with complete nutrients listed in Table 3.

[2]Phosphorus concentration adjusted to the amount shown in parenthesis.

TABLE 3. VARIETY AND CONCENTRATION OF NUTRIENTS FOR ENRICHMENT EXPERIMENTS

Nutrients	Compound	Concentration ($\mu g\ l^{-1}$)
P	KH_2PO_4	20
N	$NaNO_3$	200
Si	$Na_2SiO_3 \cdot 9H_2O$	1,000
Vitamin Mix (VT)		
Biotin		400
B_{12}	Cyanocobalamin	2
B_1	Thiamine · HCl	2
Trace Metal Mix (TM)		
Cu	$CuCl_2 \cdot 2H_2O$	0.002
Zn	$ZnCl_2$	5
Co	$CoCl_2 \cdot 6H_2O$	0.2
Mn	$MnCl_2 \cdot 4H_2O$	50
Mo	$Na_2MoO_4 \cdot 2H_2O$	1.5
Fe	FeEDTA	10
	$Na_2EDTA \cdot 2H_2O$	100

TABLE 4. TEMPERATURE LEVELS, LIGHT/DARK CYCLES AND LIGHT INTENSITIES PROGRAMMED FOR EACH EXPERIMENT

Date	Temp. (°C)	L/D (hr)	Light intensity ($\mu EinM^{-2}\ sec^{-1}$)
Apr 13	3-5	11:13	80
May 2	3-5	13:11	80
Jun 2	10-12	14:10	80
Jul 1	17-19	14.5:9.5	160
Jul 23	19-21	14.5:9.5	160
Aug 19	20-23	14.5:9.5	160
Sep 9	18-19	12:12	160
Sep 23	16-18	12:12	160
Oct 21	13-15	12:12	80
Dec 10	4-6	9:15	80

nutrients to southern Lake Huron (Delumyea and Petel 1977).

Detailed background data on water chemistry in southern Lake Huron were collected by the Canada Centre for Inland Waters in 1971 and the Great Lakes Research Division, University of Michigan, in 1974. Figure 2 shows the fluctuation in concentrations of total dissolved phosphorus (TDP), nitrate and silica of surface water at station 13 from June to December 1975. The TDP ranged between 1.46 to 10.13 μg l^{-1} with average around 4. The peak concentration that occurred in August-September gradually dropped to a low level in December.

The seasonal fluctuation of silica was very different from that of TDP. While relatively high silica concentrations (>0.8 mg l^{-1}) occurred during summer and winter, there was a rapid decrease starting in mid-August that persisted until the end of October. Lowest values during the fall depletion were less than 0.2 mg l^{-1}. This pronounced silica depletion was not recorded in 1971 during investigations by the Canada Centre for Inland Waters.

Nitrate concentrations in open Lake Huron water are normally high (>200 μg N l^{-1}) due to the nitrate-rich water flowing in from Lake Superior. The seasonal pattern in 1975 was similar to that of silica, with a marked decrease in late summer and early fall.

The seasonal temperature distribution in the surface water at station 13 is shown in Fig. 3. The low temperature recorded in early spring was about 5°C. On the open lake temperatures from January to the end of April, a period which was not sampled, would be less than 5°C with the minimum being about 0°C (IJC 1976). Gradual warming begins in early May and reaches its maximum at 22°C during late August.

PHYTOPLANKTON SPECIES COMPOSITION AND ABUNDANCE

The seasonal variation in phytoplankton standing crop, as determined by cell counts, is given in Fig. 4. Unlike the bimodal pattern of phytoplankton abundance for many temperate waters that exhibit spring and fall maxima, the seasonal cycle in Lake Huron only showed small variations in cell counts with a fall maximum. Starting with a low spring standing crop (*ca.* 500 cells ml^{-1}), phytoplankton numbers increased over the summer and reached the annual maximum at 3,000 cells ml^{-1} in early September. This large standing crop lasted until December.

Although chlorophyll values are often used to indicate phytoplankton biomass, we find that they deviated considerably from cell counts during the spring and winter periods (Fig. 4) when the maximum chlorophyll values were found. Chlorophyll maxima tended to follow a bimodal pattern with highest values in the spring and fall and lowest values during the summer.

The pronounced changes in the quantity of chlorophyll per cell (cellular contents of chlorophyll) during the study are most likely due to two factors. One is the seasonal variation of dominant species with different cell volumes that may make the cell numbers less meaningful for biomass measurements. Examining the abundance and species composition of the phytoplankton

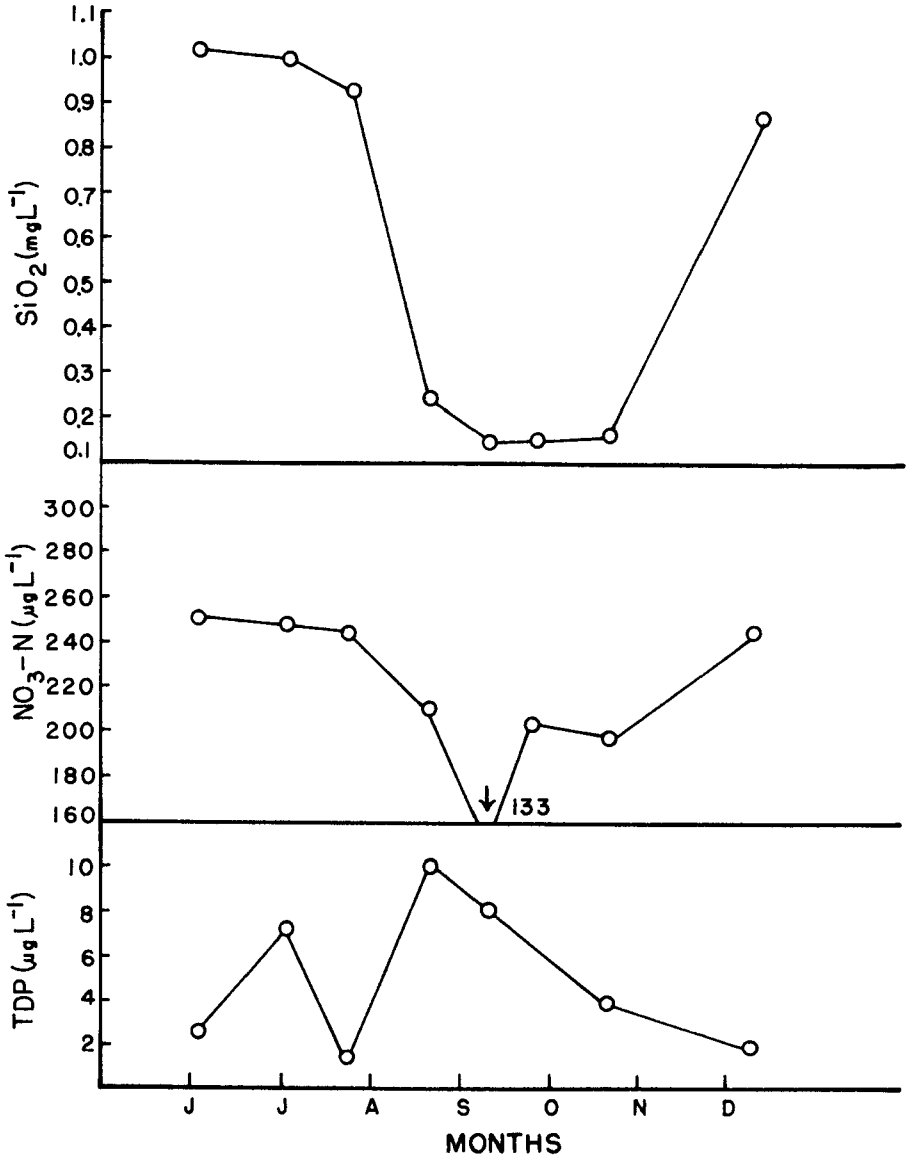

FIG. 2. Seasonal variation in total dissolved phosphorus (TDP), nitrate and silica concentrations of surface water at sampling station.

assemblages in Table 5, we find that the fall community is predominated absolutely by *Cyclotella comensis*. The relatively small cell size of this species, with approximate cell volume 400 µm^3 (Vollenweider 1969), may in comparison to larger cells also contain a relatively small amount of pigment per cell. On the other hand, the winter-spring communities are comprised of smaller numbers of *C. comensis* but a greater abundance of larger species, such as *Asterionella formosa*, *Fragilaria crotonensis* and *Tabellaria fenestrata*. The cell volume of those species ranges between 700 and 4,000 µm^3.

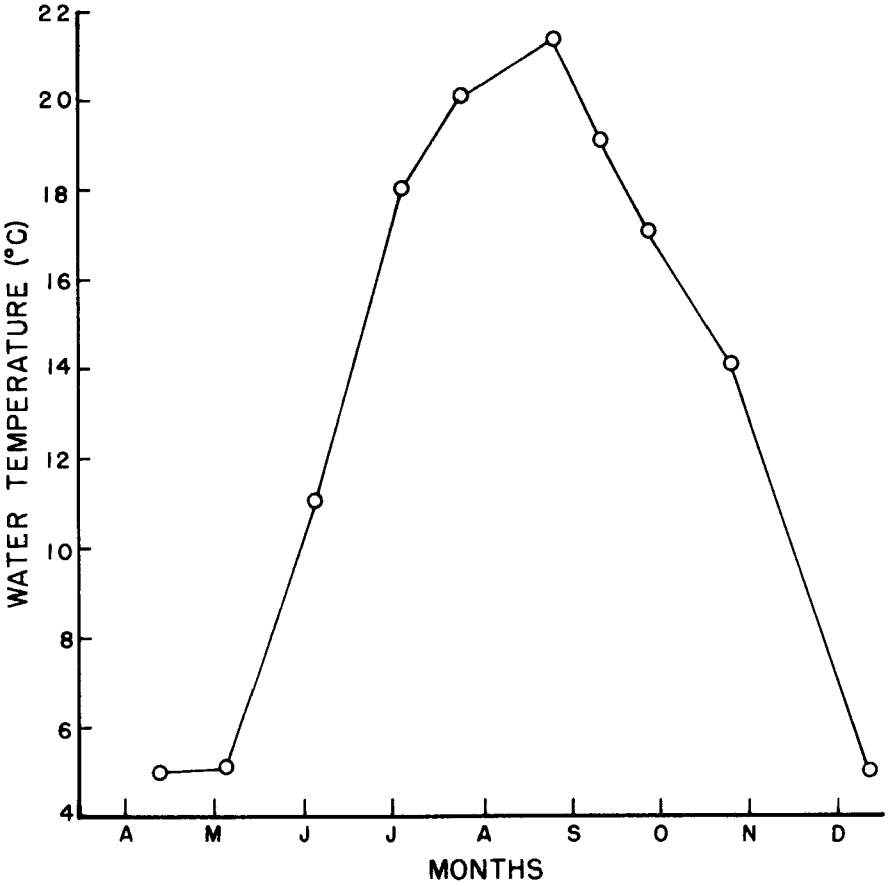

FIG. 3. Seasonal variation in water temperature at sampling station.

The second factor is that different light and temperature levels between summer and winter may cause great variation in the cellular content of chlorophyll within species. It has been shown that the chlorophyll content of numerous algae is inversely proportional to light intensity during growth (Kirk and Tilney Bassett 1967; Brown and Richardson 1968; see Section 3 of this report). Prolonged exposure to high light intensity also causes photodestruction of chlorophyll (Kok 1956).

The species composition and population density of phytoplankton assemblages in the surface water of southern Lake Huron between April 1975 and March 1976 are summarized in Table 5. Approximately 100 species were recorded in the 11 samples. The species composition in a single sample varied between 9 and 38 entities with fewest species in the period from July to October. Like the other Great Lakes, phytoplankton communities in Lake Huron are overwhelmingly dominated by a large number of diatom taxa. Among them, *Cyclotella* and *Fragilaria* were most abundant.

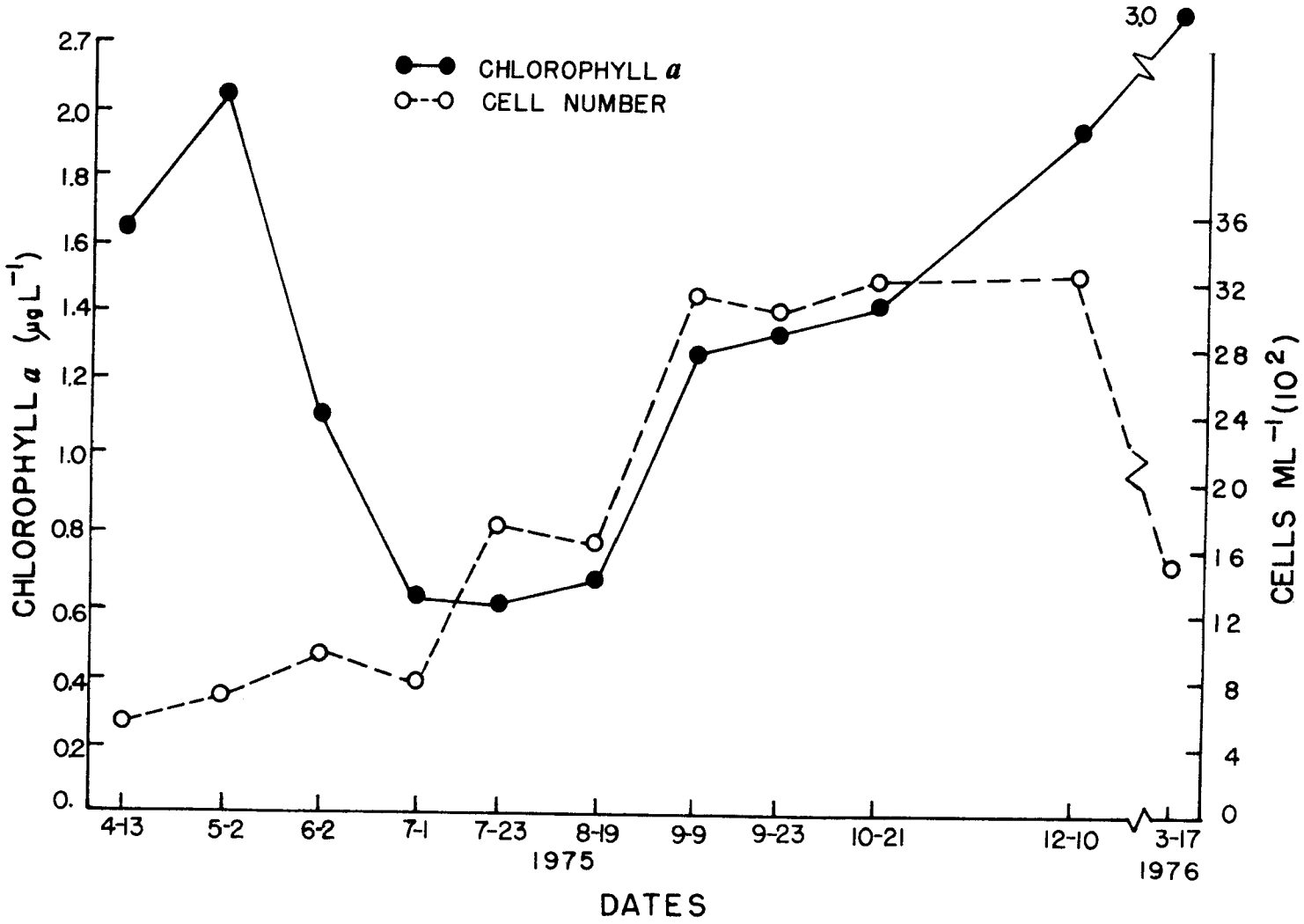

FIG. 4. Seasonal variation of phytoplankton standing crop as indicated by chlorophyll *a* levels and cell numbers.

TABLE 5. SEASONAL VARIATION OF SPECIES COMPOSITION AND POPULATION DENSITY OF PHYTOPLANKTON COMMUNITIES AT SAMPLING STATION

	1975										1976
	4-13	5-2	6-2	7-1	7-23	8-19	9-9	9-23	10-21	12-10	3-17
BACILLARIOPHYTA											
Achnanthes clevei var. *rostrata*											2
A. exigua var. *constricta*										11	
Amphora ovalis var. *pediculis*										4	2
A. subcostulata											2
Asterionella formosa	78	134	17	11	6					15	54
Coscinodiscus subsalsa										4	2
Cyclotella atomus		6									
C. comensis	25	34	59	218	911	1535	2959	2884	2964	2869	626
C. comta	4	4	4			2		2		4	2
C. cryptica			2								
C. michiganiana	2	6	2	2	2	15					19
C. ocellata	42	48	2	4				2			9
C. operculata	2	4									
C. pseudostelligera	2		4				2		2		
C. stelligera	29	42	21	258	762		13	42	8	19	26
Cyclotella comta auxospore							2				
Cyclotella comensis auxospore				6							
Cymbella subventricosa										2	
Diatoma tenue var. *elongatum*	6	15	11	2						11	37
Fragilaria brevistriata var. *inflata*										2	
F. capucina	4	25	126					6		13	135
F. construens	6										
F. construens var. *minuta*	2									2	2
F. crotonensis	67	11	166	23				17	23	11	233
F. intermedia			2								
F. intermedia var. *fallax*	2		2							11	5
F. pinnata							11				5
Hannaea arcus				2	2		2				
Melosira granulata	2		2								
M. islandica	27	2								2	70
M. italica subsp. *subartica*											2
Navicula costulata							2				2
N. lanceolata							2				2
N. pupula							2				
Nitzschia acicularis	6	10	2							4	5
N. dissipata	2	17	2								2
N. kutzingiana										2	
N. palea	2	4	4								7
N. recta											2
N. sigma											2
N. spiculoides		2									
Nitzschia sp. #1			2								
Nitzschia questionable sp.							2				2
Rhizosolenia eriensis	2	19	46	63						4	7
R. gracilis	11	38	163	109	4			2			
Stephanodiscus alpinus	2										
S. astraea		2					2				
S. minutus	21	21			2						2
S. subtilis	34	46	8								
S. tenuis	2			2							
S. transilvanicus										4	
Stephanodiscus sp. #14	2										
Stephanodiscus sp. #15											2
Surirella angusta											2
Synedra filiformis	2	40	52	21	6					4	30
S. minuscula			2								
S. ostenfeldii	2		29	2				2			
S. parasitica											2
S. ulna		2	4							6	5
Tabellaria fenestrata	63	36	71								61

TABLE 5 (continued)

	1975										1976
	4-13	5-2	6-2	7-1	7-23	8-19	9-9	9-23	10-21	12-10	3-17
CHLOROPHYTA											
Crucigenia quadrata						27	13		4		
Golenkinia radiata			2								
Scenedesmus bicellularis									4		2
S. quadricauda										2	2
Tetraedron minimum							6				
Ankistrodesmus sp. #2		2	2					2		2	2
Chlorella sp. #1									2		
Cosmarium sp. #1										2	
Gloeocystis sp. #1						8		4	8		
Mougeotia sp. #1							2				
Oedogonium sp. #1							2		2		
Oocystis sp. #1				2				2			
Oocystis spp.						6			8		
Undetermined green colony sp. #4									6		
CHRYSOPHYTA											
Dinobryon divergens					2						
D. sertularia									21		
Mallomonas alpina		2							2		
M. pseudocoronata				4							
Species *incertae sedis*											
Dinobryon cysts		2	2	13							
CRYPTOPHYTA											
Rhodomonas minuta var. *nannoplanctica*							2				
CYANOPHYTA											
Anabaena subcylindrica										23	
A. incerta								2	4		
A. thermalis						8	4	4	11		
Gomphosphaeria lacustris						4	2	2	2		
Oscillatoria bornetii			2								
O. limnetica										2	
O. retzii										13	
Anabaena sp. #3										130	
Microcystis sp. #1					2						
Oscillatoria sp. #1	8		2								
Oscillatoria sp. #2		8						2			
								2			
Undetermined flagellate spp.	59	111		44	61	4	109	111	136	38	49
#species	31	29	32	18	11	9	19	14	17	32	38
Total cells/ml	519	691	932	785	1761	1611	3140	3083	3209	3242	1427

The most prominent feature of the phytoplankton assemblage in Lake Huron is the occurrence of *Cyclotella comensis*, due not only to its large relative abundance but also to its limited distribution in the Great Lakes. This species was previously reported in Lake Superior (Holland 1965; Schelske et al. 1972).

As indicated by the available information on distribution, *C. comensis* appears to be an open-lake oligotrophic species. However, the abundant occurrence of this particular diatom reached nearly 3,000 cells ml^{-1} in open Lake Huron from September through December 1975. If this diatom is sensitive to nutrient enrichment and responds with increased standing crops, then it has the potential to develop excessive growths which may create a serious water management problem.

NUTRIENT ENRICHMENT EXPERIMENTS WITH NATURAL PHYTOPLANKTON ASSEMBLAGES

Phytoplankton responses to nutrient enrichments in each of the 10 experiments were evaluated by changes in chlorophyll concentrations and phytoplankton populations. The complete set of chlorophyll data for all the experiments is shown in Appendix 1. Due to the large number of species present and the diverse response of different species to various nutrients in each experiment, results of phytoplankton counts are discussed only for the predominant species, and examples for the detail species responses are given in Appendix 2.

Logistical problems are often encountered when natural phytoplankton communities are used for nutrient bioassay experiments, particularly when the sampling location is distant from the laboratory. Under such circumstances, transporting samples may require such a long period of time that water temperature, oxygen tension and other conditions may be altered, causing serious effects on the natural populations of phytoplankton.

Two specific experiments, one in the summer and the other in the winter, were conducted to determine the effect of changes in temperature and length of storage on phytoplankton responses to nutrient enrichment. Water samples collected with routine procedures on 1 July and 10 December 1975 were used for the experiments. Upon returning to the laboratory, two 2-liter water samples were kept separately in the dark at two temperature levels--4° and 20°C. At intervals of 4, 24 and 48 hrs, three 250-ml samples at each temperature were transferred to 500-ml polycarbonate Erlenmyer flasks and spiked with complete nutrients (ALL treatment, Table 2). These flasks were then placed in a growth chamber with temperature set at the field level--18° and 5°C for 1 July and 10 December, respectively. The phytoplankton growth response was determined by chlorophyll *a* biomass at days 3, 6 and 9. As a control, one set of lake water with as little temperature change as possible was also spiked with complete nutrients and incubated without delay at the field temperature. Light levels for all experiments were 160 $\mu Ein\ m^{-2}\ sec^{-1}$ with continuous illumination.

The effect of temperature and time delay on phytoplankton growth is shown in Table 6. Chilling the summer sample to 4°C for 4 hrs prior to nutrient enrichment drastically reduced the chlorophyll production, from 30.5 $\mu g\ l^{-1}$ in

TABLE 6. EFFECT OF TEMPERATURE AND TIME DELAY ON PHYTOPLANKTON RESPONSE (μg CHLOROPHYLL *a*/l) TO NUTRIENT ENRICHMENT DURING SUMMER AND WINTER

Temperature treatment	Delay period (h)	Incubation period (days) July 1				December 10			
		0	3	6	9	0	3	6	9
Control	0	0.64	0.35	1.63	30.5	1.95	1.56	1.73	2.73
Cold (4 ± 1°C)	4	0.64	0.36	0.35	1.65	1.95	1.62	1.80	3.27
	24	0.64	0.20	0.29	1.03	1.95	1.52	1.98	3.32
	48	0.64	0.20	0.30	0.81	1.95	1.56	2.16	3.96
Warm (18-20°C)	4	0.64	0.38	1.28	11.24	1.95	1.48	1.86	3.60
	24	0.64	0.41	1.24	9.50	1.95	1.55	2.38	4.65
	48	0.64	0.26	1.57	4.69	1.95	1.92	2.48	5.61

the control to 1.65 μg l^{-1}. The effect on the sample stored at the warm temperature was less than at the cold temperature. In general, the longer the delay in the July experiment prior to nutrient enrichment bioassay, the smaller the response, presumably due to increased damage to phytoplankton with time. On the other hand in the December experiment, the response increased generally with the delay period.

In the control experiment on the July sample, flagellates were the important entity of the phytoplankton community. They increased from 44 to 36,186 cells/ml in 9 days after nutrient enrichment. These flagellates were rare in other seasons and appeared to be sensitive to environmental changes.

From this experiment, we conclude that chlorophyll production resulting from nutrient enrichment can be drastically affected by temperature fluctuation and storage time before the experiment is initiated. The effects apparently are complex and may have been secondary efforts resulting from changes in species compositions; experimental conditions may have created an environment well-suited for particular species.

Experiment 1 (13-23 April 1975)

Chlorophyll--

The maximum increase of chlorophyll, 1.67 to approximately 4.8 μg/l, was obtained for several treatments. Eliminating N, Si, Fe, TM, EDTA and VT from the ALL treatment had little effect on the final standing crop of chlorophyll (Fig. 5). With the exception of phosphorus, adding single nutrients did not increase the yield significantly over that in the LW treatment. Adding phosphorus alone, however, increased the yield nearly as much as was obtained from the ALL treatment. This result obviously indicated that phytoplankton growth at this time of the year was not limited greatly by nutrients other than phosphorus.

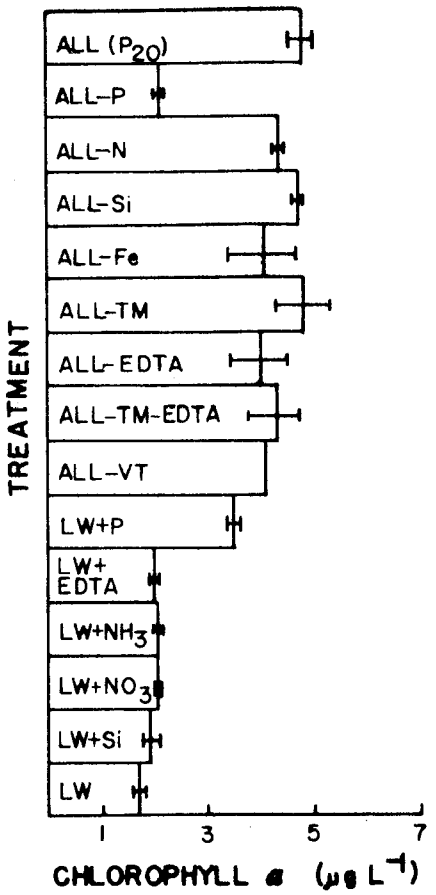

FIG. 5. Effect of nutrient enrichments on phytoplankton growth indicated by chlorophyll *a* level (μg l^{-1}) on the last day of the experiment. Line at end of bar indicates ± one standard deviation. Experiment period 13-23 April 1975.

Low lake water temperature (*ca.* 4°C), on the other hand, was undoubtedly a factor that limited the yield of chlorophyll under the experimental conditions.

Phytoplankton--

The population density of phytoplankton in April at the beginning of the experiment was approximately 500 cells ml^{-1} among approximately 30 species. The majority of species were diatoms with the assemblage being dominated by *Asterionella formosa* (15%), *Fragilaria crotonensis* (13%), *Tabellaria fenestrata* (12%), and *Cyclotella ocellata* (8%). Other than diatoms, flagellates, accounting for 11% of the total assemblage, were an important group.

With nutrient enrichment, the total number of cells increased substantially over the 9-day incubation. Sufficient nutrients were present in the ambient lake water (LW) to double the population size. The dominant diatom species in the original samples remained generally as major constituents during the experiment in all the nutrient treatments. *Fragilaria crotonensis* increased from the original 13% of the assemblage to 42% and 62% in treatments ALL-TM and LW + NH_4, respectively. Drastic reduction of flagellates, however, occurred in most treatments.

Experiment 2 (2-12 May 1975)

Chlorophyll--

Pronounced differences in chlorophyll production resulted from different nutrient treatments in this experiment (Fig. 6). Phosphorus added alone, again, produced the greatest effect on chlorophyll production among the individual nutrient spikes, increasing chlorophyll to a level about four times greater than the LW treatment. Little effect resulted from the other single additions of nutrients.

The ALL treatment with P at 20 $\mu g\ l^{-1}$ level increased chlorophyll production to 8.2 $\mu g\ l^{-1}$, about five times greater than the LW control. Elimination of either Fe or EDTA from ALL treatment reduced the chlorophyll yield to 6.38 and 6.35 $\mu g\ l^{-1}$.

Responses for ALL-P and LW were similar, indicating that P was the only or most important nutrient limiting phytoplankton growth in early May. Under these phosphorus-limited conditions the addition of P in increments (1, 3, 5, 10 and 20 $\mu g\ l^{-1}$) resulted in a progressive increase of chlorophyll production with an obvious increase at the level of 1 μg P l^{-1} (Fig. 7).

Comparing ALL (P20) and LW + P20 indicates that the ambient level of nutrients excluding phosphorus supported a phytoplankton standing crop about 60% as large as obtained with the ALL treatment. The level in LW + P was comparable to ALL + P5 indicating that other nutrients were limiting. Additional growth above these levels would depend on simultaneous additions of P and other nutrients, most likely Fe and EDTA.

Phytoplankton--

The species composition and abundance of phytoplankton in May was similar to April, with two obvious exceptions. In May considerably more flagellates (> 100 cells/ml, 16% of the assemblage) were present; the dominant pennate diatom, *Fragilaria crotonensis*, was replaced by the centric diatoms *Stephanodiscus subtilis* and *Cyclotella stelligera*.

In the ALL (P20) nutrient enrichment, total cell numbers increased from 691 to 5,643 cells ml^{-1}. *Fragilaria crotonensis*, accounting for 25% of the population, was the most abundant species. In fact, this species and *Fragilaria capucina* were the taxa that dominated the phytoplankton communities of other nutrient treatments (ALL-P, ALL-N, ALL-Si, ALL-Fe, ALL-Fe-EDTA, ALL-VT, LW + P, LW + N, LW + Si). It is interesting to note that those two species almost disappeared in ALL-TM treatment and an initially subordinate

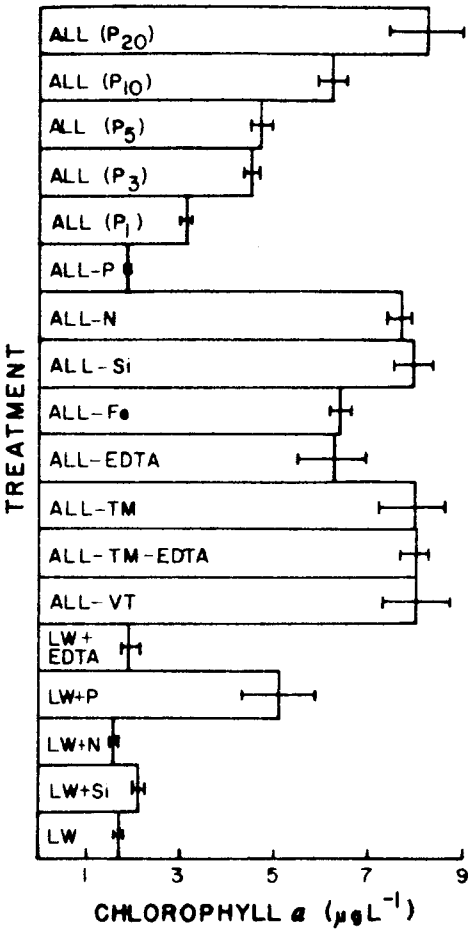

FIG. 6. Experiment period 2-12 May 1975. See Fig. 5 for further explanation.

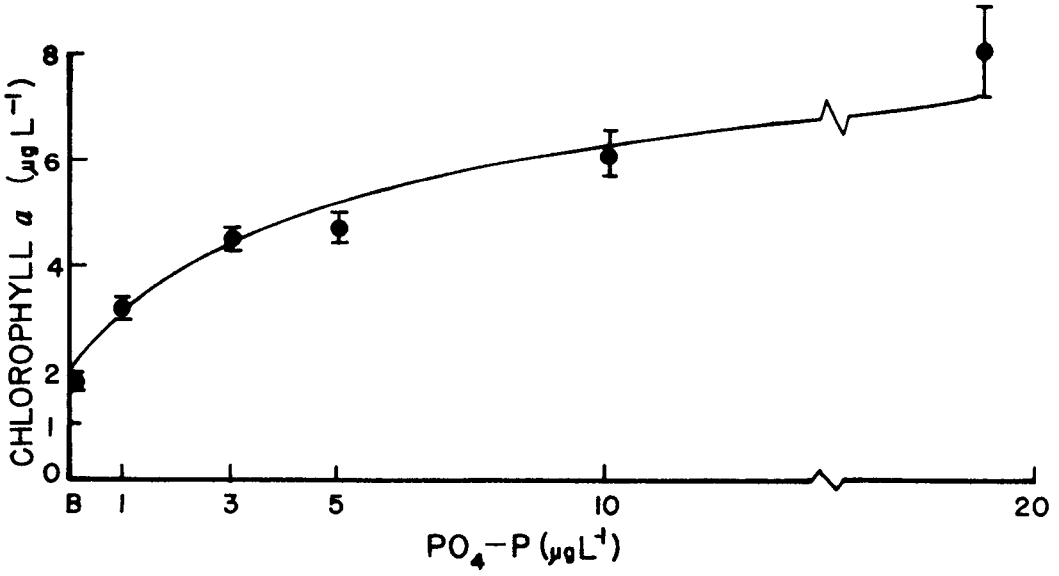

FIG. 7. Chlorophyll *a* production in response to varying phosphate concentrations. Experiment period 2-12 May 1975.

Synedra spp. became most abundant (> 23%). Under low P conditions, *Cyclotella stelligera* and *C. comensis* tended to dominate the assemblage.

Experiment 3 (2-12 June 1975)

Chlorophyll--

Phytoplankton growth in this experiment was affected by a greater number of treatments than in the previous experiments. Although the chlorophyll biomass decreased from 2.0 to 1.1 μg chlorophyll *a* l^{-1} in LW, chlorophyll concentrations in some treatments increased 40-fold (Fig. 8).

Single additions of P and EDTA to LW increased the chlorophyll concentrations compared to the LW control. Addition of P increased concentrations about five-fold and EDTA doubled concentrations.

Chlorophyll concentrations increased 40-fold in treatments ALL (P20), ALL-N, ALL-TM and ALL-TM-EDTA. Greater chlorophyll production in the two latter treatments in which TM was eliminated indicated inhibition due to TM in the ALL treatments. The inhibition effect was particularly obvious in the ALL-EDTA treatment which had only one-fifth the chlorophyll of the ALL-TM or ALL-TM-EDTA treatments, indicating the inhibitory effect of TM was compensated by the addition of EDTA.

The fact that removal of P (ALL-P) severely limited the chlorophyll production to 2.2 μg l^{-1}, combined with the effect of LW + P, clearly shows P as the primary limiting nutrient. Chlorophyll production increased linearly as P was added at 1, 3, 5, 10 and 20 μg l^{-1} (Fig. 9); unlike the April experiment it did not follow a hyperbolic relationship.

At increasing concentration of P the limiting effects of EDTA, Fe, VT and Si were evident (Fig. 8). Eliminating each one of these nutrients from ALL reduced the chlorophyll production to 8.4, 13.9, 20.8 and 27.7 μg l^{-1}, respectively. In the absence of chelating capacity supplied through EDTA, chlorophyll yield equalled that of ALL (P5).

Phytoplankton--

Rhizosolenia gracilis was the dominant species at the beginning of this experiment comprising 17% of the population. In the ALL treatment, the phytoplankton standing crop increased from 930 to 30,800 cells ml^{-1}.

Fragilaria capucina predominated in most of the combined nutrient treatments reaching 18,000 cells ml^{-1} or 60% of the assemblage in ALL (P20) in which it grew at an average rate of 0.88 doubling day^{-1}. With reduced concentrations of P in the ALL treatments the relative abundance of *Fragilaria capucina* decreased. The standing crop, however, increased almost exponentially with the addition of P at 1, 3, 5, 10 and 20 μg l^{-1}, which gave 1,652, 3,025, 3,583, 16,126 and 30,880 cells ml^{-1}, respectively.

As with the effect on chlorophyll production, the removal of EDTA, Fe, Si and VT reduced phytoplankton cell counts from 30,800 cells ml^{-1} in the complete treatment to 8,590, 9,100, 8,350, and 16,400 cells ml^{-1}, respectively.

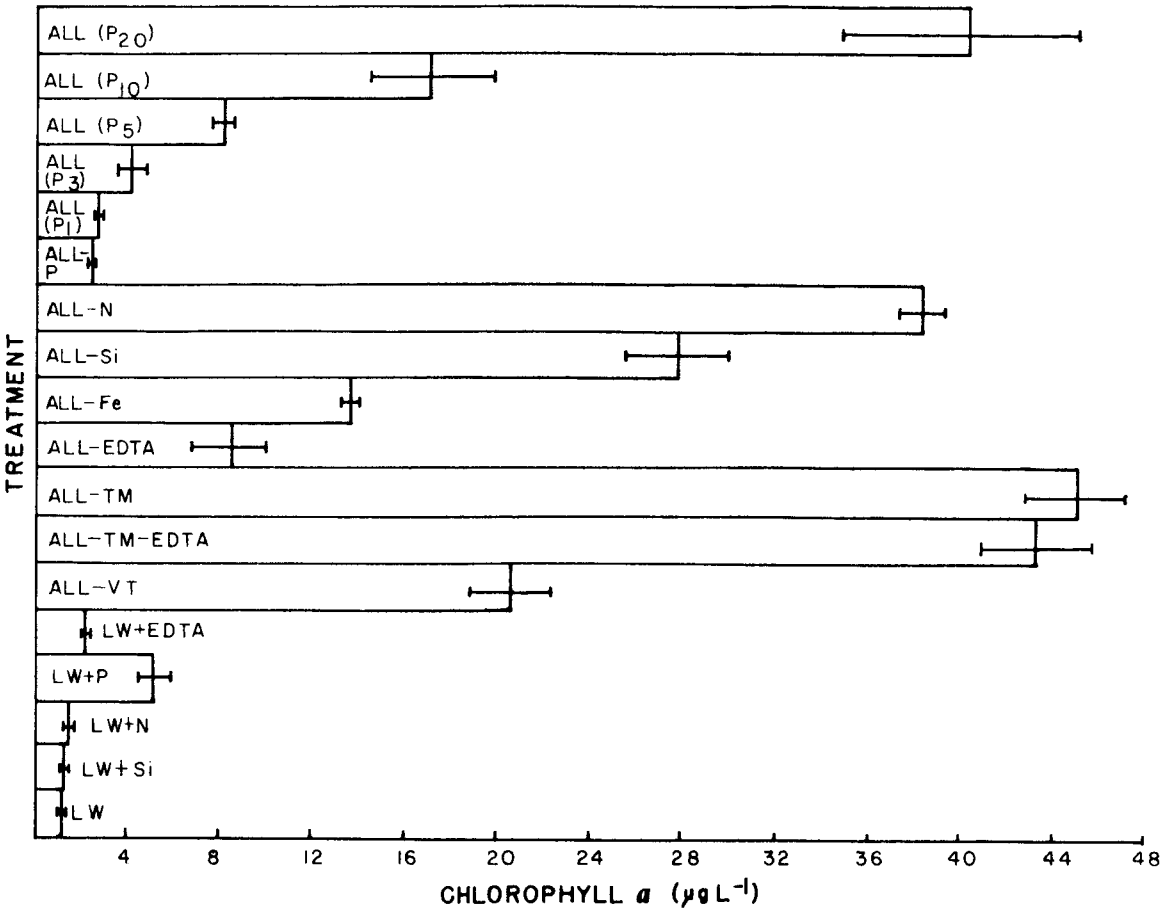

FIG. 8. Experiment period 2-12 June 1975. See Fig. 5 for further explanation.

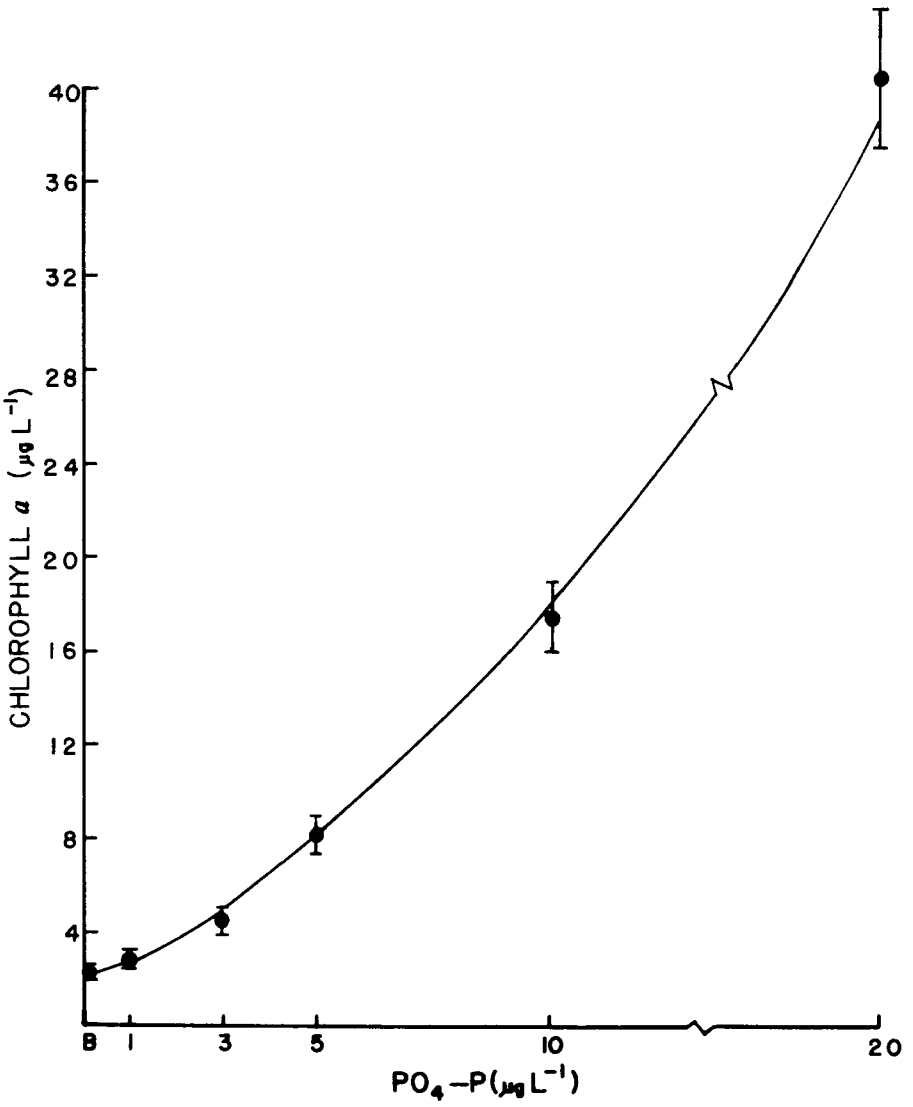

FIG. 9. Chlorophyll *a* production in response to varying phosphate concentrations. Experiment period 2-12 June 1975.

Experiment 4 (1-10 July 1975)

Chlorophyll--

The chlorophyll biomass (0.64 µg l^{-1}) in lake water at the start of the experiment in July was at a seasonal low, but responses to different nutrient enrichments were remarkably large (Fig. 10). In the previous experiments an initial chlorophyll decrease often occurred during the first few days of incubation which was then followed by positive responses in all treatments, including that in the unenriched lake water. In the present experiment, the initial chlorophyll decline did not recover in LW + N, LW + Si or LW + EDTA

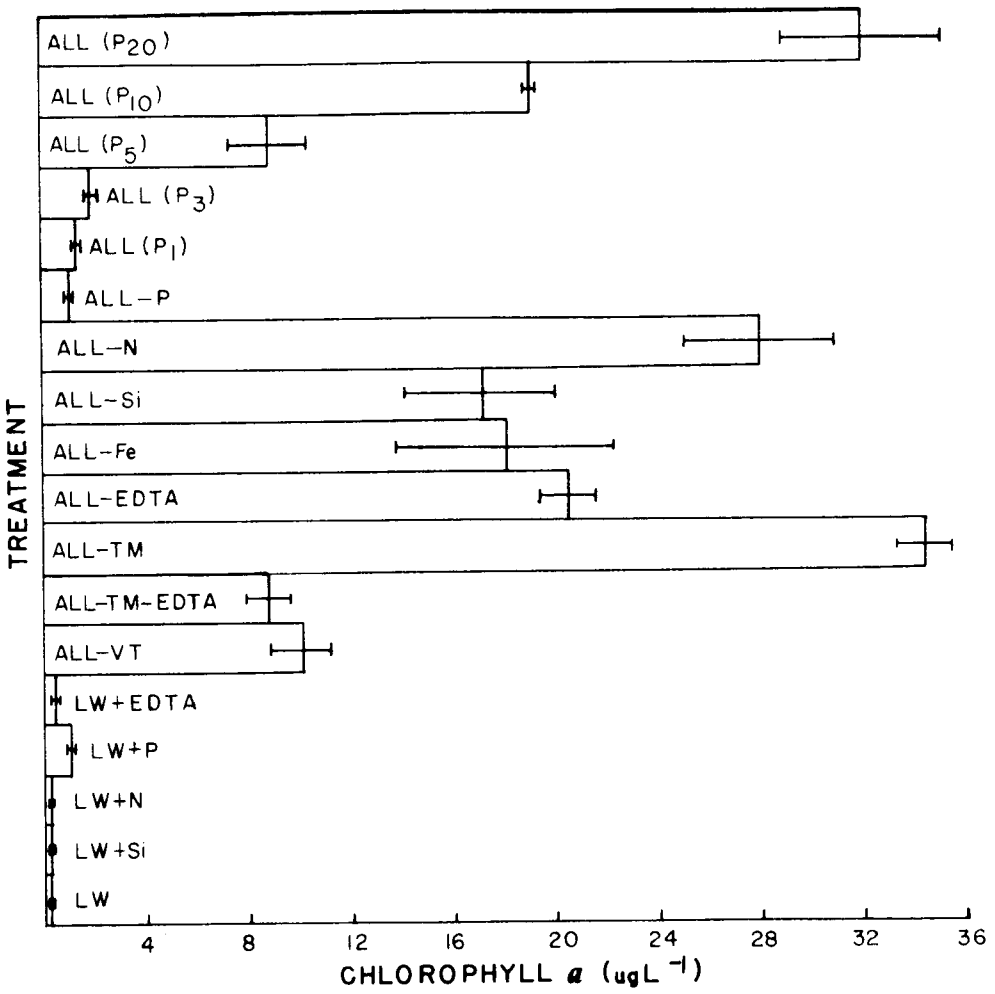

FIG. 10. Experiment period 1-10 July 1975. See Fig. 5 for further explanation.

treatments. The addition of P (LW + P) resulted in a distinct chlorophyll increase from 0.64 to 0.91 μg l^{-1}; it also produced a larger standing crop than the LW control.

Responses to combined nutrient enrichments were substantial--increasing chlorophyll concentration from 0.64 to 30 μg l^{-1}. The maximum chlorophyll yield was reduced by half by eliminating Si, Fe, or EDTA. The removal of TM plus EDTA and EDTA alone caused reduction of chlorophyll yield. As in the previous experiment the treatment ALL-TM yielded the largest response, indicating TM were inhibitory; however, the results of ALL-TM-EDTA and ALL-EDTA indicate the chelating capacity of EDTA was important in producing maximum yields. ALL-VT, like ALL-EDTA and ALL-TM-EDTA, also caused a large reduction in yield.

The fact that the chlorophyll production was similar between LW + P and ALL-P treatments obviously indicated that phosphorus alone had little effect on the growth of phytoplankton, but that other nutrients in the ALL treatment were needed to greatly increase chlorophyll production.

In the ALL treatments with increasing P concentrations, chlorophyll production was not greatly affected at P concentrations of 3 μg l^{-1} or less (Fig. 11). A large increase in yield occurred when the concentration of P was increased from 3 to 5 μg l^{-1}.

Phytoplankton--

The number of species (18) in July was considerably less than in the previous months. Pennate diatoms were reduced in species and cell counts as centric diatoms became dominant. Two species of centrics, *Cyclotella stelligera* and *C. comensis*, accounted for 60% of total population. *Rhizosolenia* spp. and flagellates made up an important subordinate group.

Phytoplankton populations responded to nutrient enrichments in a manner strikingly different from previous experiments, in that immense flagellate blooms were common. In the complete nutrient enrichment, ALL (P20), flagellates increased from < 50 cells to 36,186 ml^{-1}, comprising 64% of the assemblage. Abundant numbers apparently only occurred in the ALL treatments where the P concentration was greater than 10 μg l^{-1}. On the other hand, removal of TM + EDTA and VT which reduced the chlorophyll production compared to ALL (P20) also drastically reduced the flagellates to 2,536 and 1,093 cells ml^{-1}, respectively.

Experiment 5 (23 July-1 August 1975)

Chlorophyll--

The chlorophyll biomass in open lake water remained at its seasonal low, 0.63 μg l^{-1}. Like the previous July experiment, several combined nutrient enrichments resulted in large increases in chlorophyll up to standing crops as large as 40 μg l^{-1}. The initial chlorophyll decline during the incubation period did not return to the initial level in all single nutrient enrichments (LW + Si, LW + N, LW + EDTA); however, concentrations of chlorophyll in LW + P and LW + EDTA treatments were about two times greater than those of control, LW + Si and LW + N (Fig. 12). These results indicate that nutrients in addition to phosphorus were needed for increased growth of phytoplankton.

The maximum response obtained (43.2 μg chl l^{-1}), resulting from ALL (P20), was little affected by deleting Si or N. In other treatments, deletion of Fe, EDTA and VT reduced chlorophyll production to approximately half the maximum value. Deleting TM along with EDTA drastically reduced chlorophyll production to 3.4 μg l^{-1}, an order of magnitude smaller than that of complete medium; but again the effect of removing only TM was slight. The fact that production in ALL-P treatment was greater than that in LW + P indicates that limitation due to other nutrients was more acute than the availability of P. In the ALL treatments concentrations of chlorophyll increased greatly from 5 to 20 μg P liter, but were not affected greatly at 3 μg P $liter^{-1}$ or less (Fig. 13).

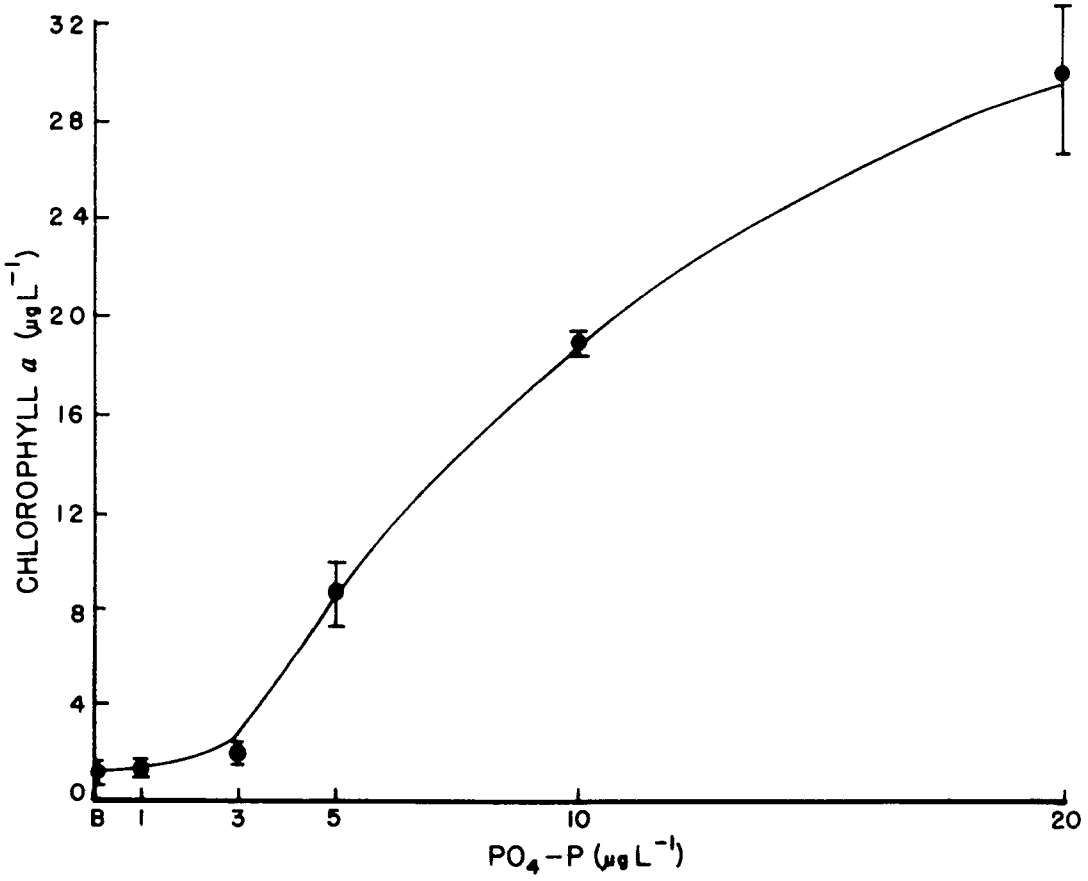

FIG. 11. Chlorophyll *a* production in response to varying phosphate concentrations. Experiment period 1-10 July 1975.

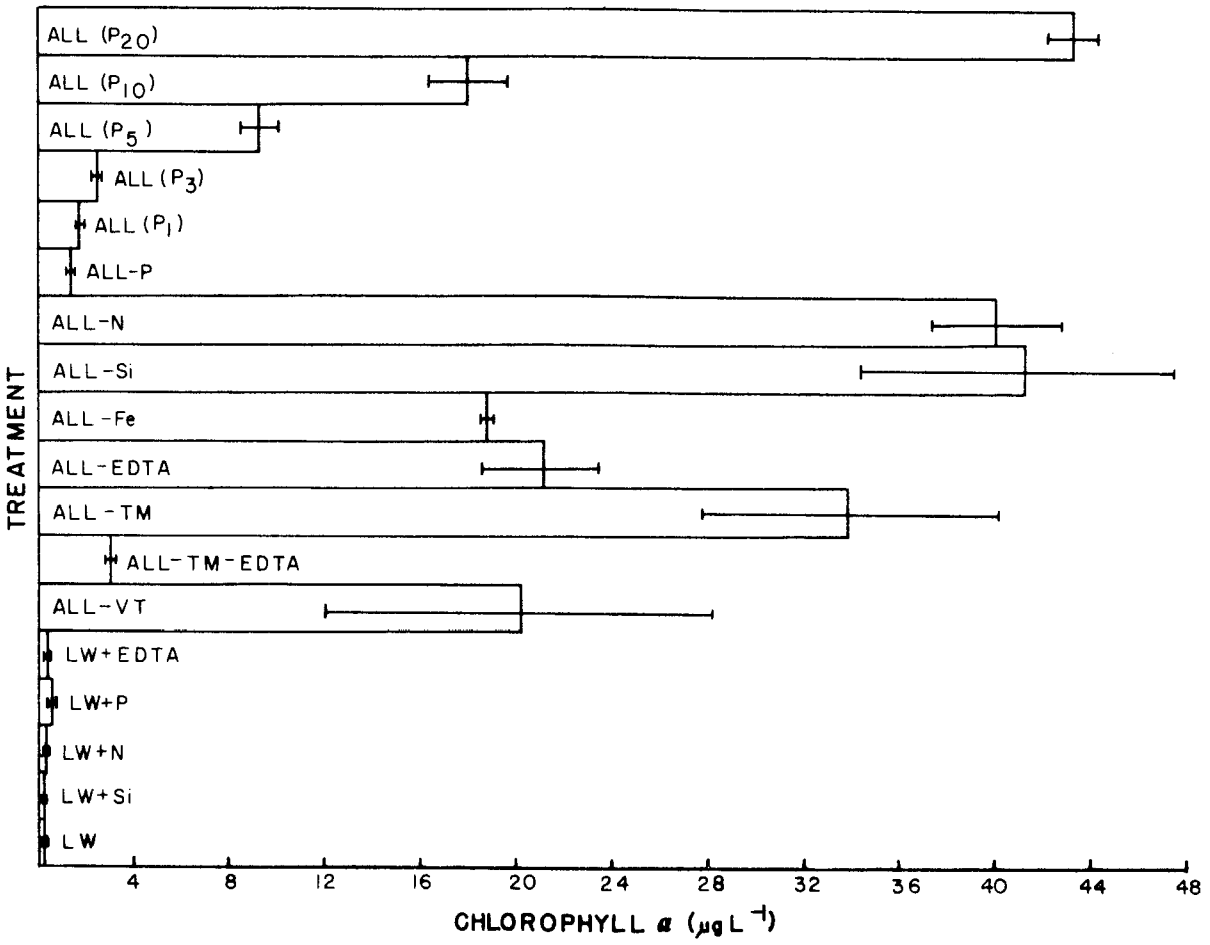

FIG. 12. Experiment period 23 July-1 August 1975. See Fig. 5 for further explanation.

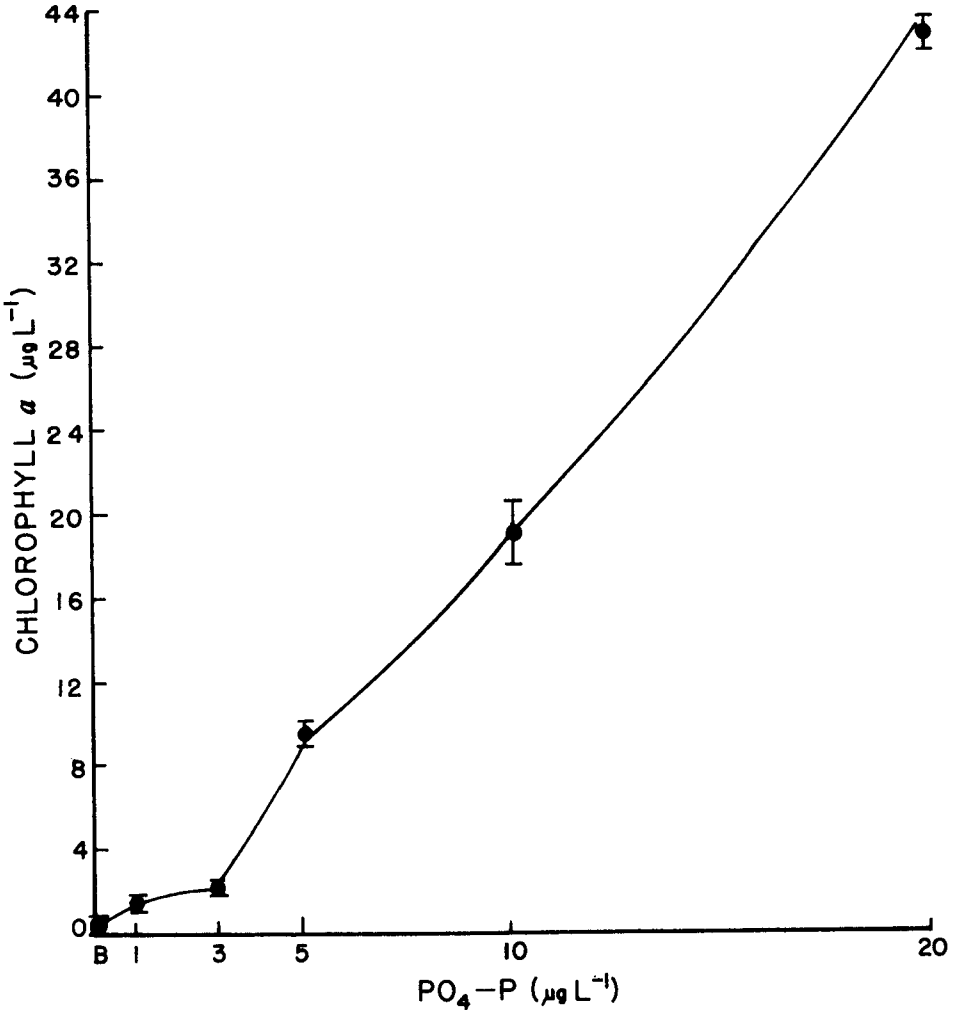

FIG. 13. Chlorophyll *a* production in response to varying phosphate concentrations. Experiment period 23 July-1 August 1975.

Phytoplankton--

Although the phytoplankton standing crop in lake water at the beginning of the experiment was low based on chlorophyll concentration, the total cell numbers, 1,760 cells ml^{-1}, were larger due to the increased abundance of two small centric diatoms, *Cyclotella comensis* and *C. stelligera* comprising 52 and 43% of the assemblage, respectively. Flagellates accounted for 3% of the assemblage and were apparently the next most important component. Only 11 species were identified in samples for this experiment.

In the ALL (P20) enrichment, total phytoplankton counts reached 94,666 cells ml^{-1} of which *Cyclotella stelligera* and flagellates accounted for 86

and 12%, respectively. Those two entitites also retained their absolute dominancy in most of the other nutrient enrichments; however, the removal of individual nutrients in the ALL treatments, except for Si or N, resulted in substantial reductions of standing crop. The most severe reduction was caused by deleting P, TM + EDTA and Fe which resulted in much smaller standing crops of 2,792, 10,146 and 17,872 cells ml^{-1}, respectively.

As P was the controlling limting factor, its addition at 1, 3, 5, and 10 μg l^{-1} with an abundant supply of other nutrients in the ALL treatments increased phytoplankton counts to 5,468, 10,053, 31,183 and 70,697 cells ml^{-1}, respectively. In those communities *Cyclotella stelligera* comprised 64, 76, 84 and 94% of the cell counts, respectively. Although the abundance of *Cyclotella comensis* (911 cells ml^{-1}) was initially more abundant than that of *C. stelligera* (762 cells ml^{-1}), the latter obviously became dominant during the experiments (Table 7). The growth of *C. comensis* was slow except at ALL (P20), but its doubling rate of 0.41 was much less than the 0.75 measured for *C. stelligera* at that concentration.

Flagellates were another important component of the phytoplankton community in this experiment. They responded dramatically to the complete nutrient enrichment, increasing in 9 days from 60 cells ml^{-1} in the initial sample to 11,900 in the ALL (P20) treatment. Unlike diatoms, flagellates were not substantially affected by the treatments ALL-EDTA or ALL-Fe. On the other hand, their growth was severely limited in the absence of EDTA and trace metals (ALL-TM-EDTA) or vitamins (ALL-VT). Eliminating either reduced the flagellate populations to 510 and 3,260 cells ml^{-1}.

Experiment 6 (19-28 August 1975)

Chlorophyll--

As in the July experiments, the initial chlorophyll concentrations remained at the seasonal low, being 0.7 μg l^{-1}. Chlorophyll yield, however, in the ALL (P20) treatment was only 13.0 μg l^{-1}, approximately one-third the concentration in the 23 July experiment (Fig. 14). Among all the treatments, removal of trace metals (ALL-TM) produced the maximum growth. This indicated the background level of trace metals might be high so that addition of these elements was inhibitory to phytoplankton growth at this particular occasion. Although the lake water concentrations of N and Si declined considerably from the previous month, deletion of those nutrients from ALL did not cause a significant decrease of chlorophyll production compared to ALL (P20). Effects of deleting Fe, EDTA and VT were also small.

In this experiment there was no apparent threshold effect at low P concentrations (Fig. 15). Production of chlorophyll appeared to increase with increasing concentrations of P but the large error associated with ALL (P3) would probably mask any threshold effect if one was present.

Phytoplankton--

Very few species of diatoms were observed in the lake water at the beginning of the experiment other than a large population of *Cyclotella comensis* (1,535 cells ml^{-1}) and small populations of *C. comta* and *C. michiganiana*.

TABLE 7. THE EFFECT OF VARIOUS P CONCENTRATIONS IN COMPLETE ENRICHMENTS (ALL) ON THE GROWTH OF THE TWO MOST ABUNDANT SPECIES OF THE 23 JULY 1975 EXPERIMENT. N INDICATES CELL ml^{-1} AND k THE NUMBER OF DOUBLINGS day^{-1}

PO_4-P added ($\mu g\ l^{-1}$)	*Cyclotella comensis* N	k	*Cyclotella stelligera* N	k
1	1,140	0.04	3,514	0.25
3	1,187	0.04	7,703	0.37
5	1,350	0.06	26,389	0.57
10	1,605	0.09	81,378	0.75
20	11,891	0.41	67,090	0.72

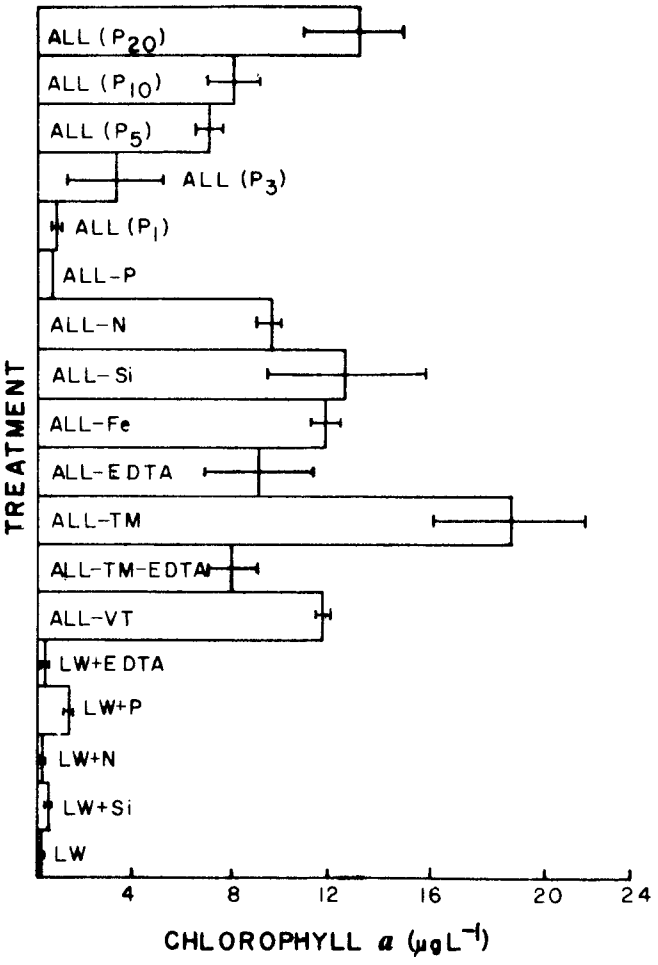

FIG. 14. Experiment period 19-28 August 1975. See Fig. 5 for further explanation.

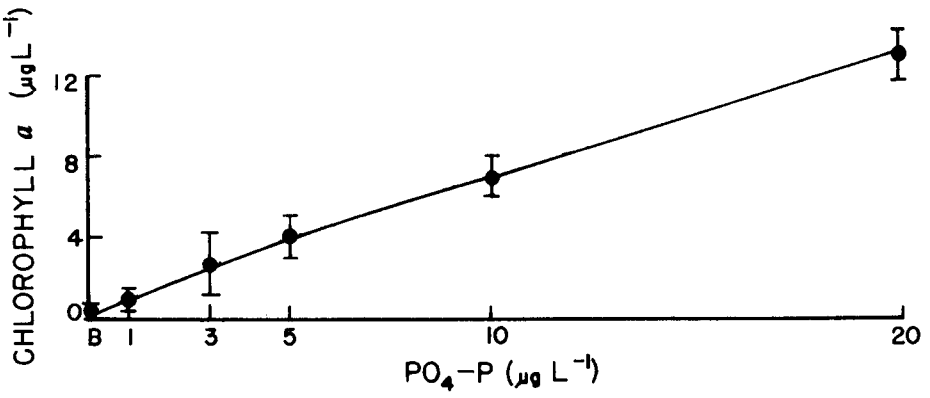

FIG. 15. Chlorophyll *a* production in response to varying phosphate concentrations. Experiment period 19-28 August 1975.

Nutrient enrichment caused distinct changes in species composition. First, when lake water was enriched with N, Si and at low levels of P in ALL treatments (1-5 µg l^{-1}), *C. comensis* remained predominant (> 95%) with small fluctuation in total numbers. Second, ALL treatments, including deletion of N, Si, Fe, and EDTA, increased flagellate populations to densities as large as 13,473 cells ml^{-1}. Flagellates were, however, replaced by *Fragilaria crotonensis* when trace metals or vitamins were deleted. These results suggest that while abundance and species composition of diatom populations are effectively controlled by phosphorus availability, the abundance of flagellates may be increased by trace metals and vitamins.

Experiment 7 (9-18 September 1975)

Chlorophyll--

The chlorophyll production resulting from various nutrient enrichments was similar in magnitude to that of 19 August, except the inhibitory effect of trace metals was not as pronounced as in the previous month (Fig. 16). Removal of N, Si, Fe, EDTA, TM + EDTA and VT from ALL resulted in similar responses, producing two-thirds of the maximum chlorophyll yield obtained in ALL (P20). In comparison, these deletions actually limited yield to a level similar to responses obtained at 10 µg P l^{-1} (ALL P10). What these results indicate is that the nutrients other than phosphorus would not be limiting in the original lake water as long as the enrichment of P is less than 10 µg l^{-1}. The addition of P, when combined with other nutrients in ALL, stimulated growth at low levels of phosphorus but only caused a pronounced effect when P was greater than 5 µg l^{-1} (Fig. 17).

Phytoplankton--

Both the number of species and total cell counts increased two-fold in the initial samples compared with the previous experiment. The increase in

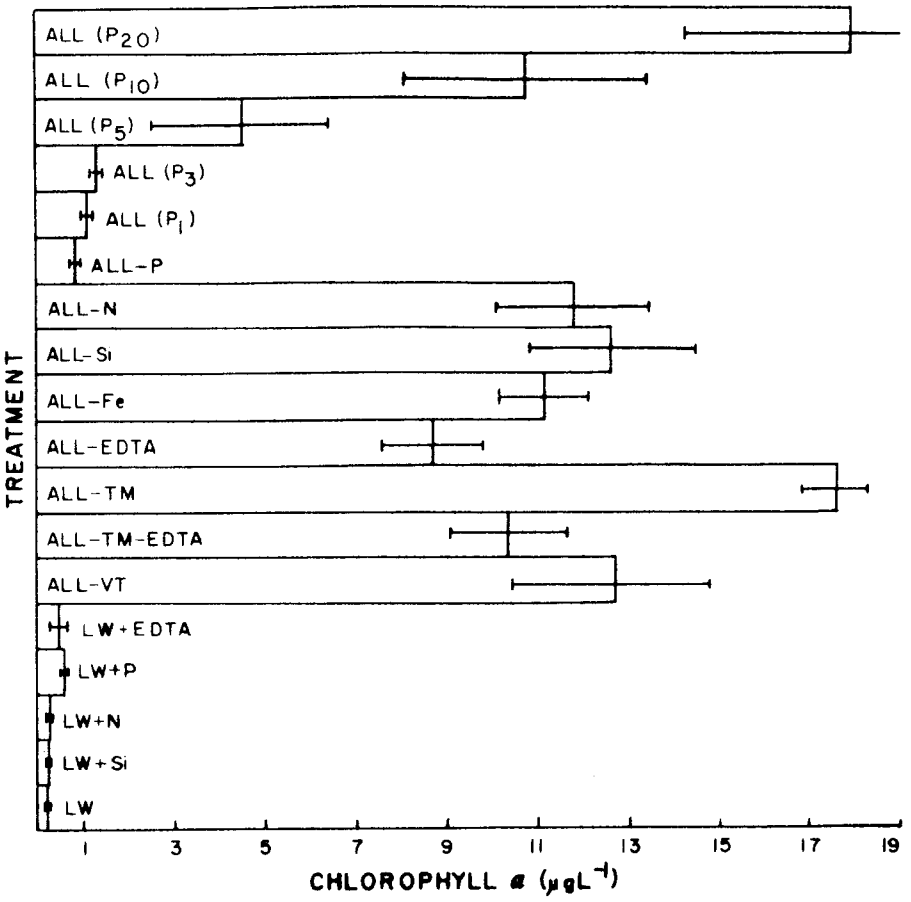

FIG. 16. Experiment period 9-18 September 1975. See Fig. 5 for further explanation.

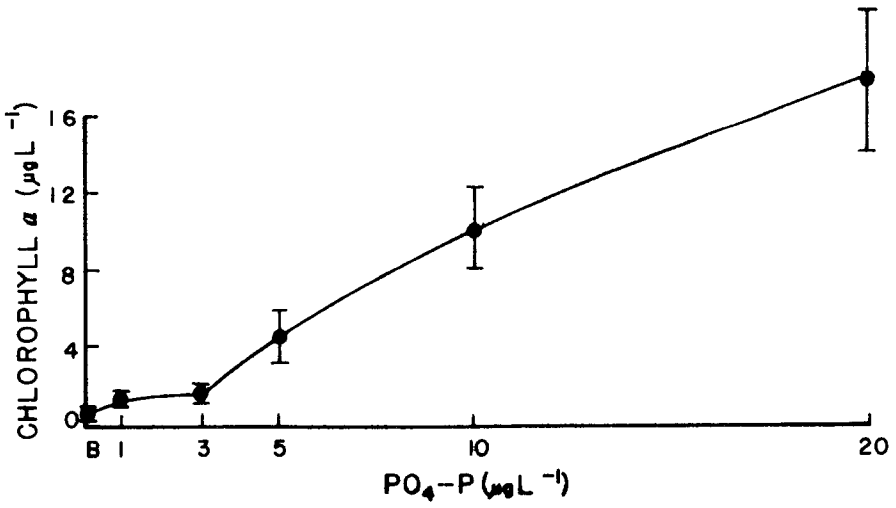

FIG. 17. Chlorophyll *a* production in response to varying phosphate concentrations. Experiment period 9-18 September 1975.

the cell numbers was primarily due to *Cyclotella comensis*, with 2,960 cells ml^{-1}. The number of flagellates accounted for only 3.5% of the population, increasing from the previous 5 to 108 cells ml^{-1} in this experiment.

Response patterns of phytoplankton to nutrient enrichments were similar to those observed in the 19 August experiment.

Flagellate populations increased over two orders of magnitude in treatments ALL (P20) and ALL-Si, ALL-FeEDTA and ALL-TM, with the maximum increase to 33,789 cells ml^{-1} occurring in ALL-Si. The relatively small diatom populations (< 6,000 cells ml^{-1}) on the other hand, were most likely due to silica limitation in the initial assemblage because the silica level in lake water was at the seasonal low (0.15 mg l^{-1}) during this period. Diatoms, however, were dominant in treatments ALL-TM, ALL-EDTA, ALL-VT, and in treatments which were enriched with only one factor. As an initial dominant species, *Cyclotella comensis* remained dominant when lake water was treated with individual nutrients or EDTA, but *Fragilaria capucina* and *Cyclotella stelligera* outnumbered other species of diatoms in treatments ALL-TM-EDTA and ALL-VT, respectively.

Experiment 8 (23 September-2 October 1975)

During initial preparations in the laboratory, ALL-Fe, ALL-TM-EDTA and LW + EDTA were not set up correctly so results of these treatments are not available for this experiment.

In the lake, water temperature was beginning to decrease and the chlorophyll level increased from the seasonal low to 1.34 μg l^{-1}, but the maximum response to nutrient enrichment was less than in the summer experiments (Fig. 18).

Addition of P alone (LW + P) produced greater chlorophyll concentrations than spikes of other elements to lake water, indicating that phosphorus limited phytoplankton growth.

In this experiment, the maximum responses to nutrient enrichment occurred in the ALL (P20), ALL-N, ALL-TM and ALL-VT treatments (Fig. 18). These results indicate that TM was inhibitory because yield was greatly reduced when EDTA was deleted and that vitamins were not essential in producing maximum responses. In previous summer experiments deletion of vitamins had produced yields considerably smaller than the maximum.

Chlorophyll production increased with increasing phosphorus concentration in the ALL treatments with no indication of a threshold effect (Fig. 19).

Experiment 9 (21-30 October 1975)

Chlorophyll--

The chlorophyll biomass in the initial lake water samples was 1.42 μg l^{-1}, a substantial increase from the minimum of 0.64 μg l^{-1} in July and August. In comparison with summer experiments, the maximum chlorophyll yield resulting from nutrient additions was considerably smaller in this experiment (Fig. 20).

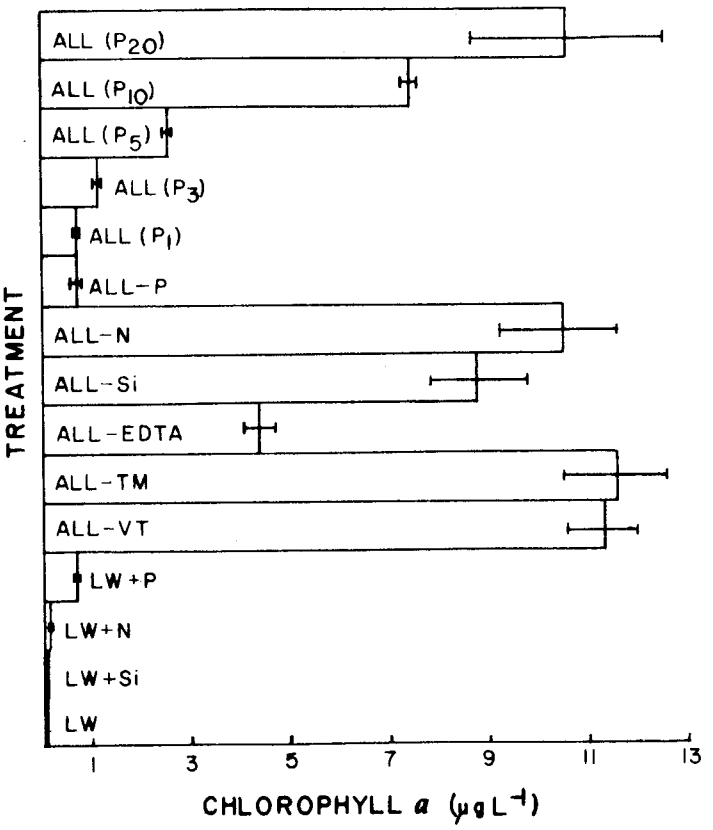

FIG. 18. Experiment period 23 September-2 October 1975. See Fig. 5 for further explanation.

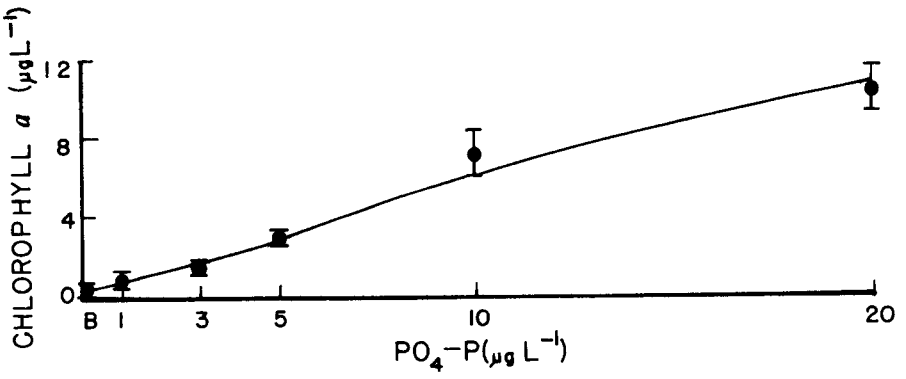

FIG. 19. Chlorophyll *a* production in response to varying phosphate concentrations. Experiment period 23 September-2 October 1975.

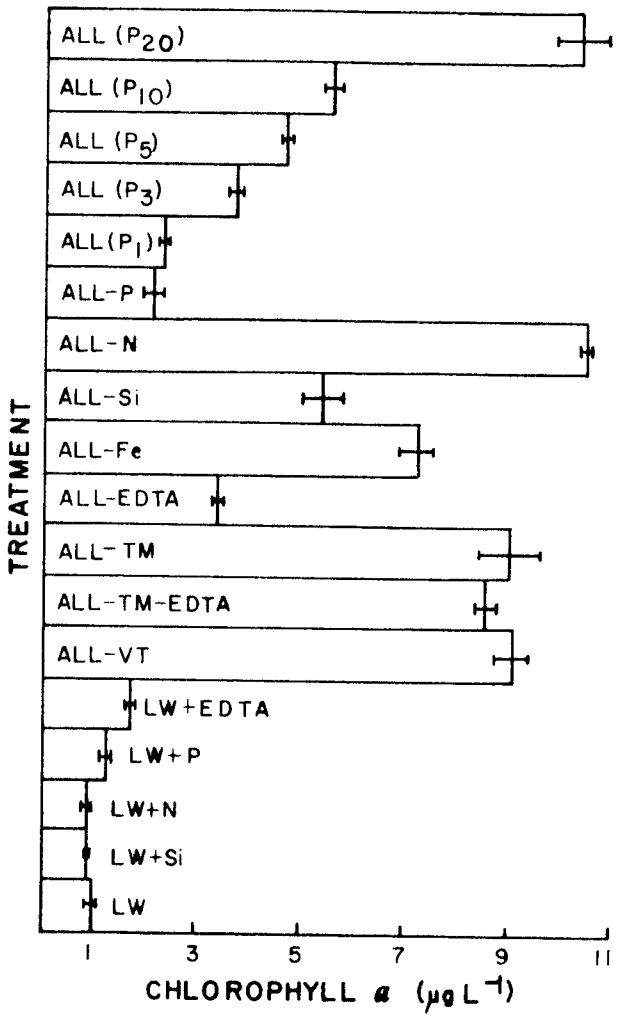

FIG. 20. Experiment period 21-30 October 1975. See Fig. 5 for further explanation.

Among the individual nutrient enrichments (LW treatments), EDTA exerted the greatest effect and P the second largest.

In the ALL (P20) treatment, the chlorophyll standing crop (10.2 µg l^{-1}) was tenfold greater than that in lake water. Removal of TM, TM + EDTA or VT from the ALL treatments produced responses only slightly smaller than the ALL (P20) treatment. ALL-Si and ALL-EDTA treatments reduced the growth to one-half and one-third respectively of the ALL (P20) treatments.

As in previous experiments, the chlorophyll level was progressively greater with increasing P levels (Fig. 21). Chlorophyll yield increased slowly at P levels ranging from 1 to 10 µg l^{-1} and rose sharply at the 10 to 20 µg l^{-1} levels. The drastic growth reduction, due to removal of EDTA (ALL-EDTA), produced an effect that was similar to adding 3 µg P l^{-1}. This means

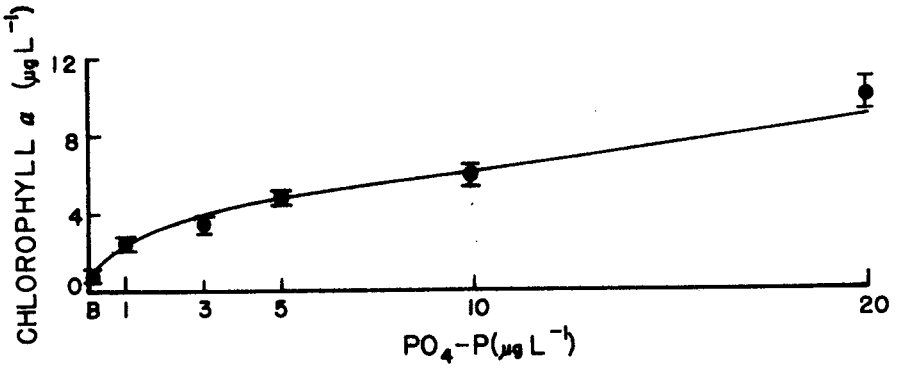

FIG. 21. Chlorophyll *a* production in response to varying phosphate concentrations. Experiment period 21-30 October 1975.

that the chelating capacity of EDTA was needed to enhance chlorophyll production above 3.40 µg l^{-1} under the conditions of the ALL treatment. Part of this effect may have been due to trace metal toxicity as removal of trace metals in the ALL treatment did not affect the maximum response.

Removal of Si and Fe in the ALL treatments also produced smaller responses, reducing chlorophyll concentrations to about half of the maximum.

Phytoplankton--

The natural phytoplankton community was characterized by unispecific dominance and low species diversity. Among the recorded 17 species, *Cyclotella comensis* accounted for 92% of the total count of 3,208 cells ml^{-1}. Flagellates, comprising 4% of the assemblages, were the second most abundant entity. Most of the remaining counts were attributable to colonial green algae.

In the various nutrient enrichments *Cyclotella comensis* retained its absolute dominance. In the ALL (P20) treatment, this taxon increased from the original 2,963 to 35,814 cells ml^{-1}, with an average growth rate at 0.4 doubling day^{-1}. However, population size was severely limited to 2,606, 5,398 and 5,864 cells ml^{-1} by deleting P, EDTA and Si, respectively. In the ALL treatments at different P levels, the growth rate of *Cyclotella comensis* apparently increased with increasing P concentrations.

Experiment 10 (10-19 December 1975)

Chlorophyll--

The chlorophyll level in the natural lake water (LW) was 1.9 µg l^{-1}, which was one of the largest chlorophyll concentrations for initial water samples. Relative responses by phytoplankton, however, in this experiment were very small compared to previous experiments (Fig. 22). Even with the ALL (P20) treatment, chlorophyll increased only to 2.7 µg l^{-1}. Addition of P, EDTA or Si in LW resulted in slight increases in chlorophyll relative to LW.

Production of chlorophyll in the ALL treatments of different P levels was

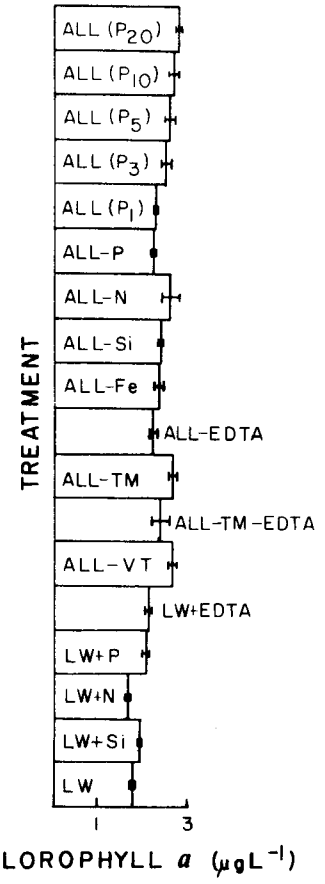

FIG. 22. Experiment period 10-19 December 1975. See Fig. 5 for further explanation.

enhanced little at concentrations greater than 3 µg l^{-1} (Fig. 23). The small amount of chlorophyll production in this experiment probably resulted from low temperature and light regimes under which the effect of nutrients are of secondary importance.

Phytoplankton--

A large number of phytoplankton species (32) were present in the cold water at the initiation of the experiment. The previously dominant species, *Cyclotella comensis*, still maintained its large population (2,869 cells ml^{-1}), which comprised 89% of the community. The second most abundant taxon was *Anabaena* spp., which accounted for approximately 5% of the total cell numbers. The occurrence of this blue-green alga was highly untimely since it normally blooms in eutrophic warm waters. We speculate that it originated from Saginaw Bay where blue-green algae bloomed until late fall.

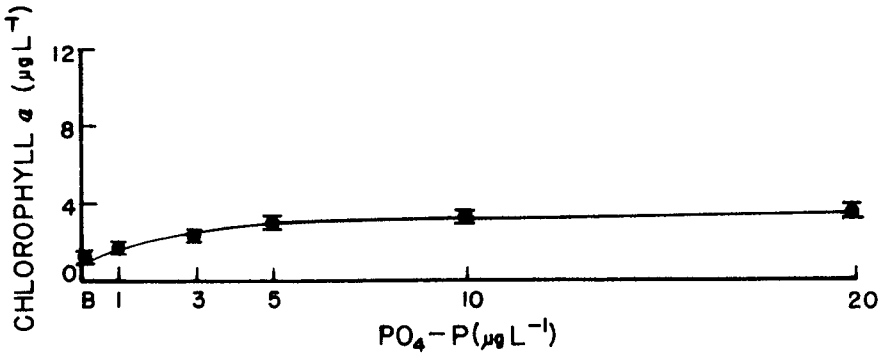

FIG. 23. Chlorophyll *a* production in response to varying phosphate concentrations. Experiment period 10-19 December 1975.

The phytoplankton response to nutrient enrichment was sluggish. Other than *Cyclotella comensis*, which fluctuated between 3,000-6,000 cells ml^{-1} among various nutrient treatments, little change was noticed in other taxa. Unlike earlier experiments, *C. comensis* did not respond positively with increasing P concentration. In fact, the population size in the complete nutrient with 20 µg Pl^{-1} was smaller than at lower P levels.

Seasonal trends of chlorophyll yield as results of various nutrient enrichments fluctuate over a wide range, as indicated by the ratio of final and initial chlorophyll level of the experiment period (Fig. 24). The variation of phosphorus concentration in ALL treatments resulted in growth more or less parallel to the nutrient concentrations, with maximum differential response in July and minima during the beginning and the end of the annual cycle. A similar seasonal trend also occurred in those ALL treatments with individual nutrient deletion, except that in ALL-TM-EDTA where a marked reduction in growth took place in July. In this group of treatments, deleting of P, EDTA, VT and FeEDTA effectively reduced chlorophyll yield as compared to ALL during June through July. Deletion of TM, however, resulted in yield larger than ALL in the 2 June, 1 July and 19 August experiments. Another set of treatments was single spikes of P, EDTA, NO_3 and Si in the lake water. The overall growth response was relatively small in comparison with that of ALL treatments (notice the different scale in Fig. 25). Phosphorus addition produced the largest chlorophyll in most of the experimental periods except that of 23 September and 21 October during which the largest production was due to EDTA addition. In fact, the effect of EDTA addition was also apparent during early summer.

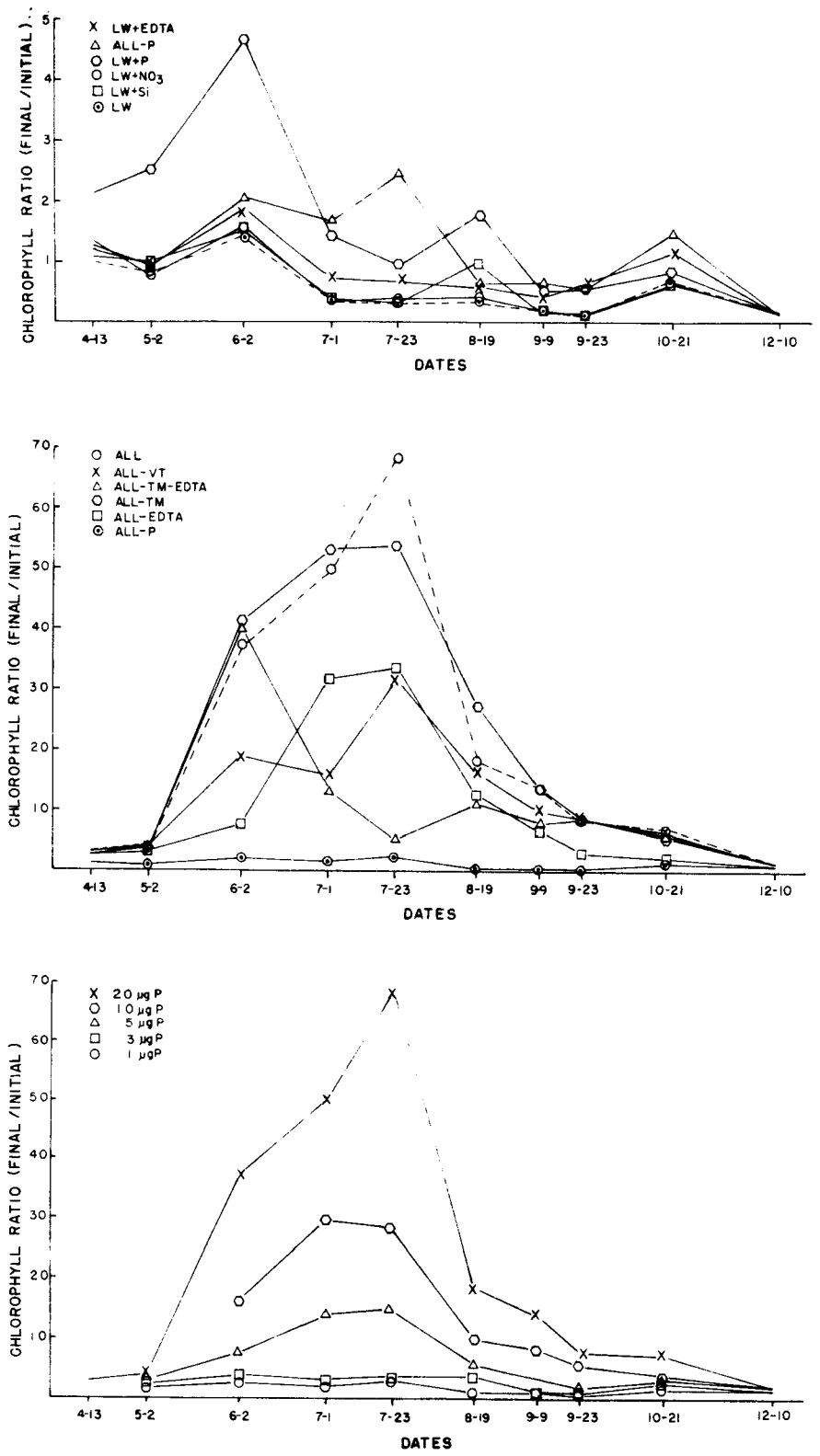

FIG. 24. Seasonal variation in effect of nutrient treatments on chlorophyll production (ratio of chlorophyll *a* values measured in final and initial days of the experiments).

DISCUSSION

The results of the nutrient enrichment experiments can be compared in several different ways. First is evaluating the responses of various treatments relative to the maximum effect obtained as the response in the ALL treatment. This comparison shows the effects relative to what can be termed the maximum standing crop. The second comparison is the effect of deleting various components of the ALL treatment. If the deletion does not decrease the maximum standing crop the substance being tested is considered to have no effect or not to be limiting; however, a decrease in the maximum standing crop can be due either to the substance being limiting or to an interaction between other factors in the treatments. For example, deleting EDTA in some experiments apparently resulted in a decreased response due to inhibitory reactions of trace metals. The final comparison is the effect of adding single substances to lake water, a comparison which can be made to the control, i.e. lake water which received no nutrient treatment, and to ALL treatments in which the factor was either deleted or used at different concentrations.

This study provides data for comparison of nutrient effects from both the ALL treatments and single additions, thereby strengthening conclusions drawn from the results. The ALL-P treatment frequently resulted in larger standing crops of chlorophyll than the LW + P treatment. In these experiments, we must assume that the increased concentrations of other nutrients in the ALL treatment increased the availability of phosphorus naturally occurring in the water which then stimulated phytoplankton growth, or that another factor was also limiting. The large effect of phosphorus additions can be seen by comparing the ALL-P treatment with the other ALL treatments containing different levels of phosphorus. It is also obvious that if the LW + P treatment produces a larger standing crop of chlorophyll than the LW (control), then phosphorus must be limiting in the system. Results of both ALL + P treatments and LW + P treatments clearly indicate that phosphorus additions increased phytoplankton growth.

The levels of phosphorus added in the ALL treatments were related to the size of the standing crop produced. In most experiments the standing crop increased with the level of phosphorus, although there were some exceptions. Most of these exceptions were in experiments that were conducted at low temperature and light. In some of the experiments the addition of 1.0 μg P/liter produced a larger standing crop than the ALL-P treatment, and in all experiments the effect of adding phosphorus was apparent with additions as small as 5 μg P/liter. These results indicate that phosphorus affected the growth rate at very low concentrations; more than 5 μg P/liter were never needed to obtain a response in the ALL treatments. No experiments were conducted on levels of phosphorus in LW treatments.

Additions of phosphorus greater than 5 μg P/liter produced massive standing crops of chlorophyll. With these extreme nutrient enrichments, the resulting chlorophyll concentrations were large enough to be classified in the category of nuisance blooms and certainly would be considered characteristic of highly eutrophic waters. In all experiments, with the exception of 19 August, the ALL + 20 P treatment produced the largest standing crop of chlorophyll.

ALL minus trace metals consistently produced large effects compared to ALL treatments other than ALL + 20 P. On 19 August it produced the largest effect. With the exception of the 21 October and possibly the 23 July experiments, the effect of ALL-TM was as large as the effect for ALL + 20 P or was comparable to the maximum effects obtained. These results clearly indicate that trace metals, with the exception of iron which was added separately, were not needed to stimulate algal growth. It is possible, however, that iron or the Fe-EDTA added in the ALL treatments could have influenced trace metal availability. These effects could not be tested with the experimental design employed.

Results indicate that EDTA was an important factor in stimulating algal growth. LW + EDTA in three experiments produced greater growth than lake water alone, indicating that EDTA increased nutrient availability. Deletion of EDTA in the ALL treatment had a pronounced effect on algal growth, generally producing chlorophyll levels smaller than those for the ALL-TM-EDTA treatment, and indicating that trace metals added without EDTA produced a toxic or inhibitory effect on algal growth. The deletion of Fe (which included EDTA) did not affect algal growth as much as deleting EDTA in the ALL treatments.

Deletion of TM and EDTA in the ALL treatments appeared to produce responses which varied seasonally, with the most pronounced effects occurring in July and August. Results from these two months indicate that growth was reduced when both TM and EDTA were deleted. During the same times, however, the addition of EDTA alone did not increase chlorophyll concentrations over those in the LW control. These results indicate that trace metals may have been limiting during the summer.

In most of the experiments, the deletion of vitamins in the ALL treatment resulted in smaller than the maximum standing crops of chlorophyll. The responses of ALL-VT, however, were as large in all but one experiment as the effect observed for ALL + 10 P.

In general, one can conclude that the effects of Fe-EDTA, EDTA, TM and VT were small in comparison to the effects of phosphorus in the ALL treatments, and deletion of these factors reduced the standing crops of chlorophyll to those observed for additions of either 5 or 10 μg P/liter in ALL treatments. Generally, chlorophyll standing crops produced without these substances were large enough to be classified as excessive or nuisance algal blooms.

Deletion of N in the ALL treatments had little or no effect on production of chlorophyll. Even in the experiments in which this treatment had a smaller effect than the maximum (19 August and 9 September), the standing crop of chlorophyll was as large as that produced in ALL + 10 μg P. The effect of

adding N to LW was even smaller and in no experiment produced standing crops of chlorophyll which exceeded those found in the LW control.

Deletion of SiO_2 also had little effect on the production of chlorophyll. Even though the maximum response was obtained in only two experiments (2 May and 23 July), the concentrations produced on the remaining dates were always at least as large or larger than those in the ALL + 10 P treatment. Deleting silica had a major effect on species composition, clearly reducing the proportion of diatoms in the phytoplankton assemblage, particularly when compared to the ALL treatments with different levels of phosphorus. This effect was most pronounced during the period when silica levels in the lake were minimal.

One of the principal conclusions of this study is that phosphorus added as a single enrichment or deleted from a complete nutrient enrichment had the greatest effect of any treatment on chlorophyll production by phytoplankton. The results of the experiments which support this conclusion agree well with results from other experiments conducted on the upper Great Lakes, Lake Michigan, Lake Superior and Lake Huron which also lead to the conclusion that phosphorus is the main growth-limiting nutrient (Schelske et al., 1978).

SECTION 3

EFFECTS OF LIGHT AND TEMPERATURE

INTRODUCTION

Despite abundant information on species composition and abundance of Great Lakes phytoplankton except Lake Huron, few data have been collected in the winter period due to logistical problems associated with winter sampling. Phytoplankton samples collected in southern Lake Michigan during the ice-free season showed that there were a large number of species which occurred abundantly when the water temperature was at 5°C or less (Stoermer and Ladewski 1976). It is difficult, however, to sort out the effects of temperature and light from nutrient factors under natural conditions. The seasonal change in chlorophyll level and standing crop in Lake Huron clearly indicates increasing trends during the fall and the largest chlorophyll standing crop in December. In early winter the phytoplankton community also was composed of a greater number of species despite decreasing water temperature and intensity of incident light.

Two experiments were conducted to evaluate the effect of light and temperature on phytoplankton growth. The first experiment determined how winter phytoplankton (natural assemblage enriched with nutrients) are affected by various light and temperature regimes. The second experiment involved (1) culturing phytoplankton isolated from the Great Lakes in a defined medium under laboratory conditions, and (2) determining growth rates of three of these species at different light intensities and temperatures.

METHODS

Natural Assemblages

The experiment was designed to determine the effect of light and temperature on the growth of nutrient-enriched phytoplankton. Nine combinations of three light intensities (40, 80 and 160 μEin m^{-2} sec^{-1}) and three water temperatures (5, 10 and 18°C) were used with each combination run in triplicate. In a walk-in growth chamber (Forma Scientific Econoline), three rectangular plexiglass containers (40 x 25 x 25 cm) were placed side by side. Each container, holding ten 250-ml polycarbonate flasks, was a constant temperature water bath with temperature being maintained at the desired level by circulating water through a heating coil or refrigerated bath (Forma Scientific Masterline 2095).

The light source was 24 fluorescent tubes (40-W cool white) that provided a light intensity of 160 μEin m^{-2} sec^{-1} at flask level. To decrease the light level to 80 and 40 μEin m^{-2} sec^{-1}, the flasks were shaded with cone shaped plastic screens. In addition to the nine light and temperature combinations which received nutrient enrichment, an extra flask containing unenriched lake water was placed in each water bath without screens as a control. All treatments were incubated with a light-dark cycle of 13-11 hrs for a period of 10 days during 17-27 March 1976.

The natural phytoplankton samples were obtained from the same location with the same procedures used for the routine bioassay experiments. Precaution was taken to keep the water temperature less than 5°C during transport. Following the routine procedure, aliquots were taken from the lake water sample for analysis of P, N, Si, and chlorophyll, as well as for determinations of the species composition and abundance of phytoplankton. The phytoplankton sample was then used in the light-temperature experiment. Each of the 27 250-ml culture flasks was filled with 150-ml aliquot of lake water and 0.5 ml of each of the nutrient stock solutions (see Table 3) was added, giving the initial nutrient concentrations for P, N and SiO_2 of 39, 602 and 2,108 $\mu g\ l^{-1}$, respectively. Samples were taken from each flask to determine growth response by chlorophyll production at days 4 and 9. The concentrations of P, N and Si in the filtrate samples were also analyzed at days 4 and 9. The species composition and abundance of phytoplankton communities in each treatment were determined at the end of the experiment.

Isolated Species

Techniques used for isolation are described in Handbook of Phycological Methods (Stein 1973). Most commonly, we used one of two procedures: (1) One cell of a selected species was isolated from the natural phytoplankton populations with a micropipette and transferred to 2 ml of liquid medium in a 5-ml culture tube; (2) A sample of mixed phytoplankton species was poured onto agar plates and incubated for about one week. Species that multiplied in colonies were transferred through a series of subcultures on agar to eliminate bacterial contamination and then transferred to liquid culture. While most pennate diatoms could be obtained using either technique, few centric species would grow on agar plates.

All of the initial cultures were incubated in a growth chamber with light intensity at ca. 160 $\mu Ein\ m^{-2}\ sec^{-1}$ in a 12/12 day-night cycle and temperature at 18°C.

Sources for phytoplankton samples were Lake Huron, Saginaw Bay and Lake Michigan. At the beginning, we used modified Chu 14 medium (Patrick 1964) for isolating pennate diatoms, including *Asterionella formosa*, *Fragilaria crotonensis*, *Diatoma tenue* var. *elongatum* and *Tabellaria* sp. Isolates of centric species, however, would not grow in this medium longer than 2-3 weeks. An improved medium FM (Table 8) was therefore developed and proved more suitable for maintaining Great Lakes diatoms in culture. In the new medium, we increased Ca, Mg and HCO_3 concentrations and lowered trace metals. In the original Chu medium (Chu 1942), trace metals were added in concentrations above 1 mg/l, which is likely to inhibit sensitive organisms.

Using the new formulated medium, we isolated and maintained clone cultures of 12 species of Great Lakes planktonic diatoms. The origin of these isolates is listed in Table 9.

To demonstrate the effect of light and temperature on phytoplankton growth, a preliminary experiment was conducted, using clonal cultures of three phytoplankton species that commonly occur in the Great Lakes. These species are *Asterionella formosa*, *Diatoma tenue* var. *elongatum* and *Fragilaria crotonensis*, isolated from either Lake Michigan or Saginaw Bay.

TABLE 8. CHEMICAL COMPOSITION OF IMPROVED CULTURE MEDIUM FOR GREAT LAKES DIATOMS (FM MEDIUM)

Chemical compounds	Concentration	
	mg/l	μg/l
$Ca(NO_3)_2 \cdot 4H_2O$	76.0	
$Na_2SiO_3 \cdot 9H_2O$	50.0	
KCl	20.0	
$MgSO_4 \cdot 7H_2O$	102.0	
$CaCO_3$	10.0	
$NaHCO_3$	160.0	
$CaCl_2 \cdot 2H_2O$	58.7	
K_2HPO_4	4.0	
$FeCl_2 \cdot 6H_2O$	0.968	
$Na_2EDTA \cdot 2H_2O$	2.5	
$ZnCl_2$	0.05	
$CoCl_2 \cdot 6H_2O$	0.01	
$Na_2MoO_4 \cdot 2H_2O$	0.01	
$MnCl_2 \cdot 4H_2O$	0.50	
H_3BO_3	1.00	
$CuSO_4 \cdot 5H_2O$	0.01	
Thiamin · HCl		100.0
Cyanocobalamin		0.5
Biotin		0.5
pH (adjusted with 1 M Tris to 8.5)		

TABLE 9. SPECIES AND ORIGIN OF PLANKTONIC DIATOMS THAT HAVE BEEN ISOLATED AND CULTURED IN SINGLE SPECIES CULTURE

Saginaw Bay
Asterionella formosa
Surirella ovata
Synedra ulna
Fragilaria capucina
Southern Lake Huron (bioassay)
Stephanodiscus alpinus
S. niagarae
Melosira italica
Tabellaria fenestrata
T. flocculosa
Lake Michigan
Diatoma tenue var. *elongatum*
Fragilaria crotonensis
Stephanodiscus tenuis

Separate experiments were carried out to determine the effects of light intensity and the effects of temperature. To obtain light gradients, a frame with four shelves was placed directly underneath a light bank of 24 40-W fluorescent light tubes. The light intensity at each level of the four shelves was adjusted with layers of screens to 15, 40, 120 and 300 μEin m^{-2} sec^{-1}. The experiment was run with continuous illumination at 18°C.

The apparatus for maintaining temperatures was described in the Methods of Section 3 of this report. Growth rates of the three cultured species were determined at 5, 10 and 18°C, with continuous illumination of 160 μEin m^{-2} sec^{-1}. All the cultures were preconditioned to respective light and temperature regime for 2 days before growth measurements were made.

As mentioned earlier, stock cultures of unispecific phytoplankton were maintained at 18°C and 160 μEin m^{-2} sec^{-1}. For light- or temperature-gradient experiments, the exponentially growing stock culture of each species was inoculated into 250-ml Erlenmyer flasks containing 100 ml freshly prepared growth medium. The population density after inoculation normally was about 10^3 cells ml^{-1}. All the experiments were done in triplicate.

To determine growth rates of each species under various light and temperature conditions, small aliquots (5 ml) taken at day intervals 3-4 throughout the experimental period (10-12 days) were used to determine chlorophyll *a* and population density. Cell counts were made as described by Palmer and Maloney (1954) and chlorophyll was determined by the method of Strickland and Parsons (1968). Numbers of doublings for chlorophyll concentration and cell number were calculated as specific growth rates. The maximum growth rate was determined by plotting the growth curve and calculating the steepest slope between two sampling dates.

RESULTS

Natural Assemblage

Table 10 shows the species composition and abundance of phytoplankton in southern Lake Huron lake water samples at the beginning (10 December 1975) and the ending (17 March 1976) of the winter season. The total phytoplankton population in the December sample was 3,242 cells ml^{-1}, declining to 1,426 in March. But the number of species identified increased from 32 to 38 during this period. Diatoms that made up over 90% of the total population were dominated by *Cyclotella comensis* in December. This taxon appeared in great abundance (2,869 cells ml^{-1}) in the early winter and declined drastically through March (626 cells ml^{-1}). However, the substantial decrease in total cell counts did not reduce the chlorophyll level, which, on the contrary, increased from 1.95 to 2.9 μg chl l^{-1} in December and March samples, respectively.

Several diatom species which occurred abundantly in samples collected before December became more or less rare during the early winter period when the phytoplankton was dominated by *Cyclotella comensis*. Those entities which declined were *Asterionella formosa, Cyclotella stelligera, Diatoma tenue* var. *elongatum, Fragilaria capucina, F. crotonensis, Melosira islandica, Synedra filiformis* and *Tabellaria fenestrata*. However, as *Cyclotella comensis* dominance decreased in March, these species again developed significant populations. It is noteworthy that blue-green algae, *Anabaena* and *Oscillatoria* species, also occurred in significant numbers in the December sample. The occurrence of those eutrophic, normally warm-water algae was highly untimely. Most likely, they flushed out of Saginaw Bay where blue-green algae bloomed heavily throughout the fall (Stoermer, personal communication).

Phytoplankton Response to Nutrient Enrichment Under Various Light-Temperature Regimes--

The different light and temperature regimes resulted in significant effects on species composition, population size and chlorophyll production. As shown in Table 11, the increasing light and temperature levels not only increased the species complexity, but also promoted total growth as measured by cell counts and chlorophyll. At the lowest temperature (5°C), however, the effect of varying light intensity was small. It is interesting to note that the effects of light and temperature on phytoplankton growth compensated each other. For example, the population size at 10°C--160 μEin m^{-2} sec^{-1} was similar to that at 18°C--80 μEin m^{-2} sec^{-1}.

In general, both phytoplankton populations and chlorophyll production are influenced positively with increasing light and temperature; but the growth rates for the two parameters show considerable variation for each light-temperature combination. At 5°C, the rate of cellular multiplication was relatively small but was affected greatly by different light intensities. In comparison, chlorophyll was produced at a much higher rate (0.45) and influenced little by light levels at 5°C. The maximum growth rate for both cell number (0.78) and chlorophyll (0.83) occurred at the combination of 10°C and 160 μEin m^{-2} sec^{-1}.

TABLE 10. SPECIES COMPOSITION AND ABUNDANCE OF WINTER PHYTOPLANKTON IN SOUTHERN LAKE HURON

	Dates	
	12-10-75	3-17-76
BACILLARIOPHYTA		
Achnanthes clevei var. *rostrata* Hust.	0	2
A. exigua var. *constricta* (Grun.) Hust.	11	0
Amphora ovalis var. *pediculis* (Kütz.) V.H.	4	2
A. subcostulata Stoerm. and Yang	0	2
Asterionella formosa Hass.	15	54
Coscinodiscus subsalsa Juhl.-Dannf.	4	2
C. comensis Grun.	2869	626
C. comta (Ehr.) Kütz.	4	2
C. michiganiana Skv.	0	19
C. ocellata Pant.	0	9
C. stelligera (Cleve and Grun.) V.H.	19	26
Cymbella subventricosa Cholnoky	2	0
Diatoma tenue var. *elongatum* Lyngb.	11	37
Fragilaria brevistriata var. *inflata* (Pant.) Hust.	2	0
F. capucina Desm.	13	135
F. construens var. *minuta* Temp. and Per.	2	2
F. crotonensis Kitton	11	233
F. intermedia var. *fallax* Grun.	11	5
F. pinnata Ehr.	0	5
M. islandica O. Müll.	2	70
M. italica subsp. *subartica* O. Müll.	0	2
Navicula costulata Grun.	0	2
N. lanceolata (Agardh) Kütz.	0	2
Nitzschia acicularis (Kütz.) Wm. Smith	4	5
N. dissipata (Kütz.) Grun.	0	2
N. kutzingiana Hilse	2	
N. palea (Kütz.) Wm. Smith	0	7
N. recta Hantz.	0	2
N. sigma (Kütz.) Wm. Smith	0	2
Nitzschia questionable sp.	0	2
Rhizosolenia eriensis H. L. Smith	4	7
S. minutus Grun. *ex* Cleve and Möll		2
S. transilvanicus Pant.	4	0
Stephanodiscus sp. #15	0	2
Surirella angusta Kütz.	0	2
Synedra filiformis Grun.	4	30
S. parasitica (Wm. Smith) Hust.	0	2
S. ulna (Nitz.) Ehr.	6	5
Tabellaria fenestrata (Lyngb.) Kütz.	0	61
CHLOROPHYTA		
Scenedesmus bicellularis Chod.	0	2
S. quadricauda (Turp.) Bréb.	2	2
Ankistrodesmus sp.	2	2
Cosmarium sp.	2	0

	Dates	
	12-10-75	3-17-76
CYANOPHYTA		
Anabaena sp.	129	0
Anabaena subcylindrica Borge	23	0
Oscillatoria retzii	13	0
Unidentified flagellate spp.	38	49
Number of species	32	38
Total cells/ml	3242	1427

The total number of species that occurred in the 9 light-temperature combinations in the 9-day culture period was approximately 130, which were apparently latent winter flora. The occurrence of those latent species ranged between 29 and 52 entities among the different combinations of light and temperature.

In spite of the large number of phytoplankton species appearing among the various light and temperature levels, communities were invariably dominated by a few diatom species that were abundant in the field. These species included *Asterionella formosa, Cyclotella comensis, C. stelligera, Diatoma elongatum, Fragilaria crotonensis, F. intermedia* var. *fallax, Nitzschia acicularis, Stephanodiscus alpinus* and *S. minutus*. The growth rates for most of these species were apparently enhanced by the combination of increasing light and temperature (Table 12). *Cyclotella comensis*, the most abundant taxon in the

TABLE 11. AVERAGE GROWTH RATE OF PHYTOPLANKTON CULTURED IN 9 LIGHT-TEMPERAUTRE COMBINATIONS IN 9 DAYS. RATES (r) ARE CALCULATED AS NUMBER OF DOUBLING (CELL NUMBER AND CHLOROPHYLL) PER DAY

Temperature (°C)	Light (μEin $m^{-2}sec^{-1}$)	No. species	Growth rate cell ml	cell r	chlorophyll μg l^{-1}	chlorophyll r
5	40	29	2453	0.09	9.78	0.45
	80	38	4300	0.18	9.77	0.47
	160	31	4917	0.20	9.03	0.45
10	40	41	7395	0.26	15.63	0.47
	80	42	11335	0.33	42.49	0.75
	160	46	18562	0.78	51.59	0.83
18	40	42	6613	0.25	24.48	0.40
	80	47	19526	0.42	72.04	0.76
	160	52	34331	0.51	138.36	0.79

TABLE 12. EFFECTS OF LIGHT AND TEMPERATURE ON SPECIES GROWTH RATE OF ENRICHED WINTER PHYTOPLANKTON

Species	Light (μEin/m^2/sec)	Initial cells/ml	5°C cells/ml	5°C k	10°C cells/ml	10°C k	18°C cells/ml	18°C k
Asterionella formosa	40	54	253	0.25	646	0.40	712	0.41
	80	54	426	0.33	642	0.40	1356	0.52
	160	54	471	0.34	1112	0.49	1496	0.53
Cyclotella comensis	40	626	790	0.04	1247	0.11	648	0.01
	80	626	1215	0.11	1298	0.12	751	0.03
	160	626	1427	0.13	2054	0.19	681	0.01
Cyclotella stelligera	40	26	67	0.15	304	0.39	162	0.29
	80	26	129	0.26	544	0.49	248	0.36
	160	26	98	0.21	854	0.56	453	0.46
Diatoma elongatum	40	37	122	0.19	272	0.32	309	0.34
	80	37	383	0.37	772	0.49	1331	0.57
	160	37	341	0.35	1535	0.60	2371	0.66
Fragilaria crotonensis	40	233	434	0.10	1808	0.33	1598	0.31
	80	233	743	0.18	2406	0.37	4870	0.49
	160	233	1363	0.28	4058	0.46	9152	0.59
Fragilaria intermedia var. *fallax*	40	5	--	--	484	0.73	264	0.63
	80	5	123	0.51	662	0.78	434	0.72
	160	5	84	0.45	176	0.57	623	0.77
Nitzschia acicularis	40	5	72	0.42	623	0.77	758	0.80
	80	5	173	0.56	1617	0.93	2622	1.00
	160	5	177	0.57	2585	1.00	6820	1.15
Synedra filiformis	40	30	116	0.21	400	0.41	295	0.37
	80	30	196	0.30	620	0.48	1782	0.65
	160	30	191	0.29	895	0.54	3564	0.76
Tabellaria fenestrata	40	61	258	0.22	353	0.28	358	0.28
	80	61	122	0.10	500	0.34	637	0.38
	160	61	129	0.10	274	0.24	798	0.41
Stephanodiscus alpinus	40	2	24	0.40	55	0.53	104	0.63
	80	2	19	0.36	211	0.75	393	0.84
	160	2	17	0.34	239	0.77	813	0.96
S. minutus	40	2	22	0.38	35	0.46	55	0.53
	80	2	44	0.49	153	0.69	638	0.92
	160	2	17	0.34	139	0.68	1428	1.05

initial sample, (626 cells ml^{-1}) grew at the lowest rate in all light-temperature combinations. It appears to be a cold water species, whose growth rate at 10°C was one order of magnitude greater than that at 18°C.

In general, there are compensatory effects between light intensity and temperature on the growth rates of most species, especially at light levels above 80 μEin m^{-2} sec^{-1} and 10°C. In the field, the compensatory factors are further complicated by seasonal variation and depth distributions. It is evident that the optimal light-temperature regime for many phytoplankton species exists during the year at some depth in the lake, except during winter, when the water temperature is less than 10°C throughout the water column. However, optimal growth rates of most natural phytoplankton populations are rarely realized in oligotrophic waters where nutrient limitation often overrules the effects of physical factors. Furthermore, phytoplankton populations must acquire specific optimal growth rates in the physical environment through temporal adaptation. In the lake, phytoplankton populations to survive must adapt continuously as cells are sedimented and transported vertically by water movements.

Light-Temperature Effects on Phytoplankton Nutrient Consumption

Consumption rates of P, N and Si varied markedly among the light-temperature treatments. While P was consumed at similar rates at all light-temperature levels, the consumption of N and Si was affected by light and temperature (Table 13). For example, the total amount of P consumed in 5°C-40 and 18°C-160 μEin m^{-2} sec^{-1} was 21.33 $\pm$ 1.25 and 33.74 $\pm$ 0.52 μg l^{-1} respectively. The N consumption under these corresponding conditions were 29.09 $\pm$ 2.70 and 433.54 $\pm$ 16.09 μg l^{-1}. The range in Si consumption under these conditions differed by a factor of seven.

As increasing light intensity and water temperature stimulated greater chlorophyll production proportionally larger amounts of N and P were required, except different light intensities at 5°C had little effect on chlorophyll production and nutrient consumption.

Further analysis of nutrient consumption and corresponding chlorophyll production revealed that the nutrient ratios for chlorophyll productivity varied drastically in different light-temperature regimes (Table 14). The P and Si ratios of nutrient to chlorophyll were consistently higher at the low temperature (5°C) and decreased progressively at 10° and 18°C. At the two upper temperature levels, these ratios decreased as light intensity increased. The N ratio, however, remained relatively constant under all environmental conditions.

TABLE 13. CHLOROPHYLL PRODUCTION AND NUTRIENT CONSUMPTION IN PHYTOPLANKTON CULTURE AT 9 LIGHT-TEMPERATURE COMBINATIONS DURING A 9-DAY PERIOD.

Temperature (°C)	Light ($\mu EinM^{-2}Sec^{-1}$)	Chl *a* production ($\mu g\ l^{-1}$)	Nutrient consumption		
			P ($\mu g\ l^{-1}$)	N ($\mu g\ l^{-1}$)	Si ($mg\ l^{-1}$)
5	40	6.92 ± 0.76	21.33 ± 1.25	29.09 ± 2.70	0.30 ± 0.04
	80	6.93 ± 0.10	22.85 ± 0.53	22.94 ± 8.27	0.31 ± 0.04
	160	6.17 ± 0.19	24.23 ± 1.51	21.92 ± 13.49	0.32 ± 0.05
10	40	12.77 ± 0.12	26.94 ± 0.45	71.69 ± 9.79	0.43 ± 0.04
	80	39.63 ± 3.03	32.10 ± 0.52	139.46 ± 23.93	0.82 ± 0.07
	160	48.73 ± 1.09	32.93 ± 0.59	196.46 ± 18.81	1.16 ± 0.07
18	40	21.62 ± 0.59	25.71 ± 2.71	65.37 ± 3.79	0.54 ± 0.13
	80	69.18 ± 3.56	33.98 ± 0.09	219.39 ± 27.98	1.35 ± 0.07
	160	135.50 ± 11.82	33.74 ± 0.52	433.54 ± 16.09	2.12 ± 0.01

TABLE 14. EFFECTS OF LIGHT AND TEMPERATURE ON RATIOS BY WEIGHT, OF P, N AND Si AS CONSUMED PER UNIT

Temperature (°C)	Light ($\mu EinM^{-2}sec^{-1}$)	Nutrient consumption ($\mu g/\mu g$ ch) P	N	Si	Ratio P:N:S
5	40	3.08	4.20	43.74	1:1.36:14.04
	80	3.30	3.31	43.71	1:1.00:13.25
	160	3.93	3.55	52.79	1:0.90:13.43
10	40	2.11	5.61	33.38	1:2.65:15.82
	80	0.81	3.52	20.72	1:2.84:25.58
	160	0.68	4.04	23.80	1:5.94:35.00
18	40	1.20	3.02	25.04	1:2.68:20.87
	80	0.49	3.17	19.58	1:6.47:39.96
	160	0.25	3.20	15.66	1:12.80:62.64

Isolated Species

Figure 25 shows the growth curves of *Asterionella formosa, Diatoma tenue* var. *elongatum* and *Fragilaria crotonensis* at the three temperature levels. During a 10-day culture period, both population density and chlorophyll production increased exponentially. The growth rate of *Diatoma* sp., however, decreased after the seventh day at higher temperature levels. In most cases growth rates of chlorophyll and population increased with temperature and those two growth parameters were similar for each temperature after three days of culture. Slower growth rates in the initial culture period at the lower temperatures may have resulted from the organisms' acclimation to different temperature levels since the inocula were grown at 18°C. As shown in Table 15, the maximum growth rates of both chlorophyll and the population for the three diatoms were considerably smaller at 5°C than at 10° and 18°C. While the maximum rates for cell division among the three taxa were similar between 10° and 18°C, the rates for chlorophyll increases were slightly higher at 18°C than at 10°C.

TABLE 15. MAXIMUM GROWTH (K_{max}) RATES OF *Asterionella formosa, Diatoma tenue* var. *elongatum* AND *Fragilaria crotonensis* INCUBATED AT 3 TEMPERATURE LEVELS

	Temperature (°C) 5		10		18	
Species	cell	chl *a*	cell	chl *a*	cell	chl *a*
Asterionella formosa	0.6	0.4	1.0	0.8	1.0	1.1
Diatoma tenue var. *elongatum*	0.3	0.6	1.1	0.9	1.0	1.2
Fragilaria crotonensis	0.6	0.5	0.8	0.9	0.9	1.1

The effect of light intensity on the growth patterns of the three cultured phytoplankters is shown in Fig. 26. The results show that the saturation light intensity required for optimal growth is approximately 120 μEin m^{-2} sec^{-1}, and that the higher light intensity of 300 μEin m^{-2} sec^{-1} inhibits chlorophyll production during exponential growth. However, the population growth rates of *Asterionella formosa* and *Diatoma tenue* var. *elongatum* are nearly identical rates at the two upper light levels.

While the specific growth rate of these algae changed throughout the exponential period, the maximum specific growth rate at different light levels also varied (Table 16). *Asterionella formosa*, though reached its maximum growth rate at the highest light intensity, maintained a relatively high cell division rate over a wider light range (40-300 μEin m^{-2} sec^{-1}) than *Diatoma elongatum*, which required higher light levels (> 120 μEin m^{-2} sec^{-1}) for maximum growth rate. *Fragilaria crotonensis*, as shown by chlorophyll doublings per day, grew at the maximum rate at 40 μEin m^{-2} sec^{-1} and at a slower rate at 300 μEin m^{-2} sec^{-1}.

As the light intensity affects chlorophyll and population growth differently, considerable variation in the cellular content of chlorophyll occurred. As shown in Table 17, the cellular chlorophyll content in *Asterionella formosa* and *Diatoma tenue* var. *elongatum* varied from 0.4 to 2.0 and from 1.0 to 3.6 pg $cell^{-1}$ for these respective species. Generally, the content is inversely proportional to the light levels. The largest variation in chlorophyll content occurred between 15 and 300 μEin m^{-2} sec^{-1} on day 9 and is approximately four-fold for *Asterionella* and three-fold for *Diatoma*. It should also be noted that the chlorophyll content of *Asterionella* cell tends to be much less variable at lower light intensity than that at higher light levels throughout the culture period; and it appears to be opposite in *Diatoma*.

Variations in temperature also cause fluctuations in cellular chlorophyll content (Table 18), but to a smaller degree than the light effect. Chlorophyll content ranges from 1.3 to 2.9 pg chl $cell^{-1}$ for *Fragilaria*, from 1.7 to 2.5 for *Diatoma* and from 0.9 to 1.7 for *Asterionella*. These ranges for each species are therefore generally less than two-fold as opposed to three- and four-fold variations observed for the effects of light.

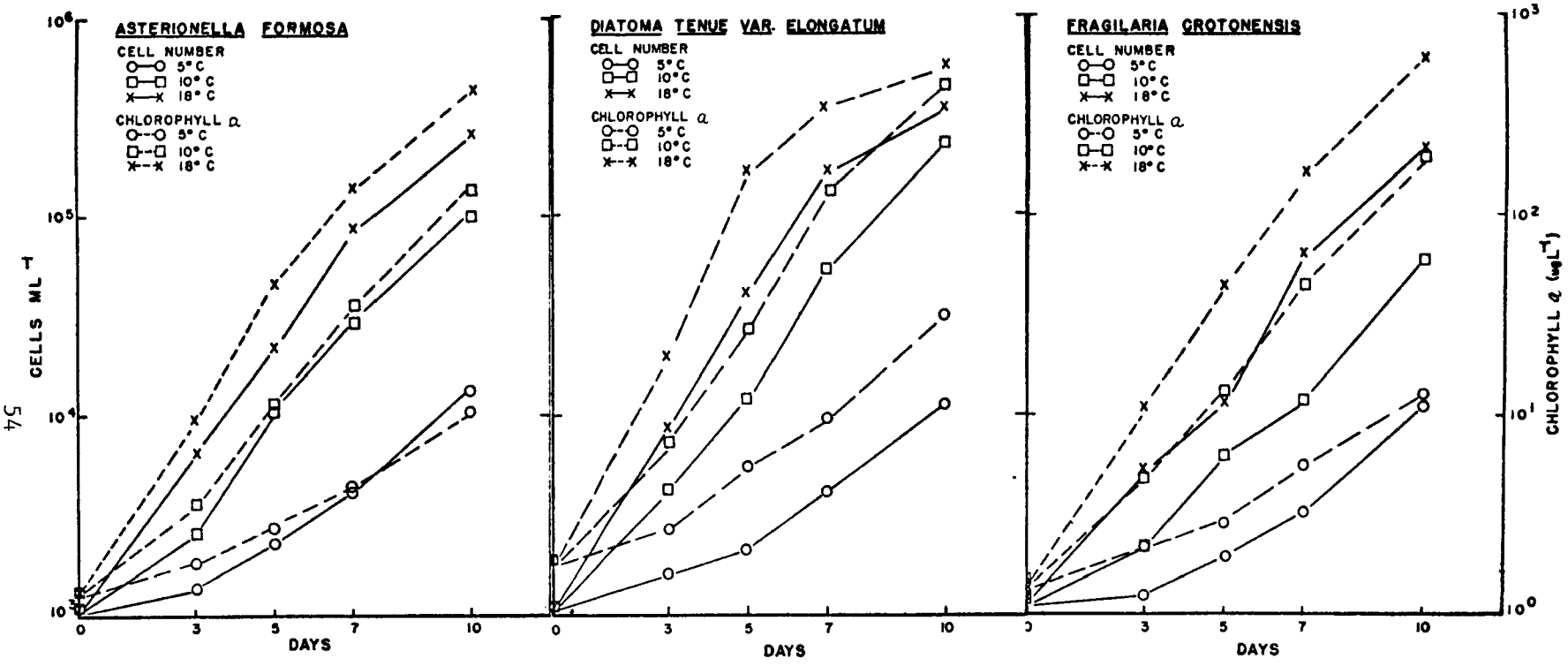

FIG. 25. Effects of water temperature on growth of *Asterionella formosa*, *Diatoma tenue* var. *elongatum* and *Fragilaria crotonensis* in culture. Growth is determined by cell numbers (except for *F. crotonensis*) and chlorophyll *a* concentrations.

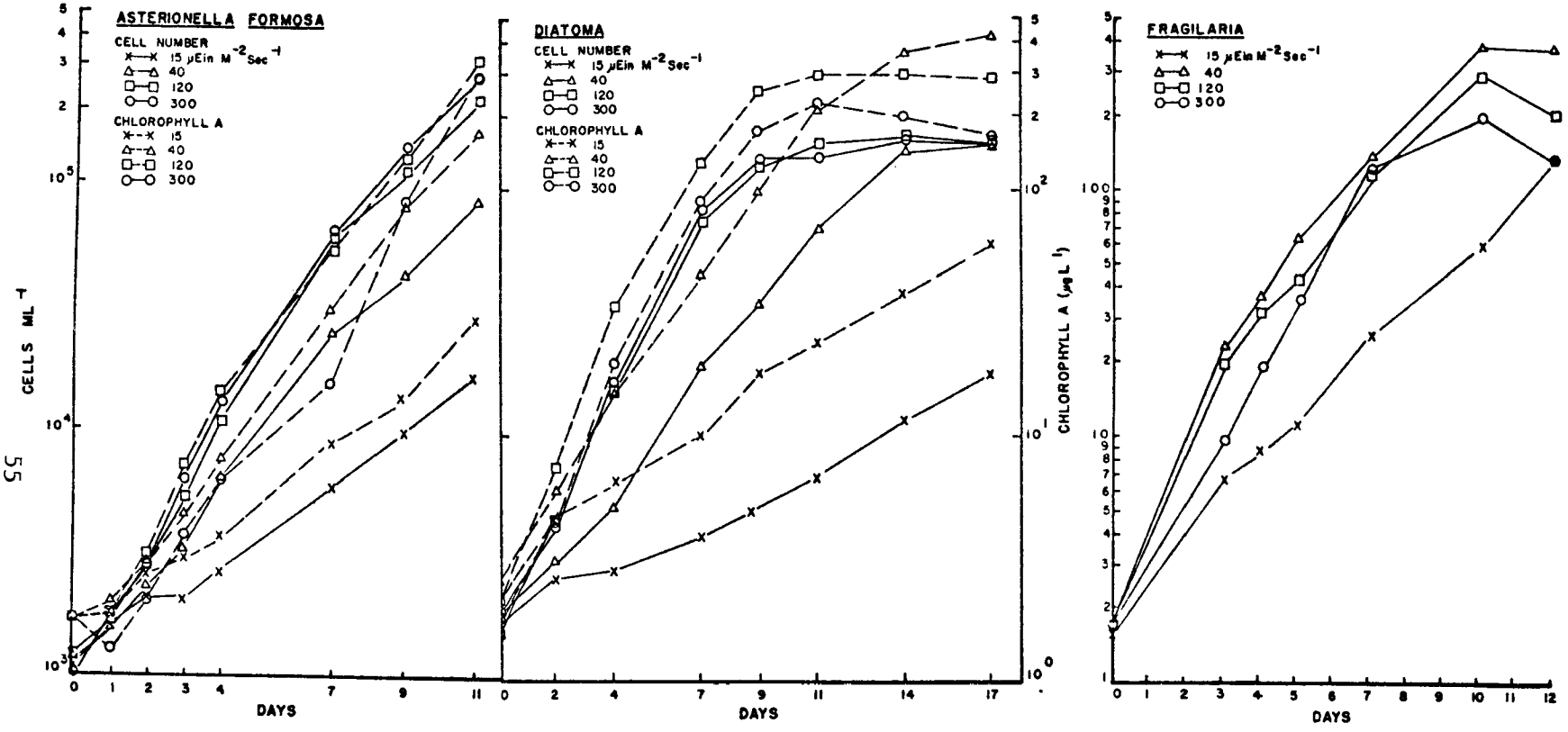

FIG. 26. Effects of light intensity on growth of *Asterionella formosa*, *Diatoma tenue* var. *elongatum* and *Fragilaria crotonensis* in culture. Growth is determined by cell numbers and chlorophyll *a* concentrations.

TABLE 16. MAXIMUM GROWTH RATES (K_{max}) OF *Asterionella formosa*, *Diatoma tenue* var. *elongatum* AND *Fragilaria crotonensis* INCUBATED AT 4 LIGHT LEVELS

	Light ($\mu EinM^{-2}$ sec^{-1})							
	15		40		120		300	
Species	cell	chl *a*	cell	chl *a*	cell	chl *a*	cell	chl *a*
Asterionella formosa	0.5	0.5	0.9	0.7	1.0	1.0	1.2	1.2
Diatoma tenue var. *elongatum*	0.3	0.6	0.6	0.6	0.9	1.0	1.0	1.0
Fragilaria crotonensis	-	0.7	-	1.3	-	1.2	-	0.8

TABLE 17. VARIATION OF CELLULAR CONTENT OF CHLOROPHYLL *a* AS AFFECTED BY DIFFERENT LIGHT INTENSITIES

		Chlorophyll *a* (pg $cell^{-1}$)					
		Days					
Species	Light ($\mu Ein\ m^{-2}sec^{-1}$)	0	2	4	7	9	11
Diatoma elongatum	15	1.3	1.8	2.1	2.5	3.6	3.4
	40	1.3	1.9	2.6	2.3	2.8	2.9
	120	1.4	1.7	2.1	1.7	1.9	1.9
	300	1.0	1.0	1.2	1.1	1.3	1.3
Asterionella formosa	15	1.5	1.2	1.3	1.5	1.8	2.0
	40	1.1	1.3	1.2	1.5	1.9	1.8
	120	1.4	1.1	1.3	0.8	1.1	1.5
	300	1.7	0.7	0.5	0.4	0.5	1.0

TABLE 18. VARIATION OF CELLULAR CONTENT OF CHLOROPHYLL *a* AS AFFECTED BY TEMPERATURE LEVELS

Species	Temperature (°C)	Chlorophyll *a* (pg cell^{-1}) Days 0	3	5	7	10
Fragilaria crotonensis	5	1.3	1.6	1.5	1.8	1.1
	10	1.3	2.3	2.2	2.5	2.9
	18	1.3	1.9	2.6	2.5	2.2
Diatoma elongatum	5	1.7	1.7	2.5	2.2	1.6
	10	1.7	1.8	2.4	1.8	2.0
	18	1.7	2.3	2.4	2.2	1.6
Asterionella formosa	5	1.2	1.3	1.2	1.1	0.9
	10	1.2	1.4	1.1	1.2	1.4
	18	1.2	1.4	1.6	1.5	1.7

DISCUSSION

In temperate lakes, water temperature in the euphotic zone fluctuates over a wide range from season to season, and light also fluctuates seasonally and is attenuated with depth in the water column. It is obvious that the effect of light and temperature in addition to nutrients affect phytoplankton development in the water column. To understand the phytoplankton succession and distribution in the Great Lakes it therefore will be necessary to obtain data not only on nutrient requirements but also on the effects of light and temperature.

The effects of light intensities and temperatures on the growth of phytoplankton assemblages must be evaluated under optimum nutrient conditions. In the present experiment both chlorophyll standing crop and cell counts increased with temperature and light intensity. At 5°C, the effect of light intensity was less than at other temperatures. Species responses in the assemblage were variable. Growth of *Cyclotella comensis*, the dominant population at the beginning of the experiment, increased little compared to other species and was greatest at 10°C. *C. stelligera* also appeared to grow best at 10°C. The majority of species that were present abundantly among various light-temperature treatments, were eurythermal. *Diatoma tenue* var. *elongatum*, *Fragelaria crotonensis*, *Nitzschia acicularis* and *Synedra filiformis* were the dominant populations at the end of the experiment with maximum growth rates ranging from .59 to 1.15 divisions day^{-1}. Phosphorus to nitrogen uptake ratios increased with temperature and with light level at 10 and 18°C as did phosphorus to silica uptake ratios. Production of chlorophyll per unit of phosphorus and silica consumed increased with temperature and with light level at 10 and 18°C.

The effects of light intensity and temperature on the growth of diatoms studied with cultures isolated from the Great Lakes were similar to those of using natural phytoplankton assemblages. Specific growth rates were determined for three species, *Diatoma tenue* var. *elongatum*, *Fragilaria crotonensis*, and *Asterionella formosa*, in separate light and temperature gradient experiments. The saturation light intensity for optimal growth was approximately 1200 μEin m^{-2} sec^{-1} for *Diatoma* and *Asterionella*, and 40 μEin m^{-2} sec^{-1} for *Fragilaria*. Maximum growth rates for all three taxa were similar at 10° and $18^{o}C$, but were significantly reduced at $5^{o}C$. Cellular chlorophyll content, however, was inversely related to light level, but was affected by temperature to a lesser degree. Growth rates from these experiments compared with results obtained from nutrient enrichment bioassays of natural phytoplankton communities indicate that the unialgal isolates of the three species have greater specific growth rates under culture conditions than were obtained from the same species in natural assemblages growing in enriched natural lake water.

Differences in growth rates between the natural phytoplankton assemblages grown in enriched natural lake water and unialgal cultures of phytoplankton isolated and grown in a defined nutrient medium may have resulted for a number of reasons. 1) Natural or "wild" phytoplankton populations may be expected to undergo physiological adaptations as environmental conditions are changed from those existing in natural lake water to those existing in an artificial medium in the laboratory. 2) Isolation into culture inherently selects for the fastest growing individuals of a population, essentially without regard to other fitness factors which would affect the population in the natural environment. 3) Naturally occurring assemblages may be composed of taxa whose optimal growth condition is not present at the time of collection (temperature for instance may not be optimal for growth!). Cultures, on the other hand, are usually specifically adapted to the experimental regimen. 4) Interspecific competition in natural phytoplankton assemblages may produce conditions in which the growth rate of individual populations will be lower than maximal or at a rate less than that which would be obtained if the species were being grown in unialgal culture. Differences due to interspecific competition could result even though nutrient conditions for the experiments with natural assemblages and unialgal populations are identical. Changing the medium and changing other environmental conditions from those existing in nature (including isolation of species into unialgal culture) to those existing in the laboratory therefore may affect the growth rates of phytoplankton species.

SECTION 4

CONCLUSIONS AND RECOMMENDATIONS

Although results of this seasonal study on the effects of nutrient enrichment on the growth of natural phytoplankton assemblages did not single out one limiting nutrient throughout the year, they do clearly point to the critical role of phosphorus enrichment on phytoplankton growth. During part of the year additions of phosphorus alone increased phytoplankton growth, but during July, August and September Lake Huron water had to be enriched with phosphorus plus EDTA and possibly iron or Fe-EDTA to increase the growth of phytoplankton. The importance of increased phosphorus loadings in degrading water quality, however, is not obviated by these results because many sources of phosphorus to lakes, particularly sewage effluents, would include substances that could perform the function of EDTA in stimulating phytoplankton growth if phosphorus concentrations in the receiving waters were increased. Materials such as chelators and vitamins probably enhance the effects of phosphorus on phytoplankton so effects evaluated from addition of phosphorus alone would necessarily be smaller than those from the same quantity of phosphorus in a sewage effluent. Therefore, for realistic evaluation of phosphorus enrichment effects on phytoplankton production it is essential to consider the simultaneous enrichment of multiple limiting nutrients.

In the present study growth of phytoplankton in ALL treatments generally increased with phosphorus additions ranging from 1 to 10 μg P/liter. All these additions represent significant increases over lake levels. An addition of 10 μg P/liter would more than double the total phosphorus concentration in the waters. It is significant that additions of 1 and 3 μg P/liter caused increased standing crops of phytoplankton, further indicating the extreme sensitivity of the system to phosphorus loading, particularly when nutrients and other growth promoting substances are supplied with the phosphorus inputs. Caution is needed in interpreting the above results, because they have been compared to maximum responses, of very large chlorophyll standing crops. Maximum responses produced in many treatments were chlorophyll concentrations obviously in the range which would be considered highly eutrophic. Maximum chlorophyll standing crops were as large as 60 μg/liter or were 50 to 60 times greater than the initial values in lake water. Therefore relatively small increases in these experiments could be quite significant in oligotrophic lakes from the standpoint of water quality problems.

These results of the nutrient enrichment experiments can be extrapolated to events which now occur in Lake Huron. Blooms of phytoplankton are related proportionately to the magnitude of phosphorus loading in southern Lake Huron including Saginaw Bay. With moderate phosphorus enrichments the blooms are dominated by diatoms, but with greater enrichments the proportion of diatoms decreases, particularly during periods of silica depletion in the lake. At higher levels of phosphorus enrichment supplies of other nutrients for phyto-

plankton become limiting, creating conditions conducive for shifting species composition.

There is some evidence from the results indicating trace metals added in low concentrations may inhibit the growth of phytoplankton. Additional experiments designed to test this effect would be needed to verify this relationship. In addition, the effects of trace metals in natural water, like other anthropogenic inputs, should not be evaluated completely from experiments with pure spikes as environmental inputs normally are complex mixtures. The role of trace metals like other nutrients cannot be evaluated in the absence of data on chemical forms and availability of these forms to phytoplankton. Inputs of trace metals would be expected to have a relatively minor effect on water quality.

In these experiments with natural phytoplankton conducted under conditions which simulated seasonal changes in light and temperature, responses of phytoplankton in the winter were much smaller than during the summer. Smaller responses during the winter are due to slower growth rates under the winter conditions. Greater responses would be expected if experimental periods had been extended beyond the eight days used throughout the study.

Responses of natural phytoplankton under experimental treatments were species specific and there were 100 species identified throughout the seasons. These responses are complex, partly due to seasonal changes in species composition and partly due to concomitant changing environmental conditions. The results indicate that differential responses by species must be considered in evaluating the effects of nutrient enrichment.

The dominant species during the study was *Cyclotella comensis*, a diatom which was abundant only from the late summer through winter. It has been characterized as an oligotrophic organism so its dominance indicates an oligotrophic environment in the open waters of southern Lake Huron. Under experimental conditions, large populations of this organism (>8000 cells ml^{-1}) were produced. These large populations were developed under phosphorus enrichments as small as 3 μg P/liter. *C. comensis* apparently grows optimally at about 10°C.

All the results point to the essential need to limit the inputs of phosphorus if control of eutrophication and maintenance or improvement of water quality in southern Lake Huron is the desired goal. There is no evidence that specific measures for controlling inputs of other nutrients should be undertaken. Problems with nitrogen enrichment, limited to experiments with nitrate nitrogen in this study, would result only as secondary effects of increased phosphorus enrichment or loadings, but specific problems with nitrogen enrichment would not be expected from the results of our study.

REFERENCES

Beeton, A. M. 1969. Changes in the environment and biota of the Great Lakes, p. 150-187. *In* Eutrophication: causes, consequences, correctives. Washington: Nat. Acad. Sci.

Brown, T. E. and F. L. Richardson. 1968. The effect of growth environment on the physiology of algae: light intensity. J. Phycol. 4: 38-54.

Carlucci, A. F. and P. M. Bowes. 1972. Determination of vitamin B_{12}, thiamine and biotin in Lake Tahoe waters using modified marine bioassay techniques. Limnol. Oceanogr. 17: 774-777.

Chu, S. P. 1942. The influence of the mineral composition of the medium on the growth of planktonic algae. J. Ecol. 30: 284-325.

Davis, C. O., C. L. Schelske and R. G. Kreis, Jr. In preparation. Nutrient and phytoplankton distributions in the nearshore waters of Lake Huron during spring thermal bar conditions.

Delumyea, R. G. and R. L. Petel. 1977. Atmospheric inputs of phosphorus to southern Lake Huron, April-October 1975. U.S. Environmental Protection Agency, Duluth, Minnesota, Rep. No. EPA-600/3-77-038. 53 p.

Gerloff, G. C. and G. P. Fitzgerald. 1975. The nutrition of Great Lakes *Cladophora*. U.S. Environmental Protection Agency, Grosse Ile, Michigan. Mimeo. 110 p.

Goldman, C. R. 1972. The role of minor nutrients in limiting the productivity of aquatic ecosystems, p. 21-38. *In* G. E. Likens (ed.), Nutrients and eutrophication: the limiting nutrient controversy. Am. Soc. Limnol. Oceanogr., Spec. Symp. 1.

Holland, R. E. 1965. The distribution and abundance of plankton diatoms in Lake Superior. Proc. 8th Conf. Great Lakes Res., Univ. Michigan, Great Lakes Res. Div. Publ. 12: 96-105.

International Joint Commission. 1976. The waters of Lake Huron and Lake Superior. Vol. 2, preprint. Report by the Upper Lakes Reference Group, Windsor, Ont. Mimeo.

Kirk, J. T. O. and R. A. E. Tilney Bassett. 1967. The plastids. London: W. H. Freeman and Co.

Kok, B. 1956. On the inhibition of photosynthesis by intense light. Biochim. Biophys. Acta 21: 234-244.

PAAP. 1969. Provisional algal assay procedure. Joint Industry/Government Task Force on Eutrophication. U.S. Department of Interior. 62 p.

Palmer, C. M. and T. E. Maloney. 1954. A new counting slide for nanoplankton. Am. Soc. Limnol. Oceanogr., Spec. Publ. 21: 1-6.

Provasoli, L. and A. F. Carlucci. 1974. Vitamins and growth regulators, p. 741-787. *In* W. D. P. Stewart (ed.), Algal physiology and biochemistry. Univ. Calif. Press.

Patrick, R. 1964. Tentative method of test for evaluating inhibitory toxicity of industrial waste waters. Am. Soc. Testing and Materials, Philadelphia, Pa. D2037-64T. pp. 517-525.

Schelske, C. L. 1975. Silica and nitrate depletion as related to rate of eutrophication in Lakes Michigan, Huron and Superior, p. 277-298. *In* A. D. Hasler (ed.), Coupling of land and water systems. Springer-Verlag New York, Inc.

_____, L. E. Feldt, M. A. Santiago and E. F. Stoermer. 1972. Nutrient enrichment and its effect on phytoplankton production and species composition in Lake Superior. Proc. 15th Conf. Great Lakes Res.: 149-165. Internat. Assoc. Great Lakes Res.

_____ and J. C. Roth. 1973. Limnological survey of Lakes Michigan, Superior, Huron and Erie. Great Lakes Research Division, Univ. Michigan, Publ. No. 17. 108 p.

_____, E. D. Rothman and M. S. Simmons. 1978. Comparison of bioassay procedures for growth-limiting nutrients in the Laurentian Great Lakes. Mitt. Internat. Verein. Limnol. 21: 65-80.

_____, E. D. Rothman, E. F. Stoermer and M. A. Santiago. 1974. Responses of phosphorus limited Lake Michigan phytoplankton to factorial enrichments with nitrogen and phosphorus. Limnol. Oceanogr. 19: 409-419.

_____ and E. F. Stoermer. 1971. Eutrophication, silica and predicted changes in algal quality in Lake Michigan. Science 173: 423-424.

Smayda, T. J. 1974. Bioassay of the growth potential of the surface water of lower Narragansett Bay over an annual cycle using the diatom *Thalassiosira pseudonana* (oceanic clone, 13-1). Limnol. Oceanogr. 19: 889-901.

Stein, J. R. (ed.) 1973. Handbook of phycological methods. London: Cambridge Univ. Press. 448 p.

Stoermer, E. F., M. M. Bowman, J. C. Kingston and A. L. Schaedel. 1975. Phytoplankton composition and abundance in Lake Ontario during IFYGL. U.S. Environmental Protection Agency, Corvallis, Oregon. 373 p.

Stoermer, E. F. and T. B. Ladewski. 1976. Apparent optimal temperatures for the occurrence of some common phytoplankton species in southern Lake Michigan. Great Lakes Research Division, Univ. Michigan, Publ. No. 18. 49 p.

Strickland, J. D. H. and T. R. Parsons. 1968. A practical handbook of seawater analysis. Bull. Fish. Res. Bd. Canada, No. 167. 311 p.

Thomas, W. H. 1969. Phytoplankton nutrient enrichment experiments off Baja, California and in the eastern equatorial Pacific Ocean. J. Fish. Res. Bd. Canada 25: 1133-1145.

Vollenweider, R. A. (ed.) 1969. A manual on methods for measuring primary production in aquatic environments. F. A. Davis Co., Philadelphia. 213 p.

TECHNICAL REPORT DATA
(Please read Instructions on the reverse before completing)

1. REPORT NO. EPA-600/3-79-049	2.	3. RECIPIENT'S ACCESSION NO.
4. TITLE AND SUBTITLE EFFECTS OF NUTRIENT ENRICHMENT, LIGHT INTENSITY AND TEMPERATURE ON GROWTH OF PHYTOPLANKTON FROM LAKE HURON		5. REPORT DATE October 1979 issuing date
		6. PERFORMING ORGANIZATION CODE
7. AUTHOR(S) C. Kwei Lin and Claire L. Schelske		8. PERFORMING ORGANIZATION REPORT NO.
9. PERFORMING ORGANIZATION NAME AND ADDRESS Great Lakes Research Division, Great Lakes and Marine Waters Center, University of Michigan, Ann Arbor, MI 48109		10. PROGRAM ELEMENT NO.
		11. CONTRACT/GRANT NO. R 800965
12. SPONSORING AGENCY NAME AND ADDRESS Environmental Research Laboratory - Duluth, MN, Office of Research and Development, U.S. Environmental Protection Agency, Duluth, Minnesota 55804		13. TYPE OF REPORT AND PERIOD COVERED Final Report - 5/1/73-10/31/76
		14. SPONSORING AGENCY CODE EPA/600/03

15. SUPPLEMENTARY NOTES

16. ABSTRACT

This report contains a seasonal study on effects of nutrient enrichment, light and temperature on the growth of natural phytoplankton and three species of cultured diatoms. Natural phytoplankton assemblages collected monthly from April to December 1975, in southern Lake Huron were used for ten sets of bioassays by adding nutrients in 18 combinations directly to lake water samples. Nutrients tested were phosphorus, nitrogen, silica, EDTA, trace metals and vitamins. Responses to different treatments evaluated by chlorophyll production and cell counts were complex and varied seasonally. Nitrogen had the least effect and phosphorus the greatest effect on chlorophyll production. Silica deleted from a complete enrichment usually had a relatively small effect on chlorophyll production but did affect the proportion of diatoms. Deletion of EDTA and Fe-EDTA reduced chlorophyll production greatly in comparison to the complete treatment. Deleting trace metals had a small effect, but deleting trace metals and EDTA reduced chlorophyll production significantly during the summer. Growth of winter phytoplankton increased with temperature and light intensity with most species being eurythermal, except *Cyclotella comensis* and *C. stelligera* which grew best at 10°C. Uptake ratios of P, N and Si varied with temperature and light. Specific growth rates for three diatoms, *Diatoma tenue* var. *elongatum*, *Fragilaria crotonensis* and *Asterionella formosa*, isolated from the Great Lakes were determined in separate light and temperature gradient experiments.

17. KEY WORDS AND DOCUMENT ANALYSIS

a. DESCRIPTORS	b. IDENTIFIERS/OPEN ENDED TERMS	c. COSATI Field/Group
Nutrients, phytoplankton Primary Biological Productivity	Lake Huron	06 F

18. DISTRIBUTION STATEMENT RELEASE TO PUBLIC	19. SECURITY CLASS *(This Report)* Unclassified	21. NO. OF PAGES 76
	20. SECURITY CLASS *(This page)* Unclassified	22. PRICE

EPA Form 2220-1 (9-73)

☆ U.S. GOVERNMENT PRINTING OFFICE: 1979 -657-146/5477