United States
Environmental Protection
Agency

Office of Water
Program Operations (WH-546)
Washington DC 20460

EPA 430/9-84-005
June 1984

EPA

Financial Management System for Publicly-Owned Treatment Works (Accounting Options)

U.S. ENVIRONMENTAL PROTECTION AGENCY
OFFICE OF WATER PROGRAM OPERATIONS
CONTRACT NUMBER 68-01-6591

FINANCIAL MANAGEMENT SYSTEM FOR PUBLICLY OWNED TREATMENT WORKS (ACCOUNTING OPTIONS)

JUNE 1984

ACKNOWLEDGEMENTS

This publication was funded under contract 68-01-6591 from the United States Environmental Protection Agency (U.S. EPA). This contract was awarded to Gannett, Fleming, Corddry and Carpenter, Inc. and the contract was managed by the Office of Water Program Operations, U.S. EPA.

The Project Officer, Walter DeRieux, wishes to extend sincere appreciation to the following members of the peer review panel for taking time from their busy schedules to review this publication. These peer reviewers were:

- Robert Brams, Illinois EPA, Springfield, Illinois.
- George Gray, U.S. EPA, Washington, DC.
- Edwin Horn, Jr., U.S. EPA, Region V, Chicago, Illinois.
- Robert Wood, Department of Public Works, Howard County, Maryland.
- John Woodcook, Prince William County Service Authority, Virginia.

The statements, conclusions and recommendations contained herein are not to be construed as setting forth any legal or regulatory requirement and do not necessarily reflect the views of the U.S. Government or the U.S. EPA.

TABLE OF CONTENTS

	PAGE
PART ONE	
I. EXECUTIVE SUMMARY	I-1
II. INTRODUCTION	II-1
A. Purpose of the Manual	II-1
B. Organization of the Manual	II-6
C. System Overview	II-10
1. Introduction	II-10
2. Accounting	II-10
3. Replacement Reserve	II-16
4. Revenue Generation	II-16
5. Budgeting	II-17
6. Planning	II-18
7. Implementation of a Computer-Based System	II-19
PART TWO	
III. ACCOUNTING	III-1
A. Overview	III-1
B. Activities	III-12
1. General Accounting (P-1)	III-12
2. Facilities Inventory (P-2)	III-14
3. Customer Billing (P-3)	III-17
4. Payroll - Personnel (P-4)	III-18
5. Purchasing (P-5)	III-19
IV. REPLACEMENT RESERVE	IV-1
A. Overview	IV-1
B. Activities	IV-8
1. Equipment Life and Depreciation (P-6)	IV-9
2. Annual Replacement Reserve (P-7)	IV-12

TABLE OF CONTENTS

(Continued)

		PAGE
PART THREE		
V.	REVENUE GENERATION	V-1
	A. Overview	V-1
	B. Activities	V-7
	1. Revenue Requirements (P-8)	V-7
	2. Service Area Analysis (P-9)	V-8
	3. User Charge Rate Setting (P-10)	V-9
VI.	BUDGETING	VI-1
	A. Overview	VI-1
	B. Activities	VI-6
	1. Revenue Analysis (P-11)	VI-6
	2. Operations Performance (P-12)	VI-7
	3. Expenditure Analysis (P-13)	VI-8
	4. Budget Implementation (P-14)	VI-8
	5. Cash Flow Forecasts (P-15)	VI-10
VII.	PLANNING	VII-1
	A. Overview	VII-1
	B. Activities	VII-5
	1. Population Statistics (P-16)	VII-5
	2. Service Area Financial Ability Analysis (P-17)	VII-6
	3. Performance Analysis (P-18)	VII-10
	4. Budget Planning (P-19)	VII-11

TABLE OF CONTENTS
(Continued)

	PAGE
PART FOUR	
VIII. GENERAL SYSTEM REQUIREMENTS	VIII-1
A. Introduction	VIII-1
B. Implementation	VIII-2
C. Operation	VIII-4
IX. COMPUTER SYSTEM REQUIREMENTS	IX-1
A. Introduction	IX-1
B. Hardware Requirements	IX-2
C. Software Requirements	IX-4
D. Selection Guide	IX-6
X. GOVERNMENTAL REGULATIONS	X-1
APPENDIX A - GLOSSARY	A-1
APPENDIX B - BIBLIOGRAPHY	B-1
APPENDIX C - INPUT SOURCE DOCUMENTS	C-1
APPENDIX D - FILE SPECIFICATIONS	D-1
APPENDIX E - OUTPUT DOCUMENT SPECIFICATIONS	E-1

LIST OF FIGURES

FIGURE NO.	TITLE	PAGE
II-1	Activity Flowchart Legend	II-9
II-2	Financial Management System Overview Flowchart	II-11
III-1	Accounting Operations Flowchart	III-3
III-2	General Accounting, P-1	III-21,III-22
III-3	Facilities Inventory, P-2	III-23
III-4	Customer Billing, P-3	III-24,III-25
III-5	Payroll-Personnel, P-4	III-26,III-27, III-28
III-6	Purchasing, P-5	III-29,III-30
IV-1	Replacement Reserve Operations Flowchart	IV-5
IV-2	Equipment Life and Depreciation, P-6	IV-13
IV-3	Annual Replacement Reserve, P-7	IV-14
V-1	Cost Recovery Operations Flowchart	V-3
V-2	Revenue Requirements, P-8	V-13
V-3	Service Area Analysis, P-9	V-14,V-15
V-4	Service Charge Rate Setting, P-10	V-16,V-17
VI-1	Budgeting Operations Flowchart	VI-3
VI-2	Revenue Analysis, P-11	VI-12
VI-3	Operations Performance, P-12	VI-13,VI-14
VI-4	Expenditure Analysis, P-13	VI-15
VI-5	Budget Implementation, P-14	VI-16,VI-17
VI-6	Cash Flow Forecasts, P-15	VI-18
VII-1	Planning Operations Flowchart	VII-2
VII-2	Population Statistics	VII-13
VII-3	Financial Ability Analysis, P-17	VII-14,VII-15
VII-4	Performance Analysis, P-18	VII-16,VII-17
VII-5	Budget Planning, P-19	VII-18

PART ONE

THE POTW FINANCIAL MANAGEMENT SYSTEM

I. EXECUTIVE SUMMARY

Sound financial management is a key to successfully operating any business. EPA has reviewed the management policies and procedures of small publicly-owned treatment works (POTW's) and has found many shortcomings that have directly or indirectly contributed to the failure of some plants to meet their discharge requirements and to plan for future replacement costs. These shortcomings in the management policies and procedures of POTW's were so widespread and diverse that EPA decided to develop this guidance manual to assist POTW managers in implementing a sound financial management system. The goal of this manual is to guide POTW managers toward implementing a more complete, consistent financial management system as defined by the EPA Construction Grants Regulations and to facilitate computerization of that system to reduce the personnel time required to run it. Of particular concern to a financial management system is the establishment and the implementation of accepted accounting standards and procedures. An accounting system that provides management with the capability to determine their exact financial position at any given time and under any proposed conditions by accounting for revenues generated and operating expenditures is at the center of a successful financial management system. Chapter III describes in detail the components of an accounting system, while Chapter X summarizes some of the governmental regulations and recommended standards affecting these various components. A well-conceived accounting system would also enable the POTW owners to readily determine accurate costs of services and proportionately allocate these costs to customers based on usage.

A financial management system established along the guidelines proposed in this manual would not only assist managers in monitoring the flow of dollars, but would also serve as an information system. This system would provide pertinent information in an organized form to enable management to more effectively perform their duties; including tracking equipment performance, scheduling preventive maintenance tasks, monitoring the utilization and purchasing of equipment and supplies, determining and providing for sufficient replacement funds, and distributing the work load. Computerization of the financial management system would minimize the time required to record and

process the required data, and in some cases, allow the collection and use of valuable information previously not maintained due to staffing and file storage limitations. An example of this is the establishment of a comprehensive inventory system containing data on the plant's major equipment and machinery and on spare parts; including information for ordering, purchasing, operating, and maintaining items. These data could then be used to not only monitor the purchase and replacement of assets, but also to initiate a preventive maintenance system to schedule and monitor work assignments to fulfill maintenance requirements. In general, with the timely generation of appropriately formatted financial and plant operations information to assist them, utility managers and owners will be able to more efficiently make effective decisions and establish standards that would improve the performance level of the treatment plant operations.

With the increased power and availability of mini- and micro- computers at reasonable prices, the financial management systems of even small POTW's can easily be computerized. Therefore, this manual was designed with computerization in mind. Use of this document as a guide for implementing a manually-operated financial management system, however, is not precluded although information is presented, such as file layouts and system cost estimates, that pertain strictly to computer application.

Chapter II of this manual (Introduction) is designed to provide the POTW manager with a brief summary of the system. Chapters III through VII contain detailed descriptions of the components of the financial management system, which include accounting, replacement reserve, revenue generation, budgeting, and planning. Each of these components is described in sufficient detail so that an experienced financial manager and qualified computer programmer could select the appropriate equipment and commercial software, and develop custom software to fully implement the system. Chapters VIII through X provide additional information on how to implement the financial management system, what type of computer hardware and software are required, and governmental regulations pertaining to financial management.

Certain portions of the financial management system are already available in computer program form, particularly within the accounting area. These

programs and the appropriate computer hardware can be purchased and installed relatively easily within a few months' timeframe. Other portions of the system are not currently available and would have to be custom-designed to meet the needs of the POTW, therefore requiring several more months to implement.

If the reader of this manual is only considering implementation of a financial management system, then only Chapters II, VIII, IX and X should be studied. If a decision has been made to implement the system to improve or computerize an existing system, then Chapters III through VII along with Appendices C, D, and E should also be studied. The reader should realize that there are certain state laws and regulations concerning the methods and formats for financial management systems and data archiving that may impact specific accounting practices recommended in this manual. It is the reader's responsibility to investigate and incorporate state requirements.

The entire financial management system described in this manual is most applicable to larger and more complex POTWs; generally this means a mechanical POTW of 1 million gallons per day (MGD) capacity or greater. The level of sophistication and amount of detail in each of the five basic financial management system elements (i.e. accounting, replacement reserve, revenue generation, budgeting and planning) should increase as the POTW complexity and size increases. Also, the applicability and cost-effectiveness of computerizing a financial management system would probably increase as POTW complexity and size increase. Regardless of the POTW's size or complexity, the financial management system should include, as a minimum, the accounting, revenue generation and budgeting elements.

This manual does not stipulate a relationship between the need for a specific type of financial management system and the POTW design flow. Generally, a financial management system's level of sophistication and applicability for computerization is unique to each POTW and usually increases as POTW complexity and size increase.

II. INTRODUCTION

A. Purpose of the Manual

This manual presents a design for a financial management system for "typical" Publicly-Owned Treatment Works (POTW's) which generally consist of wastewater collection and treatment systems for a design capacity of 10 MGD or less. With diminishing Federal resources available for funding their POTW's, local communities, as well as States, must assume a greater funding and management role in providing for their wastewater needs. These needs include operating and maintaining wastewater collection and treatment facilities which also allow for replacement of items needed to provide the present level of service on a continuing basis. The new management role of the States and the local communities is to ensure that the increasing local share of POTW funding is spent cost- effectively.

The financial management system described in this manual is proposed to help wastewater utility managers implement a system such that it satisfies the User Charge System requirement as set forth in 40 CFR 35.2140(d) (refer to Chapter X for the text of this regulation). The system consists of elements that are to be tools to assist the utility managers and accounting staff in performing their day-to-day accounting tasks and short-term budgeting and planning activities. The various system elements provide readily accessible financial and plant operation information that is up-to-date and accurate and in a form most valuable to the end-user: the utility manager/operator, the owner, the governing agency(s), and the public. The timeliness of these elements aids utility managers in making decisions and setting policies that will ensure compliance with NPDES performance standards while achieving financial self-sufficiency in the operation and maintenance of the treatment works. It is not the intention of this manual nor the EPA facilities planning process to have a POTW determine the revenue potential of its service area in order to establish its expenditure level and subsequently its sewer charge rate and level of treatment. Since the implementation and enforcement of the NPDES permit system, meeting environmental demands resulting from the consideration of water quality standards are to be the POTW's goals. Therefore, costs to

operate a facility at a specific treatment level determines the sewer service charges needed to meet the corresponding revenue requirements, not the other way around.

It is recognized that not all POTW's (most particularly those less than 3 mgd) would have the expertise or need to implement all elements of the proposed financial management system. Therefore the various elements are so designed that a POTW could implement only selected elements. Also, certain programs within a given element, such as customer billing of the accounting element or service charge rate setting of the revenue generation element, could be developed with certain complex routines, as described in this manual, eliminated when determined as not needed. In any case, without a detailed on-line financial management system of some sort for daily cost accounting, one would never know the POTW's financial status, or if the goal of financial self-sufficiency was approached or even reached. The system is also capable of caulculating operation performance indices from the data collected which could assist the utility in determining the efficiency of their current operations and in flagging operation problem areas.

The financial elements specifically addressed in this management system include:

- Accounting and financial reporting;
- Replacement reserve;
- Revenue generation;
- Budgeting; and
- Planning and service area financial ability.

Because a comprehensive system for most POTW's would involve gathering, recording, and processing large amounts of data and information for rapid day-to-day analyses, this system design was developed with the intent to be computer-based for automatic data processing. Even if a POTW manager did not wish to incorporate computer capabilities into his financial management functions, many of the activities described for the system presented here could still be performed on a manual basis for effective overall management of the

POTW facilities. It should be noted that the scope of this manual in reference to financial planning is short-range in that it only addresses planning activities within several fiscal periods to enable the facility to operate at the current treatment level on a continuing basis. This includes planning for, developing, and implementing operating budgets, and excludes long-term capital budgeting processes and financing techniques needed for major changes in facility design, operation, and expenditure levels. It should be noted that the operating budget as defined here does include budgeting for capital expenditures such as annual debt service requirements and reserves for extensions and improvements needed to ensure continuing service.

The intended audience of this manual includes utility managers and owners (grantees) and the accounting and engineering consulting communities. As stated previously, the financial management system is to provide utility managers with tools to assist them in complying with NPDES performance standards while achieving financial self-sufficiency. The accounting community and the engineering consulting communities can utilize this manual as an information source and guidebook for constructing and implementing computer-based financial management systems for POTW's.

A "typical" POTW setup was defined for this manual in order to develop a generic financial management system that can be useful to the majority of POTW's. The primary components affecting the design of such a system and their classifications used to describe a typical setup for this manual are presented below:

- Ownership - Only POTW's with operational autonomy are included since the goal of the system is for a POTW to operate on a self-sustaining basis. It is assumed that the utility has complete control of its financing and accounting systems, and the power to establish its own budget and recover costs incurred. In general, this definition includes four types of ownerships:

  Single municipality to include all entities under the state level such as counties, townships, towns, etc. It must be noted that the utility must be able to fully account for all of its expenses and revenue in order to use the module effectively. This could be a difficult effort for this classification since many of the

utility's support services may be provided by separate municipal departments such as purchasing, finance, planning, engineering, etc.

Independent authority to include the fully autonomous entities that own and operate their utilities with local government control defined by state legislature.

Joint ownership to include utilities where two or more communities or other entities have constructed and jointly operate the wastewater facilities. This classification includes regional agencies.

Special purpose district (sanitary district) is similar to joint ownership but allows for more control over planning functions.

- System Components - System components for a "typical" POTW include two classifications: secondary treatment and advanced treatment. Even though primary treatment is not included as "typical", it was assumed that any POTW having only primary treatment facilities could use any financial management system developed for more sophisticated POTW's. It was determined also that having a wastewater collection system or not will not significantly affect the financial management system design.

- System Size - The size (volume of wastewater treated) is important to the design of the financial management system since it affects the number of individual financial transactions/accounts and, therefore, the file sizes. This is of concern because the system is designed with automation in mind using microcomputers (which have limited storage capacity and data management capabilities). It should be noted that the resulting financial statements and reports showing management the effect of all transactions will be of similar form regardless of size. Large systems (over 10 mgd) are not considered typical in this manual and therefore not addressed since these POTW systems would need, if they are not already using, the assistance of minicomputers or large mainframes (in-house or service supplied) for their automated financial management needs. The small plants (less than 3 mgd) may find that the financial management systems in total is too complex and demands too many resources to operate. There are a number of elements in the financial management system that could be left out by small plants to result in a more manageable package, including: facilities inventory, service area analysis, revenue analysis, budget implementation,

population statistics, and budget planning. As these small plants grow, they could selectively implement these elements to upgrade their financial management system.

Obviously, the components used to define the "typical" POTW setup will not cover all the needs of every POTW. To make the financial management system as applicable as possible, a list of "options" has been derived to address the most common variations other than those accounted for in the establishment of the "typical" setup. These options must be considered when a financial management system is being customized and implemented for a specific POTW. They include:

- Means of revenue generation (often directly related to the type of ownership);
- Secondary treatment processes (aeration, biological, filtration, physical/chemical, and disinfection);
- Advanced treatment processes (phosphorus removal, nitrogen removal, filtration, and screening);
- Collection system (sanitary, combined);
- Sludge treatment/disposal;
- General administration size and qualifications (clerical, engineer, operator, administrator, lab technician);
- Amount of information needed by management (to determine which elements are to be implemented and the level of interdependence of system programs and files); and
- Level of management reviewing information (effects the format of system output because different levels of management have different needs).

B. Organization of the Manual

The manual consists of four parts:

- Part One - The POTW Financial Management System includes Chapter I, the executive summary and Chapter II, the introduction. The introduction has a system overview section that provides general descriptions of the six major elements which make up the financial management system and summarizes the requirements for a computer-based system.

- Part Two - Financial Accounting includes Chapter III, the detailed description of the accounting element of the system. This element encompasses general accounting and financial reporting, facilities inventory, customer billing, payroll-personnel, and purchasing functions. Also included is Chapter IV, the detailed description of the replacement reserve element which is to be used to estimate a "reasonable" annual replacement reserve.

- Part Three - Financial Planning includes Chapter V, revenue generation; Chapter VI, budgeting; and Chapter VII, planning. These chapters provide, respectively, the detailed descriptions of sewer service charge determination, operations budgeting, and planning (including service area financial ability analysis and utility operations performance evaluation).

- Part Four - System Implementation includes Chapter VIII which addresses management and operations requirements; Chapter IX to provide guidelines for computer system requirements; and Chapter X to summarize governmental regulations concerning a POTW financial management system.

Also included in the manual are five appendices:

- Appendix A - a glossary which includes accounting, computer and engineering terms.

- Appendix B - a bibliography which lists reference sources including guidebooks, handbooks, and manuals of practice for accounting systems, sewer service charge systems, inventory systems, and operation and preventive maintenance systems that describe evaluation techniques, standards, and regulations.

- Appendix C - includes descriptions of required "base" data and examples of input source document formats.

- Appendix D - includes a general definition of "file" as used in this manual and what characteristics are specified and why. The twenty-one (21) files are then individually presented and described. These descriptions include: identification of accessing programs and why they access (input, retrieval, or both of particular data); identification of access keys; and data descriptions for each item stored in each record group.

- Appendix E - includes descriptions in the form of figures for each output document to be generated (printed) by the programs of the proposed financial management system.

Three types of flowcharts have been developed for this manual: overview flowcharts, operations flowcharts, and activity flowcharts. The overview flow chart, the macro-level flowchart, is presented in section C of this chapter, the system overview. It illustrates the interaction between each of the system's major elements: accounting, replacement reserve, cost recovery, budgeting, and planning. This flowchart presents the system as a group of five integrated elements, each of which consists of various interacting activities (computer-based programs). The second level of flowchart is the operations flowchart. There are five operations flowcharts, one for each of the five elements. Presented in Chapters III through VII for each of their respective elements, these flowcharts encompass all the activities of a particular element and illustrate their interrelationship with each other and the data base files. Also included with these flowcharts are listings of input (source) documents and output documents.

The third and final level of flowcharts provided in this manual is the activity flowchart. This flowchart illustrates the conceptual design for each of the nineteen (19) activity programs which are the basis of the financial management system. These programs each depict a "stand-alone" activity that could be implemented and computerized without requiring the implementation and computerization of other activities. In actual operations these processes could be coded and executed as one computer program or a series of interconnected programs. The processes illustrated in a given activity

flowchart include retrieving data from and storing data in files; entering data directly as a user; defining operations causing change in value, form, or location of information; decision operations to determine which of a number of alternative paths to follow; and printing of output documents. The intent of the flowcharts is to provide the utility manager with guidelines for the development of a computer-based financial management system; however, the routines in each program could be manually performed. It should be noted that some of these programs, particularly those of the accounting element, currently exist in many commercially available packages. The flowchart legend presented in Figure II-1 describes the purpose of each of the six (6) symbols used in the activity flowcharts. The lines connecting the symbols are drawn with arrows to show the logical order of the operations sequence and data flow direction. These flowcharts do not supply the computer programmer with data management techniques, only the basic program logic. It is assumed that a programmer attempting to develop any of these programs would have a basic knowledge of data management and file maintenance programming techniques. If a utility wishes to develop customized programs, some of the routines and logic flow of programs may have to be altered to meet their needs.

The financial management system elements, in particular the accounting element, are designed so that the user has the option to implement individual programs or an integrated system of any related programs. An integrated, computer-based system connects each related program and, as much as possible, eliminates entering information by hand. It should be noted that since each program is intended to be functional as a stand-alone system, there may be duplication of certain functions when programs are integrated. This duplication is necessary, aside from duplication of data storage (refer to Appendix D-Files), and enhances the system in overall integrity.

START — BEGINNING OF PROGRAM.

STOP — ENDING OF PROGRAM.

? — DECISION OPERATION THAT DETERMINES WHICH OF TWO ALTERNATIVE PATHS IS FOLLOWED.

GENERAL USER INTERACTION FUNCTION FOR ENTERING DATA FROM SOURCE DOCUMENTS OR EXISTING FILES FOR PROCESSING AND/OR UPDATING STORED DATA IN FILES. IN SOME CASES WHERE REFERENCE IS MADE TO "OPEN XXX FILE", IT REQUIRES ACCESSING (OPENING) FILE XXX TO RETRIEVE FROM STORAGE AND MAKE AVAILABLE THE DATA STORED IN THE FILE.

ANY PROCESSING FUNCTION: DEFINED OPERATION(S) CAUSING CHANGE IN VALUE(S), FORM(S), OR LOCATION(S) OF DATA OR INFORMATION

PRINT... — OUTPUT FUNCTION FOR "HARDCOPY" DOCUMENTS REQUIRING PRINTING

FIGURE II-1

ACTIVITY FLOWCHART LEGEND

C. System Overview

1. Introduction

The financial management system consists of conceptual designs for five (5) major elements, as illustrated in Figure II-2:

- Accounting;
- Replacement reserve;
- Revenue generation;
- Budgeting; and
- Planning.

Each element is divided into unique, stand-alone programs and files. Table II-1 lists the elements and their respective programs along with data base files required to support the programs. In all, nineteen (19) programs and twenty-one (21) files have been designed. Generally, the programs utilize more than one file so files are shared. Each file is actually made up of groups of related records (refer to Appendix E) where, in some cases, a program may only access one particular record. If only certain programs are desired, then only those records of the files required by those programs need to be developed.

The following five sections (B through F) summarize the functions of each program in the system. Section G summarizes the implementation steps for a computer-based financial management system.

2. Accounting

The backbone to the system is the accounting element, which provides the bookkeeping and basic financial reporting functions. The accounting element feeds into all other elements, providing them with information concerning the utility's financial position and effects of financial operations on the funds and account groups. Five (5) separate activities (programs) make-up the accounting element:

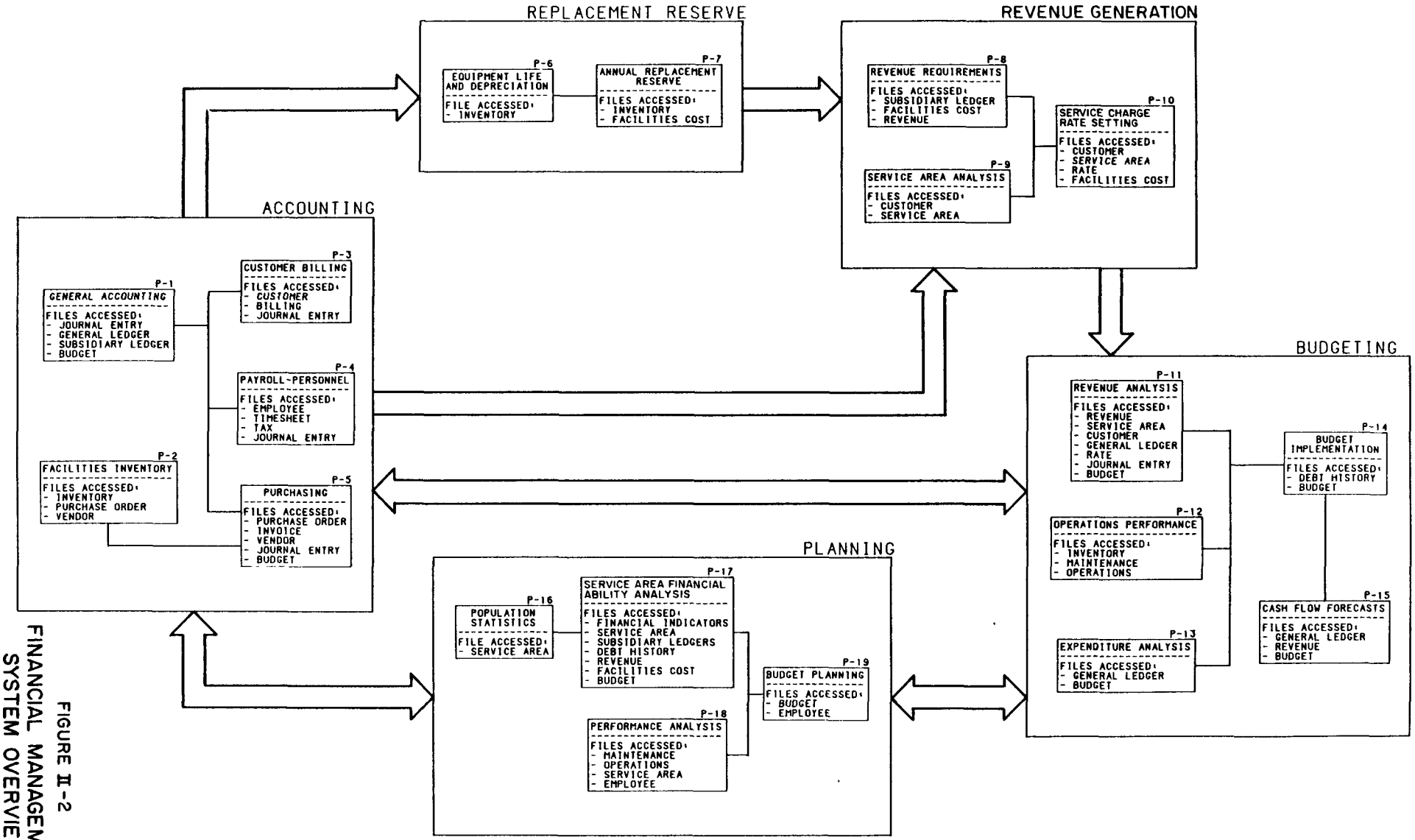

FIGURE II-2
FINANCIAL MANAGEMENT
SYSTEM OVERVIEW
FLOWCHART

TABLE II-1

SYSTEM PROGRAMS AND FILES

ELEMENT	PROGRAM	FILES
Accounting		
	General Accounting (P-1)	
		Journal Entry (F-11) General Ledger (F-8) Subsidiary Ledger (F-18) Budget (F-2)
	Facilities Inventory (P-2)	
		Inventory (F-9) Purchase Order (F-14) Vendor (F-21)
	Customer Billing (P-3)	
		Customer (F-3) Billing (F-1) Journal Entry (F-11)
	Payroll-Personnel (P-4)	
		Employee (F-5) Timesheet (F-20) Tax (F-19) Journal Entry (F-11)
	Purchasing (P-5)	
		Purchase Order (F-14) Invoice (F-10) Vendor (F-21) Journal Entry (F-11) Budget (F-2)
Replacement Reserve		
	Equipment Life and Depreciation (P-6)	
		Inventory (F-9)
	Annual Replacement Reserve (P-7)	
		Inventory (F-9) Facilities Cost (F-6)

TABLE II-1

SYSTEM PROGRAMS AND FILES
(Continued)

ELEMENT	PROGRAM	FILES
Revenue Generation		
	Revenue Requirement (P-8)	
		Subsidiary Ledger (F-18) Facilities Cost (F-6) Revenue (F-16)
	Service Area Analysis (P-9)	
		Customer (F-3) Service Area (F-17)
	Sewer Service Charge Rate Setting (P-10)	
		Customer (F-3) Service Area (F-17) Rate (F-15) Facilities Cost (F-6)
Budgeting		
	Revenue Analysis (P-11)	
		Revenue (F-16) Service Area (F-17) Customer (F-3) General Ledger (F-8) Rate (F-15) Journal Entry (F-11) Budget (F-2)
	Operations Performance (P-12)	
		Inventory (F-9) Maintenance (F-12) Operations (F-13)
	Expenditure Analysis (P-13)	
		General Ledger (F-8) Budget (F-2)
	Budget Implementation (P-14)	
		Debt History (F-4) Budget (F-2)

TABLE II-1

SYSTEM PROGRAMS AND FILES
(Continued)

ELEMENT	PROGRAM	FILES
	Cash Flow Forecasts (P-15)	
		General Ledger (F-8) Revenue (F-16) Budget (F-2)
Planning		
	Population Statistics (P-16)	
		Service Area (F-17)
	Service Area Financial Ability Analysis (P-17)	
		Financial Indications (F-7) Service Area (F-17) Subsidiary Ledger (F-18) Debt History (F-4) Revenue (F-16) Facilities Cost (F-6) Budget (F-2)
	Performance Analysis (P-18)	
		Maintenance (F-12) Operations (F-13) Service Area (F-17) Employee (F-5)
	Budget Planning (P-19)	
		Budget (F-2) Employee (F-5)

- General Accounting (P-1) - to assist in monitoring financial transactions by performing functions including journal entry, ledger posting, and financial reporting.

- Facilities Inventory (P-2) - to assist in maintaining an up-to-date record of supplies and equipment in use, on hand, on order, and required by developing a file for all utility assets and techniques for maintaining and evaluating a perpetual stockroom inventory, cross-checking the file with periodic physical inventories, and generating reports on inventory value and status.

- Customer Billing (P-3) - to assist in generating customer bills for more timely receipt of revenues by developing a file for all service customers, which includes information on the customer's user class; calculating customer service charges; maintaining customer useage, payment, and delinquency status; and generating bills, reports, and journal entries (for accounts receivable to P-1).

- Payroll-Personnel (P-4) - to assist in paying workers and evaluating their performance by developing an employee file with both payroll and personnel data; calculating employee payroll and tax deductions; generating paychecks and stubs, payroll reports, and journal entries (for accounts payable to P-1); and generating personnel reports for evaluating employee potential and actual workload.

- Purchasing (P-5) - to assist in ordering and paying for supplies and equipment by developing files for purchase orders, vendors, and invoices and techniques for updating these files; providing "timely" payments; and generating voucher checks, reports, and journal entries (for accounts payable to P-1).

As stated above, programs P-3, P-4, and P-5 generate journal entries for the accounting program, P-1. Security control can be provided here by allowing the journal entries to be generated by various designated employees and the actual posting of these entries, which is a part of P-1, to be performed by a different employee who has sole responsibility over the bookkeeping functions. It is also possible to have the employee requesting and receiving purchased assets (control over the inventory, P-2) be a different individual from the employee doing the actual purchasing (control over the purchasing, P-5).

3. Replacement Reserve

The second element involves estimating an annual replacement reserve based on the depreciation of the utility's equipment and machinery assets. This includes two programs:

- Equipment Life and Depreciation (P-6) - includes the development of an inventory file and the calculation of the depreciation rates or charges of an asset based on its original cost, date of purchase, salvage value, and service life which are modified based on flucuations in the value of a dollar, usage and maintenance of the asset, and, in some cases, the experience of the engineer concerning technical advancements and service area development.

- Annual Replacement Reserve (P-7) - includes generating annual reports for replacement reserve based on the depreciation rates and charges of the assets which involves the development of an inventory file (for input storage) and a facilities cost file (for output storage).

This element requires input from the inventory records established by the accounting element. The reserve values generated by the element is to be used in determining the total cost of services for cost recovery analysis.

4. Revenue Generation

The revenue generation element is designed to set sewer service charge rates based on the actual or proposed cost of services and on the existing or projected level and type of development in the service area. Three programs make up this element:

- Revenue Requirements (P-8) - includes accessing subsidiary ledger expenditure data; isolating OM&R costs from capital costs including debt service and reserves for extensions/improvements; the development of a facilities cost file to maintain cost of service data and a revenue file to maintain revenue data; and the generation of a report to document cost of services in general and by user class, non-use revenue amounts, and resulting revenue requirements to determine sewer service charges.

- Service Area Analysis (P-9) - includes the development of a customer file for storing data on customer flows and a service area file for storing data on general service area flows (at pump stations, system meters bypasses/overflows, and industrial meters); disaggregation of flow to subarea in the service areas; and generation of wastewater flow summary reports.

- Sewer Service Charge Rate Setting (P-10) - includes the allocation of revenue requirement cost values, determined by P-8, to cost functions followed by distribution to customer classes and the generation of sewer service rate schedules documenting both the user charge and the "asset" charge.

5. Budgeting

This element concerns the procedures for the implementation of a selected operating budget plan, the periodic "control" functions that assure the conformity of actual operations (financial and treatment processes) with the budget plan, and the functions required to project cash flow during the budget period. Five (5) programs provide these capabilities:

- Revenue Analysis (P-11) - determines the proposed cost recovery amount by incorporating a projected loss amount (such as that incurred from defaults on customer billings) and trend data from historical revenue collection data.

- Operations Performance (P-12) - generates report concerning equipment performance (maintenance, repair, and usage), plant performance (compliance with NPDES standards), and general statistics to evaluate any parameter (such as pollutant influent/effluent levels, energy usage, and chemical usage).

- Expenditure Analysis (P-13) - includes the budget comparison functions that generate periodic (yearly, quarterly, or monthly) reports comparing the budgeted amount, by line-item or by department/activity, to the actual expenditures to determine the variance from the current and previous years or months.

- Budget Implementation (P-14) - includes the maintenance of a budget file to store budget "policy" data (budget period length, review process, minimums, etc.), the maintenance of a debt history file to store proposed debt service data, the development of

operating budget reports and schedules, and the generation of a budget approval summary.

- Cash flow forecasts (P-15) - includes the development of cash flow forecasts for the utility as a whole or by departments based on the ratios of receipts to revenues and expenses to expenditures using historical data.

6. Planning

The planning elements consist of developing and selecting budget plans for the annual operating budget. This process involves analyzing the financial capability of the service area and the performance of the utility system. Four (4) programs are designed for this element:

- Population Statistics (P-16) - includes the maintenance of service area population and income data to evaluate trends and changes which also includes land use development patterns.

- Service Area Financial Ability Analysis (P-17) - involves the calculation of eleven (11) key financial indicators to assess the service area's and sub-areas' (individual communities) financial conditions and the POTW's capability to finance various alternative budget plans.

- Performance Analyses (P-18) - involves the evaluation of present and proposed utility operations (alternative budget plans) based on four performance categories: efficiency ($/unit of work), effectiveness (treatment removal rate), workload (staffing capabilities), and wastewater loading (flow and pollutant loading capacities of facilities).

- Budget Planning (P-19) - involves the generation of budget plan work schedules for the selected plan.

As stated previously in this chapter, the environmental demands, resulting from consideration of water quality standards and the related effluent limitations, are the driving force of a POTW's design, operations, and expenditure levels not the service area's ability (or willingness) to meet revenue requirements. Even so, the service area financial ability analysis program is presented as a means of assisting POTW managers in establishing

timetables for minor construction projects and in evaluating the effects of various financing alternatives. By providing an overview of the service area's financial status and the budget requirements that are to ensure continuous operations at specified performance levels, the managers and owners can establish plans of action that take advantage of a favorable cash flow and result in judicious investments and/or loans that keep costs of service and debt service requirements at an optimal level.

7. Implementation of a Computer-Based System

The financial management system described in this manual can be used as a guide by a utility manager in planning for a system suited to his POTW's managerial needs. To implement a computer-based system several steps must be followed:

- Evaluation of available software packages and any required modifications;
- Identification of programs requiring custom design software and of manual activities;
- Evaluation of vendors including their capabilities and costs for providing hardware, software, training and continued maintenance/follow-up service;
- Evaluation of effort and time required for converting existing records to computer-based files; and
- Evaluation of existing staff capabilities and limitations.

Table II-2 is a list of specific capabilities that are to be provided for in a computer-based financial management system in order to conform with generally accepted accounting principles (GAAP). The conceptual design for the accounting element allows for these requirements. The following chapter describes in detail the accounting basis to be used and the Sample Chart of Accounts presented in Appendix C lists the appropriate funds and account groups for a POTW.

All programs in all elements should be equipped with security checks and controls that limit access (read and write) to data base files and execution of

TABLE II-2

CHECKLIST FOR CONFORMITY WITH GAAP

- The ability to produce required accounting and financial records and reports on a cash, accrual, or modified accrual basis.

- The use of multiple accounting bases for financial reporting, and the ability to track events from their earliest point of formal recognition to the end point in the process.

- The use of appropriate funds and account groups to meet GAAP accounting and reporting requirements. Each element of accounting information must be fund specific and treated according to that fund's special accounting measurement characteristics.

- The maintenance of audit trails, including identification of the document that generates each accounting entry.

- The use of double-entry bookkeeping to ensure accounting consistency and to produce auditable financial records.

Source: Ernst & Whinney, "How Your Government Can Apply GAAP," 1982.

programs to authorized personnel only. Also, all programs should be developed using the menu-drive concept which provides the user with a list (menu) of functions that can be activated and prompts the user for specific input. A detailed discussion of these items and descriptions of staff requirements for system implementation and operation are provided in Chapter VIII, General System Requirements.

PART TWO

FINANCIAL ACCOUNTING

III. ACCOUNTING

A. Overview

Accounting, the "language" used to communicate financial information, is the basis of a sound financial management system. The accounting element is designed to accommodate the automatic recording of transactions and the periodic preparation of financial statements. These functions are to assist utility management in controlling current operations costs and planning for projected service levels, thereby requiring the adoption of a proper chart of accounts to classify financial transactions within a standard coding structure; the formulation of procedures for the accumulation and reporting of financial information and data; and the development of appropriate internal accounting "checks and balances".

The integrated accounting system presented here provides the following capabilities:

- General Accounting - Subsidiary ledgers and the general ledger are instantaneously and automatically updated with journal entry, customer billing, inventory, purchasing, and payroll data and financial reports are printed on demand.

- Facilities Inventory - All facility assets are recorded in a permanent record file, with stock items monitored in a perpetual inventory which automatically flags items for reorder and adjusts quantity on-hand and inventory value when the file is updated (purchase or utilization of items).

- Customer Billing - Includes processing of all billing items: cash receipts and adjustments, meter data, billing statements, delinquency/penalty historics, and reports. Customer billings will be instantaneously and automatically entered into the proper accounts in the accounts receivable register (journal).

- Payroll and Personnel - Includes processing of timesheets, payroll/paychecks, and W-2 forms, and generation of reports. Payroll will be instantaneously and automatically entered into the proper accounts in the accounts payable register. Employee history data will be obtainable as

recent as the last pay period for personnel management evaluation reports.

- Purchasing - The purchasing (ordering, receiving, and payment) process will be automated by the instantaneous interactions between the Purchasing and General Accounting programs (replacement reserve updates; inventory value and quantity-on-hand updates; and matching of reorder notice, purchase order, invoice and receiving slip).

A total of thirteen (13) file types are needed for the integrated accounting system:

- Billing File;
- Budget File;
- Customer File;
- Employee File;
- General Ledger File;
- Inventory File;
- Invoice File;
- Journal Entry File;
- Purchase Order File;
- Subsidiary Ledger File;
- Tax File;
- Timesheet File; and
- Vendor File.

Figure III-1 is the operations flowchart for the accounting element. It should be noted that the General Accounting program, P-1, is presented as four separate blocks (journal entry, ledger posting, financial reporting, and closing entries) to better illustrate the interaction with the files and the other programs (P-2, P-3, P-4, and P-5) of the accounting element.

Currently, accounting is the only area of finance for which national standards are available. These standards, referred to as Generally Accepted

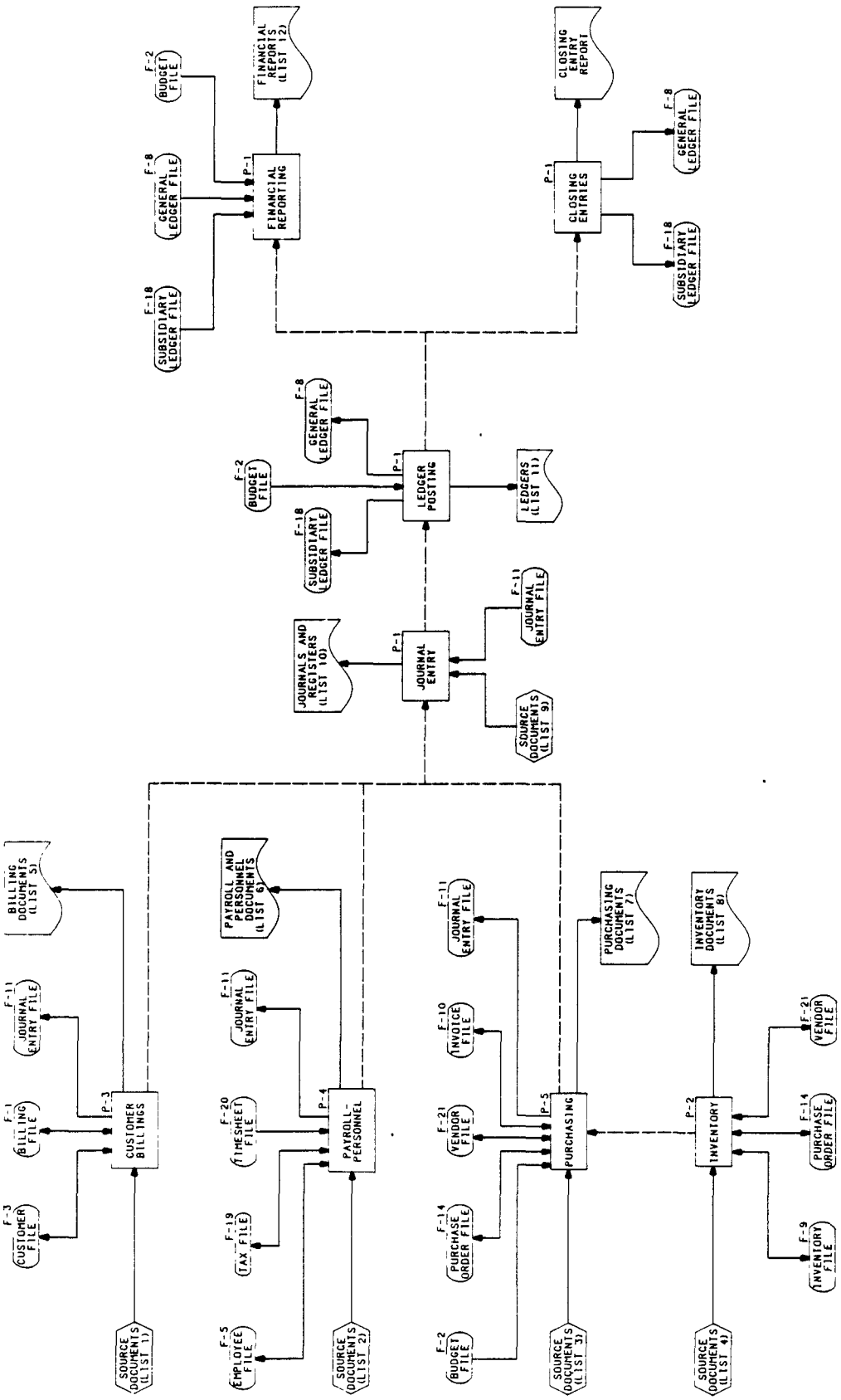

FIGURE III-1

ACCOUNTING OPERATIONS FLOWCHART

FIGURE III-1

ACCOUNTING OPERATIONS FLOWCHART (Cont'd.)

List 1 - Source Documents, Customer Billings, P-3

- Meter Reading Book
- Payment Notice (Stub from Customer Billing Statement)
- Customer Connection Application, Water/Sewer (Request for Service)

List 2 - Source Documents, Payroll - Personnel, P-4

- Employee Application
- Employee Timesheet or Time Clock Card
- Employee Performance Review and Evaluation Form

List 3 - Source Documents, Purchasing, P-5

- Requisition Form
- Bid (Quotation)
- Receiving Report
- Invoice

List 4 - Source Documents, Inventory, P-2

- Facility Inventory Functional Number System (one time entry)
- Receiving Report
- Physical Inventory Report
- Stock Issue Ticket (for obtaining and returning)
- Maintenance Procedure Data (Manufacturer information)

List 5 - Billing Documents, P-3

- Billing Summary Register
- Billing Statements (per account)
- Delinquency Notice

FIGURE III-1

ACCOUNTING OPERATIONS FLOWCHART (Cont'd.)

List 5 - Billing Documents, P-3 (Cont'd.)

- Delinquency - Penalty Register
- Shut-off Notice
- Customer Accounts Status Report
- Individual Customer Meter Reading Log
- Mailing Labels
- Customer Listing

List 6 - Payroll and Personnel Documents, P-4

- Employee File Listing
- Tax Rate File Listing
- Employee Timesheet Summary Report
- Payroll Register
- Payroll Deduction Register
- Paycheck and Stub
- Labor Distribution Report
- Wage Tax Report
- Union Dues Report
- Credit Union Report
- Unemployment Compensation Report
- Social Security Report
- United Way Report
- W-2 Forms
- Salary and Classification Report
- Performance Evaluation Report
- Certification, Registration, and Education Report

List 7 - Purchasing Documents, P-5

- Purchase Order
- Request for Quotation

FIGURE III-1

ACCOUNTING OPERATIONS FLOWCHART (Cont'd.)

List 7 - Purchasing Documents, P-5 (Cont'd.)

- Report of Discrepancy
- Voucher Check
- Voucher Check Listing (Schedule of Bills)
- Purchase Order (Retired/Outstanding) Listing
- Invoice (Paid/Unpaid) Listing

List 8 - Inventory Documents, P-2

- Reorder Notice
- Inventory File Listing
- Inventory Summary Report (Stock Status Report)
- Quantity On-Hand Report (Multiple Warehouse Report)
- Reorder Analysis Report (Lead Time Report)
- Physical Inventory Analysis
- Back Order Report
- Utilization Rate Report
- Vendor Summary
- Stock Return Summary
- Inventory Cost (Value) Report
- Discontinued Parts Listing
- Inventory Stock Record

List 9 - Source Documents, Journal Entry, P-1

- Deposit Slip
- Receipt for Cash Received
- Notes Payable
- Customer Billing
- Customer Billing Payment Notice

FIGURE III-1

ACCOUNTING OPERATIONS FLOWCHART (Cont'd.)

List 9 - Source Documents, Journal Entry, P-1 (Cont'd.)

- Payroll
- Purchase Order
- Invoice
- Chart of Accounts (one time entry)

List 10 - Journals and Registers, P-1

- Listing of Journal Entries
- Check Register
- Cash Receipts Journal
- Cash Disbursement (Payment) Journal
- General Journal

List 11 - Ledgers, P-1

- General Ledger
- Subsidiary Ledger (Accounts Receivable, Accounts Payable, Fixed Asset)

List 12 - Financial Reports, P-1

- Balance Sheet
- Income Statement
- Trial Balance Report
- Encumbrances/Available Balance Report
- Revenues (Year to Date, Month to Date) Report
- Cash Requirements Report
- Cash Reconciliation Report
- Analysis of Equity Report

FIGURE III-1

ACCOUNTING OPERATIONS FLOWCHART (Cont'd.)

List 12 - Financial Reports, P-1

- Budget Transfer Listing
- Investment Report
- Long-Term Bond/Notes Report
- Sinking Fund Report
- Fixed Asset Report
- Closing Entry Report

Accounting Principles (GAAP), establish the type of accounting that government entities should use, its basis and focus, and the reports that are regularly produced. The accounting practices for this financial management system consist of fund accounting using the accrual (or modified accrual) basis. Since this study concerns only "publicly-owned" treatment works (POTW's) the accounting element is organized for operations using fund accounting. Fund accounting emphasizes separate detailed accounting and reporting for each of the subparts (funds) of the utility-owner, the government. This assists in assuring that legal restrictions governing the use of revenue sources are met.

The basis of accounting used for a system determines when revenues and expenditures or expenses are recognized in the accounts and reported in the financial statements. In accordance with Governmental Accounting, Auditing and Financial Reporting (GAAFR), all proprietary funds (i.e. enterprise funds and internal service funds) are to be accounted for using the accrual basis of accounting and all governmental funds (i.e. debt service funds, general funds, capital projects funds, and special assessment funds) are to be accounted for using the modified accrual basis of accounting. These bases of accounting are defined in GAAFR as follows:

- Accrual basis - transactions are recognized when they occur, regardless of the timing of related cash flows.

- Modified accrual basis - revenues are recognized when they become both "measurable" and "available" to finance expenditures of the current period. Expenditures are recognized when the related fund liability is incurred except for: (1) inventories of materials and supplies which may be considered expenditures either when purchased or when used; (2) prepaid insurance and similar items which need not be reported; (3) accumulated unpaid vacation, sick pay, and other employee benefit amounts which need not be recognized in the current period, but for which larger-than-normal accumulations must be disclosed in the notes to the financial statements; (4) interest on special assessment indebtedness which may be recorded when due rather than accrued, if approximately offset by interest earnings on special assessment levies; and (5) principal and interest on long-term debts which are generally recognized when due.

The National Association of Regulatory Utility Commissioners (NARUC) prescribes the accrual basis of accounting for sewer utilities in their approved uniform system of accounts. Accounting standards for utilities are also often prescribed by a variety of state and local laws. When legally mandated accounting standards are not consistent with generally accepted accounting standards, such as the requirement of cash basis accounting in some states, the utility's accounting system must make it possible to satisfy both. Cash basis accounting, which recognizes transactions only when cash changes hands, does not present a utility's actual financial position or results of operation. Cash accounting omits recognition of assets and liabilities not arising from prior cash transactions including accounts receivable and accounts payable. On the other hand, accrual accounting includes these items in order to clearly present the utility's overall financial condition.

Government accounting standards are enforced in a variety of ways. Of particular importance is the standardization of auditing procedures and goals established by the American Institute of Certified Public Accountants (AICPA) as published in their industry audit guide, "Audits of State and Local Government Units", (ASLGU). Thus, in general, there is a common body of knowledge about how government accounting is to be conducted and how accounting activity is to be reported.

To ensure compliance with accounting standards, the financial management system must not only be set up to handle fund accounting on an accrual basis but must also be supplied with internal controls. Maintaining separate programs that can interface with each other for an integrated accounting system must be accompanied by security points to prevent unauthorized personnel from performing selected accounting duties or accessing protected data bases. These security points can include, but are not limited to, the following:

- Request for items to be purchased by inventory/stock personnel only;
- Preparation and issuance of purchase order by purchasing officer only;
- Receiving and issuance of items purchased by inventory/stock personnel only;

- Processing and payment of invoice by purchasing agent only;
- Processing and issuance of paychecks by payroll personnel only;
- Processing and distribution of customer bills by billing personnel only; and
- Processing (recording) of all journal entries and all ledger postings by bookeeper only.

Separation of accounting duties allows an employee to check another employee's work. The integrity of the system is ensured because all the individual processes that make up a particular transaction, such as the purchase of a truck, must balance in the accounting books. Controlling access to programs and files generally involves a programmed coding system which assigns each employee with his unique access code (not to be equivalent to an employee payroll number or any other employee number assigned for accounting purposes).

Other security points include the use of prenumbered forms generated by the computer which cannot be deleted or corrected, only voided, and the integration of "signature approval" functions (such as in the generation of voucher checks and paychecks and approval of the the operating budget) in the programs that must be completed prior to continuation of the computer program execution. Of major importance is the recording of data to computer-based accounting books. Transactions data, once entered, cannot be deleted or changed; it can only be adjusted by way of a separate entry in order for the accounting system to be auditable.

The following section describes each of the individual programs of the accounting element in more detail.

B. Activities

1. General Accounting (P-1)

The General Accounting program (P-1), illustrated in Figure III-2 at the end of this chapter, encompasses the journal entry, ledger posting, and financial report preparation functions. This program is the "bookeeping" part of the accounting element and requires information on accounts receivable (i.e. customer billings), accounts payable (i.e. invoices), payroll, and inventory. The basic processes (routines) of the program include:

- File Maintenance - This process is to be used to build the Chart of Accounts, update nonfinancial data in subsidiary and supporting files and define terms and conditions.
- Regular Accounting Function - This process includes the "normal" daily functions of recording purchase orders, invoices, journal entries, ledger postings, and budget transfers.
- Accounting Reports - This process is used to print user-specified accounting reports on a predetermined periodic basis or on demand, that are required for informational and audit purposes.
- Closing Entries - This process is performed at the end of the accounting period (i.e. fiscal year) and following the budget transfer process. It closes all expenditure and revenue accounts.

The chart of accounts is the numbering system used to classify accounting transactions within a predetermined coding structure. This system serves as the framework for recording, indexing, extracting, summarizing and reporting financial information. Many systems have been developed as guidelines for sewage utilities which vary as to the numbers and descriptive titles assigned to various types of transaction classifications. Managers should design a system to meet their utility's specific needs. This should be given careful consideration because the system forms the reference framework for the financial management data storage and retrieval system. Items to be addressed for providing the needed information include the following:

- Funds;
- Sources of revenue;
- Object of expenditures;
- Activities performed;
- Account types; and
- Programs or projects.

The "regular accounting function" routine is the key process of this program in that it is the point of entry for all financial transaction data, either manually for a stand-alone program or automatically for an integrated accounting system. The program accurately tracks all financial transactions (includes customer billings, inventory item purchases/vendor payments, and payroll) by using the input data supplied in the journal entry file to simultaneously record in the appropriate journals (registers) and post to the corresponding ledgers.

The basis of this program is the double-entry system which requires that for every entry made to the debit side of an account an entry would also be made for a corresponding amount to the credit side of another account. The double-entry basis of accounting is the most widely used system in municipal accounting because of its three basic elements:

- The dual effect of every transaction is shown;
- The accounts must always be in equilibrium; and
- The combined effect of all transactions must be shown as a decrease or increase in the surplus or deficit of each of the various funds.

These elements provide an inherent "check and balance" feature and present the total financial picture of the POTW, which are valuable characteristics for the accounting system of a self-sufficient agency.

In an integrated accounting system the Customer Billing program (P-3), the Payroll-Personnel program (P-4), and the Purchasing program (P-5), enter

financial transaction data (customer billings outstanding/paid, payroll amounts and invoice/voucher check amounts) to the journal entry file. This data is then accessed by the general accounting routine which uses the data to perform the actual recording to journals and posting to ledgers (subsidiary and general).

The reports to be generated in the accounting reports routine can include the following:

- Balance sheet;
- Income statement;
- Trial balance;
- Specified journals;
- Encumbrances/available balance report;
- Revenues (year-to-date/month-to-date) report;
- Cash requirements report;
- Cash reconciliation report;
- Analysis of equity report; and
- Budget vs. actual report.

2. Facilities Inventory (P-2)

The computer-based inventory program proposed for this system and illustrated in Figure III-3 at the end of this chapter, monitors and analyzes a perpetual inventory. It consists of the following four (4) routines:

- Add Item to Inventory - provides on-line updating of inventory through receiving and inspection of incoming stock or installed capital assets (includes items such as equipment, materials, tools, buildings, and tank structures).
- Adjustment of Inventory - allows for adjusting the computer Inventory File to match inventory status after taking a physical inventory.

- Issue Stock Item - receives stock issue requests and updates quantity on-hand.

- Report Generation - analyzes Inventory File to print various reports.

The first and second routines include a check of the quantity on-hand for the concerned stock items to determine if the quantity is adequate (greater than reorder point). If the quantity is less than the reorder point, a reorder notice is automatically printed. The routines can be designed to include the generation of a requisition form to accompany the reorder notice. The first routine also updates the purchase order file and the vendor file after receiving and inspection of incoming stock.

The last function, Report Generation, involves various analyses of the Inventory File which include:

- Determination of quantity on-hand for specified inventory items or all inventory items;

- Determination of reorder dates for specified inventory items or all inventory items;

- Determination of inventory's value based on average costing, first-in-first-out, or last-in-first-out methods for stock items and estimated costing for capital assets.

- Determination of utilization rate for specified stock items or all stock items; and

- Determination of backorder status.

Of particular concern to a wastewater utility manager is the establishment of an Inventory File that not only includes records for items stocked in a central warehouse or store room, but also records for all utility assets. Therefore, the Inventory File designed for this system will consist of three categories:

- Fixed assets - includes permanent capital assets such as land, buildings, and process structures (tanks, filter towers, drying beds, etc.);

- Machinery/equipment - includes pumps, air blowers, permanent flow meters, vehicles, furniture, etc.; and

- Stock items - includes items maintained in storage as spare parts (couplings, piping, etc.) or as consumable materials (oil, lubrications, chemicals, etc.) and items maintained for temporary uses (tools, radios, portable meters etc.).

Accounting for all utility assets in the inventory file is useful for appraising and assessing the total utility value; determining annual replacement costs (refer to Chapter IV); and maintaining histories for equipment maintenance, work loads, and performance (refer to Chapter VI, Section B-2).

The backbone to an efficient computer-based inventory system is a carefully planned and constructed alphanumeric coding system. This system should:

- Specify the physical area where the item or equipment is located (i.e. dewatering building, laboratory, and administration buildings);

- Identify the inventory item type (i.e. pump, truck, and meter); and

- Identify the specific associated process unit (i.e. secondary clarification, chlorination, and sludge digestion).

In implementing a coding system and developing a file, the utility manager should:

- Decide what constitutes a unit of equipment (inventory item);

- Discuss coding system with accounting personnel;

- Perform a physical inventory of all items to be included in the file; and

- Review the manufacturers' manuals for each equipment (inventory type) type.

3. Customer Billing Program (P-3)

The computer-based billing process consists of nine (9) routines for basic customer billing functions. The routines are illustrated in Figure III-4 at the end of this chapter and are summarized below:

- File Maintenance - updates all non-financial data stored in the Customer File. This data includes customer account control data (electric, water, sewer, and garbage), customer name and address, service address, user class (industrial, commercial, residential, institutional and governmental), and meter type and number.

- Cash Receipts and Adjustments - updates (addition or adjustment) customer accounts balances (current and previous) in the Customer File.

- Meter Data - updates individual water meter data and/or sewage meter data including readings for flow and maintenance history in the Customer File.

- Billing - generates and prints billing statements per customer account using data from the Billing File (cycle, books, bill date, due date, codes, rates etc.) and from the Customer File (meter readings and current balance).

- Delinquency Processing - updates delinquent history of appropriate customer accounts in the Customer File, applies penalty charges, and generates and prints delinquency notices and delinquency register.

- Penalty Processing - updates delinquent history of appropriate customer accounts in the Customer File, determines and applies penalty charges, generates an entry for the delinquency register, and generates and prints delinquency notices.

- Shut-off Processing - generates and prints shut-off notices for appropriate customer accounts.

- Specials - generates and prints mailing labels, meter book labels, customer account listings (alphabetical by name and includes address), and/or account's status listing (selected account(s) or all accounts on file).

- Reports - generates and prints daily reports (customer file maintenance and cash receipts and adjustments), billing reports (summary register and statements), delinquency/shutoffs reports (register and notices), and/or specials (labels, alphabetic customer listings, and status listings).

The design of a computer-based billing system includes the option of automatically sending data for journal entry (accounts receivable) to a computer-based general accounting system (General Accounting Program, P-1) via system interface.

4. Payroll - Personnel Program (P-4)

The major part of this program is concerned with the employee payroll system. In addition to these basic payroll and paycheck generation functions, a routine was included to access timesheet data and employee records to produce personnel reports. This added function was provided to assist a utility manager in an annual employee review process and make him more aware of the employee's present status and capabilities and future potential. All routines are illustrated in Figure III-5 at the end of this chapter.

The following list is a brief description of the eight (8) routines in this program.

- Employee File Maintenance - updates general data stored in the Employee File which includes name, address, ID number, hourly rate, salary, and leave data and prints out an employee file listing.

- Tax File Maintenance - updates tax rate information for the employees' witholdings and prints out a tax rate file listing.

- Timesheet Processing - updates the timesheet data stored in the Employee File and generates and prints an employee timesheet listing.

- Payroll Calculation - determines the gross dollars from timesheet data, the appropriate deductions, the resulting net pay and the leave totals to be stored in the Employee File. Also updates pay and deduction history for each employee. Printouts include employee file listing, payroll register, and payroll deduction register.

- Payroll Check Processing - generates and prints paycheck and stub (or stub only) for each employee to be paid in the present period.

- Payroll Report Generation - generates and prints reports per user specifications. These reports can include labor distribution, wage tax, union dues, credit union,

unemployment compensation, social security (FICA), and United Way.

- o Year End and W-2 Processing - generates and prints W-2 Forms for employees, purges terminated employee records from Employee File, and zeros-out all month-to-date, quarter-to-date, and year-to-date data fields in the Employee File.

- o Personnel Report Processing - analyzes data in employee file to generate various management reports per individual employee or department or for total utility, to evaluate employee(s) status and performance. These reports include: Time Sheet Summary Report, Salary and Classification Report, Performance Evaluation Report, and Certification - Registration - Education Report.

The design of this computer-based payroll-personnel system should include the option of automatically sending payroll data for journal entry to a computer-based general accounting system (General Accounting Program, P-1) via system interface.

5. Purchasing Program (P-5)

The purchasing functions incorporated into this program are illustrated in Figure III-6 at the end of this chapter. They include purchase order initialization and processing, bid selection and processing, and invoice processing and payment. This program is separated from the general accounting and inventory programs, in which it is normally included in existing packaged programs, because the separation offers an inherent security point. The person "purchasing" the goods and recording the relevant data is not the same person "requesting and receiving" the goods or "accounting" for their costs in the permanent records of journals and ledgers. Five (5) routines were designed for this program which are summarized below.

- o Initiate Purchase - selects a supply vendor from existing vendor file, generates a new purchase order or updates an existing outstanding blank purchase order, and generates a request for quotation when required.

- o Receive Bids - updates purchase order file with bid data, notes selection of vendor, and prints a purchase order.

- Receive Goods - updates purchase order file with receiving report data and flags discrepancies between what was ordered and what is received.

- Receive Invoice - updates purchase order file with invoice data and flags discrepancies between what was ordered, what was received and what is billed, creates a new record in the invoice file, and updates the journal entry file.

- Payment Processing - generates voucher check(s) for invoices due, updates invoice file upon payment, and updates the journal entry file.

- Report Generation - generates listing of purchase order records retired and/or outstanding, listing of invoice records paid and/or unpaid, and listing of checks for specified time period.

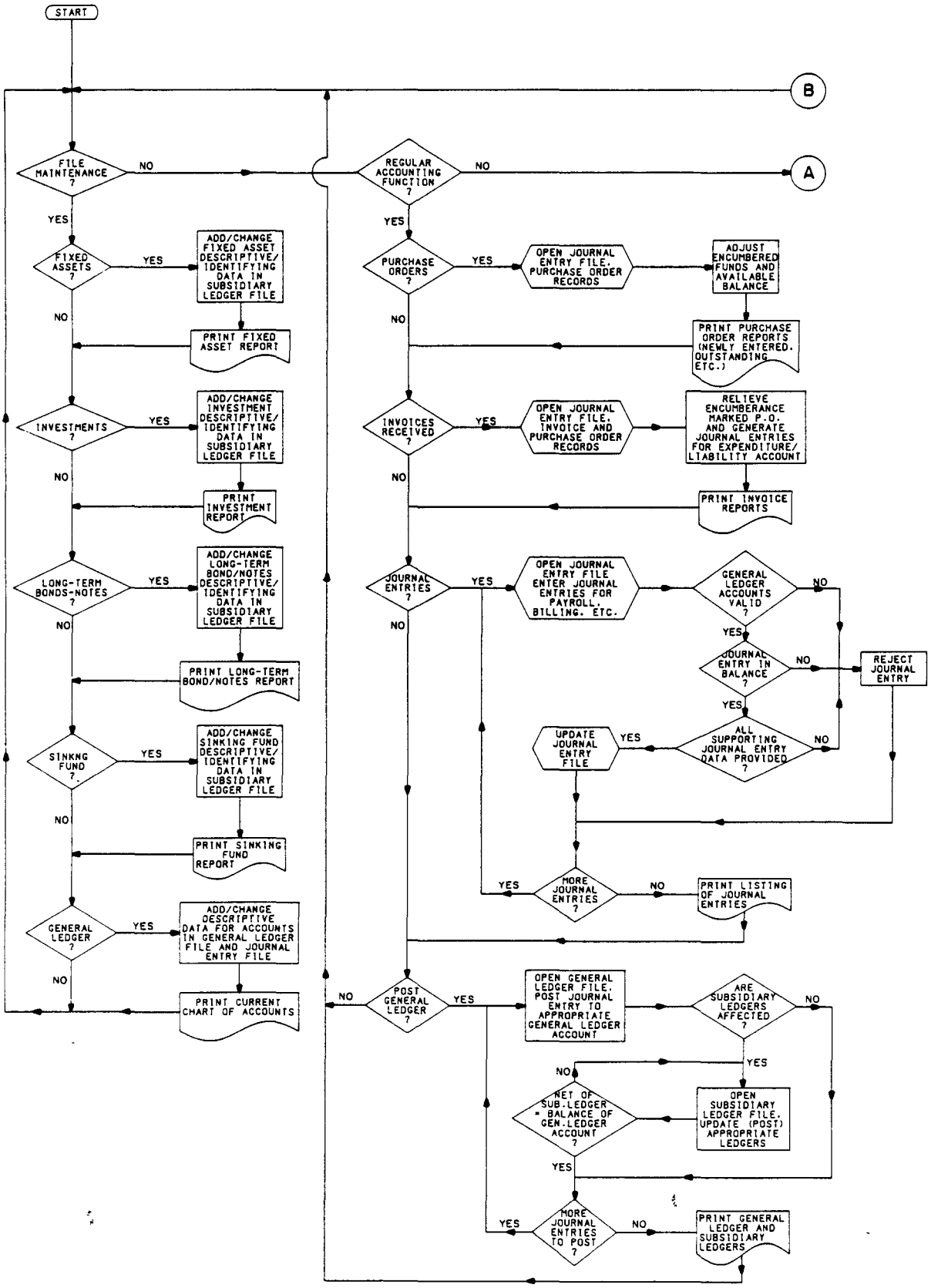

LEGEND

REFER TO FIGURE II-1

FIGURE III-2

GENERAL ACCOUNTING PROGRAM P-1 1 of 2

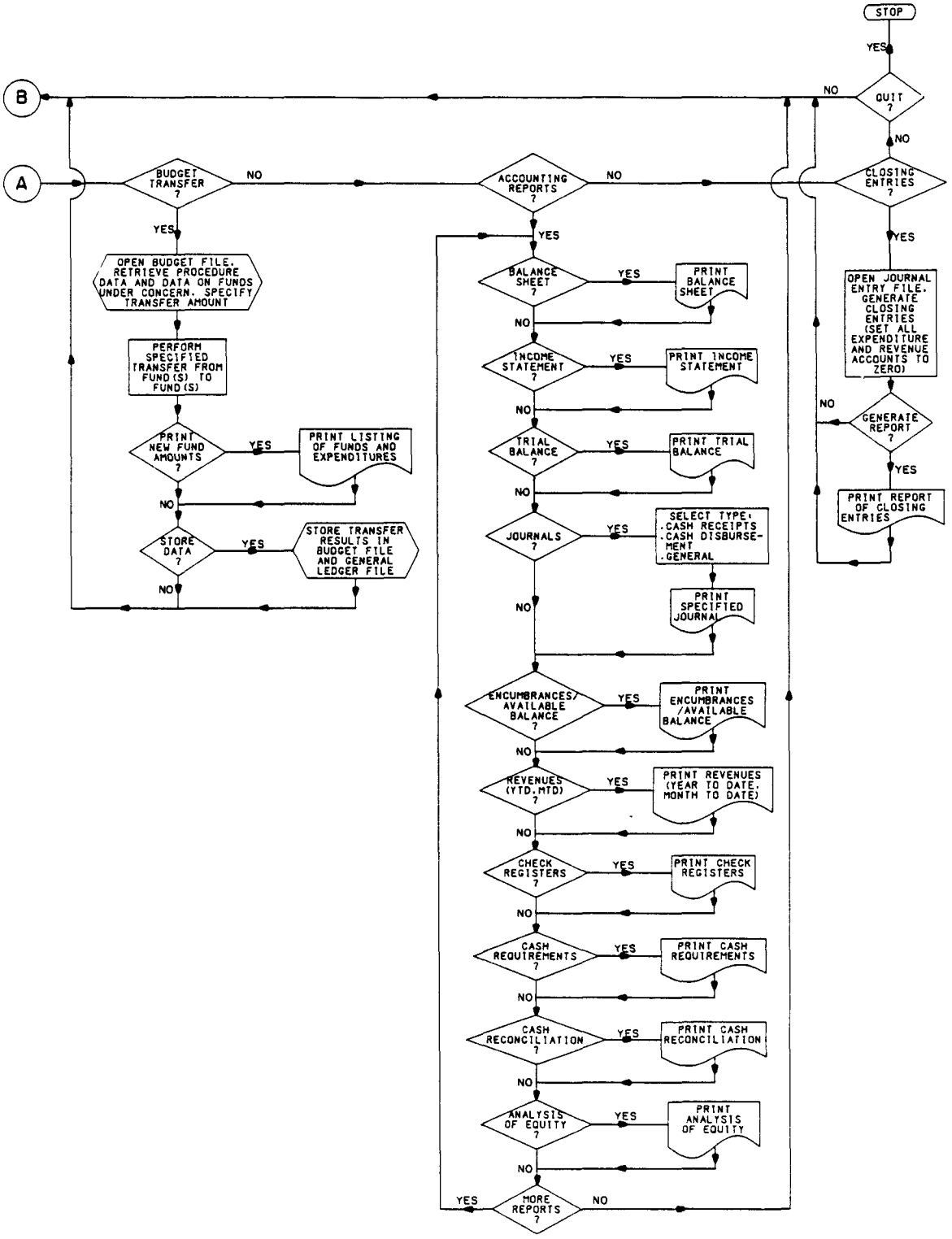

LEGEND

REFER TO FIGURE II-1

FIGURE III-2

GENERAL ACCOUNTING PROGRAM P-1 2 of 2

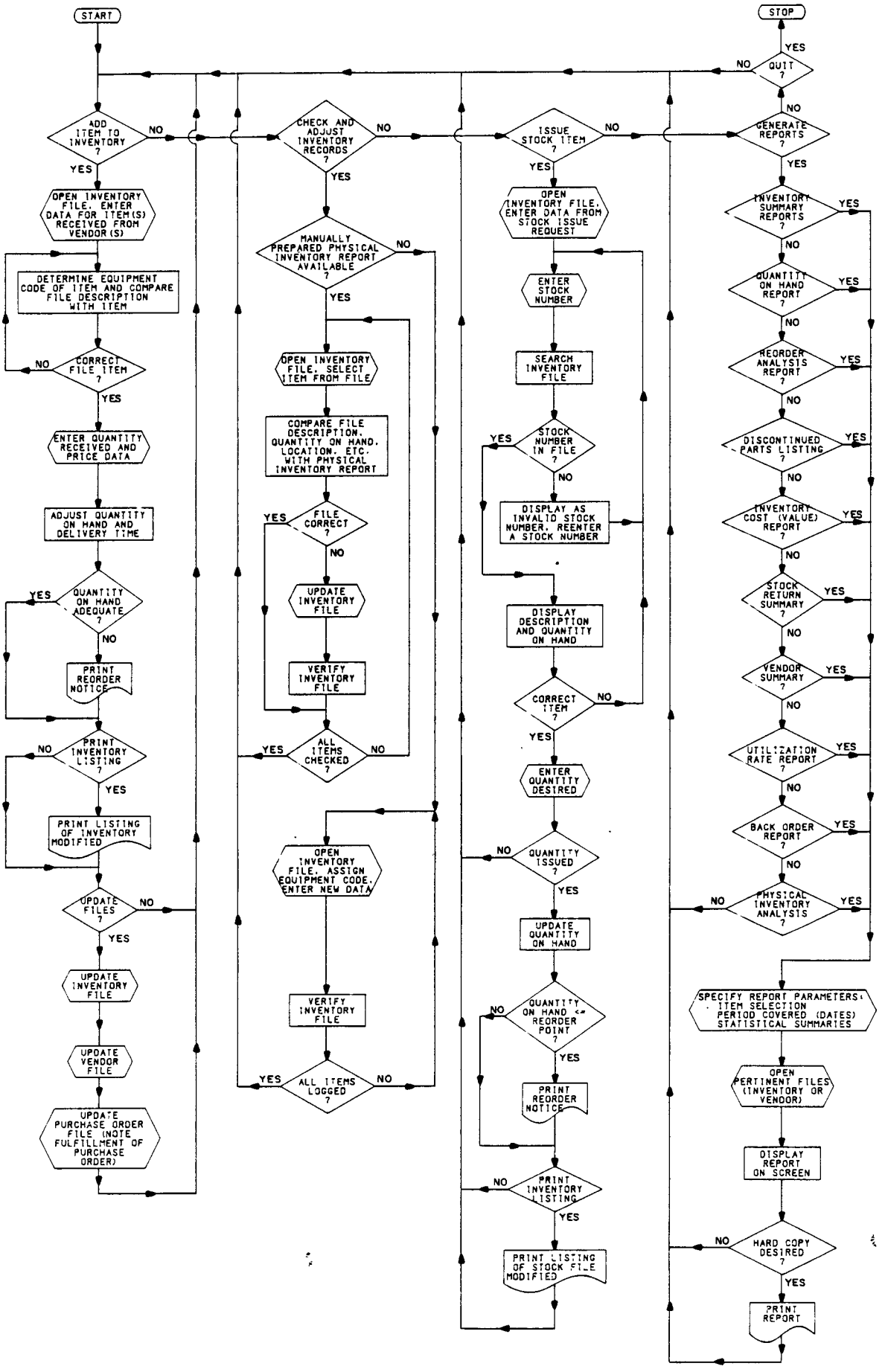

LEGEND

REFER TO FIGURE II-1

FIGURE III-3

FACILITIES INVENTORY PROGRAM P-2

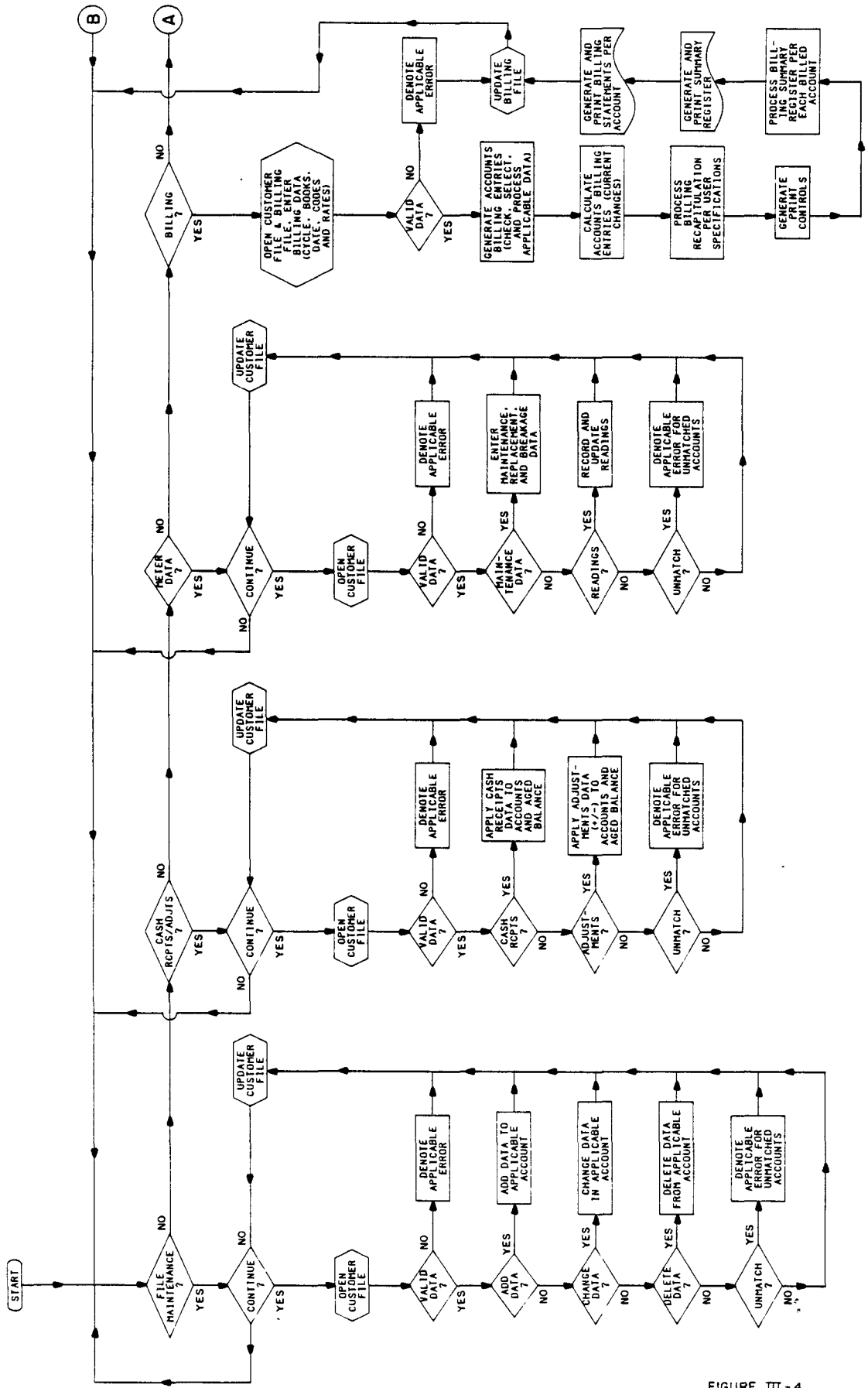

LEGEND

REFER TO FIGURE II-1

FIGURE III-4

CUSTOMER BILLING PROGRAM P-3 1 of 2

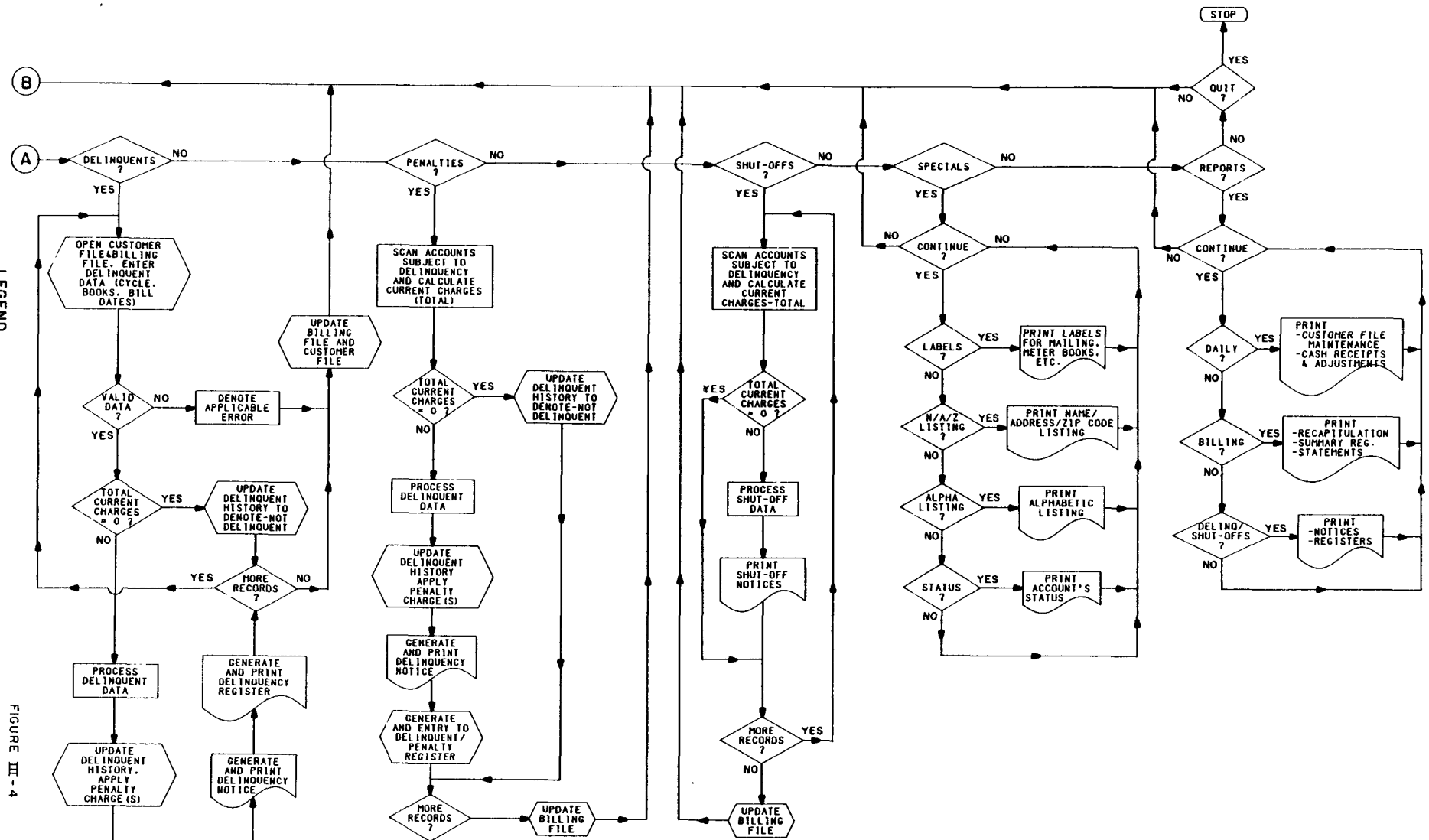

LEGEND

REFER TO FIGURE II-1

III-25

FIGURE III-4

CUSTOMER BILLING

PROGRAM P-3 2 of 2

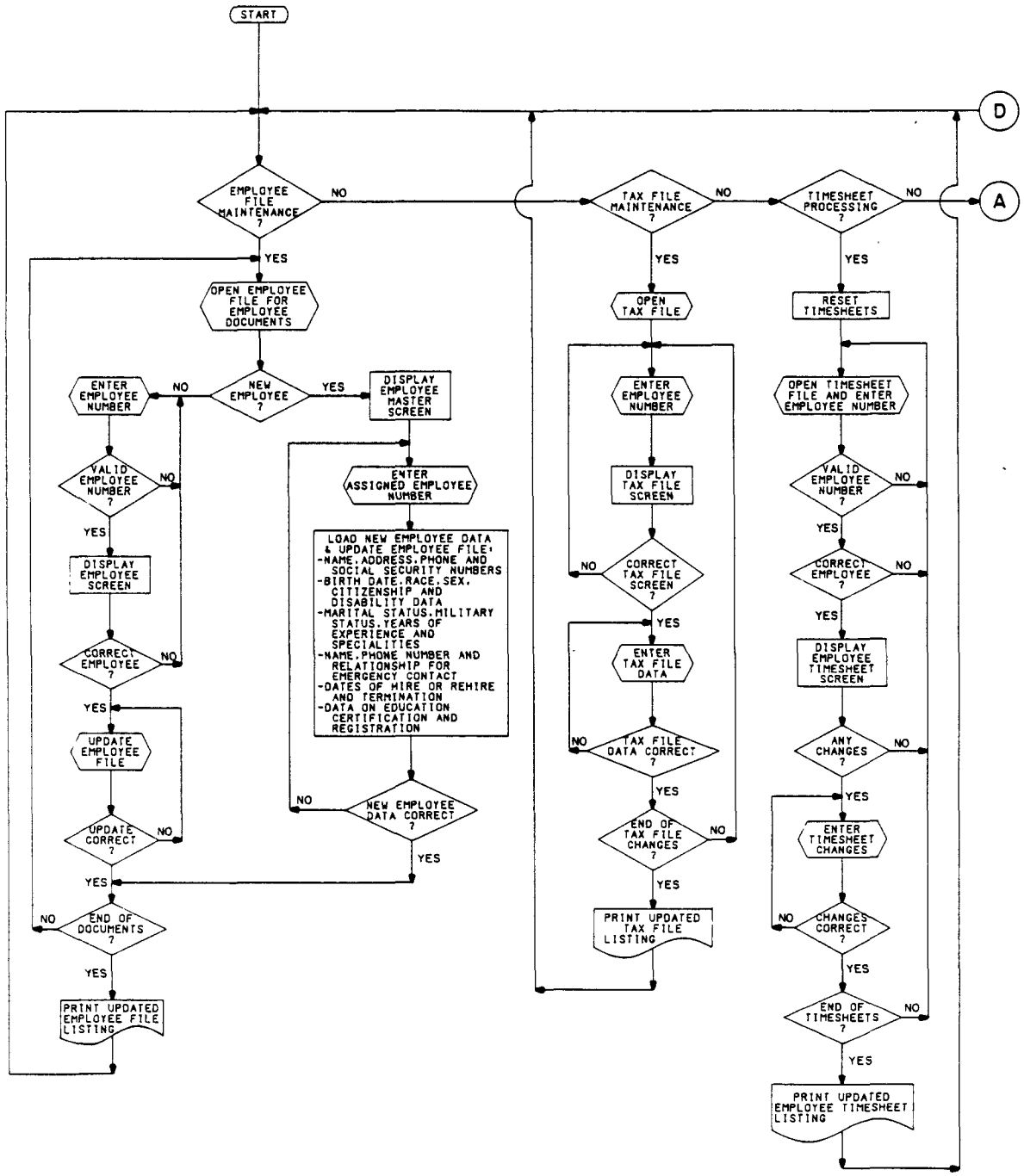

LEGEND

REFER TO FIGURE II-1

FIGURE III-5

PAYROLL-PERSONNEL PROGRAM P-4 1 of 3

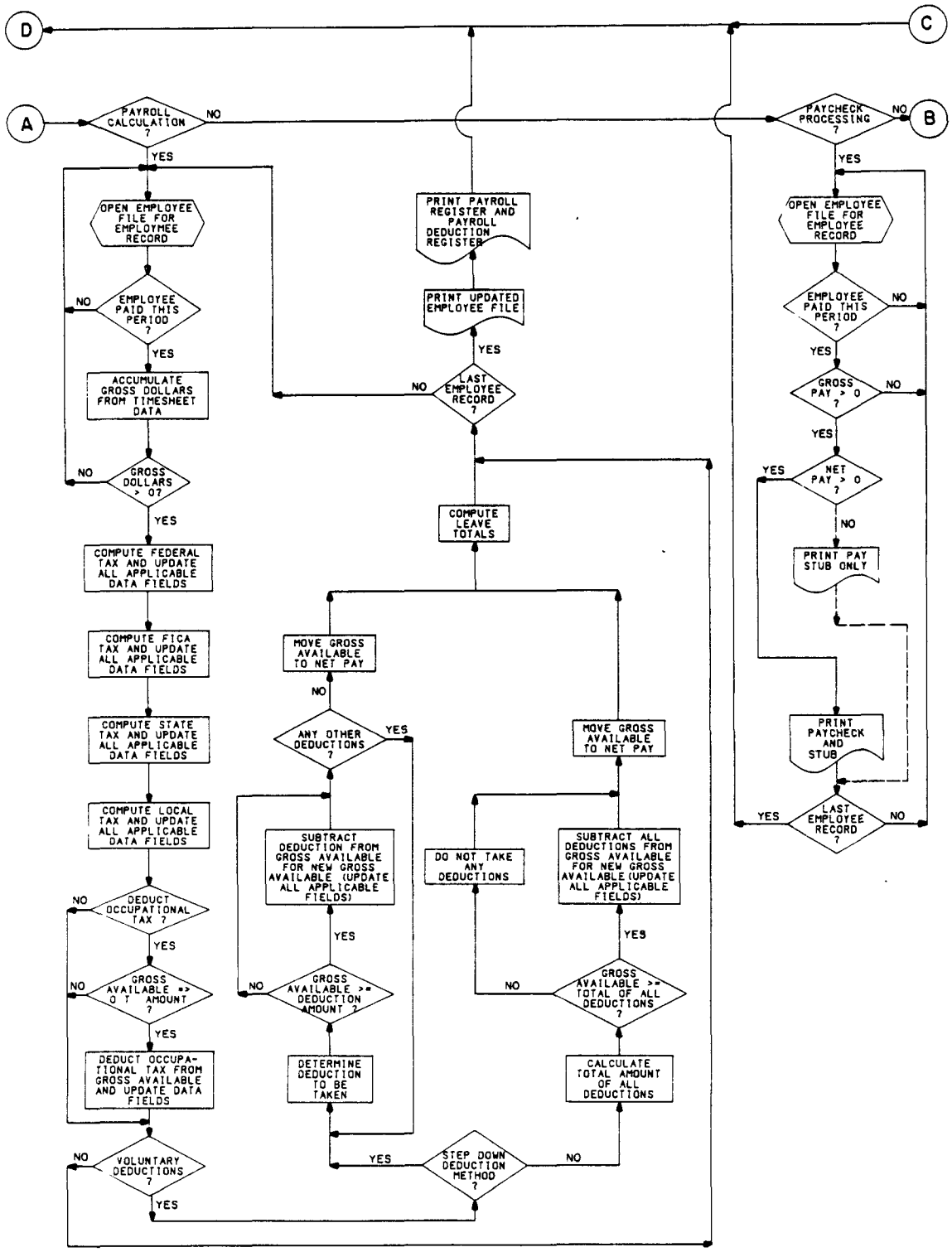

LEGEND

REFER TO FIGURE II-1

FIGURE III-5

PAYROLL-PERSONNEL PROGRAM P-4 2 of 3

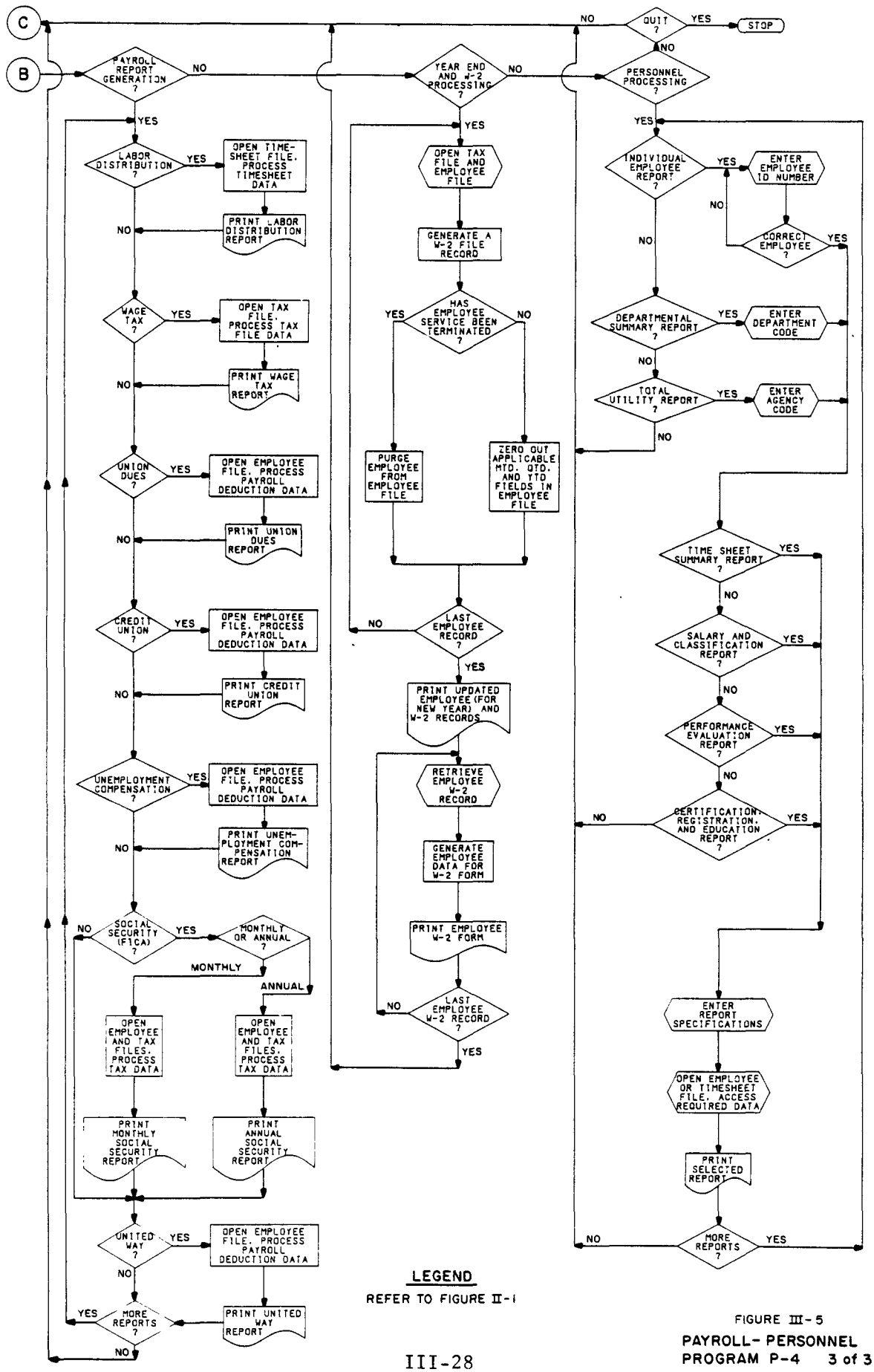

LEGEND

REFER TO FIGURE II-1

FIGURE III-5

PAYROLL- PERSONNEL PROGRAM P-4 3 of 3

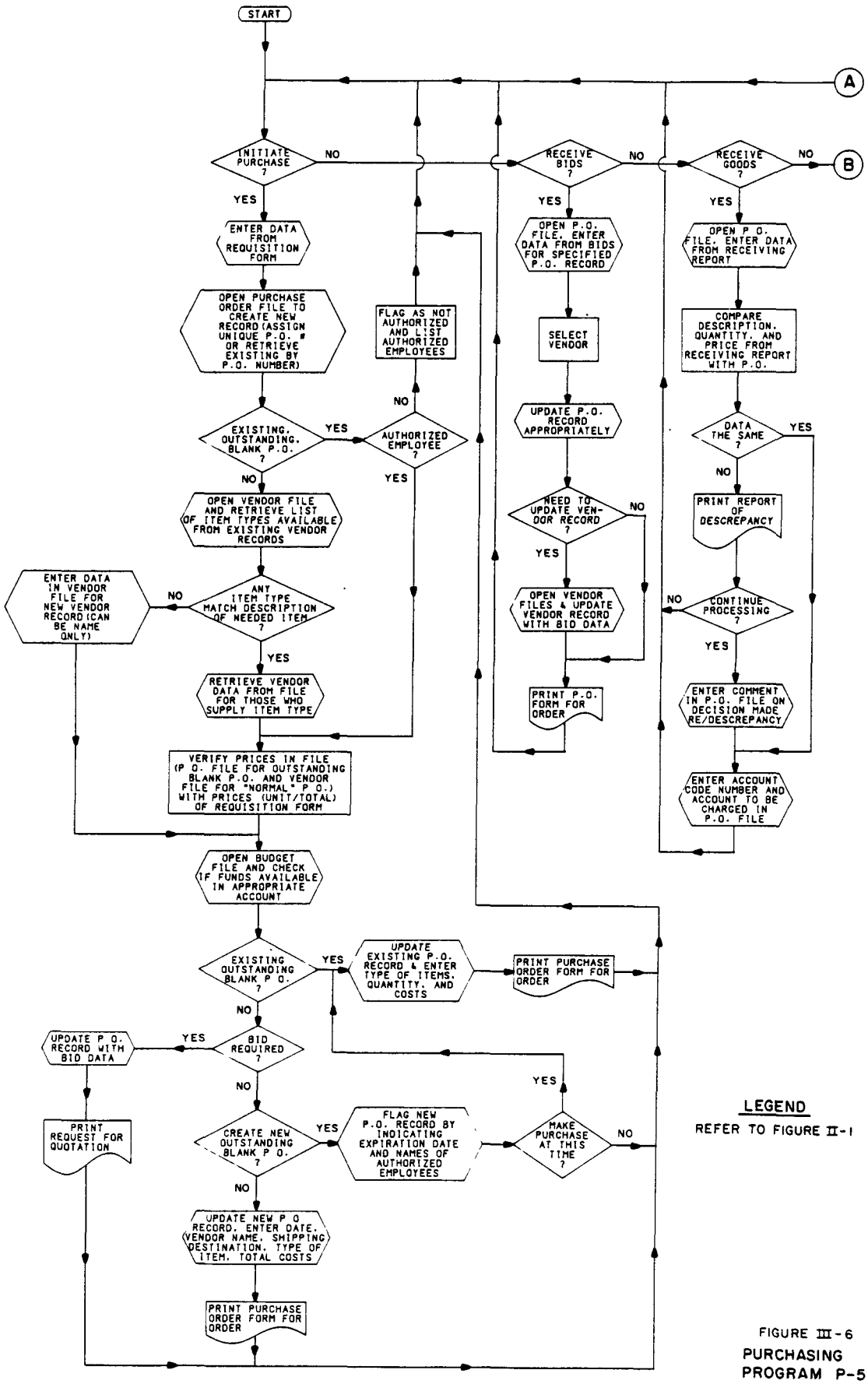

LEGEND

REFER TO FIGURE II-1

FIGURE III-6
PURCHASING PROGRAM P-5
1 of 2

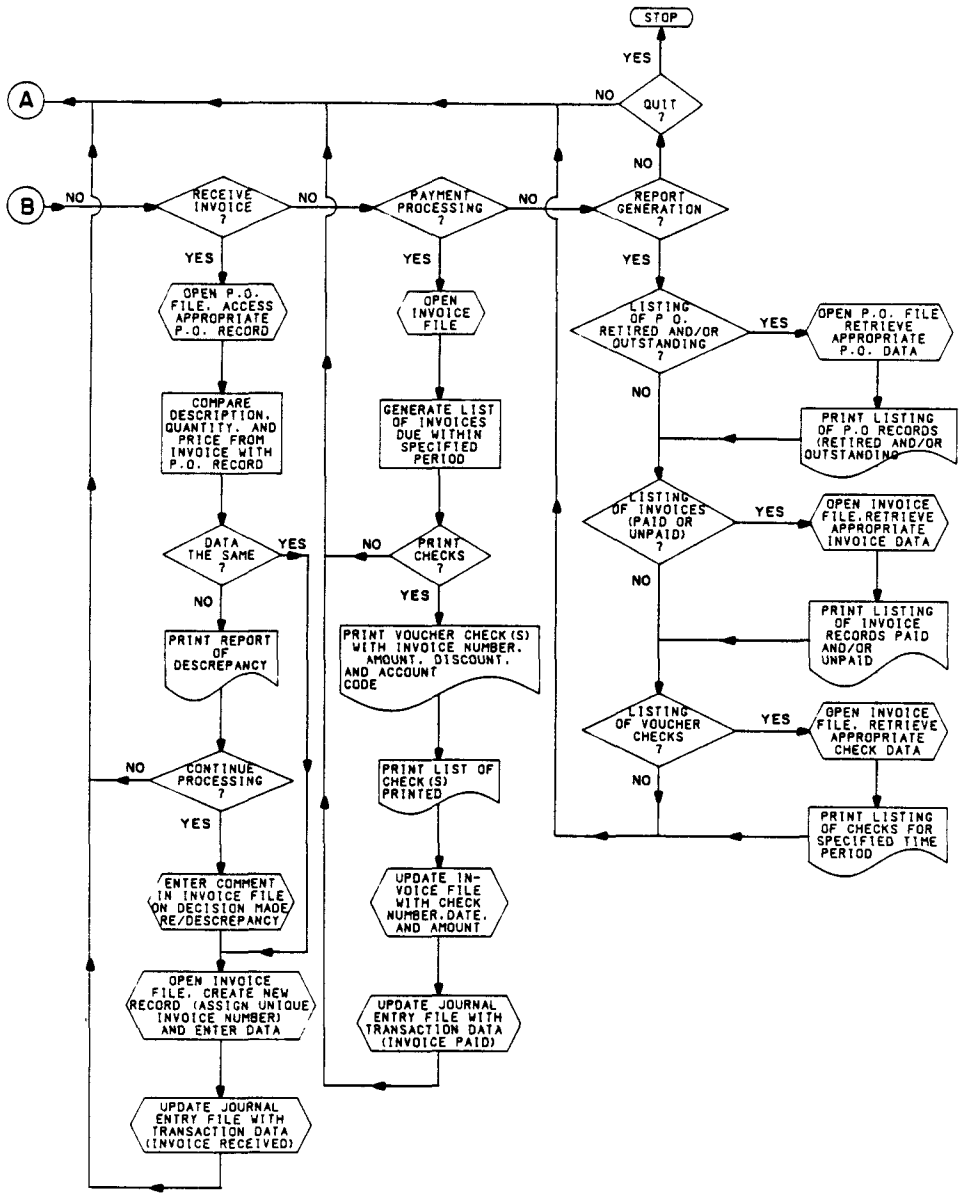

LEGEND

REFER TO FIGURE II-1

FIGURE III-6

PURCHASING PROGRAM P-5

2 of 2

IV. REPLACEMENT RESERVE

A. Overview

Included in the term "operation and maintenance" costs, as used in EPA's regulations, are replacement costs. These costs are defined in section 212(3) of the Clean Water Act as "...Those expenditures for obtaining and installing equipment accessories, or appurtenances during the useful life of the treatment works necessary to maintain the capacity and performance for which such works are designed and constructed." The level of replacement reserve needed to meet these costs are those needed to maintain status quo in terms of capacity and performance of the physical plant of a grantee municipality's wastewater treatment enterprise during its useful life. Therefore the financial management system includes a procedure for determining an annual replacement reserve for the operating budget to cover anticipated replacement costs for the items defined as "machinery and equipment" in the inventory file (refer to Appendix E). Also included in the reserve are amounts to cover the replacement of "perishable" components of permanent structures (fixed assets of inventory file). These components are necessary for the continuous operations of a POTW during its useful life and address the replacement of "appurtenances" as required in the Act.

To determine an annual reserve amount with an accounting basis, this manual uses a mathematical procedure that defines the amount as a function of the calculated annual depreciation. This requires determination of charges (or rates) representing the depletion of an asset's value and subsequently its rate of replacement for all machinery, equipment, equipment accessories, and appurtenances. Used in these calculations are values for the purchase price (includes installation costs), the salvage value (or removal costs) at the end of the asset's service life, the date of purchase (or usage data), and the service life in years (or usage). In an inflationary economy, replacement costs will exceed calculated appropriations that are based on purchase prices equal to the asset's historical or original costs (present worth at time of purchase); therefore the methodology described in this manual incorporates an adjustment factor, such as the Engineering News-Record (ENR) or EPA

Construction Cost Indices, to index the replacement base (the original cost) to price increases. It is noted that this inflation adjustment factor is not permissible when calculated depreciation amounts are used for recovery of initial capital investment by way of tax deductions (for privately-owned treatment facilities) or by including investment recovery as a cost of service in the rate-setting process.

Currently most small POTW's do not practice any form of asset depreciation for any purpose though many privately-owned utilities utilize depreciation of assets to recover the initial investment of the physical plant. This particular practice of recognizing calculated depreciation amounts as a cost of service, which is prohibited for POTW's, leads to having utilities use depreciation reserves as a cash flow and not for replacement expenses. A separate replacement reserve based on calculated depreciation expenses should be established to ensure that the utility can recover sufficient revenues for replacement expenditures. It should be understood that the term "depreciation" as used in reference to this system refers only to a computation methodology and not the subject which is replacement reserve.

There are various methods to compute annual depreciation rates which may be used to estimate annual replacement expenses including the following:

1. Straight-line method - distributes the replacement cost of an asset in equal amounts to each accounting period during the total estimated service life.

2. Unit-of-production (usage) method - distributes the replacement cost of an asset in equal amounts to each unit of usage during the total estimated service life.

3. Sum-of-the-year's digit method - determines the annual replacement amount by applying a constantly declining fraction to the service value of an asset.

4. Declining-balance method - determines the annual replacement amount by applying a constant rate (based on the salvage value to purchase cost ratio) to the declining undepreciated balance of the asset cost.

5. Double-declining-balance method - determines the annual replacement amount by multiplying the undepreciated balance of the asset cost by a percentage that is twice the annual rate (computed

without adjustment for net salvage value) associated with the straight-line method.

6. Compound-interest method - determines the annual replacement amount to be equal to the sum of the annuity, defined as the annual contribution made to a theoretical sinking fund (refer to item 7, below), and the annual interest on the compound amount of the accumulated annuities.

7. Sinking-fund method - determines the annual replacement amount to be equal to an annuity that, at an assumed rate of interest compounded annually over the asset service life, will equal the depreciable cost (original cost less estimated net salvage value).

Selecting a specific method depends on the type of assets to be replaced, the utility's particular financial condition, and the analytical capabilities of the utility (includes level of staff expertise and computerization). The different methods presented above do not change the total replacement reserve amount but the pattern of accrual is changed.

The accelerated methods, sum-of-the-year's digit, declining-balance, and double-declining-balance, have patterns that are very similar to the actual decline of most equipment in that service value expires more rapidly in the early years than in the later years. These methods offer advantages when used because more funds are available when needed for replacement during the initial operating years and buffer against the financial blow of emergency replacements that are not uncommon for wastewater treatment facilities. However, they can cause initial sewer service charges to be higher in order to recover funds for the reserve. This is of particular concern to a POTW designed for a rapidly expanding service area whose initial users could already be experiencing high service charges.

The compound-interest and the sinking-fund methods result in increasing annual accruals for replacement reserves and provide the slowest rate of reserve accumulation. The decelerated methods usually have little or no relationship to the way in which the service value of equipment expires but have potential use in replacement reserve calculations. They are based on the "time value of money" concept and require small amounts of cash capital to be reserved in the beginning with increasing amounts over the course of the

asset's service life thereby not keeping funds frozen in a reserve during the time of the funds greatest present worth.

The straight-line method is the most popular method due to its simplicity. Incorporating a usage factor with the straight-line method, which is time-based (i.e. related strictly to duration of ownership), results in the unit-of-production method. A usage factor can be defined as amount of time (hours, days, etc.) in service versus length of time owned or units of output (sludge generated, water treated, etc.) versus length of time running or owned. Usage data to calculate this factor includes equipment runtimes, number of equipment start/stops, and frequency of loading rates. Application of the unit-of-production method depends on the availability and accuracy of equipment usage data.

Figure IV-1 is the operations flowchart for this element and includes two programs: the Equipment Life and Depreciation program (P-6) and the Annual Replacement Reserve program (P-7). The first program is to be used to develop schedules for equipment life and annual depreciation rates and charges, while the second program is designed to generate a replacement reserve report to assist in the annual budget preparations. The primary source of data for these programs is the inventory file. The facilities cost file serves as the storage file for the cost information generated by program P-7. The accuracy of the information in the resulting depreciation schedules and the sufficiency of the estimated annual replacement reserve are highly dependent on the level and quality of recordkeeping; therefore, a computer-based inventory file is essential to this program.

The magnitude of funds accumulating for replacement, as with any other operating cost, must be reviewed annually and adjusted periodically to align revenue with actual costs. Amounts reserved for replacement should not be allowed to grow to proportions not realistically needed for near term expenditure and upon disbursement should be replenished within the scope of the approved revenue mechanism. It should be noted that component replacement is a management option to continued component maintenance, whereby maintenance (or lack of) extends or shortens the component's "service life". Deferrence of maintenance to a point of where component replacement is no longer the solution

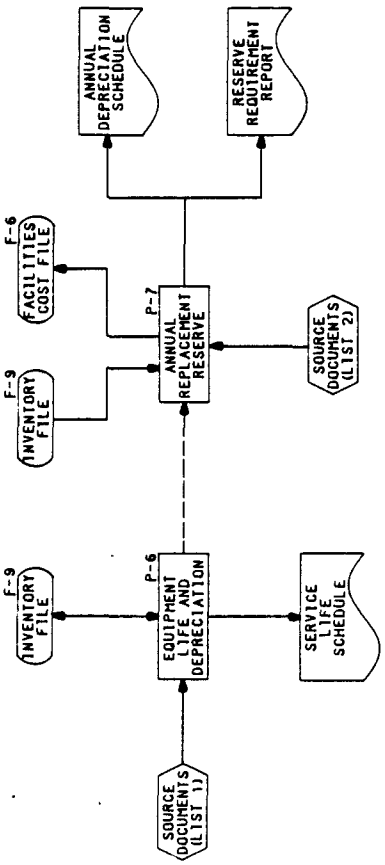

FIGURE IV-1

REPLACEMENT RESERVE OPERATIONS FLOWCHART

FIGURE IV-1

REPLACEMENT RESERVE OPERATIONS FLOWCHART (Cont'd.)

List 1 - Source Documents, Equipment Life and Depreciation, P-6

- Purchase Order Operations
- Manufacturer's Manual
- Operations Report (usage data)
- Plant Turnover Study
- Retirement Frequency Curves (or Survivor Curve)
- Equipment Maintenance Record
- Construction Cost Index Table
- Fixed Asset Record

List 2 - Source Documents, Annual Replacement Reserve, P-7

- Inventory Record

to functional deficiency and reconstruction (capital outlay) is the only alternative is to be discouraged. The incorporation of a standardized replacement reserve calculation procedure, manual or computer-based, with an accounting basis such as proposed here would be a valuable tool to POTW management in that it will provide accurate, up-to-date, total and itemized, amounts to be accounted for in determining the replacement costs. These cost estimates, along with other service costs, are then utilized by the revenue generation element presented in Chapter V.

B. Activities

1. Equipment Life and Depreciation Program (P-6)

Basically, there are four routines in this program, as illustrated in Figure IV-2 at the end of this chapter, which result in the development of "schedules" for equipment life and annual depreciation rates and charges. These routines include estimating the asset's service life and net salvage value, modifying the asset's original costs, and applying the selected depreciation formula to the service value of the equipment. Replacement reserve calculations should be applied to all machinery and equipment inventory items. These items are defined as that part of a grantee's assets that are procured and installed rather than fabricated, erected or constructed on site and include external piping, wiring and moving parts which perform a function. In order to determine the replacement reserve for appurtenances as required by federal regulations, calculations should also be applied to the "perishable" components of fixed assets (permanent structures, non-mobile heavy/buried equipment, and buried piping, duct work, or electrical connections). The perishable components can be defined as a percentage of the corresponding asset's total value and subsequently treated as separate items in the calculation process.

For each item involved, the resulting schedules should include the equipment code number (or corresponding fixed asset code number), description, original cost, inflated replacement cost, salvage value, service life, replacement (depreciation) rate(s) for each year of service life, book value, and cost of removal (if applicable). This program only needs to be executed once for any one item (unless its salvage value or service life are to be modified or a different depreciation formula is preferred) because the schedule will be maintained in the computer file as a reference source (input) to determine the annual replacement reserve by executing program P-7.

The following sections describe the routines and specify the necessary functions to be incorporated into an activity program that is to process inventory data for the development of equipment life and depreciation schedules.

a. Estimating the Service Life of an Item

The service life of an equipment item can be measured in terms of calendar time or in terms of usage. Usage can be defined as service hours, units of output, or number of start/stop sequences. Generally, the calendar time (number of months or years since purchase, installation, or start-up of equipment) is the service life measure used because of the availability of data. However, with the coming of automated process control for treatment operations, accurate usage data can be readily available from computer or local-microprocessor storage. Equipment subjected to abnormal usage, such as filters having an average loading rate greater than the average rate specified during design (therefore subject to excessive usage) or a pump operating only in stand-by mode (therefore subject to minimal usage) should make use of a service life measured in terms of usage or, at the very least, have their calendar time service life adjusted according to their atypical usage. Service life is a variable and is affected by level of expenditure for maintenance. This program allows for user-adjustment of service life for cases where a maintenance program or lack of one has a significant effect on a particular equipment's service life.

The input for this routine can be in the form of specific service life values for individual units or line-item group averages for items having similar usage characteristics, physical appearance, and function, and which operate under the same general conditions. The average service life of a group is based on a composite or weighted average of the service lives of the units within the group. The source of this information can be plant turnover studies, actuarial studies, "generally accepted" values, or manufacturer's data. Generally, small POTW's do not have the manpower or funds for plant turnover studies, and many new facilities have not been in operation long enough for any valid statistics to be made based on their records. Conducting actuarial studies based on equipment mortality records to generate retirement frequency curves are also not generally within the capabilities of most small POTW staff members. One possible alternative is to use the survivor curve technique which involves a comparison of the utility's own retirement expectancies with the more complete data of widely accepted survivor curves such as the Iowa Curves developed by the Iowa State College of Engineering

Experiment Station (ISC Bulletin Nos. 125 and 155). The last two sources, "generally accepted" values and manufacturer's data, are the most readily available sources. The National Association of Regulatory Utility Commissioners maintains tables of typical average service lives (years), salvage rates (percent), and depreciation rates (percent) for utilities which could be used as guidelines. The POTW's engineers and accountants should collaborate on the development of a plant and equipment schedule and itemize estimated replacement frequencies (service life).

The service life routine of program P-6 generates service values for each equipment item to be considered in determining the annual replacement reserve. This routine provides the following options:

- Using service life based on calendar time (years) or on usage (only when there are readily available records on equipment operations) and
- Using average service life values (user-determined), remaining service life values (assigned to groups based on stored survivor curve data from the historical records of the inventory file), or individual service life values (user-determined).

b. Estimating Net Salvage Value

The net salvage value of an asset is defined as the expected value of that asset upon retirement minus the estimated cost of removal. The net salvage value and the cost of removal are usually expressed as a percentage of the item retired so that they are not significantly affected by absolute cost fluctuations. Estimating the net salvage value is done in three steps:

- Enter a user-determined retirement value or select a value stored in the historical records of the inventory file for each equipment type (group). These stored values are based on the utility manager's (or engineer's) estimate or on historical data when available;
- Subtract the estimated cost of removal which is user-determined or retrieved from the historical record data or the inventory file; and

- Modify (add to or subtract from) the net salvage value to account for functional depreciation (inadequacy or obsolescence) as determined by the user. Also, any items known to be experiencing unusually frequent operation problems as noted from maintenance records should have their salvage value adjusted accordingly.

c. Adjusting Original Costs

As stated previously in this chapter, in an inflationary economy, using the original costs for the depreciation base will not provide enough funds for actual replacement costs; therefore, these costs are adjusted by using a cost index. The POTW's engineers and accountants should collaborate in the effort needed to determine the costs. The following indices are available and can be stored in a computer file for easy application:

- Engineering News-Record (ENR) Construction Cost Index - monthly, national average values; and
- Environmental Protection Agency (EPA), Office of Water Program Operations, "Construction Cost Indexes" - national averages for small city conventional treatment plant, large city advanced treatment plant, and complete urban sewer system (by quarters); "U.S. City Averages" for sewer and sewage treatment plant (by months); and "Major City" values for plant and sewer (by quarters).

d. Selecting and Applying a Depreciation Formula

This routine consists of the user selecting a depreciation formula based on the utility's needs. The seven formulas (methods) described previously are those that should be available. Different formulas can be selected for different asset types depending on their pattern of decline or on the utility's financial condition.

The resulting schedules for each item to be incorporated into the estimated replacement reserve are stored in the inventory file for use as input to program P-7.

2. Annual Replacement Reserve Program (P-7)

Program P-7, illustrated in Figure IV-3 at the end of this chapter, retrieves the values for replacement (depreciation) rate or charge from the schedules created by the Equipment Life and Depreciation program (P-6) for all the machinery and equipment items of the inventory file. The rate or charge value for each item is then used to determine the accrued replacement reserve. This accrued value can be represented as a separate value for each item of concern or as a subtotal value for each line-item group. It should be noted that once an item has reached its service life it will be flagged and its depreciated value will be maintained at the current value until it is removed from service at which time it will be replaced using replacement reserve funds or deleted from the file if the function performed is eliminated. The report generated from this program has the option of being printed in one of two forms:

- Listing of accrued replacement reserves (depreciation) for all items for each functional (activity) group of accounts such as preliminary treatment, collection, primary treatment, etc.; or

- Listing of accrued replacement reserves (depreciation) for all line-item groups with a breakdown for each functional group within a given line item group.

The total of either of the two listings is the total annual replacement reserve which can be recorded as an operations expense once a year through a journal entry. A consideration in determining the annual replacement reserves is the accounting for interest earned on the accumulating reserve. Assuming that the monies accumulating in a reserve are not used immediately, particularly for major items with relatively long service lives, the "idle" monies should be invested to generate interest. The mathematics involved require the determination of a reserve depletion rate in order to calculate the remaining interest-accumulating amount and therefore the appropriate adjustments (decreases) to the previously estimated annual reserves.

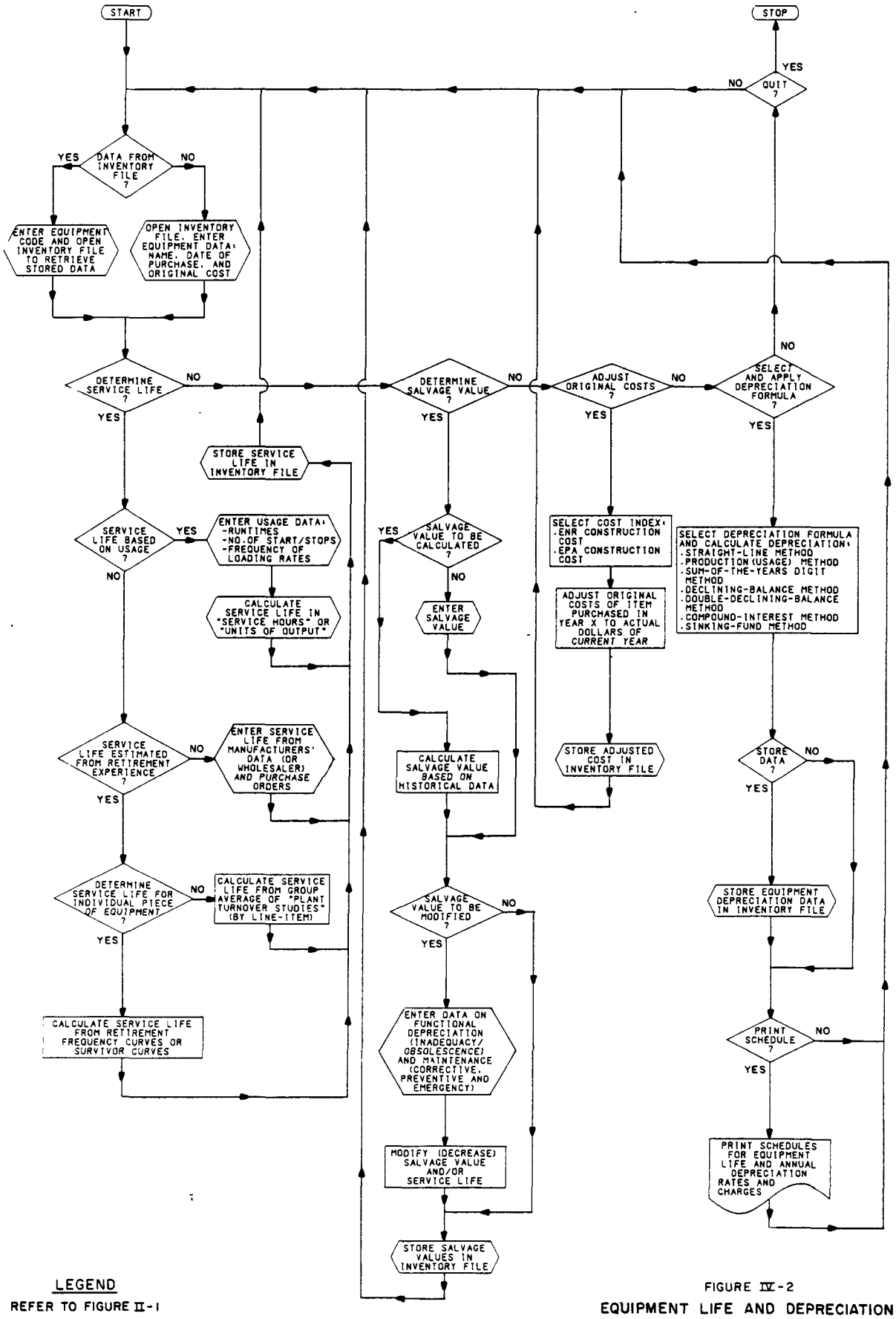

LEGEND

REFER TO FIGURE II-1

FIGURE IV-2

EQUIPMENT LIFE AND DEPRECIATION PROGRAM P-6

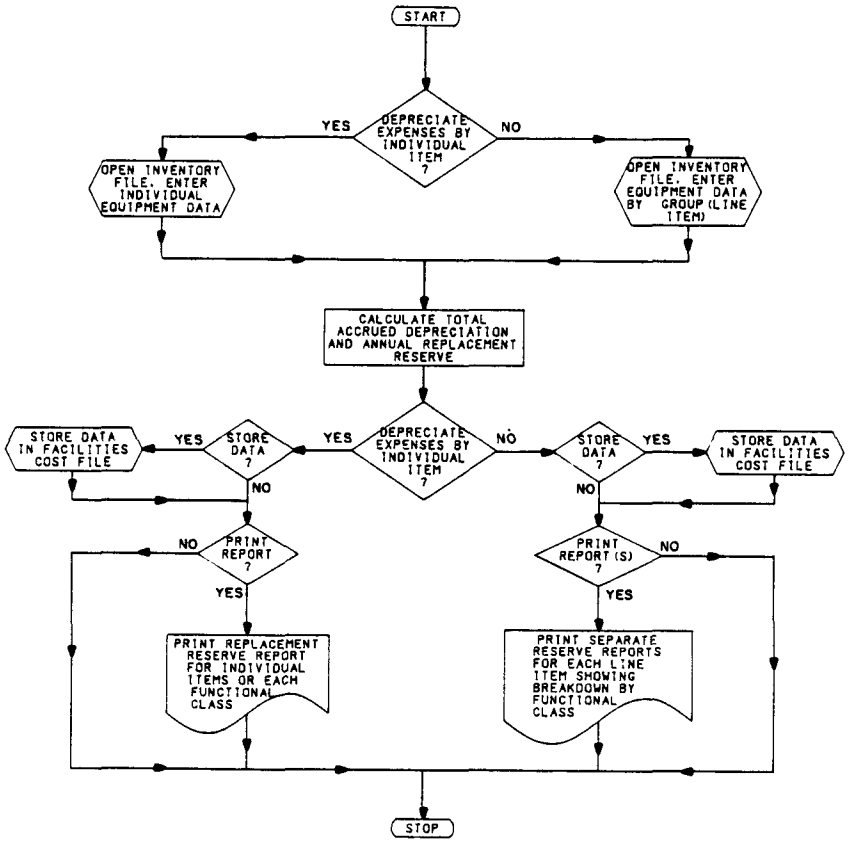

LEGEND

REFER TO FIGURE II-1

FIGURE IV-3

ANNUAL REPLACEMENT RESERVE PROGRAM P-7

PART THREE

FINANCIAL PLANNING

V. REVENUE GENERATION

A. Overview

The financial management system as described in this manual is intended to assist POTW's in becoming self-sufficient. Self-sufficiency is obtained when system costs are totally recovered through a revenue generation system without the aid of institutional subsidies. In addition to recovering current costs, revenues should be generated so that the system can operate on a continuing basis. The Federal Water Pollution Control Act addresses revenue generation by stating that:

> "...integrated facilities shall be designed and operated to produce revenues in excess of capital and operation and maintenance costs and such revenues shall be used by the designated regional management agency to aid in financing other environmental improvement programs."

Integrated facilities, as used here, refer to those facilities that result from integrating sewage treatment and recycling facilities "with facilities to treat, dispose of, or utilize other industrial and municipal wastes, including but not limited to solid waste and waste heat and thermal discharges."

The EPA Construction Grants Regulations addresses revenue generation by stating that:

> "Each user charge system must include an adequate financial management system that will accurately account for revenues generated by the system and expenditures for operation and maintenance (including replacement) of the treatment system."

Therefore, user charges are required to be designed to recover only those costs incurred in operating the system (operation, maintenance, and replacement costs). But, as implied in the Act, a financial management system that is to

assist a POTW to be self-supporting and to operate on a continuing basis must also account for debt service requirements and reserves for extensions/improvements in the sewer service charge system. Subsequently, the sewer service charge would consist of two components, a user charge to recover operating costs and an "assets" charge to recover existing capital-related costs and those future capital expenditures required for continuous operations.

The principal concern in designing a user charge system, and subsequently the programs for the revenue generation element, is the establishment of a proportionate system of sewer use charges based on the proportion of flow volume and pollutant strength contributed by each user. It should be noted that the "assets" component required for capital costs is also assumed to be allocated based on sewer use in this manual though it is not required. In fact, this component could incorporate a volume discount and sliding scale. The following programs are designed to facilitate development and evaluation of current and proposed sewer service charges to ensure their adequacy and proportionality to cost. Each program can incorporate "policy" data, in the form of limits and setpoints, that are established through the legal, institutional, or administrative authority available to the POTW owner and operators.

Figure V-1 is the operations flowchart of the cost recovery element that illustrates the interaction between the three activities: revenue requirement analysis, service area analysis, and sewer service charge rate setting. Basically the operations of this element consist of the Service Charge Rate setting program, P-10, utilizing the cost of service data (generated by the Revenue Requirements program, P-8, and stored in the facilities cost file); the customer flow characteristics data (stored in the customer file); and the service area flow data (updated by the Service Area Analysis program, P-9, and stored in the service area file). Six (6) files are to be maintained:

1. Customer File;
2. Facilities Cost File;
3. Rate File;
4. Revenue File;

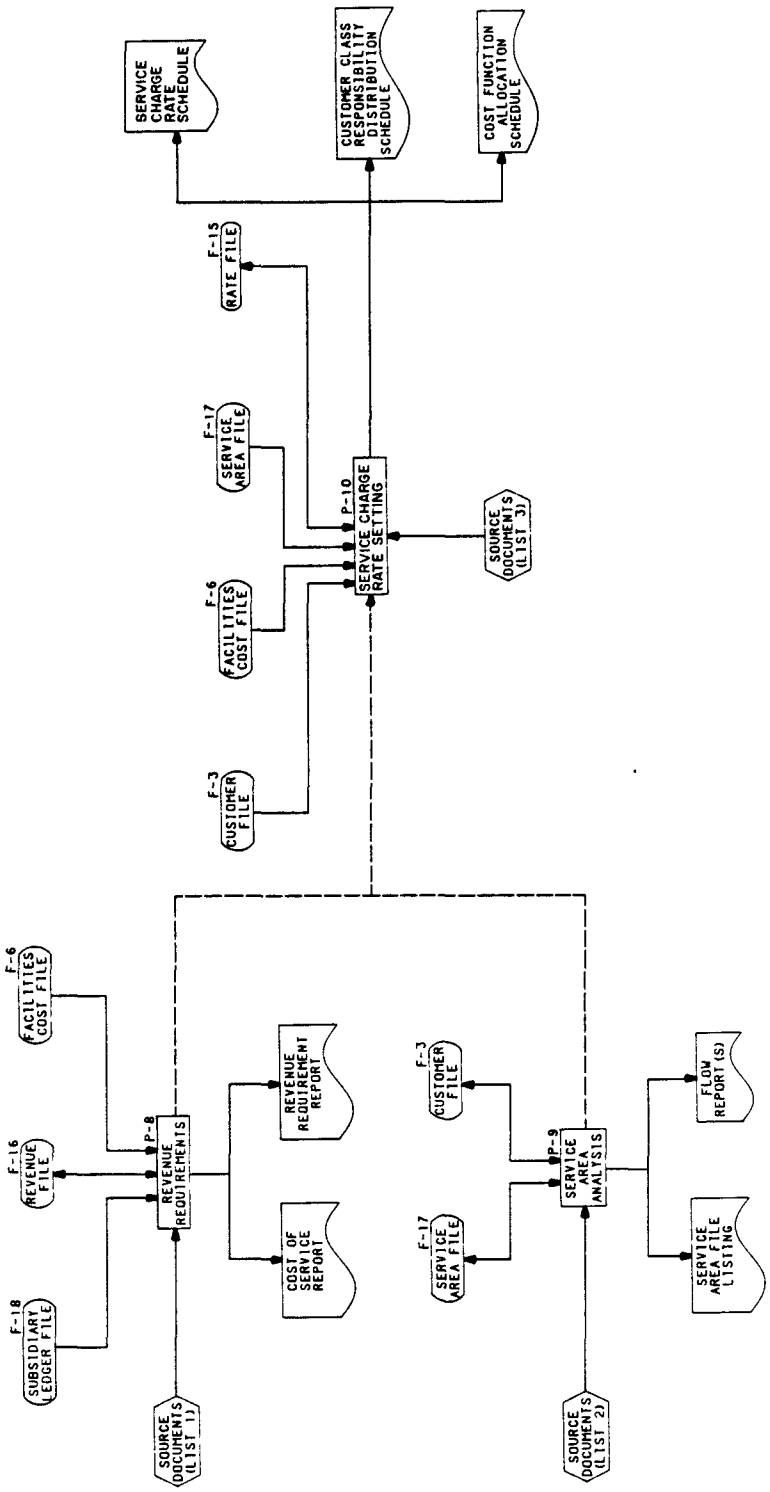

FIGURE V-1

REVENUE GENERATION OPERATIONS FLOWCHART

FIGURE V-1

REVENUE GENERATION OPERATIONS FLOWCHART (Cont'd)

List 1 - Source Documents, Revenue Requirements, P-8

- Pro-Forma Budget Plan Costs (OM&R)
- Pro-Forma Budget Plan Costs (Debt)
- Debt Service Record (Debt)
- Contribution Record (to other Departments)(OM&R)
- Contribution Record (to other Departments)(Debt)
- Rate for Available Rate of Return (Debt)
- OM&R Portion of Non-Use Revenue Data (Land Application Fees, Septage, Disposal Fees, Sewer Availability Charges, Connection Fees, etc.)
- Non-Use Revenue Data for Debt (Land Application Fees, Septage, Disposal Fees, Sewer Availability Charges, Connection Fees, etc.)

List 2 - Source Documents, Service Area Analysis, P-9

- Meter Records (includes location, type, service area code, meter readings, and reading dates)
- Industry Records
- Service Area Data (includes boundary coordinates)

List 3 - Source Documents, Sewer Service Charge Rate Setting, P-10

- Water Consumption Data
- Sewage Flow Data
- Pollutant Concentration Records
- Allocation Breakdown Factors for Cost of Service Items and Cost Function (OM&R)
- Allocation Breakdown Factors for Cost of Service Items and Cost Function (Debt)
- Customer Rates for OM&R
- Customer Rate for Debt Service

5. Service Area File; and

6. Subsidiary Ledger File.

The Rate File and the Revenue File are to maintain OM&R and Debt Service data separately.

The Revenue Requirements Analysis program, P-8, is to be used to determine the total amount of money needed annually by a utility and consists of three routines:

1. Determination of costs of service;

2. Determination of non-use revenue; and

3. Calculation of total revenue requirements; that is, revenues to be recovered through sewer service charges.

Each of these routines isolate OM&R from Debt Service for a federal grantee with an approved user charge system.

The Service Area Analysis program, P-9, was included as a part of this element because, in order to establish a "fair" sewer user rate structure, the cost recovery technique must incorporate certain field data pertaining to user characteristics. The information resulting from the collection and maintenance of this data can provide insight to user behavior based on historical trends, but more importantly it can be used to provide general information concerning the volume and strength of flow generated by basic user classes.

The Sewer Service Charge Rate Setting program, P-10, consists of four routines:

1. Revenue requirement (which involves accessing the output generated by program P-8);

2. Allocation of costs to cost functions;

3. Allocation of costs to customer classes; and

4. Development of rate schedules.

Each of these routines isolate OM&R elements from Debt Service for a federal grantee with an approved user charge system.

The final output from this element consists of rate schedules (pro forma or actual) to be reviewed, approved, and applied.

B. Activities

1. Revenue Requirements Analysis Program (P-8)

There are two recognized and accepted concepts for establishing a utility's annual revenue requirements; the "cash" basis (not to be confused with the cash basis of accounting) and the "utility" basis. The cash basis, the method described in this manual, is based on the theory that the required revenue is the amount necessary to make the cash outlays as they fall due. This method is particularly suitable to publicly-owned utilities organized to serve the public on a self-supporting basis but not operated for profit. The cash basis, as used for this program, incorporates costs for operation, maintenance, debt service, and equipment replacement and local capital, i.e. extensions and improvements into the estimation of the costs. The utility basis includes as the revenue requirement, operating (operation, maintenance, and equipment replacement expenses), capital depreciation, and a return on the rate base (the investment in facilities providing the service). Generally, the utility basis is only used by publicly owned utilities when they are subject to a regulatory agency requiring compatibility with regulated utility rate analysis practices.

To estimate the cost of service, the program as illustrated in Figure V-2 at the end of this chapter, addresses five (5) cost of service categories:

- Operation and maintenance costs;
- Debt service requirements;
- Replacement costs;
- Contribution to other department(s); and
- Reserves for extensions and improvements.

It should be noted that debt service and reserves for extensions and improvements are the local capital cost ("assets") component of total costs while the other three categories make up the operation, maintenance, and replacement cost ("user charge") component.

The program accumulates the costs into appropriate groups for the determination of user charge rates and "assets" charge rates. Not all categories require input; in fact, the last two categories may not be legally acceptable for some POTW setups. Input for the cost categories can be for the existing plant for which the accounting records (refer to Chapter III) are to be accessed or for a proposed budget in which cost estimates are directly entered by the user. Non-use revenue information can also be obtained from the accounting records or directly entered from budget cost estimates. Because there is such a variety of POTW non-use revenues (interest revenue, septage disposal fees, land application fees, connection fees, etc.), there are no set categories and cost data is to be entered directly for each user specified cost.

The final component of this program calculates the revenue requirement amounts to be recovered through the user charges and "assets" charges. The total non-use revenue is subtracted from the revenue requirement for "assets" charges to obtain an adjusted requirement amount. Both revenue requirement amount should reflect not only recent cost experience but also recognize anticipated future cost levels during the period for which rates are being established. The revenue requirement report generated by this program is to present the costs in prespecified categories as defined by the POTW's particular needs to determine a proportionate sewer service charge rate schedule which is developed using the Sewer Service Charge Rate Setting program, P-10.

2. Service Area Analysis Program (P-9)

In order to apportion costs of service to users, certain user characteristics must be compiled, examined, and evaluated. These characteristics assist in determining the customer's user class based on factors such as volume, frequency, and strength of wastewater flows generated. Also of importance is the consideration of type and degree of development in the service area which includes specification of total, sewered and sewerable areas. This program, as illustrated in Figure V-3 at the end of this chapter, is designed to accumulate this type of data and generate the appropriate reports. The data collected consists of five (5) categories:

- Flow meter data, which includes system meters on major lines such as interceptors and connectors. Individual water consumption meter data is collected as a part of customer billings (refer to Chapter III, Section B-3);

- Pumping station data for the water or sewer system;

- Overflow or bypass data for the sewer system;

- Industrial flow and strength data from individual sewer meters monitoring particular industries; and

- Service area boundary data, including data defining zoning and land use type(s).

All data records include coordinate data, based on some predetermined coordinate grid system. This data enables the program to superimpose the monitoring points and the service area boundaries on the grid system to determine the extent of the service area represented by each monitoring point. The POTW manager can also use this information to generate flow summary reports by specified service areas. Other reports generated by this program to assist the manager in determining customer characteristics include:

- Flow summary reports by customer user class - this report requires access to the customer file used in the customer billing process and requires water and sewer connections to be assigned coordinates;

- Meter flow report for system meters, pump stations, or overflow monitoring points; and

- Industrial waste report by industry type or for a selected industry.

All reports require the input of specified dates and access to the service area file that maintains the data.

3. Sewer Service Charge Rate Setting Program (P-10)

This program, as illustrated in Figure V-4 at the end of this chapter, incorporates the results of the revenue requirement analysis with cost allocation techniques followed by the generation of a schedule of rates. As stated in the overview section, this program consists of four (4) routines:

determination of revenue requirements; allocation of costs to cost functions; allocation of costs to user classes; and development of rate schedules. The first routine consists only of accessing the output generated by the Revenue Requirement Analysis program, P-8.

The second routine, allocation of costs to cost functions, is based on what is referred to as the "modified base-extra capacity" methodology for allocating costs. This methodology involves three cost function types as defined below:

- Base costs - costs which tend to vary according to the volume of wastewater collected and treated and costs associated with service to customers under average load conditions without the elements necessary to meet sewage flow variations and resulting peaks;
- Customer costs - costs associated with serving customers regardless of the amount of sewage generated or maximum flow such as meter reading and billing costs; and
- Extra-capacity (flow and strength) costs - costs associated with service requirements to meet extra-capacity flow and strength.

The routine determines extra-capacity factors for flow (average hour, average day, peak hour and peak day) and strength (for selected pollutant parameters). It is recognized that the determination and updating of these extra-capacity factors for flow can be complex and therefore of questionable use to a small POTW lacking the staff expertise or the flow monitoring capability required. Figure V-4 illustrates that these factors can therefore be directly entered, instead of calculated, and therefore be rough estimates based on experience and more general flow data. Using these factors, when applicable, and user-defined allocation factors which specify the distribution of a particular cost of a service item to the relevant cost functions, the Cost Function Allocation Schedule is generated. This schedule tabulates each service item's total cost allocation to the cost functions: base, customer, and extra capacity (maximum day, maximum hour and per pollutant type). It should be noted that Section 204(b)(2)(B) of the Clean Water Act requires cost functions to be defined in

terms of volume, strength, and flow rate characteristics. The "modified base-extra capacity" methodology proposed here satisfies this requirement in that volume is addressed in terms of the base costs while strength and flow rate characteristics are addressed in terms of extra-capacity costs. Customer costs, as defined here, were separated from the volume cost function in that they are costs unaffected by a change in volume of sewage generated by a customer from one billing period to the next.

The third routine, allocation of service costs to user classes, utilizes the same user classes (such as residential, commercial, industrial, institutional, and governmental) used in the customer billing process and defined by the Service Area Analysis program, P-9. These classes are selected primarily on the basis of their activity (such as domicile, business, manufacturing, etc.) which can be defined using metered water flow, metered sewage flow, size of water connection, or number of water fixtures along with general customer data received from the connection application form. This routine uses the field data in the service area file and the customer file to quantify the customer characteristics and determine the allocation factors for each cost function. These factors include annual flow (total, average rate, and percent of total), extra capacity flow and strength (percentage factor, rate, and percent of total), and equivalent meter/billing factors. For each class, the factors used to provide a measure of customer class responsibility include annual sewage flow; maximum-flow level characteristics (flow and strength loadings); and number of customers per meter size, billing cycle, and bills rendered. From these factors the Customer User Class Responsibility Distribution Schedule is produced. This schedule tabulates each customer class' total cost responsibility and the breakdown (percent and dollars) according to cost function type (base, customer, extra-capacity).

It is appropriate at this time to address charges for operation and maintenance for extraneous flows which are not directly attributable to users. According to the EPA Construction Grants regulations these extra costs can be distributed among users based on their actual use as are base costs and customer costs; or they can be treated as extra-capacity costs and distributed based on flow volume of the users, land area of the users, number of hook-ups or discharges; or, in the case of a user charge system based on ad valorem

taxes, on property valuation of the users. Also to be provided in the revenue generation system is a means of recovering the costs necessary to carry out the procedures of any approved municiple pretreatment program. According to federal regulations these costs can be recovered through the users (extra-capacity costs) or paid in whole or in part by other available available sources of funds.

The last routine, development of rate schedules, involves determining the sewer service charge rate per user class and/or per specified volume of flow (such as per 1000 gallons). The program incorporates a minimum bill or fixed charge (per meter size or based on average flow of minimum usage customer) if specified. The final output of this program is the Service Charge Rate Schedule, which is a tabulation of the user charge rates and the "assets" charge rates. These rates can be per customer type for the service area as a whole or per subareas within a service area, depending on the utility's particular needs.

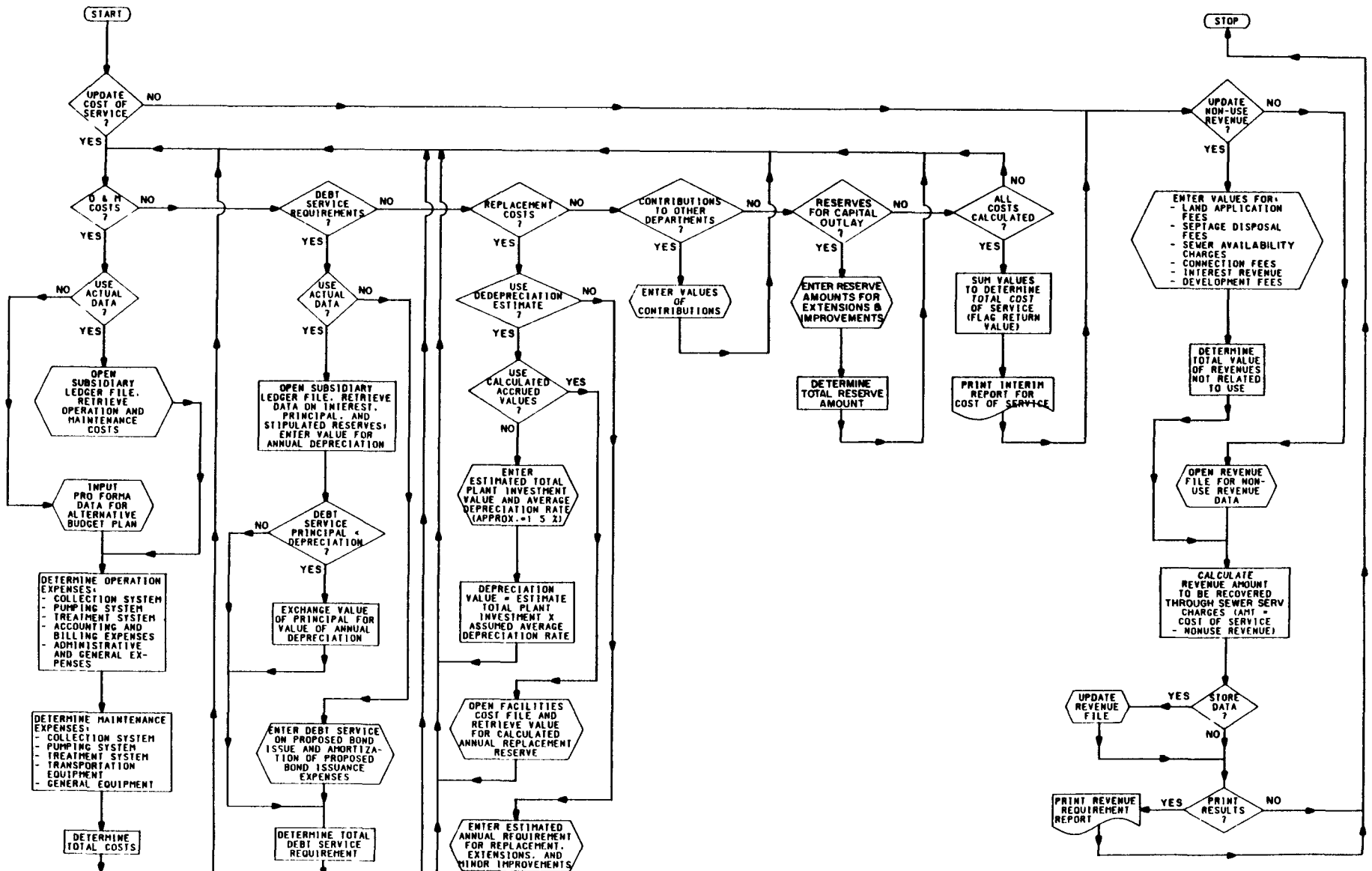

LEGEND
REFER TO FIGURE II-1

FIGURE V-2
REVENUE REQUIREMENTS
PROGRAM P-8

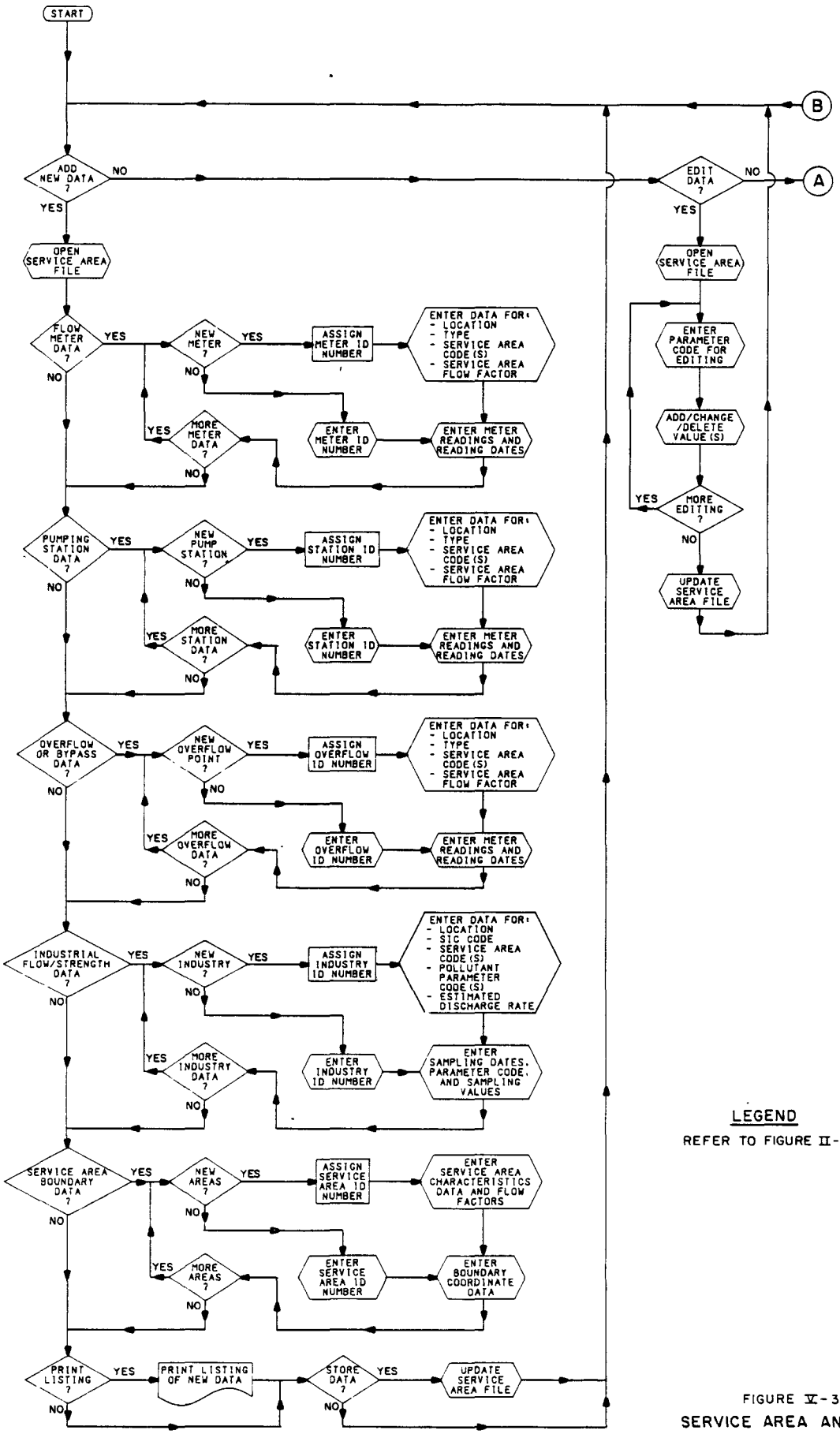

LEGEND

REFER TO FIGURE II-1

FIGURE V-3

SERVICE AREA ANALYSIS PROGRAM P-9 1 of 2

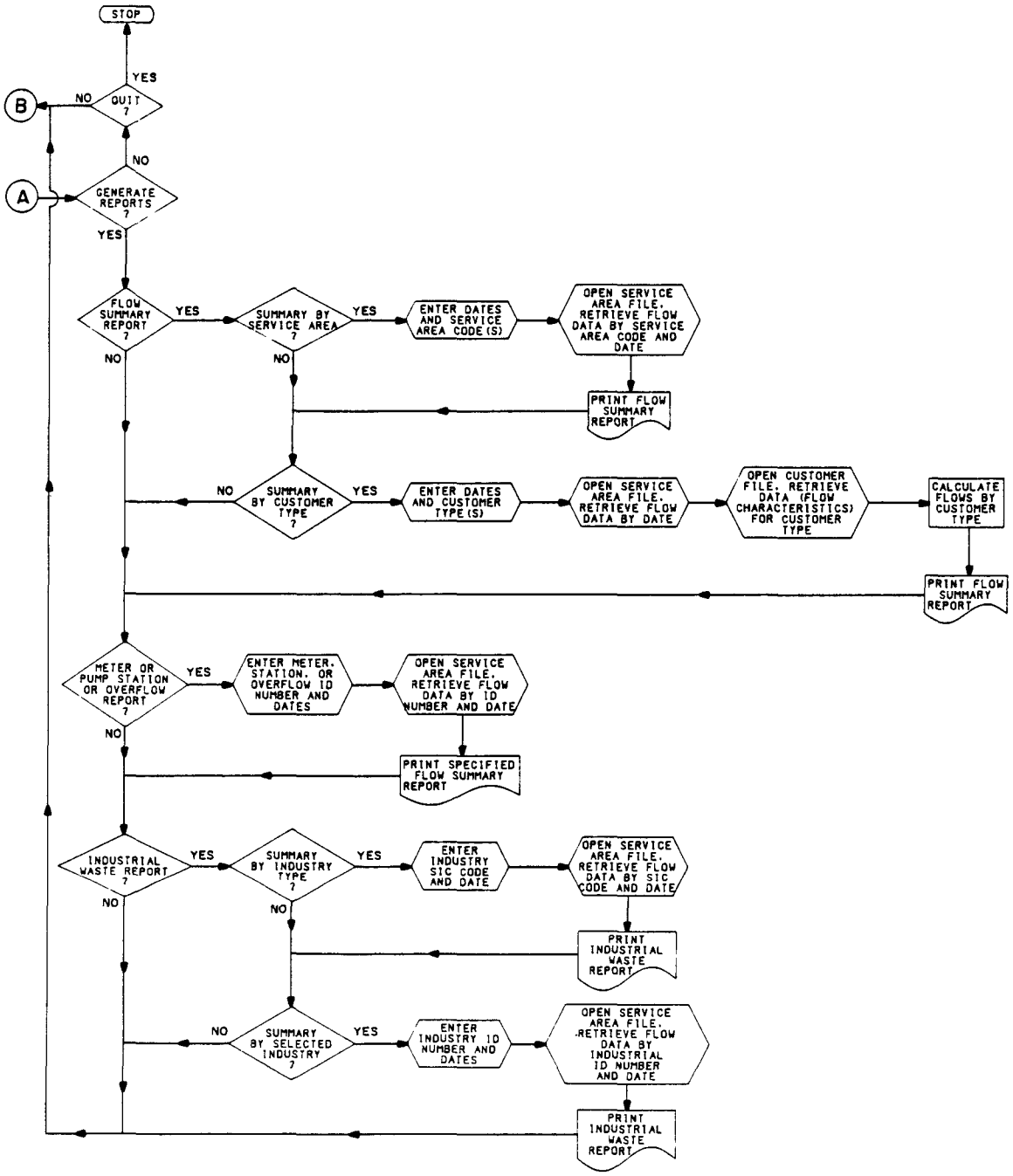

LEGEND

REFER TO FIGURE II-1

FIGURE V-3

SERVICE AREA ANALYSIS PROGRAM P-9 2 of 2

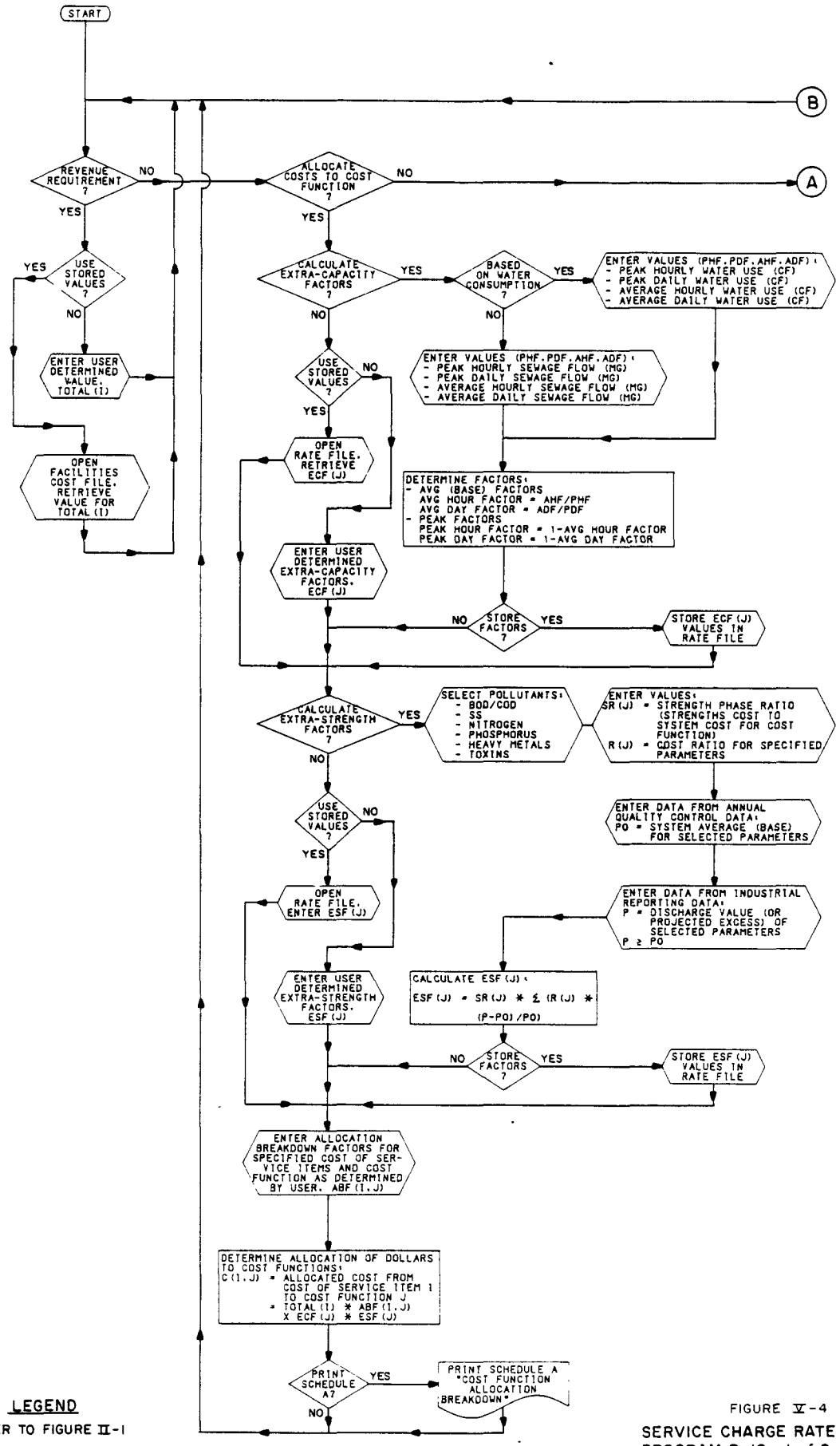

LEGEND

REFER TO FIGURE II-1

FIGURE V-4

SERVICE CHARGE RATE SETTING PROGRAM P-10 1 of 2

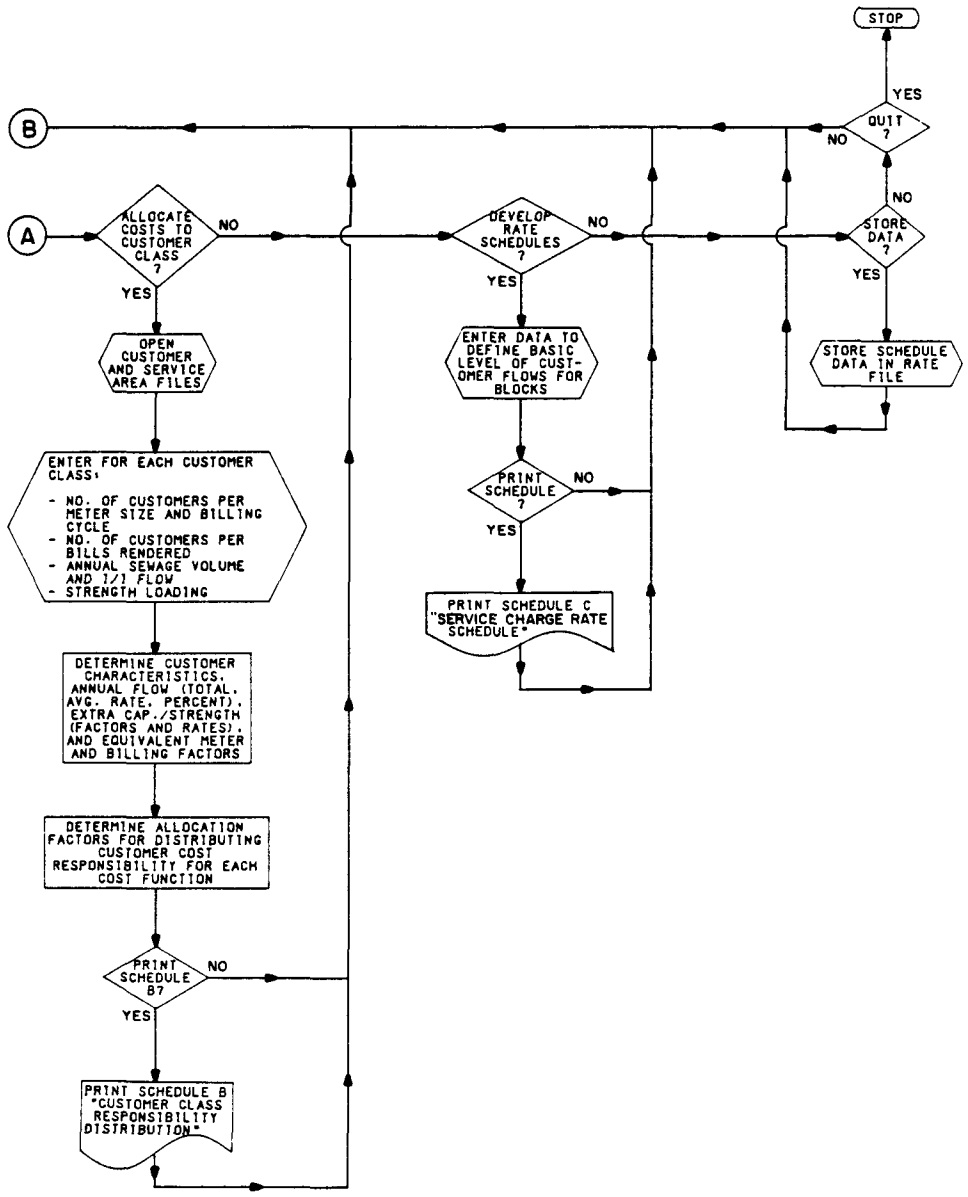

LEGEND

REFER TO FIGURE II-1

FIGURE V-4

SERVICE CHARGE RATE SETTING PROGRAM P-10 2 of 2

VI. BUDGETING

A. Overview

Budgeting is the process of quantifying the overall activity plan of the POTW for a specified period of time, usually on a yearly basis. An important objective of this process is to fit together the separate plans made for various segments of the utility to assure that these plans harmonize with one another and that the aggregate effect of all of them on the whole utility is satisfactory. The resulting budget plan provides the basis for a control mechanism that is used for the periodic comparison between planned objectives and actual performance.

The annual budgeting process, as adressed in this manual, includes the development of an operating budget and a budget to provide for debt service requirements and local capital cost requirements incurred as a result of extensions and improvements. Capital budgets which commonly refer to budgets providing for planned major construction in the form of capital outlays plans and capital improvement programs, are not a part of this manual. The distinction between annual budgets for debt service and local capital cost requirements and capital budgets is that the former's budgeted expenditures can be recovered by the revenues of the "asset" component of the sewer service charge (refer to Chapter V) whereas the latter's budgeted expenditures usually involve the use of various capital financing techniques including general obligation bonds, revenue bonds, and loans. This distinction is made because a capital budget, which is usually a part of a community's (or POTW's) master plan effort undertaken every 5 to 20 years, involves capital cost requirements much greater than those needed for extensions and debt service and therefore can not be met through the service charge revenue generation technique. A discussion of the various "creative" financing techniques available for major capital outlays and the long-term capital budgeting process is not within the scope of this manual.

The computer-based budgeting process requires extensive user interface due to the many non-quantitative factors involved in allocating funds to various

activities and account types in budget preparation. Figure VI-1 is the operations flowchart for the budgeting element. Basically programs P-11, P-13, and P-15 are to provide the utility manager with financial information for "control" purposes. Knowing how actual expenses compare with budgeted expenditures of the past and current fiscal years and what cash surpluses or deficits are expected, the manager can make decisions or take actions to maintain the "financial health" of the POTW utility. Program P-12, along with P-11 and P-13, provide the utility manager with information that will assist him in making the decisions necessary for budget implementation. These programs provide documentation to support the manager's proposed budget during the review process.

The primary data base of this element is the budget file which stores all data relating to the operating budget including "policy" data, current and historical approved budget amounts and work schedules, current and historical revenue/expenditure projections and cash flow forecasts, proposed alternative plans (temporary storage only during budget planning period), and budget approval data (dates of review/approval and comments). Access to this particular file is to be restricted to authorized personnel due to the nature of the data maintained, particularly the budget "policy" and approval data, including budget period dates; review process dates, agency names, and sequence; organization classifications; budget minimums; flexible budget ranges; standard budget transfer procedure; water conservation program information; capital improvement implementation schedule; and revenue use constraint data.

Other files required include:

- Customer File (F-3)
- Debt History File (F-4)
- General Ledger File (F-8)
- Inventory File (F-9)
- Journal Entry File (F-11)
- Maintenance File (F-12)

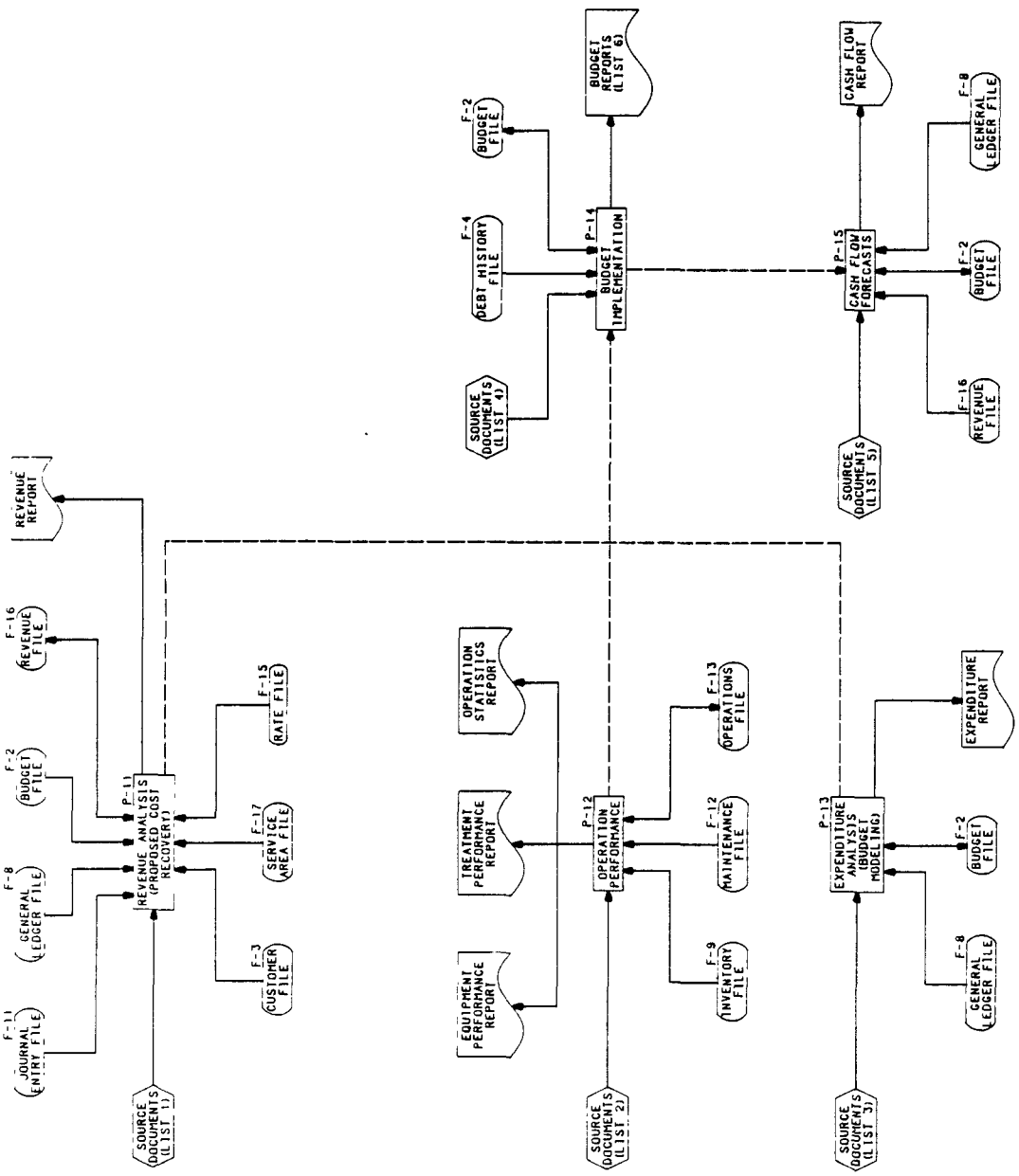

FIGURE VI-1

BUDGETING
OPERATIONS FLOWCHART

FIGURE VI-1

BUDGETING OPERATIONS FLOWCHART (Cont'd.)

List 1 - Source Documents, Revenues Analysis, P-11

- Departmental Revenue Worksheet
- Predicted Loss Amount (based on previous customer billings records)

List 2 - Source Documents, Operation Performance, P-12

- Work Order or Work Order Summary
- Maintenance Log (Maintenance Activity Report)
- Maintenance Schedule (PM Work Record and Report of Trouble)
- Rain Gage Records
- Daily Laboratory Record
- Daily Activity/Process Operation Logs
- NPDES Discharge Monitoring Report
- Monthly Plant Performance Report
- Energy Data Form
- Daily Utility Operating Report

List 3 - Source Documents, Expenditure Analysis, P-13

- Operating Expense Worksheet

List 4 - Source Documents, Budget Implementation, P-14

- Regulations (concerning Budget Standards and Revenue Use)
- Organization Chart
- Water Conservation Program Report
- Capital Improvement Program Report
- Debt Service Records (for Bond Sales, Requirements, and Sources of Funds)
- Budget Activity Summary Worksheet

- Operations File (F-13)
- Rate File (F-15)
- Revenue File (F-16)
- Service Area (F-17)

B. Activities

1. Revenue Analysis (P-11)

Budget preparation requires an accurate estimation of collectible revenue. Reliable statistics on the past operations of a utility can be used to document changes that took place, such as changes in revenue. These changes can be attributed to service area growth patterns and variations in land use or customer characteristics, as well as changes in the utility's rate structure. The revenue analysis program, as illustrated in Figure VI-2 at the end of this chapter, is designed to estimate a proposed revenue generation amount based on the current or projected sewer service rate charges, historical records of uncollected billings and other revenues, and on the accuracy of past revenue projections. The design consists of five (5) major components:

- Determination of base revenue generation amount - uses the existing or a proposed rate schedule stored in the rate file and projected flows (per capita and industrial) stored in the service area file to determine the potential amount of revenue that can be generated through sewer service charges.

- Determination of predicted loss amount - represents the uncollectable utility revenues, based on the historical bad debt factor, percentage of bad debt to the amounts receivable (cash receipts or operating revenue). This factor is based on data retrieved from the customer file (delinquency history), and accounting records (amounts receivable). The program also provides the option of adjusting the amount for projected changes in user income as stored in the service area file.

- Determination of total revenue generation amount - equals base revenue amount minus predicted loss amounts referred to above.

- Modification of total revenue generation amount - based on percentage difference (over or under) between actual and estimated revenues for previous budget periods. This incorporates the non-user charge revenue sources such as penalty fines, connection fees, etc. which were not accounted for in the predicted loss amount. This function requires accessing historical records for actual and projected revenue amounts of previous budget periods.

- Report generation - involves printing the Statement of Actual and Estimated Revenues.

2. Operations Performance (P-12)

The budget control function should not only include the periodic comparison of actual expenditures incurred and actual revenues collected to budgeted and proposed amounts, respectively, but also the comparison of actual operations of equipment and plant treatment levels to projected performance levels. The operations performance program, as illustrated in Figure VI-3 at the end of this chapter, provides this capability so that utility managers can see the total operations picture. Staying within a budget but not obtaining the expected treatment efficiencies and equipment performance levels that are to accompany the budget reflects a problem which could be related to an ill-conceived operating budget or poor operation or maintenance procedures.

The program design has three (3) basic components, each relatively independent of the other:

- Evaluation of equipment performance - extension of a comprehensive preventive maintenance system by using the data stored in the inventory file including work order summaries, maintenance logs, and maintenance schedules to determine maintenance activity status and equipment malfunction rate. These functions result in the generation of workload/accomplished summaries and the history of repairs report.

- Evaluation of plant performance - includes printing EPA NPDES reports, along with notation of non-compliance; daily operations reports; and summary reports (weekly, monthly, annually) to provide the utility staff with comprehensive reports on operation status and treatment performance.

- Trend/statistical analysis - includes generation of trend plots for specified pollutant and flow parameters, with superimposed NPDES standards when applicable; calculation of treatment removal efficiencies and loading rates; calculation of general statistics for specified parameters; and determination of parameter relationships using linear regression analyses. This last function could include correlating the usage level of chemicals and energy to pollutant loadings.

3. Budget Comparison (P-13)

As stated previously in this chapter, budget preparation can provide an effective management control mechanism for expenditures. This involves comparing actual operation and maintenance expenditures, debt service payments, and local capital expenditures with budgeted expenses on a routine basis. Basically, this program, as illustrated in Figures VI-4 at the end of this chapter, is designed to generate a budget report used for budget/expenditure comparison. The report format should be user-specified with the following options:

- Time period of current expenditures and budget expenses (specified fiscal year or month);
- Time period(s) of past expenditures and budget expenses for comparison;
- Cost/Fund breakdown (line item/department/activity); and
- Expenditures or expenditures and revenues.

The report can include (depending on the selection of options) totals, excess/deficiency amounts, fund balances, variances of actual to budgeted, and flags for noting "problems" needing possible budget transfers.

4. Budget Implementation (P-14)

This program, as illustrated in Figure VI-5 at the end of this chapter, is the link between the budget planning processes that are addressed in Chapter VII (Planning) and the periodic budgeting functions that include the control techniques of comparing projected revenues, budgeted expenditures, and proposed operation performance levels to actual conditions.

- Update "policy" data - enter program control data including budget period (length and dates), review and approval procedure (names of agencies, established dates, and review sequence), organization classifications, account classifications used for budget reports, budget minimums, flexible budget ranges, standard budget transfer procedure, water

conservation program (text and statistics to accompany budget report), capital improvement program (dates for implementation schedules affecting current operating budget and existing debt service requirements), and federal regulations on revenue use restrictions and limitations (to flag appropriate revenue and expenditure funds).

- Update proposed expenditures - enter proposed expenditure data by character type (including dollar amount, personnel requirements, and man-years) and by activity classification (dollar amount only). Internal check is made to compare total dollars for expenditures by character type and total dollars for activity classification. If totals do not equal, a "flag" is used to alert user. This process is continued for all departments and for all levels of service (for flexible budgets only). Preliminary budget schedules are then produced for review.

- Update proposed debt service - projects long-term payable indebtedness and maturities by fiscal year, then prints reports on debt service requirements and outstanding indebtedness.

- Perform budget analysis - retrieves data from revenue file and allocates, when applicable, revenues to appropriate departments and/or expenditure categories based on user specifications and revenue use controls (refer to first function).

- Generate budget report (schedules) - prints reports as specified including summary of operating expenditures; statement of assessable bases and tax rates; summary of man-years requirements; summary of personnel requirements; allocation of operating budget to major categories of expenses; breakdown of operating expenditures by fund, function, and department; summaries of general fund operating revenues and operating revenues by source; and summary of local capital expenditures. This function is used when management has selected a particular budget plan from those proposed during the planning process (refer to Chapter VII). These reports are then used as the documents for presenting the budget to the public or proper authorities and agencies for approval.

- Budget review/approval update - updates record maintaining budget review and approval data including agency name, date(s) of review or approval, and comments.

5. Cash Flow Forecasts (P-15)

Utility managers must estimate the amount of cash required to:

- Conduct normal utility operating activities;
- Meet contingencies; and
- Maintain minimum balances required to compensate for bank services rendered or provide lines of credit in order to determine the appropriate amount of cash to be retained "on hand" or in an account.

Cash held on hand or in checking accounts are nonearning assets. When this cash balance is excessive, utility management is witholding resources from possible profitable investment or is paying interest on borrowed money that is not needed to finance utility operations.

Because of the need to maintain a sufficient but not excessive cash balance, a sound financial management system provides for forecasting cash receipts and disbursements. This activity is concerned with providing cash flow forecasts to:

- Anticipate future cash deficiencies;
- Augment the cash balance by short-term borrowing or by issuing long-term securities;
- Formulate debt repayment plans; and
- Plan the investment of excessive cash balances.

The design of the cash flow forecast program, as illustrated in Figure VI-6 at the end of this chapter, consists of three (3) components:

- Add new forecast data;
- Edit existing forecast data; and
- Generate forecast report.

A particular income or disbursement forecast is stored in the budget file by specified timeframe (preferably equal to the budget period) and department. The projected income is retrieved from the revenue file for a specified category and timeframe increment (i.e. month) and multiplied by the "historical ratio" of cash receipts to revenues which is automatically updated at the end of each budget period. This adjustment accounts for differences between revenue estimates determined using the accrual basis and the cash basis. The projected expenditure is retrieved from the budget file and adjusted for differences between expense estimates determined using the accrual basis and cash basis by multiplying the "historical ratio" of expenses to expenditures. The editing function of this program allows for user-adjustment of program-generated forecasts (including other fund sources and uses not currently stored in file) and therefore reflects the subjective judgement of the utility manager and staff on future conditions.

The report produced by this program is for a user-specified timeframe and includes the option of displaying actual general ledger data for the current time period. After each source and use (including payment of interest and principal amounts on existing debt) are estimated for each increment of the specified timeframe, the resulting net cash balance will indicate the need for, and timing of, additional financing (or investment). The cash forecast then can be adjusted, via the edit function, for the effect of the additional financing (or investment).

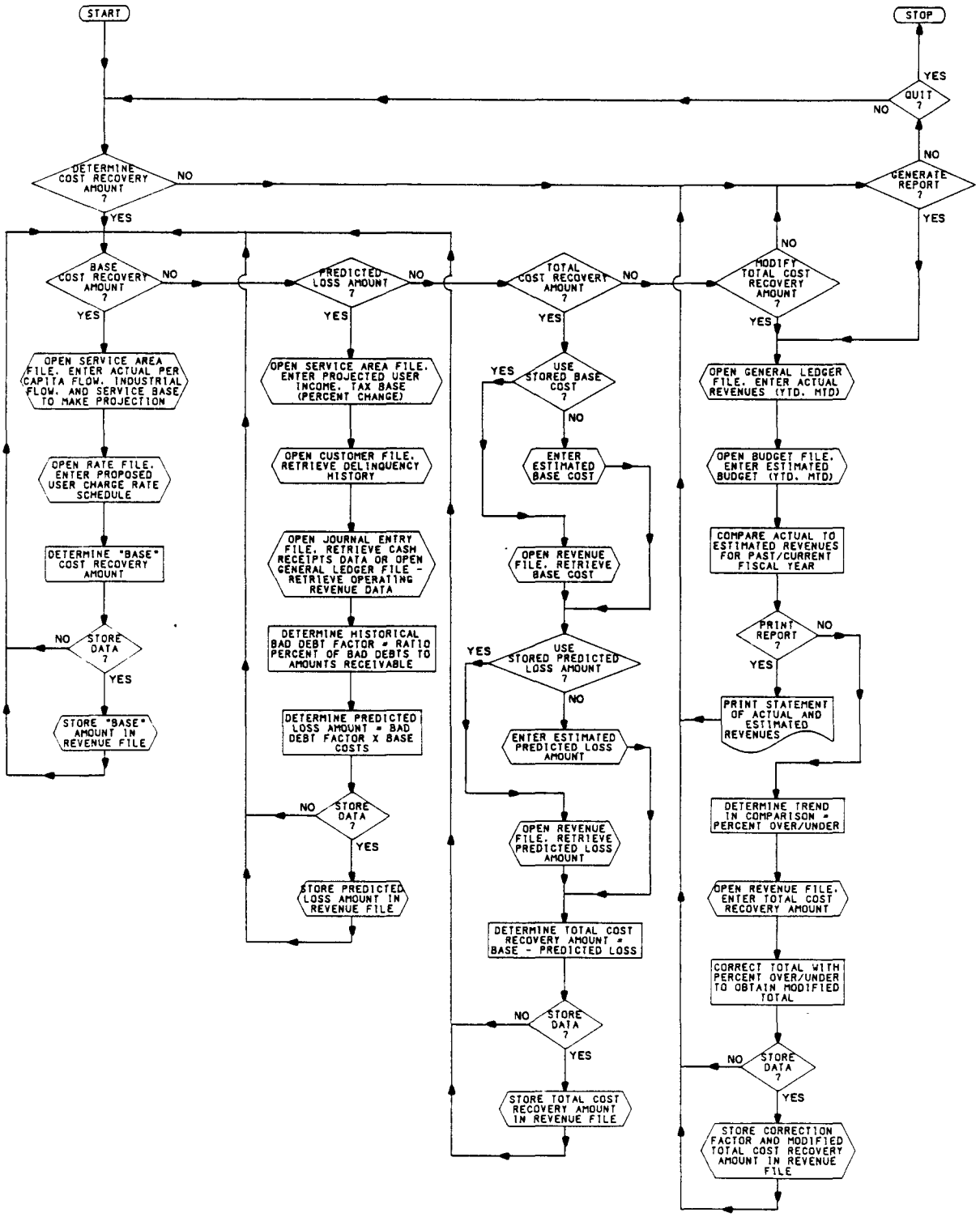

LEGEND

REFER TO FIGURE II-1

FIGURE VI-2

REVENUE ANALYSIS PROGRAM P-II

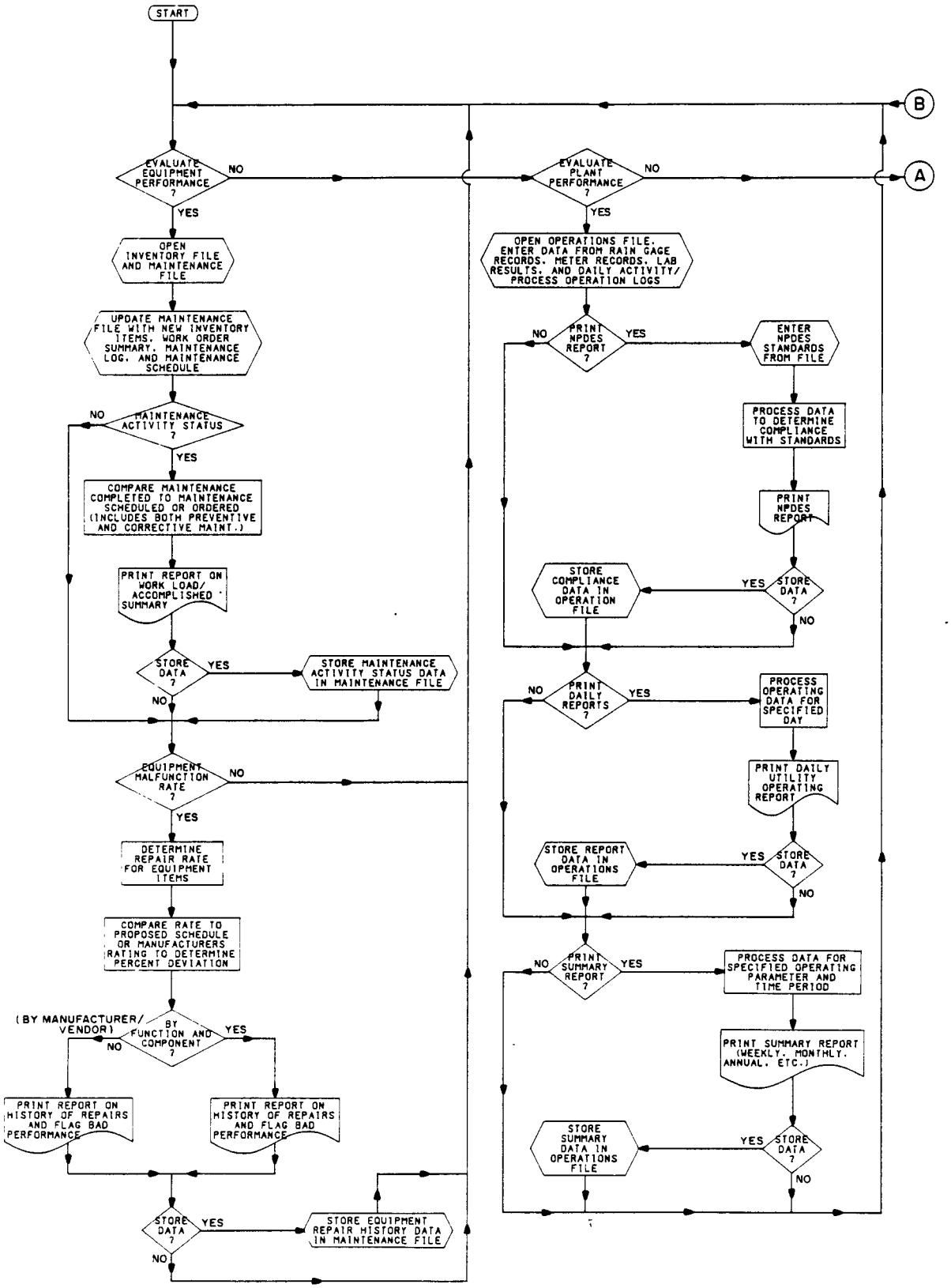

LEGEND

REFER TO FIGURE II-1

FIGURE VI-3

OPERATIONS PERFORMANCE PROGRAM P-12 1 of 2

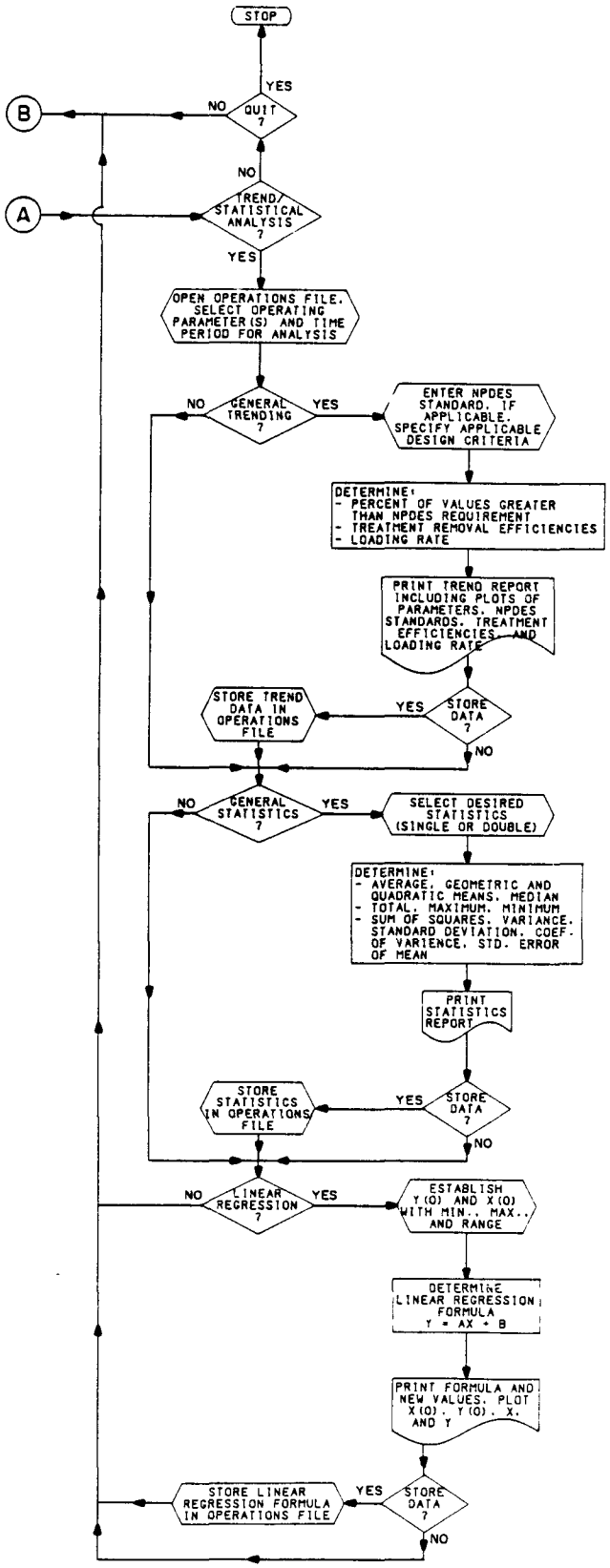

LEGEND

REFER TO FIGURE II-1

FIGURE VI-3

OPERATIONS PERFORMANCE PROGRAM P-12 2 of 2

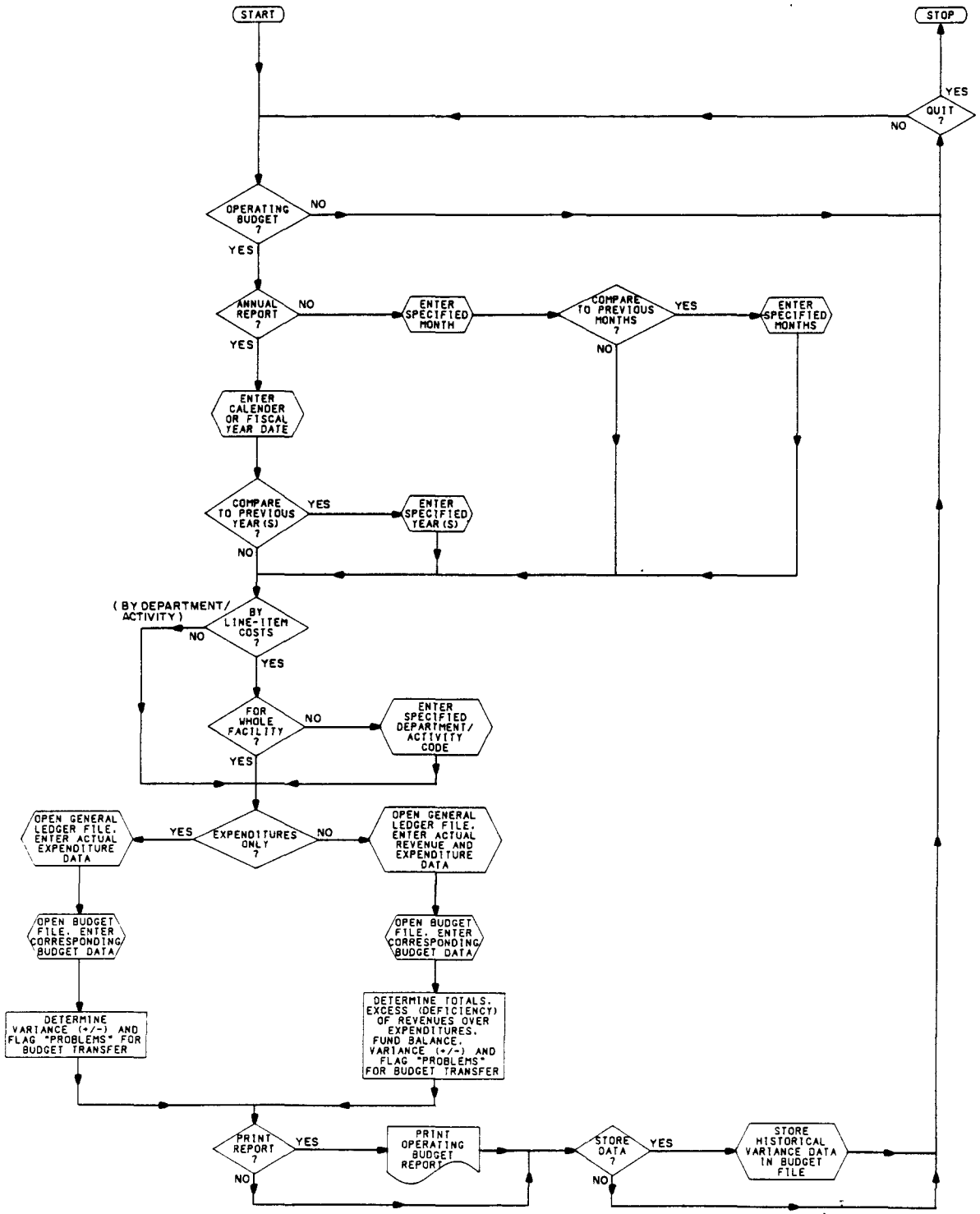

LEGEND

REFER TO FIGURE II-1

FIGURE VI-4

EXPENDITURE ANALYSIS PROGRAM P-13

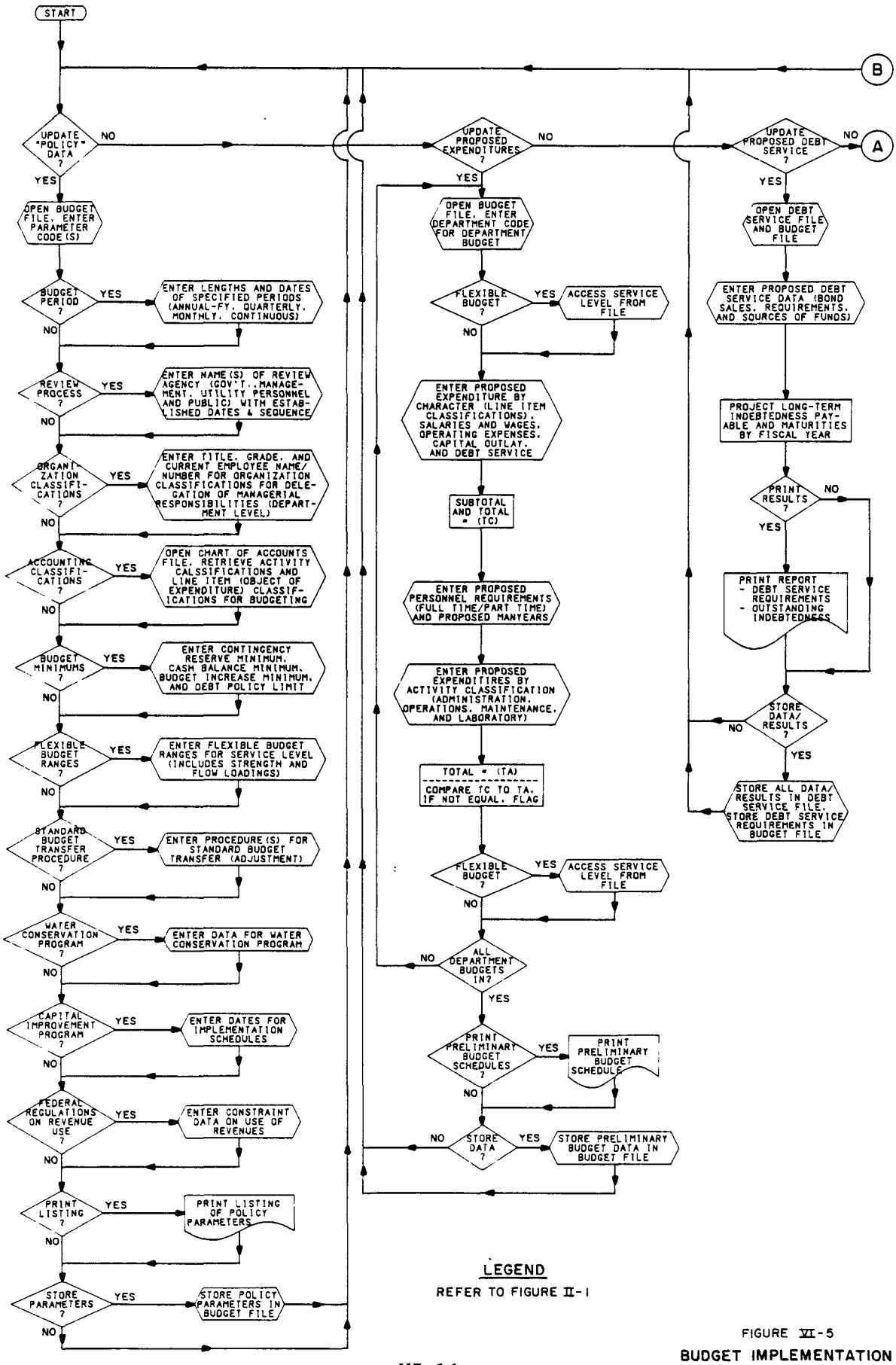

LEGEND

REFER TO FIGURE II-1

FIGURE VI-5

BUDGET IMPLEMENTATION PROGRAM P-14 1 of 2

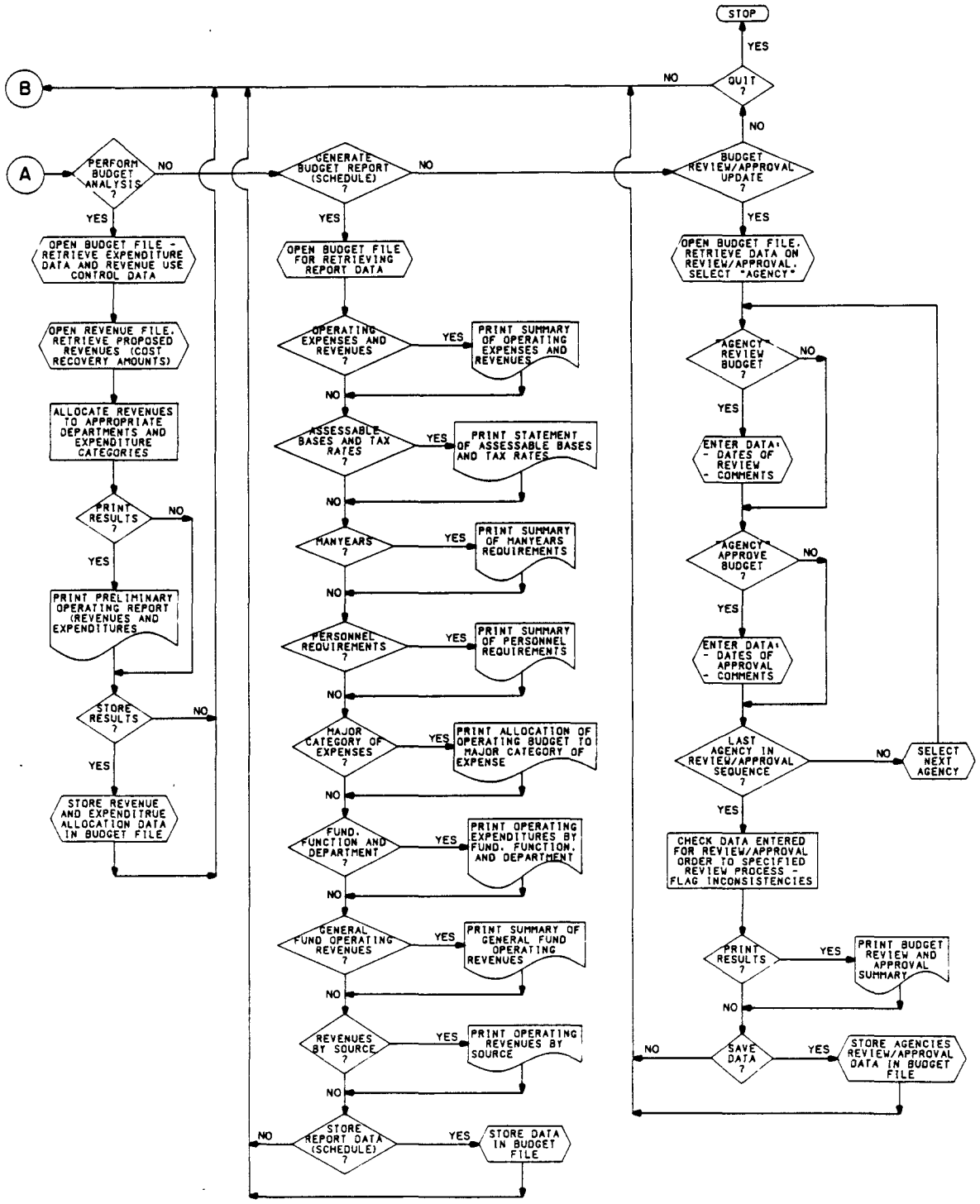

LEGEND

REFER TO FIGURE II-1

FIGURE VI-5

BUDGET IMPLEMENTATION PROGRAM P-14 2 of 2

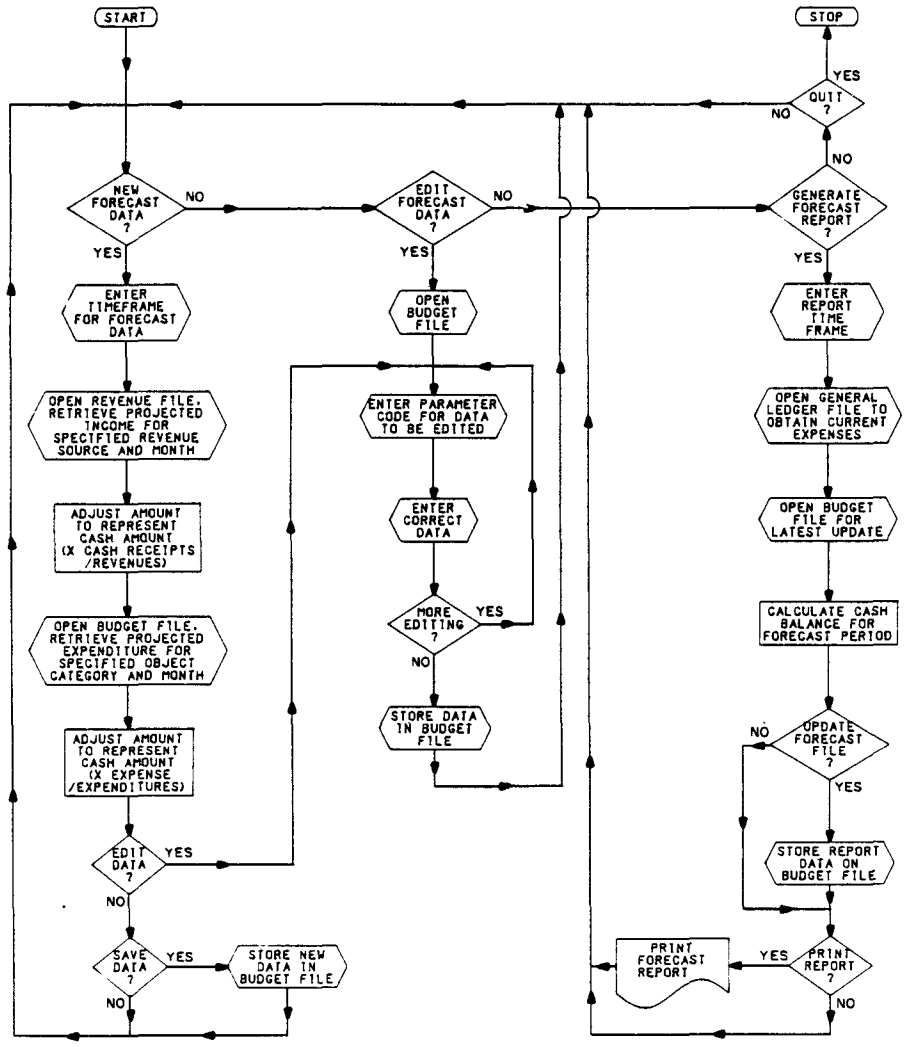

LEGEND

REFER TO FIGURE II-1

FIGURE VI-6

CASH FLOW FORECASTS PROGRAM P-15

VII. PLANNING

A. Overview

Prior to and during the budget preparation process, each department (or sub-department) in a utility prepares department plans with alternative plans of action. Generally each alternative plan requires the use of a different combination of manpower and labor skills, material resources, and plant facilities. To harmonize the various department plans with one another to produce a preferred utility budget plan, the operations conditions representing the alternative plans of action for each department are to be combined and evaluated. The planning element of the financial management system involves evaluating the plans based on the financial capability of the revenue source (the service area) and on the operations performance of the physical activities involved. It should be noted that this evaluation process assumes that all proposed plans will ensure compliance with governmental regulations concerning treatment performance and water quality standards. The operations flowchart for the planning element is presented in Figure VII-1.

The first activity of the planning element involves determining population and income changes based on statistical analysis of population data stored in the service area file. The resulting information is then used by the two evaluation activities of this element: service area financial ability analysis and performance analysis as an indicator of the economic base to estimate household financial ability and as indicator of development to estimate residential flow service levels.

The service area financial ability analysis activity of the planning element is intended to assist municipal officials in analyzing the financial impact of a proposed budget plan on the community as a whole and on individual users, including households and nonresidential users. This impact can include both the initial capital investment of a major construction project and the cost of operations and maintenance (including replacement). As stated in Chapters II and VI, the proposed financial management system is primarily concerned with short-term budgeting (annual operating budgets, debt service

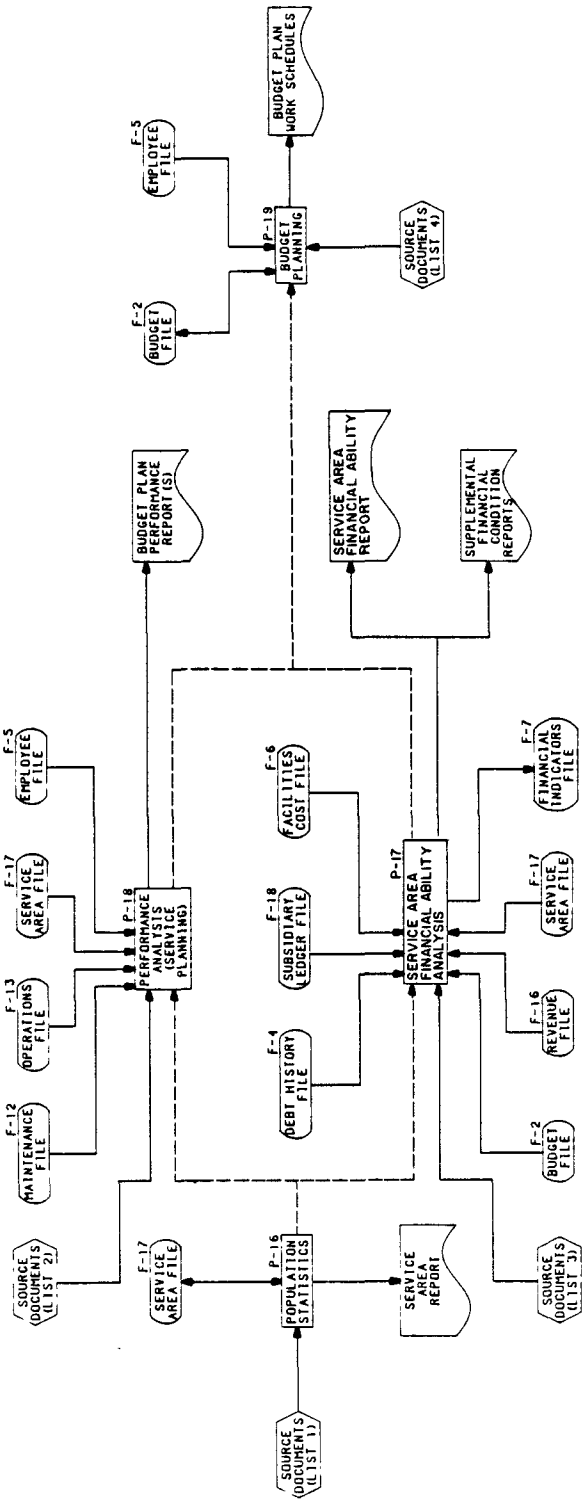

FIGURE VII-1
PLANNING OPERATIONS FLOWCHART

FIGURE VII-1

PLANNING OPERATIONS FLOWCHART (Cont'd.)

List 1 - Source Documents, Population Statistics, P-16

- Population Record (from U. S. Census Bureau or State Data Center)
- Income Records (from U. S. Census Bureau or State Data Center)

List 2 - Source Documents, Performance Analysis, P-18

- User - determined Benefit Value for Activity "as is"
- Units of Work (Gallons of Flow Treated, Gallons of Sludge Generated, etc.)
- Proposed Departmental Budget Plan Expenditures
- Plant Treatment Operation Records
- Employee Records
- Projected Flow Values

List 3 - Source Documents, Service Area Financial Ability Analysis, P-17

- Construction Costs records
- Operation and Maintenance Cost Records
- Property Tax Records
- Property Assessment Records

List 4 - Budget Planning, P-19

- Employee Records
- Budget Report

requirements, and local capital costs) and planning for the expenses of an existing treatment facility, rather than long-term capital investment planning. It is recognized, though, that the service area financial ability analyses and, subsequently, the planning activities required for annual operating and long-term capital budget preparation are not completely separable and that both types of budgets are required for a complete financial system. In view of this, the service area financial ability element will encompass some components involving capital outlay plans and capital improvement programs.

The performance analysis activity evaluates the present operations performance for existing facility conditions and the projected operations performance for proposed plans of action. Four categories of evaluation are addressed: efficiency, effectiveness, workload, and wastewater loading.

The budget implementation program, P-14, of the budgeting element provides a routine to generate a "preliminary operating report" which lists the proposed revenues allocated to each department and/or expenditure category. This program can be used to define the financial requirements of the alternative budget plans for the evaluation proposed for the planning element. The final activity of the planning element then generates a "work schedule summary" for the preferred budget plan. This document, along with the "preliminary operating report" for that particular budget plan, provides input to the budget implementation program, P-14, for generating the final budget reports (schedules) to be used in the budget review process.

B. Activity

1. Population Statistics (P-16)

This program, as illustrated in Figure VII-2 at the end of this chapter, maintains income and population data for the service area, allocates population within the service area, and generates statistics. It consists of three (3) components:

- Population dissaggregation - dissaggregate population data by overlaying boundaries of the service area(s) and its subdivisions using residential zoning development density districts, sewer planning areas, etc. to generate allocation factors which are applied to actual or projected population figures.
- Development of median income - involves extrapolating either the median household income or the adjusted median family income to the full census block to allocate income to service areas.
- Statistical analysis - performs statistical tests on population and income data including frequency distributions, T-tests, correlations (using Pearson's R with significance levels), and multiple regression (for both time-series or cross sectional data).

The last component is used basically to assist utility managers in making population and income projections but can also be used to determine correlations of the total service area's population and income to various subareas or service categories. These correlations could generate ratios that would act as constraints in the dissaggregation process.

Regression analysis and correlations could also be made with population data and any one of (or combinations of) the following parameters:

- Number of utility hookups;
- School enrollment;
- Number of births;
- Number of deaths; and

- Number of net migrants.

The results of this program are used to indicate the change in both the economic base (income and population size) of residential users and the residential development (flow volume and type).

2. Service Area Financial Ability Analysis (P-17)

This program, as illustrated in Figures VII-3 at the end of this chapter, consists of the six (6) components described in the following sections.

a. Estimate facilities costs. This component includes:

- Entering construction costs - includes construction costs incurred during installation of equipment accessories and appurtences. The program adjusts costs to current dollars using EPA indices (Small City Conventional Treatment Index and Complete Urban Sewer System Index).

- Entering operation and maintenance costs - includes costs for labor, fuel and power, material and supplies, outside services, equipment, and miscellaneous items. The program adjusts costs to current dollars using EPA indices (O&M Plant Indices for Pump Stations and Sewers).

Costs for a number of proposed operating budget plans can be entered simultaneously for comparative evaluation. The resulting "Cost Summary Report" includes costs by system components and totals.

b. Estimate financing amounts. This component is intended to determine the amount to be borrowed, if any, by the grantee and to identify the methods of financing that amount. It can be used in determining the financing of the costs incurred for major capital construction projects, but in this case is used to address financing of annual costs resulting from plant operations and extensions and improvements needed for

continuous operation of the utility. The procedure was divided into five functions:

- o Determining amount to be borrowed - involves determining grantee share (by system component and total system), total construction-related costs, and total grantee contributions.
- o Determining annual debt service payment - involves various types of financing sources; general obligation bond, revenue bond, or loan.
- o Determining total estimated annual wastewater facilities costs.
- o Determining total funding for annual POTW's costs.
- o Generating Summary of Cost Totals for Budget Plan(s) which includes a "flag" for "non-selfsupporting" plans (total costs greater than total funding).

c. Estimate annual cost per household. This component includes:

- o Determining annual cost per household - calculated based on residential share of total estimated annual POTW charges (divided by number of households) and annualized one-time costs (fees and assessments).
- o Evaluating annual costs - determine annual costs and compare to household income to flag "high-cost" projects.

The output from this component is an Annual Costs Per Household report.

d. Assess the community debt history. This component is designed to determine the gross direct debt, direct net debt, overlapping net debt, and overall net debt for the service area based on the present outstanding debt and the proposed new debt (principal component). From these figures a debt repayment schedule for direct net debt is generated to determine the percentage of debt limit used assuming the new debt is taken on. A Summary of Debt

History report is produced as output. It should be noted that this particular component is more for evaluation of the costs for major capital investments than the annual operating costs of concern in this study.

e. Evaluate the service area's financial history. This component involves the calculation of eleven (11) key financial indicators which were selected because of their importance in explaining the difference in credit worthiness between a service area with a strong credit rating and one with a weak credit rating.

- Annual rate of change in population growth (to represent changes in the economic base);
- Operating surplus (deficit) as a percentage of total current expenditures;
- Property tax collection rate (needed only for those few instances where a POTW uses an ad valorem tax user charge system);
- Property tax revenues as a percentage of full market value of property (needed only for those few instances where a POTW uses an ad valorem tax user charge system);
- Overall net debt as a percentage of full market value of real property;
- Overall net debt as a percentage of personal income;
- Direct net debt outstanding per capita;
- Overall net debt outstanding per capita;
- Direct net debt due five (5) years as a percentage of direct net debt outstanding;
- Operating ratio; and
- Coverage ratio.

f. Generate summary reports. The last component includes accumulating output from the other five components to generate two reports:

- Wastewater Facilities Financial Information Report using data from components a, b, and c; and

- Supplemental Financial Information Report using data from components d and e.

The second report requires the application of a user-defined rating scale to determine weak, average, or strong ratings with respect to the calculated values of the financial indicators.

Commercial and industrial dischargers are also to be considered in this program due to their significant contribution to billable flow. When estimating "cost per household" (item C of this section), the nonresidential share (commercial and industrial) is used to determine the residential share of the total annual POTW charges. This is done by accessing the service area file (F-17) to obtain nonresidential users' flow data and thereby determine the user types' proportionate shares.

In using this program the user should remember that though sewer service charge increases would appear to increase revenues, under certain conditions, this may not be the case. If the water supply service charge is increased at any time, due to the concept of price elasticity of demand for a commodity, water consumption and therefore sewer discharges may decrease. Also, an increase in sewer service charge may induce development changes due to the fact that both residential and industrial populations are migratory. In either case the effect in total sewer revenues would be negative even with the increase in service charge. At what point does the change in cost of sewer or water service induce a negative effect on revenues is not easy to determine considering the involvement of many factors such as the economic strength of the service area, the type of industries in the area (in regards to water-intensive characteristics), and the ratio of variable costs of service to fixed costs of service for the POTW. In any case, the utility managers should be aware of this paradox in their planning efforts.

3. Performance Analysis (P-18)

Utility managers must develop performance measures and procedures to analyze achievements relating to objectives. The first step in this analysis is to determine whether relationships that existed in the past should continue to exist in the future; therefore the continuation of a particular activity should be evaluated. The decision to perform or not to perform an activity involves the comparison of the estimated expense of performance with the estimated value of expected benefits. If it is determined that an activity needs to be performed in order to help a utility reach its goals, a choice must be made among the alternative budget plans proposed for the activity.

Ranking the alternative plans based on performance involves developing quantitative performance measures for evaluating the activities proposed. The measures used in this program include: efficiency, effectiveness, workload, and wastewater loadings.

The program, as illustrated in Figure VII-4 at the end of this chapter, consists of six (6) components:

- Evaluate existing activity cost-benefit ratio - This involves using estimated expenses from financial records and a user determined estimated value for benefit.

- Efficiency evaluation - This measures the relationships between cost incurred and amount of work accomplished. It involves calculating unit costs, total costs divided by number of work units ($ per gallon of wastewater treated, $ per cubic feet of sludge generated, etc.) for a proposed plan and comparing them to user-defined standards and to unit costs of other proposed plans. These unit cost standards should be periodically updated to reflect changes in wages, costs of materials, and changes in technology. Standard maintenance activities which involve a significant expense for the utility would be particularly adaptable to this type of performance evaluation.

- Effectiveness evaluation - This evaluation emphasizes results and can be in the form of treatment removal efficiencies or effluent pollutant levels for particular unit treatment processes. The routine for this program involves using EPA's "Diagnostic

Operational Modeling Programs," for each proposed plan, including generation of plots for the performance results and flagging activities with problems. These programs were developed to detect problems in the operations of existing facilities and to identify the cause of the problem as either a "process limitation" or an "operational deficiency". A manager using these programs could zero in on the "effectiveness" problems of the utility for the existing situation and simulate the "effectiveness" of any proposed facility changes in the alternative budget plans. These programs would also assist in the evaluation based on wastewater loading and component efficiency.

- Workload evaluation - Workload is a quantitative measure of performance because it indicates the amount of work actually performed by the utility and the potential for handling additional workload that may be proposed by an alternative plan. This particular routine involves determining available workload capacity based on staff limitations or staff currently used and comparing it to workload requirements of proposed plans.

- Wastewater loading evaluation - The activities proposed by the alternative plans should be judged by the level of service they accommodate. This routine compares projected service area loadings to the loading capacities of activities proposed in various alternative plans.

- Generate summary performance report - This involves compiling and ranking evaluation results for all plans of a specified activity.

It should be noted that not all evaluation categories are needed for evaluating the operations performance of all proposed plans but when choosing between two or more plans, the same type evaluation categories must be used to provide for a meaningful ranking.

4. Budget Planning (P-19)

This activity, whose program flowchart is illustrated in Figure VII-5 at the end of this chapter, is primarily a report generator. The report produced is a work schedule for the preferred budget plan to be used in the budget

implementation process. Once the preferred budget is reviewed and approved by the proper authorities the work schedule can be distributed to the department managers or other persons responsible for the management activities of a group (such as maintenance staff, laboratory technicians, and plant operators).

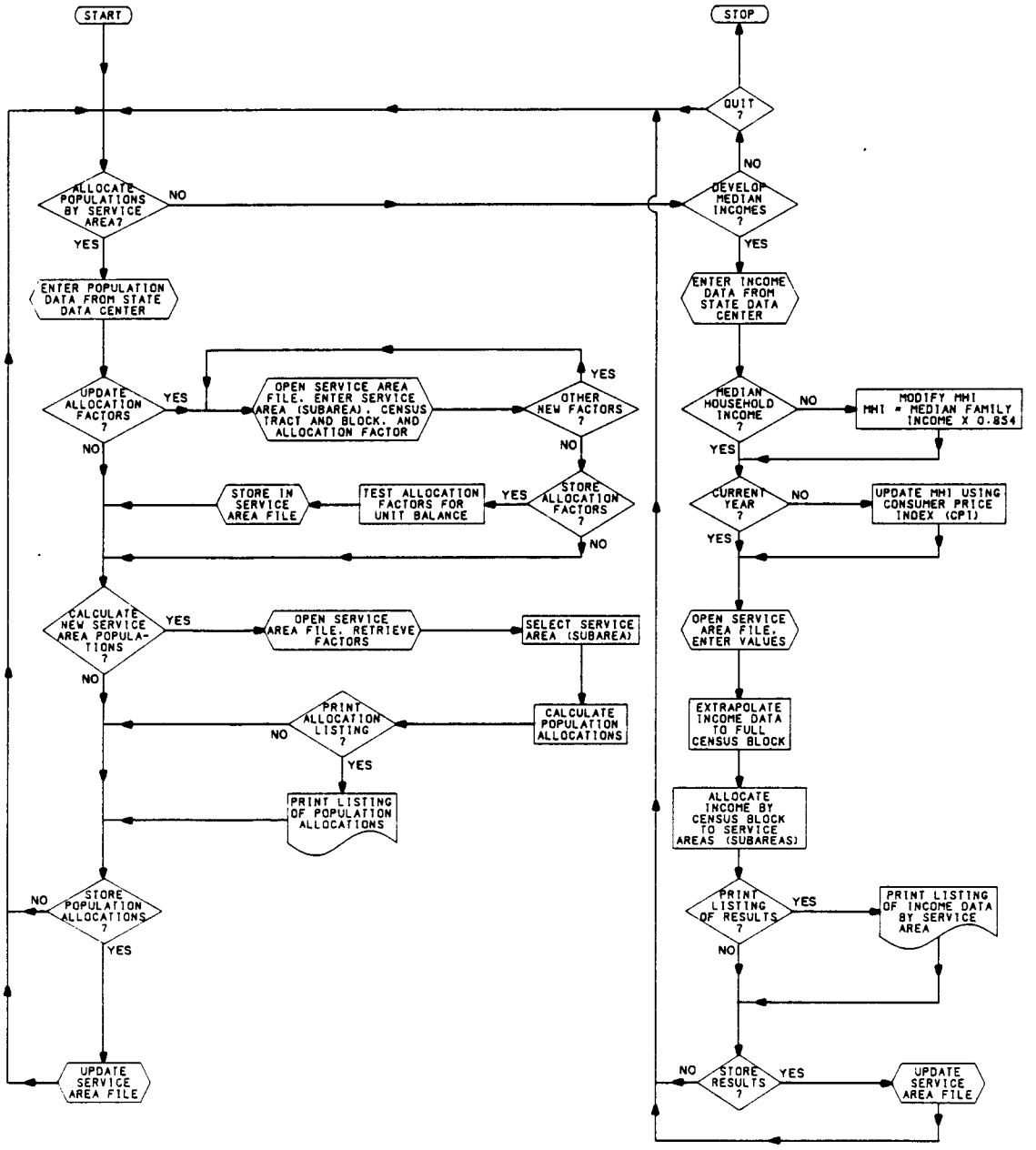

LEGEND

REFER TO FIGURE II-1

FIGURE VII-2

POPULATION STATISTICS PROGRAM P-16

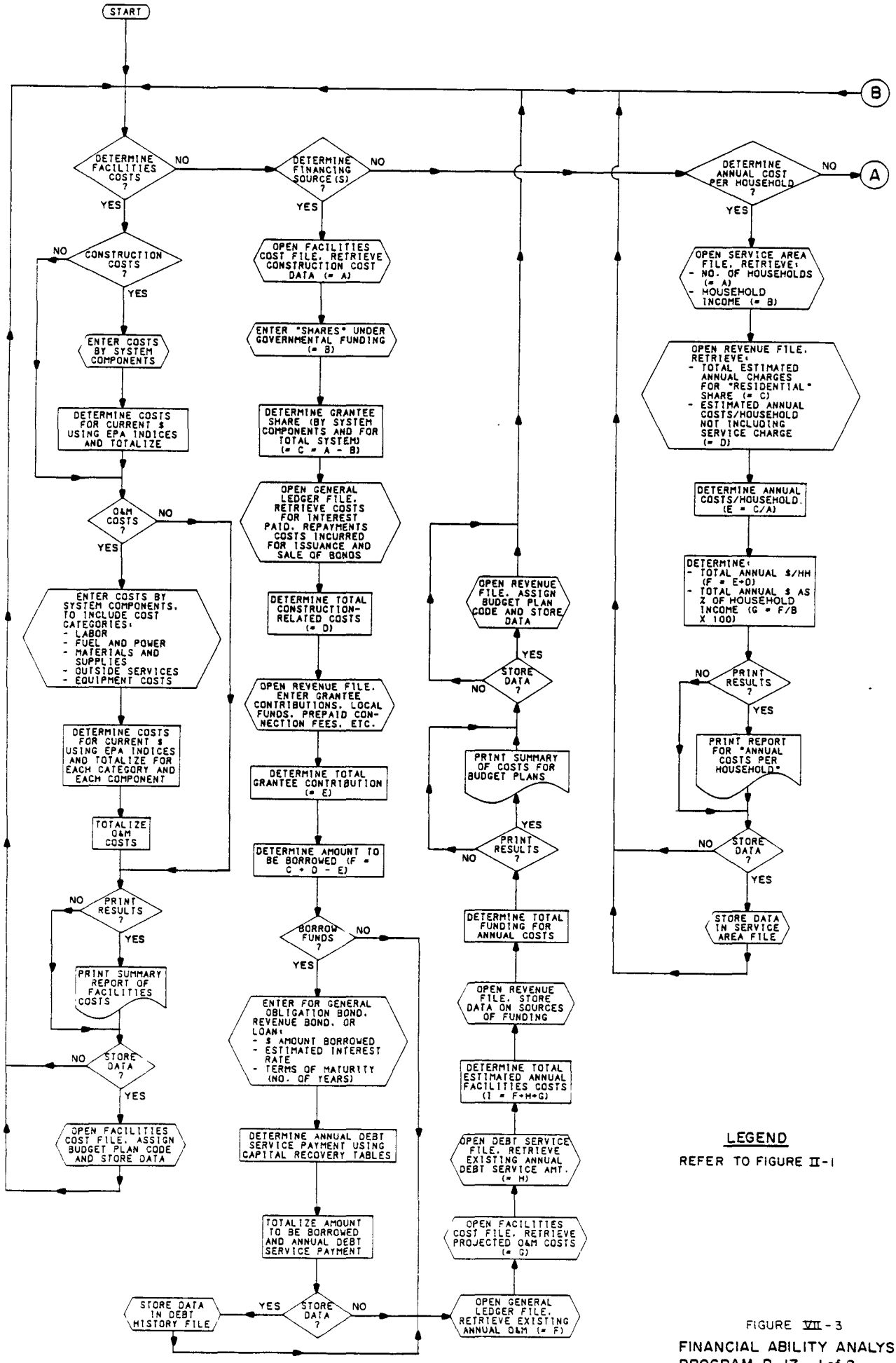

FIGURE VII-3

FINANCIAL ABILITY ANALYSIS PROGRAM P-17 1 of 2

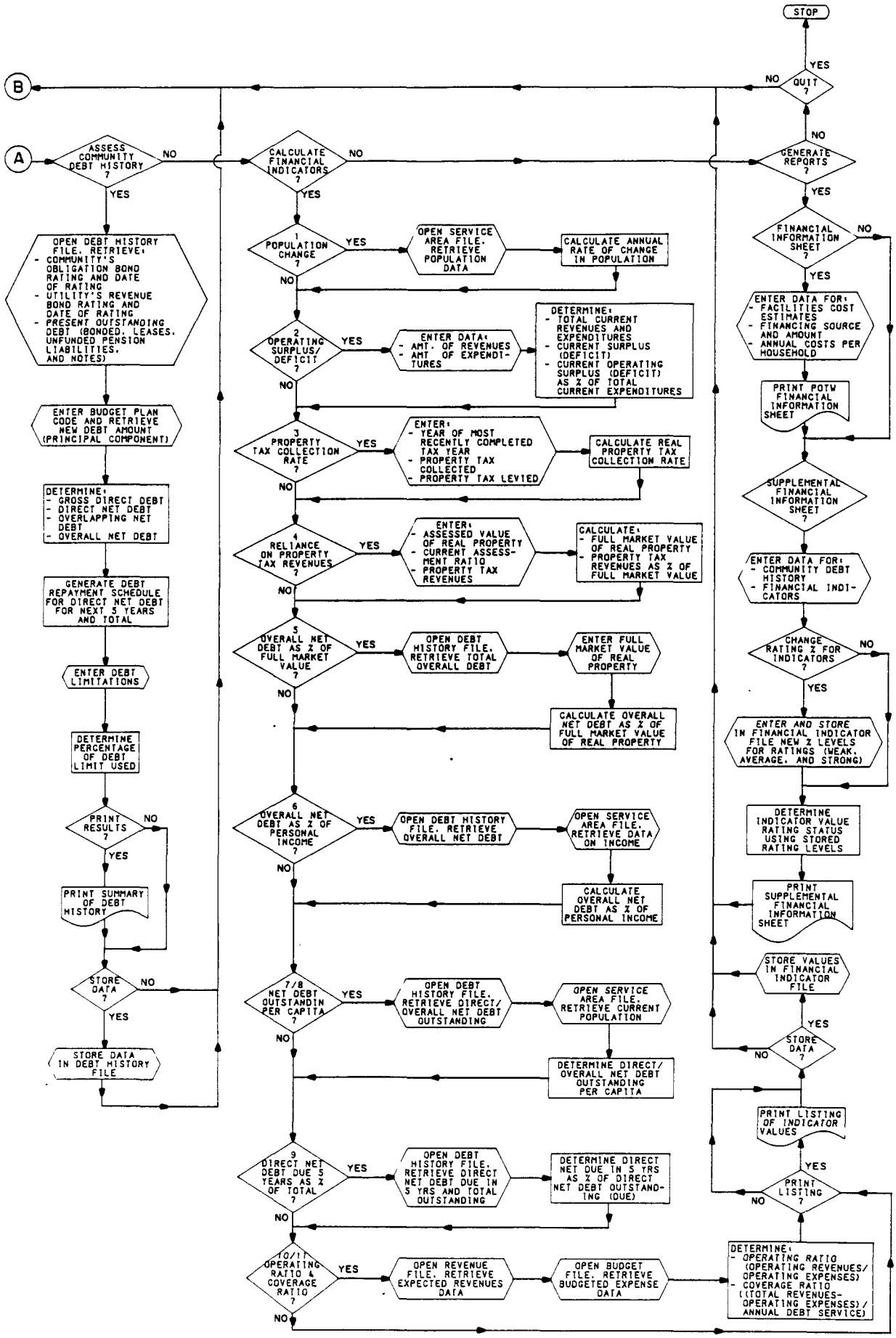

LEGEND

REFER TO FIGURE II-1

FIGURE VII - 3

FINANCIAL ABILITY ANALYSIS PROGRAM P-17 2 of 2

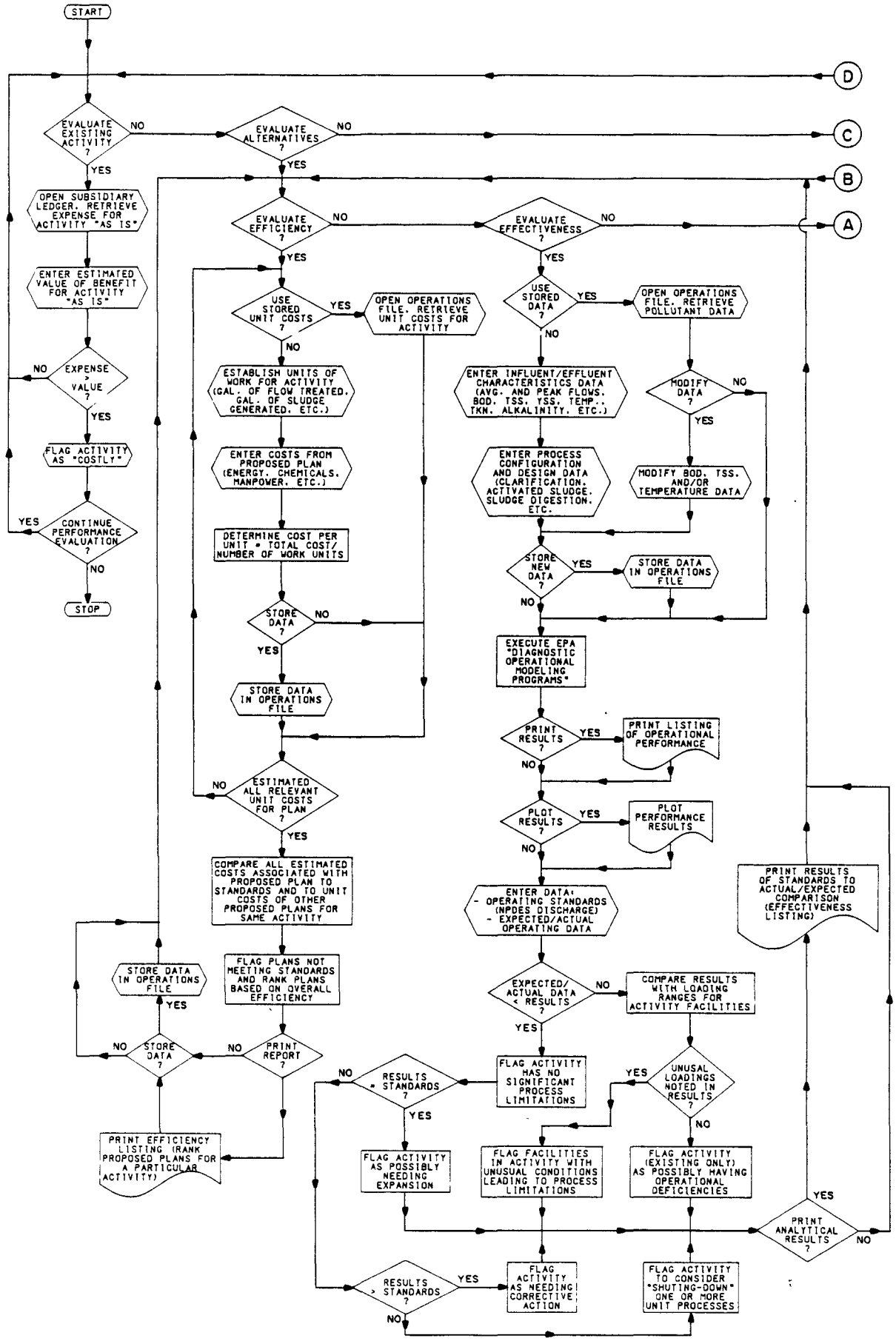

LEGEND

REFER TO FIGURE II-1

FIGURE VII-4

PERFORMANCE ANALYSIS PROGRAM P-18 1 of 2

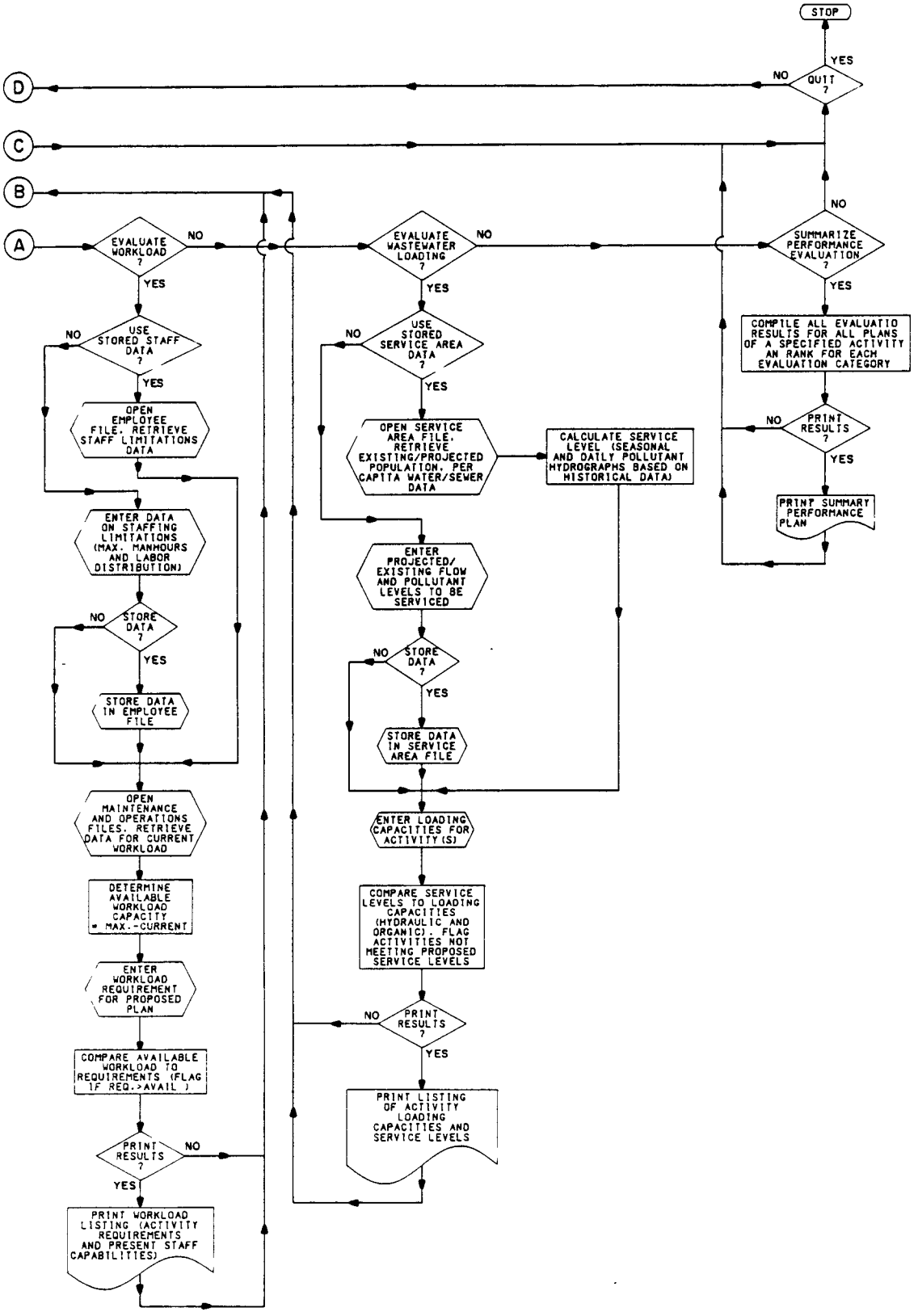

LEGEND

REFER TO FIGURE II-1

FIGURE VII-4

PERFORMANCE ANALYSIS PROGRAM P-18 2 of 2

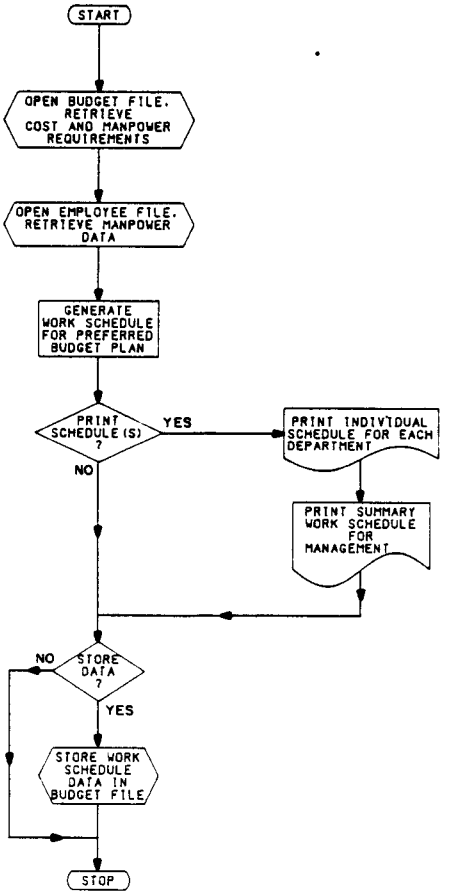

LEGEND

REFER TO FIGURE II-1

FIGURE VII-5
BUDGET PLANNING
PROGRAM P-19

PART FOUR

SYSTEM IMPLEMENTATION

VIII. GENERAL SYSTEM REQUIREMENTS

A. Introduction

The financial management system of this manual is comprised of activities that will enable a POTW to collect, compile (enter and edit), process, and report data using either manual or automated procedures. A successful system is one that efficiently and accurately provides financial and related operations performance information that can be readily used for evaluating, planning, and controlling the POTW operations. The requirements of a system to ensure its success are grouped into two general categories, implementation and operation. These categories and their requirements, described in the following two sections, are applicable to both manual and automated systems. For more specific requirements concerning automation, Chapter IX describes the computer system requirements for a computer-based financial management system.

B. Implementation

System implementation includes planning, design and development of system processes; equipment installation; staff training; and operation start-up/support. System planning steps include identification of legal constraints and routine administrative procedures and controls along with establishing a chart of accounts and the level of flexibility and potential growth desired for the system. System planning also requires an assessment of the existing system in order to evaluate what changes, if any, are required to meet the needs of the POTW. Once this evaluation is made the POTW can follow one of five (5) alternatives:

- Alternative 1 - Continue with the existing system;
- Alternative 2 - Improve the existing system;
- Alternative 3 - Develop a new custom designed system (manual or computer-based);
- Alternative 4 - Install a commercial computer software "package" for critical activities such as general accounting, billing, payroll, etc.; or
- Alternative 5 - Obtain a system developed by a similar utility.

At this point the design and development processes are initiated. The design process can be performed by using this manual's general system design for the desired components. The design process must include deciding which procedures will be computerized and which will continue to be manually processed. If alternative 2 was selected, the improvement could require training staff, purchasing office equipment, and modifying a specific procedure to comply with the proposed procedure of this manual. Alternative 3 would require obtaining outside consulting services (computer service bureau or an accounting and engineering consulting firm to develop the desired system components based on this manual). Alternatives 4 and 5 would require system modifications and may or may not require outside services, depending on the type and amount of modifications required. Another important component of the design process is the incorporation of security controls to assure the financial management system's integrity. The type of security controls desired

must be clearly defined due to their significant effect on both the selection of computer hardware and on the design of computer program logic and execution procedure. These security controls and their operational procedures are described in the following section of this chapter.

Once a system design is approved and developed, the selection and installation of equipment and the training of existing staff or hiring of new staff are the next steps which are to be completed simultaneously because of their interrelationship. It is very important that the system be completely designed prior to equipment selection. With the current popularity of small computers and automated office equipment, many people purchase equipment without completely defining their needs and end up with hardware they do not need or that is incompatible with the system design. The requirement of training staff is very important because the acceptance and capabilities of staff members operating the system can make or break even the most sophisticated system. The training program should include provisions for user-documentation for both manual and computer-based systems.

Operation start-up and support is the final step in the implementation process. This step includes the conversion of existing data which involves reconciliation of old account codes to new codes and obtaining unavailable data that the new system requires. If an existing manual system is being converted to a computer-based system, procedures will be required to transfer historical data onto the new computer system. If one computer-based system is replacing another, special computer programs may be needed to convert the data into a new format. Also some programs on the old system may still be desired and therefore may require modification in order to execute in the new computer's operating system. It is recommended that the operation start-up be scheduled at the start of a fiscal period, a natural point of record initiation. Operation support following startup is necessary because of the changes in reporting requirements, equipment, and applications that will obviously occur over the life of the POTW. Periodic review of the financial management system is also recommended as a part of this on-going operation support.

C. Operation

The three major requirements for the successful operation of a financial management system include the availability of a broad and reliable data base, the employment of qualified, responsible staff to operate the system, and the installation of security procedures to continually monitor and safeguard the systems operations. The data base requirements are to be defined during the planning and design of a system while staff training is to occur after system development. The security procedures are also to be defined during the planning and design stages. Security for a computer-based financial management system can be divided into three types: system security, data security, and accounting security.

System security is concerned with unauthorized access to the computer program or the data. Without protection, either of these can be intentionally or accidentally altered. Any business large enough to have more than one person working on its books should be able to control the access to the different financial management functions; this separation is one of the basic principles of accounting which is the center of this system. Common procedures used to address this type of security problem include:

- Keylock on system unit and/or display station - helps prevent unauthorized persons from gaining access to all system and display stations. When a station has a keylock, the user must have a key to unlock the unit.

- Password - helps prevent persons from gaining access to the system by assigning unique passwords that users must enter at a display station before they can operate the system.

- Restricted access to disk files and libraries - restricts access to files and libraries by requiring each file and library to have a user list. Access is restricted to the users on the list and violation of the access rules results in an error message and a processing halt. An option can be to have successful accesses to protected files and libraries logged which will provide an audit trail.

- Restricted access to computer programs by predefined menus - restricts access to programs and prevents compilation of new programs by predefining the menu to

be automatically displayed to each operator at sign on. Using a menu security function, users can be restricted to the execution of only those jobs associated with his/her menu (or series of menus).

- Data security in communications lines - adds security on communication lines via the attachment of encryption devices between the computer systems communications line adaptor and the external modem.

It should be noted that the applicability of the above system security procedures is highly dependent on the computer hardware and operating system installed. Many microcomputers on the market at this time do not yet have these sophisticated security capabilities, unlike most mini- or main-frame systems which do.

Data security is concerned with preventing stored data from being altered through incorrect or faulty computer operation. The programs should be so designed and coded as to anticipate operator errors and to have built-in defenses against them. In practice, data security begins with the quality control of data collection in the field. Data collection methods should be clearly defined and include preprinted, serialized forms and provisions for authorized signatures for manually collected field data and reliable instrumentation/recording devices, with restricted access, for automatic data collection. File maintenance, the task of keeping the permanent computer data base updated, includes adding, changing, and in some cases deleting, data stored on record (manual or computer). A computer-based system can incorporate the use of "temporary" files for updating records. These files will accumulate data for a given period and at the end of the period, at which time the data has been verified and entered into a permanent file, the data will be deleted from the temporary file. Once utilized, they will be initialized and recreated during the next updating cycle. The data update process of a computer-based system can be designed to not only provide security control by requiring passwords for access to specific functions, but can also provide quality control by activating file maintenance or editing programs that include preassigned values for ranges, maximums, minimums, averages, etc. to "check" quantitative field data values (flows, dates, coordinates, budgeted amounts, etc.) for inconsistencies. The inconsistencies or errors noted will then be "tagged" for manual checking to determine the reason for or source of a

problem. Qualitative field data (names, codes, addresses, etc.) can also be checked by allowing only certain pre-specified character strings to be used and therefore provide a computer check. For data that has no established "check" values, one staff member can initially enter the data followed by a second member who re-enters on top of the first entry. This type of verification is common practice for many data entry applications and can be also used for manual record update and storage procedures. Another part of data security involves data backup for those occasions when control is unexpectedly lost as in a power failure. A well-designed program will remind the user to implement back-up at times designated as strategic data updating, such as before each ledger posting operation. Generally a three-disk (or tape) rotation scheme is sufficient for accounting and other financial data. This scheme involves loading data (backing up) at the end of a prespecified time period onto an off-line disk (tape) using a different disk (tape) each time. After three backups the disks (tapes) are rotated for the next three back-up periods and so on. It should be noted that separate backup disks (tapes) should be maintained for the operating system programs and the source codes of all application programs.

Accounting security is concerned with maintaining audit trails of documents leading to each figure reported by the accounting element. These security procedures include designing the accounting program's ledger posting routine so as not to allow batches to be posted to the general ledger unless they are balanced and, once posted, not to allow them to be changed. Any errors detected at this point should only be corrected via the use of an adjusting transaction which compensates for an error without hiding it. Also, a well-designed program should automatically print a batch just before posting for a hardcopy listing.

In regards to staff qualifications, the training program of the implementation process is the key, along with well documented users manuals, to ensure competence. A computer-based system can assist in the operations of a system by making use of menu driven programs. This requires developing programs that when executed, prompt the user through data updating, processing, and reporting routines. When well-designed, all a user has to do is answer questions or select functions requested by the programs.

The proper distribution of task assignments among the staff is also very important to the operations of a financial management system and should be completed during the implementation stage. These assignments should be established based on a staff member's capabilities and experience and should be clearly defined so that each staff member fully understands his or her responsibilities. Most small POTW's have one or two persons performing several functions that larger POTW's can assign to a group of staff members who usually make up a clearly defined department which was created for a specific function within the utility's organization. Because of this, most small POTW's may have a problem in meeting the needs of separation of duties required for system security purposes as mentioned previously. But the computer-based system can have the programs so designed as to set up other security controls to assist in protecting the utility against unauthorized alterations to the computer programs and the data base. These controls were described previously in this section as data and accounting security controls.

Depending on the level of computerization and on which functions of the financial management system presented in this manual a utility decides to implement, certain staff members will be involved in setting-up and in performing the on-going operations of the system. Top level management, such as the plant supervisor or superintendent, would conduct the initial planning with the help of this manual. More detailed planning and preliminary design would involve not only top level management but also the various levels of management or, in the case of a small POTW, staff members relevant to the particular elements selected to be implemented. The accounting and replacement reserve elements would require management to involve staff members involved in the various accounting functions including bookeeping, payroll, customer billings and purchasing and staff members in utility operations such as the plant engineer or the chief operator who could assist in the establishment of an inventory system. The cost recovery, budgeting, and planning elements would require top management to confer not only with the accounting staff, but also the plant engineer, the utility's engineering consultants (if applicable), and the municipality's or district's planners and council members. Note the people involved for these elements depend highly on the type of ownership and on the size of the POTW. For more detailed design and development, the POTW would either have to add to their staff a system analyst and computer programmer or

employ the service of computer consultants. The computer consultants could be strictly business application consultants if only the accounting and replacement reserve elements were desired. For the remaining elements, a consultant should be able to provide the combined services to meet both engineering and computer needs.

The ongoing operations required for a working financial management staff is also dependent on the various elements and their components implemented. The accounting element would require the same staff members currently responsible for the accounting functions performed with additional training to instruct them on the new accounting procedures and, if applicable, the procedures in operating the computer equipment. The inventory function of the accounting element and the replacement reserve element would require the accounting staff to work closely with the plant operations staff. The revenue generation element would require input from both the accounting staff and the plant supervisor or engineer in order to determine revenue requirements and service area characteristics to develop the service charge rate schedule. The budgeting element would require the accounting staff and all levels of plant management to work together to perform the functions required in the evaluation of operation performance and analyses of revenue and expenditure in order to generate a budget and make cash flow forecasts. The planning element functions would be primarily operated by the plant management who would use the input from other sources via access to the data base file.

IX. COMPUTER SYSTEM REQUIREMENTS

A. Introduction

The computer equipment (hardware), programs (software), and supplies needed to implement the financial management system described in this manual will vary depending on the size of the POTW. For discussion purposes, it is assumed that the POTW treats 1.0 million gallons of wastewater a day and serves approximately 2,500 customers (accounts). It is also assumed that the entire financial management system will be implemented.

There are a multitude of vendors selling hardware, software, and supplies in the market today that possess the capability of running the financial management system. This chapter does not identify specific manufacturers or software sources. Instead, all specifications are given in generic terms to allow for user selection. It is firmly suggested that the POTW select system components through local retail outlets that provide in-house maintenance of all the products they sell. Experience has shown that the best equipment and software is only as good as the service that follows the sale.

B. Hardware Requirements

The minimum hardware requirements for the POTW described in the previous section include the following:

- Central processing unit (CPU) with 64 k bytes of directly addressable random access memory (RAM);
- Single floppy disk drive with a minimum of 140 k bytes of storage per disk;
- Hard disk drive with a minimum of 5 m bytes of storage;
- 9-inch (minimum) cathode-ray tube (CRT) monitor;
- Typewriter style keyboard with separate numeric key pad; and
- Printer with both tractor and roller feed that can handle variable width forms and 132 characters per line, with a minimum print speed of 80 characters per second.

Typical prices for systems with these characteristics are currently in the $3,500 to $6,000 range. However, prices have been dropping constantly as technology advances.

Certain components described in the list above can be substituted for more or less powerful units if the POTW happens to be larger or smaller, respectively, than the system described in Section A. Typical of the substitutions that could be considered are:

Large Plant	Small Plant
o CPU with more random access memory	o Replace hard disk with a second floppy disk drive
o More storage capacity on the hard disk	o Slower printer
o CPU capable of supporting more than one user concurrently (shared processing)	
o Higher speed or additional printer.	

It is important to emphasize the need for the POTW to study and carefully select the software for the financial management system before making any decisions about hardware.

Another consideration that could influence the choice of hardware is the physical environment in which the system will operate. Ideal conditions generally are a dust-free room where temperature can be maintained at or below 72°F and humidity is controlled to 45 percent. If the location has good controls for modifying temperature and humidity and minimizing dust, then most systems will work well. If the location will be subject to significant temperature or humidity variations or considerable amounts of dust, the selected equipment must be capable of sustaining operation under those stresses. Again, the more severe the operating environment is, the more important local service will be. A fourth environmental factor to consider is the reliability of the power supply. Power failures, interrupts, and/or surges can damage hardware and destroy data stored on disks. Surge suppressors, and for larger systems back-up power supplies, are considered necessary.

C. Software Requirements

Software generally falls into two categories: system and application. System software, often referred to as the computer's operating system, is the instruction set that defines the control commands for the central processor. The operating system can be permanently stored in the computer's ROM (read only memory), or can be stored on disk for subsequent loading after the system is turned on. In most cases the computer manufacturer will sell a customized operating system designed to take advantage of special functions built into the machine. These manufacturers normally offer one or two other general operating systems that will increase the systems' marketability. Selection of the operating system is not as important as selection of the application software; the two are interdependent, however.

Application software is the series of programs that actually make up the financial management system. The management system described in this manual is not currently available as a single, integrated software package. Some of the elements, particularly accounting, are commercially available as an integrated package from vendors. Other elements must be purchased as separate components and linked together by a custom programmer for the POTW.

Application software is generally written in a specific programming language. The languages most frequently used include:

- Assembler
- BASIC
- COBOL

Assembler, sometimes incorrectly referred to as the machine language, is machine-specific. That is, if a program is written on one brand and model of machine, it most likely will not function on any other brand of machine, or sometimes even the same brand but different model. Commercial software developers have responded to this problem by usually offering their products in several different assembler languages for the leading computers. The advantage

that assembler offers over other languages is processing speed - often 10 to 30 times faster than BASIC or COBOL.

BASIC and COBOL are higher level languages than assembler - that is they have a series of single-word commands that cause the computer to perform functions that would require several assembler commands to execute. These languages are easier to employ, but the operation is slowed down considerably.

A decision on application software should be made only after a careful review of the POTW's needs and a detailed study of the available software. The decision must be made with a full understanding of the abilities of the employee that will be running the system - a complex, programmer-oriented system will be doomed if a clerk or junior aide is expected to run it. The "better" commercial software usually employs "menus" or pre-formatted screens that prompt the user to enter appropriate information. In addition, a properly designed program will screen the data supplied by the user and identify, through error messages, any incorrect response and offer directions for correcting the error. Careful consideration should also be given to the level of security control built into the system. Since sensitive, confidential records are to be stored, it is important to have a system that deters unauthorized access to files and programs.

As mentioned before, certain substitutions can be made when the POTW is larger or smaller than the plant described in Section A. Since there are currently no generic specification standards for software, the only consideration to be given in selection is whether to implement a complete financial management system or stand-along programs such as payroll or customer billings. Obviously, a small plant may not need to computerize all the activities described in this manual and a large plant may have many other applications for a computer. The important thing to stress is that, for any POTW, the activities outlined in this manual should be accomplished, even if by hand.

D. Selection Guide

Computers have become a powerful and dynamic force in our society. They can provide a low-cost, high-speed, reliable solution to many problems involving data management and manipulation. On the other hand, when improperly applied or poorly planned, computerization can lead to frustration, reduced output, or excessive costs.

In the field of computer applications, it is important to strive for a balance between these important factors:

1. Computer power;
2. Cost;
3. Flexibility; and
4. Security.

The goal of the POTW's planning efforts is to optimize these factors while meeting the application needs.

Before selecting a system, it is important to gather all available information on the application needs and the available software and hardware that might fit those needs. With the variety of programs and equipment on the market today, it is usually no problem to identify a number of alternatives that can accomplish the goals of most normal applications. However, the important and most difficult thing to accomplish is the balance of the factors mentioned before - providing adequate computer power to meet the needs, at the lowest possible cost, while allowing flexibility for future expansion or changing needs and maintaining security control. Another factor that is very important in the microcomputer field (because it is changing so rapidly) is to select systems that will have adequate maintenance and support after installation.

Table IX-1 lists some important selection criteria that should be considered when choosing a computerized financial management system. Table IX-2 presents some ranking criteria for both software and hardware.

TABLE IX-1

IMPORTANT SELECTION CRITERIA

1. The system must be easy to use (i.e. menu-driven).

2. The database management language must be efficient and effective.

3. There must be adequate productivity aids to keep customized programming requirements to a minimum. Report generation software with flexible format is desirable.

4. Response time must be reasonable when the system is at peak operating loads. This applies to both processing time and input/output activities.

5. The system must be compatible with a high percentage of other vendors' software and hardware.

6. The system must be large enough to do the job it is intended to do.

7. The software and hardware vendors must provide adequate information on system enhancements and changes, and prompt maintenance service. Remote diagnostic capability would be a desirable feature.

8. The software and hardware must be available within the required time frame.

9. The system must be energy efficient and reliable.

10. The system must provide for security including system security, data security, and accounting security.

11. The cost of the system, above all other criteria, must be within budget.

TABLE IX-2

POTENTIAL SYSTEM RANKING CRITERIA

Software	Hardware
Documentation	Availability
Ease of Programming	Documentation
Ease of Use	Ease of Expansion/ Upgrade
Purchase Cost	Ease of Use
Run Time	Internal Storage
Security Control	Maintenance Cost
User Training	Maintenance Response Time
	Purchase Cost
	Reliability
	Response Time
	Software Compatibility
	User Training

X. GOVERNMENTAL REGULATIONS

Governmental regulations that affect financial management operations for a POTW define relevant terms, establish procedures and their bases, and dictate restrictions and limitations. These regulations are primarily an attempt to standardize accounting practices, maintain the auditability of financial records, ensure the proportionality of cost recovery techniques, protect against the occurrence of unaffordable budgets and indebtedness, and guarantee the integrity of the financial operations as a whole along with compliance with NPDES treatment standards.

Currently, the Federal government, through EPA, regulates POTW financial management practices using the Clean Water Act and the Construction Grant Regulations. These regulations basically address the revenue generation element of financial management, particularly the determination of costs of services and the establishment of user charges. Other regulations governing a particular POTW include those enacted by State and local governments. There are also many guidelines and standards addressing financial management functions that have been established by institutions such as the National Association of Regulatory Utility Commissioners (NARUC), the American Institute of Certified Public Accountants (AICPA), the U.S. General Accounting Office (GAO), the U.S. Office of Management and Budget (OMB), and the National Council of Governmental Accounting (NCGA).

EPA construction grants regulations that address the financial management system of a POTW include:

- 40 CFR 35.2106 "Plan of operation":

  > "The applicant shall submit a draft plan of operation that addresses development of an operation and maintenance manual; an emergency operating program; personnel training; <u>an adequate budget identifying the basis for determining the annual operation and maintenance costs and the costs of personnel, material, energy and administration</u>; operational reports; laboratory testing needs; and an operation and

maintenance program for the complete waste treatment system."

A draft plan of operation is required prior to either Step 3 Award or Step 2 and 3 Approvals of the pre-performance certification period.

- 40 CFR 35.2140 "User charge system", paragraph (d) - Financial management system:

  "Each user charge system must include an adequate financial management system that will accurately account for revenues generated by the system and expenditures for operation and maintenance (including replacement) of the treatment system."

The regulations also define the POTW's responsibilities and functions and, therefore, the expenditures to be accounted for in a financial management system. These expenditures include operation and maintenance costs incurred during the useful life of the treatment works which are necessary for managing and maintaining the facility. The term "operation and maintenance," when used in the regulation, includes replacement. Replacement costs are defined in section 212(3) of the Clean Water Act as "...Those expenditures for obtaining and installing equipment accessories, or appurtenances during the useful life of the treatment works necessary to maintain the capacity and performance for which such works are designed and constructed." Chapter IV provides a detailed description of a utility's assets to be included in the calculation of replacement costs for determining annual reserve amounts to be budgeted. It should be stressed that the definition does not include expenditures for expansions, upgradings, or betterments that would add to the book value of the assets or improve the treatment capacity and performance of the facility. Also to be noted is that eventhough depreciation of fixed assets (land, buildings and other items), as an expense, is considered to be a capital cost and is not to be included in the development of user charge rates, "perishable" components (i.e., windows, electrical outlets, and plumbing) are considered to be appurtences and are to be included in replacement costs calculations.

State and local regulations concerning financial management systems for utilities vary depending on the particular State and form of utility ownership and its organization. As stated in Chapter I, this manual is only concerned

with ownership types that include single municipalities, independent authorities, joint ownerships, and special purpose districts. Whatever the form of ownership or the regulatory authority having control, financial information required for particular regulatory purposes is generally the same. Items affected include:

- General accounting and depreciation practices.
- Revenue generation techniques - includes sewer service charge rates determination, financing, metering and billing practices.
- Reporting requirements - includes financial position and operating results.

Financial guidelines and standards affecting POTW financial operations include the Generally Accepted Accounting Principles (GAAP) which establish the type of accounting that government entities should use, its basis and focus, and the reports that are regularly produced. These principles were set forth by the NCGA in their Statement 1, "Governmental Accounting and Financial Reporting Principles" (March 1979 version). Other NCGA statements include Statement 2 ("Grant, Entitlement, and Shared Revenue Accounting by State and Local Governments"), Statement 3 ("Defining the Governmental Reporting Entity"), and Statement 4 ("Accounting and Financial Reporting Principles for Claims and Judgements and Compensated Absences"). Along with these statements, NCGA has also provided documented interpretations.

These government accounting standards are enforced by the standardization of auditing procedures and goals established by the AICPA as published in their audit guide, "Audits of State and Local Government Units". Due to the expanding role of independent auditing in the public sector, the GAO has also prescribed generally accepted auditing standards (GAAS) in "Standards for Audit of Governmental Organizations, Programs, Activities, and Functions" (the "yellow book").

There are many recommended systems of accounts for wastewater facilities, including those proposed by the National Association of Regulatory Utility Commissioners and the Water Pollution Control Federation (MOP No. 10). There

are also many State and local laws that conflict with generally accepted accounting standards. It is not the purpose of this manual to make recommendations to State or local governments in order for them to comply with these standards. Therefore, the POTW's must assume the responsibility of having an accounting system that makes it possible to satisfy both the federal standards and the local and State regulations.

In regards to determining the allowable costs to be accounted for in revenue requirement calculations and budget preparation, the OMB has produced circular A-87, "Cost Principles for State and Local Government", that sets forth principles for determination of direct and indirect cost components. These principles are designed to provide that federally-assisted programs, in this case POTW grantees, bear their fair share of the recognized costs. Another circular, A-102, entitled "Uniform Requirements for Assistance to State and Local Governments", promulgates standards for establishing consistency and uniformity among Federal agencies in the administration of grants to State and local governments. The standards set forth include standards for grantee financial management systems, financial reporting requirements, monitoring and reporting program performance, and property management standards.

Another control mechanism at the local level incorporates the pretreatment requirements of the EPA Construction Grants Program. These requirements can be met through a program that is designed to recover revenues from contributing industrial users to cover the operating costs of the program. The funding mechanism options that can be mandated include a service charge where pretreatment charges are based on estimated or actual service used such as monitoring activities; an industry surcharge which multiplies the existing user charge by a pretreatment factor based on industry class; and a pollutant strength charge where pretreatment charges are based on amount of pollutant discharged.

Government regulations at the local level can be used to enforce federal and institutional standards and principles and to ensure that the financial system is effective, particularly in regards to revenue collection. The methods available for enforcing payment at any one locality depends on the

statutory provisions, regulations, and to some extent, the precedent setting court cases appropriate to that particular location. The enactment of a local sewer use ordinance is a requirement by the EPA Constructions Grants Program as evidence of compliance. According to federal regulations, it is to be a control instrument setting forth rules and regulations governing the use of the public sewer system by prohibiting new sources of inflow and by requiring proper design and construction techniques for new connections. Municipalities of small and moderate size can expand on this definition and legislate sewer use ordinances that are self-contained in that they encompass all elements of control, including financing options and the establishment of rentals or service charges. Intermunicipal agreements, another type of control instrument, are also required by the Construction Grants Program where two or more jurisdictions are served by the POTW. These agreements are to ensure that all jurisdictions will be obligated to comply with financial arrangements and procedural requirements under the grant.

APPENDIX A

GLOSSARY

APPENDIX A

GLOSSARY

References:

1. American Public Works Association, et.al. Financing and Charges for Wastewater Systems. 1973.

2. Municipal Finance Officers Association. Governmental Accounting, Auditing, and Financial Reporting. 1980.

3. National Association of Regulating Utility Commissioners. Glossary of Depreciation Terms. November 10, 1980.

4. National Association of Regulating Utility Commissioners. Uniform System of Accounts for Class C and D Sewer Utilities. 1977.

5. Water Pollution Control Federation. Uniform System of Accounts for Wastewater Utilities. Manual of Practice No. 10. 1970.

GLOSSARY

Accelerated depreciation. A generic term for any of the depreciation methods which results in larger depreciation accruals in the early years of an asset's life and diminishing in amount in the later years of the life of that asset. Examples: Sum-of-Years-Digits, Double-Declining-Balance, etc.

Access time. The time required to obtain data from a computer's main memory or a storage device, such as a diskette.

Accessories. In relation to POTW's, they are generally considered to be piping, ductwork, or electrical connections which have become part of the real property and are required for equipment to fulfill its function. They are buried in structures and/or otherwise relatively fixed to a permanent structure.

Account. A record in which data relating to a certain specified subject are accumulated.

Account number. The number assigned to a specific account title in a system of accounts. Where accounts are numbered, the account number and account title may be used interchangeably. When a single owner operates more than one utility or enterprise (as, for instance, a city that may operate water, electric, and wastewater utilities), the use of an identifying symbol in each of the several systems of accounts may prevent confusion. See also coding.

Accounting period. A period at the end of which and for which financial statements are prepared. See also fiscal period.

Accounting procedures. All processes which discover, record, classify, and summarize financial information to produce financial reports and to provide internal control.

Accounting system. The total structure of records, formal and informal, together with the procedures which discover, record, classify, summarize, and report information on the financial position and results of operations of a utility or any of its funds, fund types, balanced account groups, or organizational components.

Accounts payable. A liability account reflecting amounts on open account owing to private persons or organizations for goods and services received by a utility (but not including amounts due to other funds of the same utility).

Accounts receivable. An asset account reflecting amounts owing an open account from private persons or organizations for goods and services furnished by a utility (but not including amounts due from other funds of the same utility). Amounts due from other funds should be reported separately. See also account receivable - users.

Accounts receivable - users. Accounts receivable arising primarily as a result of furnishing sales of material or service to users.

Accrual basis. The basis of accounting under which revenues are accounted for when earned or due, even though not collected, and expenditures are accounted for as soon as liabilities are incurred, whether paid or not.

Accrued expenses. Expenses incurred up to a given date, but not paid; in some cases, not payable (due) until a future date.

Accrued income. Income earned up to or due at a given date, but not collected.

Accumulated depreciation. A valuation account to record the accumulation of periodic credits made to record the expiration of the estimated service value of the utility's fixed assets. See also depreciation.

Activity. (1) Specific and distinguishable line of work performed by one or more organizational components of a utility for the purpose of accomplishing a function for which the utility is responsible. For example, collection, pumping, treatment, laboratory, general administrative, etc. (2) Expenditure classification according to the specific lines of work performed by organization units. The segregation of the expenditures made for each of the utility's activities constitutes an activity classification.

Actuarial analysis (study). The translation of a body of statistics by means of the mathematical tools of the actuary, into data or charts that display the relationship between retirements and age, and indicated average life.

Actuarial basis. A basis used in computing the amount of contributions to be made periodically to a fund or account so that the total contributions plus the compounded earnings thereon will equal the required payments.

Administrative costs. Operating costs incurred in performing administrative activities. For a POTW system these activities include, but are not limited to, customer billings generation and collection, general accounting, payroll generation, purchase order processing, and special services (engineering, legal and account). See also operation, maintenance, and replacement costs.

Algorithm. A series of steps organized to solve a problem.

"All-inclusive" operating statement. The basic financial statement which, under NCCA Statement 1, consists of the operating statement and the statement of changes in fund equity combined into a single GAAP basic financial statement.

Allowance for uncollectibles. A valuation account used to indicate the portion of an account which it is estimated will never be collected.

Amortization. The process of allocating an asset, a liability, or an amount over future accounting periods. (1) Gradual reduction, redemption, or liquidation of the balance of an account according to a specified schedule of times and amounts. (2) Provision for the extinguishment of a debt by means of a Debt Service Fund (sinking fund).

Annual budget. A budget applicable to a single fiscal year. See also budget and operating budget.

Annuities payable. A liability account reflecting the amount of annuities due and payable to retired employees in a public employee retirement system.

Annuity. A series of equal money payments made at equal intervals during a designated period of time.

Annuity, amount of. The total amount of money accumulated or paid during an annuity period from an annuity and compound interest at a designated rate.

Annuity period. The designated length of time during which an amount of annuity is accumulated or paid.

Application program. A computer program designed to meet specific user needs, such as a program that controls inventory or monitors a manufacturing process.

Appraisal. (1) The act of appraising. See also appraise. (2) The estimated value resulting from such action.

Appraise. To make an estimate of value, particularly of the value of property. If the property is valued for purposes of taxation, the less-inclusive term "assess" is substituted for this term.

Appropriation. A legal authorization granted by an administrative body to make expenditures and to incur obligations (liabilities) for specific purposes.

Appropriation account. A budgetary account set up to record specific authorizations to spend. The account is credited with original and any supplemental appropriations and is charged with expenditures and encumbrances.

Appropriation ledger. A subsidiary ledger containing an account for each appropriation. Each account usually shows the amount originally appropriated, transfers to or from the appropriation, amounts charged against the appropriation, the net balance, and other related information.

Appurtences. Any part of a POTW grantee's fixed assets that were constructed and are ancillary or necessary for equipment to operate or perform a function. They can be defined so broadly as to include structures housing process equipment (buildings) and, in the case of wastewater treatment facilities, the tankage and plumbing that is buried, or so large that they are considered permanent fixtures.

ASCII code. The American National Standard Code for Information Interchange. The code by which characters are translated into binary numbers in a computer's memory. Each ASCII code number uses 1 byte of computer memory and is used to control printers and communication devices.

Assess. To value property officially for the purpose of taxation.

Assessed valuation. A valuation set upon real estate or other property by a government as a basis for levying taxes.

Assessment. (1) The process of making the official valuation of property for purposes of taxation. (2) the valuation placed upon property as a result of this process. (3) The charge against any particular parcel of land within the boundaries of an irrigation, water, sewer, drainage, or other district created for the purpose of constructing improvements, or a share of the total cost of such improvement, usually based on the proportionate benefits received by such parcel as a result of the improvement.

Assessment role. In the case of real property, the official list containing the legal description of each parcel of property and its assessed valuation. The name and address of the last known owner are also usually shown. In the case of personal property, the assessment roll is the official list containing the name and address of the owner, a description of the personal property, and its assessed value.

Assessments, special. A direct tax levy assessed against property to pay for property improvements that ordinarily are a direct benefit to the property itself.

Assets. Any real property and property rights that are of value to and owned by the enterprise (utility).

Capital - Property of a permanent nature or intended for long continued use or possession, employed in or necessary for the conduct of an undertaking, and representing the investment of money or its equivalent. Examples include trucks, meters, pumps, and motors.

Fixed - Permanent property, such as land, buildings, sewer collection pipelines, tanks, rights and benefits (tangible and intangible), permanently employed in the rendering of a service or in the production of a product.

Intangible - Any element of value applied to permanent property of a nonphysical nature such as a franchise, trademark, patent, copyright, good will, cost of organizing, developing, and establishing; also, such items as going value, right of access, water right, and power right.

Physical - See assets, tangible.

Tangible - Permanent property of a physical nature such as lands, buildings mineral deposits, wells, reservoirs, plant equipment of all kinds, utensils, furnishings, merchandise, intended for immediate use and permanent improvements.

Associated company. One of the number of individual utilities owned or operated by a parent company. See operating municipality.

Audit. A methodical examination of utilization or resources. It concludes in a written report of its findings. An audit is a test of management's accounting system to determine the extent to which internal accounting controls are both available and being used. Various types of audits include internal audit, independent audit, financial and compliance audit, program compliance audit, single audit, performance audit, pre-audit, and post-audit.

Audit program. A detailed outline of work to be done and procedures to be followed in any given audit.

Audit report. The report prepared by an auditor covering the audit or investigation made by him. As a rule, the report should include: (a) a statement of the scope of the audit; (b) explanatory comments (if any) concerning exceptions by the auditor as to application of generally accepted auditing standards; (c) opinions; (d) explanatory comments (if any) concerning verification procedures; (e) financial statements and schedules; and (f) sometimes statistical tables, supplementary comments, and recommendations. The auditor's signature follows item (c) or (d).

Auditor's opinion. A statement signed by an auditor in which he or she states that he or she has examined the financial statements in accordance with generally accepted auditing standards (with exceptions, if any) and in which he or she expresses an opinion on the financial position and results of operations of some or all of the constituent funds and balanced account groups of the government as appropriate. See unqualified certificate.

Authority. A government of public agency created to perform a single function or a restricted group of related activities. Usually such units are financed from service charges, fees, and tolls, but in some instances they also have taxing powers. An authority may be completely independent of other governments for its creation, its financing, or the exercise of certain powers.

Authority bonds. Bonds payable from the revenues of a specific authority. Since authorities usually have no revenues other than charges for services, their bonds are ordinarily revenue bonds.

Automatic data processing (ADP). See electronic data processing (EDP).

Backup. The process used to create a copy of data entered into the computer. This process should be done on a regular basis so that data will not be lost if the computer malfunctions.

Bad debts. Accounts receivable judged impossible or impractible to collect. Sometimes called Uncollectible Accounts.

Balance sheet. A statement showing the financial position of an enterprise at a specific date, ordinarily prepared from books kept by double entry. The basic financial statement which discloses the assets, liabilities, and equities of an entity at a specified date in conformity with GAAP.

Balance sheet account. An account that is used to show the financial condition of the utility as of a certain date.

BASIC. (Beginner's All-purpose Symbolic Instruction Code) a widely used interactive computer programming language developed by Dartmouth College that is especially well-suited to personal computers and beginning users.

Basic financial statements. Those financial statements, including notes thereto, which are necessary for a fair presentation of the financial position and results of operations of an entity in conformity with GAAP. Under Statement 1, basic financial statements include a balance sheet, an "all inclusive" operating statement, and (for proprietary funds, pension trust funds and nonexpendable trust funds) a statement of changes in financial position. See also combined statements - overview, combining statements - by fund type, general purpose financial statements, and generally accepted accounting principles.

Baud. A unit of computer data transmitting/receiving speed, roughly equal to a single bit per second. Common baud rates are 110, 300, 1,200, 2,400, 4,800, and 9,600 bits per second.

Benefits. The advantages gained, tangible or intangible, by the installation or construction of a system or works for one or more given purposes. When the term is used in connection with drainage and flood control districts, it applies to the value of the resulting reduction in high groundwater level and danger from flooding, due to the construction of the system. Benefits will vary with each particular piece of property. When the beneficiaries are to be assessed, the cost of the construction work is usually apportioned against each parcel of property in accordance with the estimated or actual benefit received. Benefits may also be used as a measure of justification of projects proposed for construction at public expense.

Benefits, flood. The value of the flood protection as estimated in terms of damage eliminated or other advantageous effects of the proposed work.

Betterment. An addition made to, or change made in, a fixed or capital asset which is expected to prolong its life, expand its capacity, or increase its efficiency beyond initial design parameters and over and above that arising from maintenance, and the cost of which is therefore added to the book value of the asset. The term is sometimes applied to sidewalks, sewers, and highways, but it is preferable to designate these as "improvements". See also improvements.

Biochemical oxygen demand (BOD). The quantity of oxygen utilized in the biochemical oxidation of organic matter in a specifed time and at a specified temperature, usually at 5 days and 20°C.

Binary. Number system with only two digits - 0 and 1 - in which each symbol represents a decimal power of two. This is represented in a computer circuit by the presence of current (equivalent to "1") or its absence (equivalent to "0"). All computer programs are executed in binary form.

Bit. Short for binary dit, which is a single digit of information, 0 or 1, as used by a computer.

Bond. (1) A written promise to pay a specified sum of money, called the face value or principal amount, at a specified date or dates in the future, called the maturity date(s), together with periodic interest at a specified rate, payable periodically. The difference between a note and a bond is that the latter runs for a longer period of time and requires greater legal formality. (2) A warranty by an underwriting organization such as an insurance company guaranteeing honesty, performance or payment by contractor.

Bond anticipation notes. Short-term interest-bearing notes issued by a government in anticipation of bonds to be issued at a later date. The notes are retired from proceeds of the bond issue to which they are related.

Bond discount. The excess of the face value of a bond over the price for which it is acquired or sold. The price does not include accrued interest at the date of acquisition or sale.

Bond fund. A fund formerly used to account for the proceeds of general obligation bond issues. Such proceeds are now accounted for in a Capital Projects Fund.

Bond ordinance or resolution. An ordinance or resolution authorizing a bond issue.

Bond premium. The excess of the price at which a bond is acquired or sold over its face value. The price does not include accrued interest at the date of acquisition or sale.

Bonded debt. That portion of indebtedness represented by outstanding bonds. See also gross bonded debt and net bonded debt.

Bonded indebtedness. See bonded debt.

Bonds authorized and unissued. Bonds which have been legally authorized but not issued and which can be issued and sold without further authorization. This term must not be confused with the term "margin of borrowing power" or "legal debt margin," either one of which represents the difference between the legal debt limit of a government and the debt outstanding against it.

Bond issued. Bonds sold.

Bonds payable. The face value of bonds issued and unpaid.

Books. A collective term used to designate the system of accounting in general. A book may contain several accounts or one account may require several books.

Books of original entry. The record in which the various transactions are formally recorded for the first time, such as the cash journal, check register, or general journal. Where mechanized bookeeping methods are used, it may happen that one transaction is recorded simultaneously in several records, one of which may be regarded as the book of original entry. Memorandum books, check stubs, files of duplicate sales invoices, etc. whereon first or prior business notations may have been made, are not books of original entry in the accepted meaning of the term, unless they are also used as the media for direct posting to the ledgers.

Book value. Value as shown by books of account. In the case of assets which are subject to reduction by the valuation allowances, "book value" refers to cost or stated value less the appropriate allowance. Sometimes a distinction is made between "gross book value" and "net book value," the former designating value before deduction of related allowances and the latter after their deduction. In the absence of any modifier, however, the term "book value" is understood to be synonymous with "net book value."

Branch sewer or sub-main sewer. A sewer that receives wastewater from a relatively small area and discharges into a trunk sewer or main sewer.

Budget. A plan of financial operation embodying an estimate of proposed expenditures for a given period and the proposed means of financing them. Used without any modifier, the term usually indicates a financial plan for a single fiscal year. The term "budget" is used in two senses in practice. Sometimes it designates the financial plan presented to the appropriating body (utility) for adoption and sometimes the plan finally approved by that body. See also annual budget, capital budget, capital program, and long-term budget.

Budget document. The instrument used by the budget-making authority to present a comprehensive financial program to the appropriating body. The budget document usually consists of three parts. The first part contains a message from the budget-making authority, together with a summary of the proposed expenditures and the means of financing them. The second consists of schedules supporting the summary. These schedules show in detail the information as to past years' actual revenues, expenditures, and other data used in making the estimates. The third part is composed of drafts of the appropriation, revenue, and borrowing measures necessary to put the budget into effect.

Budget message. A general discussion of the proposed budget as presented in writing by the budget-making authority to the legislative body. The budget message should contain an explanation of the principal budget items, an outline of the government's experience during the past period and its financial status at the time of the message, and recommendations regarding the financial policy of the coming period.

Budgetary accounts. Accounts used to enter the formally adopted annual operating budget into the general ledger as part of the management control technique of formal budgetary integration.

Budgetary comparisons. Governmental GAAP financial reports must include comparisons of approved budgeted amounts with actual results of operations. Such reports should be subjected to an independent audit, so that all parties involved in the annual operating budget/legal appropriation process are provided with assurances that government monies are spent in accordance with the mutually agreed-upon budgetary plan.

Budgetary control. The control or management of a utility in accordance with an approved budget for the purpose of keeping expenditures within the limitations of available revenues.

Budgetary expenditures. Decreases in net current assets. In contrast to conventional expenditures, budgetary expenditures are limited in amount to exclude amounts represented by noncurrent liabilities. Due to their spending measurement focus, governmental fund types are concerned with the measurement of budgetary expenditures.

Buffer. A temporary area in a computer system for data, frequently used to hold data being passed between computers or other devices, such as printers, which operate at different speeds or different times.

Buildings. A fixed asset account reflecting the acquisition cost of permanent structures owned or held by a government and improvements thereon.

Byte. An 8-bit sequence of binary digits. Each byte corresponds to one character of data, representing a single letter, number or symbol. Bytes are the most common unit for measuring computer and disk storage capacity. See also kilobyte, megabyte.

Callable bond. A type of bond which permits the issuer to pay the obligation before the stated maturity date by giving notice of redemption in a manner specified in the bond contract. Synonym: Optional Bond.

Capital assets. See fixed assets.

Capital budget. A plan of proposed capital outlays and the means of financing them. See also capital program.

Capital expenditures. See capital outlays.

Capital grants. Grants which are restricted by the grantor for the acquisition and/or construction of fixed assets.

Capital improvement program. See capital program.

Capital outlays. Expenditures which result in the acquisition of or addition to fixed assets.

Capital program. A plan for capital expenditures to be incurred each year over a fixed period of years to meet capital needs arising from the long-term work program or otherwise. It sets forth each project or other contemplated expenditure in which the utility is to have a part and specifies the full resources estimated to be available to finance the projected expenditures.

Capital projects fund. A fund created to account for financial resources to be used for the acquisition or construction of major capital facilities (other than those financed by proprietary funds, special assessment funds, and trust funds).

Capital resources. Resources of a fixed of permanent character, such as land and buildings, which cannot ordinarily be used to meet current expenditures.

Cash. An asset account reflecting currency, coin, checks, postal and express money orders, and bankers' drafts on hand or on deposit with an official or agent designated as custodian of cash and bank deposits. All cash must be accounted for as a part of the fund to which it belongs. Any restrictions or limitations as to its availability must be indicated in the records and statements. It is not necessary, however, to have a separate bank account for each fund unless required by law.

Cash basis (accounting). When revenues are accounted for when received in cash, and expenditures are accounted for when paid, the system of accounting is said to be on the cash basis.

Cash basis (revenue requirement estimation). When the annual revenue requirement is determined as that amount necessary to make the cash outlays as they fall due. Incorporates costs for operations and maintenance; debt service; normal replacements, extensions, and improvements; and an allowance for a "rate of return" into the estimation of the cost of services.

Cash discount. An allowance received or given if payment is completed within a stated period of time. This term is not to be confused with "trade discount".

Cash with fiscal agent. An asset account reflecting deposits with fiscal agents, such as commercial banks, for the payment of matured bonds and interest.

Cathode-ray tube (CRT). A vacuum tube that generates and guides electrons onto a fluorescent screen to produce such images as characters or graphic displays on video display screens.

Cell. An electronic spreadsheet term that refers to the individual row/column where the user enters information. Cells are reference points on the spreadsheet.

Central processing unit (CPU). Electronic components in a computer that control the transfer of data and perform arithmetic and logic calculations.

Certificate of conformance in financial reporting program. A voluntary program administered by MFOA to encourage governments to publish efficiently organized and easily readable CAFRs (comprehensive annual financial report) and to provide peer recognition and technical assistance to the finance officers preparing them.

Certified public account. An accountant to whom a state has granted a certificate showing that he or she has met prescribed educational, experience, and examination requirements designed to insure competence in the practice of public accounting. The accountant holding such a certificate is permitted to use the designation Certified Public Accountant, commonly abbreviated CPA.

Change funds. Money on hand (not to be deposited) used in making change so that collections may be deposited in tact in the proper depository.

Character. A basis for distinguishing expenditures according to the periods they are presumed to benefit. See also character classification.

Character classification. Expenditure classification according to the time periods expenditures are presumed to benefit. The four groups are: (1) current operating expenditures, presumed to benefit the current fiscal period; (2) service, presumed to benefit prior fiscal periods primarily, but also present and future periods; and (3) capital outlays, presumed to benefit the current and future fiscal periods; and (4) intergovernmental, where one government transfers resources to another.

Charge, sewage. See rate, sewer.

Charges, fixed. Those carrying and operating costs of any business or project that continue to occur whether the business operates or produces anything or not. They usually include interest on the retirement of bonds and other borrowings, certain kinds of taxes and insurance, payments due under certain contracts, and in some cases may include all or a certain portion of the administrative overhead.

Chip. A piece of semiconductor material containing microscopic integrated circuits.

City equity. The net contribution in cash, property, or services to the accounting utility by the City in which it operates from the date the first expenditures were incurred to the date of the balance sheet. Synonym: Municipal Equity.

Classification of accounts. A list of accounts arranged in groups, each group referring to some particular phase of the financial operations of the enterprise and its financial operations of the enterprise and its financial condition. See also account number.

Clearing account. An account used to accumulate total charges or credits for the purpose of distributing them later among the accounts to which they are allocable or for the purpose of transferring the net differences to the proper account.

COBOL (Common Business-Oriented Language). A high-level computer programming language that is well-suited to business applications involving complex data records (such as personnel files or customer accounts) and large amounts of printed output.

Coding. A system of numbering or otherwise designating accounts, entries, invoices, vouchers, etc., in such a manner that the symbol used reveals quickly certain required information. To illustrate the coding of accounts, the number "200" might be assigned to expenditures made by the Department of Finance and the letter "A" might be used to designate expenditures for personal services. Expenditures for personal services in the Department of Finance would then be designated, for posting and other purposes, by the code "200-A". Other examples are the numbering of monthly recurring journal entries to indicate the month and nature of the entry and the numbering of invoices or vouchers so that the number reveals the date of entry. See also account number.

Collection system. The sewer lines and appurtenances used and useful in the collection and conveyance of wastewater. See also wastewater system.

Combination bond. A bond issued by a government which is payable from the revenues of a governmental enterprise but which is also backed by the full faith and credit of the government.

Combined sewer. A sewer designed and used to receive both surface runoff and wastewater.

Combined statements - overview. The five basic financial statements comprising the first of the financial reporting pyramid's three reporting levels containing GAAP basic financial statements. They include: (1) Combined Balance Sheet - All Fund Types and Account Groups; (2) Combined Statement of Revenues, Expenditures, and Changes in Fund Balances - All Governmental Fund Types; (3) Combined Statement of Revenues, Expenditures, and Changes in Fund Balances - Budget and Actual - General and Special Revenue Fund Types (and similar governmental fund types for which annual budgets have been legally adopted); (4) Combined Statement of Revenues, Expenses, and Changes in Retained Earnings (or Equity) - All Proprietary Fund Types; (5) Combined Statement of Changes in Financial Position - All Proprietary Fund Types; and (6) Notes to the Financial Statements. Trust Fund operations may be reported in (2), (4), and (5) above, as appropriate, or separately. The Combined Statements - Overview are also referred to as the "liftable" general purpose financial statements (GPFS).

Combining statements - by fund type. The second of the financial reporting pyramid's three reporting levels containing GAAP basic financial statements. Such statements are presented for each fund type for which the government maintains more than one fund. They include GAAP basic financial statements for each fund of a particular fund type in separate adjacent columns and a total column which duplicates the column for that fund type in the Combined Statements - Overview.

Command. A user instruction to the computer generally given through a keyboard, which can be a word, mnemonic, or character that causes a computer to perform a predefined operation.

Compatibility. (1) The ability of an instruction, program or component to be used on more than one computer. (2) The ability of computers to work with other computers that are not necessarily similar in design of capabilities.

Composite rate of depreciation. A single depreciation rate to be applied against the total depreciable assets to determine the depreciation for an accounting period. The use of a composite rate assumes that the depreciation expense thus arrived at is the same as would be obtained by applying proper individual rates of depreciation against the cost of each unit, and totaling the individual amounts.

Comprehensive annual financial report (CAFR). The official annual report of a government. It includes five Combined Statements - Overview (the "liftable" GPFS) and basic financial statements for each individual fund and account group prepared in conformity with GAAP and organized into a financial reporting pyramid. It also includes supporting schedules necessary to demonstrate compliance with finance-related legal and contractual provisions, extensive introductory material, and a detailed Statistical Section. Every government should prepare and publish a CAFR as a matter of public record.

Commitments. See encumbrances.

Configuration. The assortment of equipment (disks, diskettes, terminals, printers, etc.) in a particular computer system.

Construction. See construction in progress.

Construction contracts payable. A liability account reflecting amounts due on contracts for construction of buildings and other improvements.

Construction in progress. A fixed asset account reflecting the cost of construction work undertaken but not yet completed in that not ready for service at the date of balance sheet.

Consumer. See customer and user.

Consumption method. The method under which inventories are recorded as expenditures when used. See also purchase method.

Contingent assets. Assets that are not owned by the enterprise at present but that will be owned at a later date if a certain prescribed set of circumstances comes to pass or if certain acts are performed.

Contingent liabilities. Items which may become liabilities as a result of conditions undetermined at a given date, such as guarantees, pending law suits, judgments under appeal, unsettled disputed claims, unfilled purchase orders, and uncompleted contracts. All contingent liabilities should be disclosed within the basic financial statements, including the notes thereto. See liability reserves.

Contracts payable. A liability account reflecting amounts due on contracts for goods or services furnished to a government. Amounts withheld as guarantees on contracts should be shown separately in an account entitled Contracts Payable - Retained Percentage. See also accounts payable.

Contracts payable - retained percentage. A liability account reflecting amounts due on construction contracts which have been completed but on which part of the liability has not been paid pending final inspection or the lapse of a specified time period, or both. The unpaid amount is usually a stated percentage of the contract price.

Contribution from customers. An equity account in an enterprise fund which shows the amount of permanent fund capital contributed to the fund by its customers.

Contribution from government. An equity account in a proprietary fund which shows the amount of permanent fund capital contributed to the enterprise by the government from general government revenues and resources.

Contributions from subdividers. An equity account in an enterprise fund which shows the amount of permanent fund capital contributed by subdivision developers and builders.

Contributions in aid of construction. Cash or other assets contributed or donated to the accounting utility for the purpose of financing, wholly or in part, the extension of its facilities.

Control account. An account, usually kept in the general ledger, that receives the aggregate of the debit and of the credit postings to a number of identical, similar, or related accounts called subsidary accounts so that its balance equals the aggregate of the balances in these accounts. Note: This procedures serves as a check on the mathematical accuracy of the detail ledger account postings and frees the control ledger of a mass of detail.

Conventional expenditures. Decreases in net financial resources. In contrast to budgetary expenditures, conventional expenditures are not limited in amount to exclude amounts represented by noncurrent liabilities.

Core. The older type of non-volatile computer memory made of ferrite rings that represents binary data by switching the direction of polarity of magnetic cores. Most modern computers use integrated circuits, which are faster than core memory, but volatile.

Cost accounting. That method of accounting which provides for assembling and recording of all the elements of cost incurred to accomplish a purpose, to carry on an activity or operation, or to complete a unit of work or a specific job.

Cost ledger. A subsidiary record wherein each project, job production center, process, operation, product or service is given a separate account to which all items entering into its cost are posted in the required detail. Such accounts should be so arranged and kept that the results shown in them may be reconciled with and verified by a control account or accounts in the general books.

Cost of original. The actual cost of a property to the person first devoting it to utility service.

Cost of removal. The cost of demolishing, dismantling, tearing down or otherwise removing plant items, including the cost of transportation and handling incidental thereto.

Cost of replacement. The cost, actual or estimated, of duplication with a property of equal utility and desirability.

Cost of reproduction. The estimated cost of reproducing specific property new. Note: The difference between the Cost of Replacement and the Cost of Reproduction is that the former usually refers to the replacement of some unit or part of a unit in the plant, whereas the latter usually refers to the replacement of the entire plant.

Cost of service. The aggregate of the costs to the utility of furnishing service and to which it is entitled when recovering in the form of rates or service charges. The cost of service includes the following major elements: Expenses of maintenance and operation, depreciation, taxes and return on investment.

Cost records. All ledgers, supporting records, schedules, reports, invoices, vouchers, and other records and documents reflecting the cost of projects, jobs, production centers, processes, operations, products, or services, or the cost of any of the component parts thereof.

Cost unit. A term used in cost accounting to designate the unit of product or service whose cost is computed. These units are selected for the purpose of comparing the actual cost with a standard cost or with actual costs of units

produced under different circumstances or at different places and times. See also unit cost, work unit, standard cost.

Coupon rate. The interest rate specified on interest coupons attached to a bond. The term is synonymous with nominal interest rate.

Coverage. The ratio of net revenue available for debt service to the average annual debt service requirements of an issue of revenue bonds. See also net revenues available for debt service.

CP/M (Control Program for Microprocessors). An operating system used by many personal computers.

CPU. See central processing unit.

Credit. The acknowledgement, by entry on the right side of a double-entry account, of the reduction of a debt by a debtor or an obligation to a creditor. The opposite of debit.

CRT. See cathode-ray tube.

Current. A term which, applied to budgeting and accounting, designates the operations of the present fiscal period as opposed to past or future periods. It usually connotates items likely to be used up or converted into cash within one year.

Current assets. Those assets which are available or can be made readily available to finance current operations or to pay current liabilities. Those assets which will be used up or converted into cash within one year. Some examples are cash, temporary investments, and taxes receivable which will be collected within one year.

Current fund. See general fund.

Current liabilities. Liabilities which are payable within one year from the date of the balance sheet. See also floating debt.

Current resources. Resources to which recourse can be had to meet current obligations and expenditures. Examples are current assets, estimated revenues of a particular period not yet realized, transfers from other funds authorized but not received, and in the case of certain funds, bonds authorized and unissued.

Current special assessments. Special assessments levied and becoming due within one year.

Current taxes. Taxes levied and becoming due within one year.

Cursor. Symbol used to indicate where the next character to be input or output will be displayed on the computer's display screen (CRT).

Customer. The most generally accepted term for customer or user in water, gas, and electric utilities. The term user is favored for wastewater utilities as being more appropriate and having identification value. See also user.

Cycle system (of billing). A prearranged plan whereby the various operations of the user accounting department such as meter reading, billing, collecting, and posting are staggered over a definite period to distribute the work of the department evenly.

Data processing. (1) The preparation and handling of information and data from source media through prescribed procedures to obtain such end results as classification, problem solution, summarization, and reports. (2) Preparation and handling of financial information wholly or partially by mechanical or electronic means. See also electronic data processing (EDP).

Database. A collection of data or information (such as mailing lists or inventory). A database program helps to organize and manipulate collections of data.

Debit. An entry on the left side of an account kept by the double-entry method. The opposite of credit.

Debt. An obligation resulting from the borrowing of money or from the purchase of goods and services. Debts of governments include bonds, time warrants, notes, and floating debt. See also bond, note payable, floating debt, and long-term debt.

Debt limit. The maximum amount of gross or net debt which is legally permitted.

Debt service fund. A fund established to account for the accumulation of resources for, and the payment of general long-term debt principal and interest. Formerly called a sinking fund. See also fund, sinking.

Debt service fund requirements. The amounts of revenue which must be provided for a Debt Service Fund so that all principal and interest payments can be made in full on schedule.

Debt service requirement. The amount of money required to pay interest on outstanding debt, serial maturities of principal for serial bonds, and required contributions to accumulate monies for future retirement of term bonds.

Deferred charges (assets, debits). Expenditures which are not chargeable to the fiscal period in which made but are carried on the asset side of the balance sheet pending amortization or other disposition. An example is Discount on Bonds Issued. Deferred charges differ from prepaid expenses in that they usually extend over a long period of time (more than five years) and are not regularly recurring costs of operation. See also prepaid expenses.

Deferred credits (income). Credit balances or items which will be spread over following accounting periods either as additions to revenue or as reductions of expenses. Examples are taxes collected in advance and premiums on bonds issued.

Deferred expenses. See prepaid expenses.

Deferred liabilities. Liabilities not elsewhere provided for that are not current in nature and on which payment or other disposition is deferred to a future accounting period. An example is users' or customers' advances for construction.

Deferred revenues. Amounts for which asset recognition criteria have been met, but for which revenue recognition criteria have not been met. Under the modified accrual basis of accounting, such amounts are mesureable but not available.

Deferred serial bonds. Serial bonds in which the first installment does not fall due for two or more years from the date of issue.

Deferred special assessments. Special assessments which have been levied but which are not due within one year.

Deficiency. A general term indicating the amount by which anything falls short of some requirement or expectation. The term should not be used without qualification.

Deficit. (1) In a private utility, the deficit is the amount by which liabilities, reserves, and capital stock exceed its assets. (2) In a publicly owned utility, the deficit is the amount by which the liabilities, reserves, and equity exeed the assets. See also surplus.

Delinquent bills. Bills remaining unpaid on and after the date on which a penalty for nonpayment is attached.

Deposit. (1) Money placed with a banking or other institution or with a person either as a general deposit subject to check or as a special deposit made for some specified purpose. (2) Securities lodged with a banking or other institution or with a person for some particular purpose. (3) Sums deposited by customers for electric meters, water meters, etc., and by contractors and others to accompany and guarantee their bids.

Depreciation. (1) Expiration in the service value of fixed assets, other than wasting assets attributable to wear and tear, deterioration, action of the physical elements, inadequacy, obsolescence, and supression prior to elapse of useful life as, for instance, removal necessitated by street improvements. (2) The portion of the cost of a fixed asset other than a wasting asset which in some cases is charged as an expense during a particular period. In accounting for depreciation, the cost of a fixed asset, less any salvage value, is pro-rated over the estimated service life of such an asset, and each period is charged with a portion of such cost. Through this process, the entire cost of the asset is ultimately charged off as an expense.

Depreciation fund. Synonym: reserve for depreciation.

Depreciation method. The method used in the determination of depreciation that accrues during an accounting period or in the estimation of reserves to cover replacement costs. See also sinking-fund depreciation and straight-line average life depreciation.

Direct debt. The debt which a utility has incurred in its own name or assumed through the annexation of territory or consolidation with another utility. See also overlapping debt.

Direct expenses. Those expenses which can be charged directly as a part of the cost of a product or service, or of a department or operating unit, as distinguished from overhead and other indirect costs which must be prorated among several products or services, departments, or operating units.

Direct labor. Labor directly expended or applied in productive operations as distinguished from that not directly connected with a production process.

Direct materials. The cost of materials which become an integral part of a specific manufactured product or which are consumed in the performance of a specific service.

Direct net debt. Gross direct debt less debt that is self-supporting (revenue bonds) and double-barreled bonds (general obligation bonds secured by earmarked revenues which flow outside the general fund).

Disbursements. Payments in cash.

Discounts. Actual or contingent reductions in the price of services or materials that are first stated at some other and larger amount. See also cash discount and trade discount.

Disk. A rigid, flat, circular plate with a magnetic coating for storing data for a computer. Physical size and storage of disks can vary. See also floppy disk.

Disk drive. An electromechanical device into which a disk is inserted to read or write information.

Disk operating system (DOS). Computer software that controls the process of transmitting information to and from a disk. The disk operating system formats the disk and keeps track of where information is stored on it.

Display screen. A device that provides a visual representation of data; a TV-line screen. See also cathode-ray tube.

Distribution. The division of needed annual revenue requirements in a rate structure, that is, the unit charges to volume, to wastewater characteristics, to area, to front footage, or to property valuation.

District, assessment. The land or area created by statutory enactment within the boundaries of which the cost of an improvement is assessed for the benefits derived.

District, drainage. (1) An organization created and operating under statutory enactment for the purpose of financing, constructing, and operating a drainage system. (2) The land or area within the boundaries of a drainage district as delimited in the organizing statute.

District, sewer (water). (1) An organization created and operating under statutory enactment for the purpose of financing, constructing, and operating a wastewater system (water supply system). (2) The land or area within the boundaries of a sewer (water) district as delimited in the organizing statute. It may embrace parts of one or more political subdivisions.

Domestic wastewater. Wastewater discharged to the sewer system from residences and from commercial, institutional, recreational and similar facilities. Residential flow is usually estimated from the service area's population using an average daily per capita flow of sewage (approximately 100 gallons per day per capita). Also referred to as normal domestic sewage. See also wastewater.

Dot-matrix printer. A printer for computer that forms characters from a two-dimensional array of dots. More dots in a given space produce characters that are more legible.

Double entry. A system of bookeeping based on the fundamental theory that every business transaction has a twofold aspect; therefore, a complete record is obtained by entering the amounts to the debit of one or more accounts and to the credit of one or more other accounts. The double-entry system is contemplated in the current systems of utility accounting.

Due to construction fund. A liability account reflecting amounts received to finance construction, usually by a builder for water and sewer lines. These amounts include only short-term obligations on open account and not noncurrent portions of long-term loans.

Earned surplus. That part of surplus that has arisen out of earnings. The term is not limited to free surplus and may also include appropriated surplus. See also surplus, free surplus, and appropriated surplus.

Earnings. See income and revenue.

Easement. An acquired right to the use of land owned by others. Ordinarily more restricted in scope than a leasehold.

Effective interest rate. The rate of earning on a bond investment based on the actual price paid for the bond, the coupon rate, the maturity date, and the length of time between interest dates, in contrast with the nominal interest rate.

Electronic data processing (EDP). Data processing by means of high-speed electronic equipment. See also data processing.

Electronic spreadsheets. A computerized table that allows the user to perform forecasting and financial modeling functions quickly and efficiently.

Eminent domain. The power of a government to acquire private property for public purposes. It is frequently used to obtain real property which cannot be purchased from owners in a voluntary transaction. Where the power of eminent domain is exercised, owners are compensated by the government in an amount determined by the courts.

Encumbrances. Obligations in the form of purchase orders or contracts that reduce the balance of tha particular budget account to which they are chargeable. They cease to be encumbrances when paid or converted into a liability. Note: This use of the term should be distinguished from lien or mortgage, which refers to property.

Enterprise fund. A fund established to account for operations (a) that are financed and operated in a manner similar to private business enterprises - where the intent of the governing body is that the costs (expenses, including depreciation) of providing goods or services to the general public on a continuing basis be financed or recovered primarily through user charges; or (b) where the governing body has decided that periodic determination of revenues earned, expenses incurred, and/or net income is appropriate for capital maintenance, public policy, management control, accountability, or other purposes. Examples of Enterprise Funds are those for water, gas, and electric utilities; swimming pools; airports; parking garages; and transit systems.

Entity. The basic unit upon which accounting and/or financial reporting activities focus. The basic governmental legal and accounting entity is the individual fund and account group. Under NCGA Statement 1, governmental GAAP reporting entities include (1) the Combined Statements - Overview (the liftable GPFS) and (2) financial statements of individual funds (which may be presented as columns on Combining Statements - By Fund Type, on physically separate individual fund statements, or both). The term "entity" is also sometimes used to describe the composition of "the government as a whole" (whether the library is part of the city of a separate government, whether the school system is part of the county or an independent special district, etc.).

Entry. (1) The record of a financial transaction in its appropriate book of account. (2) The act of recording a transaction in the books of account.

Equipment. See machinery and equipment.

Estimated uncollectible accounts. See allowance for uncollectibles.

Exhibits. The accounts, statements, and other papers that accompany and are a part of a financial report. Sometimes the term is used only for the balance sheet or other principal statements. See also schedules.

Expenditures. Decreases in net financial resources. Expenditures include current operating expenses which require the current or future use of net current assets, debt service, and capital outlays. See also budgetary expenditures and conventional expenditures.

Expenses. Decreases in net total assets. Expenses represent the total cost of operations during a period regardless of the timing of related expenditures.

Extraneous flows. Wastewater flow component in sewer lines that is in addition to normal domestic and industrial flows. See also infiltration/inflow.

Face value. As applied to securities, this term designates the amount of liability stated in the security document.

Fiduciary. One who acts in a position of a trust, a trustee.

File. A collection of logically related records or data treated as a single item. A file is the means by which data is stored on a disk or diskette so it can be used at a later date.

Filename. The sequence of alphanumeric characters assigned by a user to identify a file which can be read by both the computer and user.

Financial adviser. A person or a business rendering a service of advise in the marketing of bonds who may prepare a prospectus to canvass for bids on sale of bonds.

Financial reporting pyramid. NCGA Statement 1 organization plan for the Financial Section of the CAFR. The pyramid presents GAAP basic financial statements on three distinct and progressively more detailed reporting levels: (1) Combined Statements - Overview (the "liftable" GPFS): (2) Combining Statements - By Fund Type: and (where necessary or appropriate) (3) individual fund statements.

Financial statements. See basic financial statements.

Fiscal agent. A financial representative such as a trust company serving a corporation.

Fiscal period. Any period at the end of which an enterprise closes its books to determine its financial condition and the results of its operations, commonly one year, though not necessarily a calendar year. See also accounting period.

Fixed assets. Assets of a more or less permanent character or intended for long-time use that are employed in the operation of the utility. Fixed assets may either be tangible or intangible. See also tangible fixed assets and intangible fixed assets.

Fixed capital. The investment represented by fixed assets.

Fixed charge. A charge that cannot be escaped, shifted, or altered, as interest, rental, taxes and amortization.

Fixed liabilities. Liabilities that are to paid one year or more after the date of the balance sheet. See also bonded debt.

Fixtures. Attachments to buildings which are not intended to be removed and which cannot be removed without damage to the buildings. Those fixtures with a useful life presumed to be as long as that of the building itself are considered a part of the building; all others are classified as equipment.

Floating debt. Liabilities other than bonded debt and time warrants which are payable on demand or at an early date. Examples are accounts payable, notes, and bank loans.

Floppy disk. A flexible disk, made of mylar and coated with a magnetic oxide, used for storing and retrieving computer data. Sometimes called a floppy diskette.

Force account. A method employed in the construction and/or maintenance of fixed assets whereby a utility's own personnel are used instead of an outside contractor. This method also calls for the purchase of materials by the utility and the possible use of its own equipment, but the distinguishing characteristic of the force account method is the use of the utility's own personnel.

Forfeiture. The automatic loss of cash or other property as a punishment for not complying with legal provisions and as compensation for the resulting damages or losses. This term should not be confused with confiscation. The latter term designates tha actual taking over of the forfeited property by the government. Even after property has been forfeited, it cannot be said to be confiscated until the government claims it.

Formal budgetary integration. The management control technique through which the annual operating budget is recorded in the general ledger through the use of budgetary accounts. It is intended to facilitate control over revenues and expenditures during the year.

Format. The arrangement by which information is stored on a computer floppy disk in tracks and sectors.

FORTRAN (Formula Translation). A widely used high-level computer programming language well-suited to problems that can be expressed in terms of algebraic formulas. It is generally used in scientific applications.

Franchise. A special privilege granted by a government permitting the continuing use of public property, such as city streets, and usually involving the elements of monopoly and regulation.

Free surplus. The portion of surplus that has not been appropriated for any particular purpose.

Full faith and credit. A pledge of the general taxing power for the payment of debt obligations. Bonds carrying such pledges are referred to as general obligation bonds or full faith and credit bonds. See also general obligation bonds.

Function. A group of related activities aimed at accomplishing a major service or regulatory program for which the utility is responsible. For example, public health is a function. See also subfunction.

Functional classification. Expenditure classification according to the principal purposes for which expenditures are made. Examples are public safety, public health, public welfare, etc.

Fund. A fiscal and accounting entity with a self-balancing set of accounts recording cash and other financial resources, together with all related liabilities and residual equities or balances, and charges therein, which are segregated for the purpose of carrying on specific activities or

attaining certain objectives in accordance with special regulations, restrictions or limitations.

Fund accounts. All accounts necessary to set forth the financial position and results of operations of a fund.

Fund balance. The fund equity of governmental funds and trust funds.

Funded debt. Same as bonded debt, which is the preferred term.

Funded deficit. A deficit eliminated through the sale of bonds issued for that purpose. See also funding bonds.

Fund, sinking. A fund consisting of such items as cash, credits, securities created by adding thereto at regular intervals of time such equal sums that the sinking fund will, with such interest as accrues to it, contain a predetermined amount at any one or more designated dates in the future, possibility for the retirement of term Bonds or other bonds specified to be retired from a sinking fund. See also debt service fund.

Funding. The conversion of floating debt or time warrants into bonded debt.

Funding bonds. Bonds issued to retire outstanding floating debt and to eliminate deficits.

GAAP. See generally accepted accounting principles.

GAAS. See generally accepted auditing standards.

General expenses. A class of expense accounts grouped together for the purpose of the income statement. They represent costs incurred in the operation of the enterprise that are not otherwise classified and are not directly connected with productive operations. These expenses are sometimes referred to as general and administrative expenses. Examples are salaries of general officers and executives and general office expenses.

General fixed assets. Fixed assets used in operations accounted for in governmental funds. General fixed assets include all fixed assets not accounted for in proprietary funds or in trust and agency funds.

General fixed assets account group. A self balancing group of accounts set up to account for the general fixed assets of a government.

General fund. The fund used to account for all financial resources except those required to be accounted for in another fund.

General journal. A book of original entry in which entries not recordable in special journals are made.

General ledger. A book, file or other device which contains the accounts needed to reflect the financial position and the results of operations of an entity. In double entry bookeeping, the debits and credits in the general ledger are equal. Therefore, the debit balances equal the credit balances. See also subsidiary ledger, control account, and subsidiary account.

Generally accepted accounting principles (GAAP). Uniform minimum standards of, and guidelines to, financial accounting and reporting. They govern the form and content of the basic financial statements of an entity. GAAP encompass the conventions, rules and procedures necessary to define accepted accounting practice at a particular time. They include not only broad guidelines of general application, but also detailed practices and procedures. GAAP provide a standard by which to measure financial presentations. The primary authoritative statement on the application of GAAP to state and local governments is NCGA Statement 1. Every government should prepare and publish financial statements in conformity with GAAP. The objectives of governmental GAAP financial reports are different from and much broader than, the objectives of business enterprise GAAP financial reports.

Generally accepted auditing standards (GAAS). Measures of the quality of the performance of auditing procedures and the objectives to be attained through their use. They are concerned with the auditor's professional qualities and with the judgment exercised in the performance of an audit. Generally accepted auditing standards have been prescribed by (1) the American Institute of Certified Public Accounts (AICPA) and (2) the U.S. General Accounting Office (GAO) in Standards for Audit of Governmental Organizations, Programs, Activities, and Functions (the "yellow book").

General obligation bonds. Bonds for the payment of which the full faith and credit of the issuing government are pledged.

General purpose financial statements (GPFS). Those basic financial statements which comprise the minimum acceptable fair presentation in conformity with GAAP. As such, they constitute the minimum acceptable scope of independent annual GAAP audits. Under 1968 GAAFR, the GPFS included financial statements for each individual fund and account group maintained by a government. In Statement 1, the NCGA redefined governmental GPFS to consist of financial statements for each of the eight fund types in use and for both account groups presented in separate adjacent columns on the financial reporting pyramid's five Combined Statements - Overview. See also basic financial statements, combined statements - overview.

General revenue. The revenues of a utility other than those derived from and retained in an enterprise. If a portion of the net income in an enterprise fund is contributed to another nonenterprise fund, such as the general fund, the amounts transferred constitute general revenue of the government.

Governmental accounting. The composite activity of analyzing, recording, summarizing, reporting, and interpreting the financial transactions of the governments.

GPFS. See general purpose financial statements.

Grants. Contributions or gifts of cash or other assets from another government to be used or expended for a specified purpose, activity, or facility. See also capital grants and operating grants.

Gross bonded debt. The total amount of direct debt of a utility represented by outstanding bonds before deduction of any assets available and earmarked for their retirement (general obligation bonds plus revenue bonds). Also referred to as gross direct debt.

Gross income. Utility operating income plus the total of other income during an accounting period.

Gross revenues. Revenues arising directly from utility operations. The terms revenue and income are not synonomous.

Group plan. A plan used in accounting for depreciation whereby a composite rate of depreciation is applied to a group of assets involved in some operating phase of the enterprise.

Hard disk. A metal disk with magnetic coating used to store information for quick access by the computer system. Hard disks can run at much higher speeds than floppy disks and are capable of storing much more information.

Hardware. The physical equipment that makes up a computer system.

Household. A household consists of all the persons who occupy a housing unit. A house, an apartment or other group of rooms, or a single room, is regarded as a housing unit, when it is occupied or intended for occupancy as separate living quarters. A household includes the related family members and all the unrelated persons, if any, such as ledgers, foster children, wards, or employees who share the housing unit. A person living alone in a housing unit, or a group of unrelated persons sharing a housing unit as partners, is also counted as a household.

Imprest account. An account into which a fixed amount of money is placed for the purpose of minor disbursements. As disbursements are made, a voucher is completed to record their date, amount, nature, and purpose. At periodic intervals, or when the money is completely expended, a report with substantiating vouchers is prepared and the account is replenished for the exact amount of the disbursements, and appropriate general ledger accounts are charged. The total of cash plus substantiating vouchers must at all times equal the total fixed amount of money set aside in the imprest account. See also petty cash.

Improvements. Buildings, other structures, and other attachments or annexations to land which are intended to remain so attached or annexed, such as sidewalks, trees, drives, tunnels, drains, and sewers. Sidewalks, curbing, sewers, and highways are sometimes referred to as "betterments", but the term "improvements" is preferred.

Improvements other than buildings. A fixed asset account which reflects acquisition value of permanent improvements other than buildings, which add value to land. Examples of such improvements are fences, retaining walls, sidewalks, pavements, gutters, tunnels, and bridges.

Income. All receipts arising from utility operation as distinguished from revenue that ordinarily represents the receipts that arise from the rendering of a particular utility service, as for instance, from charges for sewer service.

Income account. An account that is used to show the results of operation for a certain period and how these results were obtained.

Income deductions. An item of expense, the payment of which has been authorized to be made from income inclusive of revenues.

Income statement. A statement setting forth the revenues earned, the expenses incurred, and the excess of deficiency of revenue as compared with expense. Synonyms: Profit and Loss Statement, Income and Expense Statement.

Indirect charges. See overhead.

Indirect labor. Labor that cannot be identified with the specific furtherance of any construction, operation, or productive process but nevertheless does further general operations.

Individual fund statements. The third of the financial reporting pyramid's three reporting levels containing GAAP basic financial statements. Such statements should be presented only when necessary or appropriate. Governments should not present physically separate individual fund financial statements which simply repeat information already presented in columns on the Combined Statements - Overview or Combining Statements - By Fund Type. Under Statement 1, physically separate individual fund statement formats are normally used only: (1) to present required individual fund budgetary comparisons; (2) to present prior-year comparative data; or (3) to present more detailed information than is presented for a fund on one of the higher levels of the financial reporting pyramid.

Input. Data to be accepted by the computer. An input device allows instructions and data to be given to the computer.

Intangible fixed assets. Nonphysical fixed assets, such as patents and franchises.

Intercepting sewer (interceptor): A sewer that receives dry weather flow, frequently added quantities of stormwater from a number of transverse sewers or outlets, and usually additional predetermined quantities of stormwater, and conducts such waters to a point for treatment or disposal.

Interfund accounts. Accounts in which transfers between funds are reflected. See interfund transactions.

Interfund loans. Loans made by one fund to another.

Interfund transactions. Transactions between funds of the same utility. They include: (1) Quasiexternal Transactions; (2) Reimbursements; (3) Residual Equity Transfers; and (4) Operating Transfers.

Interim financial statement. A financial statement prepared before the end of the current fiscal year and covering only fiscal transactions during the current year to date.

Internal check. An accounting method or procedure so designed that the work of one employee is complementary to that of another, thus providing a continuous audit on the accuracy of accounting work.

Internal control. A plan of organization under which employees' duties are so arranged and records and procedures so designed as to make it possible to exercise effective accounting control over assets, liabilities, revenues, and expenditures. Under such a system, the work of employees is subdivided so that no single employee performs a complete cycle of operations. Thus, for example, an employee handling cash would not post the accounts receivable records. Moreover, under such a system, the procedures to be followed are definitely laid down and require proper authorizations as designated officials for all actions to be taken.

Internal service fund. A fund used to account for the financing of goods or services provided by one department or agency to other departments or agencies of a utility, or to other utilities, on a cost-reimbursement basis.

Inventory. A detailed list showing quantities, descriptions, and values of property. It may also include units of measure and unit prices. The term is often confined to consumable materials but may also cover fixed assets. When an inventory covers all property of the enterprise and is priced as of a certain date, it is known as an appraisal.

Inventory appraisal. A detailed list of the individual items comprising an assembled property either with or without unit costs or prices applied thereto.

Investment banker. A brokerage firm purchasing or "underwriting" an entire issue of bonds for resale on a more or less retail basis.

Investments. Securities and real estate held for the production of revenues in the form of interest, dividends, rentals, or lease payments. The term does not include fixed assets used in the utilities operations.

Investments in default. Bonds, notes, mortgages, or other instruments on which there exists a default in the payment of principal or interest.

Job account. An account pertaining either to an operation which occurs regularly (a "standing order") or to a specific piece of work (a "job order"), showing all charges for material and labor used and other costs incurred, together with any allowances or other credits.

Journal. A book of original entry in which a record is first made and in which explicit or implied directions are given for posting to specific accounts the financial information involved in a transaction. See also general journal, special journal, and register.

Journal voucher. A voucher provided for the recording of certain transactions or information in place of or supplementary to the journals or registers. The journal voucher usually contains an entry or entries, explanations, references to documentary evidence supporting the entry or entries, and the signature or initials of one or more properly authorized officials.

Kilobyte (K). Informally, 1000 bytes of information. Actually, 1 K bytes consist of 1024 bytes of information. (All totals given in K bytes should be multiplied by 1024 to get the exact number of bytes stored.) Disk storage is usually rated in terms of K bytes of information. See also byte and megabyte.

Land. A fixed asset account which reflects the cost of land owned that is used and useful and rights to use land not owned. Included under this term are land sites, rights of way, easements, and leaseholds.

Land, assessable. Any land located within the boundaries of an irrigation, drainage, sewerage, or district of similar character that is subject to assessment to defray the cost of constructing improvements in the district. Such lands usually include all those within the district boundaries except those specifically exempted by statute, the latter class generally including district rights of way and other property, and property publicly owned for public uses.

Land rights. Rights or obligations in connection with the occupation of, or ownership in, land. See also easement, leaseholds, and rights of way.

Language. The set of instructions by which the computer is able to do work. Software programs are written in a particular high level language (such as BASIC or COBOL) with commands that resemble English. High level languages are translated into machine language by the computer.

Lateral sewer. A sewer that discharges into a branch or other sewer and has no other common sewer tributary to it.

Leasehold. The right to the use of real estate by virtue of a lease, usually for a specified term of years, for which consideration is paid, as distinguished from the ownership in the land.

Lease-purchase agreements. Contractual agreements which are termed "leases," but which in substance amount to purchase contracts.

Ledger. A group of accounts in which are recorded the financial transactions of an entity under separate account titles. See also general ledger and subsidiary ledger.

Legal debt limit. See debt limit.

Levy. (Verb) To impose taxes, special assessments, or service charges for the support of governmental activities. (Noun) The total amount of taxes, special assessments, or service charges imposed by a government.

Liabilities. Debt or other legal obligations arising out of transactions in the past which must be liquidated, renewed, or refunded at some future date. This term does not include encumbrances in as confined to items payable, but not necessarily due.

Liability reserves. Liabilities that represent merely an estimate of the amount because of lack of invoices or other sources of information. Note: The difference between a liability reserve and a contingent liability is

that the former represents a definite liability, the approximate amount of which is known; the latter consists of items that may become liabilities as a result of conditions undetermined at the date of the balance sheet.

Life, service. The period of time between the date when a physical unit of property was first put into service new as a part of the property and the date when it was retired or is anticipated to be retired from service. If depreciation is accounted for on a production basis rather than a time basis, then service life should be measured in terms of the appropriate unit of production. The service life of equipment will vary depending upon levels of expenditure for maintenance.

Life, useful. The life of an asset that is influenced by obsolescence or a myriad of economic factors.

"Liftable" general purpose financial statements (GPFS). NCGA Statement 1's GPFS are designed to be "liftable" from the Financial Section of the comprehensive annual financial report (CAFR) for inclusion in official statements for securities offerings or for widespread distribution, along with an independent auditor's opinion, to users requiring less detailed information than is contained in the full CAFR. In order to be "liftable," the GPFS must include all disclosures necessary for their fair presentation in conformity with GAAP including certain specified disclosures related to individual funds. See also general purpose financial statements.

Limited-term investment. An investment that will mature within one year from date of the balance sheet as opposed to long-term investment that implies maturity after more than one year.

Loans receivable. An asset account reflecting amounts which have been loaned to individuals or organizations external to a utility, including notes taken as security for such loans.

Long-term budget. A budget prepared for a period longer than a fiscal year; or, in the case of some state governments, a budget prepared for a period longer than a biennium. Long-term budgets concerned with capital outlay plans and capital improvement programs are referred to as capital budgets.

Long-term debt. Debt that is payable (mature) during some future accounting period, i.e., more than one year from the date of issuance.

Machine language. The only language the computer understands without first translating what was input. All high level languages (such as BASIC or COBOL) are translated by the computer into machine language before processing.

Machinery and equipment. Tangible property of a more or less permanent nature, other than land or buildings and improvements thereon. Examples are external piping, pumps, machinery, tools, trucks, cars, furniture, and wiring. Mechanical and electrical apparatus generally comprise approximately 30-40% of treatment plants and lesser percentages of conveyance networks (lift and pump stations, etc.)

Magnetic tape (Magtape). Magnetic tape used as a mass storage media and packaged on reels. The data stored on magnetic tape can only be accessed serially. It is often used as a back up device on larger computer systems.

Maintenance. The upkeep necessary for efficient operation of physical properties. It involves labor and materials but is not to be confused with replacement or retirement. It includes repetitive and preventative programs and major and minor repairs. "Minor repairs" include the addition of new bearings, seals, valves, and "parts" that are occasionally necessary to maintain equipment to perform its designed function. On the other hand, "major repairs," those which materially increase the useful life of the equipment component and the cost of which is significant in relation to the value of the component, may be considered to replace the function of that component in comparison with its original service life. Prudent judgment is required from an accounting standpoint to judge whether an expenditure is a minor repair charged to a maintenance account or a major repair which may be charged, in whole or part, to a replacement account.

Matured bonds payable. A liability account reflecting unpaid bonds which have reached or passed their maturity date.

Matured interest payable. A liability account reflecting unpaid interest on bonds which have reached or passed their maturity date.

Median income. The median income is the amount which divides the distribution into two equal groups, one having incomes above the median, and the other having incomes below the median.

Megabyte (M). 1 million bytes of information. See also byte.

Memory. (1) The main high-speed storage area in a computer where instructions for a program being run are temporarily kept. (2) A device in which data can be stored and from which it can later be retrieved.

Menu. A computer displayed list of options from which the user selects an action to be performed by typing a letter or positioning the cursor.

Menu-driven. A computer system that primarily uses menus for its user interface rather than a command language.

Meter reading. Securing and recording information with reference to the consumption of water by each customer. The term may include other activities such as the meter testing and the investigation of unusual consumption. Note: The sewer utility is involved only to the extent that metered water consumption is used as a guide in the distribution of the costs or service and to the extent that is assumes the cost of meter reading.

Minifloppy disk. a 5¼-inch floppy disk. This size is often called minifloppy to distinguish it from 8-inch floppy disks.

Microcomputer. A computer which is physically very small - it can fit on or under a desk - and which is based on large-scale integration (LSI) circuitry. It is usually the least expensive of the computer types.

Microfloppy disk. a 3-inch to 3½-inch floppy disk enclosed in a plastic cartridge. This size is called microfloppy to distinguish it from 5¼-inch minifloppy disks.

Microprocessor. A single-chip central processing unit incorporating LSI technology.

Minicomputer. A type of computer whose physical size is usually smaller than a mainframe. In general, its performance exceeds that of a microcomputer. Since minicomputers are more modular than mainframes, they can be configured to provide better price/performance systems.

Modem. An interface device that enables a computer to communicate information over telephone lines.

Modified accrual basis. The accrual basis of accounting under which revenues are recognized when they become both "measurable" and "available to finance expenditures of the current period." Expenditures are recognized when the related fund liability is incurred except for: (1) inventories of materials and supplies which may be considered expenditures either when purchased or when used; (2) prepaid insurance and similar items which need not be reported; (3) accumulated unpaid vacation, sick pay, and other employee benefit amounts which need not be recognized in the current period, but for which larger-than-normal accumulations must be disclosed in the notes to the financial statements; (4) interest on special assessment indebtedness which may be recorded when due rather than accrued, if approximately offset by interest earnings on special assessment levies; and (5) principal and interest on long-term debt which are generally recognized when due. All governmental funds and Expendable Trust Funds are accounted for using the modified accrual basis of accounting.

Monitor. The display screen or CRT.

Mortgage bonds. Bonds secured by a mortgage against specified properties of a utility. If primarily payable from enterprise revenues, they are also classed as revenue bonds.

Municipal. In its broadest sense, an adjective which denotes the state and all subordinate units of government. In a more restricted sense, an adjective which denotes a city or village as opposed to other local governments.

Municipal bond. A bond issued by a state or local government.

Municipal corporation. A body politic and corporate established pursuant to state authorization for the purpose of providing governmental services and regulations for its inhabitants. A municipal corporation has defined boundaries and a population, and is usually organized with the consent of its residents. It usually has a seal and may sue and be sued. Cities and villages are examples of municipal corporations. See also quasi-municipal corporations.

Municipal improvement certificates. Certificates issued in lieu of bonds for the financing of special improvements. As a rule, these certificates are placed in the contractor's hands for collection from the special assessment payers.

Net bonded debt. Gross bonded debt less any cash or other assets available and earmarked for its retirement.

Net income. Proprietary fund excess of operating revenues, nonoperating revenues, and operating transfers-in over operating expenses, nonoperating expenses, and operating transfers-out.

Net profit. See net income.

Net revenues. See net income.

Net revenues available for debt service. Proprietary fund gross operating revenues less operating and maintenance expenses but exclusive of depreciation and bond interest. "Net revenue available for debt service" as thus defined is used to compute "coverage" on revenue bond issues. See also coverage. Under the laws of some states and the provisions of some revenue bond indentures, "net revenues available for debt service" for computation of revenue bond coverage must be computed on a cash basis rather than in conformity with GAAP.

Net worth. The residual equity of the owners of any enterprise. In a private utility, capital stock, capital surplus, and earned surplus are items constituting net worth. In a publicly owned utility, net worth consists of earned surplus but may also include city equity if the city's contributions are considered permanent.

Nominal interest rate. The contractual interest rate shown on the face and in the body of a bond and representing the amount of interest to be paid, in contrast to the effective interest rate. See also coupon rate.

Nonoperating expenses. Proprietary fund expenses which are not directly related to the fund's primary service activities, such as the furnishing of wastewater service.

Nonoperating income. Income derived from activities other than those directly connected with the furnishing of utility service. See also nonoperating revenues.

Nonoperating properties. Properties owned by the accounting utility but not actually used and useful nor intended to be used in the furnishing of utility service.

Nonoperating revenues. Proprietary fund revenues which are incidental to, by-products of, the fund's primary service activities.

Nonvolatile memory. Memory that does not lose its contents when a computer's processor's power supply is shut off or disrupted.

Note payable. In general, an unconditional written promise signed by the maker to pay a certain sum in money on demand or at a fixed or determinable time either to the bearer or to the order of a person designated therein.

Note receivable. An unconditional written promise, signed by the maker, to pay a certain sum in money on demand or at a fixed or determinable future time to the accounting utility, either directly or by endorsement.

Notes to the financial statements. The summary of significant accounting policies and other disclosures required for a fair presentation of the basic financial statements of an entity in conformity with GAAP which are not included on the face of the basic financial statements themselves. The notes to the financial statements are an integral part of the basic financial statements.

Object. As used in expenditure classification (object class), this term applies to the article purchased or the service obtained (as distinguished from the results obtained from expenditures). Examples are personal services, contractual services, materials, supplies, and equipment. See also activity, character and function.

Object of expenditure. See object.

Obligations. Amounts which a utility may be required legally to meet out of its resources. They include not only actual liabilities, but also unliquidated encumbrances.

Obsolescence. The decrease in the value of assets resulting from economic, social, technical, or legal changes. This is an element of depreciation.

Official statement. A legal document which summarizes all the salient features of the underlying documents and agreements which support a municipal bond offering. It is considered the disclosure document which presents information that is "material" to the offering. The official statement should contain what a reasonable investor would need to know in making a decision about the issue. Thus this document will usually include a description of the issuer, a description of the purpose of the project being financed, a description of the security of the bond, a summary of the principal financing documents, any feasibility studies which relate to the security, and any other "key information".

Operating budget. Plans of current expenditures and the proposed means of financing them. The annual operating budget (or in the case of some state governments, the biennial operating budget) is the primary means by which most of the financing acquisition, spending, and service delivery activities of a government are controlled. The use of annual operating budgets is usually required by law. Even where not required by law, however, annual operating budgets are essential to sound financial management and should be adopted by every government. See also budget.

Operating expenses. Proprietary fund expenses necessary to the maintenance of the enterprise, to the rendering of service for which operated, and to the collection of revenue. Note: Some utility commissions interpret the term "operating expenses" in a narrow sense so as to exclude depreciation taxes, and property losses chargeable to operations and require that each of these be classified independently as an operating revenue deduction. In examining or preparing an income statement, the sense in which the term is used must be kept in mind.

Operating grants. Grants which are restricted by the grantor to operating purposes or which may be used for either capital or operating purposes at the discretion of the grantee.

Operating income. The excess of proprietary fund operating revenues over operating expenses.

Operating municipality. The city or municipality that owns the utility and operates it directly through the governing body or indirectly through an appointed board or otherwise.

Operating revenues. Proprietary fund revenues which are directly related to the fund's primary service activities. They consist primarily of user charges for services.

Operating statement. The basic financial statement which discloses the financial results of operations of an entity during an accounting period in conformity with GAAP. Under NCGA Statement 1, operating statements and statements of changes in fund equity are combined into "all-inclusive" operating statement formats.

Operating system. In reference to computers, it is the software (such as CP/M) which controls the operation of the computer and its peripherals. The operating system enables the users and hardware devices to communicate with the computer and its peripherals and use its resources.

Operating transfers. All Interfund Transfers other than Residual Equity Transfers, e.g., legally authorized transfers from a fund receiving revenue to the fund through which the resources are to be expended, transfers of tax revenues from a Special Revenue Fund to a Debt Service Fund, transfers from the General Fund to a Special Revenue or Capital Projects Fund, operating subsidiary transfers from the General or a Special Revenue Fund to an Enterprise Fund, and transfers from an Enterprise Fund other than payments in lieu of taxes to finance General Fund expenditures.

Operation, maintenance and replacement costs. (OM&R) Annual costs (exclusive of capital costs and debt service requirements) incurred by a POTW in providing wastewater collection and/or treatment services. Line items include, but are not limited to, salaries, indirect salary costs, chemicals, power, building utilities, building and ground maintenance, transportation equipment, employee training, travel, publications, sewer maintenance, office equipment and supplies, insurance, contractual services and rentals, and routine replacement of equipment. Cost components include, but are not limited to, treatment, conveyance, collection, and administrative. Sometimes OM&R costs are jointly referred to as operating expenses. See also administrative costs and replacement cost.

Optional bond. See callable bond.

Order. A formal legislative enactment by the governing board of certain local governments which has the full force and effect of law. For example, county governing boards in some states pass "orders" rather than laws or ordinances.

Ordinance. A formal legislative enactment by the governing board of a municipality. If it is not in conflict with any higher form of law, such as a state statute or constitutional provision, it has the full force and effect of law within the boundaries of the municipality to which it applies. The difference between an ordinance and a resolution is that the latter requires less legal formality and has a lower legal status. Ordinarily, the statutes or charter will specify or imply those legislative actions which must be by ordinance and those which may be by resolution. Revenue raising measures, such as the imposition of taxes, special assessments and service charges, universally require ordinances. See also resolution.

Organization expense. The incidental costs of organizing the utility. Examples are fees and expenses of incorporation and office expenses incident to organizing the utility.

Outfall sewer. A sewer that receives the wastewater from a collecting system and carries it to a point of final discharge. As usually used herein, the term relates to the sewer conveying plant effluents to a point of final discharge.

Outlays. Synonymous with Expenditures. See also capital outlays.

Output. The information reported or generated by a computer. An output device (such as a printer or CRT) enables the computer to report the results of a program operation.

Overall net debt. This is the sum of direct net debt and overlapping debt.

Overdraft. (1) The amount of which checks, drafts, or other demands for payment on the treasury or on a bank exceed the amount of the credit against which they are drawn. (2) The amount by which requisitions, purchase orders, or audited vouchers exceed the appropriation or other credit to which they are chargeable.

Overhead. Those elements of cost necessary to produce an article or to perform a service of such nature that the amount applicable to each unit of product or service cannot be determined readily or accurately and are thus usually allocated on some arbitrary basis. Normally, they relate to those objects of expenditure that do not become an integral part of the finished product or service such as rent, heat, light, supplies, management, and supervision.

Overlapping debt. The proportionate share of the debts of local governments located wholly or in part within the limits of the reporting government which must be borne by property within each government. Except for special assessment debt, the amount of debt of each unit applicable to the reporting unit is arrived at by (1) determining what percentage of the total assessed value of the overlapping jurisdiction lies within the limits of the reporting unit, and (2) applying this percentage to the total debt of the overlapping jurisdiction. Special assessment debt is allocated on the basis of the ratio of assessments receivable in each jurisdiction which will be used wholly or in part to pay off the debt to total assessments receivable which will be used wholly or in part for this purpose.

Pay-as-you-go basis. (1) A term used to describe the financial policy of a utility which finances all of its capital outlays from current revenues rather than by borrowing. A utility which pays for some improvements from current revenues and others by borrowing is said to be on a partial or modified pay-as-you-go basis. (2) Failure to finance retirement obligations on a current basis.

Penalties. Amounts added to users' bills if not paid by a certain date.

Pension trust fund. A Trust Fund used to account for public employee retirement systems. Pension Trust Funds are accounted for in essentially the same manner as proprietary funds, but with an important expanded emphasis on required fund balance reserves.

Performance budget. A budget wherein expenditures are based primarily upon measurable performance of activities and work programs. A performance budget may also incorporate other bases of expenditure classification, such as character and object class, but these are given a subordinate status to activity performance.

Peripheral. A device that is external to the computer'sCPU and main memory, e.g., printer, modem, or terminal, but connected to it by appropriate electrical connections.

Perpetual inventory. A system whereby the inventory of units of property at any date may be obtained directly from the records without resorting to an actual physical count. A record is provided for each item or group of items to be inventoried and is so divided as to provide a running record of goods ordered, received, and withdrawn, and the balance on hand, in units and frequently also in value.

Petty cash. A sum of money set aside on an imprest basis for the purpose of making change or paying small obligations for which the issuance of a formal voucher and check would be too expensive and time-consuming. Petty cash accounts are sometimes referred to as petty cash "funds". However, they are not "funds" in the sense of governmental accounting's eight fund types. Petty cash accounts should be reported as assets of the fund of ownership. See also imprest account.

Petty cash voucher. A voucher used to record individual disbursements of petty cash. See also imprest account.

Posting. The act of transferring to an account in a ledger the data, either detailed or summarized, containing in a book or document or original entry.

Prepaid items (expenses). An asset account reflecting charges entered in the accounts for benefits not yet received. Prepaid items differ from deferred charges in that they are spread over a shorter period of time than deferred charges and are regularly recurring costs of operations. Examples of prepaid items are prepaid rent, prepaid interest, and unexpired insurance premiums. An example of a deferred charge is unamortized discounts on bonds sold.

Primary treatment. The first major (sometimes the only) treatment, usually sedimentation, which results in the removal of a relatively high percentage of suspended matter but little or no colloidal and dissolved matter.

Private utility. An enterprise owned by private individuals or by a corporation and operated for the purpose of rendering utility service.

Processor. The functional part of the computer system that reads, interprets, and executes instructions. See also central processing unit.

Pro forma. For form's sake; an indication of form; an example. The term is used in conjunction with a noun to denote merely a sample form, document, statement, certificate, or presentation, the contents of which may be either wholly or partially hypothetical, actual facts, estimates, or proposals.

Profit and loss statement. See income statement.

Program. The complete sequence of instructions and routines needed to solve a problem or to execute directions in a computer.

Program budget. A budget wherein expenditures are based primarily on programs of work and secondarily on character and object class. A program budget is a transitional type of budget between the traditional character and object class budget, on the one hand, and the performance budget, on the other. See also performance budget and traditional budget.

Programming language. The words, mnemonics, and/or symbols, along with the specific rules allowed in constructing computer programs. Some examples are BASIC, FORTRAN, and COBOL.

Project. A plan of work, job, assignment, or task.

Property. See assets.

Property dividend. A dividend paid in this form of property.

Proprietary accounts. Those accounts which show actual financial position and results of operations, such as actual asset liabilities, fund equity balances, revenues, expenditures, and expenses as distinguished from budgetary accounts. See also budgetary accounts.

Public accounting. The practice of accounting for various entities which are related to the accountant clients rather than employers. This term is not synonymous with Government Accounting.

Purchase method. The method under which inventories are recorded as expenditures when acquired. See also consumption method.

Purchase order. A document which authorizes the delivery of specified merchandise or the rendering of certain services and the making of a charge for them.

Qualified certificate. An auditor's certificate in which the auditor states that he has not verified certain items, or is unable to do so, or that in his opinion the statements do not accurately or fully reflect actual conditions, or that the information furnished him is not considered sufficient to enable him to reach a conclusion.

Quasi-municipal corporation. An agency established by the state primarily for the purpose of helping the state to carry out its functions; for example, a county or school district. Some counties and other agencies ordinarily classified as quasi-municipal corporations have been granted the powers of municipal corporations by the state in which they are located. See also municipal corporation.

RAM (random access memory). Memory that can both be read and written into (i.e. altered) during normal operation. RAM is the type of memory used in most computers to store the instructions of programs currently being run.

Rate base. The value of utility property used in computing an authorized rate of return as authorized by law or a regulatory commission.

Rate, depreciation. The rate or percentage at which value or usefulness of a property is being exhausted.

Rate, flat. The charge for water or sewer service that is not based on metered quantity. It may be based on size of service pipe, number of water fixtures or outlets, land frontage, or other arbitrary measures usually fixed by law.

Rate making. The process of determining what the charges for water or other services furnished by a public service utility should be to yield an adequate revenue.

Rate, meter. The charge for water based on the quantity used as measured by water meters.

Rate, sewer. The charge for sewer service.

Realtime. Taking place during the actual occurrence of an event. It refers to computer systems or programs that perform a computation during the actual time that a related physical process transpires, in order that the results of the computation can be recorded or used to guide the physical process, e.g., computers that guide airplane landings.

Rebates. Abatements or refunds.

Receipts. Cash received.

Recoverable expenditure. An expenditure made for or on behalf of another government, fund, or department, or for a private individual, firm, or corporation which will subsequently be recovered in cash or its equivalent.

Refund. (Noun) An amount paid back or credit allowed because of an overcollection or because of the return of an object sold. (Verb) To pay back or allow credit for an amount because of an over-collection or because of the return of an object sold. (Verb) To provide for the payment of an obligation through cash or credit secured by a new obligation.

Refunding bonds. Bonds issued to retire bonds already outstanding. The refunding bonds may be sold for cash and outstanding bonds redeemed in cash, or the refunding bonds may be exchanged with holders of outstanding bonds.

Register. A record for the consecutive entry of a certain class of events, documents, or transactions, with proper notation of all the required particulars. The form of registers varies from a one-column to a multi-columnar sheet of special design whereon the entries are distributed, summarized, and aggregated for convenient posting to the accounts. See also journal.

Regular serial bonds. Serial bonds in which all periodic installments of principal repayment are equal.

Reimbursement expenditure. See recoverable expenditure.

Reimbursements. (1) Repayments of amounts remitted on behalf of another party. (2) Interfund transactions which constitute reimbursements of a fund for expenditures or expenses initially made from it which are properly applicable to another fund - e.g., an expenditure properly chargeable to a Special Revenue Fund was initially made from the General Fund, which is subsequently reimbursed. They are recorded as expenditures or expenses (as appropriate) in the reimbursing fund and as reductions of the expenditure or expense in the fund that is reimbursed.

Remote. Not hard-wired; communicating via switched lines such as telephone lines. Usually refers to peripheral devices (e.g., printers, video terminals) that are located at a site away from the computer's CPU.

Replacement cost. The cost as of a certain date of a property which can render similar service (but which need not be of the same structural form) as the property to be replaced. Replacement is an incremental element of operating costs and is variable depending upon levels of expenditure for maintenance. The statutory definition of the term means expenditures for obtaining and installing equipment, accessories or appurtences during the useful life of the treatment works necessary to maintain the capacity and performance for which they were designed and constructed. It is not a capital cost and does not increase the book value of an asset. See also reproduction cost.

Reproduction cost. The cost as of a certain date of reproducing an exactly similar new property in the same place. Sometimes this term is designated as "reproduction cost new" to distinguish it from "depreciated reproduction cost," which is the reproduction cost of a given property less the estimated amount of accumulated depreciation applicable to it. In the absence of any modifier, however, the term "reproduction cost" is understood to be synonymous with "reproduction cost new". See also replacement cost.

Requisition. A written demand or request, usually from one department to the purchasing officer or to another department, for specified articles or services.

Reserve. (1) An account used to earmark a portion of fund balance to indicate that it is not appropirate for expenditure; and (2) an account used to earmark a portion of fund equity as legally segregated for a specific future use.

Reserve for bad debts. This use of the term "reserve" is no longer acceptable under NCGA Statement 1. See allowance for uncollectibles.

Residual equity transfers. Nonrecurring or non-routine transfers of equity between funds, e.g., contribution of Enterprise Fund or Internal Service Fund capital by the General Fund, subsequent return of all or part of such contribution to the General Fund, and transfers of residual balances of discontinued funds to the General Fund or a Debt Service Fund.

Resolution. A special or temporary order of a legislative body; an order of a legislative body requiring less legal formality than an ordinance or statute. See also ordinance.

Restricted Assets. Monies or other resources, the use of which is restricted by legal or contractual requirements. In governmental accounting, special treatments are applied to restricted assets arising out of revenue bond indentures in Enterprise Funds. These are sometimes also called restricted "funds" but such terminology is not preferred.

Retirement allowances. Amounts paid to government employees who have retired from active service or to their survivors. See also annuity.

Retirement fund. See pension trust fund.

Retirement order. A work order that refers to the retirement of the utility plant. See also work order.

Retirement work. Work inclusive of labor and materials involved in the retirement of utility plant.

Return. The amount, usually an annual percentage of the rate base, that the accounting utility earns. For private utilities, the allowable rate of return is commonly fixed by state regulatory authorities.

Revaluation. A value other than cost placed on assets to reflect changes in the general price level.

Revenue bonds. Bonds whose principal and interest are payable exclusively from earnings of an Enterprise Fund. In addition to a pledge of revenues such bonds sometimes contain a mortgage on the Enterprise Fund's property.

Revenue bonds payable. A liability account which reflects the face value of revenue bonds issued and outstanding.

Revenue. In general terms, money received in exchange for the delivery of goods and services. A more precise definition: additions to assets, such as cash or accounts receivable, which (1) do no increase any liability, such as a debt obligation; (2) do not represent a recovery of an expenditure, such as results from a return of defective purchased equipment; (3) do not represent the cancellation of certain liabilities without a corresponding increase in other liabilities or a decrease in assets, such as forgiveness of a debt; and (4) are not contributions made to fund businesslike enterprises. Note: If accounts are kept on a cash basis, the term is synonymous with "Revenue Receipts." If the accounts are kept on an accrual

basis, the term includes all revenue, whether accredited or collected. In utility accounting, revenue usually refers to receipts from the rendering of a particular utility service as distinguished from income, which denotes receipts of all sources.

Revenues collected in advance. A liability account reflecting revenues collected before they become due.

Revenue deduction. An item of expense that is to be paid from revenue.

Revenue receipts. Revenue collected.

Revolving fund. (1) An Internal Service Fund. (2) An imprest account which is accounted for as an asset of a fund.

Right of way. Land acquired for location of utility lines inclusive of that required for construction, access, and maintenance.

ROM: (Read Only Memory) Memory containing fixed data or instructions that is permanently loaded during the manufacturing process. A computer can use the data in the ROM, but cannot change it.

Salvage value. The amount received for property retired, less any expenses incurred in connection with the sale or in preparing the property for sale, or, if retained, the amount at which the material recoverable is chargeable, to materials and supplies, or other appropriate account. (Can be preceded with the word gross or net.)

Sanitary sewer. A sewer that carries wastewater and to which storm and surface waters are not intentionally admitted.

Schedule, water service. A statement required from water supply companies by state regulatory commissions setting forth the rates to be charged consumers.

Schedules. 1. The explanatory or supplementary statements that accompany the balance sheet or other principal statement periodically prepared from the books; 2. The accountant's or auditor's principal work papers covering his examination of the books and accounts; 3. A written enumeration or detailed list in orderly form. See also exhibits and supporting schedules.

Secondary treatment. The treatment of wastewater by biological methods, usually after primary treatment, including such aerobic processes as activated sludge and trickling filters.

Sector. The fraction of a computer circular disk track on which data is stored. The number of sectors of a soft-sectored disk is determined when it is formated by a disk operating system. Typical values are between 10 and 16. The number of sectors of a hard-sectored disk is predetermined by the number of index holes in the disk, usually 10 or 16.

Securities. Bonds, notes, mortgages, or other forms of negotiable or nonnegotiable instruments. See also investments.

Self-supporting or liquidating debt. Debt obligations whose principal and interest are payable solely from the earnings of the enterprise for the construction or improvement of which they were originally issued. See also revenue bonds.

Separate sewer system. A system requiring dual sewers (sanitary sewers and storm sewers) as distinguished from the single combined sewers that serve both functions.

Serial annuity bonds. Serial bonds in which the annual installments of bond principal are so arranged that the combined payments for principal and interest are approximately the same each year.

Serial bonds. Bonds whose principal is repaid in periodic installments over the life of the issue. See also regular serial bonds, deferred serial bonds, straight serial bonds, and serial annuity bonds.

Service charge. The rate charged by the utility for rendering service, usually used as a ready-to-serve charge. A charge against users for the collection or the collection and treatment of wastewater and for the provision of the facilities therefor. The charges for use may be related to water consumption, size of water meter or connection, wastewater flow, strength of wastewater, number and type of plumbing fixtures, or other means of determination other than charges against property. This is also referred to as sewage service charge, sewerage service charge, sewage treatment charge, sewer rental, sewer rent, sewer charge, sewer service charge, and sewer-use charge in practice. The charge serves to produce some or all of the total annual revenue requirements.

Service life. See life, service.

Sewage. See wastewater.

Sewer service charge. As defined by Federal regulations, it is the combination of user charges and debt service charges. See also user charge.

Sewer system. See wastewater system.

Sewer utility. See wastewater utility.

Sewerage. A system of sewers and appurtenances for the collection, transportation, and pumping of wastewater and industrial wastes.

Shared revenues. Revenues levied by one government but shared on a predetermined basis, often in proportion to the amount collected at the level, with another government or class of governments.

Short-term debt. Debt with a maturity of one year or less after the date of of issuance. Short-term debt usually includes floating debt, bond anticipation notes, tax anticipation notes, and interim warrants.

Sinking fund. A fund established to account for the accumulation of resources for, and the payment of, the principal and interest of general long-term debt. See also debt service fund.

Sinking fund bonds. Bonds issued under an agreement which requires the government to set aside periodically out of its revenues a sum which, with compound earnings thereon, will be sufficient to redeem the bonds at their stated date of maturity. Sinking fund bonds are usually term bonds.

Sinking-fund depreciation. A method of computing depreciation which takes into account interest on the reserve. As compared with the straight-line method, the sinking fund method produces lower early acruals and higher acruals in the latter part of the service life.

Sinking fund requirement. The amount needed to be placed periodically in the sinking fund so that the accumulation thereof and the earnings thereon will be sufficient to redeem sinking fund bonds. Note: The amount required periodically should be calculated on an actuarial basis unless otherwise required by regulation.

Sludge disposal. The processing and disposition of the semiliquid mass of accumulated settled solids from the wastewater treatment plant.

Software: The tasks or programs that makes the computer perform a particular function.

Special accounts receivable: Accounts receivable resulting from the sale of materials, equipment, or services other than the rendering of sewer service.

Special assesssment fund. A fund used to account for the financing of public improvements or services deemed to benefit primarily the properties against which special assessments are levied.

Special funds. Sums of money or other assets set aside for specific purposes.

Special district. An independent unit of local government organized to perform a single governmental function or a restricted number of related functions. Special districts usually have the power to incur debt and levy taxes; however, certain types of special districts are entirely dependent upon enterprise earnings and cannot impose taxes. Examples of special districts are water districts, sanitrary districts, drainage districts, flood control districts, hospital districts, fire protection districts, transit authorities, port authorities, and electric power authorities.

Special district bonds. Bonds issued by a special district.

Special journal. A journal in which are entered all entries of a particular type. Examples include cash receipts journals, cash disbursement journals, purchases journals, etc. See also journal and general journal.

Special revenue fund. A fund used to account for the proceeds of specific revenue sources (other than special assessments, expendable trust, or for major capital projects) that are legally restricted to expenditure for specified purposes. Under NCGA Statement 1, the use of Special Revenue Funds is required only when legally mandated.

Standard cost. The predetermined cost of performing an operation or producing a product when labor, materials, and equipment are utilized efficiently under reasonable and normal conditions. Normal condition exist when there is an absence of special or extraordinary factors affecting the quality or quantity of the work performed, or the time or method of performing it.

Statements. See basic financial statements.

Statement of cash receipts and disbursements. A financial presentation presenting a summary of an entity's cash transactions in an accounting period.

Statement of changes in financial position. The basic financial statement which (for propietary funds, Nonexpendable Trust Funds, and Pension Trust Funds) presents information on the amount (but not necessarily the nature) of the sources and uses of an entity's cash or working capital during an accounting period in conformity with GAAP. The statement of changes in financial position may be presented in any of the following four ways: (1) as a statment of revenues and expenditures detailing all revenues, other financing sources, expenditures, and other financing uses; (2) as a statement beginning with reported net income, adjusting it for items not requiring (providing) working capital, and detailing only nonoperating financing sources and uses; (3) as a statement of cash receipts and disbursements; (4) as a statement beginning with reported net income, adjusting it for items not requiring (providing) cash, and detailing only nonoperating cash receipts and disbursements.

Statement of changes in fund equity. The basic financial statement which reconciles the equity balances of an entity at the beginning and end of an accounting period in conformity with GAAP. It explains the relationship between the operating statement and the balance sheet. Under NCGA Statement 1, statements of changes in fund equity are combined with operating statements into "all-inclusive" operating statement formats.

Statement of financial condition. See balance sheet.

Statement of revenues and expenditures. The basic financial statement which is the governmental fund and Expendable Trust Fund GAAP operating statement. It presents increases (revenue and other financing sources) and decreases (expenditures and other financing uses) in an entity's net current assets.

Statement of revenues and expenses. The basic financial statement which is the proprietary fund, Nonexpendable Trust Fund, and Pension Trust Fund GAAP operating statement. It presents increases (revenues) and decreases expenses) in an entity's net total assets.

Statistical tables. Financial presentations included in the Statistical Section of the CAFR which provide detailed data on the physical, economic, social, and political characteristics of the reporting government. They are intended to provide CAFR users with a broader and more complete understanding of the government and its financial affairs than is possible from the basic financial statements and supporting schedules included in the Financial Section. Statistical tables usually cover more than two fiscal years and often present data from outside the accounting records. In

contrast to Financial Section information, therefore, Statistical Section data are not usually susceptible to independent audit.

Statute. A written law enacted by a duly organized and constituted legislative body. See also ordinance, resolution, and order.

Stores. Materials or goods on hand in storerooms of the utility and subject to requisition.

Storm sewer. A sewer that carries surface runoff and to which sanitary wastewater flow is not intentionally admitted.

Straight-line average life depreciation. The method seeks to recover the net original cost including salvage of depreciable property over the average service life of the property in uniform charges.

Straight serial bonds. Serial bonds in which the annual installments of bond principal are about equal.

Structures. A general term used to describe physical plant exclusive of land.

Subactivity. A specific line of work performed in carrying out a governmental activity. For example, "cleaning luminaires" and "replacing defective street lamps" would be subactivities under the activity of "street light maintenance."

Subfunction. A grouping of related activities within a particular governmental function. For example, "police" is a subfunction of the function "public safety."

Subsidiary account. One of a group of related accounts which support in detail the debit and credit summaries recorded in a control account. An example is the individual property taxpayers' accounts for the taxes receivable control account in the general ledger. See also control account and subsidiary ledger.

Subsidiary Ledger. An accounting record containing a group of subsidiary accounts in which are recorded in detail identical, similar, or related transactions. The accounts in the subsidiary ledger support the debit and credit summaries recorded in a controlling account in the general ledger. See also control account, subsidiary account, and general ledger.

Subvention. A grant.

Supplies. Commodities needed in the rendering of service but not necessarily directly identified with it. Examples are fuel for building heat, janitor supplies, and lubricating oil.

Supporting schedules. Financial presentations used (1) to demonstrate compliance with finance-related legal and contractural provisions; (2) to present information spread throughout the basic financial statments that can be brought together and shown in greater detail (e.g., cash balances, investments, current and delinquent taxes, etc.); (3) to present greater detail for information reported in the basic financial statements (e.g., additional revenue sources detail, changes in general fixed assets by function, etc.); and (4) to present information not disclosed in GAAP basic financial statements (e.g., cash receipts and disbursements, changes in Agency Fund assets and liabilities, etc.).

Surety bond. A written promise to pay damages or to indemnify against losses caused by the party or parties named in the document, through nonperformance or through defalcation. For example, a surety bond might be required of an independent contractor. Surety bonds also include Fidelity Bonds covering government officials and employees.

Surplus. The amount by which the assets of a private utility exceed the total of its liabilities, reserves, and capital stock. In a publicly owned utility, the amount by which the assets exceed the total of the liabilities, reserves, and municipal equity. The use of the term "surplus" in governmental accounting is generally discouraged because it creates a potential misleading inference.

Suspended solids. Solids that either float on the surface of or are in suspension in water, wastewater, or other liquids and that are removable by a standard laboratory filtering procedure.

Suspense accounts. Accounts that carry charges or credits temporarily, pending the determination of the proper account or accounts to which such charges or credits are to be posted. Synonym: Clearing Account.

Tangible fixed assets. Physical fixed assets.

Tape. A recording media for data or computer programs. Tape can be in permanent form, such as perforated paper tape. Generally, tape is used as a mass storage medium, in magnetic form and has a far higher storage capacity than disk storage, but it takes much longer to write or recover data from tape than from a disk.

Tax lien. A right that municipal utilities have in many states to attach specific customers' (users') accounts to the taxes assessed against specific property. Such attachment operates as a claim against the property until the account is paid.

Tax levy ordinance. An ordinance by means of which taxes are levied.

Tax rate. The amount of tax stated in terms of a unit of the tax base, for example, 25 mills per dollar of assessed valuation of taxable property.

Tax rate limit. The maximum rate at which a government may levy a tax. The limit may apply to taxes raised for a particular purpose, or to taxes imposed for all purposes, and may apply to a single government, to a class of governments, or to all governments operating in a particular area. Overall tax rate limits usually restrict levies for all purposes and of all governments, state and local, having jurisdiction in a given area.

Tax roll. The official list showing the amount of taxes levied against each taxpayer or property. Frequently, the tax roll and the assessment roll are combined, but even in these cases the two can be distinguished.

Tax supplement. A tax levied by a local government which has the same base as a similar tax levied by a higher level of government, such as a state or province. The local tax supplement is frequently administered by the higher level of government along with its own tax. A locally imposed, state-administered sales tax is an example of a tax supplement.

Taxes. Compulsory charges levied by a government for the purpose of financing services performed for the common benefit. This term does not include specific charges made against particular persons or property for current or permanent benefits such as special assessments. Neither does the term include charges for services rendered only to those paying such charges, as for example, sewer service charges.

Term bonds. Issues of bonds in which the individual bonds nominally mature simultaneously. In some cases, however, there may be more than one maturity date, such as a nominal serial bond having postponed maturies in only a few late years of its term. Term bonds are usually retired from sinking funds.

Terminal. An input/output device used to enter data into a computer and record the output. Terminals are divided into two categories: hard copy (e.g., printers) and soft copy (e.g., video terminals).

Timesharing. Providing computer service to many users by working on each one's task part of the time.

Track. A circular strip on a computer disk's surface on which data is stored.

Track-density. The number of circular tracks per inch on the surface of a computer disk. A standard track density is 48 tracks per inch. Some newer disks have double that amount, 96 tracks per inch.

Trade discount. An allowance, usually varying in percentage with the volume of transactions, made to those engaged in certain businesses and allowable without respect to the time when the account is paid. These discounts are commonly considered a reduction of the sales or purchase price and not earnings. The term is not to be confused with "cash discount."

Traditional budget. A term sometimes applied to the budget of a government wherein expenditures are based entirely or primarily on objects of expenditure. See also program budget and performance budget.

Transfer voucher. A voucher authorizing transfers of cash or other resources between funds.

Treatment works. Any devices and systems used in the storage, treatment, recycling, and reclamation of municipal sewage, domestic sewage, or industrial wastes of a liquid nature, including intercepting sewers, outfall sewers, sewage collection systems, pumping, treatment process units, etc. See also wastewater utility.

Trial balance. A tabulation of the balances of the accounts in a ledger kept by double entry, with the debit and credit balances shown in separate columns. If the totals of the debit and credit columns are equal or their net balance agrees with a control account, the ledger from which the figures are taken is said to be "in balance."

Trunk sewer or main sewer A sewer that receives wastewater from a number of tributary branches or sub-main sewers and serves a large terrritory.

Trust funds. Funds used to account for assets held by a government in a trustee capacity for individuals, private organizations, other governments, and/or other funds.

Trust and agency fund. One of the eight generic fund types in governmental accounting. See also trust funds.

Turnkey system. A computer that is ready to be used without adding any hardware or software; it is complete as packaged for a particular application.

Unamortized. When a debit or a credit is to be entirely accounted for in the current account period, it is said to be unamortized.

Unbilled accounts receivable. An account which designates the estimated amount of accounts receivable for services or commodities sold but not billed. For example, if a utility bills its customers bimonthly but prepares monthly financial statements, the amount of services rendered or commodities sold during the first month of the bimonthly period would be reflected in the balance sheet under this account title.

Uncollectible accounts. See bad debts.

Unexpired insurance. The portion of policy premiums that represents the cost of insurance during subsequent accounting periods.

Unexpended allotment. That portion of an allotment not yet expended.

Unexpended appropriation. That portion of an appropriation not yet expended.

Unit cost. A term used in cost accounting to denote the cost of producing a unit of product or rendering a unit of service; for example, the cost of treating and purifying 1,000 gallons of sewage.

Unit of production depreciation. A variation of the straight-line depreciation method which, instead of allocating the depreciable base of a property unit uniformly through its service life, allocates it uniformly on a "use" or production basis such as miles, hours of run time, megwatt-hours, million gallons, or other measure of service.

Unit tax ledger. A ledger in which is recorded the assessed value and other data on taxable properties. Where the unit tax ledger system is used, there is an individual ledger card for each piece of taxable property, and where legal provisions permit, this ledger functions in lieu of a tax roll.

Unliquidated encumbrances. Encumbrances outstanding. See also encumbrances.

Unqualified certificate. An auditor's certificate in which the auditor states that the accounts referred to in the certificate are, in his opinion, correct and reflect accurately the conditions or the transactions, or the results shown.

Useful life. See life, useful.

User. The term refers to the party who is billed, usually for sewer service, from a single connection and has no reference to the number of persons served. See also customer.

User accounting and collecting. That phase of the utility's activity relating to the determination of the amount due from each customer, the billing therefor, collecting of amounts due, and the various procedures necessary to record in detail the transactions relating to the above activities.

User charge. As defined by Federal regulations, it is a charge levied on users of a treatment works, or that portion of the ad valorem taxes paid by a user, for the user's proportionate share of operation, maintenance and equipment replacement costs of such works. See also sewer service charge and user charge system.

User charge system. (UCS) The system of charges regulated by the EPA and developed to allocate the operation, maintenance, and replacement costs of wastewater treatment services to the recipients of the services within the service area. A system may be based upon either actual (or estimates of) use or ad valorem taxes but must assure that each user will pay his proportionate share of the costs. If based on use, the system must result in the distribution of the costs to each user (or user class) in proportion to such user's contribution to the total wastewater loading by all users (or user classes). A system based on ad valorem taxes may be approved only if the system was in existence on or before December 27, 1977 and that the system meets the requirements of a "dedicated" ad valorem tax system.

User class. As established in the preamble to the August 21, 1973 federal regulations (38 FR 22524), the user classes to be defined for a POTW's user charge system include residential, commercial, industrial, institutional and governmental.

Users' deposits. The liability of the utility for money deposited with it by users as at least a partial guarantee that they will meet their bills.

Utility. A term in general use to denote a public utility. An enterprise engaged in the performance of some public service such as furnishing water, gas, electricity, or sewer sevice.

Utility fund. See enterprise fund.

Utility plant. Value of all assets represented by plant used and useful in the rendering of utility service.

Value. As used in governmental accounting, this term designates: (1) the act of describing anything in terms of money; or (2) the measure of a thing in terms of money. The term should not be used without further qualification. See also book value and face value.

Value, fair. A value that is fair to all parties under the existing or assumed circumstances; the base on which earnings from service rates and charges may be predicated.

Value, going. The value of the development of the earning power of a public utility (in excess of the appraised value of physical property) used in determining the total present value of the property.

Value, water right. The value, expressed in dollars, of the right to use water occurring in a given source. It may be expressed in value per unit rate of flow, or per unit of volume diverted during a year.

Vendor. A firm or individual from whom the accounting utility purchases supplies or materials.

Vendor liability. An account payable or which may become payable to a vendor.

Volatile memory. Computer memory that loses its contents when power is removed unless battery back up is available. See also core and non-volatile memory.

Voucher. A written document which evidences the propriety of transactions and usually indicates the accounts in which they are to be recorded.

Voucher register. The journal in which vouchers are entered after being approved for entry.

Voucher system. A system which calls for the preparation of vouchers for transactions involving payments and for the recording of such vouchers in a special book of original entry, known as a voucher register, in the order in which payment is approved.

Vouchers payable. Liabilities for goods and services evidenced by vouchers which have not been paid.

Warrant. An order drawn by the legislative body or an officer of a government upon its treasurer directing the latter to pay a specified amount to the person named or to the bearer. It may be payable upon demand, in which case it usually circulates the same as a bank check; or it may be payable only out of certain revenues when and if received, in which case it does not circulate as freely.

Warrants payable. The amount of warrants outstanding and unpaid.

Wastewater. The spent water of a community. From the standpoint of source, it may be a combination of the liquid and water-carried wastes from residences, commercial buildings, industrial plants, and institutions together with any groundwater, surface water, and stormwater that may be present. In recent years,the word wastewater has taken precedence over the word sewage. See also domestic wastewater.

Wastewater system. (wastewater facility) A collective term used to denote all the property involved in the operation of a wastewater treatment utility. It includes land, sewer lines and appurtenances, pumping stations, treatment plants, and general property. See also wastewater utility. Synonym: Sewer System.

Wastewater treatment plant. An arrangement of devices and structures for treating wastewater, including sludge disposal, in order to remove or alter its objectionable constituents. (This also may be referred to as a wastewater facility or wastewater disposal plant or works, or water pollution control plant or works.)

Wastewater utility. An enterprise, the principal objective of which is the rendering of wastewater service. Synonym: "Sewer Utility." See also treatment works.

Water system. A collective term used to denote all of the property involved in the operation of a water utility. It includes land, water lines and appurtenances, pumping stations, treatment plants and general property.

Winchester disk. A computer hard disk permanently sealed in a drive unit to prevent contaminants from affecting the read/write head; this virtually eliminates the need for adjustment of the head by field service personnel. The disk is capable of storing larger amounts of data than a diskette.

Word. The greatest number of bits a computer is capable of handling in any one operation. Usually subdivided into bytes.

Word processing system. A system that processes text, performing such automatic functions as paragraphing, paging, left and right justification, rearrangement of lines, and printing the text.

Work in process. The cost of partially completed products manufactured or processed, such as a partially completed printing job. Sometimes referred to as "work in progress." See also construction in progress.

Work in progress. See Construction in Progress and Work in Process.

Work order. A written order authorizing and directing the performance of a certain task and issued to the person who is to direct the work. Among the items of information shown on the order are the nature and location of the job, specifications of the work to be performed, and a job number which is referred to in reporting the amount of labor, materials, and equipment used.

Work program. A plan of work proposed to be done during a particular period by the administrative agency in carrying out its assigned activities.

Work unit. A fixed quantity which will consistently measure work effort expended in the performance of an activity or the production of a commodity.

Working capital. Cash, materials, supplies, and other similar current assets necessary in the operation of the enterprises. Usually measured by the excess of current assets over the current liabilities.

Working capital fund. See internal service fund.

Yield. See effective interest rate.

APPENDIX B

BIBLIOGRAPHY

APPENDIX B - BIBLIOGRAPHY

ACCOUNTING

1. American Institute of Certified Public Accountants. Audits of State and Local Governmental Units.

2. American Water Works Association. Water Utility Accounting. 1980.

3. Ernst & Whinney. How Your Government Can Apply GAAP. 1982.

4. Government Finance Research Center and Peat, Marwick, Mitchell & Co., Financial Capability Guidebook. 1983.

5. Hayes, F. O'R., et.al. Linkages - Improving Financial Management in Local Government. 1982.

6. Municipal Finance Officers Association, et.al. An Accounting Handbook for Small Cities and Other Governmental Units.

7. Municipal Finance Officers Association. Governmental Accounting, Auditing, and Financial Reporting. 1980.

8. National Association of Regulatory Utility Commissioners. Depreciation Practices for Small Water Utilities. August 15, 1979.

9. National Association of Regulatory Utility Commissioners. Depreciation Practices for Very Small Water Utilities. November 15, 1981.

10. National Association of Regulatory Utility Commissioners. Glossary of Depreciation Terms. November 10, 1980.

11. National Association of Regulatory Utility Commissioners. Public Utility Depreciation Practices. 1968.

APPENDIX B - BIBLIOGRAPHY

ACCOUNTING

12. National Association of Regulatory Utility Commissioners. Results of Survey on Depreciation Practices for Water and Sewer Utilities, 1981.

13. National Association of Regulatory Utility Commissioners. Uniform System of Accounts for Class C and D Sewer Utilities 1977.

14. Water Pollution Control Federation. Uniform System of Accounts for Wastewater Utilities. Manual of Practice No. 10. 1970.

APPENDIX B - BIBLIOGRAPHY

ENGINEERING

1. American Public Works Association, et al. Financing and Charges for Wastewater Systems. 1973.

2. American Water Works Association. Computer-Based Automation in Water Systems. 1980.

3. American Water Works Association. Water Rates Manual. AWWA No. M1 2nd ed. 1972.

4. American Water Works Association. Water Utility Management. AWWA No. M5. 1980.

5. Thompson, William B. "Setting Up a Simplified P-M Program". WATER/ Engineering & Management. January 1983.

6. U. S. Environmental Protection Agency. Diagnostic Operational Modeling Programs for Municipal Wastewater Treatment Plants -Field Evaluation and Process Review Project Report. EPA Region 10. October 1982.

7. U. S. Environmental Protection Agency. Diagnostic Operational Modeling Programs for Municipal Wastewater Treatment Plants-Users Manual. EPA Region 10. October 1982.

8. U. S. Environmental Protection Agency. Energy Management Diagnostics. EPA-430/9-82-002. 1982.

9. U.S. Environmental Protection Agency. Guidance Manual for POTW Pretreatment Program Development. August 1983.

10. U.S. Environmental Protection Agency. Handbook of Procedures - Construction Grants Program for Municipal Wastewater Treatment Works, 2nd Edition. MCD-03. 1980.

APPENDIX B - BIBLIOGRAPHY

ENGINEERING

11. U. S. Environmental Protection Agency. Maintenance Management Systems for Municipal Wastewater Facilities. MO-7. EPA-430/9-74-004. October 1973.

12. U. S. Environmental Protection Agency. Model Protocol for the Comprehensive Evaluation of Publicly Owned Treatment Works Performance and Operation. EPA-600/52-82-015. May 1982.

13. U. S. Environmental Protection Agency. Wastewater Utility Recordkeeping, Reporting and Management Information Systems. EPA-430/9-82-006. 1982.

14. Water Pollution Control Federation. Manual of Practice No. 3 - Regulations of Sewer Use. 1968.

APPENDIX B - BIBLIOGRAPHY

COMPUTER

1. Auer, J. and Harris, C.E. Major Equipment Procurement.

2. Buck. Introduction to Data Security and Controls. Q.E.D. Information Sciences, Inc. 1982.

3. Cleary and Levenbach. The Professional Forecaster. Lifetime Learning Publications. 1982.

4. Cushing. Accounting Information Systems. Addison-Wesley Publishing Company. 1982.

5. Dagless and Aspinall. Introduction to Microcomputers. Computer Science Press, Inc. 1982.

6. Danhof and Smith. Computing System Fundamentals. Addison-Wesley Publishing Company. 1981.

7. Davis. Computers and Business Information Processing. Addison-Wesley Publishing Company. 1981.

8. Digital Equipment Corporation. Guide to Personal Computing.

9. Eaton and Snithers. A Manager's Guide to Information Technology. Philip Allan Publishers, Ltd. 1982.

10. Grinold and Marshall. Manpower Planning Models. North-Holland Publishing Company. 1977.

11. Haueisen and Camp. Business Systems for Microcomputers. Prentice-Hall, Inc. 1982.

12. Isshiki. Small Business Computers: Selection. Prentice-Hall, Inc. 1982.

13. Jermann. Structure and Programming of Microcomputers. Alfred Publishing Co., Inc. 1982.

14. Kindred. Data Systems and Management. Prentice-Hall. 1980.

15. Kraemer and King. Computers and Local Government: Vol. I, II. Praeger Publishers, Inc. 1977.

16. Kroenke. Business Computer Systems. Mitchell Publishing Company. 1981.

17. McKinney. How to Computerize Your Small Business. Prentice-Hall, Inc. 1980.

18. O'Brien. Computers in Business Management. Richard D. Irwin. 1982.

19. Peters, Laurence J. Software Design: Methods and Techniques. Yourden Press, New York, NY. 1981.

20. Pooch and Chattergy. Minicomputers: Hardware, Software, and Selection. West Publishing Company. 1980.

21. Porochnia, Leonard. The Minicomputer: To Buy Or Not To Buy. National Association of Accountants, New York, NY. 1982.

22. Rinder, Robert M. A Practical Guide to Small Computers. Monarch Press, New York, NY. 1981.

23. Rosa, Nicholas and Miller, Merl. Management's Guide to Desktop Computers. The Dartnell Corporation, Chicago, IL. 1982.

24. Singlemann and Longhurst. Business Programming Logic: A Structural Approach. Prentice-Hall, Inc. 1982.

25. Smolin. How to Buy the Right Small Business Computer System. John Wiley and Sons, Inc. 1981.

26. Walsh. Understanding Computers. John Wiley and Sons, Inc. 1982.

27. Warnier, J.D. Logical Construction of Systems.

28. Watson and Carroll. Computers for Business: A Managerial Emphasis. Business Publications, Inc. 1980.

29. Wilkinson. Accounting and Information Systems. John Wiley and Sons, Inc. 1982.

APPENDIX B - BIBLIOGRAPHY

COMPUTER

PERIODICALS

1. ACCESS (The Journal of Microcomputer Applications), published six times a year by LEDS Publishing Co., Inc., Durham, NC.

2. Business Computer Systems, published monthly by Cahners Publishing Co., Boston, MA.

3. Byte, published monthly by McGraw-Hill, St. Peterborough, NH.

4. Computing Newsletter, published monthly except June, July, and August by the Center for Cybernetics Systems Synergism (CYSYS), Colorado Springs, CO.

5. ECAN (Engineering Computer Applications Newsletter), published monthly by Engineering Computer Applications, Inc., Englewood, CO.

6. Infosystems, published monthly by Hitchcock Publishing Co., Wheaton, IL.

7. Interface Age, published monthly by McPheters, Wolfe and Jones, Cerritos, CA.

8. Mini-Micro Systems, published monthly by Cahners Publishing Co., Boston, MA.

APPENDIX C

INPUT SOURCE DOCUMENTS

APPENDIX C

INPUT SOURCE DOCUMENTS

List of Figures

(Applicable Program in Parentheses)

	PAGE
Sample Chart of Accounts for POTW (P-1)	C-1,C-2
Facility Inventory Functional Number System (P-2)	C-3,C-4
Sample Maintenance Procedure Data (P-2)	C-5
Stock Issue Ticket (P-2)	C-6
Customer Meter Reading Card (P-3)	C-7
Water Meter Readings (P-3)	C-8
Request for Service (P-3)	C-9,C-10
Timesheet (P-4)	C-11
Time Clock Card (P-4)	C-12
Employee Performance Review and Evaluation Form (P-4)	C-13
Sample Invoice (P-5)	C-14
Sample Receiving Report (P-5)	C-14
Requisition Form (P-5)	C-15
Bid (Quotation) Form (P-5)	C-16
Fixed Asset Record (P-6)	C-17
Equipment Maintenance Record (P-6)	C-18
Departmental Revenue Worksheet (P-11)	C-19
Work Order (P-12)	C-20
Preventive Maintenance Work Record and Report of Trouble (P-12)	C-21
Daily Utility Operating Report (P-12)	C-22
Daily Laboratory Record/Report (P-12)	C-23
Energy Data Form (P-12)	C-24

APPENDIX C

INPUT SOURCE DOCUMENTS

List of Figures

(Continued)

	PAGE
Monthly Plant Performance Report (P-12)	C-25
Maintenance Activity Report (P-12)	C-26
Operating Expense Worksheet (P-13)	C-27
Budget Activity Summary Worksheet (P-14)	C-28

SAMPLE CHART OF ACCOUNTS FOR A POTW

CODING	ITEM
00	The first two digits indicate the fund (an independent fiscal and accounting entity with a self-balancing set of accounts):
	10 General
	20 Special Revenue
	30 Capital Projects
	40 Enterprise
	41 Wastewater Enterprise
	50 Internal Service
	60 Special Assessment
	70 Debt Service
	80 Trust and Agency
00-00	The next two digits indicate the series of revenue sources:
	10 Taxes
	11 General Property
	20 User Charges
	21 Sewer Service Charges
	30 Intergovernmental
	40 License Permits
	50 Departmental Billings
	60 Rent
	70 Miscellaneous
00-00-000	The next three digits indicate the major object of expenditure:
	100 Personal Services
	200 Operating Expenses
	300 Maintenance Expense
	400 Capital Outlay
	Other items at this level could be activities:
	100 Collection
	200 Pumping
	300 Treatment
	310 Preliminary
	320 Primary
	330 Secondary
	340 Tertiary
	350 Sludge
	400 General Administration
	500 Laboratory

SAMPLE CHART OF ACCOUNTS FOR A POTW
(Continued)

CODING	ITEM
00-00-000 (Cont'd.)	Or program/project:
	100 Major Capital Outlay
	200 Federal Project
00-00-000-0000	The last four digits indicate the account type:
	1000 Cash
	2000 Assets Other Than Cash, Property, Plant and Equipment
	3000 Property, Plant, and Equipment
	4000 Liabilities and Fund Balances
	5000 Income (Revenue) Accounts
	6000 Expense Accounts

FACILITY INVENTORY

FUNCTIONAL NUMBER SYSTEM

100 Raw Wastewater Station
- 110 Screening
  - 111 Bar Screens
  - 112 Conveyors
- 120 Grinding
  - 121 Grinders
- 130 Wastewater Flow
  - 131 Pumping
  - 132 Valves and Gates
  - 133 Wet Well Level Control
  - 134 Flow Measurement
  - 135 Pump Seal Water
  - 136 Compressed Air
- 140 Auxiliary Services
  - 141 Sump Pumping
  - 142 Ventilation
  - 143 Hoists
  - 144 Electrical Supply

200 Primary Treatment
- 210 Primary Settling
  - 211 Tanks and Gates
  - 212 Sludge Collectors
  - 213 Scum Launders
- 220 Sludge Handling
  - 221 Pumping
  - 222 Pump Seal Water
  - 223 Flow Measurement
  - 224 Sludge Degritting
- 230 Scum Handling
  - 231 Pumping
  - 232 Pump Seal Water
  - 233 Scum Well Level Control
- 240 Auxiliary Services
  - 241 Sump Pumping
  - 242 Ventilation
  - 243 Hoists
  - 244 Electrical Supply

300 Secondary Treatment
- 310 Aeration
  - 311 Tanks and Gates
  - 312 Adjustable Weirs
  - 313 Tank Air Diffusers
  - 314 Incremental Feed Channel Air Diffusers
  - 316 Tank and Feed Channel Water Sprays
  - 316 Mixed Liquor Flow Measurement
  - 317 Diffuser Sock Washing
- 320 Air Delivery
  - 321 Filters
  - 322 Blowers
  - 323 Flow Measurement
  - 324 Pressure Relief
  - 325 Channel Sparger Air Delivery
  - 326 Compressed Air
- 330 Secondary Clarifiers
  - 331 Mixed Liquor Channel Air Spargers
  - 332 Mixed Liquor Channel Water Sprays
  - 333 Clarifier Mechanism and Gates
- 340 Chemical Treatment
  - 341 Flocculant Mixing
  - 342 Flocculant Pumping
- 350 Return Sludge
  - 351 Pumping
  - 352 Pump Seal Water
  - 353 Return Sludge Wet Well Level
  - 354 Dewatering
  - 355 Flow Measurement
- 360 Excess Sludge
  - 361 Pumping
  - 362 Pump Seal Water
  - 363 Flow Measurement
  - 364 Dilution
- 370 Scum
  - 371 Scum Well Level Control
  - 372 Scum Pumping
- 380 Auxiliary Services
  - 381 Sump Pumping
  - 382 Ventilation
  - 383 Hoists
  - 384 Electrical Supply

400 Chlorination and Effluent Flow
- 410 Chlorination
  - 411 Chlorine Handling and Weighing
  - 412 Evaporation
  - 413 Chlorinators
  - 414 Chlorine Detection and Venting
  - 415 Injectors and Diffusers
  - 416 Contact Chambers
- 420 Residual Chlorine Analysis
  - 421 Analyzers
  - 422 Influent Sampling
  - 423 Effluent Sampling
- 430 Effluent Water
  - 431 Weirs and Gates
  - 432 Level Measurement
  - 433 Return Water Pumping, High Lift
  - 434 Return Water Pumping, Low Lift
  - 435 Pump Seal Water
- 440 Auxiliary Services
  - 441 Sump Pumping
  - 442 Ventilation
  - 443 Hoists
  - 444 Electrical Supply

Source: EPA "A Planned Maintenance Management System for Municipal Wastewater Treatment Plants"

FACILITY INVENTORY

FUNCTIONAL NUMBER SYSTEM

(Continued)

500 Sludge and Scum Processing
- 510 Auxiliary Services
  - 511 Sump Pumping
  - 512 Ventilation
  - 513 Hoists
  - 514 Electrical Supply
- 520 Sludge Thickening
  - 521 Thickeners
  - 522 Pumping
  - 523 Flow Measurement
  - 524 Chlorination
  - 525 Compressed Air
- 530 Sludge Storage and Handling
  - 531 Sludge Storage Tank
  - 532 Screw Feeders
  - 533 Pumps
  - 534 Conveyors
  - 535 Flow Measurement
  - 536 Flushing Water
  - 537 Hydraulic Power
  - 538 Sump Pumping
- 540 Scum Handling
  - 541 Weir Control
  - 542 Pumping
- 550 Lime Treatment
  - 551 Dry Lime Storage Tank
  - 552 Level Indication
  - 553 Vibration
  - 554 Dust Collection
  - 555 Dry Lime Feeding
  - 556 Lime Mixing
  - 557 Lime Slurry Pumping
- 560 Ferric Chloride Treatment
  - 561 Storage Tanks
  - 562 Compressed Air Supply
  - 563 Day Tanks
  - 564 Pumping
- 570 Polymer Treatment
  - 571 Mixing
  - 572 Pumping
- 580 Sludge Conditioning
  - 581 Conditioning Tanks
- 590 Vacuum Filtration
  - 591 Vacuum Pumping
  - 592 Filtering
  - 593 Filter Agitation
  - 594 Filtrate Pumping

600 Incineration
- 610 Incinerators
  - 611 Mechanisms
- 620 Gas Supply
  - 621 Oil Supply
  - 631 Shutoff
  - 632 Filtration
  - 633 Pumping
  - 634 Flow Rate
- 640 Air Supply and Foul Gases
  - 641 Cooling Air
  - 642 Combustion Air
  - 643 Four Gas Delivery
- 650 Scrubbing
  - 651 Scrubbers
  - 652 Flush Water
  - 653 Exhaust Fans
- 660 Ash Handling
  - 661 Elevators
  - 662 Conveyors
  - 663 Storage
  - 664 Conditioning
  - 665 Feeding
- 670 Auxiliary Services
  - 671 Sump Pumping
  - 672 Ventilation
  - 673 Hoists
  - 674 Electrical Supply

700 Utilities and Services
- 710 Recorders and Meters
  - 711 Flow
  - 712 Pressure
  - 713 Level
  - 714 Concentration
  - 715 Electrical and Position
- 720 Laboratory Facilities
  - 721 Lab Equipment
- 730 Plant Service Equipment
  - 731 Plant Water
  - 732 Heating
  - 733 Hot Water
  - 734 Lighting
- 740 Outside Utility Supply
  - 741 Electricity
  - 742 Gas
  - 743 County Water
- 750 Maintenance & Repair Facilities
  - 751 Machine Shop
  - 752 Mechanical Shop
  - 753 Electrical Shop
- 760 Buildings and Grounds
- 770 Safety Equipment
  - 771 Fire Extinguishers
  - 772 Hydrants
  - 773 Emergency Lighting
  - 774 First Aid Equipment

Source: EPA "A Planned Maintenance Management System for Municipal Wastewater Treatment Plants"

Sample Maintenance Procedure Data

MAINTENANCE PROCEDURE SHEET			Page 1 of 1	MPS No. 4221 M1
EQUIPMENT NAME Sampling Pump M, Chlorination Influent				Average Time S-1 _____ min. S-2 12 min. S-3 _____ min.
Plant Area	Level	Location		

MAINTENANCE DESCRIPTION

Inspect packing gland adjustment.

SAFETY PRECAUTIONS

Observe standard safety precautions
De-energize circuit and tag "out of service"

TOOLS, PARTS, MATERIALS, TEST EQUIPMENT

Rags
Flashlight
Safety tag
7/8-inch combination wrench
Flexible rule or steel rule with holder

PROCEDURE

Preliminary— De-energize circuit and tag "out of service."

To inspect packing gland adjustment:

NOTE 1: Damage to shaft sleeve or shaft occurs when:
(1) Rings are added to stop leakage rather than repacking.
(2) Gland nuts are not adjusted evenly.
(3) Gland is improperly adjusted for lubrication.
(4) Packing becomes hard and gland is overtightened to stop leakage.

1. Ensure gland nuts have been adjusted evenly and properly.

2. Measure distance packing gland can be moved before contact is made with housing. Distance should be greater than 1/4-inch; if not, renew stuffing box packing as described on MPC R-1.

3. Remove safety tag and energize circuit.

Page 1 of 1

MPS No. 4221 M1

Source: EPA "A Planned Maintenance Management System for Municipal Wastewater Treatment Plants"

STOCK ISSUE TICKET

S.I.T. NUMBER _____

QTY	UNIT	DESCRIPTION/NAME	STOCK/EQUIPMENT NO.

DATE REQUESTED ___/___/_____ REQUESTED BY _____
(signature)
DELIVER TO _____

DATE ISSUED ___/___/_____ SUPPLIED BY _____
(signature)
TO BE RETURNED? YES NO RECEIVED BY _____
(signature)

DATE RETURNED ___/___/_____ RETURNED BY _____
(if applicable) (signature)
RECEIVED BY _____
(signature)

CUSTOMER
METER READING CARD

CUSTOMER ACCOUNT NUMBER _____

CUSTOMER NAME _____

_____

MAILING ADDRESS _____

_____

_____

_____

SERVICE ADDRESS
(If Different from
Mailing Address)

METER READING

1	2	3	4	5	6	7	8	9	0
1	2	3	4	5	6	7	8	9	0
1	2	3	4	5	6	7	8	9	0
1	2	3	4	5	6	7	8	9	0

NUMBER OF CONSECUTIVE ESTIMATES _____

PREVIOUS READING _____

PROJECTED LOW READING _____

PROJECTED HIGH READING _____

NUMBER OF METER DIALS _____

METER MAKE _____

METER NUMBER _____

METER SIZE _____

SERVICE NUMBER _____

REMOTE - METER SERIAL NUMBER (IF APPLICABLE) _____

METER LOCATION _____

NAME OF METER READER _____

REVERSE SIDE CONTAINS SPECIAL INSTRUCTIONS TO METER READER, AND COMMENTS FROM METER READER FOR SITUATIONS THAT MAY ARISE AS THEY PERTAIN TO READING THE METER.

WATER METER READINGS

CUSTOMER NAME

CUSTOMER ADDRESS

METER LOCATION

METER TYPE NO. GALS. FEET

DATE	BY	READING									REMARKS

MUNICIPAL AUTHORITY

DEPARTMENT OF PUBLIC WORKS

BUREAU OF ENGINEERING

REQUEST FOR SERVICE

(WATER AND/OR SEWER CONNECTION)

The following information is requested so that your application can be considered for processing:

1) Owner's Name _____

2) Street _____ City _____ State _____

3) House Number _____ (Where connection is requested)

4) Parcel or Lot Number _____ Subdivision Name _____

5) Does the property pay front foot water benefit tax ___ front foot sewer ___

6) Attach Plan or Sketch showing the following, (if no SDP is required):

   a) Subject property: _____

   b) Name of fronting road: _____

   c) Nearest road intersection: _____

   d) Location at property line of requested connections (water, sewer, sprinkler): _____

7) Size of connection requested:

   a) Sewer house connection size: _____ Contract No. _____

   b) Domestic water house connection size: _____ Contract No. _____

   c) Domestic water meter size: _____

   d) Detector Check size: _____

   * A letter of request for Unmetetered Fire Protection Connection must accompany this completed form, together with four (4) copies of a plan showing the desired location of such connection.

8) Any structure being renovated, leased or if the occupant(s) are being changed the developer shall supply the Bureau of Engineering with a drawing showing:

   a) Building layout

   b) Location of suite or bay in question

   c) Occupant of suite(s) or bay(s)

(Continued)

ADDITIONAL INFORMATION REQUIRED FOR COMMERCIAL AND INDUSTRIAL CONNECTIONS:

a) WAREHOUSE:
Storage Area _____ sq. ft.
Office Area _____ sq. ft.

b) COMMERCIAL:
Office Area _____ sq. ft.
Business Area _____ sq. ft.
Other - Service, Professional, Business, etc. _____ sq. ft.

c) INDUSTRIAL (Type): _____
Production Area _____ sq. ft.
Offie Area _____ sq. ft.

d) FOOD SERVICE (Type): _____
Seating Capacity:
Dining _____
Cocktail Lounge _____

e) OTHERS: If school, specify: name of school; number of students; area in square feet; if hospital, state name, number of beds, area in square feet, etc.

_____

_____

NUMBER OF EMPLOYEES:	Within Next 2 Years	Ultimate
Office:		
Production, Sales or Service:		
TOTAL		

WATER USAGE:	Average GPD	Peak GPD	Average GPD	Peak GPD
Domestic:				
Process:				
SEWER DISCHARGE:	**Average GPD**	**Peak GPD**	**Average GPD**	**Peak GPD**
Domestic:				
Process:				

SIGNATURE (Developer): _____

PRINT NAME: _____

DATE: _____

PHONE NO.: _____

TIME DISTRIBUTION SHEET

NAME _____

EMPLOYEE NO. _____

DEPARTMENT _____

	1	2	3	4	5	6	7	8	9	10	11	12	13	14	15	16	17	18	19	20	21	22	23	24	25	26	27	28	29	30	31	OT HRS.	REG. HRS.	SICK LEAVE HRS.	VAC. HRS.	HOLI. HRS.	TOTAL MON. HRS.
JAN																																					
FEB																																					
MAR																																					
APR																																					
MAY																																					
JUNE																																					
JULY																																					
AUG																																					
SEPT																																					
OCT																																					
NOV																																					
DEC																																					

LEAVE BALANCE BROUGHT FORWARD FROM 19___ : _____ TOTAL

VACATION EARNED THIS YEAR : _____

TIME CLOCK CARD

NAME _____ EMPL. NO. _____

PAY PERIOD ENDING _____

R.T. HOURS	RATE	AMOUNT	F.I.C.A.	NUMBER OF EXEMPTIONS
O.T. HOURS	RATE	AMOUNT	FED. W.T.	TOTAL EARNINGS
HOURS		AMOUNT	CITY/ST. W.T.	TOTAL DEDUCTIONS
			STATE U.C.	BALANCE DUE
			BONDS	

	DAILY TOTALS R.T. Hours	O.T.
M AM 6:45		
M PM 3:00		
TU AM 6:49		
TU PM 3:00		
W AM 6:38		
W PM 3:00		
TH AM 6:38		
TH PM 3:00		
FR AM 6 46		
FR PM 3:02		

TOTAL HOURS SHOWN IS CORRECT SIGNATURE

EMPLOYEE PERFORMANCE REVIEW AND EVALUATION

Name_____ Date_____

Department_____ Job Classification_____ Grade_____

Duties

DO NOT ALLOW PERSONAL FEELING TO GOVERN YOUR RATING. Do not be influenced by UNUSUAL SITUATIONS which are not typical. Check in block which seems best to fit above employee.

Knowledge of Work	Practically None ☐	Below Average ☐	Acceptable Knowledge ☐	Somewhat above Average ☐	Very well Informed ☐
Effect on Workers	Often Breeds Trouble ☐	Sometimes causes Dissension ☐	No outstanding effect on workers ☐	Better than Average ☐	Promotes cooperation and Good-will ☐
Promptness	Always Tardy ☐	Must be reminded about Promptness ☐	Usually Prompt ☐	Never Late without good cause ☐	Almost never Late ☐
Responsibility	Careless and Negligent ☐	Not very reliable ☐	Accepts Resp. when asked ☐	Assumes Resp. without being told ☐	Accepts Resp. above Average Requirement ☐
Accuracy	Is highly inaccurate ☐	Is often inaccurate ☐	Makes Occasional errors ☐	Somewhat above Average ☐	Rarely makes mistakes ☐
Quantity of Work	Amount of work unsatisfactory ☐	Turns out just enough to get by ☐	Turns out fair amt. ☐	Always finishes alloted amount ☐	Turns out more than average amount ☐
Initiative	Must always be told what to do ☐	Needs considerable Supervision ☐	Needs Direction and help in cases ☐	Needs little Supervision ☐	Pushes work thru on own initiative ☐
Application	Indifferent and Lazy ☐	Tendency toward Indifference ☐	Average application ☐	Interested and Diligent ☐	Puts extra effort into work ☐

Comments:

Use back of sheet for additional information or remarks.

Source: EPA "Wastewater Utility Recordkeeping, Reporting and Management Information Systems"

SAMPLE INVOICE

Ace Laboratories, Inc.
111 MAIN STREET
ANYTOWN, USA
TELEPHONE: 111/222-3333

INVOICE XXXXX

SOLD TO [ ]

SHIPPED TO [ ]

ACCOUNT NO.	YOUR ORDER NO.	INVOICE DATE	TERMS	SHIPPED VIA	SALESMAN	PPD. OR COLL.

ORDERED	SHIPPED	ITEM NO.	DESCRIPTION	UNIT PRICE	AMOUNT

SAMPLE RECEIVING REPORT

Ace Laboratories, Inc. No. XXXXX RECEIVING REPORT

RECEIVED FROM				DATE RECEIVED
ADDRESS				PURCHASE ORDER NO.
VIA	PRO. NUMBER	PREPAID	COLLECT	RECEIVED IN DEPT. BY
REC'D IN SHIPPING BY	WEIGHT	CHARGES		FOR DEPT.
PCS. RECEIVED	PCS. PER FREIGHT BILL	BREAKAGE OR SHORTAGE		

QUANITY REC'D	QUANITY BACK/O	CATALOG NUMBER	DESCRIPTION
1			
2			
3			
4			
5			
6			
7			
8			
9			
10			

COMMENTS:

REQUISITION FORM

R. F. Number _____

QTY	UNIT	DESCRIPTION/NAME	COST/UNIT	TOTAL COST
		TOTAL		

JUSTIFY ALL ITEMS HERE: _____

_____

_____

(continue on back if necessary)
If SOLE SOURCE SUPPLIER, attach "SOLE SOURCE" JUSTIFICATION FORM.
If to be purchased on basis of EMERGENCY, justify in DETAIL.

Date required _____
Use/site location _____
Is this NEW equipment or REPLACEMENT? _____
_____
Est. Useful Life _____

COMPLETE THIS AREA IF PURCHASE IS TO COST MORE THAN $100, HAS A USEFUL LIFE OF MORE THAN 5 YEARS, AND IS A REPLACEMENT?
Old Fixed Asset:
Description _____
Inventory Code _____ Location _____
Traded? _____ Scrapped? _____

OFFICE USE ONLY
Delivered ___/___/___
Date ordered _____
Vendor _____
Delivery date expected
_____/___/_____
Total units _____
Total cost _____
P.O. # _____
Sole Source _____

PRIORITY: (circle one)
1. Emergency
2. Hand-carry
3. Expedite
4. Routine

If priority not assigned by Dept. Head, will be ROUTINE.

Submitted by _____
Date _____

DEPARTMENT HEAD APPROVAL
_____
Date _____

FUND APPROVAL-COMPTROLLER
_____
Date _____

BID
(QUOTATION)

[Vendor name, address, and phone number]

No. _____

TO: (Utility name and address)

DATE _____
INQUIRY DATE _____
INQUIRY NUMBER _____
EST. DELIVERY _____
(from receipt of order)
TERMS _____
F.O.B. _____
TO BE SHIPPED VIA _____
_____
SALESMAN _____

IN RESPONSE TO YOUR INQUIRY, WE SUBMIT THE FOLLOWING QUOTATION.

QUANTITY	STOCK NUMBER/DESCRIPTION	PRICE	PER	AMOUNT

Please refer to the above Quotation Number when placing your order.

By _____

FIXED ASSET RECORD

ASSET TAG NO. _____

ASSET CLASSIFICATION _____ FIXED ASSET LEDGER ACCOUNT NO. _____

ASSET DESCRIPTION	VENDOR

Manufacturer's Serial No. _____

ACQUISITION DATA	LOCATION DATA
DATE ACQUIRED _____	1 DATE _____ OFFICE OR DEPT. _____
METHOD OF ACQUISITION _____	BUILDING OR OTHER LOCATION _____
PURCHASE ORDER NO. _____	RESPONSIBLE OFFICIAL OR OTHER PERSON _____
ORIGINAL COST OR APPRAISAL _____	2 DATE _____ OFFICE OR DEPT. _____
TRANSPORTATION COST _____	BUILDING OR OTHER LOCATION _____
INSTALLATION COST _____	RESPONSIBLE OFFICIAL OR OTHER PERSON _____
OTHER COST/FEES _____	
TOTAL COST _____	

FUND SOURCE

FUND	AMOUNT	FUND	AMOUNT

DISPOSITION DATA

DATE OF DISPOSITION _____	ASSET VALUE _____
METHOD OF DISPOSITION _____	TRADE IN CREDIT OR SALE PRICE _____
REASON FOR DISPOSITION _____	TAG NO OF REPLACEMENT _____
DATE, _____	APPROVAL _____

YEAR DEPRECIATION BEGAN: _____ ASSET LIFE: _____ SALVAGE VALUE: _____ DEPRECIATION METHOD: _____

DATE	COST	ADDITIONS DELETIONS	ADJUSTED COST	PERIOD DEPREC.	ACCUM. DEPREC.	RESIDUAL VALUE	PHYS INVENTORY CKD	PHYS INVENTORY CONDITION	MAINTENANCE COST DATE	MAINTENANCE COST REFERENCE	MAINTENANCE COST AMOUNT

Source: EPA "Comprehensive Diagnostic Evaluation and Selected Management Issues"

MAINTENANCE RECORD

EQUIPMENT NO. _____
MAKE OF UNIT _____
MODEL NO. _____

DATE	HOURS	WORK ORDER NO.	PARTS COST	LABOR COST	WORK DONE BY	REMARKS	DATE	HOURS	WORK ORDER NO.	PARTS COST	LABOR COST	WORK DONE BY	REMARKS

Departmental Revenue Worksheet

DEPARTMENT: Police

(1)	(2)	(3)	(4)	(5)	(6)	(7)
			Applied to What Activity			
RECEIPT ITEM	Fund	Amount Anticipated	Admin.	Investig.	Patrol	Youth Srs.
LEAA GRANT (Drug Program)	Special Revenue (Federal)	$121,000				$121,000
Gov. Hwy. Safety Program Grant	Special Revenue (State)	31,000		$11,000	$20,000	
Parking Fines Rebate	Special Revenue (Police)	30,000	$5,000	5,000	20,000	
TOTAL		$182,000	$5,000	$16,000	$40,000	$121,000

Source: "An Operating Budget Handbook"

Sample Work Order

Date _____

Work Order No. _____

Location	Requested By: (Phone)	Priority:

Equipment Name	No.

☐ Inspect ☐ Replace ☐ Service

☐ Repair ☐ Overhaul ☐ Paint

Work Description

Work Performed/Comments

Job Estimate

Labor $ _____

Material $ _____

_____
Maintenance Superintendent

Work Record

Personnel Assigned	Manhours	Date	Work Done	Parts & Materials
Total				

Work Completed By _____ Date _____

Work Accepted By _____ Date _____

Source: EPA, "Maintenance Management Systems for Municipal Wastewater Facilities"

PREVENTIVE MAINTENANCE WORK RECORD

Equipment Name and Number: INCINERATOR NO. K

I.D. No.

Date

MPS No: 5 1 1 1 – D 1

Name of Procedure: CHECK OIL LEVEL - SIGHT FEEDER - TOP-BOTT. CENTER SHAFT

Work Completed (Signature)

Mechanic's Name	Reg Hrs	OT Hrs	Volts	Leg 1	Leg 2	Leg 3
			Amps	Leg 1	Leg 2	Leg 3
			Megohms (Corr to 75° C)			

	Trouble	OK
Was there any indication of trouble?		
Any change in operation of appearance?	☐	☐
Any difference from similar units?	☐	☐
Any broken or worn parts?	☐	☐
Any excess leaks, heat, noise, vibration?	☐	☐
Any excess dirt or corrosion?	☐	☐
Any fouling by foreign objects?	☐	☐
Was insulation resistance too low?	☐	☐
Any improvements to procedure, tools or parts?	☐	☐
Any improvements to safety precautions?	☐	☐

IF ANY TROUBLE, FILL OUT REVERSE SIDE

Form M1-5/72

Form M3, Preventive Maintenance Work Record

REPORT OF TROUBLE

Indication of Trouble		When Discovered	Cause of Trouble
☐ Broken part	☐ Dirty, fouled	☐ Starting	☐ Heat/cold/weather
☐ Worn part	☐ Voltage	☐ Stopping	☐ Humidity/moisture
☐ Heat	☐ Current	☐ During operation	☐ Foreign object
☐ Noise	☐ Resistance	☐ During PM	☐ Shock/vibration
☐ Smell	☐ Flow rate	☐ During CM	☐ Wear
☐ Vibration	☐ Pressure	☐ During MOD	☐ Equipment defect
☐ Leaking	☐ Speed	☐ During OH	☐ Improper installation
☐ Other _____		☐ Other _____	☐ Improper lubrication
			☐ Improper operation
			☐ Other _____

Remarks and Recommendations _____

Check if equipment was tagged out of service ☐

Form M1(reverse)-5/72

Form M3 (Reverse), Report of Trouble

Source: EPA "A Planned Maintenance Management System for Municipal Wastewater Treatment Plants"

DAILY UTILITY OPERATING REPORT

PLANT INFLUENT FLOW METER		RETURN SLUDGE	WASTE SLUDGE	AIR SUPPLIED
FINAL				
INITIAL	_____	_____	_____	_____
TOTAL				

GAS PRODUCED		USED	SLUDGE PUMPED	HEAT EXCHANGER TEMPERATURE	DIGESTER TEMPERATURE
FINAL				IN ____°F OUT ____°F	____°F
INITIAL	_____	_____	_____		
TOTAL					

HOUR	D. O.	CL_2 RES.

CHLORINE USED	
FINAL	
INITIAL	_____
TOTAL	
BLOWER NO. 1	
FINAL	
INITIAL	_____
TOTAL	
BLOWER NO. 2	
FINAL	
INITIAL	_____
TOTAL	

SVI	
MLSS	

REMARKS: 1ST SHIFT

DESCRIPTION	QUANTITY
SCREENINGS	
GRIT	
SCUM	

CHECKLIST			
AIR COMP.		SPRAY PUMPS	
BLOWERS		GAS COMP.	
GAS LINES		HEAT EXCH.	

AIR TEMP. ____°F

SEWAGE TEMP. ____°F

WEATHER:

OPERATOR:

DATE:

PLANT INFLUENT FLOW METER		RETURN SLUDGE	WASTE SLUDGE	AIR SUPPLIED
FINAL				
INITIAL	_____	_____	_____	_____
TOTAL				

GAS PRODUCED		USED	SLUDGE PUMPED	HEAT EXCHANGER TEMPERATURE	DIGESTER TEMPERATURE
FINAL				IN ____°F OUT ____°F	____°F
INITIAL	_____	_____	_____		
TOTAL					

HOUR	D. O.	CL_2 RES.

CHLORINE USED	
FINAL	
INITIAL	_____
TOTAL	
BLOWER NO. 1	
FINAL	
INITIAL	_____
TOTAL	
BLOWER NO. 2	
FINAL	
INITIAL	_____
TOTAL	

SVI	
MLSS	

REMARKS. 2ND SHIFT

DESCRIPTION	QUANTITY
SCREENINGS	
GRIT	
SCUM	

CHECKLIST			
AIR COMP.		SPRAY PUMPS	
BLOWERS		GAS COMP.	
GAS LINES		HEAT EXCH.	

AIR TEMP. ____°F

SEWAGE TEMP. ____°F

WEATHER:

OPERATOR:

DATE:

Source: EPA "Wastewater Utility Recordkeeping, Reporting and Management Information Systems"

DAILY LABORATORY RECORD/REPORT

GRAB SAMPLE	INFL.	Prim. Eff.	Trickler	Final		
TIME						
COLOR						
TEMP.						
pH						
Settleable Solids, ml/l.						
Dissolved Oxygen, mg/l.						
Residual Chlorine, mg/l.						

COMPOSITE, 24 hr.					
START/STOP					
COLOR					
pH					
Sett. Solids, ml/l.					
TSS, mg/l.					
VSS, mg/l.					
5-DAY B.O.D., mg/l.					
% B.O.D. Removal					
Total Phosphate, mg/l. P					
Ammonia, mg/l N					
Turbidity, NTU					
Alkalinity, mg/l. as $CaCO_3$					

DATE _____

FLOW: Max. _____ Min. _____ Total _____

Weather _____ Air Temp. _____ Precipitation _____

DIGESTER pH _____ CO_2 ____ O_2 ____ CH_4 _____

ALKALINITY _____ mg./l. as $CaCO_3$

VOLATILE ACIDS _____ mg./l. as HOAc

Sample							
% Solids							
%Volatile							
pH							

Chemical	Amt. in Storage	Amt. used/24 hr.	Dose, mg/l

AERATION TANKS

TANK	1	2	3	Average
MLTSS, mg/l				
MLVSS, mg/l				
SSV, ml/l 5 min.				
SSV, ml/l 15 min.				
SSV, ml/l 30 min.				
SSV, ml/l 60 min.				
SVI, ml/g				
cent. vol., ml.				
cent. factor				
pH				
sup. turbidity				
RSTSS, mg/l				
cent. vol., ml.				
cent. factor				
S. B. D., ft.				
Inventory, lbs.	Wasting, gal.		lbs.	MCRT

ENERGY DATA FORM

YEAR _____	ELECTRICITY					GAS		OIL		OTHER		TOTAL
Time of Day or Unit Process	KWH	$	KW	$	TOTAL $	THERMS	$	GAL.	$	UNITS	$	TOTAL $
TOTAL												

Source: EPA "Energy Management Diagnostics"

MONTHLY

PLANT PERFORMANCE REPORT

DATE	DAY OF WEEK	RAIN OR SNOW IN.	SEWAGE FLOW			BOD		TOTAL SUSPENDED SOLIDS mg/l		CHLORINATION			SETTLEABLE SOLIDS ml/l			PH		D.O. mg/l EFF.	TKN		TOTAL NITROGEN		TOTAL PHOSPHORUS	
			RATE		TOTAL					LBS.	RESIDUAL MG/l													
			MAX.	MIN.		RAW	FINAL EFF.	RAW	FINAL EFF.		A.M.	P.M.	RAW	PRIM. EFF.	FINAL EFF.	RAW	FINAL EFF.		RAW	FINAL EFF.	RAW	FINAL EFF.	RAW	FINAL EFF.
1																								
2																								
3																								
4																								
5																								
6																								
7																								
8																								
9																								
10																								
11																								
12																								
13																								
14																								
15																								
16																								
17																								
18																								
19																								
20																								
21																								
22																								
23																								
24																								
25																								
26																								
27																								
28																								
29																								
30																								
31																								

WEEK	BOD mg/l		FECAL COLIFORM PER 100 ml		EFFLUENT TURBITY OTHER OR SPECIAL ANALYSIS									SEPTIC WASTES											
	RAW	EFF.																							
1			AVE.		AVE.																				
2			AVE.		AVE.																				
3			AVE.		AVE.																				
4			AVE.		AVE.																				
5																									
AVE.																									

REMARKS: CHLORINE OR POWER OUTAGES, LOST TIME, ACCIDENTS, ETC.

Source: EPA "Wastewater Utility Recordkeeping, Reporting and Management Information Systems"

MAINTENANCE ACTIVITY REPORT

(Weekly)

WORK ORDER NUMBER	DESCRIPTION TYPE OF ACTIVITY	REQUESTED START DATE	ACTUAL START DATE	SCHEDULED COMPLETION DATE	ACTUAL COMPLETION DATE	ESTIMATED COST	ACTUAL COST

Source: EPA "Wastewater Utility Recordkeeping, Reporting and Management Information Systems"

Operating Expense Worksheet

DEPARTMENT _____ PREPARED BY _____

ACTIVITY _____ REVIEWED BY _____

Code/Object	Prior Year Expenditure	Current Year Budget	Budget Request	Budget Recom-mendation	Increase (Decrease) from Request	% Change from Current Budget
30 Transportation, Postage.	XXXX	XXXX	XXXX	XX	XX	XX
Discussion/Justification _____						
40 Utilities	XXXX	XXXX	XXXX	XX	XX	XX
Discussion/Justification _____						
50 Contracted Services	XXXX	XXXX	XXXX	XX	XX	XX
Discussion/Justification _____						

Source: "An Operating Budget Handbook"

Budget Activity Summary Worksheet

DEPARTMENT: Police
ACTIVITY: Investigation

	Prior Yr. Actual	Current Year Budget	Budget Year Request	Budget Year Recommended
No. of Positions	xx	xx	xx	xx
Funding Requirements				
Code/Object				
10 Salaries and Wages	$xxx	$xxx	$xxx	$xxx
20 Fringe Benefits	xxx	xxx	xxx	xxx
30 Travel, Transportation Postage	xxx	xxx	xxx	xxx
40 Utilities	xxx	xxx	xxx	xxx
50 Contractual Service	xxx	xxx	xxx	xxx
60 Supplies and Materials	xxx	xxx	xxx	xxx
70 Equipment	xxx	xxx	xxx	xxx
80 Miscellaneous	xxx	xxx	xxx	xxx
Funding Sources				
General Fund	xxx	xxx	xxx	xxx
Special Revenue Funds:	xxx	xxx	xxx	xxx
Department Receipts	xxx	xxx	xxx	xxx
Grant Fund	xxx	xxx	xxx	xxx

Objectives of Activity: _____

Work Plan Summary for Budget Year: _____

Significant Service and Funding Issues: _____

Source: "An Operating Budget Handbook"

APPENDIX D

FILE SPECIFICATIONS

APPENDIX D

FILE SPECIFICATIONS

The proposed financial management system for POTW's includes the development and maintenance of 21 files. The specifications for these files are addressed in this appendix and they include the following information:

1. Description of data;

2. List of accessing programs and related data retrieved for program input or entered by program output; and

3. File organization and format which includes indexing codes (access keys) and any inherent security process.

Certain terms will be used in this study in describing the components of the proposed computer-based system. These terms and their specific definitions for this study are provided below:

1. Access Keys - a unique string of alphanumeric characters defined by a predetermined coding system. These strings can be used along or in combination with other access keys to rapidly "access" specific records maintained in a file.

2. File Maintenance - the task of keeping the permanent data base updated which includes adding, deleting, or changing (adjusting) data. Usually "temporary" files are created during the updating process.

3. Temporary File - file used to accumulate data for a given period and at the end of the period (at which time the data has either been verified and entered into a specified permanent file or processed for a particular purpose) the data is deleted from the temporary file. Once utilized, it

will be initialized and recreated during the next updating or processing cycle.

The files proposed for this system were designed so that no duplication of data storage would occur. It should be noted that one file may contain several record types, each used by different programs, that were stored within the same file. These record types were determined to be of the same information category and therefore storing their data within the same file allowed for a "natural" filing system. The files designed and presented here include the following:

1. Billing (F-1)
2. Budget (F-2)
3. Customer (F-3)
4. Debt History (F-4)
5. Employee (F-5)
6. Facilities Cost (F-6)
7. Financial Indicators (F-7)
8. General Ledger (F-8)
9. Inventory (F-9)
10. Invoice (F-10)
11. Journal Entry (F-11)
12. Maintenance (F-12)
13. Operations (F-13)

14. Purchase Order (F-14)

15. Rate (F-15)

16. Revenue (F-16)

17. Service Area (F-17)

18. Subsidiary Ledger (F-18)

19. Tax (F-19)

20. Timesheet (F-20)

21. Vendor (F-21)

A. Billing File (F-1)

1. Accessing Program

- Billing (P-3) - Inputs data to selected customer accounts concerning current and previous balance, due date for current balance, payment history, and delinquency history. Retrieves control data and account data for printing statements, registers, status reports, delinquency notice, etc.

2. Access Keys

- Customer Account ID Number
- Billing Cycle Code
- Dates (such as due date and payment date)

3. Data Description

Record 1

- Number of Cycles
- Cycle Dates (or length)
- Number of Meter Books (areas)
- Meter Book ID Number and Area Name (for each meter book)

Record 2

- Customer Account ID Number
- Cycle Code
- Meter Book
- Bill Due Dates

Record 2 (Continued)

- o Codes (electricity, water, sewage, garbage)
- o Statement Update
- o Delinquency/Penalty History and Charges

B. Budget File (F-2)

1. Accessing Programs

- o General Accounting (P-1) - accesses file to post budgeted amounts (Record 2) to the appropriate accounts of the General Ledger file. This is to flag funds exceeding budgeted amounts which could lead to a budget transfer.

- o Purchasing (P-5) accesses file to obtain budgeted expenditure data (Record 2) to check if dollars are available to purchase requested items.

- o Revenue Analysis (P-11) - accesses file to retrieve estimated revenue data from current budget period or selected previous budget periods (Record 3) to compare estimated revenues with actual revenues for the same budget periods to determine the "historical ratio".

- o Expenditure Analysis (P-13) - accesses file to retrieve budget data of current and selected past periods (Records 2 and 3) to generate a report comparing these budgeted amounts to actual amounts.

- o Budget Implementation (P-14) - updates budget "policy" data (Records 1), inputs data for departmental proposed budget plans (Record 4), and maintains approved budget (Record 2).

- Cash Flow Forecasts (P-15) - accesses file to retrieve projected expenditures for specified object category and month of the budget period (Record 2) and to store cash flow projection data (refer to Record 5).

- Financial Capability Analysis (P-17) - accesses file to retrieve data on budgeted operating expenses, annual debt services, and non-operating expenses for current budget (Record 2) or for specified alternative budget plans (Record 4).

- Budget Planning (P-19) - access file to retrieve financial and manpower data of selected alternative plan (Record 2) and to enter work schedule data (Record 6).

2. Access Keys

- Policy Code Number

- Budget Period ID Number (i.e. fiscal year)

- Account Number (for retrieving data on fund type, source of revenue, major object of expenditure, and activity/department).

- Alternative Plan Number

- Department ID Number

- Cash Flow Projection Period (i.e. fiscal year)

3. Data Description

Record 1

- Policy Code Number

- Description of Data (i.e. budget period dates; review process dates, agency names, and sequence; organization classifications; budget minimums; flexible budget ranges; standard budget transfer procedure; water conservation program; capital improvement implementation schedule; and revenue use constraint data)

Record 2 (Expenditures)

- Budget Period ID Number
- Account Number
- Account Name
- Budgeted Amount

Record 3 (Revenues)

- Budget Period ID Number
- Account Number
- Account Name
- Budgeted Amount

Record 4 (Alternative Plans)

- Alternative Plan Number
- Department ID Number
- Account Number(s)
- Budgeted Amount(s)

} (Repeat for each department)

Record 5 (Cash Flow)

- Cash Flow Projection Period
- Account Number
- Historical Revenue Ratio (cash receipts/projected revenues)
- Historical Expenditure Ratio (Expenses/projected expenditures)
- Account Number (revenue and expenditures)
- Actual Account Amount
- Projected Account Amount
- Net Cash Balance

(Repeat for each account type)

Record 6 (Work Schedule)

- Budget Period ID Number
- Department ID Number
- Account Number(s)
- Budget Amount(s)
- Employee ID Number(s)
- Manpower Requirement(s)

(Repeat for each department)

C. Customer File (F-3)

1. Accessing Programs

- Billing (P-3) - Retrieves meter-reading information for each customer for generating meter-reading forms. Inputs flow readings from meters into specified customer accounts. Retrieves customer data (classification, address, water consumption, sewage flow and pollutant load) for generating customer billings.

- Service Area Analysis (P-9) - Accesses file for individual customer accounts (coordinate data of connection point and customer classification) and for customer classification data (Record 4) including annual water volume, annual sewage volume, strength loading, I/I flow volume and stormwater volume.

- Sewer Service Charge Rate Setting (P-10) - Accesses file for customer classification data (Record 4), in particular the number of customers per meter size.

- Revenue Analysis (P-11) - Accesses file to retrieve data on customer delinqency history to assist in determining the historical bad debt factor.

2. Access Keys

- Customer Account ID Number

- Customer User Classification Code

- Meter Size

- Meter Make

3. Data Description

Record 1

- Customer Account ID Number
- Name
- Mailing Address
- Service Address
- Customer User Classification (residential, commercial, industrial, institutional and governmental)

Record 2

- Customer Account ID Number
- Last Meter Reading
- Name of Meter Reader (for last reading)
- Number of Consecutive Estimates
- Previous Reading
- Projected Low Reading
- Projected High Reading
- Number of Meter Dials
- Meter Make
- Meter Number
- Meter Size (inches)
- Service Number
- Remote Meter Serial Number (if applicable)
- Meter Location (general description for meter reader and coordinate data which could represent the connection point and not the meter itself)
- Special Instructions for Reading

Record 3

- Customer Account ID Number
- Water Usage Consumption (1, 3, 5 Year History)
- Sewage Flow Generation (1, 3, 5 Year History)
- Pollutant Load History (for industries or commercial customers only)

Record 4

- Customer User Classification
- Number of Customers/Meter Size (and per billing cycle)
- Number of Customers/Bills Rendered
- Annual Water Volume
- Annual Sewage Volume

- o Strength Loadings
- o I/I Flow Volume
- o Stormwater Volume

D. Debt History File (F-4)

1. Accessing Programs

   - o Budget Implementation (P-14) - accesses file to retrieve data from Record 1 to project long-term indebtedness payable and maturities by fiscal year. Results are then stored in Record 2.

   - o Financial Capability Analysis (P-17) - accesses file to update Record 3 with data for each proposed alternative plan and to retrieve from Records 1 and 2 bond rating data, present outstanding debt, the total overall debt, overall net debt, direct net debt outstanding, overall net debt outstanding and direct net debt due within five years.

2. Access Keys

   - o Year or Budget Period

   - o Issue Number

   - o Alternative Plan Number

   - o Debt Code

3. Data Description

   Record 1

- Issue Number (includes issue date)
- Debt Code (bonded, leases, unfunded pension liabilities and notes)
- Final Maturity Date
- Original Average Life
- Effective Interest Rate on Sale Date
- 20-Bond Yield Index Nearest Sale Date
- Annual Interest
- Annual Principal
- Principal Balance Outstanding

Record 2

- Calendar Year (or budget period)
- Total Annual Debt Service Requirements (for all bonds)
- Total Amount Outstanding (for all bonds)
- Revenue Available for Debt Service
- Times Debt Service
- Rating Data (type of bond rating, rating value, and date of rating)

Record 3

- Alternative Plan Number
- Budget Period
- Total Funding Amount

E. Employee File (F-5)

1. Accessing Programs

- Payroll - Personnel Records (P-4) - updates employee personnel records (Record 1) employee payroll records (Record 2) and retrieves data to generate various management reports.

- Performance Analysis (P-18) accesses file to retrieve data (number of employees: total, for specified department, and/or for specified specialty) on staffing limitations for evaluating workload capabilities.

- Budget Planning (P-19) - accesses file to retrieve manpower data (number of employees for each department for all specialties to generate a work schedule for the selected alternative plan.

2. Access Keys

- Employee ID Number
- Name
- Department ID Number
- Specialties Code
- Education Code
- Date of Hire

3. Data Description

<u>Record 1</u>

- Employee ID Number
- Name
- Address
- Phone Number
- Social Security Number
- Birth Date

- Race
- Sex
- Citizenship
- Disability Date
- Marital Status
- Military Status
- Years of Experience
- Previous Employer Name
- Emergency Contact Information (name, phone number, relationship)
- Date of Hire/Rehire
- Date of Termination
- Education Code/Data
- Certification/Registration Code/Data
- Specialties Code/Data
- Department ID Number

Record 2

- Employee ID Number
- Hourly Rate
- Salary
- Current Pay and Deductions
- Monthly Pay and Deductions
- Quarterly Pay and Deductions
- Yearly Pay and Deductions
- Leave Data
- Timesheet Data

Record 3

- Employee ID Number
- Gross Pay
- FICA Wages
- Federal Tax

- o FICA Tax
- o State Tax
- o Local Tax

F. Facilities Cost (F-6)

1. Accessing Programs

- o Annual Replacement Reserve (P-7) - updates the replacement cost values in Record 2.

- o Revenue Requirements (P-8) - updates all cost of service values and non-use revenue amounts for actual conditions (from accounting records) and for the selected budget (from the budget file, F-2).

- o User Charge Rate Setting (P-10) - accesses file to retrieve values for cost of service items to determine revenue requirements for selected alternative plans.

- o Financial Capability Analysis (P-17) - accesses file to retrieve and update values for cost of service items to determine total construction and O&M cost estimates for various alternative plans and total funding for annual costs.

2. Access Keys

- o Cost of Service Code
- o Alternative Plan Number

3. Data Description

Record 1

- o Cost of Service Code
- o Cost of Service Description
  - O&M Costs (collection system, pumping system, treatment system, accounting and collection expenses, administration expenses, transportation equipment, etc.)
  - Debt Service Requirement
  - Replacement Costs
  - Taxes, Payment in Lieu of Taxes
  - Contributions to Other Departments
  - Appropriations for Major Improvements
  - Income Availabile for Return
- o Non-Use Revenue Code
- o Non-Use Revenue Description

Record 2

- o Alternative Plan Number (equal to zero for existing conditions)
- o Cost of Service Code } (Repeat for each cost
- o Cost Amount } of service item)
- o Non-Use Revenue Code } (Repeat for each non-
- o Non-Use Revenue Amount } use revenue item)
- o User Charge Revenue Amount (total or by cost of service code)

G. Financial Indicators (F-7)

1. Accessing Program

- o Financial Capability Analysis (P-17) - updates Record 1 for specified plans using data from the facilities

cost file (F-6), the revenue file (F-16) and the service area file (F-17); - updates Record 2 for specified plans; and updates Record 3 for specified plans using data from the debt history file (F-4) and updates Record 4, the indicator rating table, for generating reports using the financial indicator values of Record 2.

2. Access Keys

- o Alternative Plan Number
- o Indicator Number

3. Data Description

Record 1

- o Alternative Plan Number (equal to zero for existing conditions)
- o Total Construction Costs
- o Total Operation, Maintenance, and Replacement Costs
- o Amount to be Borrowed
- o Annual Debt Service Payment
- o Total Estimated Annual Wastewater Facilities Costs
- o Total Funding
- o Annual Cost Per Household
- o Median Household Income
- o Total Annual Costs per Household (as % of median household income)

Record 2

- o Alternative Plan Number (equal to zero for existing conditions)

- Indicator Number
- Description
- Value

(Repeat for each indicator)

Record 3

- Alternative Plan Number (equal to zero for existing conditions)
- Bond Ratings (includes date of rating)
- Outstanding Debt (includes type of debt and amount outstanding)
- Debt Repayment Schedule
- Debt limits
- Percentage of Debt Limit Used

Record 4

- Indicator Number
- Weak Rating Value Range
- Average Rating Value Range
- Strong Rating Value Range

(Repeat for each indicator)

H. General Ledger File (F-8)

1. Accessing programs

- General Accounting (P-1) - updates descriptive data for accounts maintained in the utility's general ledger file and updates all financial data (posts transaction amounts and budget amounts to the appropriate accounts).

- Revenue Analysis (P-11) - accesses file to retrieve data for actual revenues received, month-to-date and year-to-date, to assist in modifying estimated cost recovery amount by a percent factor that reflects the

accuracy of previous estimates in comparison to actual data.

- o Expenditure Analysis (P-13) - accesses file to retrieve current (to-date) and historical financial records for budgeted accounts to generate an operating budget report with both actual and budgeted data and the variance amount and percent.

- o Cash Flow Forecasts (P-15) - accesses file to retrieve data for current expenses.

2. Access Keys

- o Date (month, quarter, year) or Accounting Period
- o Account Number

3. Data Description

- o Account Number
- o Account Name
- o Opening Balance
- o Year (or accounting/budget period)
- o First Month Activity
- o Second Month Activity
- o Third Month Activity

  -

  -

  -

- o Final Month Activity
- o Current Balance
- o Budget Amount
- o Encumbrances
- o Unencumbered Balance

I. Inventory (F-9)

As stated in Chapter III (Section B.1) the backbone of an efficient computer-based inventory system is a carefully planned alphanumeric coding system. This system should:[3]

- o Specity the physical area where the item or equipment is located (i.e. dewatering building, laboratory, and administration buildings)
- o Identify the type of equipment (i.e. pump, truck, and meter); and
- o Identify a specific process unit (i.e. secondary clarification, chlorination, and sludge digestion)

In implementing a coding system and developing a file, the utility manager should:[3]

- o Decide what constitutes a unit of equipment;
- o Discuss coding system with accounting personnel;
- o Perform a physical inventory of all items to be included in the file; and
- o Review the manufacturers' manuals for each equipment type.

1. Accessing Programs

   - o General Accounting (P-1) - accesses file to retrieve purchase cost data and annual depreciation charge (or accumulated depreciation value).

(3) Thompson, William B., "Setting Up a Simplified P-M Program," WATER/Engineering & Management, January, 1983.

- Facilities Inventory (P-2) - initiates records (Records 1, 2, 3) for new inventory items, updates coding schedule (Record 4), and updates stock item quantities (Record 3). Also accesses file to generate reorder notices and inventory reports.

- Equipment Life and Depreciation (P-6) - accesses file to retrieve estimated service life, salvage value, purchase cost and purchase date for specific items and inputs updated depreciation values (accumulated and/or annual charge).

- Annual Replacement Reserve (P-7) - accesses file to retrieve depreciation data (by line-item or for individual equipment) to generate annual replacement reserve report.

- Operations Performance (P-12) - accesses file to retrieve maintenance procedure data, including frequency, for specified items.

2. Access Keys

   - Item Code

   - Vendor Code

3. Data Description

   Record 1 - Fixed Assets

   - Item Code
   - Descriptive Name
   - Date of Installation
   - Purchase Cost

- Vendor Code (or name)
- Capital Project Number
- Assessment Value
- Date of Assessment
- Accumulated Depreciation
- Estimated Service Life
- Annual Depreciation Charge
- Estimated Salvage Value

Record 2 - Machinery/Equipment

- Item Code
- Descriptive Name
- Nameplate Data
- Maintenance Procedures (includes frequency)
- Spare Parts List
- Date of Purchase
- Purchase Cost
- Vendor Code (or name)
- Accumulated Depreciation
- Estimated Service Life
- Annual Depreciation Charge
- Estimated Salvage Value

Record 3 - Stock Items

- Item Code
- Descriptive Name
- Quantity On Hand
- Vendor Code (and associated purchase dates)
- Minimum Quantity On Hand
- Maximum Quantity on Hand
- Reorder Point
- Issue Unit
- Purchasing Lead Time
- Cost (unit of quantity)

Record 4 - Coding Schedule

- o Number of Sets (group of digits or letters) per Item Code
- o Set 1
- o Description
- o Set 2
- o Description

  -

  -

  -
- o Last Set
- o Description

J. Invoice (F-10)

1. Accessing Programs

   - o Purchasing (P-5) - updates all data in invoice file by manual input to automatically update the accounts payable register and the invoice ledger (refer to subsidary ledger file, F-18).

2. Access Keys

   - o Invoice Number
   - o Purchase Order Number
   - o Receiving Slip Number
   - o Date
   - o Vendor Name

3. Data Description

Record 1

- o Invoice Number
- o Date (month, day, year)
- o Terms
- o Vendor Number
- o Purchase Order Number
- o Receiving Slip Number
- o Salesman
- o Shipped Via (description)
- o Item Number
- o Description
- o Quantity
- o Unit Price
- o Unit Type
- o Amount

(Repeat for each item type)

- o Total Invoice Amount
- o Check Number

K. Journal Entry File (F-11)

1. Accessing Programs

- o General Accounting (P-1) - enters all financial transaction data (Record 1) for the accounting system through this file and updates the Chart of Accounts descriptive data (Record 2).

- o Customer Billing (P-3) - provides accounts receivable data from customer billing activities for the general accounting program (P-1).

- Payroll - Personnel (P-4) - provides accounts payable data from payroll activities for the general accounting program (P-1).

- Purchasing (P-5) - provides accounts payable data from purchasing activites for the general accounting program (P-1).

- Revenue Analyses (P-11) - accesses file for cost data on cash receipts.

2. Access Keys

   - Account Number

   - Date

3. Data Description

   Record 1

   - Account Number
   - Date
   - Journal Source (adjustment, cash payment, cash receipt, journal entry, transfer, transaction, accounts payable)
   - Purchase Order Number
   - Invoice Number
   - Check Number
   - Discounts
   - Description
   - Posted Indicator (posted to ledgers, yes or no)
   - Debit/Credit Indicator
   - Dollar Amount

Record 2 (This record is the description of the Chart of Accounts)

- o Fund Number
- o Fund Description
- o Revenue Source Number
- o Revenue Source Description
- o Object of Expenditure Number
- o Object of Expenditure Description
- o Activity/Department Number
- o Activity/Department Description
- o Account Type Number
- o Accounty Type Description
- o Account Number (selected combination of above numbers)
- o Account Description

L. Maintenance File (F-12)

1. Acessing Programs

   - o Operations Performance (P-12) - updates file with: data for new inventory items from the inventory file, F-9; completed maintenance data from work order summaries and maintenance logs; and schedule data from the inventory file, F-9, and maintenance schedules. Also generates data concerning maintenance activity status and equipment repair history and enters it into the file.

   - o Performance Analysis (P-18) - accesses file to retrieve data on maintenance schedules to determine current workload.

2. Access Keys

- Equipment Code (same as item code in F-9)
- Date
- Work Order Number

3. Data Description

Record 1 - Maintenance Work Scheduled

- Date (week ending MM/DD/YY)
- Equipment Code
- Description of Maintenance
- Safety Precautions
- Tools, Parts, Material, Test Equipment
- Maintenance Procedures
- Average Time and Skill Level
- Day of Week

(Repeat for each equipment)

Record 2 - Work Orders

- Work Order Number
- Date (intiated and completed)
- Equipment Code
- Type of maintenance (preventive, corrective, emergency)
- Work Performed/Comments
- Personnel Assigned
- Labor (manhours and costs)
- Materials and Parts (amount and costs)

M. Operations File (F-13)

1. Accessing Programs

- Operations Program (P-12) - updates NPDES standards maintained in Record 1 and operations data in Record 2 which includes monitoring and laboratory data. Also

  accesses this data to print operations reports and summary and statistical/trend analysis reports and store results in Record 6.

- Performance Ranking of Alternative Budget Plans (P-24) - updates units of work data in Record 3 and plant configuration data in Record 4. Also accesses this data for diagnostic modeling operations and stores results in Record 5.

2. Access Keys

   - Date

   - Process Unit Number (for process units such as primary clarification, sludge digestion, and chlorination)

   - Equipment Code (same as item code in F-9)

   - Alternative Plan Number

   - Parameter Type (flow, BOD, SS, DO, etc.)

3. Data Description

   Record 1 - Performance Standards

   - NPDES standards (effluent characteristics or efficiency removals)

   Record 2 - Monitored Performance Data

- Date
- Equipment Code (for monitoring equipment such as rain gages, flow meters, and D.O. probes)
- Reading
- Unit (such as inches, cfs, and lbs.)

(Repeat for each piece of equipment)

- Process Unit
- Parameter (and unit)
- Reading

(Repeat for each laboratory test)

Record 3 - Units of Work

- Alternative Plan Number (equal to zero if existing conditions)
- Process Unit Number
- Performance Unit (such as gallons of wastewater treated, volume of sludge generated, and gallons of water pumped)
- Number of Work Units
- Total Costs of Operations (includes energy, chemicals, and manpower)
- Manhour Requirements

(Repeat for each process)

Record 4 - Plant Configuration

- Alternative Plan Number (equal to zero if existing conditions)
- Process Unit Number
- Number of Structures
- Dimensions of Structures

(Repeat for each process)

Record 5 - Modeling Results

- Alternative Plan Number (equal to zero if existing conditions)
- Plant Influent Characteristics
- Process Unit Number } (Repeat for each process)
- Influent and Effluent Characteristics } (Repeat for each process)

Record 6 - Statistic Results

- Parameter Type
- Value } (Repeat for all values analyzed)
- Date/Time } (Repeat for all values analyzed)
- Percent of Values Greater than Standard
- Standard Value (NPDES, State or user selected)
- Treatment Removal Efficiency } (When applicable)
- Loading Rate } (When applicable)
- Statistical Values (includes average, variance, standard, deviation, etc.)
- Regression Results

N. Purchase Order File (F-14)

1. Accessing Programs

   - Purchasing (P-5) - initiates a record for new purchase orders by entering descriptive data into the file.

   - Facilities Inventory (P-2) - updates file upon receipt of new inventory items and initiates a record for a new purchase order upon generation of a reorder notice.

2. Access Keys

   - Purchase Order Number

   - Reorder Notice Number

- o Work Order Number
- o Dates (initiated and required)
- o Vendor Number

3. Data description

Record 1

- o Purchase Order Number
- o Work Order Number
- o Reorder Notice Number
- o Dates (initiated and required)
- o Terms
- o Vendor Number
- o Item Number
- o Description
- o Quantity
- o Unit Price
- o Unit Type
- o Amount

(Repeat for each item type)

- o Total P.O. Amount
- o P.O. Preparer Name
- o P.O. Approval (name and date)
- o Date Item(s) Received (either date of receiving slip or invoice)

O. Rate File (F-15)

1. Accessing Programs

- o User Charge Rate Setting (P-10) - updates code descriptions maintained in Record 1; cost allocation factors maintained in Records 2, 3 (cost of service

data is retrieved from Facilities Cost File for Record 3), and 4 and maintains schedule data in Record 5.

- Revenue Analysis (P-11) - accesses file to retrieve data from Record 5 for actual or proposed user charge rates.

2. Access Keys

- Schedule Code (A, B, C)
- Customer Type Code
- Cost Function Code
- Cost of Service Code
- Alternative Plan Number

3. Data Description

<u>Record 1</u>

- Cost Function Code
- Cost Function Description (base, extra-capacity, extra-strength, or customer)
- Cost of Service Code
- Cost of Service Description (such as collection system, pumping system, customer billing, treatment system, etc.)
- Customer Type Code
- Customer Type Description (such as residential, commercial, industrial, or public)

<u>Record 2</u>

- Cost Function Code
- Extra-Capacity Factors (average, hour, and peak day)
- Extra-Strength Factors (for all parameters)

Record 3

- Cost of Service Code
- Total Costs
- Cost Function Code
- Allocation Factor (percent of total costs assigned to cost function)

(Repeat for each cost function type)

Record 4

- Customer Type Code
- Annual Flow (total, average rate, and percent)
- Extra-Capacity and Strength (percent factor and rate)
- Equivalent Meter/Billing Factors
- Customer Responsibility Factor

(Repeat for each customer type)

Record 5

- Alternative Plan Number (equal to zero for actual rate schedules)
- Schedule A
- Title ("Cost Function Allocation Breakdown")
- Cost of Service Code
- Cost Function Code
- Allocated Cost Amount
- Schedule B

(Repeat for each cost of service type)

- Title ("Customer Class Responsibility Distribution")
- Customer Classification
- Cost Function Type
- Allocated Cost Amount

  (Repeat for each customer user class)
- Schedule C
- Title ("Sewer Service Rate Schedule")
- Block Number
- Level of Customer Flows
- Sewer Service Charge Rate/1000 Gallons

P. Revenue File (F-16)

1. Accessing Programs

- Revenue Requirements (P-8) - accesses file to update and retrieve data on "non-use revenue", Record 1.

- Revenue Analysis (P-11) - updates cost recovery amount data for specified alternative plans in Record 2.

- Cash Flow Forecasts (P-15) - accesses file to retrieve data from Records 1 and 2 to project revenues for a selected alternative plan and specified months in the accounting period.

- Financial Capability Analysis (P-17) - accesses file to retrieve data from Record 1 to determine "Grantee Contributions" for financing a selected alternative plan; to retrieve data from Record 2 to determine the "residential share" of costs of services (cost recovery amount); and to retrieve data from both Records 1 and 2 to determine operating revenues and nonoperating revenues.

2. Access Keys

- o Non-Use Revenue Code (for revenues from general property taxes, special assessments, interest, connection fees, etc.)

- o Alternative Plan Number

3. Data Description

Record 1 - Non-Use Revenue

- o Alternative Plan Number (equal to zero for existing conditions)
- o Month
- o Non-Use Revenue Code
- o Description
- o Value of Income

(Repeat for each non-use revenue type and month of accounting period)

Record 2 - User Revenue

- o Alternative Plan Number (equal to zero for existing condition/selected plan)
- o Month
- o Customer Type
- o "Base" Cost Recovery Amount
- o "Predicted Lost" Amount
- o Total Cost Recovery Amount
- o Correction Factor
- o Modified Total Cost Recovery Amount

(Repeat for each customer type and month of accounting period)

Q. Service Area File (F-17)

1. Accessing Programs

- o Service Area Analysis (P-9) - updates data in Records 1, 2, and 3 and accesses them to generate flow summary reports and industrial waste reports.

- Sewer Service Charge Rate Setting (P-10) - accesses file to retrieve data for specified service areas (Record 3) to assist in determining customer characteristics.

- Revenue Analysis (P-11) - accesses file to retrieve flow data (Record 6) for determining the projected per capita flow and industrial flow of a specified service area.

- Populations Statistics (P-16) - updates population and income data for Records 4 and 5.

- Financial Capability Analysis (P-17) - accesses file to retrieve industrial flow data (record 2), to retrieve data on the number of households and the median household income (Records 4 and 5) of the service area(s) and to retrieve population data from Record 4 to determine Indication 1 (Population Charge), Indicator 7 (Direct Net Debt Outstanding per Capita), and Indicator 8 (Overall Net Debt Outstanding Per Capita).

- Performance Analysis (P-18) - accesses file to retrieve industrial flow data (Record 2) and to retrieve population data from Record 4 and per capita flow data from Record 3 to determine service level values which are then stored in Record 6.

2. Accessing Keys

- Equipment Code (same as Item Code in F-9)

- Service Area Code (or ID Number)

- Industry ID Number

- Dates

- Census Tract Number

3. Data Description

Record 1 - Flow Data

- Equipment Code
- Description (such as meter, pumping station or overflow/bypass)
- Location (includes coordinate values)
- Meter Type
- Service Area Codes(s)
- Service Area Flow Factor(s)
- Reading Date } (Repeat for each reading)
- Meter Reading } (Repeat for each reading)

Record 2 - Industrial Flow/Strength Data

- Industry ID Number
- Description and Name
- Location (includes coordinate values)
- SIC Code
- Service Area Code(s)
- Parameter Code(s)
- Estimated Discharge Rate
- Sampling Dates } (Repeat for each parameter and each sampling)
- Parameter Code } (Repeat for each parameter and each sampling)
- Parameter Sampling Value } (Repeat for each parameter and each sampling)

Record 3 - Service Area Boundary Data

- Service Area Code
- Boundary Coordinates

- Total Area (acres)
- Land Use Code(s) (with associated acreage)
- Quarter (1,2,3, or 4)
- Year
- Maximum Daily Sewage Flow Value
- Peak Hourly Sewage Flow Factor
- Infiltration/Inflow Factor
- Average Daily Sewage Flow Value
- Residential Per Capital Flow Values
- Commercial/Industrial Per Acre Flow Value

Record 4 - Population

- Census Tract Number
- Date (month and year)
- Population
- Number of Households
- Service Area Code
- Allocation Factor
- Population Value

(Repeat for each service area)

Record 5 - Income

- Census Tract Number
- Median Household Income (or median family income)
- Date (month and year)
- Consumer Price Index
- Service Area Code
- Allocation Factor
- Income Value

(Repeat for each service area)

Record 6

- Service Area Code
- Date (hydrograph range)

- o Flow Rate Hydrograph
- o Pollutant Concentration Pollutograph

R. Subsidiary Ledger File (F-18)

1. Accessing Programs

   - o General Accounting (P-1) - updates descriptive data for accounts maintained in the subsidiary ledger file and updates all financial data (posts transaction amounts and budget amounts to the appropriate ledger accounts).

   - o Revenue Requirements (P-8) - accesses file to retrieve data for operations and maintenance costs; interest, principal, and stipulated reserves of debt service, replacement reserve, and capital outlay.

   - o Financial Capability Analysis (P-17) - accesses file to retrieve cost data for interest paid, repayments, excess plan/design cost and cost incurred for issuance and sale of bonds for all capital projects and cost data for existing annual operations and maintenance activities and discontinued operations and maintenance activities.

2. Access Keys

   - o Subsidiary Ledger ID Number

   - o Account Number

   - o Date (month, quarter, year) or Budget Period

3. Data Description

Record 1

- o Subsidiary Ledger ID Number
- o Subsidiary Ledger Descriptive Name (includes accounts payable, accounts receivable, fixed assets, etc.)

Record 2

- o Subsidiary Ledger ID Number
- o Account Number
- o Account Name
- o Opening Balance
- o First Month Activity
- o Second Month Activity
- o Third Month Activity
  - -
  - -
- o Final Month Activity
- o Current Balance
- o Budget Amount
- o Encumbrances
- o Unencumbered Balance

S. Tax File (F-19)

1. Accessing Programs

   - o Payroll - Personnel (P-4) - updates all tax data for both Records 1 and 2 and retrieves data from Record 2 to produce Payroll Deduction Register, Social Security Report and W-2 forms.

2. Access Keys

   - o Employee Number

- o Employee Name

- o Pay Period

3. Data Description

Record 1

- o Employee Number
- o Employee Name
- o Federal Tax Status
- o State Tax Status
- o Local Tax Status
- o Occupational Tax Status
- o Voluntary Deduction Status (i.e. credit union and United Way)

Record 2

- o Pay Period
- o Employee Number
- o Tax Amounts
- o Voluntary Deduction Amounts
- o W-2 Data

(Repeat for each employee)

T. Timesheet File (F-20)

1. Accessing Program

- o Payroll - Personnel (P-4) - accesses file (along with employee file, F-5) to generate management reports such as a timesheet summary report, performance evaluation report, etc.; to input all timesheet data (regular hours, overtime, vacation time, sick leave, etc.) for each employee (Record 2) to generate

paychecks and to maintain employee records for alloted vacation time and sick leave (Record 1).

2. Access Keys

- o Employee Number
- o Pay Period
- o Dates
- o Activity Code (or subdepartment number)

3. Data Description

Record 1

- o Employee Number
- o Years of Service
- o Pay Period
- o Accrued Vacation Time
- o Accrued Sick Leave

Record 2

- o Employee Number
- o Pay Period
- o Date
- o Regular Hours and Activity Code
- o Overtime Hours and Activity Code
- o Sick Leave
- o Vacation Time
- o Miscellaneous Time

(Repeat for each day)

U. Vendor File (F-21)

1. Accessing Programs

   - Facilities Inventory (P-2) - updates file (change of address, service rating, point of contact, etc.) upon receipt of inventory items using receiving slip information or other general sources (such as salesman).

   - Purchasing (P-5) - initiates both Records 1 and 2 of the file with vendor information during generation of purchase orders.

2. Access Keys

   - Vendor Number

   - Vendor Name

   - Equipment Product Code(s)

3. Data Description

   Record 1

   - Vendor Number
   - Vendor Name
   - Payment Address
   - Phone Number
   - Point of Contact
   - Equipment Product Code(s)
   - Service Rating
   - Cost Rating

   Record 2

- Equipment Product Code
- Equipment Type
- Manufacturer Type

APPENDIX E

OUTPUT DOCUMENT SPECIFICATIONS

APPENDIX E

OUTPUT DOCUMENTS

List of Figures

(Applicable Program in Parentheses)

	PAGE
Cash Receipts Journal (P-1)	E-1
Cash Payment Journal (P-1)	E-1
Accounts Payable Journal (P-1)	E-2
Accounts Receivable Journal (P-1)	E-2
Purchases Journal (P-1)	E-2
General Journal (P-1)	E-3
Sample Daily Cash Report (P-1)	E-4
Accounts Receivable Subsidiary Ledger (P-1)	E-5
Plant Asset and Accumulated Depreciation Subsidiary Ledger Card (P-1)	E-5
Balance Sheet (P-1)	E-6
Income Statement (P-1)	E-7
Statement of Retained Earnings (P-1)	E-7
Statement of Revenues, Expenses and Charges in Retained Earnings (P-1)	E-8
Revenues Report (P-1)	E-9
Inventory Stock Record (P-2)	E-10
Inventory History Data (P-2)	E-11
Lead Time Report (P-2)	E-12
Stock Status Report (P-2)	E-13
Multiple Warehouse Report (P-2)	E-14
Individual Customer Meter Reading Log (P-3)	E-15
Billing Statement with Payment Stub (2 samples)(P-3)	E-16
Summary Employee Profile Report (P-4)	E-17
Employee Compensation Record (P-4)	E-18
Payroll Register (P-4)	E-19
Employee Timesheet Sumary Report (P-4)	E-20

APPENDIX E

OUTPUT DOCUMENTS

List of Figures

(Continued)

	PAGE
Sample Purchase Order (P-5)	E-21
Schedule of Bills (P-5)	E-22
Service Life Schedule (P-6)	E-23,E-24
Annual Depreciation Schedule and Annual Reserve Requirement(P-7)	E-25,E-26
Revenue Requirement Report (P-8)	E-27
Sewer Service Rate Schedule (P-10)	E-28
Statement of Actual and Estimated Revenues (P-11)	E-29
History of Repairs Card (P-12)	E-30
Work Load/Accomplished Summaries (P-12)	E-31
Statement of Actual and Budgeted Expenditures and Encumbrances, by Department/Activity (P-13)	E-32
Summary Statement of Actual and Budgeted Expenditures and Encumbrances (P-13)	E-33
Typical Wastewater Utility Line Item Budget (P-14)	E-34
Debt Service Requirements and Coverage Report (P-14)	E-35
Outstanding Indebtedness Report (P-14)	E-36
Wastewater Treatment Utility Activity Budget (P-14)	E-37
Structure of an Annual Operating Budget (P-14)	E-38
Cash Flow Forecast (P-15)	E-39
Cash Flow Results andForecast (P-15)	E-40
Wastewater Facilities Financial Information Sheet (P-17)	E-41,E-42
Supplemental Information Sheet (P-17)	E-43
Energy Cost and Consumption Report (P-18)	E-44

CASH RECEIPTS JOURNAL

Date		Explanation	Debits: Cash	Debits: Sales Discount	Debits: Other Accounts: Account Title	Debits: Other Accounts: F	Debits: Other Accounts: Amt.	Account Credited	Credits: Accounts Receivable: ✓	Credits: Accounts Receivable: Amt.	Credits: Sales	Credits: Other Accounts: F	Credits: Other Accounts: Amt.
1983													
Jun.	1	Investad .n Business	:..500					J. Co:', Capital					2,500
	10	Payment in full	588	12				F. P. Allen	✓	600			
	15	Cash sales	1,000					Sales			1,000		
	17	Payment in full	392	8				S. Lloyd	✓	400			
	22	Borrowed from bank	600					Notes Payable					600
	30	Cash sales	950					Sales			950		
	30	Payment on account	100		Notes Receivable		200	Linda Weavil	✓	300			
	30	Totals	6,130	20			200			1,300	1,950		3,100

CASH PAYMENTS JOURNAL

Date		Check No.	Explanation	Credits: Cash	Credits: Purchases Discounts	Credits: Other Accounts: Account Title	Credits: Other Accounts: F	Credits: Other Accounts: Amt.	Account Debited	Debits: Accounts Payable: ✓	Debits: Accounts Payable: Amt.	Debits: Purchases	Debits: Other Accounts: F	Debits: Other Accounts: Amt.
1983														
Jun.	1	1	June rent	150					Rent Expense					150
	10	2	Payment in Full	882	18				Comfort Knit Co.	✓	900			
	14	3	Payment in Full	392	8				Denim Moderns	✓	400			
	15	4	Cash Purchases	200					Purchases			200		
	30	5	Partial Payment	300		Notes Payable		200	Casual Clothiers	✓	500			
	30	6	Withdrawal of cash	400					J. Cox, Drawing					400
	30	7	Various items	100					Misc. General Exp.					100
	30		Totals	2,424	26			200			1,800	200		650

Source: Reynolds, Slavin, Sanders "Elementary Accounting"

ACCOUNTS PAYABLE JOURNAL

Date		Account Credited	Terms	F	Amount

ACCOUNTS RECEIVABLE JOURNAL

Date		Account Debited	Terms	F	Amount

PURCHASES JOURNAL Page 1

Date		Account Credited	Terms	F	Amount
1983					
Jun.	3	Comfort Knit Company	2/10,n/20	✓	900
	8	Denim Moderns	2/10,n/60	✓	400
	16	Casual Clothiers	3/5, n/30	✓	500
	28	Baxter Tailors	1/20,n/60	✓	700
	30	Total			2,500
					(351)(201)

GENERAL JOURNAL

Page 1

Date 1983	Debit-Credit-Account Titles: Explanation	F	Debit	Credit
Jan. 3	Cash:	'C'	30000.00	
	Thomas Joy, Capital	301		30000.00
	To record investment by			
	proprietor to start a business			
	to be called Good Times Wheels			
	Repair Shop.			
4	Rent Expense-Shop Building	501	300.00	
	Cash	101		300.00
	To record payment of rent on			
	shop building for month of			
	January 1983; issued check no. 1.			
5	Rent Expense-Automotive Tools and			
	Equipment	502	80.00	
	Cash	101		80.00
	To record payment of rent for			
	automotive tools and equipment			
	for month of January 1983;			
	issued check no. 2.			
5	Motorcycle Parts and Supplies	131	400.00	
	Accounts Payable	201		400.00
	To record purchase of parts and supplies			
	on account on invoice no. 306:			
	Southern Supply Company ✓ $400.00			

Source: Reynolds, Slavin, Sanders "Elementary Accounting"

Sample Daily Cash Report

(Governmental Unit)

DAILY CASH REPORT FOR _____

DATE	RECEIPTS	CASH BALANCE	DISBURSEMENTS

Source: EPA "Wastewater Utility Recordkeeping, Reporting and Management Information System"

ACCOUNTS RECEIVABLE SUBSIDIARY LEDGER

Jay Munson

Date 1983	Explanation	F	Debit	Credit	Balance
Jan. 26		2	180.00		180.00
	Balance is a debit				

ACCOUNTS PAYABLE SUBSIDIARY LEDGER

Delco Supply House

Date 1983	Explanation	F	Debit	Credit	Balance
Jan. 29		2		250.00	250.00
	Balance is a credit				

PLANT ASSET AND ACCUMULATED DEPRECIATION
SUBSIDIARY LEDGER CARD

ITEM Accounting Machine PRIMARY ACCOUNT CLASSIFICATION Office Furniture and Equipment
DESCRIPTION Excelsior, Model 140 FROM WHOM ACQUIRED Excelsior Company
SERIAL NUMBER R-1734 ESTIMATED SERVICE LIFE 10 years
WHERE LOCATED OR STORED Office COST $2,000.00
PERSON RESPONSIBLE FOR ASSET Office Manager SALVAGE VALUE $200.00 (10%)
DEPRECIATION RATE (YEAR) $180.00 (9%) (MONTH) $15.00 (0.75%)

Date	Description	Asset Account			Accumulated Depreciation			Net Book Value
		Dr.	Cr.	Bal.	Dr.	Cr.	Bal.	
July 1, 1964	Purchase of Asset	$2,000.00		$2,000.00				$2,000.00
Dec. 31, 1965	Annual Depreciation					$ 90.00	$ 90.00	1,910.00
Dec. 31, 1966	Annual Depreciation					180.00	270.00	1,730.00
Dec. 31, 1967	Annual Depreciation					180.00	450.00	1,550.00

New Haven Water Company
Balance Sheet*

ASSETS	December 31 1977	1976
UTILITY PLANT — at original cost — Notes C and N		
Organization	$ 88,392	$ 88,392
In service	107,862,139	102,222,854
Held for future use	97,668	97,668
	108,048,199	102,408,914
Less allowance for depreciation	30,603,604	28,662,876
	77,444,595	73,746,038
Construction work in progress	3,543,678	1,260,837
	80,988,273	75,006,875
INVESTMENTS — at cost		
Physical property — other than Utility Plant	472,160	395,850
Less allowance for depreciation	124,086	119,117
	348,074	276,733
Other	13,818	11,310
	361,892	288,043
CURRENT ASSETS		
Cash — Note D	2,077,242	2,282,578
Accounts receivable	3,633,428	3,387,683
Accrued water revenue — Note J	2,384,725	1,767,090
Allowance for uncollectible accounts	(250,000)	(220,000)
Materials and supplies	367,084	395,236
Municipal taxes (1977—$2,679,319; 1976—$2,624,864) and prepayments	2,985,975	2,902,895
	11,198,454	10,515,482
DEFERRED CHARGES		
Unamortized debt discount and expenses	289,755	306,023
Preliminary engineering and survey	172,148	225,611
Other	227,125	109,054
	689,028	640,688
	$ 93,237,647	$ 86,451,088
CAPITALIZATION AND LIABILITIES		
CAPITALIZATION — Notes B and C		
Common Stockholders' Equity:		
Common Stock	$ 13,200,000	$13,200,000
Premium on Common Stock	1,764,244	1,764,244
Retained earnings	8,074,105	7,518,502
	23,038,349	22,482,746
Cumulative Preferred Stock	8,000,000	5,000,000
Long-term debt	36,066,000	36,066,000
	67,104,349	63,548,746
CURRENT LIABILITIES (Exclusive of notes payable to banks)		
Accounts payable and accrued expenses	1,340,573	1,185,136
Dividend payable	443,520	443,520
Federal income taxes payable — Note G	717,623	915,900
Other taxes payable	5,697,654	6,405,534
Accrued interest	907,541	906,003
	9,106,911	9,856,093
NOTES PAYABLE TO BANKS EXPECTED TO BE REFINANCED — Note D	3,100,000	500,000
Total Current Liabilities	12,206,911	10,356,093
DEFERRED CREDITS		
Customers' advances for construction	5,153,383	4,677,690
Deferred investment tax credit	817,539	588,588
Other	466,233	292,377
	6,437,155	5,558,655
CONTRIBUTIONS IN AID OF CONSTRUCTION	7,489,232	6,987,594
COMMITMENTS AND CONTINGENCIES — Notes I, K and L		
	$93,237,647	$86,451,088

See notes to financial statements.

*Source: 1977 Annual Report, New Haven Water Company.

Source: AWWA "Water Utility Accounting - 2nd Edition"

New Haven Water Company
*Statement of Income**

	Year ended December 31 1977	1976
OPERATING REVENUE		
Water sales:		
Residential and commercial	$14,866,648	$14,220,121
Industrial	2,196,646	2,154,504
Fire protection	2,367,339	2,261,685
Public authorities	881,084	754,190
Other	52,036	20,868
Operating Revenue	20,363,753	19,411,368
OPERATING DEDUCTIONS		
Operating expenses	6,598,648	5,772,742
Maintenance expenses	591,100	561,689
Depreciation — Note F	1,932,521	1,911,152
Taxes, other than Federal income taxes	4,586,037	4,684,575
Federal income taxes — Note G:		
Currently payable	918,270	998,500
Deferred investment tax credit	228,951	188,100
Operating Deductions	14,865,527	14,116,758
Utility Operating Income	5,498,226	5,294,610
OTHER INCOME (DEDUCTIONS)		
Allowance for funds used during construction	184,046	89,223
Other	802	(152,434)
Other Income (Deductions)	184,848	(63,211)
Income Before Interest Charges	5,683,074	5,231,399
INTEREST CHARGES		
Long-term debt	2,677,223	2,382,175
Other	56,463	253,740
Interest Charges	2,733,686	2,635,915
Income From Operations	2,949,388	2,595,484
Gain resulting from disposal of assets—Note H	61,882	43,996
Net Income	3,011,270	2,639,480
Preferred Stock dividend requirement	620,000	499,200
Net Income Available to Common Stockholders	$ 2,391,270	$ 2,140,280
Per common share (after Preferred Stock dividend requirement):		
Income from operations	$4.41	$3.97
Gain resulting from disposal of assets	.12	.08
Net Income	$4.53	$4.05

See notes to financial statements.

*Source: 1977 Annual Report, New Haven Water Company.

New Haven Water Company
*Statement of Retained Earnings**

	Year ended December 31 1977	1976
Balance at beginning of year	$ 7,518,502	$7,088,950
Net income	3,011,270	2,639,480
	10,529,772	9,728,430
Deduct:		
Cash dividends:		
Preferred Stock	597,450	499,200
Common Stock (1977—$3.36; 1976—$3.24 per share)	1,774,080	1,710,728
Preferred Stock issuance expense	84,137	
	2,455,667	2,209,928
Balance at end of year	$ 8,074,105	$7,518,502

See notes to financial statements.

*Source: 1977 Annual Report, New Haven Water Company.

Source: AWWA "Water Utility Accounting - 2nd Edition"

STATEMENT OF REVENUES,
EXPENSES AND CHANGES IN RETAINED EARNINGS

WASTEWATER TREATMENT UTILITY

Operating Revenues
- User Charges
- Septage Disposal Fees
  - Total Operating Revenues

Operating Expenses
- Personal Services
- Operations
- Maintenance
- Depreciation
- Capital Outlay
- Other
  - Total Operating Expenses

  - Operating Income

Non-Operating Revenues (Expenses)
- Operating Grants
- Interest Revenue
- Rent
- Sewer Availability Charges
- Connection Fees
- Interest Expense
  - Total Non-Operating Revenues (Expenses)

  - Net Income (Loss)

Retained Earnings July 1

Retained Earnings June 30

Source: EPA "Wastewater Utility Recordkeeping, Reporting and Management Information System"

East Bay Municipal Utility District Water System
Statement of Revenue
*For the Years Ended June 30, 1977 and 1976**

	Thousands of Dollars	
	1977	1976
OPERATING REVENUE:		
Water (Note 1)	$ 30,465	$ 31,763
Power	235	370
Taxes, including state subventions	6,157	5,965
Total operating revenue	36,857	38,098
OPERATING EXPENSES:		
Hydroelectric power generation	160	185
Source of supply	616	552
Raw water transmission and storage	2,653	1,852
Recreation areas, net	466	414
Treatment	1,998	1,598
Distribution	7,120	6,206
Customer accounting and collecting	2,190	1,908
Administrative and general	4,764	4,144
Contributions to retirement system (Note 3)	1,958	1,670
Property taxes	623	597
Depreciation of property, plant, and equipment (Note 1)	8,562	8,218
Total operating expenses	31,110	27,344
Total	5,747	10,754
ADD OTHER REVENUE:		
Interest earned on investments	1,124	1,024
Other—net	217	90
Total other revenue	1,341	1,114
DEDUCT:		
Interest expense (Note 2):		
Interest and amortization of bond expenses	5,154	4,719
Less interest charged to construction	819	934
Interest expense—net	4,335	3,785
REVENUE INVESTED IN THE WATER SYSTEM:		
For the year	2,753	8,083
At beginning of year	217,007	208,924
At end of year	$219,760	$217,007

See notes to financial statements

*Source: 1977 Annual Report, East Bay Municipal Utility District.

Source: AWWA "Water Utility Accounting - 2nd Edition"

INVENTORY STOCK RECORD

REQUISITIONED					W. O. NO.	QUANTITY				W. O. NO.	QUANTITY		
DATE	QUANT.	PLANT #	D. P. NO.	DATE	P O NO.	RCVD.	USED	BAL	DATE	P. O. NO.	RCVD	USED	BAL.
MFR. PART NO.			STOREHOUSE	CATALOG NO.		LAST COST		QUAN. OF UNITS		PARTS / UNIT		MAX.	MIN.	AN. NEED
PART NO.			DESCRIPTION					STOR. LOC		DRWR SHELF	OUT	MIN.	PO # RCVD	NORM

SPARE PARTS STOCK RECORD

DATE: 03/23/84

INVENTORY HISTORY DATA

STOCK NUMBER: 142 WAREHOUSE LOCATION: 04C

DESCRIPTION: BULB 34 FLASHLIGHT
CAT. NO.: 41332 UNIT: EACH WEIGHT (LBS.): 0.25
ITEM TYPE: FINISHED GOOD ORIGIN: PURCHASED

VENDOR NO.: 27
VENDOR STOCK NO.: FLB923A UNIT PRICE: 0.30
LEAD TIME (DAYS): 1
SALES-YTD: 6 RETURNS-YTD: 0

QUANTITY ON-HAND: 3 DATE OF LAST SALE: 01/20/84
RESERVED: 0 RECEIVED: 01/23/84
ON-ORDER: 0 ORDER: 01/20/84
RECEIVED: 6

REORDER POINT: 3 ORDER QTY.: 6 SAFETY STOCK QTY:. 1
CURRENT UTILIZATION RATE (PER WEEK): 0.58
CURRENT INVENTORY VALUE: 0.78
PROJECTED REORDER DATE: 04/06/84

DATE: 03/23/84

LEAD TIME REPORT

STOCK NUMBER	DESCRIPTION	SAFETY STOCK QTY.	VENDOR NUMBER	LEAD TIME (DAYS)	QUANTITY ON-HAND	DATE LAST ISSUED	DATE LAST ORDERED	DATE LAST RECEIVED	UNIT PRICE	$ VALUE ISSUED YTD	QTY. ISSUED YTD
142	BULB 34 FLASHLIGHT	1	27	1	3	031284	012084	012384	0.30	1.82	7

.
.
.
.

DATE: 03/23/84

STOCK STATUS REPORT

NUMBER	DESCRIPTION	PROD. CAT.	LAST ISSUED	UNITS ON-HAND	AVERAGE		REPLACEMENT		STANDARD	
					UNIT COST	VALUE	UNIT COST	VALUE	UNIT COST	VALUE
142	BULB 34 FLASHLIGHT	410	031284	3	0.26	0.78	0.30	0.90	0.0	0.000

.
.
.
.

DATE: 03/23/84

MULTIPLE WAREHOUSE REPORT

STOCK NUMBER	WAREHOUSE LOCATION	CAT. DESCRIPTION	AVG. COST	QTY. ON-HAND	QTY. ON-ORDER	QTY. RESERVED	ON-HAND VALUE
140	01A	CEMENT PVC 1	1.90	8.0	0	2.0	15.20
141	01A	CEMENT PVC 2	2.10	3.0	12.0	1.0	6.30
TOTALS FOR THIS ITEM				11.0	12.0	3.0	21.50
142	04C	BULB 34 FLASHLIGHT	0.30	3	0	0	0.90
.							.
.							.
.							.
.							.

INDIVIDUAL CUSTOMER METER READING LOG

```
WATER BILLING INQUIRY
ACCOUNT: 0343657   CUSTOMER:     NAME:  MR. JOHN DOE
     READ DATE: 280378  CONSUMPTION:    033  METER READ:   1214  READ TYPE: C
     BILL CLASS: A   SEWER PERCENT: 100                    BALANCE:       $0.00
     BILL DATE: 130478  AMOUNT BILLED:       $28.71    AMOUNT PAID:      $28.71
                        BILL DUE DATE: 280478
                 BILLING: CURRENT                                PAYMENT
            ITEM          AMOUNT                            AMOUNT  TYPE DATE BATCH
        WATER               $28.71                           $28.71  N  280478  10


WATER BILLING CONSUMPTION INQUIRY
ACCOUNT: 0343657   CUSTOMER:
    METER SIZE: 1  UNIT: G   SERIAL NO: 19733788   READ SEQ: 51310
     READ DATE  TYPE   READING  CONSUMPTION
       280378     C      1214
       100178     A      1181
       280977     C      1136
       110777     C      1096
       040477     A      1006
       030177     C       953
       041076     E       872
       120776     A       857
       120476     E       715
       120176     E       700
       141075     E       680
```

Computer-Generated Water Billing Inquiry

Source: AWWA "Computer Based Automation in Water Systems"

PAYABLE AT :

RETURN POSTAGE
GUARANTEED

ANYTOWN USA 12345

FIRST CLASS MAIL
U.S. POSTAGE PAID
POST CARD RATE
PERMIT 9

AMOUNT	CODE

PAY THIS AMOUNT → $
S-SEWER
A-ARREARS

(PERIOD OF SERVICE) (AMOUNT)

BILLS ARE NOW DUE AND PAYABLE

	MO	DAY	YEAR
DATE OF BILL SERVICE TO			
PENALTY ADDED AFTER			

SERVICE LOCATED AT:

KEEP THIS STUB - RETURN OTHER PORTION
QUARTERLY SEWER BILL

CUSTOMER NAME
AND
ADDRESS

SUMMARY EMPLOYEE PROFILE REPORT

Report # _____ For the Period of _____ - _____

Employee Name	Number	Date of Hire	Career Profile		Training		Salary History	
			Date	Classification	Hours/Date	Course	Date	Salary Code
John E. Doe	05884	12/9/73	12/9/73 12/8/74 6/30/75	Laborer I Operator I Operator II	40/3/1/75 6/12/76	Certified Level I Certified Level II	12/9/73 2/8/74 6/30/75 2/8/78	1-54-066 1-54-082 1-57-120 1-57-200

Source: EPA "Wastewater Utility Recordkeeping, Reporting and Management Information Systems" (Revised)

COMPENSATION RECORD

NAME _____ SOC. SEC. NO. _____ ADDRESS _____ PHONE _____

DEPT. OR PLACE OF WORK _____ EMP. NO. _____ INCOME TAX STATUS _____

EXEMPT F.I.C.A. ☐ INC. TAX ☐

POSITION _____

DATE	RATE	FIXED EARNINGS												FIXED DEDUCTIONS

NO. OF EXEMPTS _____
EFFECTIVE DATE _____
DATE OF EXEM. CERT. _____

NAME		PERIOD ENDING			EARNINGS											DEDUCTIONS	NET PAY	CHECK NO.	CUMU EAR
																		TOTAL	
																		YEAR TO DATE	
																		TOTAL	
																		YEAR TO DATE	

COD. FORM 3111

DATE EMPLOYED _____ DATE TERMINATED _____ REASON FOR TERMINATION _____

SPOUSE _____ PHONE _____ PERSON TO NOTIFY IN EMERGENCY _____

PAYROLL REGISTER

TIME PERIOD _____ TO _____

EMPL NO.	EMPLOYEE NAME	CLOCK ID	TERM. LEAVE REHIRE	RATE	HOURS		EARNINGS		DEDUCTION 1			DEDUCTION 2			DEDUCTION 3			DEDUCTION 4			DEDUCTION 5			DEDUCTION 6			TOTAL GROSS EARNINGS	TOTAL NET EARNINGS
					REGULAR	OVERTIME	REGULAR	OVERTIME	TYPE	CODE	AMOUNT	TYPE	CODE	AMOUNT	TYPE	CODE	AMOUNT	TYPE	CODE	AMOUNT	TYPE	CODE	AMOUNT	TYPE	CODE	AMOUNT		
				TOTALS																								

CODES TO USE

1 V	–Vacation W/Pay	8 B	–Bereavement Days
2 VOP	–Vacation No Pay	9 SUS	–Suspension
3 S	–Sick W/Pay	10 J	–Jury Duty
4 SOP	–Sick No Pay	11 T	–Triple Time - Holiday
5 H	–Regular Holiday Pay	12 C	–Childbearing Leave
6 M	–Military Leave	13 Y	–Double Time - Over 12 Hours
7. WC	–Workmen's Comp	14 P	–Personal Day

SUMMARY TIME SHEETS

PAYROLL NO. _____ PAY PERIOD

HOURLY _____

SALARY _____

*Each space must show DAILY HOURS and code if necessary.

Signature _____

Director

EMPL NO.	NAME	MON.	TUES.	WED.	THURS.	FRI.	SAT.	SUN.	1. TOTAL HOURS WORKED	2. TOTAL BI-WEEKLY REG. HRS. WORKED	3. TOTAL OVERTIME @ TIME & ½	4. TOTAL STRAIGHT TIME	5. TOTAL .50 – 1st SHIFT	6. TOTAL .35 – 3rd SHIFT	7. TOTAL EMGCY TIME	8. TOTAL DOUBLE TIME	9 TOTAL HOLIDA TIME

SAMPLE PURCHASE ORDER

To: Vendor Name
Address
Attn: _____ Phone: _____

Ship to: Utility Name
Address
Attn: _____ Phone: _____

Purchase Order # _____
Work Order # _____
Date Initiated _____
Date Required _____
Ship Via _____
F.O.B. _____
Terms _____

QUANTITY	STOCK NUMBER/DESCRIPTION	PRICE	PER	TOTAL	ACCOUNT NO.

AWARD AND CONTROL DATA

TYPE OF QUOTE: Verbal Written Sealed Bid

VERBAL QUOTES ONLY Selection 1 2 3

Vendor	No.	Unit Price	Description	Reason
1.				
2.				
3.				

WRITTEN AND SEALED BID QUOTES ONLY

Completed RFQ attached Yes No Reason: _____
Purchase posted to fixed Asset Records Yes No Reason: _____
Materials and spare parts list obtained Yes No Reason: _____

Prepared by _____ Date _____ Approved by _____ Date _____
Title _____
Approved for Payment _____ Date _____ Paid Date _____ Check # _____

IMPORTANT: Our Purchase Order Number must appear on Invoices, Packages and Correspondence

SHEET ___ OF ___

Distribution: White - Vendor Pink - Utility Blue - Accounting Yellow - MIS

Derived from: Sample Purchase Orders in EPA, "Wastewater Utility Recordkeeping, Reporting and Management Information Systems" and EPA "Maintenance Management Systems for Municipal Wastewater Facilities".

SCHEDULE OF BILLS
FOR PERIOD XX/XX/XX TO XX/XX/XX

CHECK NOS.	RECIPIENT	EXPENDITURE DESCRIPTION	MAJOR OBJECT OF EXPENDITURE CODE	AMOUNT
	General Prepaids			
XXX		Payroll	100	$XXXXXX.XX
	Other Services			
XXX	John Doe	Sick Leave Reimbursement	102	$ XX.XX
XXX	WW Newsletter	Subscription	211	$ XX.XX
.				.
.				.
.				.
.				.
TOTAL				$XXXXXX.XX

SERVICE LIFE SCHEDULE

DATE XX/XX/XX PAGE 1

UPDATE: XX/XX/XX

SEWER SERVICE LINES

LENGTH (FEET) AND YEAR OF CONSTRUCTION

SERVICE AREA	6-INCH		8-INCH		10-INCH		12-INCH		15-INCH		18-INCH		21-INCH		24-INCH		27-INCH		TOTAL
	FEET	YEAR	FEET	YEAR	FEET	YEAR	FEET	YEAR	FEET	YEAR	FEET	YEAR	FEET	YEAR	FEET	YEAR	FEET	YEAR	FEET
TOTAL LENGTH	.																		

LENGTH (FEET) OF SEWER SERVICE LINES BY YEAR TO BE DEPRECIATED

	1960	1965	1970	1973	1975	1976	1980	1981	1982	TOTAL
6-INCH	.									
8-INCH	.									
10-INCH	.									
12-INCH	.									
15-INCH										
18-INCH										
21-INCH										
24-INCH										
27-INCH										
TOTAL										

SERVICE LIFE SCHEDULE

DATE: XX/XX/XX PAGE 2

DOLLAR VALUE OF SEWER SERVICE LINES BY YEAR TO BE DEPRECIATED

	1960	1965	1970	1973	1975	1976	1980	1981	1982	TOTAL
6-INCH	.									
8-INCH	.									
10-INCH	.									
12-INCH	.									
15-INCH										
18-INCH										
21-INCH										
24-INCH										
27-INCH										
TOTAL										

SEWER CONNECTIONS AT XXX.XX EACH FOR XXXXXX CONNECTIONS.

SEWER METERS USED TO REPLACE DEFECTIVE METERS

PURCHASE DATE	PURCHASE COST	DESCRIPTION	LOCATION
.			
.			
.			
.			
.			
TOTAL			

ANNUAL DEPRECIATION SCHEDULE

DATE XX/XX/XX PAGE 1

UPDATED XX/XX/XX FILE:5913AF

INVENTORY

EQUIPMENT ID. NO.	DATE PURCHASE	PURCHASE COST	SERVICE LIFE	SALVAGE VALUE	ANNUAL DEPR.	WEIGHT	MANUFACTURER	MODEL NUMBER	COLOR	DEPT. CODE	WATER/SEWER %	FUND %
.												
.												
.												
.												
.												

ANNUAL DEPRECIATION SCHEDULE
AND ANNUAL RESERVE REQUIREMENT

DATE XX/XX/XX PAGE 2

UPDATE: XX/XX/XX

INVENTORY

EQUIPMENT ID. NO.	PURCHASE DATE	PURCHASE COST	SERVICE LIFE	SALVAGE VALUE	ANNUAL DEPR.	ACCUM. DEPR.	DESCRIPTION	MANUFACTURER	MODEL NUMBER	LOCATION CODE
.										
.										
.										
TOTAL										

COST SUMMARY FOR DEPRECIATION (AS OF XX/XX/XX)

TOTAL PURCHASE COST: _____
TOTAL SALVAGE VALUE: _____
TOTAL ACCUM DEPR. AS OF (MONTH) (YEAR): _____

SCHEDULE OF DEPRECIATION EXPENSES:

FISCAL YEAR	AMOUNT
.	.
.	.
.	.
.	.
.	.

SAMPLE REVENUE REQUIREMENT REPORT

REVENUE ITEM		AMOUNT
Cost of Service:		
o Operation expenses*		
o Maintenance expenses*		
o Debt service requirement		
o Taxes and payments in lieu of taxes		
o Replacement		
	TOTAL	$
Revenue Not Related to Use:		
o General property taxes		
o Special assessments		
o Federal revenue sharing		
o Interest revenue		
o Septage disposal fees		
o Land application fees		
o Sewer availability charges		
o Connection fees		
o Development fees		
TOTAL	$	$
Revenues to be Recovered Through Sewer Use Charges		$

* Can be further broken down for more detail.

SCHEDULE C

SEWER SERVICE RATE SCHEDULE

Water Consumption (gallons per quarter)		Quarterly Sewer Service Rate Per 1,000 Gallons		
		User Charge	Other Charge	Total
First	10,000	$1.00	$0.60	$1.60
Next	20,000	$1.00	$0.45	$1.45
Next	270,000	$1.00	$0.30	$1.30
Over	300,000	$1.00	$0.10	$1.10
Minimum Quarterly Charge based on 5,000 gallons/ quarter/customer		$5.00	$3.00	$8.00

SURCHARGES

Establishments discharging sewage and industrial wastes to the sewer system having an average five-day biochemical oxygen demand (BOD) greater than 200 parts per million (ppm), a suspended solids content greater than 250 ppm, a total phosphorus (as P) content greater than 10 ppm or a total ammonia nitrogen (as N) content greater than 20 ppm shall pay a strength of waste surcharge, in addition to applicable volume charges, equal to 1/10 of one percent for each part per million by which the BOD exceeds 200 ppm plus 1/10 of one percent for each part per million by which the suspended solids exceeds 250 ppm, plus one and 2/10 of one percent for each part per million by which the phosphorus exceeds 10 ppm plus 6/10 of one percent for each part per million by which the ammonia-nitrogen exceeds 20 ppm.

WASTEWATER TREATMENT FACILITY

STATEMENT OF ACTUAL AND ESTIMATED REVENUES

	Current Month			Year to Date				
Revenue Sources	Estimated	Actual	Over (Under)	Total Estimated	Estimated	Actual	Over (Under)	Balance to Be Collected
Sewer Service Charges								
General Property Taxes								
Federal Grants								
State Grants								
Septic Tank Disposal Fees								
Interest Revenue								
Rents								
Sewer Availability Charges								
Connection Fees								
Development Fees								
Other								
Total Revenue								

Source: EPA "Comprehensive Diagnostic Evaluation and Selected Management Issues"

HISTORY OF REPAIRS

DATE	W. O NO.	DESCRIPTION OF REPAIRS	MAN-HOURS	MATERIALS USED

EQUIPMENT NO.	DESCRIPTION

HISTORY OF REPAIRS CARD

Work Load/Accomplished Summaries

Fairfax County Lower Potomac Pollution Control Plant

MAINTENANCE SUMMARY REPORT FOR WEEK ENDING_____

WORK LOAD SUMMARY

Line	Item	Number of Actions	Estimated Manhours			
			Skill 1	Skill 2	Skill 3	Total
	Preventive Maintenance					
A	Backlog from previous week					
B	Regularly scheduled for this week					
C	Total outstanding work (A&B)					
D	Accomplished this week					
E	Backlog for next week (C-D)					
	Corrective Maintenance					
F	Backlog from previous week					
G	New work orders, this week					
H	Total outstanding work (F&G)					
I	Accomplished this week					
J	Backlog for next week (H-I)					
K	Total backlog for next week (E&J)					

WORK ACCOMPLISHED SUMMARY

Item	Preventive Maintenance	Corrective Maintenance	Total Maintenance
Number of Actions Completed			
Actual manhours expended			
Skill 1			
Skill 2			
Skill 3			
Total			
Labor costs			
Regular			
O. T.			
Total			
Outside contractor costs			
Cost of parts and materials			
Total costs			

Form M7-5/72

Source: EPA "A Planned Maintenance Management System for Municipal Wastewater Treatment Plants"

Statement of Actual and Budgeted Expenditures and Encumbrances, By Department/Activity

For the Month of September, 19xx and Nine Months Ended September 30, 19xx

Department/ Object	19xx Appropriation (Revised) (1)	Month of September, 19xx: Budgeted (2)	Actual (3)	Actual Under (Over) Budgeted (4)	Budgeted (5)	Actual (6)	Jan. - Sept. 19xx: Actual Under (Over) Budgeted (7)	Unexpected Balance (8)	Encumbrances (9)	Unencumbered Balance (10)
Department Name:										
Personal Services	$	$	$	$	$	$	$	$	$	$
Supplies										
Other Services and Charges										
Capital Outlays										
TOTAL	$	$	$	$	$	$	$	$	$	$

Source: EPA "Wastewater Utility Recordkeeping, Reporting and Management Information Systems"

Summary Statement of Actual and Budgeted Expenditures and Encumbrances

For the Month of September, 19xx and Nine Months Ended September 30, 19xx

Department/ Function/ Activity	19xx Appropri-ation (Revised) (1)	Month of September, 19xx: Budgeted (2)	Actual (3)	Actual Under (Over) Budgeted (4)	Jan. - Sept. 19xx: Budgeted (5)	Actual (6)	Actual Under (Over) Budgeted (7)	Un-expected Balance (8)	Encum-brances (9)	Unemcum-bered Balance (10)
	$	$	$	$	$	$	$	$	$	$
o Collection										
o Pumping										
o Treatment										
Preliminary										
Primary										
Secondary										
Advanced										
Sludge										
o General Admin-istration										
o Laboratory										
TOTAL	$	$	$	$	$	$	$	$	$	$

Source: EPA "Wastewater Utility Recordkeeping, Reporting and Management Information Systems"

TYPICAL WASTEWATER UTILITY
LINE ITEM BUDGET
DEPARTMENT

Line Item	1st Quarter	2nd Quarter	3rd Quarter	4th Quarter
Operation, Maintenance & Replacement				
o Personal Services				
- Salaries				
- Overtime				
- Retirement Contributions				
- Health Insurance				
- Workmen's Compensation				
- Unemployment Insurance				
- F.I.C.A. Contributions				
- Miscellaneous Fringe Benefits (vacations, etc.)				
Total Personal Services				
o Expenses				
- Insurance				
- Vehicle Repairs, Fuel, etc.				
- Supplies (tools, machinery, parts, lab equipment, samplers, meters, and accessories)				
- Power (electricity and fuel requirements for treatment works processing and pumping)				
- Building Utilities (electric, heating, telephone, water, refuse disposal)				
- Building and Ground Maintenance				
- Chemicals				
- Transportation Equipment (fuel, lubricants, tools, parts and accessories, maintenance, new vehicles)				
- Equipment Replacement				
- Employee Training, Travel, and Professional Organization Dues and Publications				
- Sewer Maintenance (tools, parts, equipment)				
- Office Equipment Supplies				
- Insurance				
- Contractural Services and Rentals (legal, audit, annual UCS review, engineering, other)				
- Replacement (plant, service lines, and pumping apparatus)				
- Miscellaneous (publication fees, franchise requirements, security, etc.)				
- Contingencies (unexpected expenses)				
Total Expenses				
Capital Outlay				
o Capital Improvements				
o Debt Service				
o Principal and Interest on Existing Debt				
Total Utility				

Source: Based on EPA "Comprehensive Diagnostic Evaluation and Selected Management Issues"

City Water Board of San Antonio
*Debt Service Requirements and Coverage**

SUMMARY OF DEBT CHARGES UNTIL MATURITY

Calendar Years	Annual Requirements to Retire: Total	Interest	Principal	Principal Balance Outstanding
Balance 12-31-77				$52,950,000
1978	$ 4,307,905	$ 2,502,905	$ 1,805,000	51,145,000
1979	4,293,403	2,423,403	1,870,000	49,275,000
1980	4,276,075	2,341,075	1,935,000	47,340,000
1981	4,276,302	2,256,302	2,020,000	45,320,000
1982	4,332,805	2,167,805	2,165,000	43,155,000
1983	4,329,027	2,074,027	2,255,000	40,900,000
1984	4,320,168	1,975,168	2,345,000	38,555,000
1985	4,298,724	1,868,724	2,430,000	36,125,000
1986	4,333,288	1,753,288	2,580,000	33,545,000
1987	4,321,369	1,631,369	2,690,000	30,855,000
1988	4,318,544	1,503,544	2,815,000	28,040,000
1989	4,334,425	1,369,425	2,965,000	25,075,000
1990	4,302,575	1,227,575	3,075,000	22,000,000
1991	4,296,588	1,071,588	3,225,000	18,775,000
1992	4,277,100	902,100	3,375,000	15,400,000
1993	4,273,775	723,775	3,550,000	11,850,000
1994	4,333,900	533,900	3,800,000	8,050,000
1995	1,554,657	404,657	1,150,000	6,900,000
1996	1,517,031	342,031	1,175,000	5,725,000
1997	1,478,063	278,063	1,200,000	4,525,000
1998	1,437,749	212,749	1,225,000	3,300,000
1999	1,468,600	143,600	1,325,000	1,975,000
2000	1,444,925	69,925	1,375,000	600,000
2001	616,200	16,200	600,000	—
	$82,743,198	$29,793,198	$52,950,000	
Average annual requirements:				
1977	$ 3,061,993			
1978	$ 3,447,633			

REVENUE BOND COVERAGE AS DEFINED BY REVENUE BOND ORDINANCE

Calendar Year	Revenues	Operating Expenses Before Depreciation Expense	Revenue Available for Debt Service and Other Requirements	Average Annual Debt Service Requirements	Times Debt Service
1967	$ 9,492,767	$ 2,987,686	$ 6,505,081	$ 1,599,318	4.07
1968	9,119,056	3,409,385	5,709,671	1,593,885	3.58
1969	9,479,574	3,863,165	5,616,409	1,587,721	3.54
1970	9,970,966	4,343,638	5,627,328	1,577,298	3.57
1971	11,924,401	5,028,557	6,895,844	2,417,539	2.85
1972	11,071,491	5,348,196	5,723,295	2,432,264	2.35
1973	12,868,775	5,578,621	7,290,154	3,199,125	2.28
1974	14,009,345	7,136,442	6,872,903	3,221,214	2.13
1975	14,423,374	8,197,928	6,225,446	3,226,449	1.93
1976	17,535,093	9,066,997	8,468,096	3,223,709	2.63
1977	20,221,593	10,795,965	9,425,628	3,061,993	3.08

*Source: 1977 Annual Report, City Water Board of San Antonio.

Source: AWWA "Water Utility Accounting, 2nd Edition"

City Water Board of San Antonio
Outstanding Indebtedness*

The City has outstanding Water Revenue Bonds in seven parity series as follows:

Issue	Final Maturity	Original Average Life	Effective Interest Rate On Sale Date	20-Bond Yield Index Nearest Sale Date*	Amount Outstanding
Series 1957-A	1984	18.5 years	3.78%	3.38%	$ 6,370,000
Series 1959	1983	18.8 years	3.47%	3.39%	1,850,000
Series 1961	1989	18.2 years	3.52%	3.53%	1,300,000
Series 1962	1989	17.1 years	3.20%	3.21%	1,265,000
Series 1966	1990	18.8 years	4.12%	4.03%	5,500,000
Series 1971	1990	15.0 years	4.65%	5.05%	9,700,000
Series 1973	1994	17.4 years	5.10%	5.27%	13,600,000
Series 1976	2000	16.8 years	5.65%	6.52%	8,000,000
Series 1977	2001	16.8 years			7,000,000
Total Water Revenue Bonds to Be Outstanding, Including the Series 1977 Bonds					$54,585,000

* As published by "The Bond Buyer".

*Source: Official Notice of Sale and Official Statement, $7,000,000 City of San Antonio, Texas, Water Revenue Bonds, Series 1977, dated April 21, 1977.

Source: AWWA "Water Utility Accounting, 2nd Edition"

WASTEWATER TREATMENT UTILITY

ACTIVITY BUDGET

LINE ITEM	ACTIVITY					
	COLLECTION	PUMPING	TREATMENT	LABORATORY	ADMINIS-TRATION	TOTAL
Personal Services						
Salaries						
Overtime						
Fringe Benefits						
Total Personal Services						
Expenses						
Insurance						
Vehicle Repairs, Fuel, etc.						
Supplies						
Electricity						
Gas, Oil and Diesel						
Maintenance						
Chemicals						
Equipment Rental						
Training						
Travel						
Parts						
Equipment Replacements (capital outlays)						
Contingencies						
Total Expenses						
Capital Outlay						
Improvements						
Expansions						
Principal and Interest on Existing Debt						
Betterments						

Source: EPA "Comprehensive Diagnostic Evaluation and Selected Management Issues" (revised)

The Willing Water Utility

Structure of an Annual Operating Budget

Statement of Estimated Revenue and Expense
(see Figure 9.3)

	Budget 19BY
Operating Revenues	$6,930,000
Operating Expenses:	
Operation Expense	$1,663,200
Maintenance Expense	346,500
Depreciation and Amortization Expense	485,100
Taxes	2,564,100
Total Operating Expenses	$5,058,900
Utility Operating Income	$1,871,100

Budgeted Utility Operation and Maintenance Expenses

Cost Center	Budgeted Amount-19BY
Office of the General Manager	$ 36,400
Production Division	748,370
Transmission and Distribution Division	324,850
Commercial Division	268,960
General and Administrative Division	631,120
Total Budgeted Operation and Maintenance Expenses	$2,009,700

(Budget or Responsibility Level 1)

Transmission and Distribution Division
Budgeted Operating Expenses

Cost Center	Budgeted Amount-19BY
Office of the Division Manager	$ 23,200
Operations Section	116,485
Maintenance Section	185,165
Total	$324,850

(Budget or Responsibility Level 2)

Maintenance Section
Budgeted Operating Expenses

Cost Center	Budgeted Amount-19BY
Maintenance Supervision	$ 12,480
Maintenance of Mains and Storage Facilities	61,120
Maintenance of Customer Services	70,365
Maintenance of Meters	41,200
Total	$185,165

(Budget or Responsibility Level 3)

Meter Maintenance Shop

Budgeted Operating Expenses	Budgeted Amount-19BY
Salaries and Wages:	
Foreman	$ 5,150
Meter Repairmen	13,435
Laborers	10,105
Total Salaries and Wages	$28,690
Materials and Supplies:	
Small Tools	$ 200
Maintenance Materials and Supplies	10,900
Other	710
Total Materials and Supplies	$11,810
Other Expenses:	
Maintenance of Meter Testing Equipment	$ 210
Utility Services	360
Incidental Expenses	130
Total Other Expenses	700
Total Budgeted Operating Expenses	$41,200

(Budget or Responsibility Level 4)

Source: AWWA "Water Utility Accounting - 2nd Edition"

The City Water Department
Cash Flow Forecast
For the Year 19BY

	1st Quarter—19BY					
	January	February	March	2nd Quarter —19BY	3rd Quarter —19BY	4th Quarter —19BY
Estimated Cash Balance, Beginning of Period	$250,000	$174,000	$ 69,000	$ 142,000	$ 96,000	$ 75,000
Estimated Cash Provided By:						
Sale of Water Service	$500,000	$500,000	$ 570,000	$1,630,000	$1,720,000	$1,790,000
Rent of Property	3,000	3,000	3,000	9,000	9,000	9,000
Interest on Investments	1,000	2,000	3,000	12,000	15,000	10,000
Sale of Plant Assets and Other Property	12,000	5,000	8,000	25,000	30,000	10,000
Advances and Contributions in Aid of Construction (net of repayment of Customer Advances)	10,000	12,000	14,000	50,000	60,000	60,000
Customer Meter Deposits (Net of repayments)	1,000	1,000	1,000	3,000	3,000	3,000
Use of Restricted Assets—Revenue Bond Proceeds				380,000	420,000	200,000
Short-Term Borrowings				300,000		
Issuance of Bonds			1,972,000			
Other	5,000	5,000	5,000	15,000	15,000	15,000
Estimated Total Cash Provided During Period	$532,000	$528,000	$2,586,000	$2,424,000	$2,272,000	$2,097,000
Estimated Total Cash Available During Period	$782,000	$702,000	$2,655,000	$2,566,000	$2,368,000	$2,172,000
Estimated Cash Disbursements:						
Salaries and Wages	$ 80,000	$ 80,000	$ 75,000	$ 250,000	$ 255,000	$ 235,000
Materials and Supplies	160,000	165,000	130,000	670,000	540,000	450,000
Payments to Outside Contractors for Construction	200,000	250,000	150,000	930,000	870,000	530,000
Purchase of Plant Assets and Other Property	75,000	60,000	65,000	225,000	210,000	100,000
Interest (Payments From Other Than Restricted Assets)	15,000	10,000	25,000	50,000	75,000	60,000
Taxes	8,000	10,000	20,000	75,000	32,000	98,000
Repayment of Short-Term Borrowings	15,000	5,000	10,000	20,000	60,000	310,000
Transfers to Restricted Assets-Bond Debt Service	40,000	40,000	35,000	200,000	195,000	190,000
Transfers to Restricted Assets-Customer Meter Deposits	1,000	1,000	1,000	3,000	3,000	3,000
Transfers to Restricted Assets-Proceeds from Sale of Bonds			1,972,000			
Other	14,000	12,000	10,000	47,000	53,000	32,000
Estimated Total Cash Disbursements During Period	$608,000	$633,000	$2,513,000	$2,470,000	$2,293,000	$2,008,000
Estimated Cash Balance End of Period	$174,000	$ 69,000	$ 142,000	$ 96,000	$ 75,000	$ 164,000

Source: AWWA "Water Utility Accounting - 2nd Edition"

Cash Flow Results and Forecast

Results for_____and Forecast through_____

Fund	Results for (Current Month)				Projected for (Each Projected Month)				(Additional Projected Months)		
	Beginning Balance	Receipts	Disburse-ments	Ending Balance	Beginning Balance	Receipts	Disburse-ments	Ending Balance	"	"	"
	$	$	$	$	$	$	$	$	$	$	$
TOTAL-ALL FUNDS	$_____	$_____	$_____	$_____	$_____	$_____	$_____	$_____	$___	$___	$___

Source: EPA "Wastewater Utility Recordkeeping, Reporting and Management Information Systems"

Wastewater Facilities Financial Information Sheet

What Roles And Responsibilities Will Local Governments Have?

Cooperative arrangements between various entities may be required to meet the management needs of wastewater treatment facilities.

				from line
• What agency will:	☐ Own the facilities	☐ Operate	☐ Finance	(101)
	_____	_____	_____	
• Will there be financial contributions by:	☐ Other agencies	☐ Industry		(103)
• Have participating agencies been asked to review:	☐ Wastewater facilities plan	☐ Population projections	☐ Service area boundaries	(105)
• Have agreements been sought between the operating agency and:	☐ Participating agencies	☐ Other agencies	☐ Industy	(107)

How Much Will The Facilities Cost At Today's Prices?

The following figures are estimated costs for construction, operation, and maintenance of the proposed facilities. Dollar amounts are uninflated and reflect today's prices.

A. Construction costs estimate

		from line
• Wastewater treatment plant	_____	(201)
• Pump stations	_____	(202)
• Interceptor sewers	_____	(203)
• Collection sewers	_____	(204)
• On-site systems	_____	(205)
• Land acquisition	_____	(206)
• Other	_____	(207)
• Total construction costs	_____	(208)

B. Estimated annual operation, maintenance, and replacement (O+M+R) costs for the proposed facilities

			from line
• Labor	_____	per year	(209)
• Utilities	_____	per year	(210)
• Materials	_____	per year	(211)
• Outside services	_____	per year	(212)
• Misc. expenses	_____	per year	(213)
• Equipment replacement	_____	per year	(214)
• Total operation, maintenance and replacement costs	_____	per year	(215)

How Will The Facilities Be Financed?

A. Amount to be borrowed

		from line
• Grantee share of construction costs	_____	(309)
• Construction-related costs	_____	(315)
• Grantee contributions	_____	(320)
• Amount to be borrowed	_____	(321)

B. Methods of financing the amount to be borrowed

Financing method	Amount borrowed	Interest rate	Term of maturity	Annual debt service payment	from line
Genera. obligation bond					(322)
Revenue bond					(323)
Loan					(324)
Total					(325)

C. Total estimated annual wastewater facilities costs

		from line
• Net existing O+M+R	_____	(328)
• Existing annual debt service	_____	(329)
• O+M+R for proposed facilities	_____	(330)
• Debt service for proposed facilities	_____	(331)
• Total estimated annual wastewater facilities costs	_____	(332)

D. Sources of funding for total annual wastewater facilities costs

		from line
• Sewer service charges	_____	(333)
• Surcharge	_____	(334)
• Special assessments and fees		
— connection fee	_____	(335)
— betterment assessments	_____	(336)
— other	_____	(337)
• Transfers from other funds	_____	(338)
• Other	_____	(339)
• Total funding	_____	(340)

Source: GFRC, PMM & Co. "Financial Capability Guidebook"

(Continued)

Wastewater Facilities Financial Information Sheet

What Are The Annual Costs Per Household?

- Total estimated annual wastewater facilities charges _____ from line (400)
- Nonresidential share of total annual charges _____ (401)
- Residential share of total annual charges _____ (402)
- Number of households _____ (403)
- Annual costs per household for
  - — wastewater collection and treatment _____ (404)
  - — other _____ (405)
- Total annual costs per household _____ from li (40
- Median household income _____ (40
- Total annual costs per household as a % of median household income _____ (40

Can Your Community Afford The Proposed Wastewater Treatment Facilities?

The financial capability of a community is the measure of its existing financial commitments and legal financial capacity to provide services Listed below is a series of questions that will provide information about your community's financial condition and its ability to pay for the proposed facilities. The answers will give you a "snapshot" of the financial resources at your disposal to construct, operate, maintain the proposed facility.

- Over the past five years, has your community's population been stable, growing or falling?
- What is the current outstanding indebtedness of your community?
- How much additional debt can your community legally incur?
- What are your community's property tax revenues relative to the full market value of real property in your community?
- If your community proceeds with this project, can it still afford other proposed projects?
- What is your community's bond rating? Has it changed within the last two years?

The Financial Capability Guidebook has an added supplemental section to assist you in finding and interpreting the answers to these and other questions. Collectively, the information will provide assistance – but not the answer –to whether your community has the financial capability to undertake the proposed project.

Supplemental Information Sheet

This Supplemental Information Sheet may be used by your community as the basis for an in-depth evaluation of financial condition. It outlines a method for assessing a community's relative financial strengths and weaknesses. Instructions for completing this Supplemental Information Sheet can be found in the Financial Capability Guidebook, which is available from the Government Finance Research Center, 1750 K St., N.W., Suite 650, Washington, D.C. 20006 202/466-2494.

What Is The Community's Debt History?

A. Bond Ratings

			from line
• Community's most recent general obligation bond rating	Rating _____	Date of rating _____	(500)
• Community's most recent revenue bond rating	Rating _____	Date of rating _____	(501)

B. Outstanding Debt

Type of debt	Amount outstanding before project	New debt for proposed project	Total debt outstanding	
• General obligation bonds				(502)
• Revenue bonds				(503)
• Gross direct debt				(504)
• Other debt				(505)
• Direct net debt				(506)
• Overlapping debt				(507)
• Overall net debt				(508)

C. Debt Repayment Schedule

• Total Overall Net Debt Due (including new issue) within next 5 years _____ (514)

D. Debt Limits

• Briefly describe any limits on debt that apply to your community. _____ (515)

• What % of your debt limit is currently used? _____% (516)

What Is The Community's Financial Condition?

Indicator	Indicator value	Indicator rating: Weak	Average	Strong	from line
1. Annual rate of change in population	____%	Below −1% ____	−1% to 1% ____	Above 1% ____	(602)
2. Current surplus as a % of total current expenditures	____%	Below 0% ____	0% to 5% ____	Above 5% ____	(610)
3. Real property tax collection rate	____%	Below 96% ____	96% to 98% ____	Above 98% ____	(611)
4. Property tax revenues as a % of full market value of real property	____%	Above 4% ____	2% to 4% ____	Below 2% ____	(615)
5. Overall net debt as a % of full market value of real property	____%	Above 5% ____	3% to 5% ____	Below 3% ____	(616)
6. Overall net debt outstanding as a % of personal income	____%	Above 12% ____	4% to 12% ____	Below 4% ____	(619)
7. Direct net debt per capita	$____	Above $750 ____	$250 to $750 ____	Below $250 ____	(620)
8. Overall net debt per capita	$____	Above $1,000 ____	$450 to $1,000 ____	Below $450 ____	(621)
9. % direct net debt outstanding due within next 5 years	____%	Below 10% ____	10% to 30% ____	Above 30% ____	(622)
10. Operating ratio	____%	Below 100% ____	100% to 120% ____	Above 120% ____	(630)
11. Coverage ratio	____%	Below 120% ____	120% to 170% ____	Above 170% ____	(631)

Source: GFRC, PMM & Co. "Financial Capability Guidebook"

ENERGY COST AND CONSUMPTION REPORT

FACILITY OR OPERATING UNIT:	MONTH:

		ELECTRIC	GAS	OIL	OTHER	TOTAL
USAGE	USAGE (YEAR TO DATE)					
	BASE YEAR TO DATE					
	PERCENT ABOVE (BELOW) BASE YEAR					
PRICE	PRICE PER ENERGY UNIT (CURRENT MONTH)					
	BASE YEAR COST PER ENERGY UNIT					
	PERCENT ABOVE (BELOW) BASE YEAR					
COST	COST (YTD) DOLLARS					
	BASE YEAR COST (YTD)					
	PERCENT ABOVE (BELOW) BASE YEAR					
PERFORMANCE	USAGE PER 1000 GALLONS OR POUND OF BOD REMOVED, ETC.					
	BASE YEAR USAGE PER 1000 GALLONS					
	PERCENT ABOVE (BELOW) BASE YEAR					
	COST PER 1000 GALLONS OR POUND OF BOD REMOVED, ETC.					
	BASE YEAR COST PER 1000 GALLONS					
	PERCENT ABOVE (BELOW) BASE YEAR					

Source: EPA "Wastewater Utility Recordkeeping, Reporting and Management Information Systems"

U.S. [illegible] Agency

1970