United States
Environmental Protection
Agency

Office of Air Quality
Planning and Standards
Research Triangle Park, NC 27711

EPA-453/P-00-001
April 25, 2000
http://www.epa.gov/ttn/uatw

National Emission Standards for Hazardous Air Pollutants: Metal Coil Surface Coating Industry Background Information for Proposed Standards

Table of Contents

Section		Page
1.0	Summary	1-1
1.1	Compliance Options	1-1
1.2	Environmental Impact	1-2
1.3	Economic Impact	1-2
1.4	Energy Impact	1-3
2.0	Introduction	2-1
2.1	Overview	2-1
2.2	Project History	2-1
	2.2.1 Regulatory Background	2-1
	2.2.2 Data Gathering	2-4
2.3	References	2-5
3.0	Metal Coil Coating Industry Profile and Process Description	3-1
3.1	General Process Description	3-1
3.2	Industry Profile	3-2
3.3	Coatings	3-5
3.4	Process Descriptions, Current Industry Practices, and Emission Sources	3-6
	3.4.1 Storage and Handling of Coatings and Other Materials	3-7
	3.4.2 Wet Section Pretreatment	3-7
	3.4.3 Coating Application Stations	3-8
	3.4.4 Curing Ovens	3-9
	3.4.5 Quench Area	3-9
	3.4.6 Wastewater Handling and Treatment	3-10
	3.4.7 Baseline Emissions	3-10
3.5	References	3-10
4.0	Emission Control Techniques	4-1
4.1	Introduction	4-1
4.2	Capture Systems	4-1
4.3	Control Devices	4-2
	4.3.1 Thermal Incineration	4-3
	4.3.2 Catalytic Incineration	4-4
4.4	Performance of Controls	4-6
4.5	Pollution Prevention Measures	4-6
4.6	References	4-8

U.S. Environmental Protection Agency
Region 5, Library (PL-12J)
77 West Jackson Boulevard, 12th Floor
Chicago, IL 60604-3590

Table of Contents (continued)

5.0 Model Plants and Compliance Options 5-1
5.1 Introduction 5-1
5.2 Model Plants 5-1
5.3 Compliance Options 5-8
5.3.1 Criterion for Evaluating HAP Emissions Reductions from Metal Coil Surface Coating Operations 5-8
5.3.2 Consideration of Data Quality in Evaluating HAP Emission Reductions From Metal Coil Surface Coating HAP Sources 5-9
5.3.2.1 Representativeness of the Control Device Performance Data In the Metal Coil Surface Coating MACT Database 5-9
5.3.2.2 Quality of Metal Coil Surface Coating Capture Efficiency Data 5-11
5.3.3 MACT Floor Determination 5-12
5.3.3.1 Floor for Overall Control Efficiency 5-12
5.3.3.2 Floor for Emission Rate 5-18
5.4 References 5-23

6.0 Environmental and Energy Impacts 6-1
6.1 Introduction 6-1
6.2 Energy Impact 6-1
6.3 Air Pollution Impact 6-3
6.4 Water Impacts 6-4
6.5 Solid Waste Impacts 6-5
6.6 References 6-5

7.0 Costs 7-1
7.1 Introduction 7-1
7.2 Model Plant Compliance Costs 7-1
7.2.1 Permanent Total Enclosure Costs 7-3
7.2.2 Oxidizer Costs 7-5
7.2.3 Condenser Costs 7-9
7.3 Nationwide Compliance Costs 7-10
7.4 References 7-13

8.0 Economic Impact Analysis 8-1
8.1 Introduction 8-1
8.2 Industry Profile 8-1
8.2.1 Coatings 8-1
8.2.2 Costs of Production 8-1
8.2.3 Uses, Consumers, and Substitutes 8-2

8.2.4 Affected Producers 8-3
8.2.4.1 Manufacturing Facilities 8-4
8.2.4.2 Companies 8-5
8.2.4.3 Industry Trends 8-6
8.2.5 Market Data 8-7
8.2.5.1 Market Trends 8-8
8.3 Economic Impacts 8-8
8.3.1 Facility Impacts 8-9
8.3.2 Coating Line Impacts 8-11
8.3.3 Market Impacts 8-13
8.4 Small Business Impacts 8-14
8.5 References 8-18

Appendix A Participants in the Data Collection Report A-1

Appendix B Coil Coating Plant List B-1

Appendix C Summary Data for Companies Owning Metal Coil Coating Facilities C-1

Table of Contents (continued)

Figures

Figure 3-1 Typical Tandem Coil Coating Line 3-3
Figure 8-1 Distribution of Coated Metal Coil Shipments by Market: 1997 8-3

Tables

Table 3-1. Typical Coatings Used in Metal Coil Surface Coating 3-6
Table 5-1. Model Plant Parameters for Model Plant No. 1 5-3
Table 5-2 . Model Plant Parameters for Model Plant No. 2 5-4
Table 5-3. Model Plant Parameters for Model Plant No. 3 5-5
Table 5-4. Model Plant Parameters for Model Plant No. 4 5-6
Table 5-5. Model Plant Parameters for Model Plant No. 5 5-7
Table 5-6. Metal Coil Surface Coating Average Facility OCE 5-13
Table 5-7. MACT Floor Facility Products 5-17
Table 5-8. Metal Coil Surface Coating Facility Average 5-20
Table 6-1. Summary of Metal Coils Surface Coating Model and Nationwide Energy Impacts 6-2
Table 7-1. Model Plant Specifications Used for Compliance Costing 7-2
Table 7-2. Summary of Coating Room Costs 7-4
Table 7-3. Summary of Oxidizer Upgrade Costs for Coil Coating Solvent-Borne Model Plants 7-6
Table 7-4. Summary of Oxidizer Replacement Costs for Coil Coating Solvent-Borne Model Plants 7-7
Table 7-5. Condenser Costs for Coil Coating Waterborne Model Plant 7-9
Table 7-6. Summary of Metal Coil Surface Coating Model and Nationwide Compliance Costs 7-12
Table 8-1. Spot Prices for Steel and Aluminum Sheet: 1999-1998 8-2
Table 8-2. Volume and Value of Coatings Applied to Coat Metal Coils: 1996-1997 8-2
Table 8-3. Summary of Coil Coating Facilities by Producer Type: 1997 8-5
Table 8-4. Location of Potentially Affected Facilities by State: 1997 8-5
Table 8-5. Summary of Coil Coating Facilities by Ownership Size: 1997 8-7
Table 8-6. Shipments of Coated Metal Coils by Metal Type (10^6 tons) 8-8
Table 8-7. Summary of Compliance Cost Burden on Coil Coating Facilities by Producer Type: 1997 8-10
Table 8-8. Summary of Compliance Cost Burden on Coil Coating Facilities by Ownership Size: 1997 8-11

Table of Contents (continued)

Table 8-9. Summary of Compliance Cost Burden on Coil Coating Lines by Producer Type: 1997 8-12

Table 8-10. Summary of Compliance Cost Burden on Coil Coating Lines by Ownership Size: 1997 8-13

Table 8-11. Compliance Cost Share of the Value of Coated Metal Coil and Inputs: 1997 8-14

Table 8-12. Summary Statistics for SBREFA Screening Analysis: MACT Floor Alternative 8-17

1.0 SUMMARY

Under Section 112(d) of the Clean Air Act (the Act), the U.S. Environmental Protection Agency (EPA) is developing national emission standards for hazardous air pollutants (NESHAP) for the metal coil surface coating source category. The EPA is required to publish final emission standards for the metal coil surface coating source category by November 15, 2000.

The Act requires that the emission standards for new sources be no less stringent than the emission control achieved in practice by the best controlled similar source. For existing sources, the emission control can be less stringent than the emission control for new sources, but it must be no less stringent than the average emission limitation achieved by the best performing 12 percent of existing sources (for which the EPA has emissions information). In categories or subcategories with fewer than 30 sources, emission control for existing sources must be no less stringent than the average emission limitation achieved by the best performing 5 sources. The NESHAP are commonly known as maximum achievable control technology (MACT) standards.

1.1 COMPLIANCE OPTIONS

A 98 percent facility-wide coating line overall control efficiency (OCE) is determined to be the MACT floor for new and existing sources in the metal coil surface coating industry. This OCE represents the use of permanent total enclosures to achieve 100 percent capture of application station HAP emissions and a thermal oxidizer to achieve a destruction efficiency of 98 percent. No technology was identified that could achieve a better OCE than the use of permanent total enclosures to capture emissions from coating application stations and a thermal oxidizer to destroy HAP emissions from application and the curing oven.

An alternative facility HAP emission rate limit of 0.24 pounds of HAP per gallon of solids applied is also being considered. The facility HAP emission rate limit is intended to provide a compliance option for facilities that choose to limit their coating line HAP emissions either through a combination of low-HAP coatings and add-on controls or through the use of waterborne, high solids, or other coatings that are pollution preventing.

1.2 ENVIRONMENTAL IMPACT

Total nationwide HAP emissions from metal coil surface coating operations are estimated to be reduced by approximately 1366 tons per year from 1997 levels; a reduction of almost 55 percent. The reduction in VOC emissions cannot be quantified with available data, but the percent reduction should be similar to the percent reduction in HAP emissions. Electric utility generation will result in small increases in sulfur dioxide and carbon dioxide emissions from fossil-fuel powered generation plants. Water and solid waste impacts are negligible.

1.3 ECONOMIC IMPACT

Nationwide total capital investment costs for this regulation are estimated to be $11.6 million (1997 $) and nationwide total annual compliance costs are estimated to be $5.9 million. The economic analysis indicates that the cost of coating operations will not increase sufficiently to cause producers to cease or alter their current coating operations. In addition, the Agency has determined that this regulation does not impose a significant impact on a substantial number of small businesses.

1.4 ENERGY IMPACT

Energy requirements for implementation of the compliance options for metal coil surface coating facilities include electricity to collect and treat ventilation air, electricity for lighting permanent total enclosures, and natural gas to provide supplemental fuel needed for stable operation of oxidizers. The nationwide increase in electricity usage is estimated to be 14,575,603 kWh/y and the nationwide incremental natural gas usage is estimated to be 110,605,249 scf/y.

2.0 INTRODUCTION

2.1 OVERVIEW

Under Section 112(d) of the Clean Air Act (the Act), the U.S. Environmental Protection Agency (EPA) is developing national emission standards for hazardous air pollutants (NESHAP) for the metal coil surface coating source category. The EPA is required to publish final emission standards for the metal coil surface coating source category by November 15, 2000.

The Act requires that the emission standards for new sources be no less stringent than the emission control achieved in practice by the best controlled similar source. For existing sources, the emission control can be less stringent than the emission control for new sources, but it must be no less stringent than the average emission limitation achieved by the best performing 12 percent of existing sources (for which the EPA has emissions information). In categories or subcategories with fewer than 30 sources, emission control for existing sources must be no less stringent than the average emission limitation achieved by the best performing 5 sources. The NESHAP are commonly known as maximum achievable control technology (MACT) standards.

The purpose of this document is to summarize the background information gathered during the development of the metal coil surface coating industry NESHAP.

2.2 PROJECT HISTORY

2.2.1 Regulatory Background

Federal regulations that apply to metal coil surface coating include a New Source Performance Standard (NSPS) under 40 CFR Part 60, Subpart TT, "Standards of Performance for Metal Coil Surface Coating", which is applicable to each prime coat operation, each finish

coat operation, and each prime and finish coat operation combined when the finish coat is applied wet on wet over the prime coat and both coatings are cured simultaneously. The coil coating NSPS regulates emissions of volatile organic compounds (VOC) and contains emission limits in several forms. If an emission control device is used on a continuous basis, VOC emissions are limited to 0.14 kilograms per liter (kg/*l*) of coatings solids applied or the owner or operator must reduce emissions by 90 percent for each affected facility for each calendar month. If an emission control device is not used, VOC emissions are limited to 0.28 kg/*l* for each affected facility for each calendar month. If an emission control device is used intermittently, VOC emissions are limited to a value between 0.14 kg/*l* (or a 90 percent reduction) and 0.28 kg/*l*. The NSPS was proposed on January 5, 1981 and promulgated on April 26, 1982. All coil coating lines that were modified or began construction or reconstruction after January 5, 1981 must be in compliance with the NSPS. At least 43 plants are subject to this NSPS.

In addition to the NSPS, EPA also published a Control Techniques Guideline (CTG) document [1] that covers metal coil surface coating operations. The CTG was intended as guidance for States in the development of State Implementation Plans (SIP). The CTG defined a model of reasonably available control technology (RACT) for coil coating operations, consisting of the coating application station, the curing oven, and the quench area as 0.31 kg VOC/*l* of applied coating (minus water and exempt solvents). This limit is based on the use of waterborne coatings or the use of coatings that contain 25 volume percent solids and an emission control system in which at least 90 percent of the emissions are captured and routed to a control device (incinerator) which achieves at least a 90 percent emission reduction.

The emission control requirements that the States impose on coil coating operations vary substantially among the different State Implementation Plans (SIPs). The SIPs for 24 States include the CTG VOC RACT limit of 0.31 kg/*l* of coating excluding water and exempt solvents. In nine other States, the SIP requires reductions equal to that required by the NSPS. California has separate emission limits for each of its Air Quality Management Districts. Most districts impose an emission limit of 0.20 kg/*l* of coatings (less water and exempt solvents). One district requires an overall reduction of 85 percent. Two States have emission limits of 0.48 kg/*l* of coating solids and one other State has a limit of 0.20 kg/*l* of coating excluding water and exempt

solvents. The remaining States do not have rules targeted specifically for coil coating operations.

None of the Federal and State regulatory efforts are specifically directed towards HAP, however, most HAP of concern in the metal coil surface coating industry are VOC and the same control devices used to limit VOC emissions are also applicable to HAP emissions. The primary use of HAP is as a solvent in the primers and coatings applied to metal coil. HAP are also present in some of the materials used for cleaning coating application equipment. The types of HAP used in the metal coil surface coating industry and the sources of HAP emissions are described in Chapter 3 of this document.

The MACT standards development for the metal coil surface coating industry began with a Coating Regulations Workshop for representatives of EPA and interested stakeholders in April 1997 and continues as a coordinated effort to promote consistency and joint resolution of issues common across nine coating source categories. The workshop covered eight categories: fabric printing, coating and dyeing; large appliances; metal can; metal coil; metal furniture; miscellaneous metal parts; plastic parts; and wood building products. The automobile and light duty truck project was started subsequently.

The first phase was one in which EPA gathered readily available information about the industry with the help of representatives from the regulated industry, State and local air pollution agencies, small business assistance providers, and environmental groups. The goals of the first phase were to either fully or partially:

- Understand the coating process
- Identify typical emission points and the relative emissions from each
- Identify the range(s) of emission reduction techniques and their effectiveness
- Make an initial determination on the scope of each source category
- Determine the relationships and overlaps of the source categories
- Locate as many facilities as possible, particularly major sources
- Identify and involve representatives for each industry segment
- Complete informational site visits
- Identify issues and data needs and develop a plan for addressing them
- Develop questionnaire(s) for additional data gathering and

- Document results of the first phase of regulatory development for each category.

The industry members that participated in the stakeholder process included members of the National Coil Coaters Association (NCCA), members of the Aluminum Association (AA), representatives of individual companies in the regulated industry, and representatives of companies that supply coatings to the industry. States that participated in the process included Florida, Illinois, and Pennsylvania. In addition, data were obtained from several other States including Georgia, Michigan, California, West Virginia, Indiana, and Ohio. The U.S. EPA was represented by EPA Region 5, the EPA Office of Air Quality Planning and Standards (EPA/OAQPS), the EPA Office of Enforcement and Compliance Assurance (OECA), the EPA Office of Pollution Prevention and Toxic Substances (OPPTS), and an EPA Small Business Ombudsman. A list of participants in the data collection effort is presented in Appendix A of this document.

The first phase of MACT standards development concluded with the drafting of a preliminary industry characterization (PIC) document for the metal coil surface coating industry. The information summarized in the PIC document can be used by States that may have to make case-by-case MACT determinations under Sections 112(g) or 112(j) of the Act. The initial phase of the regulatory development focused primarily on familiarizing the project team with metal coil surface coating operations, identifying plants that make up the industry, and investigating the emission control technologies in use by plants in the industry.

2.2.2 Data Gathering

Information presented in this document was collected from a variety of sources. Data collection began with a review of information collected by the Agency during development of the New Source Performance Standard (NSPS). A total of four meetings were held involving representatives of all stakeholders for the purpose of information exchange and the identification of potential data sources. A list of participants in the data collection effort is presented in Appendix A of this document. Information was also collected during site visits to four metal coil surface coating facilities that operate coil coating lines with a wide range of production rates. A telephone conference meeting was also held with the regulatory subgroup which is made up of

EPA and State representatives.

In the Spring of 1998, an information collection request (ICR) was developed for gathering information for the development of the metal coil surface coating industry MACT standard. The ICR was sent to 110 companies with coil coating operations identified through literature sources and stakeholder contacts. Responses were received from 119 facilities and can be summarized as follows:

- 26 facilities performed no coil coating
- 2 facilities coated only foil (<0.006 inch thickness)
- 7 facilities classified the entire response confidential business information (CBI)
- 2 facilities were not in operation.

Therefore, the ICR MACT database contained public information from 82 facilities which operate 133 coating lines.

Emissions and control information from the ICR MACT database are summarized in Chapter 3 and Chapter 4, respectively, of this document. The information on HAP emissions and controls served as the basis for the MACT floor determination described in Chapter 5 of this document.

2.3 REFERENCES

1. U. S. Environmental Protection Agency. Control of Volatile Organic Emissions from Existing Stationary Sources - Volume II: Surface Coating of Cans, Coils, Papers, Fabrics, Automobiles, and Light-Duty Trucks. Publication No. EPA-450/2-77-008. Research Triangle Park, NC. May, 1977. 232 pages.

3.0 METAL COIL COATING INDUSTRY PROFILE AND PROCESS DESCRIPTION [1,2]

3.1 GENERAL PROCESS DESCRIPTION

The metal coil surface coating source category includes any facility engaged in the surface coating of metal coil. In this process, a coil or roll of uncoated sheet metal is coated on one or both sides and repackaged as a coil or otherwise handled. Although the physical configuration of the equipment used in coil coating lines varies from one installation to another, the individual operations generally follow a set pattern. The coil coating process begins with a coil (or roll) of bare sheet metal and, in most cases, terminates with a coil of metal with a dried and cured coating on one or both sides. The metal strip is unrolled from the coil at the entry to the coil coating line and first passes through a wet section, where the metal is cleaned and may be given a chemical treatment to inhibit rust and promote adhesion of the coating to the metal surface. In some installations, the wet section may also contain an electrogalvanizing operation in which zinc is applied through an electroplating process to a steel substrate. After the metal strip leaves the wet section, it is squeegeed and air dried and then passes to a coating applicator station.

Coating application stations may be used to apply a variety of coatings. In addition to protective or decorative coatings, adhesives and printed patterns using ink may also be applied. The most prevalent operation includes the application of protective and decorative coatings to one or both sides of the metal strip using rollers. Following the coating application, the strip passes through an oven where the temperature is increased to the desired curing temperature of the coating. The strip is then cooled by a water spray, air spray, or combination of the two. If the line is a tandem line, the first coating application is a prime coat and the metal strip next enters another coating applicator station where a top or finish coating is applied by rollers to one or both

sides of the metal. The strip then enters a second oven for drying and curing of the top or finish coat. This is followed by another cooling or quench station. The finished metal strip is then normally rewound into a coil and packaged for shipment or further processing. In some cases, the coated metal strip may be cut rather than rerolled into a coil. Most metal coil surface coating lines have accumulators at the entry and exit that permit the strip to move continuously through the coating process while a new coil is mounted at the entry or a full coil removed at the exit. Figure 3-1 is a schematic diagram of a typical, tandem coil coating line.

For existing coil coating lines, processing speed varies considerably, with some lines having processing speeds as high as 1,200 feet per minute [3]. The widths of the metal strip vary from a few inches up to 6 feet, and thickness may vary from about 0.006 inch to more than 0.15 inch. The lower thickness of 0.006 inch has been considered to be the line of distinction between metal coil and foil. However, 5 facilities have been identified that process coiled metal with a thickness both above and below 0.006 inch. Three of these facilities process 5 percent foil on each line, the fourth facility processes less than 25 percent foil on one of 6 coating lines in the facility, and the fifth facility processes 86 percent foil on one of 9 coating lines in the facility. The processing of foil is considered to be part of the paper and other web surface coating source category. Thus, there is some overlap between coil coating processes and foil coating processes within individual coil coating facilities. Unless a facility reported 100% of its substrate(s) as being below 0.006 inch, the facility was considered to be part of the metal coil surface coating source category.

3.2 INDUSTRY PROFILE

A total of 110 companies performing metal coil surface coating operations were identified through literature sources and stakeholder contacts. Information collection requests (ICRs) were sent to each of these companies in the summer of 1998. The intent of the survey was to acquire data on HAP use and emission control in metal coil surface coating operations and associated ancillary activities such as storage of HAP-containing materials in tanks, wet section operations, equipment cleaning, and wastewater treatment.

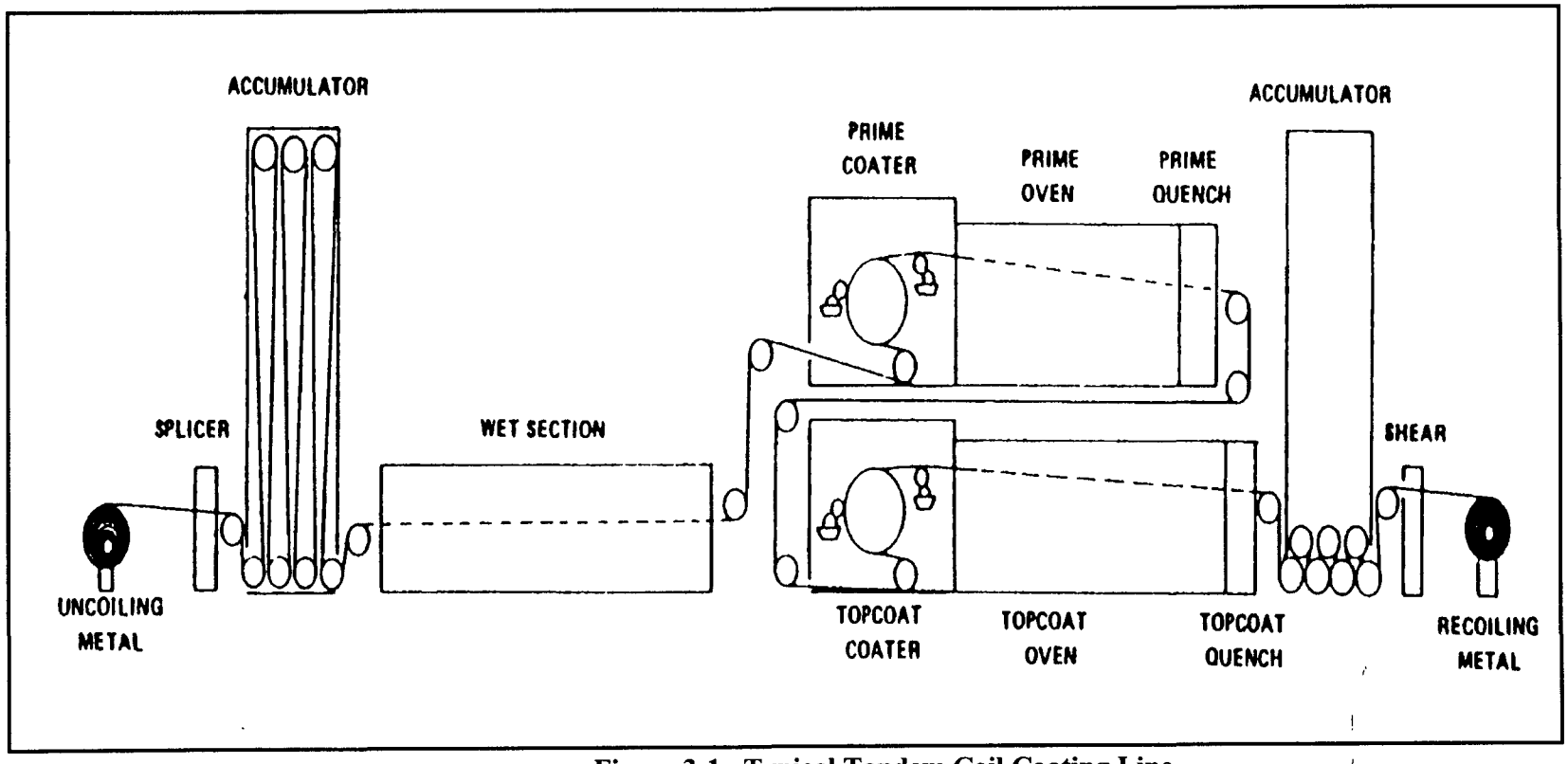

Figure 3-1. Typical Tandem Coil Coating Line

Responses were received from 119 facilities, of which 26 indicated that the facilities are not coil coaters, 2 provided information showing that the facility only coats foil, and two were not in operation in 1997. Therefore, 89 coil coating facilities returned completed questionnaires; 14 companies did not respond to the questionnaire.

The information collected from the metal coil surface coating industry was entered into a database. The metal coil surface coating MACT database (MACT database) contains a total of 82 facilities, excluding 7 facilities that classified the entire ICR response confidential business information (CBI). The MACT database facilities had a total of 125 coating lines reported. Appendix B of this document contains information on plant location, number of lines, type of control device used, and annual HAP emissions.

Major markets for coil coated metal include the transportation industry, building products industry, large appliance industry, can industry, and packaging industry. Other end products include coated tape rules, ventilation systems for walls and roofs, lighting fixtures, office filing cabinets, cookware, and sign stock. The industry has maintained a positive growth rate for a number of years as new end uses for precoated metal have continued to emerge.

Although coil coated metal is used in a wide variety of products, metal coil surface coating is typically not a product specific operation but rather is a distinct process. Many of the other surface coating source categories being regulated under section 112 of the Act are product specific, such as the metal can and large appliances source categories. For the purposes of standard development, the EPA considers any coil coating process, regardless of the end product, as part of the metal coil source category. Product-specific source categories include surface coating operations that are not coil coating processes.

Types of metal processed by the coil coating industry are mainly aluminum, cold rolled steel, cold rolled steel (galvanized on-line), hot-dipped galvanized steel, and galvalum/zincalum. Small quantities of other metals including brass are also coated. Coil coated metal is fabricated into end products after it is coated, thus eliminating the need for post-assembly painting. Toll and captive coaters represent the two basic industry divisions. Toll coaters produce metal that is coated in accordance with specifications of their customers. Captive coaters both coat the metal and fabricate it into end products within the same company. Examples of captive coaters are can manufacturers who have dedicated coil coating lines for metal used in the can manufacturing

process, and housing products manufacturers who coat the material for their products using company owned and operated coil coating lines. Some plants perform both toll and captive operations. Data from the MACT database indicate that approximately 40% of the facilities reported being toll coaters, 38% reported being captive coaters, and 22% reported performing both toll and captive coating.

3.3 COATINGS

The types of coatings applied in coil coating operations include a wide variety of formulations. Among the more prevalent types are polyesters, acrylics, fluorocarbons, alkyds, vinyls, epoxies, plastisols, and organosols. Table 3-1 lists the coatings commonly used in the industry and gives the approximate range of organic solvent content of each. In addition to these traditional coatings, adhesives, bondable backers, strippable protective coatings, lacquers, teflons, liquid rubber, graphite, kynar, latex, extruded synthetic rubber-based solid resins, and other non-traditional coatings are also used by the industry [5]. The majority of the coatings, estimated at about 85 percent [6], are organic solvent based and have solvent contents ranging up to 80 percent by volume with most being in the range from 30 to 70 percent. The remaining 15 percent of coatings are mostly of the waterborne type which also contain some organic solvents ranging from about 2 to 15 percent by volume [7]. While waterborne coatings are in use at a number of coil coating facilities, they are not available in formulations that are suitable for all end product applications. The choice of waterborne versus solvent borne coatings usually depends on the end use of the coated metal and the type of metal used. The most prevalent use of waterborne coatings is on aluminum used for siding in the construction industry. Other uses include printing plates, suspended ceiling systems, and body and endstock for food cans.

High-solids coatings in the form of plastisols, organosols, and powder are also used to some extent by the coil coating industry. Because these coatings have a lower organic solvent content, potential organic emissions are lower than from the other, more commonly used coatings. However, these coatings also have limited applicability and are not available in formulations suitable for use on all end products. Typical uses for these coatings are residential siding, drapery hardware, and other products.

Little data have been identified that represent the HAP content of coatings used in the

metal coil surface coating industry. Information provided by one of the coating suppliers [8] for three typical coatings showed HAP contents ranging from about 5 to 28 percent by weight. Reported data from the MACT database indicate that HAP contents for all coatings used in the coil coating industry range from 0 to 95 percent by weight, with an average reported value of approximately 16 percent.

Table 3-1. Typical Coatings Used in Metal Coil Surface Coating

Coatings	Volatile Content (Weight %)
Acrylics	40-45
Adhesives	70-80
Alkyds	50-70
Epoxies	45-70
Fluorocarbons	55-60
Organosols	15-45
Phenolics	50-75
Plastisols	5-30
Polyesters	45-50
Silicone Acrylics & Polyesters	35-60
Urethanes	60-75
Inks	50-65
Solution Vinyls	75-85
Vinyls	60-75

Source: Reference 4.

3.4 PROCESS DESCRIPTIONS, CURRENT INDUSTRY PRACTICES, AND EMISSION SOURCES

Although specific steps in a coil coating operation differ between plants, most have a common series of steps that include storage and handling of raw materials and a coating line that includes a wet section and one or more coating operations consisting of a coating application station, a curing oven, and a quench area. Most plants also generate wastewater and have some

type of wastewater treatment system. The following paragraphs provide brief descriptions of the common operations found on coil coating lines and provides general information regarding potential HAP emissions.

3.4.1 Storage and Handling of Coatings and Other Materials

Many of the coatings, solvents, and wet section chemicals are delivered and stored in 55 gallon drums but may also be delivered and stored in totes, which are transportable containers with a capacity generally in the range of from 200 to 500 gallons. Some plants also receive raw materials in bulk by tank trucks or rail cars and store the materials in bulk storage tanks. These tanks may be located inside a building or may be outdoors either above ground or underground. For raw materials delivered and stored in drums or totes, no emissions should occur during normal storage provided that they typically are kept sealed and generally do not leak. Emissions would only occur when the drums or totes are opened.

Where coatings are delivered by tank truck or rail car, working loss emissions occur when the coatings are pumped from the delivery vehicle to bulk storage tanks. Some tanks are vented to the tank trucks while they are being filled, thus making working losses negligible. During storage, daily temperature fluctuations generate breathing loss emissions. Breathing losses would be expected to be low for tanks that are underground or enclosed in controlled temperature environments relative to tanks that are outdoors, above ground and exposed to diurnal temperature cycles. Based on data from the MACT database, emissions from storage tanks account for approximately 2% of nationwide HAP emissions from metal coil surface coating operations.

Before application of the coatings to the coil, the coatings are typically stirred. They may also be thinned with solvent to adjust the viscosity. In some cases, coatings are mixed together. One example is mixing to achieve a particular color. Another example is the blending of excess coatings together to use as a backer. Another coating modification operation, intermixing, involves adding ingredients to perform coating color tinting (with no pigment dispersion). Data from ICR responses indicate that emissions from mixing and thinning account for approximately 3.5% of nationwide HAP emissions from metal coil surface coating operations.

3.4.2 Wet Section Pretreatment

The wet section of a metal coil surface coating line includes cleaning steps that may use

water, caustic cleaners, brushing, or acid treatment. Processes may include spray applications of materials or may include submersion of the metal strip. Specific processes included in the wet section depend on the type of metal substrate, characteristics of the coatings to be applied, and other parameters. The chemical treatments used in the wet section may contain HAP. Data from ICR responses indicate that HAP emissions from wet section operations account for approximately 0.29% of nationwide HAP emissions from metal coil surface coating operations.

3.4.3 Coating Application Stations

At the coating application stations, coatings are applied by rollers to one or both surfaces of the metal strip as it passes through the station. Emissions of HAP occur when HAP-containing solvents contained in the applied coatings evaporate. It is estimated that between 0 and 15 percent of the coating solvent evaporates at the coating station [9]. Data from the MACT database indicate an average of approximately 9.1 percent of coating solvent evaporation taking place at the coating station. If HAP-containing cleaning solvents are used, emissions of HAP also occur during cleaning of the paint rollers and other parts of the application station between coating sessions or when a color change is made. Cleaning may be carried out in place using solvent and rags, or portions of the coaters may be removed for cleaning. Data for HAP emissions from parts and equipment cleaning were available for 40 percent of the facilities that returned ICR responses. For these facilities, parts and equipment cleaning HAP emissions account for approximately 4 percent of nationwide HAP emissions from metal coil surface coating operations.

At many plants, the coating application stations are enclosed in rooms. Because air is drawn into the ovens from these rooms, it is generally believed that a large fraction, and in some cases all, of the solvent that evaporates in this area is captured by the ovens. Hoods or "snouts" may be used to increase the fraction of solvent emissions captured by the ovens. Plants may also use smaller coating station enclosures, which require less ventilation air, and are not occupied by workers except when the enclosure is opened for maintenance or inspection. On lines that do not have coating rooms or smaller enclosures, an exhaust hood is frequently installed directly over the roll coaters to exhaust the solvent that evaporates in that area. In these cases, the hoods may be exhausted to the ovens, a control device, or to the atmosphere. Some plants do not use hoods or enclosures around the coating application stations; therefore, the majority of the solvent evaporated at the coating station would be emitted to the atmosphere. Data from the MACT

database indicate that permanent total enclosures, partial enclosures, hoods, floor sweeps, extra ventilation to control devices, walls around coating stations, and oven extensions are used throughout the metal coil coating industry as enclosure and capture methods.

3.4.4 Curing Ovens

After coatings are applied to the surface of the metal strip, the strip enters an oven where heat is applied to evaporate the organic solvent and water contained in the applied coatings. An estimated 85 to 100 percent of the organic solvent content of applied coatings evaporate inside the curing ovens [10]. Data from the MACT database indicate an average of approximately 90 percent of the organic solvent content of applied coatings evaporating inside the curing ovens. Most curing ovens used in coil coating operations are direct fired and use natural gas as fuel. Many ovens are designed to use propane as a backup fuel in case of natural gas curtailments. Ovens heated by fuel oil or electricity are used in some plants, but to a much lesser extent than those heated by natural gas. The heat input to the ovens must be sufficient to evaporate the solvent in the coatings, to bring the metal and coatings up to the design temperature, usually in the range of 375 to 600 °F, to replace the heat lost from the ovens by radiation and conduction, and to heat dilution air to oven operating temperature. Oven ventilating air (or dilution air) is normally the largest single factor in the total oven heat load. Data from the MACT database indicate an average oven exhaust gas temperature of approximately 560 degrees Fahrenheit.

Solvent borne coatings, if uncontrolled, would result in higher organic emissions from the oven than either waterborne coatings or high solids coatings. Emissions of HAP compared to organic emissions depend on the proportion of HAP as compared with non-HAP solvents in the coatings.

3.4.5 Quench Area

When the metal strip exits the curing oven, it is cooled, usually by a water spray, an air spray, or a combination of the two before being repackaged as a coil or passing to another coating station. An estimated 0 to 2 percent of the organic solvent in the applied coatings is released in the quench area [11]. Data from ICR responses indicate an average of approximately 0.6 percent of the organic solvent in the applied coatings is released in the quench area. The quench area is normally an enclosed area adjacent to the exit from the curing oven and a large fraction of the emissions released in this area are estimated to be captured by the oven ventilation system.

However, at some plants, the quench area is vented directly to the atmosphere.

3.4.6 Wastewater Handling and Treatment

Most plants generate wastewater from wet section operations, quenching operations, or both. Based on data from ICR responses, organic solvents are not typically used in the wet section. Consequently, not much organic solvent gets into plant wastewater. Response data from the ICRs indicate that wastewater handling and treatment operations account for approximately 0.07 percent of nationwide HAP emissions from metal coil coating operations. Coil coating wastewater may contain chromium compounds, but the potential for air emissions of these compounds is small. Wastewater may also be generated by clean up activities at plants that use waterborne coatings.

3.4.7 Baseline Emissions

Information collection requests were sent to 110 companies performing metal coil coating operations that were identified through literature sources and stakeholder contacts. Responses were received from 119 facilities. Twenty-six of those facilities indicated that they are not coil coaters, 2 provided data showing that the facility coats foil only, and two facilities were not in operation in 1997. Therefore, 89 coil coating facilities returned completed ICRs; 14 companies did not respond to the questionnaire. The surveyed facilities were asked to provide facility HAP emissions from metal coil surface coating operations as well as HAP emissions from specific unit operations associated with metal coil surface coating. Total nationwide HAP emissions from metal coil surface coating operations were calculated to be 2484 tons in 1997 by summing facility HAP emissions reported by these facilities.

3.5 REFERENCES

1. U.S. Environmental Protection Agency. Metal Coil Surface Coatings MACT Docket Number A-97-47 Item Numbers II-D-1 through II-D-113. ICR Responses. Office of Air Quality Planning and Standards. Research Triangle Park, NC. Responses received September 1998-April 1999.

2. U.S. Environmental Protection Agency. Metal Coil Surface Coating Industry-Background Information for Proposed Standards. Office of Air Quality Planning and Standards. Research Triangle Park, NC. EPA-450/3-80-035a. October 1980.

3. Reference 1.

4. Reference 2, p. 3-4 updated with information from Reference 1.

5. Reference 1.

6. Reference 2, p. 3-2.

7. Reference 2, p. 3-2 and 3-5.

8. Letter from Jelf, III, William E., Akzo Nobel Coatings, Inc. to Lacy, Gail, US EPA. September 12, 1997. Data sets for three (3) typical coil coatings.

9. Reference 2, p. 3-7.

10. Reference 9.

11. Reference 9.

4.0 EMISSION CONTROL TECHNIQUES [1,2]

4.1 INTRODUCTION

The emission reduction techniques in use by the metal coil coating industry that have been identified to date primarily are related to coating application and curing ovens. There are two main approaches to limiting HAP emissions in the coil coating industry. The approach most commonly used is to improve capture and control systems. For most coil coating facilities in the industry, oven emissions are typically controlled by the use of thermal or catalytic incinerators which may be located inside or outside the ovens. Most plants employ some form of heat recovery to improve the overall energy efficiency of the coil coating operation. The second approach, focusing on pollution prevention, involves using low-HAP or HAP-free materials.

4.2 CAPTURE SYSTEMS

Capture systems are designed to collect solvent-laden air and direct it to a control device. At many coil coating facilities, the coating application stations are enclosed in rooms. If a source of emissions is contained in a room or building such that the entire ventilation air is directed to the control device, the capture efficiency is essentially 100 percent [3]. This type of capture system is called a permanent total enclosure (PTE). EPA Test Method 204 outlines the five criteria necessary for operating a PTE; briefly, they are as follows:

- Any natural draft opening (NDO) shall be at least 4 equivalent opening diameters from each emission source. An equivalent diameter is equal to the diameter of a circle that has the same area as the opening.
- The total area of combined NDOs shall not exceed 5% of the total surface area the enclosure including the floor and ceiling.

- The average face velocity (FV) of air through the NDOs shall be at least 200 feet per minute and the direction of flow shall be into the enclosure.
- All access doors and windows not included as NDOs shall be closed during routine operation of the process.
- All exhaust gases from the enclosure must be directed to a control device [4].

Data from the MACT database indicate that approximately 49 percent of the surveyed facilities use permanent total enclosures.

The MACT database information also indicates that partial enclosures, hoods, floor sweeps, extra ventilation to control devices, walls around coating stations, and oven extensions are used throughout the metal coil coating industry as enclosure and capture methods. According to the responses, approximately 19 percent of the surveyed facilities use at least partial enclosures, 24 percent reported the use of at least hoods, 14 percent reported using at least floor sweeps, approximately 20 percent reported at least the use of extra ventilation to a control device, 10 percent reported at least the presence of walls around coating stations, 29 percent reported using at least oven extensions, and approximately 7 percent reported "other", with those answers ranging from "enclosed room under negative pressure with an exhaust fan that is discharged into the oven" to "applicator is open, oven exhaust uncontrolled."

4.3 CONTROL DEVICES

Oven emissions in the coil coating industry are typically controlled by the use of thermal or catalytic incinerators. These devices may be located inside or outside the curing ovens. Data from the MACT database indicate that 72 facilities operate incinerators on their coating lines; 10 facilities reported operating with no incinerators. There were 105 controlled coil coating lines; of the 105 controlled lines, 79 lines were controlled with thermal incinerators and 24 lines with catalytic oxidizers. Two lines were controlled with condenser/scrubber systems. In general, all of the metal coil surface coating facilities with control devices that responded to the survey have similar capture and control systems. The reported data on capture and control device destruction efficiency consisted of test data, mass balance comparisons, vendor guarantees, and engineering judgement.

4.3.1 Thermal Incineration

Thermal incinerators use a flame combined with a chamber to convert HAP-containing, solvent-laden air into carbon dioxide and water. An incinerator typically consists of a refractory-lined chamber equipped with one or more sets of burners. The contaminated airstream is passed through the burners and heated above its ignition temperature. The hot gases then pass through one or more residence chambers where they are held for a certain length of time to ensure complete combustion [5].

The most important factors to consider in the operation of a thermal incinerator are combustion temperature and residence time because these parameters determine the incinerator's destruction efficiency. In addition, at a given temperature and residence time, destruction efficiency is also affected by the degree of turbulence (mixing) of the emission stream and heated combustion gases in the incinerator [6]. Data in the MACT database indicate that metal coil coating facilities typically operate incinerators at a temperature of 1400 degrees Fahrenheit. Most facilities also employ continuous monitoring for this parameter.

Destruction efficiencies of up to 99+ percent are achievable with thermal incineration at inlet stream HAP concentrations as low as 100 parts per million by volume (ppmv). Even though they accommodate small fluctuations in flow, thermal incinerators are not well suited for streams with highly variable flow because reduced residence time and poor mixing caused by increased flow conditions decrease the completeness of combustion; this causes the combustion chamber temperature to fall and decreases destruction efficiency [7].

Thermal incineration is typically applied to emission streams that are dilute mixtures of HAP and air. In these cases, due to safety considerations, the concentration of pollutants is routinely limited by insurance companies to 25 percent of the lower explosive limit (LEL) for the pollutant(s) in question. The LEL for a flammable vapor is defined as the minimum concentration in air or oxygen at and above which the vapor burns upon contact with an ignition source and the flame spreads through the flammable gas mixture [8]. Thus, if the pollutant concentration is high, dilution may be required.

The heating of the exhaust stream to the high incineration temperatures requires large amounts of energy unless some means of heat recovery is incorporated into the system. Several concepts of heat recovery are used in the coil coating industry. These include direct recycle of a

portion of the oven atmosphere through internal oven burners or incinerators, the use of regenerative heat exchangers, and the use of recuperative heat exchangers. Waste heat boilers are also employed in conjunction with some of these systems. Steam from these boilers can be used in the wet section of the coil coating line or in other processes in the facility.

Data from the MACT database indicate that 11 percent of the facilities reporting control device data reported the use of regenerative oxidizers. Likewise, 7 percent reported the use of recuperative oxidizers. Reported data from the MACT database indicate an average value of heat recovery of 39 percent.

4.3.2 Catalytic Incineration

Catalytic incinerators operate on the same basic principles as thermal oxidizers but contain a catalyst. The catalyst causes the oxidation reaction between the solvent and air to occur at a lower temperature for the same solvent concentration and composition; therefore, catalytic units require less fuel to heat the oven exhaust gases to combustion temperatures, and they have a lower exhaust temperature than equivalent thermal incinerators.

Installation costs for catalytic incinerators are comparable to those of thermal oxidation units, but catalytic incinerators are generally smaller than equivalent thermal systems, resulting in a space savings over a thermal system. These savings are offset by the cost of the catalysts, which are noble metals or metal oxides. One of the most commonly used catalysts is platinum and its salts.

In some situations, problems may be encountered with the use of catalytic incineration systems. The major problem is catalyst deactivation. Materials such as phosphorus, bismuth, lead, arsenic, antimony, mercury, iron oxide, tin, zinc, sulfur, and halogens in the emission stream can poison the catalyst and adversely affect its performance. Some of these elements may be present in the pigments used in some coil coatings. The catalyst may be masked by high molecular weight organics, alumina, and silica dusts and may be suppressed by halogens and sulfur, each of which can be present in some coating formulations. However, recent advances have produced catalysts that are relatively tolerant of compounds containing sulfur or chlorine. These new catalysts are single or mixed metal oxides that are supported by a mechanically strong carrier. Catalysts such as chrome/alumina, cobalt oxide, and copper oxide/manganese oxide have been demonstrated to control emission streams containing chlorinated compounds. When a

catalyst becomes deactivated or masked, it must be regenerated or cleaned. The time necessary for cleaning/regeneration can vary from a few hours to a day. Catalyst life is limited by thermal aging and loss of active sites by erosion, attrition, and vaporization. With proper operating temperatures and temperature control, these processes are normally slow, and satisfactory performance can be maintained for 2 to 5 years before replacing catalysts [9].

Factors affecting the performance of catalytic incinerators are: 1) operating temperature (operating temperature at the catalyst bed inlet and the temperature rise across the catalyst bed), 2) space velocity (reciprocal of residence time), 3) pollutant composition and concentration, 4) catalyst properties, and 5) presence of poisons/catalyst inhibitors in the emissions stream. The operating temperature for a particular destruction efficiency is dependent on the concentration and composition of the pollutant in the emission stream and the catalyst type. Typically, the concentration of flammable vapors in HAP emission streams containing air is limited to less than 25 percent of the LEL for safety requirements [10].

Space velocity is the volumetric flow rate of the combined gas stream (i.e., emission stream, supplemental fuel, and combustion air) entering the catalyst bed divided by the volume of the catalyst bed. At a given space velocity, increasing the operating temperature at the inlet of the catalyst bed increases destruction efficiency. At a given temperature, as space velocity decreases (i.e., as residence time in the catalyst bed increases), destruction efficiency increases. Catalytic incinerators can achieve overall destruction efficiencies for HAP of about 95 percent with space velocities in the range of 30,000-40,000 hr^{-1} with precious metal catalysts, or 10,000-15,000 hr^{-1} with base metal catalysts. However, larger catalyst volumes and/or higher operating temperatures are required to achieve higher destruction efficiencies (i.e., 99 percent). The 95 percent destruction efficiency can be achieved at inlet stream HAP concentrations of 100 ppmv [11].

After oxidation of the emission stream, the energy in the flue gases leaving the catalyst bed may be recovered. Ways of recovering flue gases include 1) use of a recuperative heat exchanger to preheat the emission stream and/or combustion air, or 2) by use of the available energy for process heat requirements (e.g., recycling flue gases to the process, producing hot water or steam, etc.).

Traditionally, the industry members that have found catalytic incineration suitable for their operations are the captive coaters that coat only a few different products with a limited number of

coatings. These coaters can control the coating materials used to insure that no chemical poisons are present to deactivate the catalysts. In contrast, for toll coaters, who must often use a wider variety of coatings specified by their customers, the chance of catalyst poisons being introduced into the catalytic incineration system is proportionately greater. Data from the MACT database indicate that 75 percent of the facilities reporting catalytic incinerator use reported being captive coaters with an average of 99.5 percent by weight of coatings applied in captive processes.

4.4 PERFORMANCE OF CONTROLS

The information concerning the level of HAP emissions from coating application and curing collected in the metal coil surface coating MACT survey included the capture efficiency for each coating application area or for the entire coating line and the destruction efficiency of the control device receiving the HAP emissions. The data from the MACT database indicate capture efficiencies ranging from 86.4 percent up to 100 percent and destruction efficiencies ranging from 84 percent up to 99.99 percent. The industry-wide average capture efficiency is 97.3 percent and the industry-wide average destruction efficiency is 96.9 percent.

4.5 POLLUTION PREVENTION MEASURES

Pollution prevention involves reducing or eliminating waste where it originates and includes practices that increase efficiency in the use of raw materials. In the metal coil coating industry, pollution prevention measures include the use of waterborne coatings, powder coatings, and work practices/housekeeping alternatives.

According to data in the MACT database, the average HAP content of solvent-borne coatings used in the metal coil coating industry is greater than 40 percent. One method of reducing HAP emissions from the metal coil coating process is to use coatings that have been reformulated to contain less HAP. To this end, several facilities in the coil coating industry use waterborne coatings exclusively. Data from the MACT database indicate that 10 facilities use only waterborne coatings. For these facilities, the average by-weight HAP content of the coatings ranged from 0.1 percent to 15.7 percent. The average value for the 10 facilities using only waterborne coatings was 5.1 percent. The data in the MACT database also indicate that for 30 coil coating lines, at least 50 percent by volume of the coatings applied were waterborne coatings.

The average by-weight HAP content of these coatings was 5 percent.

Powder coatings have not been used to an appreciable extent in the coil coating industry, presumably due to technical problems in application and the limited selection of suitable coatings for metal coil coated products. No facilities in the MACT database use powder coatings.

Work practices and housekeeping involve human activities undertaken to reduce emissions or waste such as operator training, management directives, and work procedures or other techniques for conducting emission or waste generating processes. Data from the MACT database reveal that several types of work practices and housekeeping techniques are being used, including the following:

- Improving substrate pretreatment methods to control the amount of chemicals being discharged for treatment
- Optimizing production run scheduling to generate long production runs per color to reduce color changeovers
- Keeping all containers covered at all times except during filling and emptying operations
- Cleaning coating rolls and pans inside enclosed coating booths to insure that emissions are captured and controlled
- Keeping all solvent soaked rags in closed containers
- Reducing paint spillage when filling totes
- Improving paint inventory systems by tracking and recording paint consumption on a revised manufacturing order which facilitates the prioritization of drums of paint such that the shelf life is not exceeded, thus reducing the amount of hazardous waste resulting from degraded paint
- Conducting employee training and awareness programs to aid in the implementation of process changes designed to minimize paint related waste generation
- Conducting training and department housekeeping inspections.

Based on data collected in a survey conducted by the National Coil Coaters Association (NCCA) [12], the following work practices were identified for coating line cleanup operations:

- Cleaning solvent is typically transferred into closed containers which are then used to dispense the solvent at the production line

- Soak tanks used for cleaning rollers or other miscellaneous parts removed from the line are typically equipped with covers
- Containers that are typically used to collect liquid waste are typically equipped with covers
- Solvent soaked rags are stored in closed containers or are compressed to remove free solvent before storage.

The NCCA's data analysis also indicated that open top containers or vessels were typically used for mixing and blending and the majority of the plants were conducting mixing and thinning operations in areas of the plant that were not vented to a control device.

4.6 REFERENCES

1. U.S. Environmental Protection Agency. Metal Coil Surface Coatings MACT Docket Number A-97-47 Item Numbers II-D-1 through II-D-113. ICR Responses. Office of Air Quality Planning and Standards. Research Triangle Park, NC. Responses received September 1998-April 1999.

2. U.S. Environmental Protection Agency. Metal Coil Surface Coating Industry-Background Information for Proposed Standards. Office of Air Quality Planning and Standards. Research Triangle Park, NC. EPA-450/3-80-035a. October 1980.

3. Olestad, Andrew. Fugitive VOC Capture Systems using the "Total Permanent Enclosure Concept". Paper No. 93-TA-33.03, presented at the Air and Waste Management Association Annual Meeting and Exhibition. Denver, Colorado. June 1993.

4. Bemi, Dan. "Demonstrating VOC Capture Efficiency Using Permanent Total Enclosure Technology: Common Practices, Challenges and Rewards." Paper No. 97-TA4B.04, presented at the Air and Waste Management Association Annual Meeting and Exhibition. Toronto, Ontario, Canada. June 1997.

5. U.S. Environmental Protection Agency. APTI Course 415 Control of Gaseous Emissions. EPA 450/2-81-005. Air Pollution Training Institute, Environmental Research Center. Research Triangle Park, NC. December 1981.

6. U.S. Environmental Protection Agency. Control Technologies for Hazardous Air Pollutants Handbook. EPA/625/6-91/014. Office of Research and Development. Washington, DC. June 1991. p. 4-2.

7. Reference 6, p. 3-2 and 3-3.

8. Reference 6, p. 4-3.

9. Reference 6, p. 3-3.

10. Reference 6. p. 4-12.

11. Reference 6. p. 3-2.

12. Environmental Resources Management. Metal Coil Surface Coating ICR Data Analysis and MACT Floor Proposals. June 2, 1999.

5.0 MODEL PLANTS AND COMPLIANCE OPTIONS

5.1 INTRODUCTION

This chapter presents the five model plants developed as parametric descriptions of the coating application and curing operations on a metal coil surface coating line and the approach followed to specify the model plants. This chapter also presents the MACT floor determination for the metal coil surface coating source category and the compliance options representing the MACT floor. No options more stringent than MACT floor were identified.

The model plants were used to estimate the control costs presented in Chapter 7 and the environmental and energy impacts presented in Chapter 6 resulting from conformance with the compliance options.

5.2 MODEL PLANTS [1,2]

The coatings applied in the metal coil surface coating industry can be classified as solvent-borne and waterborne, with the vast majority of the coatings applied being solvent borne. Volume of solids applied annually was determined to be the best parameter in the database to serve as the basis for the size of the coating line applying solvent-borne coatings. Therefore, the volume of solids applied was used to define four different sizes of model plants. The coating lines applying solvent-borne coatings in facilities in the database were grouped by volume of solids applied annually as follows:

- Model Plant No. 1, less than 50,000 gallons of solids applied per year
- Model Plant No. 2, between 50,000 and 100,000 gallons of solids applied per year
- Model Plant No. 3, between 100,000 and 200,000 gallons of solids applied per year

- Model Plant No. 4, more than 200,000 gallons of solids applied per year.

For each size model plant, average values across the coating lines in each size category were calculated for each parameter used to describe the model plant. Tables 5-1 through 5-4 present the model plant parameters for the four different sizes of model plants representing coating lines applying solvent-borne coatings.

Five plants have been identified in the metal coil surface coating database that apply only waterborne coatings and do not use add-on controls to reduce HAP emissions from coating. Since the emission characteristics are different for waterborne coatings compared to solvent-borne coatings and for four of the facilities, the HAP emissions are considerably lower than for Model Plants 1 through 4, a fifth model plant was defined to represent a coating line applying waterborne coatings. Average values across the waterborne coating lines were calculated for each parameter used to describe the model plant. Table 5-5 presents the parameters for the waterborne coating line model plant.

Table 5-1. Model Plant Parameters for Model Plant No. 1

Annual operating time:	4270 hours
Annual coating time [a] :	2990 hours
Annual gallons of solids applied:	13,700 gallons
Coating:	Solvent-borne, 35% HAP by weight; 41% solids by weight
Ovens [b] :	
Number	1
Maximum solvent concentration	25% LEL
Solvent capacity	56 gallons/hour
Air flow	9333 ACFM
Exhaust temperature	410 °F

[a] Annual coating time is estimated to be 70% of annual operating hours.

[b] Parameters are given on a per oven basis.

Table 5-2. Model Plant Parameters for Model Plant No. 2

Annual operating time:	5300 hours
Annual coating time [a] :	3710 hours
Annual gallons of solids applied:	79,500 gallons
Coating:	Solvent-borne, 40% HAP by weight; 35% solids by weight
Ovens [b] :	
Number	1
Maximum solvent concentration	25% LEL
Solvent capacity	51 gallons/hour
Air flow	8500 ACFM
Exhaust temperature	515 °F

[a] Annual coating time is estimated to be 70% of annual operating hours.

[b] Parameters are given on a per oven basis.

Table 5-3. Model Plant Parameters for Model Plant No. 3

Annual operating time:	7700 hours
Annual coating time [a]:	5390 hours
Annual gallons of solids applied:	129,000 gallons
Coating:	Solvent-borne, 41% HAP by weight; 49% solids by weight
Ovens [b] :	
Number	2
Maximum solvent concentration	25% LEL
Solvent capacity	88 gallons/hour
Air flow	14,700 ACFM
Exhaust temperature	710 °F

[a] Annual coating time is estimated to be 70% of annual operating hours.

[b] Parameters are given on a per oven basis.

Table 5-4. Model Plant Parameters for Model Plant No. 4

Annual operating time:	7700 hours
Annual coating time [a] :	5390 hours
Annual gallons of solids applied:	293,000 gallons
Coating:	Solvent-borne, 13% HAP by weight; 59% solids by weight
Ovens [b] :	
Number	2
Maximum solvent concentration	25% LEL
Solvent capacity	98 gallons/hour
Air flow	16,300 ACFM
Exhaust temperature	470 °F

[a] Annual coating time is estimated to be 70% of annual operating hours.

[b] Parameters are given on a per oven basis.

Table 5-5. Model Plant Parameters for Model Plant No. 5

Annual operating time:	2660 hours
Annual coating time [a] :	1860 hours
Annual gallons of solids applied:	40,300 gallons
Coating:	Water-borne, 3.5% HAP (glycol ethers) by weight; 49% solids by weight
Ovens:	
Number	1
Solvent capacity	1.4 gallons/hour (14 gallons water/hour)
Air flow	6650 ACFM
Exhaust temperature	295 °F

[a] Annual coating time is estimated to be 70% of annual operating hours.

5.3 COMPLIANCE OPTIONS

5.3.1 Criterion for Evaluating HAP Emission Reductions from Metal Coil Surface Coating Operations

The MACT floor for metal coil surface coating was evaluated on an emission source or unit operation basis rather than on a plant-wide basis, because, in general, the facilities in the metal coil surface coating source category capture and control emissions from their HAP emission sources in this same manner.

From a HAP emission source analysis of the metal coil surface coating survey responses, it was found that coating application and curing are the largest sources of HAP emissions at metal coil surface coating facilities. On a nationwide basis, the portion of total facility HAP emissions attributed to coating application and curing by respondents to the metal coil surface coating MACT survey was approximately 90 percent.

Other sources of HAP emissions associated with metal coil surface coating include storage tanks, wet section operations, coating mixing/thinning operations, quenching, parts and equipment cleaning, and wastewater operations. Few of the surveyed facilities reported controlled HAP emissions from these sources, though some facilities reported the use of work practices that are not attributed with a numerical level of control to limit HAP emissions. For facilities that reported control of HAP emissions from these sources, the data were not sufficiently detailed to determine if the reported control represented the facility level of control or the control for one unit operation of this type out of several in the facility. For example, mixing may be performed in a mix room and at the application station. It was not clear from the responses if a facility reporting mixing in a permanent total enclosure vented to a control device conducted all mixing at this level of control or possibly just the mixing at the coating application station. The limited data available from the metal coil surface coating survey for these operations is inadequate to determine floor levels of control.

The information concerning the level of HAP emissions from coating application and curing collected in the metal coil surface coating MACT survey included the capture efficiency for each coating application area or for the entire coating line and the destruction efficiency of the control device receiving the HAP emissions. The OCE for the coating line application and curing could be calculated from this information. Because this information was the value that was most

common among all the data available, and because it was determined that the coating application and curing OCE was the value that was most correlated with HAP emissions, coating application and curing OCE was used as the basis for the MACT floor calculations for coating lines. The application and curing OCE for the facilities in the MACT floor was calculated as a facility-wide average, to incorporate the effects of averaging across coating lines in facilities with more than one coating line.

5.3.2 Consideration of Data Quality in Evaluating HAP Emission Reductions from Metal Coil Surface Coating HAP Sources

There are a number of data quality issues that were considered in determining the MACT floor for the metal coil surface coating industry. These issues raised questions concerning the representativeness of the data in terms of what OCE the facilities can achieve in daily operations and over the entire year versus what facilities report; the quality of the metal coil surface coating capture efficiency data; and the practical limitations of coating line capture systems.

5.3.2.1 Representativeness of the Control Device Performance Data in the Metal Coil Surface Coating MACT Database.

The metal coil surface coating industry has noted that reported destruction efficiencies can differ from those actually achieved in daily operation. The industry reports that efficiencies determined by testing are generally measured during the initial compliance test, when the control device is new [3]. Destruction efficiency will gradually degrade with age (e.g., because of leaking heat exchangers or leaking isolation valves), so that the reported destruction efficiency may not be representative of the efficiency actually being achieved by control devices that have been in operation several years. Furthermore the industry notes that when a facility reports an efficiency based on testing, it is usually based on test methods that call for averaging the results of three source tests of the inlet and outlet emissions from the control device. These tests are generally relatively short in duration (approximately one hour). Depending on the conditions of operation during these tests, e.g., inlet HAP loading to the control device, the control efficiency data acquired from the metal coil surface coating industry may not be representative of control device performance over the entire range of normal facility operation and over longer time periods.

An important operating parameter at metal coil surface coating facilities that can cause control device test results to differ from control device performance during normal operation is

the variation in loading rates. It is possible that during compliance tests, the inlet HAP loading (i.e., the amount of HAP volatilized from the metal coil surface and exhausted to the control device) is much higher than it is during normal operations. This situation may result in artificially high destruction efficiency rates achieved during testing. For example, thermal oxidizers typically achieve high levels of control, such as the greater than 99 percent destruction efficiencies reported by some facilities in the MACT database, when their inlet loadings are high. Therefore, it is possible that differences in reported destruction efficiencies in the metal coil coating database may only be a result of variation in test conditions. The wide range of inlet loadings (from less than 100 ppmv to 14,000 ppmv) reported by metal coil surface coating facilities and the range of inlet loadings reported by individual facilities (as much as 3000 ppmv difference between minimum and maximum loadings) indicate that inlet loadings do fluctuate because of the batch nature of the coating process (i.e., different products with different coating specifications are often produced on the same line throughout the day). Therefore, inlet loadings will likely often be lower than the inlet loading when the facility undergoes source testing for compliance purposes.

As a step in the data validation process, available literature was reviewed and thermal oxidizer vendors were contacted to determine maximum destruction efficiencies that could be expected for thermal oxidizers [4]. The literature review on thermal oxidizers indicated that 99 percent destruction efficiency is achievable under ideal conditions, but that lower efficiencies are typically achieved under normal operating conditions. For example, the alternation between beds in a regenerative thermal oxidizer typically results in somewhat lower destruction efficiencies than are achieved in a conventional recuperative thermal incinerator, generally below 99 percent [5]. The lower destruction efficiency for regenerative thermal incinerators has been attributed in part to valve leaks within the system.

Telephone surveys of thermal oxidizer manufacturers indicated that 98 percent is the routine guarantee for regenerative or recuperative thermal oxidizers. Typically, this guarantee only covers the first year of operation due to potential destruction efficiency degradation caused by operational factors [6]. Vendors confirmed that long-term performance likely degrades because of leakage problems. Typically, vendors reported that untreated gas leaks into the treated gas stream through deterioration of heat exchange systems or leakage through isolation valves used on multiple chamber regenerative units. In addition, a study conducted by EPA [7] concluded that

98 percent VOC reduction, or 20 ppmv by compound exit concentration is the highest control level achievable by all new incinerators, even though individual units may achieve higher efficiencies. This level is expressed as both percent reduction and ppmw to account for the leveling off of exit concentrations as inlet concentrations drop below 2000 ppmw.

Because of the practical limitations of the metal coil surface coating survey and other industry research, information on the specific test conditions for the control efficiency data collected was not available. For this reason and the various factors described above, the determination of the MACT floor for metal coil surface coating took into account the likelihood that the metal coil surface coating survey responses included only "best case" data, which do not reflect degradation in performance over time or normal variations in coil coating operations over extended time periods.

5.3.2.2 Quality of Metal Coil Surface Coating Capture Efficiency Data.

Because of the high capture efficiencies reported in the metal coil coating MACT database, a data validation effort was undertaken to determine the basis of the high capture efficiency claims [8]. The focus of the data validation was to ascertain whether the appropriate EPA reference test methods had been used to verify the reported capture efficiencies. The MACT database included 33 lines operating with permanent total enclosures (PTE) without indication that the enclosure had been properly verified using EPA Method 204 or Procedure T. The MACT database also included 17 lines operating without a PTE and reporting capture efficiency above 95 percent, but did not indicate that the capture efficiency for these lines had been measured in accordance with the latest EPA guidance. A telephone survey [9] of each of the above-referenced lines was conducted to verify the basis for the reported capture efficiency. The results of the data validation can be summarized as follows:

- Of the 33 lines reported to be operating with PTEs, 20 lines had been properly verified as PTEs using either Method 204 or Procedure T. The remaining 13 lines had not been formally tested against the Method 204 criteria.
- Of the 17 lines operating without a PTE, but reporting 95 percent or higher capture efficiency, 8 had not run a capture efficiency test and were relying on an engineering assessment to estimate capture efficiency. Three of the 17 lines were tested by a mass balance procedure that involved using Method 24 to determine coating volatile matter

content and Method 25 to measure VOC emissions and that did not meet EPA precision or test method criteria. The remaining 6 lines conducted an appropriate test (typically a temporary total enclosure procedure).

5.3.3 MACT Floor Determination

For this analysis, EPA determined that all of the 89 facilities in the metal coil surface coating MACT data base were major or synthetic minor facilities with coating lines. Therefore, this set of 89 facilities was used to identify the top performing 12 percent of facilities for coating line control.

5.3.3.1 Floor for Overall Control Efficiency.

The coating line overall control efficiency (OCE) was calculated for all of the facilities with sufficient information in the data base as a facility-wide average, i.e., as an average of all of the coating lines at a facility (that accounts for the effect of averaging across coating lines.) The calculation procedure consisted of calculating an arithmetic average facility capture efficiency (arithmetic average for all application stations or lines, depending on the reported data), an arithmetic average facility destruction efficiency (arithmetic average for all application stations or lines, depending on reported data), and an average facility OCE (product of average facility capture efficiency and average facility destruction efficiency.) Table 5-6 presents the average facility OCE for all facilities in the MACT database with sufficient non-CBI information to calculate the average facility OCE. For facilities listed in the table without an average facility OCE, the reason the OCE was not calculated (no controls, information not available, or CBI) is noted.

As has been described previously, some facilities reported OCE's that could not be substantiated based on the data provided supporting reported capture efficiency. Facilities with unsubstantiated OCE's were not used in the MACT floor determination. Removing facilities with unsubstantiated OCE's from the MACT floor facilities resulted in the removal of six facilities, which were replaced with the next best performing facilities with OCE's substantiated by Method 204 or Procedure T verification of capture efficiency. The resulting top performing 12 percent of the facilities are the 11 facilities identified in Table 5-6 as MACT-floor facilities.

Table 5-6. Metal Coil Surface Coating Average Facility OCE [a]

Facility No.	OCE [b] (%)	Capture (%) [c]	Control Device (%) [c]
1	99.97	100.0	99.97
2	99.96	100.0	99.96
3	99.8	100.0	99.8
4	99.7	100.0	99.7
5	99.7	100.0	99.7
6	99.6	99.8	99.8
7	99.6	*100.0*	99.6
8	99.6	100.0	99.6
9	99.5	*100.0*	99.5
10	99.3	100.0	99.3
11	99.1	*99.4*	99.7
12	99.0	*100.0*	99.0
13	98.97	*99.0*	99.97
14	98.8	99.0	99.8
15	98.5	99.0	99.5
16	98.5	99.4	99.1
17	98.2	100.0	98.2
18	98.0	100.0	98.0
19	98.0	100.0	98.0
20	98.0	*100.0*	97.98
21	97.8	100.0	97.8
22	97.7	99.0	98.7
23	97.2	99.0	98.2
24	97.0	99.0	98.0
25	97.0	99.0	98.0
26	97.0	99.0	98.0

Table 5-6. (Continued)

Facility No.	OCE [b] (%)	Capture (%) [c]	Control Device (%) [c]
27	97.0	97.5	99.5
28	96.9	97.6	99.3
29	96.8	99.9	96.9
30	96.4	*97.2*	99.2
31	96.0	100.0	96.0
32	96.0	*99.99*	96.0
33	95.9	97.4	98.5
34	95.8	97.9	97.9
35	95.7	100.0	95.7
36	95.0	100.0	95.0
37	94.9	*99.9*	95.0
38	94.4	94.5	99.9
39	94.2	*97.5*	96.7
40	94.2	94.2	99.99
41	93.8	100.0	93.8
42	93.4	97.6	95.7
43	93.1	*96.0*	96.97
44	93.0	100.0	93.0
45	92.8	*94.3*	98.4
46	92.6	*97.5*	95.0
47	92.6	95.0	97.5
48	92.2	93.2	98.9
49	91.4	95.2	96.0
50	91.2	97.0	94.0
51	91.0	*100.0*	91.0
52	90.3	95.0	95.0
53	90.2	92.0	98.0

Table 5-6. (Continued)

Facility No.	OCE [b] (%)	Capture (%) [c]	Control Device (%) [c]
54	90.1	95.0	94.8
55	89.3	94.0	95.0
56	88.7	90.0	98.5
57	88.2	*98.0*	90.0
58	85.97	86.4	99.5
59	85.7	*95.2*	90.0
60	85.4	88.0	97.0
61	83.3	90.0	92.5
62	83.3	90.0	92.5
63	82.8	92.0	90.0
64	82.8	90.0	92.0
65	81.8	87.0	94.0
66	79.8	95.0	84.0
67	79.6	94.0	84.7
68	73.6	92.0	80.0
69	66.6	100.0	66.6
70	NC[d]	NC	NC
71	NC	NC	NC
72	NA[e]	95.7	NA
73	NC	NC	NC
74	NC	NC	NC
75	NC	90.0	NC
76	NC	NC	NC
77	NC	90.0	NC
78	NC	NC	NC
79	NA	NA	91.4
80	CBI[f]	CBI	CBI

Table 5-6. (Continued)

Facility No.	OCE [b] (%)	Capture (%) [c]	Control Device (%) [c]
81	NA	NA	NA
82	NA	NA	99.5
83	CBI	CBI	CBI
84	CBI	CBI	CBI
85	CBI	CBI	CBI
86	*CBI*	*CBI*	*CBI*
87	CBI	CBI	CBI
88	CBI	CBI	CBI
89	CBI	CBI	CBI

[a] Includes average facility OCE for all facilities in the MACT database with sufficient non-CBI information to calculate average facility OCE.

[b] Product of average facility capture and control efficiencies as calculated from data reported by facility.

[c] Arithmetic average of data reported by facility if different efficienc es reported for different application stations or lines.

[d] NC = No Control

[e] NA = Not Applicable

[f] CBI = Confidential Business Information

NOTE: Capture efficiencies in italics were unsubstantiated by the data provided. The 11 MACT floor facilities are highlighted.

Table 5-7 presents a summary of the products in which the coil coated by the MACT-floor facilities is used. As shown in Table 5-7, the MACT floor facilities represent a number of industry segments, including, but not limited to; building products, automotive products, office furniture, beverage lids and appliances.

All of the top 12 percent MACT floor facilities use thermal oxidizers and 8 of the facilities are achieving 100 percent capture of application station emissions through the use of permanent total enclosures. Table 5-6 shows that the range of reported OCE for the top 12 percent was 98.2 to 99.97 percent. The reported metal coil surface coating values show that controls on some specific coating operations may be capable of achieving greater than 99 percent HAP destruction based on 100 percent capture and destruction efficiency greater than 99 percent. The average OCE of the MACT floor facilities is 99.4 percent. However, to determine the level of emission control achievable with this technology, it is important to consider not only the level of control reported, but also the previously cited data quality concerns as well as the control

Table 5-7. MACT Floor Facility Products

Facility No.	Products Reported in ICR Response
1	Metal building products
2	Beverage lids
3	CBI
4	Ceiling grids
5	Soffit, flashing, rain carrying products
6	Coil coated products
8	Automotive products - body panels and computer chasses
10	Galvanized steel and aluminum strip
14	Auto ride control components, entry & garage doors, appliances and office furniture
15	Light fixtures, office furniture components, can lids, rainware, closet hardware, roll up panel doors, metal building components, T-bar ceiling systems
17	Lawn sheds

levels that EPA has generally found to be achievable for this type of control technology. This approach ensures that factors that affect control levels, such as variations in source operative conditions and inlet loadings to the control device are accommodated in the selection of the MACT floor.

Because of the previously cited data quality concerns, a 98 percent facility-wide coating line OCE was determined to be the MACT floor for existing sources. This OCE represents the use of permanent total enclosure to achieve 100 percent capture of application station HAP emissions and a thermal oxidizer to achieve a destruction efficiency of 98 percent. Previously cited information from literature sources and vendors supports the determination of a destruction efficiency of 98 percent for thermal incinerators. An OCE of 98 percent is attainable by all of the facilities in the MACT floor considering the available information regarding the capture and control technologies currently used at existing sources in the metal coil surface coating industry.

A 98 percent facility-wide coating line OCE also was determined to be the MACT floor for new sources in the metal coil surface coating industry. No technology was identified that could achieve a better OCE than the use of permanent total enclosure to capture emissions from coating application stations and a thermal oxidizer to destroy HAP emissions from application and the curing oven.

5.3.3.2 Floor for Emission Rate.

The EPA recognizes that some facilities may choose to limit their coating line HAP emissions either through a combination of low-HAP coatings and add-on controls or through the use of waterborne coatings that are pollution preventing. For example, the facilities in the metal coil surface coating MACT survey reporting zero OCE also reported using waterborne coatings. To allow for these situations, data from the metal coil surface coating MACT database were used to calculate an alternative facility emission rate limit. The facility HAP emission rate was calculated based on applying the 98 percent MACT floor OCE to a pre-controlled facility HAP emission rate representative for this industry. The rationale for this is that the facility HAP emission rate should not be more stringent than the controlled HAP emission rate that can be attained by a metal coil coating facility using a representative coating formulation and applying MACT floor control.

The calculation procedure consisted of defining a representative coating for this industry

by calculating the average volume solids coating content for all of the facilities in the MACT database with sufficient coating information and assuming that HAP constitutes the remainder of the coating. As shown in Table 5-8, the average volume solids is 43.5 percent, which when rounded to 40 percent yielded a coating with 40 percent by volume solids and 60 percent by volume HAP. The pre-controlled facility HAP emission rate was calculated as 12.11 pounds of HAP emitted per gallon of solids applied using glycol ethers as the coating HAP for the purpose of the conversion of HAP from volume to mass. Glycol ethers were chosen as the HAP for the coating solvent because glycol ethers may be constituents in solvent-borne or waterborne coatings and represent the second largest quantity of HAP emitted, accounting for 23 percent of the nationwide HAP emissions from the coil coating industry. The pre-controlled facility emission rate was then factored by the 98 percent facility OCE MACT floor to derive the equivalent facility HAP emission rate limit of 0.24 pounds of HAP emitted per gallon of solids applied.

Table 5-8. Metal Coil Surface Coating Facility Average Volume Solids Coating Content [a]

Facility Number	Facility Average Coating Solids by Volume [b] (%)
1	76.4
2	63.0
3	62.8
4	61.9
5	58.3
6	58.3
7	55.5
8	55.0
9	53.0
10	52.0
11	52.0
12	51.0
13	50.4
14	50.0
15	50.0
16	50.0
17	50.0
18	50.0
19	49.4
20	49.4
21	48.9
22	48.7
23	48.0
24	47.7
25	47.5
26	47.0

Table 5-8. (Continued)

Facility Number	Facility Average Coating Solids by Volume [b] (%)
27	46.7
28	46.5
29	46.4
30	46.3
31	46.0
32	46.0
33	46.0
34	46.0
35	46.0
36	45.9
37	45.0
38	45.0
39	45.0
40	44.8
41	44.7
42	44.4
43	44.4
44	42.0
45	41.6
46	41.4
47	41.3
48	41.0
49	40.0
50	40.0
51	39.8
52	38.1
53	38.0

Table 5-8. (Continued)

Facility Number	Facility Average Coating Solids by Volume [b] (%)
54	38.0
55	37.0
56	36.7
57	33.7
58	31.9
59	30.0
60	22.8
61	22.1
62	18.4
63	18.0
64	10.5
65	8.7
66	1.0
Average Volume Percent Solids = 43.5 Emission Rate @ 98% OCE = 0.24 lb HAP Emitted/Gallon Solids Applied	

[a] Lists all facilities in the MACT database with sufficient non-CBI information to calculate average facility volume solids coating content.

[b] Calculated by dividing total gallons of solids applied by total gallons of coatings applied as reported by facility for 1997 multiplied by 100.

5.4 REFERENCES

1. U.S. Environmental Protection Agency. Metal Coil Surface Coatings MACT Docket Number A-97-47 Item Numbers II-D-1 through II-D-113. ICR Responses. Office of Air Quality Planning and Standards. Research Triangle Park, NC. Responses received September 1998-April 1999.

2. Memorandum from Rhea Jones, EPA/OAQPS/ESD/CCPG to Metal Coil Surface Coating Docket. July 29, 1999. Revised draft metal coil surface coating model plants.

3. Environmental Resources Management. Metal Coil Surface Coating ICR Data Analysis and MACT Floor Proposals. St Charles, Missouri. June 2, 1999. p. 9.

4. Reference 3.

5. USEPA. Survey of Control Technologies for Low Concentration Organic Vapor Gas Streams. USEPA, Office of Air Quality Planning and Standards. May 1995. p. 28.

6. Reference 3, p. 10.

7. Memorandum (and attachments) from Farmer, J. R., U.S. Environmental Protection Agency, Research Triangle Park, North Carolina, to distribution. August 22, 1980. Thermal incinerator and flare removal efficiency.

8. Reference 3, p. 8.

9. Reference 8.

6.0 ENVIRONMENTAL AND ENERGY IMPACTS

6.1 INTRODUCTION

Model plants and the criteria used to choose them have been described in Chapter 5. Compliance options have also been described in Chapter 5. The assignment of model plants to facilities in the MACT database for the purpose of estimating impacts is described in Section 7.3 of Chapter 7. This chapter describes the estimated nationwide environmental and energy impacts of applying the compliance options to the model plants.

6.2 ENERGY IMPACT

Energy requirements for implementation of the compliance options for metal coil surface coating plants include electricity to collect and treat ventilation air, electricity for lighting permanent total enclosures, and natural gas to provide supplemental fuel needed for stable operation of oxidizers. Energy use has been estimated for operating a baseline thermal oxidizer system on Model Plant 1, for operating a condenser system on Model Plant 5, and for operating coating rooms (permanent total enclosures) on application stations for Model Plants 1 through 4. Incremental energy use has been estimated for operating upgraded (existing and replacement) oxidizers for Model Plants 1 through 4.

Table 6-1 provides a summary of the increased model plant and nationwide energy requirements associated with implementation of the compliance options. It should be noted that some models show no change from oxidizer baseline to upgrade or replacement. For example, for the upgraded oxidizers, electricity usage doesn't change because the air flow doesn't change.

Table 6-1 Summary of Metal Coil Surface Coating Model and Nationwide Energy Impacts

Model	Number of plants[a]	Model incremental energy usage, kWh/y	Nationwide incremental energy usage, kWh/y	Model incremental natural gas usage, scf/y	Nationwide incremental natural gas usage, scf/y
Baseline					
Model 2, thermal, one oven	1	54,398	54,398	69,627,016	69,627,016
Upgrade of Baseline Unit					
Model 1, catalytic, one oven	1	0	0	44,262	44,262
Model 2, thermal, one oven	1	22	22	0	0
Model 3, catalytic, one oven	1	0	0	7,642,229	7,642,229
Replacement of Baseline Unit					
Model 1, thermal, one oven	1	31,617	31,617	0	0
Model 1, catalytic, one oven	2	31,487	62,974	-1,235,560	-2,471,120
Model 2, thermal, one oven	2	31,885	63,770	0	0
Model 2, thermal, two ovens	1	15,942	15,942	0	0
Model 2, catalytic, one oven	2	31,680	63,361	-609,860	-1,219,721
Model 3, thermal, one oven	1	66,277	66,277	0	0
Model 3, catalytic, one oven	1	66,101	66,101	1,181,496	1,181,496
Model 4, thermal, two ovens	1	46,637	46,637	0	0
Model 5, condenser	4	2,287,708	9,150,832	0	0
Operation of Coating Room					
Small	51	11,200	571,200	0	0
Medium	5	12,250	61,250	0	0
Large	6	12,600	75,600	0	0
Nationwide Total for Model Plants			10,329,981		78,412,175
Nationwide Total for All Plants[b]			14,575,603		110,605,249

[a] Number of model plants assigned to the 64 facilities in the MACT database with sufficient information to calculate the facility OCE and HAP emission rate to estimate the incremental energy requirement of achieving the MACT floor compliance options.

[b] Nationwide totals for all plants in metal coil surface coating industry are based on the ratio of HAP emissions reported by plants that are represented by model plants to the HAP emissions reported by all plants in the MACT database. The ratio is 1.411.

For natural gas usage, supplemental gas may be required for flame stabilization, however, in some cases the quantity of gas required for stable operation is the same for baseline as for upgrade or replacement models. For some of the catalytic model plant replacements, gas usage decreases because the heat recovery is changed to 70 percent from 50 percent.

6.3 AIR POLLUTION IMPACT

The major air pollution impact of implementing the compliance options is reduced emissions of HAP to the atmosphere. The emission control systems used to reduce HAP emissions also reduce non-HAP volatile organic compound (VOC) emissions to the atmosphere. Since the MACT database does not contain information on VOC emissions, the reduction of VOC emissions cannot be quantified, however, the percent reduction should be similar to the percent reduction in HAP emissions. There will also be minor impacts associated with the production and use of electricity required for fans and for lighting in coating rooms. Electric utility generation will result in small increases in sulfur dioxide and carbon dioxide emissions from fossil-fuel powered generation plants.

The metal coil surface coating MACT database was used to estimate the reduction of HAP emissions to the atmosphere resulting from implementing the compliance options. The MACT database contains sufficient information from 64 facilities to calculate a facility OCE and facility emission rate. Of this set of facilities with complete information, 10 facilities report being permitted under Title V as synthetic minor or as non-major sources. Of the 54 major facilities, based on adjusted facility OCE (see Section 5.3.2 of this document for a description of data quality issues related to reported capture and destruction efficiencies and Reference 1 for a description of adjustments to the capture and destruction efficiencies) and average facility emission rates, 26 are in compliance with either the facility OCE or the emission rate limit. The remaining 28 facilities will be required to take measures to reduce HAP emissions either through coatings reformulation or improved emission control systems. Because more than 85 percent of the facilities in the MACT database already have emission controls in place, the EPA assumes facilities required to reduce HAP emissions will do so either by upgrading existing controls or by installing controls if emissions are currently uncontrolled.

The EPA examined the average facility emission rate and the adjusted facility OCE for each of the 28 facilities that would need to reduce HAP emissions to meet the standard and

determined the least costly measure needed to reach compliance. For example if a facility reported a 98 percent efficient thermal oxidizer but less than 100 percent capture efficiency, EPA assumed the facility will need to install coating rooms on application stations to meet the 98 percent facility OCE. For each facility needing to reduce HAP emissions, estimates were made of the HAP emitted at the current facility OCE and of the HAP emitted after upgrade or installation of the emission control system to attain one of the compliance options. Estimates of HAP emitted at the current facility OCE were based on the total pounds of HAP applied in coatings as reported by the facility for 1997 factored by the adjusted facility OCE. Estimates of the HAP emitted after upgrade or installation of the emission control system were based on the total pounds of HAP applied in coatings as reported by the facility for 1997 factored by the upgraded facility OCE to comply with one of the MACT compliance options.

The 64 facilities in the metal coil surface coating MACT database which served as the basis for the detailed impacts analysis emitted a total of 1761 tons of HAP in 1997. For the 28 of these 64 facilities required to take measures to reduce HAP emissions, the total HAP emission reduction was estimated to be 968 tons, or a percentage reduction of almost 55 percent. The total nationwide HAP emissions reported by all 89 facilities in the database, including the 25 facilities for which insufficient information was available to determine if HAP emission reductions would be needed to meet the standard, were 2484 tons of HAP in 1997. Applying the HAP emission reduction of 55 percent for the 64 facilities with sufficient information to determine emission reductions to the total nationwide HAP emissions reported in 1997 yields an estimated total nationwide HAP emission reduction of approximately 1366 tons per year.

6.4 WATER IMPACTS

Nationwide water impacts resulting from implementation of the compliance options are insignificant. Four facilities using waterborne coatings are each assumed to apply a condenser system to comply with the emission rate limit. This will result in the generation of wastewater streams that will require treatment to remove the HAP. However, if the facilities are able to reduce HAP usage in coatings to comply with the emission rate limit, then there will be no associated water impacts.

6.5 SOLID WASTE IMPACTS

The impact of the compliance options on solid waste will be negligible. Facilities using catalytic incinerators to comply with the emission rate limit or the facility OCE probably will be required to install larger volumes of catalysts and to replace catalysts more frequently than current replacement cycles to maintain high performance levels, resulting in a small increase in solid waste generation.

6.6 REFERENCES

1. Environmental Resources Management. Metal Coil Surface Coating ICR Data Analysis and MACT Floor Proposals. St Charles, Missouri. June 2, 1999. Table 5.

7.0 COSTS

7.1 INTRODUCTION

Model plants and the criteria used to choose them have been described in Chapter 5. Compliance options have also been described in Chapter 5. This chapter describes the estimated costs of applying the compliance options to the model plants.

7.2 MODEL PLANT COMPLIANCE COSTS

Model plant specifications used in estimating compliance costs are summarized in Table 7-1. All existing plants applying solvent-borne coatings have HAP emission control systems in place. Therefore, for existing plants applying solvent-borne coatings as represented by Model Plants 1 through 4, compliance is based on upgrading or replacing HAP emission controls. Emission control systems needed to comply include coating rooms (permanent total enclosures) to capture fugitive HAP emissions from coating application stations and oxidizers with 98 percent destruction efficiency.

Some existing plants applying waterborne coatings that currently operate without HAP emission control systems will need either to reformulate coatings or to add emission control systems to comply with either the emission rate limit or the compliant coating limit. Model Plant 5 represents a facility applying waterborne coatings. To estimate compliance costs, it is assumed that a plant applying waterborne coatings that are not compliant will install a condenser system to meet the emission rate limit. All but one facility in the MACT database that reports using only waterborne coatings will need much less than a 90 percent overall control efficiency to comply with the emission rate limit. Because of the relatively low overall control efficiency required and the low organic solvent concentrations in the oven exhausts, a condenser was chosen as the HAP emission control device to apply to the waterborne coatings model plant.

Table 7-1. Model Plant Specifications Used for Compliance Costing

Model Plant	1	2	3	4	5
Annual operating time (hr)	4270	5300	7700	7700	2660
Annual coating time [a] (hr)	2990	3710	5390	5390	1860
Solids applied annually (gal)	13,700	79,500	129,000	293,000	40,300
Coating formulation [b] :					
Weight percent HAP	35	40	41	13	3.5
Weight percent solids	41	35	49	59	49
Ovens [c] :					
Number	1	1	2	2	1
Maximum solvent concentration (% LEL)	25	25	25	25	NA
Solvent capacity (gal/hr)	56	51	88	98	1.4 [d]
Air flow (ACFM)	9333	8500	14,700	16,300	6650
Exhaust temperature (°F)	410	515	710	470	295

NA = Not applicable, HAP = hazardous air pollutant, LEL = lower explosive limit.

[a] Annual coating time is estimated to be 70 percent of annual operating hours.
[b] Model plants 1 through 4 are applying solvent-borne coating; model plant 5 is applying waterborne coating.
[c] Parameters are given on a per oven basis.
[d] Also 14 gallons of water per hour.

7.2.1 Permanent Total Enclosure Costs

Table 7-2 presents a summary of permanent total enclosure (PTE) costs. As shown in Table 7-2, PTEs are costed in three sizes: 8,000 ft^3; 13,000 ft^3; and 18,000 ft^3. Floor areas for the three enclosures are taken as 800 ft^2, 875 ft^2, and 900 ft^2, respectively, based on typical coating application station sizes for the model plants. To estimate compliance costs for a coating line needing to upgrade capture efficiency, the costs of a small PTE are applied to Model Plants 1 and 2, the costs of a medium PTE to Model Plant 3, and the costs of a large PTE to Model Plant 4. Facilities represented by Model Plant 5 will not need to upgrade capture efficiency to comply with the emission rate limit.

Each PTE is assumed to have two swing doors and four windows. Costing on a square-foot basis plus doors and windows, is taken from Reference 1. The structure is assumed to be constructed of steel. Auxiliary costs that contribute to the purchased equipment cost (PEC) are assumed to add 50 percent to the purchase price. Total capital investment (TCI) is taken as 1.6 times the PEC. Annual costs are charged for maintenance ($6/$ft^2$ y) and electricity for lighting (14 kWh/ft^2 y). Indirect annual costs are based on typical values in the OAQPS Control Cost Manual [2] (Manual) , i.e., 60 percent labor and materials overhead, other indirect costs of 4 percent of TCI, and capital recovery based on 7 percent interest and a 15-year life for the enclosure.

In estimating the costs of a PTE, it has been assumed that existing process exhaust airflow will be adequate to satisfy the EPA Method 204 criteria and to provide for worker safety and comfort. This assumption is based on experience cited by several engineering contractors [3,4,5] that install PTEs. For example, Pacific Environmental Services reported that of more than 100 PTE designs completed, none has required an increase in the size of the air pollution control device in order to maintain worker comfort.

Table 7-2. Summary of Coating Room Costs

Model	Small (8,000 ft^3)	Medium (13,000 ft^3)	Large (18,000 ft^3)
Floor area, ft^2	800	875	900
Cost/ft^2, $	15	18	20
Cost, $	12,000	15,313	18,000
Swing doors (2), $	5,000	5,000	5,000
Windows (4), $	800	800	800
Sum, $	17,800	21,113	23,800
Auxiliaries (at 50 %), $	8,900	10,556	11,900
Purchased equipment cost (PEC), $	26,700	31,669	35,700
Total capital investment (TCI, 1.6 x PEC), $	42,720	50,670	57,120
Maintenance (6$/$ft^2$ y), $/y	4,800	5,250	5,400
Maintenance supervision (15 % of maintenance), $/y	720	788	810
Materials (50 % of maintenance labor), $/y	2,400	2,625	2,700
Electricity (lighting, 14 kWh/ft^2 y and $.06/kWh), $/y	672	735	756
Direct costs, $/y	8,592	9,398	9,666
Labor/materials overhead (60 % of labor and materials), $/y	4,752	5,198	5,346
Other indirect costs (4 % of TCI), $/y	1,709	2,027	2,285
Capital recovery (7 % interest rate, 15-year life), $/y	4,691	5,564	6,272
Indirect costs, $/y	11,151	12,788	13,903
Total annual costs, TAC, $/y	19,743	22,186	23,569

Note: Costs for enclosure, doors, and windows based on cost factors presented in Reference 1.

7.2.2 Oxidizer Costs

For each model plant representing a coating line that applies solvent-borne coatings, costs are estimated for upgrading an existing thermal or catalytic oxidizer and for replacing an existing thermal or catalytic oxidizer. Most of the facilities in the MACT database that will need to reduce HAP emissions to comply with the standard will need to replace existing oxidizers within the next 4 years as the oxidizers reach the end of their useful life. Table 7-3 presents a summary of the oxidizer upgrade costs; Table 7-4 presents a summary of the oxidizer replacement costs. The costs are estimated based on the Manual. Costs estimated from the Manual are expected to be within about 30 percent of the cost a buyer might pay for the equipment being costed. However, much larger deviations can be found if the input parameters for the model differ from values found in practice.

To estimate incremental costs of upgrading or replacing existing HAP emission controls, costs of baseline controls are subtracted from the costs of upgraded or replacement units. Costs are estimated and are summarized in Tables 7-3 and 7-4 in three areas: TCI, total annual cost (TAC), and operation and maintenance costs (O&M). The TCI includes purchased equipment costs (incinerator and auxiliary equipment, instrumentation, sales tax, and freight), direct installation costs (foundation and supports, handling and erection, electrical, piping, insulation for duct work, and painting where not included in auxiliary costs), and indirect installation costs (engineering, construction or field expenses, contractor fees, start-up, performance test, and contingencies). The TAC includes indirect annual costs (overhead, administrative charges, property taxes, insurance, and capital recovery) and direct annual costs (O&M). The O&M costs are made up of electricity, natural gas, operating labor, and maintenance labor and materials.

The Manual is designed so that the user supplies information for a variety of model parameters. For oxidizers, some of these parameters are gas flow rate, gas temperatures at the inlet and outlet, HAP concentration, heats of combustion and heat capacities for the HAPs, and amount of heat recovery for oxidizers so equipped. Some of the model parameters come directly from the model plants, e.g., values for gas flow, temperature, annual hours of operation, and quantity of solvent are consistent with each of the model plants. For other model parameters, assumptions are required, as are explained in the following paragraphs.

Table 7-3 Summary of Oxidizer Upgrade Costs for Coil Coating Solvent-Borne Model Plants

Model	Total capital investment, $	Total annual cost, $/y	O&M cost, $/y	Capital cost above baseline, $	Annual cost above baseline, $/y	O&M cost above baseline, $/y
Baseline						
Model 1, one oven	372,049	336,574	271,981			
Model 1, two ovens	562,893	387,908	286,445			
Model 1, catalytic, one oven	373,400	143,713	66,799			
Model 1, catalytic, two ovens	456,389	191,486	81,448			
Model 2, one oven	352,970	340,994	277,123			
Model 2, two ovens	534,186	396,197	295,450			
Model 2, catalytic, one oven	331,943	136,371	63,987			
Model 2, catalytic, two ovens	405,987	187,478	82,315			
Model 3, one oven	386,379	640,456	566,600			
Model 3, two ovens	584,747	704,445	593,227			
Model 3, catalytic, one oven	405,690	186,176	96,974			
Model 3, catalytic, two ovens	496,184	253,549	123,601			
Model 4, 1 oven	420,902	866,022	786,995			
Model 4, 2 ovens	636,994	927,808	813,622			

Assumptions: Baseline units are thermal oxidizers operating at 1,350°F or catalytic oxidizers operating at 1,000°F.
Efficiency is 95 percent (thermal) or 94 percent (catalytic). Heat recovery is 50 % and retrofit factor is 1.2.

Upgrade of Baseline Unit						
Model 1, one oven	434,716	365,369	284,118	62,667	28,795	12,137
Model 1, two ovens	657,900	441,446	311,002	95,007	53,538	24,557
Model 1, catalytic, one oven	436,268	187,975	92,331	62,868	44,262	25,533
Model 1, catalytic, two ovens	533,583	258,511	119,215	77,194	67,025	37,766
Model 2, one oven	412,481	373,995	292,185	59,511	33,001	15,062
Model 2, two ovens	624,250	457,760	325,553	90,064	61,563	30,102
Model 2, catalytic, one oven	387,831	184,254	92,507	55,888	47,883	28,520
Model 2, catalytic, two ovens	474,342	261,995	125,875	68,355	74,516	43,561
Model 3, one oven	451,291	685,172	588,482	64,913	44,717	21,882
Model 3, two ovens	682,986	788,592	636,960	98,239	84,148	43,733
Model 3, catalytic, one oven	473,995	261,521	146,885	68,305	75,345	49,911
Model 3, catalytic, two ovens	579,726	366,227	195,363	83,541	112,678	71,762
Model 4, one oven	491,726	911,646	808,898	70,825	45,624	21,904
Model 4, two ovens	744,180	1,013,429	857,376	107,186	85,621	43,755

Assumptions. Units operate at 1,600°F (thermal) or 1,200°F (catalytic), have 50 % heat recovery and have a retrofit factor of 1.4
Efficiency is 98 percent for all oxidizers, which requires 1.5 x operating labor cost and double the maintenance of existing units.

Baseline and Upgrade Assumptions· Costs exclude ductwork, dampers, fan, motor, and stack.
Two oxidizers purchased at the same time receive a 20 percent discount; annual cost is reduced by 5 percent.
All costs are in 1997 $.

Table 7-4 Summary of Oxidizer Replacement Costs for Coil Coating Solvent-Borne Model Plants

Model	Total capital investment, $	Total annual cost, $/y	O&M cost, $/y	Capital cost above baseline, $	Annual cost above baseline, $/y	O&M cost above baseline, $/y
Baseline						
Model 1, one oven	372,049	336,574	271,981			
Model 1, two ovens	562,893	387,908	286,445			
Model 1, catalytic, one oven	373,400	143,713	66,799			
Model 1, catalytic, two ovens	456,389	191,486	81,448			
Model 2, one oven	352,970	340,994	277,123			
Model 2, two ovens	534,186	396,197	295,450			
Model 2, catalytic, one oven	331,943	136,371	63,987			
Model 2, catalytic, two ovens	405,987	187,478	82,315			
Model 3, one oven	386,379	640,456	566,600			
Model 3, two ovens	584,747	704,445	593,227			
Model 3, catalytic, one oven	405,690	186,176	96,974			
Model 3, catalytic, two ovens	496,184	253,549	123,601			
Model 4, 1 oven	420,902	866,022	786,995			
Model 4, 2 ovens	636,994	927,808	813,622			

Assumptions: Baseline units are thermal oxidizers operating at 1,350°F or catalytic oxidizers operating at 1,000°F.
Efficiency is 95 percent (thermal) or 94 percent (catalytic). Heat recovery is 50 % and retrofit factor is 1.2.

Replacement of Baseline Unit						
Model 1, one oven	542,301	383,362	285,996	170,252	46,789	14,014
Model 1, two ovens	820,835	469,718	312,879	257,941	81,810	26,434
Model 1, catalytic, one oven	496,209	184,749	76,267	122,809	41,037	9,468
Model 1, catalytic, two ovens	608,916	261,530	103,150	152,527	70,044	21,702
Model 2, one oven	514,644	391,190	294,076	161,673	50,196	16,953
Model 2, two ovens	778,971	484,713	327,444	244,785	88,515	31,994
Model 2, catalytic, one oven	441,674	182,189	78,688	109,731	45,818	14,701
Model 2, catalytic, two ovens	541,995	265,662	112,056	136,008	78,184	29,742
Model 3, one oven	563,144	705,873	592,427	176,766	65,418	25,828
Model 3, two ovens	852,383	819,929	640,905	267,636	115,485	47,678
Model 3, catalytic, one oven	539,119	255,512	127,129	133,428	69,336	30,155
Model 3, catalytic, two ovens	661,573	366,932	175,607	165,388	113,383	52,006
Model 4, one oven	613,400	935,416	814,442	192,498	69,394	27,447
Model 4, two ovens	928,450	1,048,738	862,920	291,456	120,930	49,298

Assumptions: Units operate at 1,600°F (thermal) or 1,200°F (catalytic), have 70 % heat recovery and have a retrofit factor if 1.4.
Efficiency is 98 percent for all oxidizers, which requires 1.5 x operating labor cost and double the maintenance of existing units
Baseline and Replacement Assumptions: Costs exclude ductwork, dampers, fan, moter, and stack.
Two oxidizers purchased at the same time receive a 20 percent discount; annual cost is reduced by 5 percent.
All costs are in 1997 $.

Solvents assumed to be in the oxidizer inlet are approximately 60 percent methyl ethyl ketone (MEK) and 40 percent ethylene glycol monoethyl ether (EGME). This allocation is based on the nationwide distribution of HAP emissions from coil coating operations by HAP derived from the ICR database which shows MEK accounted for 30 percent and glycol ethers for 23 percent of nationwide HAP emissions in 1997. Heats of combustion for the two compounds are taken as 2,897 Btu/scf for MEK and 2,986 Btu/scf for EGME. Auxiliary fuel is assumed to be natural gas with a heat of combustion of 21,502 Btu/lb.

For baseline model plants, oxidizer efficiency is assumed to be 95 percent for thermal units and 94 percent for catalytic units. Outlet temperatures are assumed to be 1,350 °F and 1,000 °F for the thermal and catalytic units, respectively. Heat recovery is assumed to be 50 percent. Retrofit costs are assumed to add 20 percent to the TCI.

Costs for upgraded oxidizers are based on an efficiency of 98 percent for all units. Outlet temperatures are assumed to be 1,600 °F and 1,200 °F for thermal and catalytic units, respectively. Heat recovery is assumed to be 50 percent, consistent with the assumed heat recovery for baseline units. Retrofit costs are assumed to add 40 percent to the TCI, and the need for operating and maintaining the oxidizer system at constant high efficiency is assume to require an additional 50 percent in operating and maintenance labor and maintenance materials.

Costs for replacement oxidizers are based on an efficiency of 98 percent for all units. Outlet temperatures are assumed to be 1,600 °F and 1,200 °F for thermal and catalytic units, respectively. Heat recovery is assumed to be 70 percent. Retrofit costs are assumed to add 40 percent to the TCI and the need for operating and maintaining the oxidizer system at constant high efficiency is assumed to require an additional 50 percent in operating and maintenance labor and maintenance materials.

For all cases representing the upgrade or replacement of an existing control system, costs exclude ductwork, butterfly dampers, fans, motors, and stacks. One model (Model 2) needed to represent the installation of a control system in a facility with no existing controls is costed with these auxiliaries using Chapter 10 of the Manual for ductwork, dampers, and stack. Information in Chapter 4.12 of the Handbook - Control Technologies for Hazardous Air Pollutants [6] is used for costing fans and motors and also for sizing ductwork. Ductwork is assumed to be cold-rolled, spiral-wound steel with three inches of insulation. For plants having two oxidizers, both are

assumed to be purchased at the same time and at a discount of 20 percent. Labor costs are derived from tables provided by the Bureau of Labor Statistics at its Internet website. All costs are in 1997 dollars.

The Manual provides equipment sizing equations based on simplifying assumptions. The equations can be altered if the underlying assumptions are changed. One such change is the assumed system heat loss. Because the waste-gas streams entering the oxidizers are at relatively high temperatures, heat losses are assumed to be from 35 to 55 percent, depending on inlet temperature assigned to the model plant being costed. For cases in which the model predicts auxiliary gas consumption to be less than five percent of total gas, additional auxiliary gas is provided for flame stabilization.

7.2.3 Condenser Costs

To represent measures that a plant using waterborne coatings could take to comply with the emission rate limit, a condenser is costed as the control device for Model Plant 5. Table 7-5 presents the estimated condenser costs. Information from Chapter 8 of the Manual [7] is used to develop the condenser costs. Assumptions include purchase of a packaged system installed with 25 feet of duct, ethylene glycol as the refrigerant and an efficiency of 62 percent based on EGME. Auxiliaries are estimated as described above for Model Plant 2 for ductwork, dampers, fans, and motors. A retrofit factor of 1.2 is assumed.

Table 7-5. Condenser Costs for Coil Coating Waterborne Model Plant

Costing for condenser system with auxiliaries	
Total capital investment, TCI, $	779,518
Total annual cost, TAC, $/y	259,571
O&M cost, $/y	137,262

Assumptions: Packaged condenser system installed with 25 ft of duct, fan, motor, damper.
No credit taken for recovered materials. No precooler. Ethylene glycol/water refrigerant.
Efficiency of 62 percent based on ethylene glycol monoethyl ether. Retrofit factor of 1.2, 1997 dollars.

7.3 NATIONWIDE COMPLIANCE COSTS

The metal coil surface coating MACT database contains sufficient information from 64 facilities to calculate a facility OCE and facility emission rate. Of this set of facilities with complete information, 10 facilities report being permitted under Title V as synthetic minor or as non-major sources. Of the 54 major facilities, based on adjusted facility OCE (see Section 5.3.2 of this document for a description of data quality issues related to reported capture and destruction efficiencies and Reference 8 for a description of adjustments to the capture and destruction efficiencies) and average facility emission rates reported for 1997, 26 are in compliance with either the facility OCE or the emission rate limit. The remaining 28 facilities will be required to take measures to reduce HAP emissions either through coatings reformulation or improved emission control systems. Because more than 85 percent of the facilities in the MACT database already have emission controls in place, the EPA assumes facilities required to reduce HAP emissions to comply with one of the compliance options will do so either by upgrading existing controls or by installing controls if emissions are currently uncontrolled. The EPA examined the average facility emission rate and the adjusted facility OCE for each of the 28 facilities currently not attaining any one of the compliance options to determine the least costly measure needed to reach compliance, e.g., a facility with a 98 percent efficient thermal oxidizer but less than 100 percent capture efficiency will need to install coating rooms on application stations to meet the 98 percent facility OCE. For a facility with an existing oxidizer needing increased destruction efficiency to comply, two options for increasing destruction efficiency have been costed, i.e., an oxidizer upgrade or an oxidizer replacement.

The cost that is assigned to a specific facility in the MACT database depends on the age of the existing oxidizer to be upgraded. The EPA assumes the life of an oxidizer is 15 years, therefore, an oxidizer for which increased destruction efficiency is needed and that will be greater than 15 years old by the expected compliance date of 2004 is assumed to be replaced by a more efficient oxidizer. If the oxidizer will be less that 15 years old, the existing oxidizer is assumed to be upgraded. It should be noted that 75 percent of the oxidizers identified as being replaced will be over 20 years old in 2004. In the case of an upgrade or a replacement, an incremental cost is incurred as has been explained in Section 7.2.2 of this Chapter.

Five facilities that are currently using waterborne coatings to comply with State and

Federal VOC emission limits but will need to reduce HAP emissions to comply with the MACT standard will incur the cost of installing a complete emission control system. Because of the relatively low emission rates of four of these facilities, they will be able to comply with the facility emission rate limit without capturing fugitive emissions from the coating application station.

Table 7-6 presents a summary of metal coil surface coating model and nationwide compliance costs. The nationwide compliance costs for model plants are calculated based on the total number of small, medium and large coating rooms needed to upgrade capture efficiency, the total number of oxidizer upgrades and replacements needed for each model plant assigned to represent a facility, and the number of new emission control systems needed for facilities that are currently uncontrolled. For the 28 facilities in the MACT database to which model plants are assigned, the total capital investment is $8,255,683 and the total annual cost associated with the emission control systems is $3,456,213 per year in 1997 dollars. In addition, for all 89 facilities in the MACT database, the estimated annual cost for monitoring, reporting, and recordkeeping totals $1,019,039.

The 64 facilities in the metal coil surface coating MACT database which served as the basis for the detailed emission control system cost calculations emitted a total of 1761 tons of HAP in 1997. The total nationwide HAP emissions reported by all 89 facilities in the database were 2484 tons of HAP in 1997. To estimate the total compliance costs for all metal coil surface coating facilities, the emission control system costs for the facilities represented by the model plants were factored by the ratio of HAP emissions reported by all facilities in the database to HAP emissions reported by the facilities represented by model plants (i.e., 2484/1761 = 1.411) and the estimated annual costs for monitoring, reporting, and recordkeeping were added to the total annual costs associated with the emission control systems. Therefore, the estimated nationwide total capital investment is $11,648,769 and the nationwide total annual cost is $5,895,756 per year in 1997 dollars.

Table 7-6 Summary of Metal Coil Surface Coating Model and Nationwide Compliance Costs [a]

Model	Number of plants [b]	Model total capital investment [c], $	Nationwide total capital investment, $	Model total annual cost [c], $/yr	Nationwide total annual cost, $/yr
Baseline					
Model 2, thermal, one oven [d, e]	1	367,024	367,024	340,994	340,994
Upgrade of Baseline Unit					
Model 1, catalytic, one oven	1	62,868	62,868	44,262	44,262
Model 2, thermal, one oven	1	59,511	59,511	33,001	33,001
Model 3, catalytic, one oven	1	68,305	68,305	75,345	75,345
Replacement of Baseline Unit					
Model 1, thermal, one oven	1	170,252	170,252	46,789	46,789
Model 1, catalytic, one oven	2	122,809	245,618	41,037	82,074
Model 2, thermal, one oven	2	161,673	323,346	50,196	100,392
Model 2, thermal, two ovens	1	244,785	244,785	88,515	88,515
Model 2, catalytic, one oven	2	109,731	219,462	45,818	91,636
Model 3, thermal, one oven	1	176,766	176,766	65,418	65,418
Model 3, catalytic, one oven	1	133,428	133,428	69,336	69,336
Model 4, thermal, two ovens	1	291,456	291,456	120,930	120,930
Model 5, condenser [e]	4	779,518	3,118,072	259,571	1,038,284
Installation of Coating Room					
Small	51	42,720	2,178,720	19,743	1,006,893
Medium	5	50,670	253,350	22,186	110,930
Large	6	57,120	342,720	23,569	141,414
Total Cost for Model Plants			8,255,683		3,456,213
MRR costs [f]					1,019,039
Nationwide Total Cost for All Plants [g]			11,648,769		5,895,756

[a] All costs are in 1997 $.

[b] Number of model plants assigned to the 64 facilities in the MACT database with sufficient information to calculate the facility OCE and HAP emission rate to estimate the compliance cost of achieving the MACT floor compliance options.

[c] From coating room costs in Table 7-2 and control device costs in Tables 7-3 through 7-5. Note that the upgrade and replacement costs represent incremental costs above the costs of the baseline unit.

[d] One facility reporting the use of waterborne coatings requires a 90 percent HAP emission reduction to meet the emission rate limit and consequently was assigned a 95-percent efficient emission control system consisting of a 95-percent efficient thermal oxidizer and a coating room.

[e] Model plant costs represent the costs of a new emission control system, including ductwork, butterfly dampers, fans, motors, and stacks.

[f] For all 89 facilities in MACT database, includes initial one-time costs (acquiring and installing MRR systems, initial control system performance tests, developing startup, shutdown, malfunction plan, initial notifications, performance test report) annualized over 15 years at 7 percent interest and annual costs (compliance determinations, compliance reports and recordkeeping).

[g] Nationwide totals for all plants in metal coil surface coating industry are based on factoring the total costs for model plants by the ratio of HAP emissions reported by plants that are represented by model plants to the HAP emissions reported by all plants in the MACT database (the ratio is 1.411) and adding MRR costs to the nationwide total annual costs

7.4 REFERENCES

1. Lukey, Michael E., P.E. Permanent Total Enclosures Needed in Response to Subpart KK and Changes in Test Procedures. Paper No. 97-TA4B.05, presented at the Air and Waste Management Association Annual Meeting & Exhibition. Toronto, Ontario, Canada. June 1997. Table 2.

2. U. S. Environmental Protection Agency. OAQPS Control Cost Manual, Fourth Edition. EPA-450/3-90-006. January 1990. Pages 3-1 thru 3-66.

3. Reference 1, page 3 of 4.

4. Turner, Thomas K. Local Capture or Total Enclosure? The Answer is Yes! Paper No. 94-RA111.01, presented at the Air and Waste Management Association Annual Meeting & Exhibition. Cincinnati, OH. June 1994.

5. Bemi, Dan. "Demonstrating VOC Capture Efficiency Using Permanent Total Enclosure Technology: Common Practices, Challenges and Rewards." Paper No. 97-TA4B.04, presented at the Air and Waste Management Association Annual Meeting & Exhibition. Toronto, Ontario, Canada. June 1997.

6. U.S. Environmental Protection Agency. Control Technologies for Hazardous Air Pollutants. EPA/625/6-91/014. Office of Research and Development. Washington, DC. June 1991. Pages 4-98 thru 4-101.

7. Reference 2, pages 8-1 thru 8-50.

8. Environmental Resources Management. Metal Coil Surface Coating ICR Data Analysis and MACT Floor Proposals. St Charles, Missouri. June 2, 1999. Table 5.

9. Part A of the Supporting Statement for the Information Collection Request under the Paperwork Reduction Act of 1995. Prepared by the US EPA for the OMB. April 2000. Table 2C.

8.0 ECONOMIC IMPACT ANALYSIS

8.1 INTRODUCTION

This chapter presents information from the economic impact analysis (EIA) developed by the EPA's Innovative Strategies and Economics Group (ISEG) to support the evaluation of impacts associated with regulatory options considered for this NESHAP.

The remainder of this report provides a summary profile of the metal coil coating industry (Section 8.2), an overview of the economic impacts associated with this regulatory action (Section 8.3), and a discussion of small business impacts (Section 8.4).

8.2 INDUSTRY PROFILE

8.2.1 Coatings

There are a wide variety of coatings applied to metal coils. These include polyesters, acrylics, fluorocarbons, alkyds, vinyls, epoxies, pastisols, and organosols. The majority of the coatings (85 percent) are organic solvent based and the remaining 15 percent are waterborne type [1]. High-solid coatings currently have limited use because of applicability and availability of suitable formulations. The six largest coatings suppliers are Akzo, Dexter, Lilly, Morton, PPG, and Valspar; which combined provide 85 percent of coatings [2].

8.2.2 Costs of Production

The types of metal processed by the coil coating industry include cold-rolled steel, galvanized steel, and aluminum [1]. For 1998, as shown in Table 8-1, Purchasing Online reported spot prices for cold-rolled steel sheet at $420 per ton, HD galvanized steel sheet $590 per ton, and aluminum common alloy sheet at $1.05 per pound. However, the price of steel has dropped

significantly during the past year. For April 1999, Purchasing Online reported spot prices for cold-rolled steel sheet at $360 per ton, HD galvanized steel sheet $410 per ton.

During 1997, as shown in Table 8-2, the coatings industry provided coil coating companies with 39.2 million gallons of coating at a value of $611.7 million, or an average $15.60 per gallon. However, some specialty coatings sell for more than $50 per gallon [2, 3].

Table 8-1. Spot Prices for Steel and Aluminum Sheet: 1998-1999

Year	1999	1998
Cold-rolled steel sheet (Midwest, $/ton)	$360	$420
HD galvanized steel sheet (Midwest, $/ton)	$410	$590
Aluminum (common alloy sheet 3003, $/lb)	$0.94	$1.05

Source: Purchasing Online. 1999. "Hotlines."

Table 8-2. Volume and Value of Coatings Applied to Coat Metal Coils: 1996-1997

Year	Volume (10^6 gallons)	Value ($\$10^6$)	Price $/gallon
1997	39.2	$611.7	$15.60
1996	30.0	$550.0	$18.33
Total/Average	69.2	$1,161.7	$16.79

Source: References 2 and 3.

8.2.3 Uses, Consumers, and Substitutes

One of the earliest applications for metal coil coatings was the in the production of Venetian blinds [4]. During the 1970's, environmental and work safety regulations led many companies to explore prepainting applications and this generated interest in coil coating applications in a variety of industries. Currently, coil coated products are used in building and construction, business and consumer, transportation, package, and other goods. As shown in Figure 8-1, building and construction products accounted for more than 60 percent of coil consumption in 1997. Uses in this segment include residential siding, roofing, trim, gutters, metal

doors, mobile homes, and modular housing. Business and consumer products (i.e., appliances and furniture) accounted for 17.4 percent, followed by transportation (8.8 percent), packaging (4.9 percent), and other (9.3 percent).

Coil coating competes with other methods of producing finished coated sheet metal, mostly post-fabrication methods such as spraying, dipping, and brushing. Currently, one coil coating company estimates that roughly 10 percent of coated sheet metal is currently being coil coated [5]. All coated steel competes directly with wood products in building and construction applications such as roofing. The relative price of lumber has risen over the past several years making steel coated products more attractive [6].

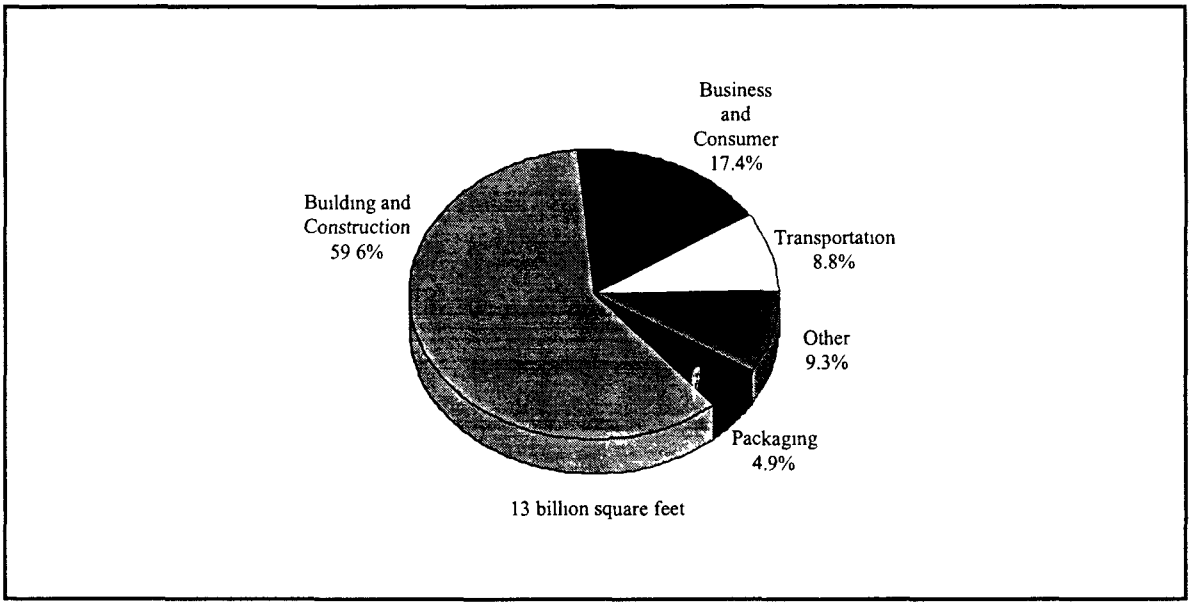

Figure 8-1. Distribution of Coated Metal Coil Shipments by Market: 1997

8.2.4 Affected Producers

Based on non-CBI facility responses to the Section 114 letters [7], the Agency identified 49 companies that owned 82 potentially affected metal coil coating facilities. The following section describes types of manufacturing facilities, identifies the companies that own them, and presents recent trends in products and processes.

8.2.4.1 Manufacturing Facilities.

Metal coil manufacturers can be classified as one of two types of producers: toll coaters and captive coaters. Toll coaters process coils provided by steel or aluminum mills or their customers, who in turn, fabricate the coated coil into end products. For example, Materials Sciences Corporation has a tolling agreement with AK Steel Corporation whereby it agrees to provide coil coating services to its steel plants in Ohio [5]. These coaters are providing a service rather than fabricating an end product and charge a fee based on weight or surface area. Captive producers' coating operations are part of a vertical operation that both coat and fabricate end products. Some coil coaters perform both types of these functions.

Based on responses to the Section 114 letters, Table 8-3 provides a summary of the descriptive statistics for coil coating facilities by producer type, as available in the MACT database. As shown, toll and captive only facilities account for roughly 78 percent of the reporting facilities with facilities performing both functions accounting for the remaining 22 percent. Coil coating lines are distributed similarly across producer types with the average by group and overall being roughly 1.5 coating lines per facility. Furthermore, captive only facilities are larger in terms of average number of employees because of the additional production process related to final products co-located at the site. Alternatively, toll only facilities have a larger average number of employees devoted to their coating line both in absolute magnitude and relative to facility employment. This is consistent with the fact that their primary function is providing coil coating services.

In general, coil coating plants are typically located near steel and aluminum plants to reduce raw material shipping costs. High transportation costs influence the geographic market where coated coil products are exchanged. As shown in Table 8-4, over half of the potentially affected facilities are located in six states, mostly in the "rust-belt." Pennsylvania has the highest number of facilities (13, or 16 percent of total), followed by Alabama (8), Ohio (7), Indiana and Texas (both with six facilities), and Illinois (5).

Table 8-3. Summary of Coil Coating Facilities by Producer Type: 1997

Item	Producer Type			All Facilities[a]
	Toll Only	Captive Only	Both	
Facilities (share)	30 (39.5%)	29 (38.2%)	17 (22.4%)	76
Coating Lines (share)	45 (38.8%)	45 (38.8%)	26 (22.4%)	116
Facility Employment Average	241.9	364.2	183.5	277.6
Coating Line Employment Average	66.8	30.7	33.4	44.6

[a] 76 facilities reported producer type These 76 facilities operate 116 coating lines.

Table 8-4. Location of Potentially Affected Facilities by State: 1997

State	Number of Facilities	Percentage
PA	13	15.9%
AL	8	9.8%
OH	7	8.5%
IN	6	7.3%
TX	6	7.3%
IL	5	6.1%
Other	37	45.1%
Total	82	100.0%

8.2.4.2 Companies.

The Agency identified 49 ultimate parent companies for the metal coil facilities and obtained their sales and employment data from either their survey response or one of the following secondary sources:

- Dun and Bradstreet Market Identifiers [8]
- Hoover's Company Profiles [9]
- Business and Company ProFile [10]
- Company Websites.

Appendix C provides a listing of the 49 companies that own and operate the 82 non-CBI potentially affected facilities within this source category. The average (median) annual sales across all companies reporting data were $1.8 billion ($650 million). This includes revenue from operations other than metal coil coating. The average (median) employment was 9,918 (2,512) employees. The top four companies in annual sales are:

- Alcoa—$15.34 billion with 103,500 employees.
- Alusuisse-Lonza Group Ltd—$6.98 billion with 28, 495 employees.
- Crown Cork and Seal Company, Inc.—$8.3 billion with 38, 459 employees.
- Reynolds Metals Company—$5.86 billion with 20,000 employees.

Metal coil coating companies can also be grouped into small and large categories using Small Business Administration (SBA) general size standard definitions by SIC Codes. Responses by metal coil coating facilities to the industry survey indicated more than 30 different SIC codes with a small business definition range from 100 to 1,000 employees. Using these guidelines and available data, the Agency has identified 19 small businesses, or 38.8 percent of total. The annual average (median) sales for these companies are $51.7 ($41.0) million. The average (median) employment for these companies is 245 (175) employees. Many of these small coil coating companies compete in smaller niche markets [6].

Based on responses to the Section 114 letters [7], Table 8-5 provides a summary of the descriptive statistics for coil coating facilities by ownership size. As shown, the 19 small companies own and operate 21 coil coating facilities, or 25.6 percent of total, with an average of 1.1 facility per company. The 30 large companies own and operate 61 coil coating facilities, or 74.4 percent, with an average of 2 facilities per company. Coil coating lines are distributed similarly across these facilities with the average by group and overall being roughly 1.5 coating lines per facility. Furthermore, facilities owned by large companies are larger in terms of average number of employees, i.e., 310 employees per facility versus 157 employees per facilities. Facilities owned by large companies also have a larger average absolute number of employees devoted to their coating line but less relative to facility employment.

8.2.4.3 <u>Industry Trends</u>.

Industry has focused on the development of new or improved applications and processes. For example, NKK Corporation announced the development of a new precoated steel sheet in fall

of 1998. The company plans to market is for use in audiovisual equipment and home appliances, and is targeting production levels to 1,000 tons per month by fiscal 1999 [11]. On the process side, Material Sciences Corporation (MSC) has developed a high-speed powder coating technology and by the end of 1999, plans on operating a 54 inch line running at 400 fpm. Current powder coating lines typically run at 200 fpm [12].

Table 8-5. Summary of Coil Coating Facilities by Ownership Size: 1997

Item	Facilities Owned by		All Facilities
	Small Companies	Large Companies	
Facilities	21	61	82
Toll	6	24	30
Captive	7	22	29
Both	5	12	17
Not reporting	3	3	6
Coating Lines	31	94	125
Share of total reported	25%	75%	
Facility Employment			
Average	157.1	310.3	277.6
Median	97.5	165.0	126.0
Minimum	26	24	24
Maximum	1,000	2,500	2,500
Coating Line Employment			
Average	30.4	48.7	44.6
Median	30.0	34.0	30.0
Minimum	6	4	4
Maximum	115	194	194

8.2.5 Market Data

Competition within the coil coating industry is regional due to the high cost of transporting sheet metal coils [5]. The coil coatings industry has experience rapid growth since the early 1990s with an annual growth rate of 6 percent per year. As shown in Table 8-6, for 1997, 4.9 million tons of coated coil were shipped. Of this total, steel coil shipments were 4.2 million tons, or 85 percent, and aluminum coil shipments were 0.7 million, or 15 percent. Industry also reported data on square footage of coated coil for 1997 (13 billion square feet) because it is a better measure of coil coating requirements. Table 8-6 also provides estimates of 1996 shipments based on reported annual growth rates.

To our knowledge, no publicly available price data exists for coated metal coil products.

However, one coil company does report coil coating service revenues and estimates its share of market production for 1996 [5]. Based on this data, the Agency estimated a price of toll coating services to be roughly $150 per ton of coil processed. Combining this estimate with data on the substrate value provides a rough estimate of the price for coated metal coils. Therefore, using the substrate costs from Table 8-1 and the relative share of steel and aluminum coated from Table 8-6, we compute a value of coated metal coils of $3,900 million and a price of roughly $800 per ton for 1997. The value added of coating the metal coil is approximately 20 percent of the total value or price of the final product (i.e., $150 divided into $800).

Table 8-6. Shipments of Coated Metal Coils by Metal Type (10^6 tons)

Type	1997	1996
Steel	4.2	3.7
Aluminum	0.7	0.6
Total	4.9	4.3

Source: Reference 3

8.2.5.1 Market Trends.

Industry representatives anticipate a growth rate of 8 to 10 percent for 1998 and 1999 [13]. Growth in the building and construction market is expected to contribute to strong demand. Representatives see future growth in the appliance market, particularly the refrigeration segment. They also see new opportunities in full-body applications in the automotive industry as well as office furniture segment. Recently, coil coaters have expressed a desire in forming partnerships with steel service centers in identifying new end-user demands [13].

8.3 ECONOMIC IMPACTS

The MACT standards on metal coil coating facilities require these producers to install new, replace old, or upgrade existing equipment designed to destroy (e.g., incineration) or capture (e.g., PTEs) hazardous air pollutants currently being released to the environment. As described in Chapter 7 of this document, these costs will vary across facilities depending upon their physical characteristics and baseline controls. These regulatory costs will have financial

implications for the affected producers, and broader implications as these effects are transmitted through market relationships to other producers and consumers. These potential economic impacts are the subject of this section.

Inputs to the economic analysis include:

- Baseline characterization of metal coil coating facilities based on responses to the Section 114 letters [7].
- Baseline market data as projected from industry and secondary sources.
- Compliance cost estimates for individual facilities (through model plants) to meet the MACT floor standards.

The Agency has estimated the national total annual compliance costs for this regulation to be $5.9 million in 1997. Because these costs are such a small share of the coating operations and overall economic activity at affected facilities, the analysis focuses on the magnitude and distribution of these costs across affected entities (facilities and coating lines) and affected inputs and products (coating services and coated metal coils). The following subsections address the economic impacts of the regulation on metal coil coating facilities, coating lines at these facilities, and the product markets served by these facilities.

8.3.1 Facility Impacts

Absent facility-level sales data, the Agency measured the economic impact on metal coil coating facilities based on the compliance costs incurred per facility and per facility employee. As described in Section 8.2, these facilities may be categorized by producer type (i.e., toll, captive, or both) and by ownership size (owned by small or large company). The economic impacts on these facilities are presented below for both categories. The projected economic impacts on the owners of these facilities are provided in Section 8.4 "Small Business Impacts."

Table 8-7 summarizes the magnitude and distribution of compliance costs across facilities by producer type. Captive only facilities are expected to incur 62 percent of the total annual compliance costs of the regulation ($3.6 million of $5.8 million for facilities reporting producer type), while toll only facilities incur 24 percent ($1.4 million) and facilities that perform both functions incur 14 percent ($0.8 million). It follows that the relative impact of these costs per facility is higher for captive only facilities at $124,000 per year compared to the average across all facilities at $75,800 per year. Alternatively, the annual cost per facility for toll only facilities and facilities that perform both functions is lower than the industry average at $46,700 and $47,500,

respectively. The estimates shown in Table 8-7 also indicate that the distribution of costs across facilities is skewed toward the lower impact levels, i.e., the median value is significantly less than the average value. This outcome results from the large number of facilities that either incur minimal costs (facilities that are already permitted as synthetic minor sources) or only those costs related to initial performance testing and annually recurring monitoring, reporting, and recordkeeping (facilities that are already in compliance with the proposed regulation). Furthermore, as shown in Table 8-7, similar relative impacts for costs per facility employment are observed across these producer types.

Table 8-7. Summary of Compliance Cost Burden on Coil Coating Facilities by Producer Type: 1997

	Producer Type			
Compliance Costs	**Toll Only**	**Captive Only**	**Both**	**All Facilities**
Per Facility ($\$10^3$/yr)				
Average	$46.7	$124.0	$47.5	$75.8
Median	$21.0	$24.5	$19.7	$21.0
Minimum	$0.0	$0.0	$0.0	$0.0
Maximum	$277.1	$780.7	$243.4	$780.7
Per Facility Employee ($/yr)				
Average	$373	$831	$463	$576
Median	$163	$155	$176	$175
Minimum	$0	$0	$0	$0
Maximum	$1,802	$6,612	$2,039	$6,612

Table 8-8 summarizes the magnitude and distribution of compliance costs across facilities by ownership size. Facilities owned by small companies (as defined in Section 4) are expected to incur only 8.5 percent of the total annual compliance costs of the regulation ($0.5 million of $5.9 million for all facilities), while facilities owned by large companies incur 91.5 percent ($5.7 million). It follows that the relative impact of these costs per facility is much lower for facilities owned by small companies at $25,200 per year compared to the average across all facilities at $75,800 per year. Alternatively, the annual cost per facility for facilities owned by large companies is higher than the industry average at $93,200. As shown in the previous table, the estimates shown here indicate that the distribution of costs across facilities is skewed toward the lower impact levels, i.e., the median value is significantly less than the average value. Furthermore, the relative cost burden measured per employee is distributed in a similar fashion across facilities owned by small and large companies, i.e., $248 per employee vs. $664 per

employee.

Table 8-8. Summary of Compliance Cost Burden on Coil Coating Facilities by Ownership Size: 1997

Compliance Cost	Facilities Owned by		All Facilities
	Small Companies	Large Companies	
Per Facility ($\$10^3$/yr)			
Average	$25.2	$93.2	$75.8
Median	$11.5	$31.3	$21.0
Minimum	$0.0	$0.0	$0.0
Maximum	$169.9	$780.7	$780.7
Per Facility Employee ($/yr)			
Average	$248	$664	$576
Median	$72	$206	$175
Minimum	$0	$0	$0
Maximum	$1,335	$6,612	$6,612

8.3.2 Coating Line Impacts

Absent coating line-level sales data, the Agency measured the economic impact on metal coil coating lines based on the compliance costs incurred per coating-line and per coating-line employee. As described in Section 8.2, these facilities may be categorized by producer type (i.e., toll, captive, or both) and by ownership size (owned by small or large company). The economic impacts on these coating lines are presented below for both categories. The projected economic impacts on the owners of these coating lines and facilities are provided in Section 8.4 "Small Business Impacts."

Table 8-9 summarizes the magnitude and distribution of compliance costs across coating lines by producer type. Based on the relative incidence of compliance costs across facilities by producer type, it follows that the relative impact of these costs per coating line is higher for captive only facilities at $101,800 per year compared to the average across all coating lines at $60,900 per year. Alternatively, the annual cost per coating line for toll only facilities and facilities that perform both functions is lower than the industry average at $37,500 and $26,700, respectively. The estimates shown in this table also indicate that the distribution of costs across coating lines is skewed toward the lower impact levels, i.e., the median value is significantly less than the average value. As mentioned in the previous section, this outcome results from the large number of facilities that either incur zero costs or only those costs related initial performance

testing and annually recurring monitoring, reporting, and recordkeeping. Furthermore, coating lines at toll only facilities have twice the employment level as other producer types so that their impact measure per employee is even less than the relative cost differential per coating line.

Table 8-9. Summary of Compliance Cost Burden on Coil Coating Lines by Producer Type: 1997

	Producer Type			
Compliance Costs	**Toll Only**	**Captive Only**	**Both**	**All Facilities**
Per Coating Line ($\$10^3$/yr)				
Average	$37.5	$101.8	$26.7	$60.9
Median	$20.3	$22.8	$16.0	$19.7
Minimum	$0.0	$0.0	$0.0	$0.0
Maximum	$277.1	$780.7	$122.4	$780.7
Per Coating Line Emp.($/yr)				
Average	$856	$8,996	$2,177	$4,748
Median	$277	$1,760	$405	$691
Minimum	$0	$0	$0	$0
Maximum	$5,149	$63,217	$15,774	$63,217

Table 8-10 summarizes the magnitude and distribution of compliance costs across coating lines by ownership size. Based on the relative incidence of compliance costs across facilities by ownership size, it follows that the relative impact of these costs per coating line is much lower for those owned by small companies at $17,000 per year compared to the average across all coating lines at $60,900 per year. Alternatively, the annual cost per coating line owned by large companies is higher than the industry average at $76,200. Similar to results from the previous table, the estimates shown here indicate that the distribution of costs across coating lines is skewed toward the lower impact levels, i.e., the median value is significantly less than the average value. Furthermore, the relative cost burden measured per coating line employee is distributed in a similar fashion across ownership size, i.e., $1,175 per employee for facilities owned by small companies vs. $5,594 per employee for those owned by large companies.

Table 8-10. Summary of Compliance Cost Burden on Coil Coating Lines by Ownership Size: 1997

Compliance Cost	Facilities Owned by		All Facilities
	Small Companies	Large Companies	
Per Coating Line ($\$10^3$/yr)			
Average	$17.0	$76.2	$60.9
Median	$11.5	$26.4	$19.7
Minimum	$0.0	$0.0	$0.0
Maximum	$82.8	$780.7	$780.7
Per Coating Line Emp. ($/yr)			
Average	$1,175	$5,594	$4,748
Median	$59	$901	$692
Minimum	$0	$0	$0
Maximum	$6,677	$63,217	$63,217

8.3.3 Market Impacts

In conducting an economic impact analysis, the Agency typically models the responses by producers and markets to the imposition of the proposed regulation. The alternatives available to producers in response to the regulation and the context of these choices are important in determining the economic and financial impacts. Economic theory predicts that producers will take actions to minimize their share of the regulatory costs. Producers decide whether to continue production and, if so, to determine the optimal level consistent with market signals. These choices and market feedbacks allow them to pass costs forward to the consumers of their end-products or services and/or to pass costs backward to the suppliers of production inputs. However, based on the small absolute and relative magnitude of the estimated regulatory costs, the Agency focuses the economic impact analysis on the initial distribution of costs across facilities and coating lines presented above. The financial impact of the regulation on affected businesses is analyzed in Section 8.4.

Table 8-11 shows that the total annual compliance cost estimate of $5.9 million for the metal coil coating industry is small relative to the sales value of its end-product, i.e., coated metal coil, and the value of inputs to the production process. Absent observed price and cost data for this industry, we gauge these potential market impacts using approximations for end-product and input values based on available market data presented in Section 8.2. As shown in Table 8-11, total annual compliance costs for this regulation represent less than 0.2 percent of the computed

value of coated metal coils for 1997. Therefore, the potential increase in the projected baseline market price of $790 per ton would be a similarly small proportion, or only $1.27 per short ton. Furthermore, the regulatory costs are also expected to represent only 0.8 percent of the computed value of coating services ($150 per ton of coated metal coil), which does not indicate the cost of coating operations will increase sufficiently to cause producers to cease or alter their current coating operations.

Table 8-11. Compliance Cost Share of the Value of Coated Metal Coil and Inputs: 1997

Item	Baseline Value		Compliance Cost Share (%)
	Total (10^6)	Per Unit [a] ($/ton)	
Coating Operations	$735	$150	0.8%
Coatings	$612	$125	1.0%
Value Added	$123	$25	5.0%
Substrates	$3,150	$643	0.2%
Steel	$1,750	$416	0.3%
Aluminum	$1,400	$2,000	0.4%
Coated Metal Coils	$3,885	$793	0.16%

[a] Per unit value as measured based on the reported volume of coated metal coil volume in 1997 of 4.9 million short tons with the per unit values for substrate measure based on their share of that total, i.e., 4.2 million for steel and 0.7 million for aluminum.

8.4 SMALL BUSINESS IMPACTS

This regulatory action will potentially affect the economic welfare of owners of metal coil coating facilities. The ownership of these facilities ultimately falls on private individuals who may be owner/operators that directly conduct the business of the firm (i.e., "mom and pop shops" or partnerships) or, more commonly, investors or stockholders that employ others to conduct the business of the firm on their behalf (i.e., privately-held or publicly-traded corporations). The individuals or agents that manage these facilities have the capacity to conduct business

transactions and make business decisions that affect the facility. The legal and financial responsibility for compliance with a regulatory action ultimately rests with these agents; however, the owners must bear the financial consequences of the decisions. Environmental regulations like this rule potentially affect all businesses, large and small, but small businesses may have special problems in complying with such regulations.

The Regulatory Flexibility Act (RFA) of 1980 requires that special consideration be given to small entities affected by federal regulation. The RFA was amended in 1996 by the Small Business Regulatory Enforcement Fairness Act (SBREFA) to strengthen the RFA's analytical and procedural requirements. Prior to enactment of SBREFA, EPA exceeded the requirements of the RFA by requiring the preparation of a regulatory flexibility analysis for every rule that would have any impact, no matter how minor, on any number, no matter how small, of small entities. Under SBREFA, however, the Agency decided to implement the RFA as written and that a regulatory flexibility analysis will be required only for rules that will have a significant impact on a substantial number of small entities.

This section identifies the businesses that will be affected by this proposed rule and provides a preliminary screening-level analysis to assist in determining whether this rule is likely to impose a significant impact on a substantial number of the small businesses within this industry. The screening-level analysis employed here is a "sales test," which computes the annualized compliance costs as a share of sales for each company. Appendix A provides a listing of the 49 companies that own and operate the 82 non-CBI potentially affected facilities within this source category.

The Small Business Administration (SBA) defines a small business in terms of the sales or employment of the owning entity. These thresholds vary by industry and are evaluated based on the industry classification (SIC Code) of the impacted facility. Responses by metal coil coating facilities to the industry survey indicated over 30 different SIC codes with a small business definition range from 100 to 1,000 employees. The Agency developed a company's size standard based on the reported SIC codes for these facilities. In determining the companies' SIC size standard, the following assumptions were made:

- In cases where companies own facilities with multiple SIC's, the most conservative SBA definition was used. For example, if a company owned facilities within SICs 3448 (size standard equal to 500 employees) and 3334 (size standard equal to 1,000 employees), we used the size standard of 1,000 employees.

- Four companies owning facilities that did not report an SIC code. We assigned these companies the most conservative size standard of 1,000 employees.

Based on EPA's database, 19 of the companies owning facilities (38.8 percent) that perform metal coil coating were identified as small with the remaining 30 companies being large (61.2 percent) (See Appendix C for detailed listing).

For the purposes of assessing the potential impact of this rule on these small businesses, the Agency calculated the share of annual compliance cost relative to baseline sales for each company. When a company owns more than one facility, the costs for each facility it owns are summed to develop the numerator of the test ratio. For this screening-level analysis, annual compliance costs were defined as the engineering control costs imposed on these companies; thus, they do not reflect the changes in production expected to occur in response to imposition of these costs and the resulting market adjustments.

Table 8-12 reports total annual compliance costs and the number of companies impacted at various threshold levels. It also provides summary statistics for the cost-to-sales ratios (CSRs) for small and large companies reporting the necessary sales data. Although small businesses represent almost 39 percent of the companies within this source category, Table 4-1 shows that their aggregate compliance costs totals $0.5 million, or only 8.5 percent of the total industry costs of $5.9 million. Under the proposed rule, the annual compliance costs for small businesses range from zero to 1.65 percent of sales with 7 of the 19 small businesses not incurring any regulatory costs. The vast majority of small companies with sales data have CSRs below 0.5 percent.[a] The mean (median) cost-to-sales ratio is 0.17 (0.03) percent for the identified small businesses and 0.02 (<0.01) percent for the large businesses. Therefore, based on the results of this screening analysis, the Agency has determined that this regulation does not impose a significant impact on a substantial number of small businesses.

[a] Three of the four small companies without sales data incur compliance costs ranging from $11,520 to $82,850 per year. Therefore, annual company sales for these companies would have to fall below $1.15 or $8.3 million per year for these companies to be impacted at the 1 percent level.

Table 8-12. Summary Statistics for SBREFA Screening Analysis: MACT Floor Alternative

	Small		Large		All Companies	
Total Number of Companies	19		30		49	
Annual Compliance Costs ($10³/yr)	$528.3		$5,687.5		$6,215.8	
	Number	Share	Number	Share	Number	Share
Companies with Sales Data[a]	16	100%	30	100%	46	100%
Compliance costs are 0% of sales	7	44%	1	3%	8	18%
Compliance costs are >0 to 1% of sales	8	50%	29	97%	37	80%
Compliance costs are ≥1 to 3% of sales	1	6%	0	0%	1	2%
Compliance costs are ≥3% of sales	0	0%	0	0%	0	0%
Compliance Cost-to-Sales Ratios						
Average	0.17%		0.02%		0.07%	
Median	0.03%		<0.01%		<0.01%	
Maximum	1.65%		0.09%		1.65%	
Minimum	0.00%		0.00%		0.00%	

Note: Assumes no market responses (i.e., price and output adjustments) by regulated entities.

[a] Of the four small companies without sales data only one incurs no compliance costs, while the remaining three incur compliance costs ranging from $11,520 to $82,850 per year. Therefore, annual company sales for these companies would have to fall below $1.15 or $8.3 million per year for these companies to be impacted at the 1 percent level.

8.5 REFERENCES

1. U.S. Environmental Protection Agency. 1998. Preliminary Industry Characterization Metal Coil Surface Coating Industry. <<http://www.epa.gov/ttn/uatw/coat/mcoil/met_coil.html>>.

2. Bourguignon, Edward W. 1998. "Coil Coating Industry Promises Continuing Growth." Paint & Coatings Industry. 14 (6): 33.

3. Bourguignon, Edward W. 1999. "Growth Accelerating for Coil Coating." Paint & Coatings Industry. 15 (3): 44-45.

4. National Coil Coaters Association. 1999. "Why Coil Coating." <http://www.coilcoaters.org/about/whycc.html>. Obtained August 30, 1999.

5. Material Sciences Corporation. 1997. 10-K Report filed May 28, 1997. <http://www.sec.gov/Archives/edgar/data/755003/0000950131-97-003669.txt>. Obtained September 1, 1999.

6. Stundza, Tom. 1998. "Demand Keeps Pace with Supply." Purchasing Online. April, 9 1998. <http://www.manufacturing.net/magazine..achives/1998/pur0409.94/041steel.html.> Obtained August 31, 1999.

7. U.S. Environmental Protection Agency. ICR Responses. Metal Coil Surface Coatings MACT Docket Number A-97-47, Item Numbers II-D-1 through II-D-113. Office of Air Quality Planning and Standards. Research Triangle Park, NC. Responses received September 1998 - April 1999.

8. Dun & Bradstreet. 1999. Dun's Market Identifiers [computer file]. New York, NY: Dialog Corporation.

9. Hoover's Incorporated. 1999. Hoover's Company Profiles. Austin, TX: Hoover's Incorporated. <http://http://www.hoovers.com/>.

10. Information Access Corporation. 1999. Business & Company ProFile [computer file]. Foster City, CA: Information Access Corporation.

11. Drukenbrod, Mark. 1998. "NKK Develops Tougher Coil Coating." Paint & Coatings Online. November 30, 1998. Obtained August, 1999.

12. Graves, Beverly. 1999. "Coil Powder Coating." Pfonline. <http:www.pfonline.com/articles/ 099701.html>. Obtained August 31, 1999.

13. Pinkham, Myra. 1999. "Demand Growing for Prepainted Coil." Metal/Center News. February, 1999.

APPENDIX A
PARTICIPANTS IN THE DATA COLLECTION EFFORT

Name	Affiliation
Glen Anderson	National Coil Coaters Association
Tom Ashy	Metal Prep
Kevin Bald	Reynolds Metals
Kevin Barnett	Alcoa
Jim Bercaw	Technical Coatings
Allen Bracey	Vulcraft
Sam Bruntz	Commonwealth Aluminum
Stephen Byrne	Cytec Industries
Dennis Carson	PPG Industries
Roy Carwile	Alcoa
Dwight Cohagan	The Sherwin Williams Company
Jim Dodson	Roll Coater
Steven Dubois	Alcan
Jack Farmer	Research Triangle Institute
Bob Fegley	EPA/ORD
Tyler Fox	EPA/OAQPS
Barbara Francis	Chemical Manufacturers Association
David Friedland	Beveridge and Diamond - Representing NCCA
Kelly Garbin	National Coil Coaters Association
Gregory Gemgnani	Prior Coated Metals
Steve Gross	Pennsylvania Bureau of Air Quality
Susan Hoyle	Pennsylvania Bureau of Air Quality
Jesse Hackenberg	Chromographic Processing
Madelyn Harding	The Sherwin Williams Company
Gary Hayden	MSC Pre Finish Metals
Linda Herring	EPA/OAQPS
William Jelf	AKZO Nobel Coatings

Name	Affiliation
Matt Johnston	Worthington Industries
Rhea Jones	EPA/OAQPS
Joseph Junker	ARCO Chemical Co.
Peter Kehayes	Industry Consultant
Trish Koman	EPA/OAQPS
Mike Kosuko	EPA/ORD
Gail Lacy	EPA/OAQPS
David Leligdon	Precoat Metals
William Madigan	Metropolitan Metal Sales
Brent Marable	EPA Region V
Joseph McCloskey	Benjamin Moore & Co.
Tom McElven	Owens Corning Metal Systems
Arnold Medberry	EPA Small Business Ombudsman
Larry Melgary	Northern Coatings and Chemical Company
Hank Nauer	Illinois Environmental Protection Agency
Carol Neimi	Representing CMA Solvent's Council
Bob Nelson	National Paint and Coatings Association
Stanley Ogrodnick	Owens Corning Metal Systems
Dave Ozawa	Mostardi-Platt Associates
Venkata Panchakaria	Florida Dept. of Environmental Protection
Alton Peters	Research Triangle Institute
Jack Peterson	Allegheny County Health Dept.
Mary Ellen Roddy	National Paint and Coatings Association
Alexander Ross	Rad Tech International, NA
Norbert Saatkoski	Roll Coater
Mona Salem	Arvin Roll Coater
Jason Schnepp	Illinois Environmental Protection Agency

Name	Affiliation
Mohamed Serageldin	EPA/OAQPS
George Smith	EPA/OAQPS
Gary Stimpson	Nichols Aluminum
Robert P. Strieter	Aluminum Association
Scott Throwe	EPA/OECA
William Vallier	Gentek Building Products
Deon Vaughan	Owens Corning Metal Systems
Greg Verret	Environmental Resources Management
Bill Vinzant	Kaiser Aluminum
Milton Wright	Research Triangle Institute
Steve York	Research Triangle Institute
Tom Young	MSC Pre Finish Metals

APPENDIX B
COIL COATING PLANT LIST

Facility	City	State	No. of Lines	Control Device	Total Annual HAP Emissions (Tons)
Stanley Tools (Stanley Works)	New Britain	CT	8	None	0.1
Centria - Ambridge, PA	Ambridge	PA	1	Thermal Incinerator	40.8
WPSC - Wheeling Corrugating Co.	Beech Bottom	WV	1	Thermal Incinerators	25.3
Arrow Group Industries, Inc.	Haskell	NJ	2	Thermal Incinerator	0.8
Englert, Inc.	Perth Amboy	NJ	1	Thermal Incinerator	2.7
GENTEK Building Products	Woodbridge	NJ	1	Catalytic Incinerator	23.4
Crown Cork and Seal Co. Inc.	Toledo	OH	2	Catalytic Incinerators	106.9
Golden Aluminum Company, Fort Lupton	Fort Lupton	CO	1	Thermal Incinerator	0.5
Alumax Mill Products, Inc.	Lancaster	PA	1	Regenerative Thermal Incinerator	2.5
Alumax Mill Products, Inc. - Texarkana, TX	Texarkana	TX	1	Thermal Incinerator	1.3
American Nickeloid - Walnutport, PA	Walnutport	PA	1	Regenerative Thermal Incinerator	2.2
Apollo Metals. Ltd.	Bethlehem	PA	2	Catalytic Incinerator	24.4
Chromagraphic Processing Company	Williamsport	PA	6	Catalytic Incinerators	10.0
Amerimax Home Products Inc.	Lancaster	PA	1	Thermal Incinerator	0.3
NAPCO Inc.	Valencia	PA	1	Thermal Incinerator	43.6
Prior Coated Metals, Inc.	Allentown	PA	1	Thermal Incinerator	19.8
Springs Window Fashions Division, Inc.	Montgomery	PA	9	Catalytic Incinerator	14.7
Worthington Steel Company	Malvern	PA	1	None	8.5
Wise Alloys - Alloys Plant (formerly Reynolds Metals Co. - Alloys Plant)	Muscle Shoals	AL	1	Thermal Incinerators	321.4
Wise Alloys - Sheffield, formerly Reynolds Metals Company - Sheffield Plant	Sheffield	AL	2	Thermal Incinerator	230.8
Wheeling Construction	Wilmington	NC	1	Thermal Incinerator	9.7
Decatur Aluminum Corp.	Decatur	AL	1	None	34.1
Hanna Steel Corporation - Fairfield	Fairfield	AL	1	Thermal Incinerator	2.7
Federal Mogul Sealing Systems	Athens	AL	2	Recuperative Thermal Incinerator, Catalytic Incinerator	0.0
Norandal USA, Inc.	Scottsboro	AL	1	Thermal Incinerator	1.1
Polymer Coil Coaters	Fairfield	AL	1	Thermal Incinerators	12.5
Vulcraft - Florence, SC	Florence	SC	1	None	28.0
Vulcraft - Norfolk, NE	Norfolk	NE	1	None	23.3
Vulcraft - Grapeland, TX	Grapeland	TX	1	None	7.1
Vulcraft - St. Joe, IN	St. Joe	IN	1	None	2.9
Vulcraft - Fort Payne, AL	Fort Payne	AL	1	None	11.5
Cooper Coil Coating	Clearwater	FL	2	Thermal Incinerators	0.6
Eagle-Picher Industries, Wolverine Gasket Company, Lisbon, FL	Lisbon	FL	1	Thermal Incinerators	29.0
Eagle-Picher Industries, Wolverine Gasket Division, Blacksburg, VA	Blacksburg	VA	2	Thermal Incinerators	19.9
Eagle-Picher Industries, Wolverine Gasket Division, Blacksburg, VA	Blacksburg	VA	1	Catalytic Incinerator	15.1
First American Resources Corporation	Mableton	GA	1	Thermal Incinerator	3.3
Metal Coaters of Georgia	Marietta	GA	1	Thermal Incinerator	42.8
Alusuisse Composites, Inc.	Benton	KY	1	Thermal Incinerator	2.4

Facility	City	State	No. of Lines	Control Device	Total Annual HAP Emissions (Tons)
Commonwealth Aluminum Corporation, Bedford Coil Coating Division	Bedford	OH	1	Thermal Incinerator	13.5
Commonwealth Aluminum Lewisport, Inc.	Lewisport	KY	1	Thermal Incinerator	14.7
Commonwealth Aluminum - Torrance, CA	Torrance	CA	1	Thermal Incinerator	0.1
Logan Aluminum Inc.	Russellville	KY	1	Thermal Incinerator	0.9
Doublecote, L.L.C.	Jackson	MS	1	Regenerative Thermal Incinerator	0.9
Hunter Douglas	Shannon	MS	2	Thermal Incinerators	0.4
Consolidated Metal Products	Columbia	SC	1	Thermal Incinerator	3.5
Metal Prep - Memphis, TN	Memphis	TN	1	Thermal Incinerator	16.4
Ormet Aluminum Mill Products Corporation - Jackson, TN	Jackson	TN	1	Regenerative Thermal Incinerator	67.6
American Nickeloid - Peru, IL	Peru	IL	2	Regenerative Thermal Incinerators	11.5
Chesapeake Finished Metals, Inc.	Baltimore	MD	1	Regenerative Thermal Incinerator	12.3
Chicago Finished Metals	Bridgeview	IL	2	Regenerative Thermal Incinerator, Recuperative Thermal Incinerator	19.4
Homeshield Fabricated Products/A Division of Quanex	Chatsworth	IL	1	Thermal Incinerator	3.7
MSC Pre Finish Metals (Pinole Point)	Richmond	CA	1	Recuperative Thermal Incinerator	6.7
Jupiter Aluminum Corp.	Fairland	IN	1	Thermal Incinerator	11.1
	Greenfield	IN	2	Thermal Incinerators	84.2
Roll Coater Inc. - Kingsbury, IN	Kingsbury	IN	2	Thermal Incinerators	88.7
Roll Coater, Weirton, WV	Weirton	WV	1	Thermal Incinerator	8.1
Kirsch	Sturgis	MI	1	Thermal Incinerator	3.7
Edco Products, Inc.	Hopkins	MN	1	Thermal Incinerator	0.1
Alcoa Building Products - Sidney, OH	Sidney	OH	2	Thermal Incinerators	20.6
Aluminum Company of America - Lebanon Operations	Lebanon	PA	3	Catalytic Incinerators, Regenerative Carbon Adsorption	109.9
Aluminum Company of America - Warrick Operations	Newburgh	IN	3	Thermal Incinerators	159.0
American Metals Corporation	Westlake	OH	1	Thermal Incinerator	12.2
Centria - Cambridge, OH	Cambridge	OH	1	Thermal Incinerator	23.8
L-S II Electro-Galvanizing Company	Columbus	OH	1	Recuperative Thermal Incinerator	0.2
Wheeling-Pittsburgh (Pittsburgh-Canfield Plant)	Canfield	OH	1	Thermal Incinerator	17.3
MSC Walbridge Coatings Inc.	Walbridge	OH	1	Incineration Zone within curing oven	7.1
Rollex Corporation	Ixonia	WI	2	Regenerative Thermal Incinerator	0.9
Allmet Building Products, Inc.	Mequite	TX	1	Thermal Incinerator	17.5
Berridge Manufacturing Company	San Antonio	TX	1	Thermal Incinerator	0.8
Metal Prep	Houston	TX	1	Thermal Incinerator	20.3
Nichols Aluminum	Davenport	IA	1	Thermal Incinerator	27.8
Precoat Metals - St. Louis, MO	St. Louis	MO	2	Thermal Incinerators	20.6
Precoat Metals - Granite City, IL	Granite City	IL	1	Thermal Incinerators	28.6
Precoat Metals - Chicago, IL	Chicago	IL	1	Recuperative Thermal Incinerators	101.9
Precoat Metals - Houston, TX	Houston	TX	1	Recuperative Thermal Incinerators	43.4
Precoat Metals - Jackson, MS	Jackson	MS	1	Thermal Incinerators	18.5

Facility	City	State	No. of Lines	Control Device	Total Annual HAP Emissions (Tons)
Precoat Metals - Portage, IN	Portage	IN	1	Recuperative Thermal Incinerator, Regenerative Thermal Incinerator	83.0
Precoat Metals Division Sequa Coatings Corporation - McKeesport, PA	McKeesport	PA	2	Thermal Incinerator	29.6
K.B.P. Coil Coater, Inc.	Denver	CO	1	Thermal Incinerator	0.2
Metal Coaters of California	Rancho Cucamonga	CA	1	Regenerative Thermal Incinerator	6.7
NAPP Systems Inc.	San Marcos	CA	4	Condenser and Water Spray Scrubber	1.4
Kaiser Aluminum and Chemical Corp. - Trentwood Works	Spokane	WA	1	Thermal Incinerator	3.7

APPENDIX C:
SUMMARY DATA FOR COMPANIES OWNING METAL COIL COATING FACILITIES

Table C-1. Summary Data for Companies Operating Metal Coil Coatings Facilities

Company Name	Number of Facilities	Sales(10^3)	Employment	Small Business
Alcoa Inc.	6	$15,339,800	103,500	No
Allmet Building Products, Inc.	1	$45,000	170	Yes
Alusuisse-Lonza Group Ltd.	1	$6,984,700	29,495	No
American Buildings Co.	1	$440,700	2,850	No
American Nickeloid Co.	2	NA	250	Yes
Amerimax Home Products Inc.	1	$92,000	290	Yes
Arrow Group Industries, Inc.	1	NA	430	Yes
Arvin Industries, Inc.	3	$2,498,700	14,963	No
Berridge Manufacturing Co., Inc.	1	$41,000	122	Yes
Bouras Industries Inc.	1	$190,000	525	No
Centria International	2	$150,000	605	No
Chicago Metallic Corporation	2	$95,300	NA	Yes
Coastal Aluminum Rolling Mills, Inc./ Chromographic Processing Company	1	$10,300	110	Yes
Commonwealth Industries, Inc.	3	$967,900	2,173	No
Consolidated Systems Inc.	1	$650,000	650	No
Crown Cork and Seal Co. Inc.	2	$8,300,000	38,459	No
Decatur Aluminum Corp.	1	NA	270	Yes
Doublecote, L.L.C.	1	$3,600	65	Yes
Eagle-Picher Ind., Inc.	3	$826,100	6,600	No
Edco Products, Inc.	1	$8,000	100	Yes
Englert Inc.	1	$14,700	175	Yes
Federal Mogul Corporation	1	$4,468,700	54,350	No
First American Resources Corp.	1	$45,000	85	Yes
Frederick Cooper Metal Finishing Limited (London)	1	$10,000	85	Yes
Genstar Capital LLC	1	$110,000	NA	No
Hanna Steel Corporation	1	$150,000	500	Yes

Table C-1. Summary Data for Companies Operating Metal Coil Coatings Facilities (continued)

Company Name	Number of Facilities	Sales(10^3)	Employment	Small Business
Hunter Douglas N.V.	1	$1,459,600	13,547	No
Jupiter Aluminum Corp.	1	$80,000	180	Yes
K.B.P. Coil Coaters Inc.	1	$33,000	NA	Yes
Kaiser Aluminum Corporation	1	$2,256,400	9,200	No
Koninklijke Hoogovens NV	1	$5,756,900	21,942	No
Logan Aluminum Inc.	1	NA	750	Yes
Material Sciences Corporation	2	$469,100	1,206	No
NCI Buildings Systems., Inc	4	$675,300	3,700	No
Newell Company	1	$3,234,261	24,647	No
Noranda Inc.	1	$3,909,100	18,000	No
Nucor Corporation	5	$4,151,200	7,200	No
Ormet Corporation	1	$910,000	3,300	No
Polyfibran Technologies, Inc.	1	$60,000	1,000	No
Quanex Corporation	2	$797,500	3,405	No
Reynolds Metals Company	2	$5,859,000	20,000	No
Rollex Corp.	1	$120,000	500	Yes
Sequa Corporation	7	$1,802,400	11,050	No
Springs Industries, Inc.	1	$2,180,500	17,500	No
Stanley Works	1	$2,729,100	18,000	No
USG Corporation	1	$3,130,000	13,700	No
Venturian Corporation	1	$27,579	129	Yes
Wheeling Pittsburgh Steel	3	$642,000	4,000	No
Worthington Industries, Inc.	1	$1,763,100	6,500	No
Totals	82	$83,487,540	456,278	19

TECHNICAL REPORT DATA

(Please read Instructions on reverse before completing)

1. REPORT NO. EPA-453-P-00-001	2.	3. RECIPIENT'S ACCESSION NO.
4. TITLE AND SUBTITLE National Emission Standards for Hazardous Air Pollutants: Metal Coil Surface Coating Industry Background Information for Proposed Standards		5. REPORT DATE April 25, 2000 6. PERFORMING ORGANIZATION CODE
7. AUTHOR(S)		8. PERFORMING ORGANIZATION REPORT NO.
9. PERFORMING ORGANIZATION NAME AND ADDRESS U.S. Environmental Protection Agency Office of Air Quality Planning and Standards Research Triangle Park, NC 27711		10. PROGRAM ELEMENT NO. 11. CONTRACT/GRANT NO. 68-D6-0014
12. SPONSORING AGENCY NAME AND ADDRESS Director Office of Air Quality Planning and Standards Office of Air and Radiation U.S. Environmental Protection Agency Research Triangle Park, NC 27711		13. TYPE OF REPORT AND PERIOD COVERED Interim 14. SPONSORING AGENCY CODE EPA/200/04

15. SUPPLEMENTARY NOTES

16. ABSTRACT

This document contains a summary of the EPA's current level of knowledge on hazardous air pollutants and their emission points at metal coil surface coating facilities. This document presents descriptions of representative processes and operations, hazardous air pollutant emission sources and estimated emissions, and applicable air emission control technologies. The capital and annual costs of air emission controls are also presented in this document.

17. KEY WORDS AND DOCUMENT ANALYSIS

a. DESCRIPTORS	b. IDENTIFIERS/OPEN ENDED TERMS	c. COSATI Field/Group
Hazardous Air Pollutants Metal Coil Surface Coating Operations	Air Pollution Control	

18. DISTRIBUTION STATEMENT	19. SECURITY CLASS *(Report)*	21. NO. OF PAGES
Release Unlimited	Unclassified	
	20. SECURITY CLASS *(Page)*	22. PRICE
	Unclassified	

EPA Form 2220-1 (Rev. 4-77) PREVIOUS EDITION IS OBSOLETE