EPA-600/2-77-039
February 1977

Environmental Protection Technology Series

REVERSE OSMOSIS FIELD TEST: Treatment of Watts Nickel Rinse Waters

Industrial Environmental Research Laboratory
Office of Research and Development
U.S. Environmental Protection Agency
Cincinnati, Ohio 45268

RESEARCH REPORTING SERIES

Research reports of the Office of Research and Development, U.S. Environmental Protection Agency, have been grouped into five series. These five broad categories were established to facilitate further development and application of environmental technology. Elimination of traditional grouping was consciously planned to foster technology transfer and a maximum interface in related fields. The five series are:

1. Environmental Health Effects Research
2. Environmental Protection Technology
3. Ecological Research
4. Environmental Monitoring
5. Socioeconomic Environmental Studies

This report has been assigned to the ENVIRONMENTAL PROTECTION TECHNOLOGY series. This series describes research performed to develop and demonstrate instrumentation, equipment, and methodology to repair or prevent environmental degradation from point and non-point sources of pollution. This work provides the new or improved technology required for the control and treatment of pollution sources to meet environmental quality standards.

This document is available to the public through the National Technical Information Service, Springfield, Virginia 22161.

EPA-600/2-77-039
February 1977

REVERSE OSMOSIS FIELD TEST:

TREATMENT OF WATTS NICKEL RINSE WATERS

by

Kenneth J. McNulty
Robert L. Goldsmith
Arye Z. Gollan
Walden Research Division of Abcor, Inc.
Wilmington, Massachusetts 01887
for
The American Electroplater's Society, Inc.
Winter Park, Florida 32789

Grant No. R-803753

Project Officer

John Ciancia
Industrial Pollution Control Division
Industrial Environmental Research Laboratory - Cincinnati
Edison, New Jersey 08817

INDUSTRIAL ENVIRONMENTAL RESEARCH LABORATORY
OFFICE OF RESEARCH AND DEVELOPMENT
U.S. ENVIRONMENTAL PROTECTION AGENCY
CINCINNATI, OHIO 45268

DISCLAIMER

This report has been reviewed by the Industrial Environmental Research Laboratory - Cincinnati, U.S. Environmental Protection Agency, and approved for publication. Approval does not signify that the contents necessarily reflect the views and policies of the U.S. Environmental Protection Agency, nor does mention of trade names or commercial products constitute endorsement or recommendation for use.

FOREWORD

When energy and material resources are extracted, processed, converted, and used, the related pollutional impacts on our environment and even on our health often require that new and increasingly more efficient pollution control methods be used. The Industrial Environmental Research Laboratory - Cincinnati (IERL-CI) assists in developing and demonstrating new and improved methodologies that will meet these needs both efficiently and economically.

This report is a product of the above efforts. It was undertaken to demonstrate the effectiveness and economic feasibility of using reverse osmosis for closed-loop control of metal finishing rinse wastes under actual plant conditions. The reverse osmosis system concentrates the chemicals for return to the processing bath while purifying the wastewater for reuse in the rinsing operation. The results of the report are of value to R&D programs concerned with the treatment of wastewaters from various metal finishing, non-ferrous metal, steel, inorganic and other industries. Further information concerning the subject can be obtained by contacting the Metals and Inorganic Chemicals Branch of the Industrial Pollution Control Division.

David G. Stephan
Director
Industrial Environmental Research Laboratory
Cincinnati

ABSTRACT

A field test was conducted to determine the feasibility of using a polyamide reverse-osmosis membrane in hollow fine fiber configuration for closed-loop treatment of rinse water from a Watts-type nickel bath. Performance of the membrane module was determined by measuring the productivity (flow rate of purified water) and rejection (separation efficiency) as a function of operating time. Performance was monitored over 1600 hours (67 days) of operation and 2300 hours (96 days) of exposure to nickel rinse waters.

Because of an undetected leak in an oil seal in the high-pressure RO feed pump, oil leaked into the feed and fouled the module, causing the productivity to decrease to about one-half of its initial value. After the field test the module was opened, and the fiber bundle was inspected. There was no significant build-up of particulates, but the fibers were badly fouled with oil. Cleaning with a detergent solution completely removed the foulant and appeared to restore the fibers to their original condition. It is anticipated that in the absence of the oil leak very little loss in productivity would have occurred.

In general the rejections were high and quite stable for the duration of the field test. Nickel rejections were typically 99%; total solids, 97%; and conductivity, 95%. However, at the pH of the rinse, boric acid exists mainly in its unionized form which is poorly rejected by all membranes. The measured boric acid rejections ranged from about 50% to 90%. Platers should anticipate a build-up in the rinse of boric acid relative to other bath constituents when using RO for closed-loop treatment.

Since the capital and operating costs are similar for hollow-

fiber polyamide and spiral-wound cellulose acetate modules at the pH's encountered, the economics of closed-loop RO treatment of Watts-nickel rinse waters will be largely independent of the type of module (hollow fiber polyamide or spiral-wound cellulose acetate) used in the RO system.

Based on the results of numerous commercial installations and on the results of both laboratory and field tests, the economics of closed loop recovery of nickel rinse waters by reverse osmosis are generally attractive. Depending on certain factors specific to each plating line, the capital investment for a reverse osmosis system can be recovered in as little as one year or less of operation.

CONTENTS

		Page
FOREWORD		iii
ABSTRACT		iv
FIGURES		viii
TABLES		ix
ACKNOWLEDGMENT		x
I.	CONCLUSIONS	1
II.	RECOMMENDATIONS	2
III.	INTRODUCTION	3
IV.	EXPERIMENTAL	5
V.	RESULTS	10
VI.	DISCUSSION	22
VII.	REFERENCES	28

FIGURES

Number		Page
1	Flow Schematic for Field Test System	7
2	Corrected Productivity for Nickel Rinse Waters and Total Solids Feed Concentration vs. Operating time	13
3	Corrected Productivity for Sodium Chloride Tests vs. Operating Time	16
4	Rejection of Various Rinse Water Species vs. Operating Time	19
5	Corrected Sodium Chloride Rejection vs. Operating Time	21
6	Recommended RO System for Nickel Line at New England Plating Company	24

TABLES

Number		Page
1	Composition of Nickel Bath	6
2	Productivity and Rejection of Nickel Rinse Waters as a Function of Operating Time and Operating Conditions	11
3	Sodium Chloride Productivity and Rejection as a Function of Operating Time and Operating Conditions	15
4	Results of Spectrographic Analysis of Cleaning Solutions After Use	18
5	Breakdown of Operating Costs	26
6	Economics for Closed-Loop Nickel Recovery	27

ACKNOWLEDGMENT

The authors gratefully acknowledge the help and cooperation of Mr. Bruce Warner, President, New England Plating Co., Worcester, Massachusetts, who provided the field test site and support facilities for this program. Mr. Jerry Wheelock was responsible for the operation of the field-test system.

Direction was received throughout the program from the EPA Project Officer, Mr. John Ciancia, and from the AES Project Committee: Messers. Charles Levy (District Supervisor), Lawrence Greenberg (Committee Chairman), Arthur A. Brunell, Joseph Conoby, and Dr. Robert Mattair.

SECTION I
CONCLUSIONS

1. Because of an undetected oil leak, the RO module bacame badly fouled with oil, resulting in a decline in module productivity to about one-half of the initial value. Based on examination of the fiber bundle following the field test, very little decline in productivity would be anticipated in the absence of the oil leak.

2. In spite of severe module fouling, the rejection by the membrane of various dissolved species in the rinsewater was generally high and quite stable for the duration of the field test.

3. At the pH of the rinsewater boric acid exists mainly in the non-ionized form which is poorly rejected by all membranes. Boric acid will build up in the rinse system relative to other plating bath constituents when using RO for closed-loop treatment.

4. The economics of closed-loop RO treatment of Watts-nickel rinsewaters will be largely independent of whether hollow-fiber polyamide modules or spiral-wound cellulose acetate modules are used.

5. Based on the present field test, a previous field test [7] and numerous commercial installations (e.g., Ref. 5), closed-loop RO recovery of nickel rinsewaters can be highly attractive resulting in payback periods as low as one year.

SECTION II
RECOMMENDATIONS

1. On the basis of this field test, hollow-fiber polyamide membrane modules can be recommended as a viable alternative to spiral-wound cellulose acetate membrane modules for the treatment of Watts-type nickel rinse waters. Since the process economics are similar for these two modules, one of them cannot, on the basis of present information, be recommended over the other as being more cost effective.

2. Since the Watts-nickel application seems to be successful for both the cellulose acetate and polyamide membranes, future research and development should be devoted to high-volume baths which are more difficult to treat, such as zinc cyanide and chromic acid.

SECTION III
INTRODUCTION

It is apparent that many platers will have to severely reduce their output of pollutants in order to meet Federal effluent limitations guidelines. In determining the most cost-effective means of achieving compliance with discharge standards, platers should have available sufficient data to assess the relative merits of alternative treatment technologies. The overall objective of this research project is to provide information on the applicability of reverse osmosis (RO) to the treatment of metal finishing wastes.

To date, emphasis has been placed on closed-loop treatment of rinsewaters from specific plating baths. Pilot tests [1,2] have indicated that RO shows promise from the treatment of a number of different plating baths. Field tests are now being conducted to assess RO performance under realistic conditions. To date, two separate field tests have been conducted on copper cyanide rinse waters [3,4].

Nickel baths are generally regarded as being among the more favorable baths for RO treatment. The Watts-type nickel bath is considered a "general purpose" bath for nickel plating and is the most widely applied of all the nickel bath formulations. The primary constituents are nickel sulfate, nickel chloride, and boric acid. The bath pH is generally within the range fo 3-6 and the resulting rinsewaters are within a pH range that can be tolerated by both of the widely applied, commercially available membranes: cellulose acetate (pH 2.5-7) and aromatic polyamide (pH 4-11). The temperature of the Watts-nickel bath is generally within the range of 120-160°F resulting in significant bath evaporation. This is very important in achieving closed-loop recovery with RO. For plating lines where the ratio of bath evaporation to dragout is high, the rinsewater concentrate does not have to be highly concentrated in order to return it to the plating bath. However, if the ratio of bath evaporation to dragout is

low, the rinsewater concentrate must be concentrated to a degree beyond the capabilities of RO (because of osmotic pressure limitations), and an auxiliary concentration technique (e.g., evaporation) must be used to supplement RO. For the general operating temperature of Watts-nickel baths, closed-loop recovery can be achieved with RO alone unless the dragout is exceedingly high.

Although RO systems have been sold for closed-loop treatment of nickel rinsewaters, [5,6] details of the field results have not generally been made available. However, results have been reported[7] for a field test on Watts-type nickel rinsewaters using spiral-wound cellulose-acetate modules. The present field test investigates the applicability of the polyamide membrane in hollow fiber configuration to the treatment of Watts-type nickel rinsewaters.

Membrane module performance was evaluated by measuring the productivity and rejection as a function of operating time. Productivity is defined as the rate at which permeate (purified water) is produced by a module of specified size when operated under spedified conditions. The rejection is a measure of the degree to which dissolved species are prevented from passing through the membrane. Rejection is defined by the equation:

$$\text{Rejection} = \frac{C_F - C_P}{C_F} \times 100\%$$

where:

C_F = Concentration in feed to module.
C_P = Concentration in permeate from module.

Although this report describes the application of one specific membrane to one specific Watts-nickel plating bath, the results should be readily transferable to other Watts nickel baths and, with less certainty, to other baths of similar pH, temperature, and dissolved solids concentrations. The RO process can, in principle, be used to concentrate and recover a broad range of rinsewaters, but the economic feasibility depends on factors specific to the membrane, rinsewater, and plating operations.

SECTION IV
EXPERIMENTAL

PLATING LINE

Field tests were conducted on a Watts-type nickel bath at New England Plating Co., Worcester, Massachusetts. The nickel bath was part of an automatic rack nickel-chrome line used to plate a variety of small steel parts. The nickel tank was approximately 9,500 liters (2,500 gallons) in size and was followed by a three stage counter-current rinse. The evaporation rate from the bath was estimated at 22.7 liters per hour (6 gph). A typical dragout rate of 2.3 liters per hour (0.6 gph) was assumed for design purposes, but the actual dragout rate varied substantially depending on the size and shape of the parts. The nominal composition of the bath is given in Table 1.

RO SYSTEM

A flow schematic of the RO system is shown in Figure 1. Feed was pumped from the rinse tank by a booster pump and passed through a one-micron cartridge filter. The pressure of the filtered feed was increased to the desired operating pressure by a high-pressure, positive-displacement pump (Cat Pumps Corp., Model 01001). Pressure pulsations were dampened by an accumulator (ACC) on the pump discharge. The feed was separated into a concentrate stream and a permeate stream by a duPont B-9 Permasep® permeator (model 0440-042). The permeate stream from the RO module was returned directly to the rinse tank. The concentrate stream passed through a back-pressure regulator (BPR) which controlled the operating pressure in the module. Most of the concentrate stream was recycled to the suction of the high-pressure pump to maintain a sufficiently high flow through the module. A float valve operating off the bath level returned concentrate to the bath as needed to compensate for evaporation. Deionized water was added to the rinse tank

Table 1. COMPOSITION OF NICKEL BATH

Constituent	Concentration
Total Nickel	82 g/l (11 oz/gal)
Nickel Sulfate $\cdot 6\ H_2O$	255 g/l (34 oz/gal)
Nickel Chloride $\cdot 6\ H_2O$	105 g/l (14 oz/gal)
Boric Acid	45 g/l (5 oz/gal)
Brightener	not analyzed
pH	4.3
Temperature	60°C (140°F)
Purification	Continuous filtration

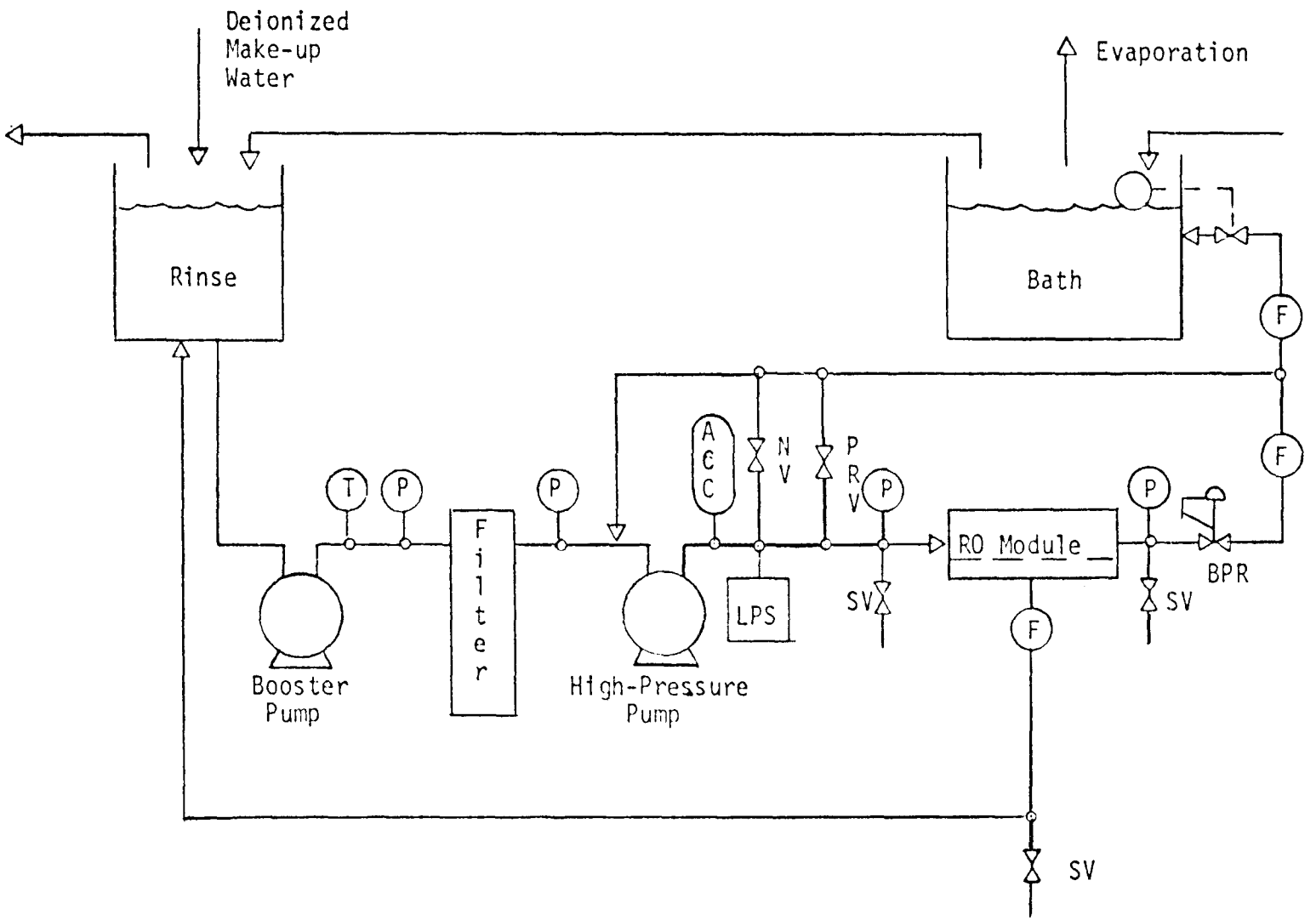

Figure 1. Flow schematic for field test system

to compensate for concentrate returned to the bath.

The feed flow rate to the module was set (NV) at about 15 liters per minute (4 gpm) for the duration of the field test. The permeate and total concentrate flow rates were measured (F), and samples of the feed, concentrate, and permeate were obtained (SV) for analysis.

Pressures were measured (P) before and after the filter to determine when the cartridge should be replaced and before and after the RO module to determine the operating pressure and pressure drop. The system was protected against overpressurization by a pressure relief valve (PRV) and the pump was protected against running dry by a low pressure switch (LPS). The temperature (T) of the feed was also measured.

In addition to operating the unit in the normal mode shown in Figure 1, periodic tests were conducted with a standard 1500 ppm NaCl solution at fixed conditions. For these tests, the plating solution was flushed from the RO system and NaCl feed solution was withdrawn from an auxiliary feed tank. The permeate and concentrate streams were returned to the feed tank. When steady state was reached, feed and permeate samples were analyzed for conductivity and the productivity was measured.

OPERATING CONDITIONS

The RO module was operated at its maximum recommended pressure of 28.6 bars absolute (400 psig) since both the flux and rejection increase as the operating pressure increases. The module conversion, defined as the ratio of permeate flow to feed flow, varied from 20% to 76%. Experimentally the feed flow was set at about 15 liters per minute (4 gpm) and the conversion was allowed to vary with the module productivity. The feed concentration to the module varied depending

on the amount of dragout from the bath to the rinse. The temperature varied between 8°C and 33°C.

For the standard NaCl tests, conditions were controlled at 28.6 bars absolute (400 psig), 75% conversion, 1500 ppm feed concentration, and 25°C.

ASSAYS

Samples were analyzed for nickel (atomic absorption), boric acid (NaOH titration of mannitol complex), total solids (evaporation-gravimetric), pH (meter), and conductivity (meter).

SECTION V
RESULTS

MODULE PRODUCTIVITY

The productivity of a module is important in determining the capital cost of an RO system. The higher the productivity, the fewer the number of modules required, and the lower the capital cost.

Productivity depends on the operating pressure, the feed concentration to the module, the conversion at which the module is operated, and the temperature. Corrections for variations in operating pressure were negligible since the module was always operated at or near 28.6 bars (400 psig). The feed concentration and conversion varied substantially, but accurate correction factors for nickel rinse waters are not available. Therefore, the data were not corrected to a specific feed concentration and conversion. All productivity data were corrected to a temperature of 25°C using the correction factors given in the duPont Technical Information Manual.

The measured and corrected productivities are given in Table 2 as a function of operating time and operating conditions. The corrected productivity is plotted as a function of operating time in Figure 2. The total solids concentration in the feed to the module is also shown.

The minimum in the productivity curve near 150 hours is the result of the high solids concentration in the feed over the same time period. The high feed concentration results in a high osmotic pressure on the feed side of the membrane and reduces the effective driving force for water permeation [8]. After about 300 hours, the feed concentration did not vary excessively, and, as a result, the change in productivity was much more gradual. If the feed concen-

Table 2. PRODUCTIVITY AND REJECTION OF NICKEL RINSE WATERS AS A FUNCTION OF OPERATING TIME AND OPERATING CONDITIONS

Cumulative Operating Time, hrs.	Feed Pressure, Bars abs.* (psig)		Module ΔP Bars abs.* (psig)		Conversion, %	Temperature, °C (°F)		Measured Flux, lpm (gpm)		Corrected Flux** lpm (gpm)		Nickel Conc., mg/l Feed	Nickel Conc., mg/l Perm	Boric Acid Conc., mg/l Feed	Boric Acid Conc., mg/l Perm.
0.5	28.6	(400)	1.7	(25)	64	13.9	(57)	9.42	(2.49)	13.78	(3.64)	-----	-----	-----	-----
24	28.6	(400)	1.7	(25)	76	20.6	(69)	7.11	(1.88)	8.29	(2.19)	34,000	136	646	434
97	28.9	(405)	2.1	(30)	26	33.3	(92)	3.97	(1.05)	3.03	(0.80)	12,800	256	3,407	1,267
190	28.6	(400)	2.4	(35)	20	22.8	(73)	3.03	(0.80)	3.26	(0.86)	16,000	212	4,860	555
260	27.2	(380)	2.4	(35)	28	21.1	(70)	4.16	(1.10)	4.77	(1.26)	2,250	11	520	148
294	28.6	(400)	2.1	(30)	29	14.4	(58)	4.35	(1.15)	6.24	(1.65)	3,000	34	631	186
328	28.6	(400)	2.4	(35)	69	12.8	(55)	4.69	(1.24)	7.11	(1.88)	2,000	18	478	153
NOTE A															
494	29.3	(410)	2.8	(40)	38	31.1	(88)	6.43	(1.70)	5.22	(1.38)	2,600	35	638	267
653	28.6	(400)	3.4	(50)	34	31.1	(88)	6.21	(1.64)	5.03	(1.33)	4,600	30	1,130	547
NOTE B															
797	28.6	(400)	4.1	(60)	25	13.3	(56)	3.71	(0.98)	5.53	(1.46)	2,350	28	513	208
984	28.9	(405)	4.8	(70)	22	9.4	(49)	3.33	(0.88)	5.64	(1.49)	2,300	16	622	160
NOTE C															
1,114	28.6	(400)	4.5	(65)	23	8.3	(47)	3.48	(0.92)	6.09	(1.61)	1,900	12	2.55	56
NOTE D															
NOTE E															
1,190	28.2	(395)	4.8	(70)	28	16.1	(61)	4.24	(1.12)	5.71	(1.51)	1,860	8.7	403	148

* One Bar = 10^5 N/m^2 = 14.50 psi = 0.987 atm

** Flux corrected to 77°F

NOTES:

A - Module cleaned with 2% citric acid adjusted to pH 4 with NH_4OH.

B - Module cleaned with 2% citric acid adjusted to pH 8 with NH_4OH

C - Module cleaned with NaOH solution at pH 12

D - Module cleaned with 2% citric acid adjusted to pH 8 with NH_4OH

E - Module cleaned with 1.5% Na_2EDTA adjusted to pH 8 with NaOH

Table 2 (continued). PRODUCTIVITY AND REJECTION OF NICKEL RINSE WATERS AS A FUNCTION OF OPERATING TIME AND OPERATING CONDITIONS

Cumulative Operating Time hrs.	Tot. Solids Concentration mg/l		Conductivity µmhos/cm			pH			Nickel Rejection, %	Boric Acid Rejection, %	Total Solids Rejection %	Conductivity Rejection %
	Feed	Perm.	Feed	Perm.	Conc.	Feed	Perm	Conc.				
0.5	------	------	1,400	63	-----	---	---	---	---	---	---	95.5
24	17,240	1,268	10,500	>1,000	-----	3.5	4.0	2.8	99.6	33	92.6	---
97	71,000	2,908	25,000	>1,000	-----	3.5	4.3	3.4	98.0	63	95.9	---
190	70,560	1,868	27.500	>1,000	-----	3.1	3.7	3.0	98.7	88	97.3	---
260	7,768	273	6,000	245	-----	3.3	3.5	---	99.5	72	96.5	95.9
294	20,972	350	13,500	500	-----	3.2	6.4	3.1	98.9	70	98.3	96.3
328	11,580	272	7,750	325	-----	3.3	3.9	3.1	99.1	68	97.6	95.8
NOTE A												
494	34,800	452	7,200	495	12,600	3.4	4.0	3.2	98.6	58	98.7	93.1
653	14,653	564	7,600	545	12,700	3.5	4.1	3.4	99.3	52	96.2	92.8
NOTE B												
797	12,350	373	7,150	445	11,400	3.1	3.8	3.0	98.8	59	97.0	93.8
984	9,195	156	5,700	240	7,500	3.1	4.0	2.9	99.3	74	98.3	95.8
NOTE C												
1114	8,598	140	5,600	190	7,400	3.0	4.2	3.0	99.4	78	98.4	96.6
NOTE D												
NOTE E												
1,190	10,192	285	6,800	340	9,600	3.6	4.6	3.5	99.5	63	97.2	95.0

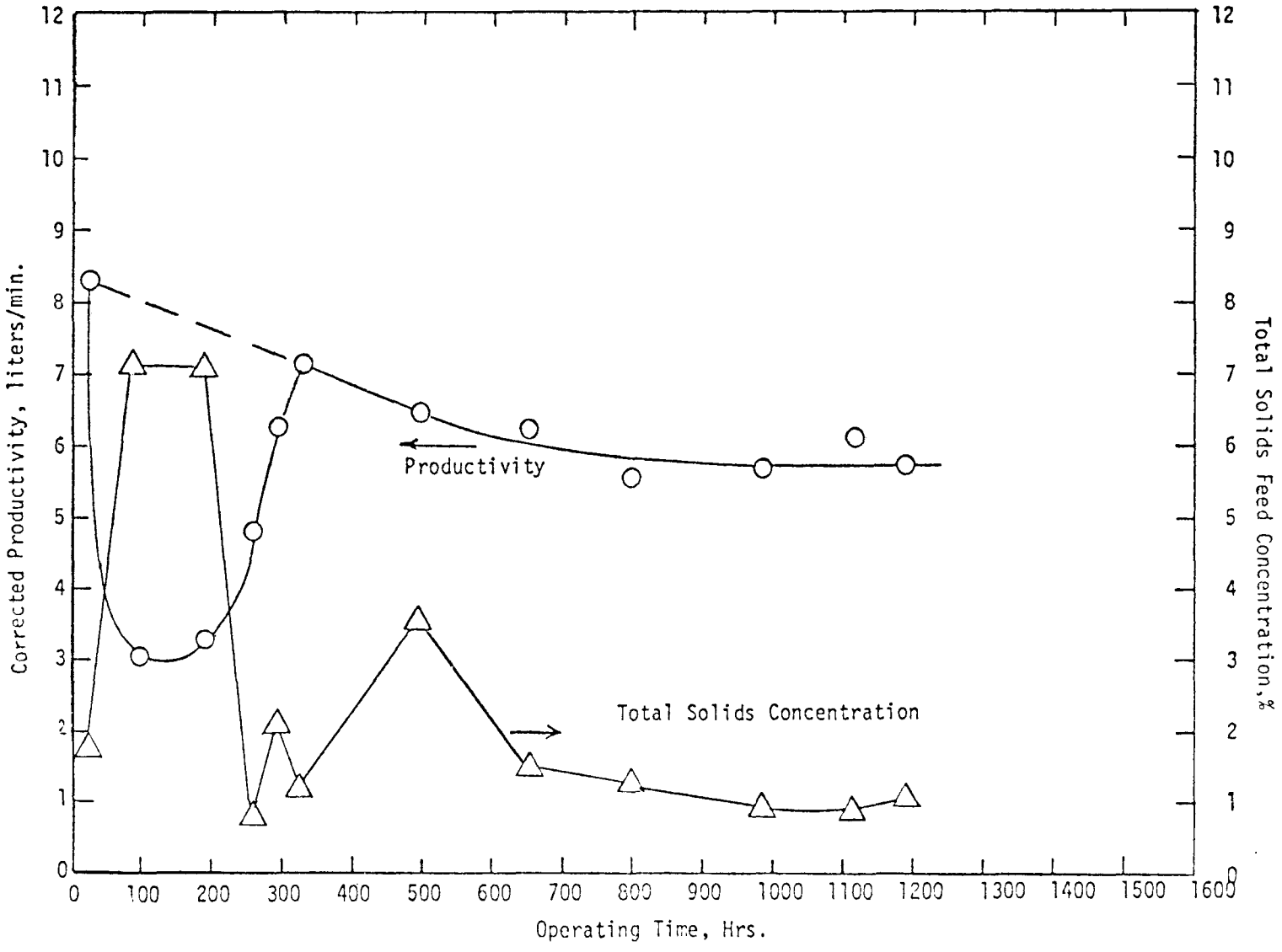

Figure 2. Corrected productivity for nickel rinse waters and total solids feed concentration vs. operating time

tration during the first 300 hours had remained at about 2% solids, it is likely that the productivity vs. time curve would have followed the dashed line rather than the solid line over this time period. It can be concluded that, at a given feed concentration, the productivity declines with operating time. After 300 hours of operating time, this module was periodically flushed with cleaning solutions (to be detailed later) in an effort to restore the original productivity. While the cleanings were successful in arresting the decline, they were unsuccessful in restoring the original productivity.

Because the feed concentration is an uncontrolled variable, it is difficult to get an accurate indication of the dependence of productivity on operating time. The standard NaCl performance tests give a more accurate picture. Table 3 gives the productivity during the NaCl tests as a function of test conditions and cumulative operating time on nickel rinse waters. The corrected productivity during the NaCl tests is shown in Figure 3 as a function of operating time. The productivity declined rapidly over the first 300 hours. The cleaning solutions shown in Figure 3 were used at the indicated times in an effort to recover the productivity. Standard NaCl tests were conducted before and after each cleaning. The cleaning generally consisted of flushing the module for two hours with about 38 liters (10 gallons) of the indicated solution. Each cleaning produced only a slight recovery in productivity.

The solutions used were recommended by duPont for the removal of common foulants:

Solution	Foulants Removed
A	Hydrated metal oxides
	Calcium carbonate
	Inorganic colloids
B,D,E,F	Calcium sulfate
	Calcium phosphate
	Inorganic colloids

Table 3. SODIUM CHLORIDE PRODUCTIVITY AND REJECTION AS A FUNCTION OF OPERATING TIME AND OPERATING CONDITIONS

Cumulative Operating Time, hrs.	Feed Pressure, Bars abs.* (psig)		Module ΔP, Bars abs.* (psig)		Conversion, %	Temperature °C (°F)		Measured Flux, lpm (gpm)		Corrected Flux,** lpm (gpm)		Concentration µmhos/cm Feed	Perm	Corrected Rejection*** %
0	26.9	(375)	2.1	(30)	77	29.4	(85)	12.45	(3.29)	11.54	(3.05)	3000	340	88.6
21	28.2	(395)	1.7	(25)	78	23.3	(74)	10.93	(2.90)	11.92	(3.15)	2750	290	89.4
52	28.2	(395)	1.7	(25)	77	30.6	(87)	10.07	(2.66)	8.52	(2.25)	2850	240	91.6
101	27.6	(390)	1.7	(25)	76	13.3	(55)	6.70	(1.77)	8.74	(2.31)	3050	210	93.1
193	28.2	(395)	1.7	(25)	73	25.0	(77)	7.39	(1.95)	7.53	(1.99)	2475	176	92.9
292	28.6	(400)	2.1	(30)	74	25.0	(77)	7.00	(1.85)	7.08	(1.87)	3050	205	93.3
329	28.2	(395)	1.7	(25)	73	25.0	(77)	6.93	(1.83)	7.08	(1.87)	3000	190	93.7
Module cleaned with 2% citric acid adjusted to pH 4 with NH_4OH														
329	28.6	(400)	1.7	(25)	74	25.0	(77)	7.15	(1.89)	7.15	(1.89)	3000	162	94.6
496	28.2	(395)	2.1	(30)	74	25.0	(77)	6.21	(1.64)	6.40	(1.69)	3000	200	93.3
654	28.2	(395)	2.4	(35)	74	25.6	(78)	5.98	(1.58)	6.06	(1.60)	2950	210	92.9
Module cleaned with 2% citric acid adjusted to pH 8 with NH_4OH														
661	28.2	(395)	2.4	(35)	75	26.1	(79)	6.66	(1.76)	6.58	(1.74)	2900	180	93.8
799	28.9	(405)	3.0	(43)	75	25.6	(78)	6.02	(1.59)	6.02	(1.59)	3000	235	92.2
935	28.6	(400)	3.4	(50)	73	25.6	(78)	5.60	(1.48)	5.68	(1.50)	2900	210	92.8
Module cleaned with NaOH soln. at pH 12														
988	28.6	(400)	3.1	(45)	75	25.0	(77)	5.98	(1.58)	6.17	(1.63)	3050	138	95.5
1115	28.6	(400)	3.8	(55)	75	24.4	(76)	5.41	(1.43)	5.75	(1.52)	3000	205	93.2
Module cleaned with 2% citric acid adjusted to pH 8 with NH_4OH														
1118	28.9	(405)	3.4	(50)	74	24.4	(76)	6.13	(1.62)	6.32	(1.67)	3000	160	94.7
1184	28.2	(395)	3.8	(55)	73	25.0	(77)	5.56	(1.47)	5.90	(1.56)	3050	205	93.7
Module cleaned with 1.5% Na_2 EDTA adjusted to pH 8 with NaOH														
1188	28.2	(395)	3.8	(55)	76	26.1	(79)	6.13	(1.62)	6.28	(1.66)	3000	165	94.5
1352	28.6	(400)	4.8	(70)	72	25.0	(77)	5.12	(1.35)	5.45	(1.44)	3000	210	93.0
Module cleaned with 1.5% Na_2 EDTA and 2% citric acid adjusted to pH 4 with NH_4OH														
1356	28.6	(400)	4.5	(65)	72	25.0	(77)	5.41	(1.43)	5.75	(1.52)	2050	140	95.4
1601	28.9	(405)	5.9	(85)	71	24.4	(76)	4.47	(1.18)	4.92	(1.30)	3000	320	89.3

* One Bar = $10^5 N/m^2$ = 14.50 psi = 0.987 atm

** Flux corrected to 400 psi, 77°F, 75% conversion, and 2925 µmhos/cm (1500 ppm)

*** Rejection corrected to 400 psi, 77°F, 75% conversion, and 2925 µmhos/cm (1500 ppm)

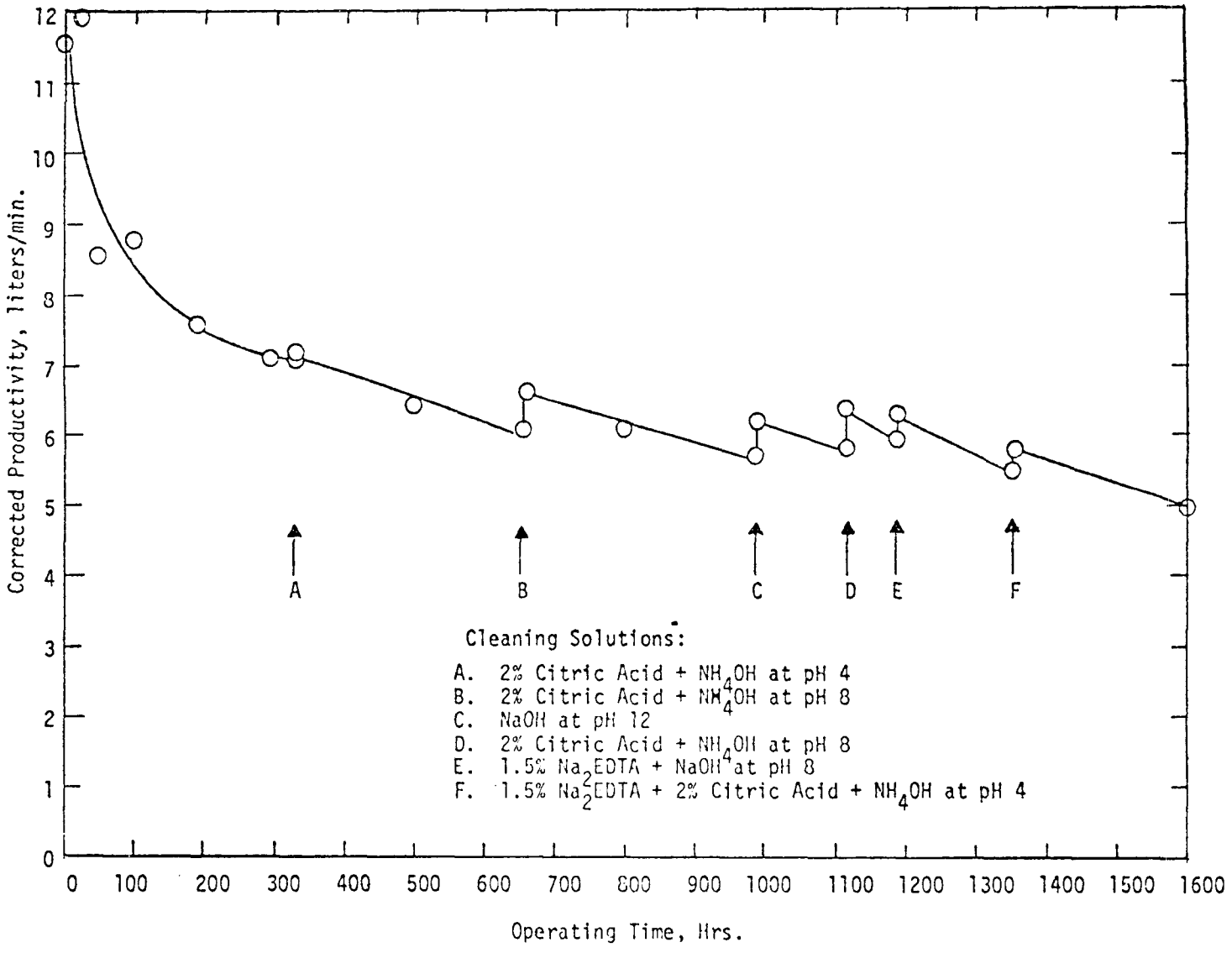

Figure 3. Corrected productivity for sodium chloride tests vs. operating time

Significant color changes were noted during flushing with each of the cleaning solutions. Samples of the cleaning solutions were obtained toward the end of the flushing period for the last three cleaning solutions (D, E, and F), and spectrographic analyses were conducted for thirty different elements. The results are shown in Table 4. The cleaning solutions do not appear to contain large amounts of any precipitate-forming elements. This is consistent with the observation that the cleaning solutions used were ineffective in restoring the original productivity.

MODULE REJECTION

The rejection of a module is also important in determining the capital cost of an RO system. If the rejection is low, additional treatment of the permeate may be required in order to achieve the desired rinse purity.

Rejection increases with operating pressure but decreases as the feed concentration and conversion increase. Rejection is essentially independent of temperature. Since the operating pressure was maintained at or near the maximum recommended value, corrections for variations in operating pressure were negligible. Although the feed concentration varied substantially, correction factors for feed concentration and conversion are not available for nickel rinse waters. Therefore, no corrections were applied to the measured rejections.

The rejections given in Table 2 for nickel, total solids, conductivity, and boric acid are plotted as a function of operating time in Figure 4. Nickel rejections were excellent (generally >99%), and total solids and conductivity rejections very good. Boric acid rejection was poor since at low pH it exists mainly in the unionized form which is poorly rejected by all membranes. These rejections are consistent with those measured previously for nickel baths[1,2,7,9].

Table 4. RESULTS OF SPECTROGRAPHIC ANALYSIS OF CLEANING SOLUTIONS AFTER USE

Element	Concentration, mg/l		
	Solution D	Solution E	Solution F
Ag	<0.05	<0.05	<0.05
Al	1	1	1
As	<0.5	<0.5	<0.5
Ba	2	20	2
Be	<0.1	<0.1	<0.1
C	20	10	50
Ca	20	100	50
Cd	0.5	0.5	0.5
Co	1	2	2
Cr	1	0.5	0.5
Cu	5	10	5
Fe	5	20	10
K	<0.5	<0.5	<0.5
Me	20	10	10
Mn	1	1	1
Na	20	1000	200
Ni	25	25	25
Pb	1	10	5
P	1	5	10
Si	5	10	5
Sn	1	5	2
Sr	10	10	10
V	<0.1	<0.1	<0.1
Zn	<0.5	0.5	2

NOTE: Analyses conducted by Elliott Laboratories Inc., Andover, Massachusetts. The spectra were also examined for the presence of Sb, Hg, Se, B, Ta, and Ti--no indication was seen.

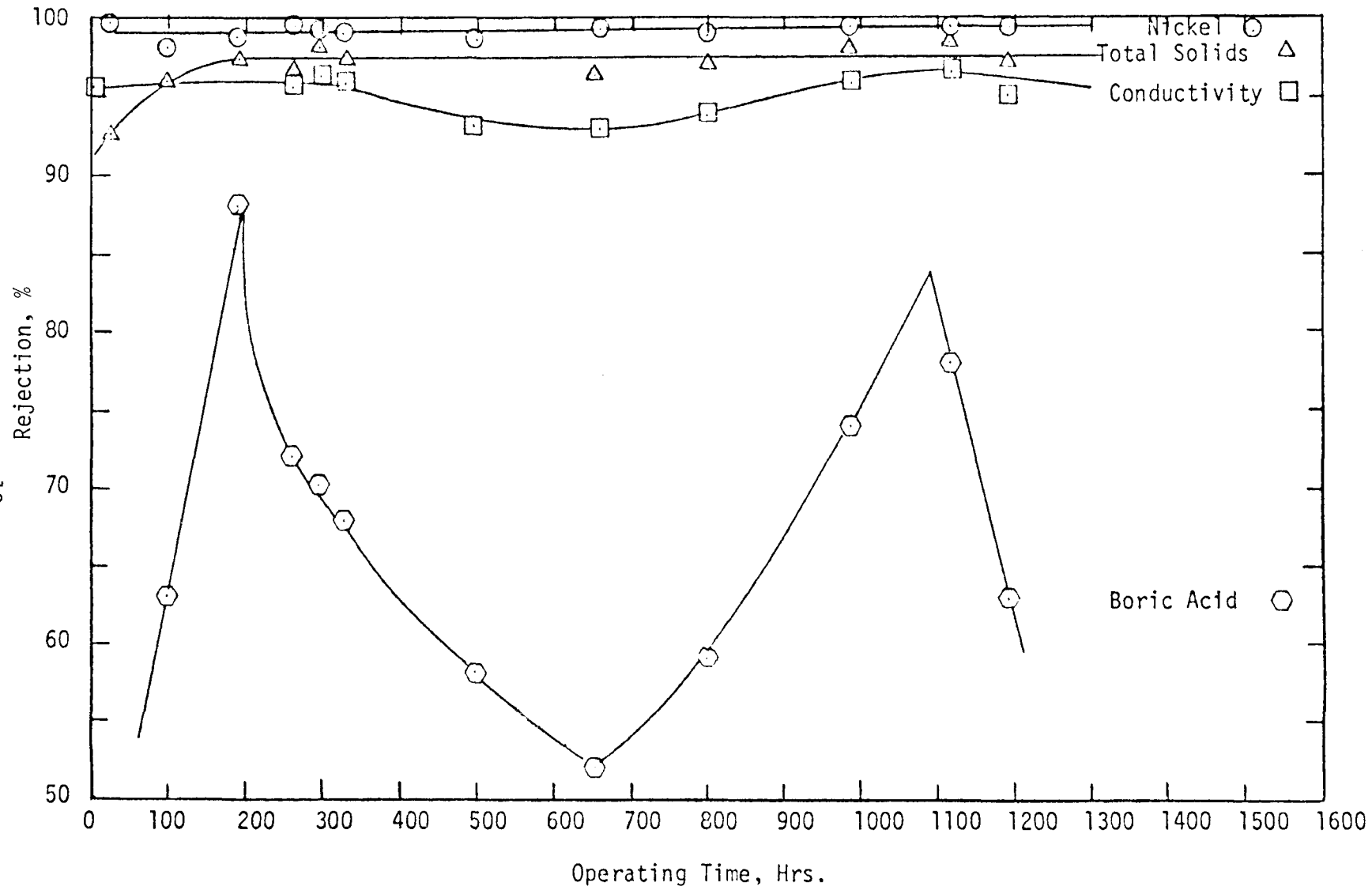

Figure 4. Rejection of various rinse water species vs. operating time

It is significant to note that no decline in rejection occurred over the duration of the field test. The high variability of the boric acid rejection does not appear to be related to the concentration, the pH or the operating time.

The rejection of NaCl during standard NaCl tests is given in Table 3 and plotted in Figure 5 as a function of operating time on nickel rinse waters. Upon exposure to plating solution, there was a significant increase in rejection (from 88.5% to 93.5%). For the duration of the field test, the rejection remained above its initial value. The cleaning solutions produced a slight but consistent increase in rejection.

DESTRUCTIVE TESTS

At the conclusion of the field test, the hollow fiber module was opened and the fiber bundle was inspected to determine the cause of deterioration in membrane productivity. Except for a very small amount of solid particulates in the vicinity of the feed distributor tube, the fiber bundle was entirely free of particulates. However, the fibers were discolored. The clean fiber has a light yellowish-beige or buff color about the same tone as a manila folder. The fibers from the field-test module had a dark green-brown color similar to drab "Army" green. In addition, the fibers were very oily to the touch.

Several strands of the fibers were washed in a detergent solution. This resulted in complete removal of the oily foulant and total restoration of the original fiber color.

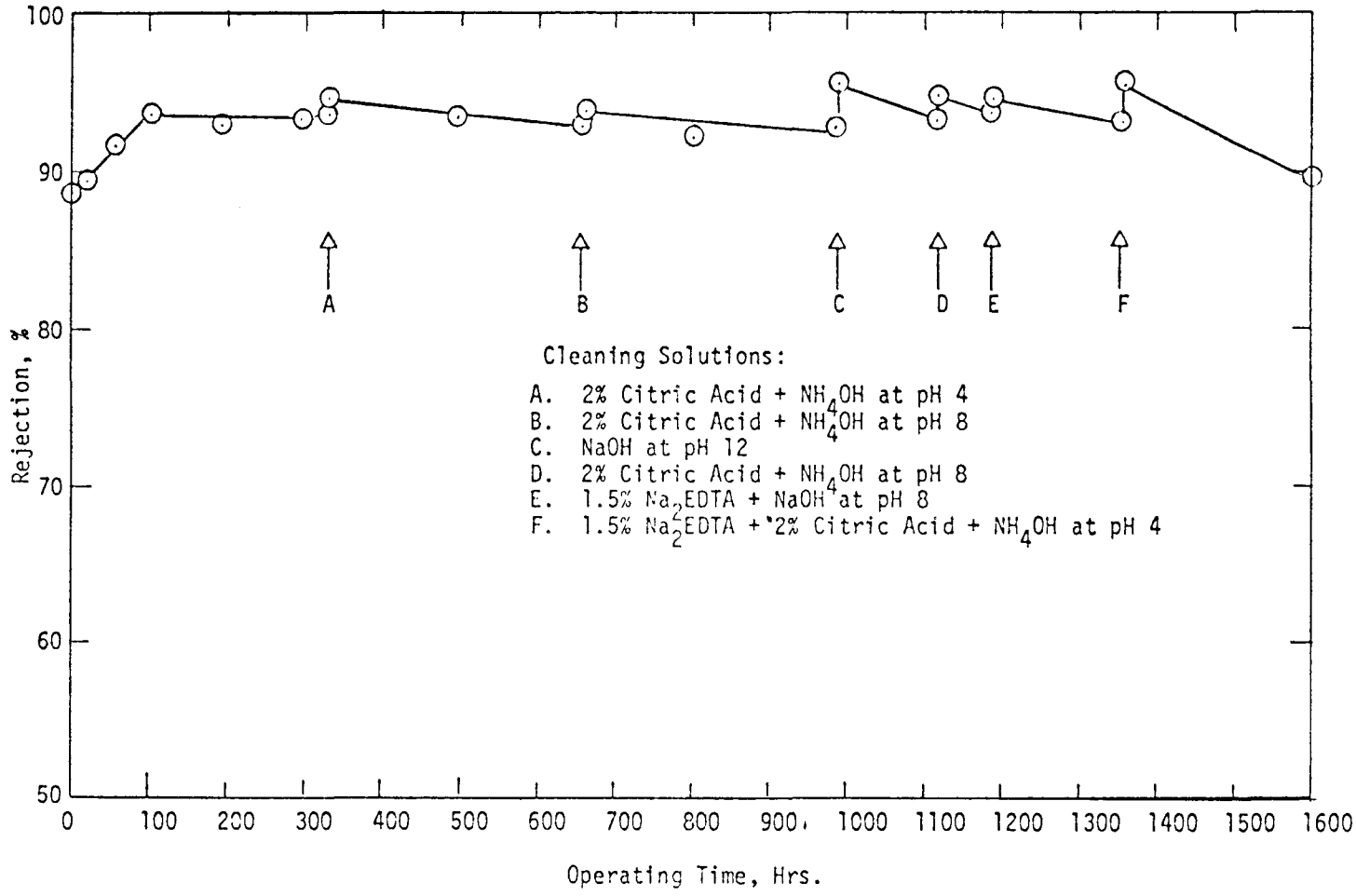

Figure 5. Corrected sodium chloride rejection vs. operating time

SECTION VI
DISCUSSION

The most likely origin of the oily foulant observed during destructive examination of the module is the high-pressure piston pump used to pressurize the feed to the RO system. There was no oil slick on the rinse from which the RO feed was drawn, so the oil must have come from RO system itself. Since the high-pressure pump is the only oil-lubricated pump in the system, it is concluded that this pump developed a leak in the piston-rod oil seal and allowed oil to enter the feed manifold.

The build-up of lubricating oil within the module was completely unexpected. Therefore, the cleaning solution for organics removal (0.5 wt% "Biz" at pH 10) was not attempted. Based on the success of the detergent cleaning (Alconox solution) during destructive examination of the module, it is anticipated that a detergent cleaning during the field test would have been much more successful in restoring the original flux than the cleaning solutions actually used.

Destructive examination of the RO module indicated no significant build-up of solid particulates within the module. It is therefore concluded that the feed pretreatment employed (filtration through a one-micron, string-wound, catridge filter) is adequate for this application. The fact that the module became fouled with oil is a consequence of the pump malfunction rather than an inadequacy in feed pretreatment.

Even though the module was badly fouled with oil, the rejections (with the exception of boric acid) were very high and quite stable with operating time. In the absence of oil fouling, it is anticipated that the productivity would also have been quite stable. Therefore, it is concluded that hollow-fiber polyamide B-9 permeators can be successfully used for closed-loop treatment of Watts-type nickel baths. Since the cost per unit volume of permeate is the same of spiral-wound and hollow-fiber modules, the economics will be similar to the economics reported for spiral-wound cellulose acetate modules [7].

The low rejection of boric acid has been noted previously (1,2,7,9,10) in work on RO treatment of nickel baths. The low rejection will result in a build-up of boric acid in the rinses to a relatively high level compared to other plating bath constituents. The effect of boric acid on subsequent processing steps should be given careful consideration by platers comtemplating the use of RO for treatment of nickel rinse waters. The concentration of boric acid in the final rinse can be minimized by returing the RO permeate to the first rinse rather than the final rinse.

The recommended flow schematic for RO treatment of Watts-nickel rinsewater at New England Plating Company is shown in Figure 6. The estimated bath evaporation and dragout are 0.3785 liters per minute (0.1 gpm) and 0.03785 liters per minute (0.01 gpm), respectively. Based on the bath composition given in Table 1, the total solids concentration of the bath is approximately 280,000 mg/ℓ. The recommended total solids concentration for the final rinse following mickel plating in 37 mg/ℓ (11). Based on these values the concentration in the first and second rinse tanks can be calculated and the required capacity of the RO system can be specified.

The flows and concentrations resulting from material balance calculations are shown in Figure 6. The system is designed to operate at a maximum conversion per module of 50%. Based on the results of Figure 4 a minimum total solids rejection of 96% was assumed. However, because of oil-fouling of the RO module during the field test, the extrapolated productivity results were not used. Instead, the initial productivity shown in Figure 2 (8 liters/min = 2.1 gpm) was used and extrapolated to longer operating times using factors published in the DuPont Technical Information Manual for B-9 modules. The extrapolated productivity for a full-scale 4-inch diameter module after two years of operation is 5.7 liters/min (1.5 gpm). A total of three full-scale, four-inch-diameter, B-9 modules are required in order to achieve the rinse concentrations shown in Figure 6.

Based on costs from Abcor, Inc. (March, 1977) the installed capital cost for this system, including pretreatment (cartridge filtration), controls, stainless steel construction, and RO modules is approximately $15,000.

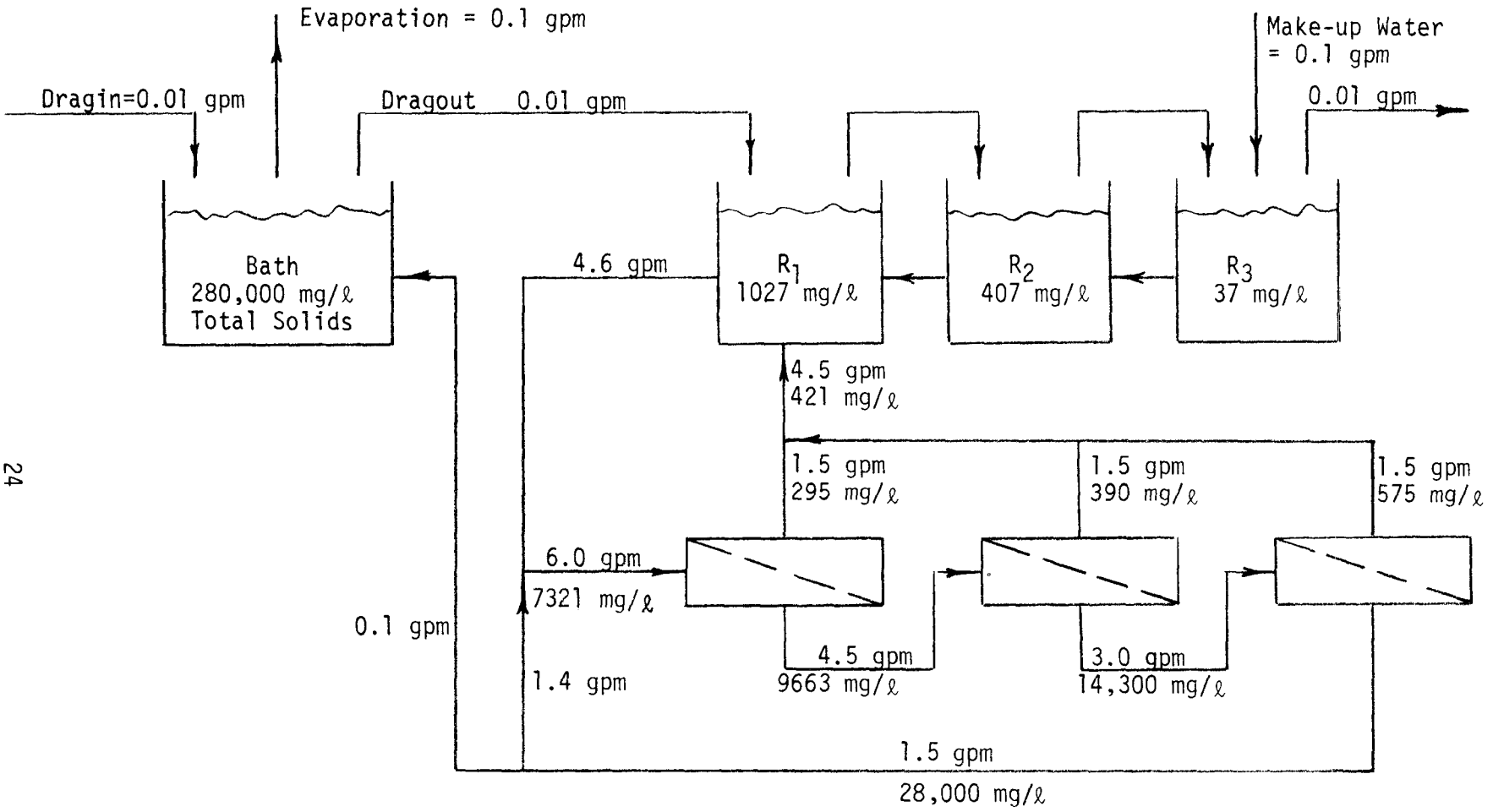

NOTE: 1 gpm = 3.785 liters/min

Figure 6. Recommended RO system for nickel line at New England Plating Company

Table 5 gives a breakdown of projected operating costs for the system based on operation for one shift per day and 240 days per year. The major costs are for membrane module replacement and system depreciation. Although the data of Figure 4 shows no decline in rejection, a module life of two years was assumed on the basis of commercial experience with the cellulose acetate membrane for treatment of Watts-nickel rinsewaters. The annual operating cost for the system is approximately $4000.

Several credits can be claimed as a result of closed-loop rinsewater recovery: first, the cost of recovered nickel-plating-bath constituents; and second, the cost for end-of-pipe treatment of nickel rinsewater including the chemical costs for precipitation and the sludge disposal costs. These credits can be applied toward the operating cost, and if greater than the operating cost, will result in a profit for operation of the RO system.

Various economic factors for the closed-loop recovery of nickel rinsewater at New England Plating Company are shown in Table 6. For operation of the nickel line one shift per day, the costs and credits (which here include only the value of recovered plating chemicals) are approximately equal and the payback period (8.1 years) is only slightly less than the period over which the capital investment is amortized (10 years). However, if the nickel line is operated two shifts or three shifts per day the credits increase by a factor of 2 or 3, respectively while the operating cost increases only slightly. Thus the payback periods for 2-shift or 3-shift operation (2.4 years and 1.4 years, respectively) are quite attractive.

Table 5. BREAKDOWN OF OPERATING COSTS (1 Shift/Day, 240 Days/Year)

1. Power (at $.05/kwh)

   Major power requirement is for high pressure pump

   Flow rate = 6.0 gpm; ΔP = 400 psi; motor/pump efficiency = 50%;

   conversion factor = 1715 gpm-psi/hp

   $$\text{Power consumed} = \frac{(6.0)\ (400)}{(1715)\ (.50)} = 2.80 \text{ hp} = 2.08 \text{ kw}$$

   Annual Operation Cost = (2.08)(8)(240)($.05) = $200

2. Module Replacement (at $1317 per module)

   For a module life of 2 years:

   $$\text{Annual Operating Cost} = \frac{(3)\ (\$1317)}{(2)} = \$1976$$

3. System maintenance (3% of capital investment per year)

   Annual maintenance cost = (.03) ($15,000) = $450

4. Amortization

   For straight-line depreciation over ten years

   with zero salvage value:

   $$\text{Annual Operating Cost} = \frac{(\$15{,}000)}{10} = \$1{,}500$$

5. Make-up Water (at $4.00 per 1000 gal from central DI system)

   $$\text{Annual Operating Cost} = \frac{(0.1)\ (60)\ (8)\ (240)\ (\$4.00)}{1000} = \$46.08$$

6. TOTAL ANNUAL OPERATING COST = $4,172

Table 6. ECONOMICS FOR CLOSED-LOOP NICKEL RECOVERY

Annual Cost Elements	1 Shift Per Day	2 Shifts Per Day	3 Shifts Per Day
Credit for Recovered Chemicals[a]	$4,516	$9,032	$13,548
Cost for RO Operation[b]	4,172	4,418	4,664
Profit for RO Operation[c]	344	4,714	8,884
Minimum Payback Period[d]	8.1 years	2.4 years	1.4 years

(a) Calculated on the basis of 0.03785 liters per minute (0.01 gpm) dragout and $1.03/liter ($3.92/gal) cost for plating chemicals (M&T Chemicals, March 1977). Does not include credits for reduction in volume and concentration of wastewaters to be disposed.

(b) Calculated as in Table 5 but with additional charges for power and DI water for 2 and 3-Shift operation.

(c) Profits before taxes = credits minus costs

(d) Capital cost divided by the sum of annual profits and depreciation charges.

SECTION VII

REFERENCES

1. Donnelly, R. G., Goldsmith, R. L., McNulty, K. J., and Tan, M. Plating, 61 (5), 432 (1974).

2. Donnelly, R. G., Goldsmith, R. L., McNulty, K. J., Grant, D. C., and Tan, M., "Treatment of Electroplating Wastes by Reverse Osmosis", Final Report EPA Contract No. R-800945-01. In Press.

3. McNulty, K. J., Goldsmith, R. L., Gollan, A., Hossain, S., and Grant, D., "Reverse Osmosis Field Test: Treatment of Copper Cyanide Rinse Waters", Final Report, EPA Grant No. 800945. In press.

4. McNulty, K. J., Grant, D. C., Gollan, A., and Goldsmith, R. L., "Field Demonstration of Reverse Osmosis Treatment of Cyanide Rinse Water", presented at the AES 62nd Technical Conference, Toronto, June 23-26, 1975.

5. Mattair, R., "Case Histories of Hollow Fiber Reverse Osmosis Plants", presented at the 79th National Meeting of the AICHE, Houston, Texas (March 18, 1975).

6. Anon., Industrial Finishing, 50 (7), 34 (1974).

7. Golomb, A., Plating, 60 (5), 482 (1973).

8. Lonsdale, H. K., "Properties of Cellulose Acetate Membranes", in Desalination by Reverse Osmosis, U. Merten ed., The M.I.T. Press, Cambridge, Mass. (1966).

9. Golomb, A., Plating, 57 (9), 1001 (1970).

10. Golomb, A., Plating, 59 (4), 316 (1972).

11. Novotny, C. J. Finishers' Management, 18 (2), 43 (1973).

TECHNICAL REPORT DATA
(Please read Instructions on the reverse before completing)

1. REPORT NO. EPA-600/2-77-039	2.	3. RECIPIENT'S ACCESSION NO.
4. TITLE AND SUBTITLE REVERSE OSMOSIS FIELD TEST: TREATMENT OF WATTS NICKEL RINSE WATERS		5. REPORT DATE February 1977 issuing date 6. PERFORMING ORGANIZATION CODE
7. AUTHOR(S) Kenneth J. McNulty, Robert L. Goldsmith, Arve Z. Gollan, Walden Research Division of Abcor, Inc., Wilmington, Massachusetts 01887		8. PERFORMING ORGANIZATION REPORT NO.
9. PERFORMING ORGANIZATION NAME AND ADDRESS The American Electroplater's Society, Inc. Winter Park, Florida 32789		10. PROGRAM ELEMENT NO. 1 BB610 11. CONTRACT/GRANT NO. R-803753
12. SPONSORING AGENCY NAME AND ADDRESS Industrial Environmental Research Laboratory-Cin., OH Office of Research and Development U.S. Environmental Protection Agency Cincinnati, Ohio 45268		13. TYPE OF REPORT AND PERIOD COVERED Final 14. SPONSORING AGENCY CODE EPA/600/12

15. SUPPLEMENTARY NOTES

16. ABSTRACT

A field test was conducted to determine the feasibility of using a polyamide reverse-osmosis membrane in hollow fine fiber configuration for closed-loop treatment of rinse water from a Watts-type nickel bath. Performance of the membrane module was determined by measuring the productivity (flow rate of purified water) and rejection (separation efficiency) as a function of operating time. Performance was monitored over 1600 hours (67 days) of operation and 2300 hours (96 days) of exposure to nickel rinse waters.

The results of the tests combined with the results from numerous commercial installations indicate that the economics of closed-loop recovery of nickel rinse waters by reverse osmosis are generally attractive. Depending on certain factors specific to each plating line, the capital investment for a reverse osmosis system can be recovered in as little as one year or less of operation.

17. KEY WORDS AND DOCUMENT ANALYSIS

a. DESCRIPTORS	b. IDENTIFIERS/OPEN ENDED TERMS	c. COSATI Field/Group
Electroplating*, Waste Treatment, Reverse Osmosis*, Nickel*, Rinse water	Closed-loop treatment*, polyamide hollow fiber membrane*, Watts-type nickel bath*	13B

18. DISTRIBUTION STATEMENT Release to Public	19. SECURITY CLASS *(This Report)* Unclassified	21. NO. OF PAGES 39
	20. SECURITY CLASS *(This page)* Unclassified	22. PRICE

EPA Form 2220-1 (9-73)

U.S. GOVERNMENT PRINTING OFFICE: 1977—757-056/5581