United States
Environmental Protection
Agency

Office of Air Quality
Planning and Standards
Research Triangle Park NC 27711

EPA-450/3-85-028a
April 1987

Air

EPA

Coke Oven Emissions from Wet-Coal Charged By-Product Coke Oven Batteries—Background Information for Proposed Standards

Draft EIS

EPA-450/3-85-028a

Coke Oven Emissions from Wet-Coal Charged By-Product Coke Oven Batteries—Background Information for Proposed Standards

Emission Standards and Engineering Division

U.S. Environmental Protection Agency
Region 5, Library (PL-12J)
77 West Jackson Boulevard, 12th Floor
Chicago, IL 60604-3590

U.S Environmental Protection Agency
Office of Air and Radiation
Office of Air Quality Planning and Standards
Research Triangle Park, North Carolina 27711
April 1987

This report has been reviewed by the Emission Standards and Engineering Division of the Office of Air Quality Planning and Standards, EPA, and approved for publication. Mention of trade names or commercial products is not intended to constitute endorsement or recommendation for use. Copies of this report are available through the Library Services Office (MD-35), U.S Environmental Protection Agency, Research Triangle Park NC 27711, or from National Technical Information Services, 5285 Port Royal Road, Springfield VA 22161

ENVIRONMENTAL PROTECTION AGENCY

Background Information
and Draft
Environmental Impact Statement
for Coke Oven Emissions from Wet-Coal
Charged By-Product Coke Oven Batteries

Jack R. Farmer 4/23/87
(Date)

Jack R. Farmer
Director, Emission Standards and Engineering Division
U.S. Environmental Protection Agency
Research Triangle Park, North Carolina 27711

1. The proposed national emission standards would limit coke oven emissions from existing and new wet-coal charged by-product coke oven batteries. The proposed standards implement Section 112 of the Clean Air Act and are based on the Administrator's determination of September 18, 1984 (49 FR 36560) that coke oven emissions are a hazardous air pollutant. EPA Regions III, IV, and V are particularly affected because most coke oven batteries are located in these regions.

2. Copies of this document have been sent to the following Federal Departments: Labor, Health and Human Services, Defense, Transportation, Agriculture, Commerce, Interior, and Energy; the National Science Foundation; the Council on Environmental Quality; members of the State and Territorial Air Pollution Program Administrators; the Association of Local Air Pollution Control Officials; EPA Regional Administrators; Office and Management and Budget; and other interested parties.

3. The comment period for review of this document is 75 days. Mr. Doug Bell, Standards Development Branch, telephone (919) 541-5568, may be contacted regarding the date of the comment period.

4. For additional information contact:

   Dr. James U. Crowder
   Industrial Studies Branch (MD-13)
   U.S. Environmental Protection Agency
   Research Triangle Park, NC 27711
   Telephone: (919) 541-5596

5. Copies of this document may be obtained from:

   U.S. EPA Library (MD-36)
   Research Triangle Park, NC 27711

   National Technical Information Service
   5285 Port Royal Road
   Springfield, VA 22161

TABLE OF CONTENTS

	Page
Tables	viii
Figures	xii
1. SUMMARY	1-1
1.1 REGULATORY ALTERNATIVES	1-1
1.2 ENVIRONMENTAL IMPACT	1-2
1.3 ECONOMIC IMPACT	1-2
2. INTRODUCTION	2-1
3. THE BY-PRODUCT COKE INDUSTRY	3-1
3.1 GENERAL	3-1
3.2 BY-PRODUCT COKING PROCESS	3-6
3.2.1 Coal Preparation and Charging	3-6
3.2.2 Thermal Distillation	3-9
3.2.3 By-Product Collection	3-14
3.3 COKE OVEN CHARGING, TOPSIDE, AND DOOR EMISSIONS	3-16
3.3.1 Discussion of Visible and Mass Emissions	3-19
3.3.2 Wet-Coal Charging Emissions	3-22
3.3.2.1 Emission Sources and Pollutants	3-24
3.3.2.2 Emission Estimates for Uncontrolled Charging	3-24
3.3.2.3 Emission Estimates for Controlled Charging	3-27
3.3.2.4 Factors Affecting Emissions from Charging	3-33
3.3.3 Coke Oven Doors and Their Emissions	3-36
3.3.3.1 Facility Description	3-36
3.3.3.2 Emission Sources and Pollutants	3-43
3.3.3.3 Emissions from Poorly Controlled Door Leaks	3-44
3.3.3.4 Emissions from Well-Controlled Door Leaks	3-46
3.3.3.5 Factors Affecting Emissions from Coke Oven Doors	3-50
3.3.3.5.1 Oven pressure	3-50
3.3.3.5.2 Temperature effects	3-52
3.3.3.5.3 Miscellaneous factors affecting emissions	3-54

CONTENTS (continued)

		Page
	3.3.4 Topside Leaks and Their Emissions	3-55
	3.4 BASELINE REGULATIONS	3-58
	3.5 REFERENCES	3-65
4.	EMISSION CONTROL TECHNIQUES	4-1
	4.1 TECHNOLOGY FOR THE CONTROL OF EMISSIONS FROM CHARGING	4-1
	4.1.1 Stage Charging	4-1
	4.1.1.1 Description of Stage Charging	4-2
	4.1.1.2 Equipment and Engineering Requirements	4-17
	4.1.1.3 Optimizing Stage Charging	4-20
	4.1.1.4 Performance of Optimized Stage Charging	4-22
	4.1.2 Sequential Charging	4-35
	4.1.2.1 Description	4-35
	4.1.2.2 Performance of Sequential Charging	4-40
	4.1.3 Scrubber Systems Mounted on Larry Cars	4-42
	4.1.3.1 Description	4-42
	4.1.3.2 Performance of Scrubber Systems Mounted on Larry Cars	4-45
	4.2 TECHNOLOGY FOR THE CONTROL OF DOOR LEAKS	4-48
	4.2.1 Traditional Oven Door Seal Technology	4-49
	4.2.1.1 Koppers Door	4-50
	4.2.1.2 Wilputte Door	4-52
	4.2.1.3 Wolff Self-Sealing Door	4-54
	4.2.1.4 Hand-Luting	4-54
	4.2.2 Modern Metal-to-Metal Seals	4-56
	4.2.2.1 Modified Koppers Door	4-58
	4.2.2.2 Modified Wilputte Seals	4-61
	4.2.2.3 Ikio Seals	4-63
	4.2.2.4 Battelle Seal (EPA-AISI)	4-65
	4.2.2.5 Gas Seal, Nippon Steel Company	4-67
	4.2.2.6 Prechamber Doors	4-68
	4.2.3 Other Control Techniques	4-70
	4.2.3.1 Maintenance and Operating Procedures	4-70
	4.2.3.2 Effects of Process Variables	4-71
	4.2.3.3 Soft Seals for Control of Chuck Door Emissions	4-72
	4.2.3.4 Hoods for Oven Door Fume Collection	4-73
	4.2.3.5 Cokeside Sheds	4-77
	4.2.3.6 Vented Plug	4-78
	4.2.3.7 Jamb Design	4-80
	4.2.3.8 Heat-Settable Sealant	4-80
	4.2.3.9 Inboard Luting	4-80
	4.2.4 Startup, Shutdown, Upsets, and Breakdowns	4-80
	4.2.5 Door Controls for Tall Ovens	4-82
	4.2.6 Summary of Door Leak Control Performance	4-83
	4.3 TECHNOLOGY FOR THE CONTROL OF TOPSIDE LEAKS (CHARGING PORT LIDS AND STANDPIPES)	4-86
	4.3.1 Description	4-86
	4.3.2 Performance of Control for Topside Leaks	4-89
	4.4 REFERENCES	4-97

CONTENTS (continued)

		Page
5.	MODIFICATIONS	5-1
	5.1 BACKGROUND	5-1
	5.2 POSSIBLE MODIFICATIONS	5-1
	5.2.1 Process Modifications	5-2
	5.2.1.1 Dry-Coal Charging	5-2
	5.2.1.2 Recycle of Waste	5-2
	5.2.1.3 Green Coke	5-3
	5.2.2 Equipment Modifications	5-3
	5.2.2.1 Steam or Liquor Aspiration	5-5
	5.3 REFERENCES	5-5
6.	MODEL PLANTS AND REGULATORY ALTERNATIVES	6-1
	6.1 MODEL BATTERIES	6-1
	6.2 DEVELOPMENT OF REGULATORY ALTERNATIVES	6-3
	6.2.1 Regulatory Alternatives	6-3
	6.2.1.1 Regulatory Alternative I	6-3
	6.2.1.2 Regulatory Alternative II	6-5
	6.2.1.3 Regulatory Alternative III	6-7
	6.2.2 Alternative Control Technologies	6-8
	6.3 REFERENCES	6-9
7.	ENVIRONMENTAL IMPACT	7-1
	7.1 EMISSION RATE ESTIMATES	7-1
	7.2 EMISSION ESTIMATES FOR MODEL BATTERIES	7-7
	7.3 ESTIMATES OF NATIONWIDE EMISSIONS	7-14
8.	COSTS	8-1
	8.1 INTRODUCTION	8-1
	8.2 COST COMPONENTS	8-2
	8.3 COST ESTIMATES	8-6
	8.3.1 Charging Control Costs	8-6
	8.3.2 Door Leak Control Costs	8-19
	8.3.3 Topside Leak Control Costs	8-30
	8.4 MODEL BATTERY AND NATIONWIDE COSTS	8-39
	8.4.1 Model Battery Costs	8-39
	8.4.2 Nationwide Costs	8-43
	8.5 OTHER COST CONSIDERATIONS	8-45
	8.6 REFERENCES	8-45
9.	ECONOMIC IMPACT	9-1
	9.1 INDUSTRY PROFILE	9-1
	9.1.1 Introduction	9-1
	9.1.1.1 Definition of the Coke Industry	9-4
	9.1.1.2 Brief History of the Coke Industry in the Overall Economy	9-4
	9.1.1.3 Size of the Iron and Steel Industry	9-6

CONTENTS (continued)

	Page
9.1.2 Production	9-10
9.1.2.1 Production Description	9-10
9.1.2.2 Production Technology	9-10
9.1.2.3 Factors of Production	9-12
9.1.3 Demand and Supply Conditions	9-15
9.1.4 Market Structure	9-21
9.1.4.1 Concentration Characteristics and Number of Firms	9-21
9.1.4.2 Integration Characteristics	9-28
9.1.4.3 Substitutes	9-29
9.1.4.4 Pricing History	9-30
9.1.4.5 Market Structure Summary	9-30
9.1.5 Financial Performance	9-30
9.1.6 Industry Trends	9-40
9.1.7 Market Behavior: Conclusions	9-42
9.2 ECONOMIC IMPACT OF REGULATORY ALTERNATIVE	9-43
9.2.1 Summary	9-43
9.2.2 Methodology	9-44
9.2.2.1 Supply Side	9-45
9.2.2.1.1 Data base	9-47
9.2.2.1.2 Output relationships	9-47
9.2.2.1.3 Operating costs	9-47
9.2.2.1.4 Capital costs	9-48
9.2.2.1.5 Environmental costs	9-50
9.2.2.1.6 Coke supply function--existing facilities	9-52
9.2.2.1.7 Coke supply function--new facilities	9-55
9.2.2.2 Demand Side	9-55
9.2.2.3 Synthesis	9-58
9.2.2.4 Economic Impact Variables	9-62
9.2.3 Furnace Coke Impacts	9-66
9.2.3.1 Price Effects	9-69
9.2.3.2 Production and Consumption Effects	9-69
9.2.3.3 Coal Consumption and Employment Effects	9-72
9.2.3.4 Financial Effects	9-74
9.2.3.5 Battery and Plant Closures	9-79
9.2.4 Foundary Coke Impacts	9-81
9.2.4.1 Price and Production Effects	9-81
9.2.4.2 Coal Consumption and Employment Effects	9-83
9.2.4.3 Financial Effects	9-83
9.2.4.4 Battery and Plant Closures	9-90
9.3 POTENTIAL SOCIOECONOMIC AND INFLATIONARY IMPACTS	9-90
9.3.1 Compliance Costs	9-90
9.3.2 Balance of Trade	9-90
9.3.3 Community Impacts	9-93

CONTENTS (continued)

		Page
	9.3.4 Small Business Impacts	9-93
	9.3.5 Energy	9-96
9.4	REFERENCES	9-96
APPENDIX A	EVOLUTION OF THE PROPOSED STANDARDS	A-1
APPENDIX B	INDEX TO ENVIRONMENTAL IMPACT CONSIDERATIONS	B-1
APPENDIX C	EMISSION SOURCE TEST DATA	C-1
APPENDIX D	EMISSION MEASUREMENT AND CONTINUOUS MONITORING	D-1
APPENDIX E	COKE OVEN EMISSIONS RISK ASSESSMENT FOR WET-COAL CHARGED COKE OVEN BATTERIES	E-1

TABLES

Number		Page
1-1	Assessment of Environmental and Economic Impacts for Each Regulatory Alternative Considered.	1-3
3-1	Production and Consumption History of Coke in the United States	3-3
3-2	Geographical Location and Production of Coke in the United States.	3-4
3-3	Coke and Coal Chemicals Produced by U.S. Coke Plants in 1980.	3-5
3-4	BSO Emission Factors for Poorly Controlled Coke Oven Sources	3-18
3-5	Gaseous Pollutants from Charging.	3-25
3-6	Estimates of Controlled Charging Emissions.	3-32
3-7	Types of Ovens in Current Use	3-38
3-8	Major Components of Coke Oven Gas	3-43
3-9	Minor Components of Coke Oven Gas	3-44
3-10	POM Pollutants from Coke Oven Door Leaks.	3-45
3-11	Cokeside Shed Test Results.	3-47
3-12	Exponential Model for Door Leak Emissions	3-49
3-13	The Effect of Temperature on the Relative Coking Time.	3-54
3-14	Topside Leak Emission Test.	3-57
3-15	Summary of Baseline Regulations for Charging.	3-59
3-16	Summary of Baseline Regulations for Door Leaks.	3-59
3-17	Summary of Baseline Regulations for Lid Leaks	3-60
3-18	Summary of Baseline Regulations for Offtake Leaks	3-60
3-19	Baseline Visible Emission Limits	3-62
4-1	Equipment Requirements for Stage Charging	4-19
4-2	Summary of Visible Emission Data on Optimized Stage Charging.	4-23
4-3	Summary of Visible Emission Data on Basic Stage Charging.	4-25
4-4	Statistical Results from Charging Data	4-28
4-5	Comparison of Arithmetic Average and Log Average.	4-30
4-6	Visible Emission Data for the Bethlehem Plants at Johnstown.	4-32
4-7	Particulate Emissions from Scrubbers Mounted on Larry Cars.	4-47

TABLES (continued)

Number		Page
4-8	Standard Koppers Door at Kaiser Steel	4-52
4-9	Percent Leaking Doors for Batteries at U.S. Steel, Clairton.	4-61
4-10	Summary of Door Leak Data	4-84
4-11	Confidence Levels for Door Leak Data.	4-85
4-12	Visible Emission Data on Topside Leaks from Charging Port Lids, U.S. Steel, Fairfield.	4-91
4-13	Visible Emission Data on Topside Leaks from Charging Port Lids, U.S. Steel, Clairton	4-92
4-14	Visible Emission Data on Offtake Leaks, Kaiser Steel, Fontana	4-93
4-15	Summary of Lid Leak Data.	4-94
4-16	Summary of Offtake Leak Data.	4-96
6-1	Model Batteries	6-2
6-2	Summary of Regulatory Alternatives	6-4
7-1	Charging Baseline Limits and Estimated Emission Rates	7-3
7-2	Door Leak Baseline Limits and Estimated Emission Rates	7-5
7-3	Lid and Offtake Leak Baseline Limits and Estimated Emission Rates	7-6
7-4	Demonstrated Performance Levels and Estimated Emission Rates for Regulatory Alternative II	7-8
7-5	Emission Limits and Estimated Emission Rates for Regulatory Alternative III	7-9
7-6	Model Battery Characteristics	7-10
7-7	Emission Estimates for the Model Batteries for the Baseline and Regulatory Alternative II	7-12
7-8	Regulatory Alternative III Emission Estimates for the Model Batteries	7-13
7-9	Battery Characteristics	7-15
7-10	Estimated Average Visible Emissions	7-18
7-11	Baseline Emission Estimates	7-22
7-12	Summary of Nationwide BSO Emission Estimates	7-25
8-1	Cost Data from Empire Coke	8-3
8-2	Cost Data from Bethlehem Steel	8-4
8-3	Cost Data from Armco, Inc.	8-7
8-4	Armco Costs for Two New 6-Meter Batteries	8-9
8-5	Indices for Updating Costs	8-10
8-6	Charging Costs at Empire Coke	8-11
8-7	Charging Costs for Armco's Wilputte Batteries	8-13
8-8	Charging Costs for Armco's Tall Batteries	8-14
8-9	Charging Costs for Bethlehem Steel	8-15
8-10	Charging Costs for U.S. Steel at Clairton	8-17
8-11	Charging Costs Summary	8-18
8-12	Door Control Costs for Empire Coke	8-20

TABLES (continued)

Number		Page
8-13	Door Control Costs for Armco's Wilputte Battery	8-21
8-14	Door Control Costs for Armco's 6-M Batteries	8-22
8-15	Door Control Costs for Bethlehem Steel	8-24
8-16	Door Control Costs for U.S. Steel at Clairton	8-25
8-17	Door Costs Summary	8-26
8-18	Door Costs and Performance	8-28
8-19	Topside Leak Control Costs for Empire Coke	8-31
8-20	Topside Leak Control Costs for Armco, Inc.	8-32
8-21	Topside Leak Control Costs for Bethlehem Steel	8-33
8-22	Topside Leak Control Costs for U.S. Steel at Clairton	8-34
8-23	Lid Leak Control Costs	8-36
8-24	Offtake Leak Control Costs	8-38
8-25	Model Battery Costs for Regulatory Alternative II	8-40
9-1	Coke Oven Control Option: Regulatory Alternative II	9-2
9-2	Coke Industry Foreign Trade	9-6
9-3	Coke Production in the World.	9-7
9-4	Value of Shipments, SIC 3312.	9-8
9-5	Value Added, SIC 3312	9-9
9-6	Maximum Annual Capacity of Oven Coke Plants in the United States in November, 1984	9-13
9-7	Typical Cost Breakdowns: Furnace Coke Production and Hot Metal (Blast Furnace) Production.	9-14
9-8	Employment in the By-Product Coke Industry.	9-16
9-9	Coke Rate	9-18
9-10	Coke Plants in the United States, November 1984	9-23
9-11	Interregional Coke Shipments in 1977.	9-26
9-12	Percent of Coke Capacity Owned by Top Firms (January 1980).	9-27
9-13	Comparison of Coal Prices and Domestic and Imported Coke Prices	9-31
9-14	Financial Information on Coke-Producing Firms, 1983	9-32
9-15	Financial Ratios for Coke-Producing Firms	9-37
9-16	Estimated Capital Costs of New Plants	9-51
9-17	Estimate of Elasticities of Steel and Coke Markets.	9-59
9-18	Economic Impact Variables and Affected Sectors.	9-63
9-19	Baseline Values for Economic Impact Analysis--Furnace Coke, 1983	9-67
9-20	Pollution Abatement Expenditures for SIC 3312	9-68
9-21	Price Effects of Regulatory Alternative II--Furnace Coke, 1984.	9-70
9-22	Production and Consumption Effects of Regulatory Alternative II--Furnace Coke, 1984.	9-71
9-23	Coal Consumption and Employment Effects of Regulatory Alternative II--Furnace Coke, 1984.	9-73
9-24	Industry Capital Requirements of Regulatory Alternative II--Furnace Coke, 1984.	9-75

TABLES (continued)

Number		Page
9-25	Capital Cost of Compliance as a Percentage of Net Investment Regulatory Alternative II--Furnace Coke Producers, 1984	9-77
9-26	Capital Cost as a Percentage of Annual Cash Flow Regulatory Alternative II--Furnace Coke Producers, 1984	9-78
9-27	1983 Baseline Values for Economic Impact Analysis--Foundry Coke, 1983	9-82
9-28	Price and Quantity Effects of Regulatory Alternative II--Foundry Coke, 1984.	9-84
9-29	Coal Consumption and Employment Effects of Regulatory Alternative II--Foundry Coke, 1984.	9-85
9-30	Industry Capital Requirements of Regulatory Alternative II--Foundry Coke, 1984	9-86
9-31	Capital Cost of Compliance as a Percentage of Net Investment Regulatory Alternative II--Foundry Coke Producers, 1984	9-88
9-32	Capital Cost as a Percentage of Annual Cash Flow Regulatory Alternative II--Foundry Coke Producers, 1984	9-89
9-33	Compliance Costs of Regulatory Alternative II--Furnace Coke Producers, 1984	9-91
9-34	Compliance Costs of Regulatory Alternative II--Foundry Coke Producers, 1984	9-92
9-35	Employment Data for U.S. Firms Operating Coke Ovens, 1983	9-95

FIGURES

Number		Page
3-1	Schematic diagram of by-product coke battery.	3-7
3-2	Flow sheet showing the major steps in the by-product coking process.	3-8
3-3	Charging and leveling operations.	3-10
3-4	Transverse and longitudinal sections through Koppers-Becker underjet-fired low-differential combination by-product coke oven.	3-12
3-5	General perspective cut-away section of Koppers-Becker combination ovens with gun-flue heating facilities.	3-13
3-6	Schematic representation of the pushing operation	3-15
3-7	Schematic of coke oven topside.	3-23
3-8	Comparison of results between recording only visible emissions greater than 20 percent opacity and recording all visible emissions	3-28
3-9	Comparison of charging emissions models	3-31
3-10	Estimates of controlled charging emissions	3-34
3-11	Uncontrolled charge	3-35
3-12	Vertical cross section of coke oven door on pusher side of oven.	3-37
3-13	Outside elevation of a pusherside coke oven door.	3-39
3-14	Vertical cross section of a pusherside coke oven door	3-40
3-15	Horizontal cross section of a coke oven door.	3-41
3-16	The effect of time on the internal oven pressure.	3-51
4-1	Steps in stage charging coal into a coke oven with four charging holes.	4-3
4-2	A typical aspiration system operating in the return bend of the gas collection duct	4-5
4-3	Aspiration capacity vs. nozzle pressure for single standpipe	4-7
4-4	"Still-ERIN" charging system.	4-8
4-5	Air flow gooseneck area open in test ovens.	4-10
4-6	Aspiration of gases from a coke oven into the gas collecting mains	4-11
4-7	Variation in the time required to charge coal	4-14
4-8	Jumper pipe	4-16
4-9	A "puff" of emissions during stage charging	4-36
4-10	AISI/EPA larry car coke oven charging system.	4-38
4-11	Flow of gases in the AISI/EPA sequential charging system.	4-39

FIGURES (continued)

Number		Page
4-12	Representative scrubber system on a larry car	4-43
4-13	Details of a shrouded drop sleeve	4-44
4-14	Koppers door	4-51
4-15	Wilputte door	4-53
4-16	Wolff self-sealing door design	4-55
4-17	Cross-section of modified Wilputte door	4-62
4-18	Ikio door	4-64
4-19	Battelle seal design	4-66
4-20	Wolff prechamber door	4-69
4-21	Coke oven door hood that assists in controlling pushing emissions	4-74
4-22	Channel for the passage of gas formed by hinged plates on the door	4-75
4-23	Channel for the passage of gas formed by a door hinged to a buckstay	4-76
4-24	Vented plug on pusherside door	4-79
4-25	Slotted jamb design	4-81
9-1	Uses of oven coke as percents of total coke consumption	9-11
9-2	United States apparent consumption of coke	9-17
9-3	Economic impact model	9-46
9-4	Coke plant cost centers	9-49
9-5	Estimated average cost of furnace coke production as a function of plant production, 1984	9-53
9-6	Estimated average cost of foundry coke production as a function of plant production, 1984	9-54
9-7	Marginal and average cost functions for furnace coke, 1984	9-56
9-8	Marginal and average cost functions for foundry coke, 1984	9-57
9-9	Coke supply and demand without import competition	9-60
9-10	Coke demand and supply with import competition	9-61
9-11	Economic impact variables without import competition	9-64
9-12	Economic impact variables with import competition	9-65

1. SUMMARY

1.1 REGULATORY ALTERNATIVES

The regulatory alternatives for wet-coal charging are:

I - No national emission standard (regulation by existing State Implementation Plans (SIPs)/Occupational Safety and Health Administration (OSHA)/consent decree limits). Existing emission limits range from 11 to 32 seconds per charge.

II - For all new and existing batteries, a maximum of 16 seconds of visible emissions per charge (log average* of 10 charges) and not more than 1 charge in 10 that exceeds 45 seconds of emissions.

III - For all new and existing batteries, a maximum of 11 seconds of visible emissions per charge (average of 10 charges).

Regulatory Alternative I requires full stage charging, and Regulatory Alternative II requires the optimization of stage charging. It is not known how all existing batteries could meet the emission limit of Regulatory Alternative III.

The regulatory alternatives for door leaks are:

I - No national emission standard (regulation by existing SIP/OSHA/consent decree limits). Emission limits range from 4 to 16 percent leaking doors (PLD).

II - Ten PLD for all new and existing batteries.

III - Five PLD for all new and existing batteries.

Regulatory Alternative I requires a door leak control program of inspecting, cleaning, replacing, or repairing damaged parts and routine

---

*Log average $= e^{y} - 1$ where $y = \frac{\ln (X^1 + 1) + \ln (X^2 + 1) + \ldots \ln (Xn + 1)}{n}$, X = seconds of visible emissions, and n = number of observations.

maintenance of doors and seals. Regulatory Alternative II may require modified doors and seals for all self-sealing doors and additional manpower for luted doors. The control requirements for all batteries to meet the limits of Regulatory Alternative III have not been identified.

The regulatory alternatives for topside leaks are:

I - No national emission standard (regulation by existing SIP/OSHA/consent decree limits). Existing emission limits range from 1 to 5 percent leaking lids (PLL) and from 4 to 10 percent leaking offtakes (PLO).

II - Three PLL and six PLO.

III - One PLL and four PLO.

Regulatory Alternative II may require additional manpower for luting and equipment modifications for some batteries. It is not known how all existing batteries could meet the emission limits of Regulatory Alternative III for topside leaks.

1.2 ENVIRONMENTAL IMPACT

Table 1-1 summarizes the environmental impacts of the regulatory alternatives. The regulatory baseline (Regulatory Alternative I) of SIP, consent decrees, and OSHA regulations will control benzene soluble organics (BSO) emissions to a level of 719 Mg/yr (126 to 1,310 Mg/yr). Regulatory Alternative II for the combined sources reduces nationwide BSO emissions to 420 Mg/yr (75 to 765 Mg/yr). Regulatory Alternative III for the combined sources would reduce BSO emissions to 101 Mg/yr (21 to 180 Mg/yr).

None of the regulatory alternatives beyond the current baseline would have an impact on water pollution, the generation of solid waste, or energy usage.

1.3 ECONOMIC IMPACT

Cost functions were derived from data supplied by industry. These cost functions were applied to each battery to estimate the cost of improved emission control. Individual cost estimates were summed to estimate nationwide costs.

TABLE 1-1. ASSESSMENT OF ENVIRONMENTAL AND ECONOMIC IMPACTS FOR EACH REGULATORY ALTERNATIVE CONSIDERED

Source	Administrative action	Air impact[a]	Water impact[a]	Solid waste impact[a]	Energy impact[a]	Noise impact
Wet-coal charging	Regulatory Alternative I	+4	-2	0	-1	0
	Regulatory Alternative II	+2	0	0	0	0
	Regulatory Alternative III	+2	0	0	0	0
Door leaks	Regulatory Alternative I	+4	0	0	0	0
	Regulatory Alternative II	+2	0	0	0	0
	Regulatory Alternative III	+2	0	0	0	0
Topside leaks	Regulatory Alternative I	+4	0	0	0	0
	Regulatory Alternative II	+2	0	0	0	0
	Regulatory Alternative III	+2	0	0	0	0

[a]Long-term impact.

KEY: + Beneficial impact
- Adverse impact
0 No impact
1 Negligible impact
2 Small impact
3 Moderate impact
4 Large impact

Regulatory Alternative II for charging may require a total annualized expenditure of $4.7 million per year. No significant capital expenditures are expected because most of the equipment items needed to control charging emissions are in place as a result of existing regulations. Regulatory Alternative II for doors may require a nationwide capital investment of $6.1 million and a total annualized cost of $5.4 million per year. This cost estimate assumes that a significant number of doors and seals will be modified for improved emission control. Regulatory Alternative II for topside leaks may require a nationwide capital investment of $5.2 million if many batteries replace existing offtake systems. Total annualized costs are estimated as $1.6 million per year for control of lid leaks and $7.6 million per year for control of offtake leaks.

Regulatory Alternative III would apply lowest achievable emission rates (LAER) to all batteries. LAER limits have currently been applied to only a few new and rebuilt batteries. If all existing batteries were required to meet LAER limits, many of these batteries would likely have to be rebuilt to operate as new batteries. The cost of rebuilding is on the order of millions of dollars per battery, and there are an estimated 134 existing batteries. A finite cost estimate for Regulatory Alternative III could not be derived; however, forcing numerous battery closures and rebuilds would have a severe and adverse economic impact on the industry.

2. INTRODUCTION

EPA announced a decision to list coke oven emissions as a hazardous air pollutant under Section 112 of the Clean Air Act on September 18, 1984 (49 FR 36560). As a result, standards for regulating coke oven emissions are under development. The standard-setting process involves the identification of sources of coke oven emissions and options for controlling them. The selection of a standard is based on an evaluation of the cost, economic, environmental (air and nonair), and health impacts of the control options. This document provides the background information necessary for this evaluation of coke oven emissions from wet-coal charging, doors, lids, and offtakes on by-product coke oven batteries.

3. THE BY-PRODUCT COKE INDUSTRY

3.1 GENERAL

Coke is one of the basic materials used in blast furnaces for the conversion of iron ore into iron. The major portion (92 percent in 1983) of the coke produced in the United States is used for this purpose. Most of the iron is subsequently processed into steel, and an adequate supply of coke is necessary to ensure a continuing steel supply. Coke also is used by a number of other industries, principally iron foundries, nonferrous smelters, and chemical plants.

Coke is produced in the United States by two methods: the original beehive process and the contemporary by-product recovery or slot oven process. Approximately 99 percent of U.S. annual coke production is produced by the slot oven process. This conversion of coal to coke is performed in long, narrow slot ovens, which are designed to permit separation and recovery of the volatile materials (by-products) evolved from coal during the coking process.

In 1975 it was estimated that in the United States there were 62 operating by-product coke plants, which consisted of 231 batteries containing 13,324 ovens.[1] However, by 1984 only 43 by-product coke plants with 134 batteries remained in existence and only 36 plants were operating.[2] The industry has two sectors, and plants are classified generally as "furnace" and "merchant." Furnace plants are owned by or affiliated with iron- and steel-producing companies that produce coke primarily for consumption in their own blast furnaces, although they also engage in some intercompany sales among steel firms with excesses or deficits in coke capacity. In 1984 there were 28 furnace plants, which accounted for roughly 92 percent of the total coke production.

Independent merchant plants that produce coke for sale on the open market are typically owned by chemical or coal firms. The 15 merchant plants in existence in 1984 accounted for about 8 percent of the total coke produced. These firms sell most of their products to other firms engaged in blast furnace, foundry, and nonferrous smelting operations. Chemical companies have entered the coke industry to obtain the by-product hydrocarbon gases that are released when coal is converted into coke; coal firms have entered the coke industry as a form of downstream vertical integration.

In 1983, 23.5 million megagrams of coke were produced in slot ovens in the United States. This production was less than the 1982 production level of 25.6 million megagrams and was 40 percent less than the 1981 production level of 38.9 million megagrams.[3] In 1983 furnace plants produced 20.5 million megagrams of coke and merchant plants produced 3.0 million megagrams of coke. Principal markets for merchant coke were blast furnaces not associated with integrated coke-producing facilities, independent gray-iron foundries, nonferrous smelters, chemical plants, and affiliated foundries. A production and consumption history of coke in the United States since 1970 is presented in Table 3-1.

Although coke was produced in 14 States in 1983, 59 percent of the production occurred in three eastern States: Pennsylvania, Ohio, and Indiana.[2] Indiana, with 5.5 million megagrams of output, was the leading coke-producing State and accounted for 23 percent of U.S. coke production. Pennsylvania produced 5.3 million megagrams of coke while Ohio produced 3.0 million megagrams of coke. The relative amounts of coke produced in Pennsylvania declined dramatically in 1980 to 1982. The geographical distribution of coke oven facilities reflects the locations of coal deposits and steelmaking facilities. Table 3-2 shows the geographical distribution of coke production in the United States from 1972 through 1983.[2 3 4]

The yield of coke from coal, approximately 69 percent, has remained nearly constant during the past decade.[3 4] This production does not include breeze, the undersize coke that results from the crushing and screening of the coke after it is removed from the oven. Although not completely standardized, the term breeze is generally applied to coke

TABLE 3-1. PRODUCTION AND CONSUMPTION HISTORY OF COKE IN THE UNITED STATES[a]

Year	U.S. oven coke produced			Percent change in production from previous year	Coke imports	Coke consumption[b]			Blast furnace iron produced	Percent change in production from previous year
	Merchant plant	Furnace plant	Total			In iron furnaces	All other purposes	Total		
1970	5.37	54.19	59.56	+2.5	0.14	52.75	4.59	57.34	83.28	-3.9
1971	5.05	46.36	51.41	-13.7	0.15	46.72	4.71	51.43	74.12	-11.0
1972	5.11	49.20	54.39	+5.6	0.16	49.54	4.93	54.47	81.10	+9.4
1973	4.78	52.82	57.60	+6.1	0.997	55.08	4.58	59.66	91.81	+13.2
1974	4.64	50.47	55.11	-4.3	3.17	53.02	5.13	58.15	86.99	-5.2
1975	4.28	46.97	51.25	-7.0	1.63	44.29	4.42	48.71	72.48	-16.7
1976	3.95	48.42	52.37	+2.2	1.18	46.77	4.78	51.55	78.83	+8.8
1977	3.33	44.80	48.13	-8.0	1.90	43.99	5.08	49.07	73.75	-6.4
1978	3.09	40.66	43.75	-9.1	5.17	47.32	3.73	51.05	79.56	+7.9
1979	4.50	43.63	48.13	+10.0	3.61	45.96	3.72	49.68	78.93	-0.8
1980	3.85	38.09	41.94	-12.9	0.60	37.55	3.23	40.78	62.33	-21.0
1981	4.25	34.65	38.90	-7.2	0.48	36.77	2.66	39.43	66.95	+7.4
1982	2.49	23.07	25.56	-34.3	0.11	21.96	2.39	24.35	39.28	-41.3
1983	2.96	20.50	23.46	-8.2	0.03	25.06	2.31	27.37	46.27	+17.8

[a]All quantities in million megagrams unless otherwise noted.

[b]Coke consumption figures include beehive coke.

TABLE 3-2. GEOGRAPHICAL LOCATION AND PRODUCTION OF COKE IN THE UNITED STATES[2 4a]

Year	AL	CA, CO UT	IL	IN	KY, MO, TN, TX	MD NY	MI	MN WI	OH	PA	WV	Total
1972	4.9	2.7	1.9	8.3	1.9	4.9	3.3	0.74	8.0	14.4	3.2	54.3
1974	4.6	3.0	1.7	8.2	1.7	5.9	3.0	0.87	8.0	14.8	3.2	55.1
1976	4.2	2.9	1.5	7.5	1.2	5.8	3.1	0.65	7.6	14.7	3.1	52.4
1978	3.3	2.4	1.3	7.4	0.96	3.8	2.8	0.65	7.0	11.8	3.1	44.5
1980	3.1	2.4	1.1	7.3	1.4	3.7	2.8	--	6.3	11.1	2.8	42.0
1982	1.6	b	1.1	4.8	0.79	b	2.3	--	4.5	4.6	b	25.6
1983	1.2	b	1.2	5.5	1.0	b	1.8	--	3.0	5.3	b	23.5

[a]All quantities in millions of megagrams (metric tons).

[b]Data withheld to avoid disclosure of individual plant data.

that will pass through a half-inch screen. In 1980, coke plants produced 2.7 million megagrams of breeze, which is equivalent to 64 kg/Mg of coal carbonized.[3] Because of its small size, breeze is not suitable for use in ferrous blast furnaces. However, it is used for the sintering of iron-bearing dust and fine ores, boiler fuel, and for other industrial purposes.

After separation and recovery, the by-products that evolve during the coking process are used within the facility or are marketed. Typical products and by-products from the production of coke during 1980 are presented in Table 3-3.[3]

Approximately 92 percent (25.1 million megagrams) of the coke distributed by U.S. producers in 1983 was shipped to blast furnace plants, 5 percent went to foundries, and the remainder went to other industrial plants.[3] Apparent consumption (or total consumption) of coke in the United States equaled 27.4 million megagrams in 1983 and 24.4 million megagrams in 1982. Apparent consumption includes domestic production plus imports, minus exports, plus or minus any net change in stocks. Apparent consumption, linked closely with iron demand, increased from 1975 to 1976, corresponding to an 8.8 percent increase in blast furnace iron production. As iron production declined in 1982, apparent consumption decreased by 83 percent from the 1981 level. Both apparent consumption of coke and blast furnace iron production increased in 1983.

Consumption of coke in iron furnaces has decreased partly because of decreases in the coke rate for these furnaces. The coke rate is the ratio between the coke consumed in blast furnaces and blast furnace output. Although the output of pig iron and ferroalloys from blast furnaces has

TABLE 3-3. COKE AND COAL CHEMICALS PRODUCED BY U.S. COKE PLANTS IN 1980[3]

Product	Total production
Coke	41.9 million megagrams
Breeze	2.7 million megagrams
Crude tar	2,020 million liters
Crude light oil	603 million liters
Ammonia (sulfate equivalent)	0.36 million megagrams
Coke oven gas	20 billion cubic meters

increased significantly during the past 2 decades, the blast furnace coke rate has declined. In 1983, an average of only 540 kg of coke was required to produce 1 Mg of pig iron and ferroalloys, compared with 860.0 kg in 1956.[5] Various factors have contributed to this reduction, but the primary causes are higher grade ore burdens and the use of increased quantities of supplemental fuels.

Supplemental fuels, which consist primarily of fuel oil, tar, and natural gas, can reduce the coke requirements for the ore reduction process. The use of supplemental fuels has increased significantly in the past 10 years, and in 1975 it resulted in a decreased need for blast furnace coke of approximately 3.6 million megagrams.[5] The application of supplemental fuels to replace coke used in blast furnaces is inherently limited because coke is the principal agent in reducing iron ore. Therefore, even though the supplemental fuels are cheaper than coke on a heat-content basis, they will not be able to replace coke in this vital application. In the near future, however, these fuels may help to offset the deficit in projected coke production levels.

3.2 BY-PRODUCT COKING PROCESS

Figure 3-1 illustrates the major process equipment in a schematic diagram of a by-product coke battery. Note that the coke side is the side where the coke is quenched and dumped, and the pusher side is the side from which the pushing ram operates. A flow sheet is provided in Figure 3-2 to give an overview of the process from coal charging to by-product recovery. This operation will be discussed in greater detail in three major subprocesses: coal preparation and charging, thermal distillation and pushing, and by-product recovery.

3.2.1 Coal Preparation and Charging

The coal that is charged to the by-product coke ovens is usually a blend of two or more low, medium, or high volatile coals that are generally low in sulfur and ash. Blending is required to control the properties of the resulting coke, to optimize the quality and quantity of by-products, and to avoid the expansion exhibited by types of coal that may cause excessive pressure on the oven walls during the coking process.

Coal is usually received on railroad cars or barges. Conveyor belts transfer the coal as needed from the barges or from a coal storage pile to

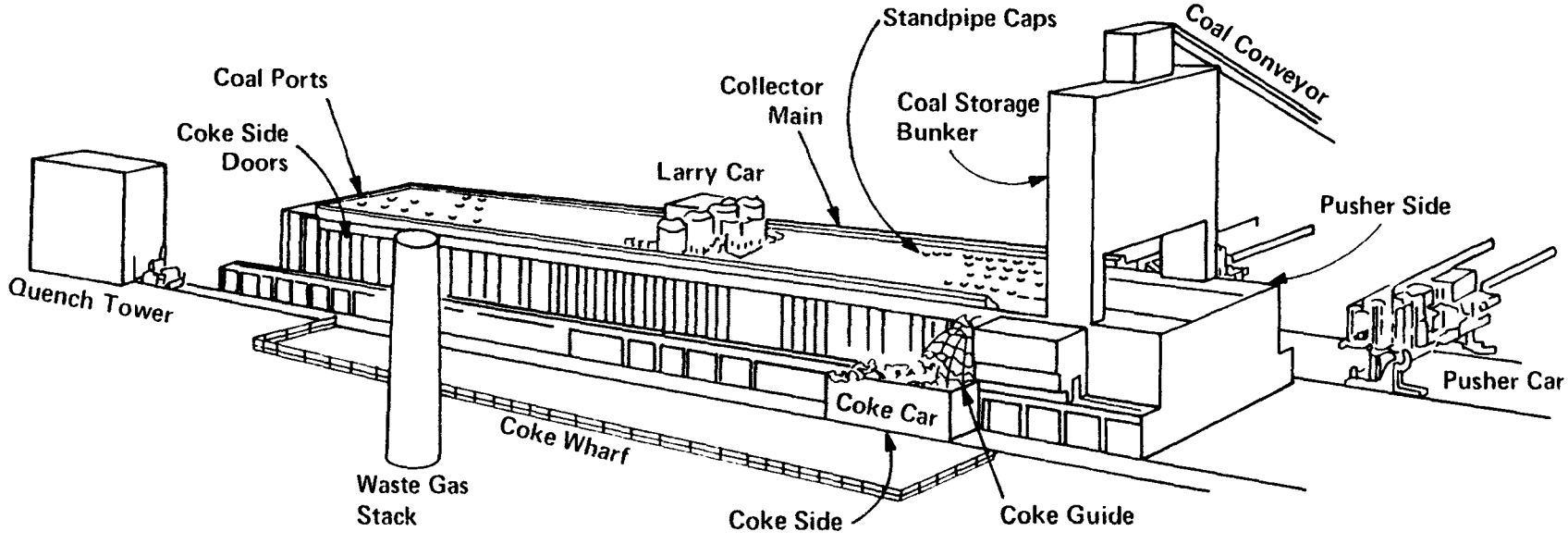

Figure 3-1. Schematic diagram of by-product coke battery.

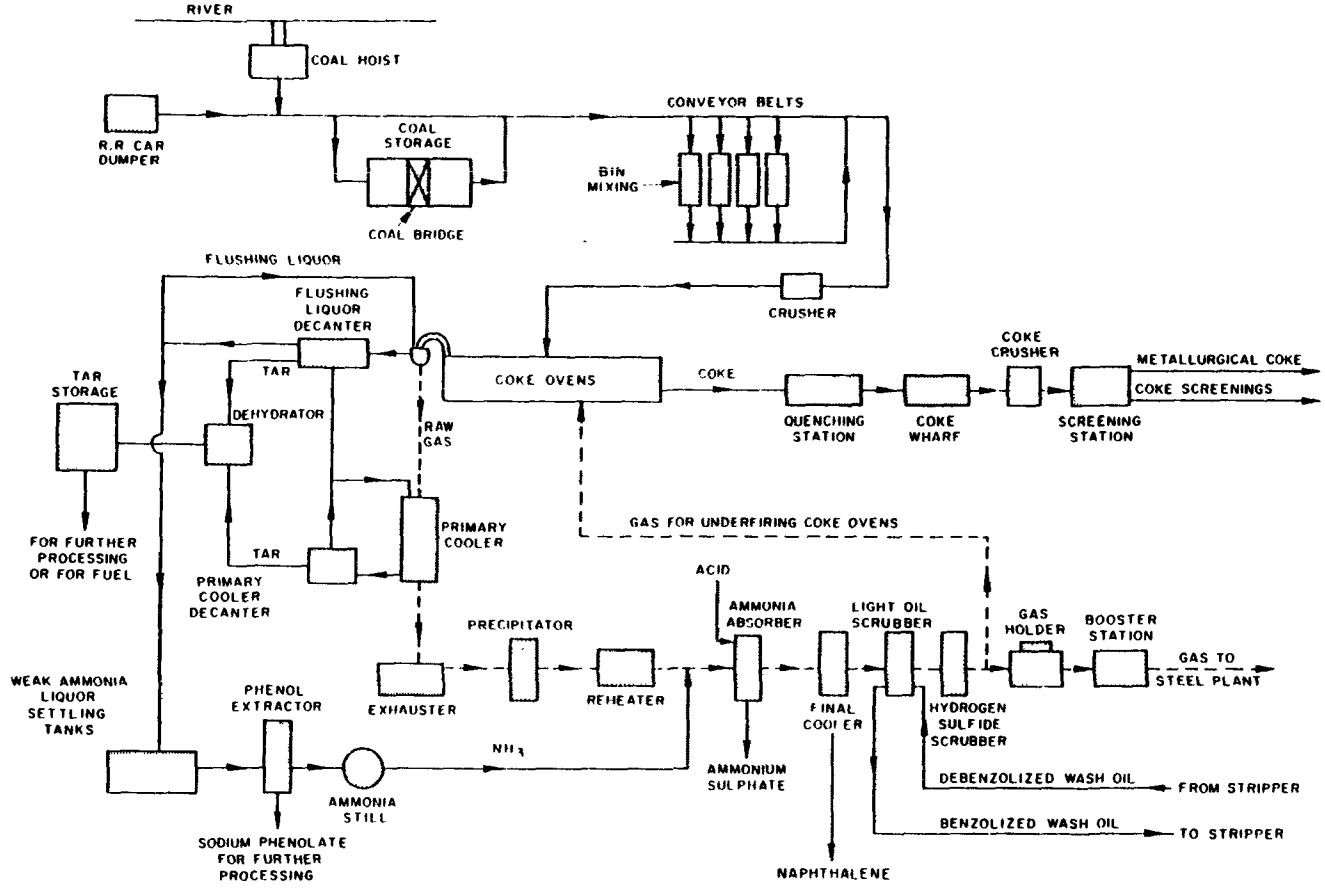

Figure 3-2. Flow sheet showing the major steps in the by-product coking process. (copyright 1971 by United States Steel Corporation)

mixing bins where the various types of coal are stored. The coal is transferred from the mixing bins to the crusher where it is pulverized to a preselected size between 0.15 and 3.2 mm. The desired size depends on the response of the coal to coking reactions and the ultimate coke strength that is required. For example, low volatile coals coke more readily if the particle size is small, and smaller particles are reported to give greater strength to the coke.

The pulverized coal is then mixed and blended, and sometimes water and oil are added to control the bulk density of the mixture. The prepared coal mixture is transported to the coal storage bunkers on the coke oven batteries as shown in Figure 3-1.[6] A weighed amount or volume of prepared coal is discharged from the bunker into a larry car, a vehicle which is driven by electric motors and travels the length of the battery top on a wide gauge railroad track. The larry car is positioned over the empty, hot oven, the lids on the charging ports are removed, and the coal is discharged from the hoppers of the larry car through discharge chutes. The flow rate from the hoppers to the oven may be controlled by gravity, a rotary table, or screw feeders. To prevent gases from escaping during charging, a steam-jet aspirator is used in most plants to draw gases from the space above the charged coal into the collecting main.[7]

Peaks of coal will form directly under the charging ports as the oven is filled. As shown in Figure 3-3, these peaks are leveled by a steel bar that is cantilevered from the pusher machine through an opening called the chuck door on the pusher side of the battery. This leveling process provides a clear vapor space and exit tunnel for the gases that evolve during coking to flow to the standpipes and aids in the uniform coking of the coal.[7] After filling, the chuck door and the topside charging ports are closed; the latter may be sealed with a wet clay mixture called luting.

3.2.2 Thermal Distillation

The thermal distillation of coal to separate volatile and nonvolatile components takes place in coke ovens that are grouped in batteries. A battery consists of 20 to 100 adjacent ovens with common side walls which are made of high quality silica and other types of refractory brick and contain integral flues. Typically, the individual slot ovens are 11 to 16.8 m long, 0.35 to 0.5 m wide, and 3.0 to 6.7 m high. The heating systems fall into two general classes: underjet and gun-flue. In the underjet

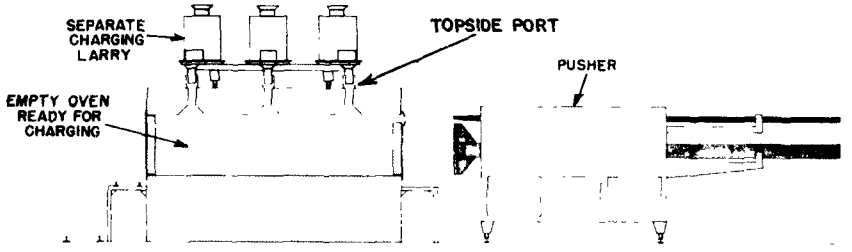

A. THE CHARGING LARRY, WITH HOPPERS CONTAINING MEASURED AMOUNTS OF COAL, IS IN POSITION OVER CHARGING HOLES FROM WHICH COVERS HAVE BEEN REMOVED. THE PUSHER HAS BEEN MOVED INTO POSITION.

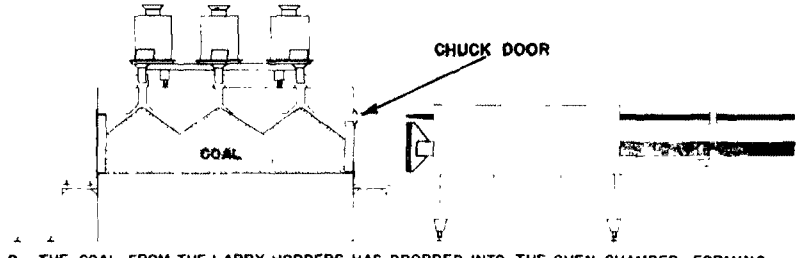

B. THE COAL FROM THE LARRY HOPPERS HAS DROPPED INTO THE OVEN CHAMBER, FORMING PEAKED PILES.

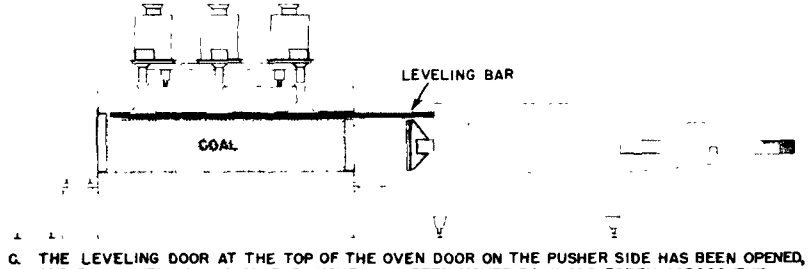

C. THE LEVELING DOOR AT THE TOP OF THE OVEN DOOR ON THE PUSHER SIDE HAS BEEN OPENED, AND THE LEVELING BAR ON THE PUSHER HAS BEEN MOVED BACK AND FORTH ACROSS THE PEAKED COAL PILES TO LEVEL THEM. THE BAR NEXT IS WITHDRAWN FROM THE OVEN, THE LEVELING DOOR AND CHARGING HOLES ARE CLOSED, AND THE COKING OPERATION BEGINS.

Figure 3-3. Charging and leveling operations. (copyright 1971 by United States Steel Corporation)

heating system, illustrated in Figure 3-4, the flue gas is introduced into each flue from piping in the basement of the battery. The gas flow to each flue can be metered and controlled. The gun-flue heating system, shown in Figure 3-5, introduces the gas through a horizontal gas duct extending the length of each wall slightly below the oven floorline. Short ducts lead upward to a nozzle brick at the bottom of each of the vertical flues.[7]

Heat for the coking operation is provided by a regenerative combustion system located below the ovens. Because the combustion flue gas contains a significant amount of process heat, two heat regenerators are used for recovery. These regenerators are located below each oven, one for combustion air and one for the combustion waste gas, and the flow is alternated between the two at about 30 min intervals. The slot ovens operate like chemical retorts in that they are both batch operated, fitted with exhaust flues (standpipes), and function without the addition of any reagent.

The operation of each oven in the battery is cyclic, but the batteries usually contain a sufficiently large number of ovens (an average of 57) so that the yield of by-products is essentially continuous. The individual ovens are charged and discharged at approximately equal time intervals during the coking cycle. The resultant constant flow of evolved gases from all the ovens in a battery helps to maintain a balance of pressure in the flues, collecting main, and stack. All of the ovens are fired continuously at a constant rate, irrespective of a particular oven's stage in the coking cycle. If damage to the refractory occurs in inaccessible locations, through overheating or expansion of coal, repairs may be extremely difficult. A cooldown takes from 5 to 7 weeks, so a battery shutdown is undertaken only as a last alternative.

After the ovens are filled, coking proceeds for 15 to 18 hr to produce blast furnace coke and 25 to 30 hr to produce foundry coke. The coking time is determined by the coal mixture, moisture content of the coal, rate of underfiring, and the desired properties of the coke. The coking temperatures generally range from 900° to 1,100° C and are kept on the high side of the range to produce blast furnace coke. Air is prevented from leaking into the ovens by maintaining a positive back pressure of about 10 mm water. The gases and hydrocarbons that are evolved during the thermal distillation are removed through the offtake main and sent to the by-product plant for recovery.

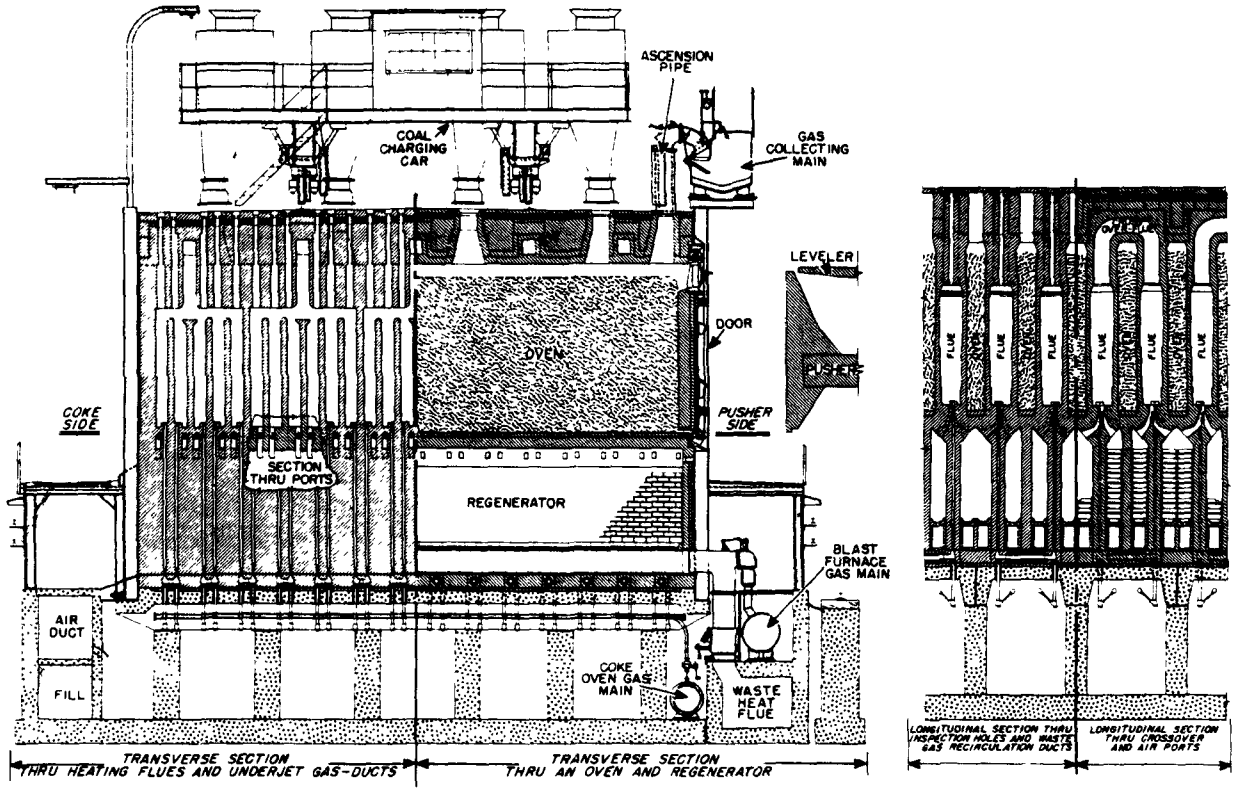

Figure 3-4. Transverse and longitudinal sections through Koppers-Becker underjet-fired low-differential combination by-product coke oven. (copyright 1971 by United States Steel Corporation)

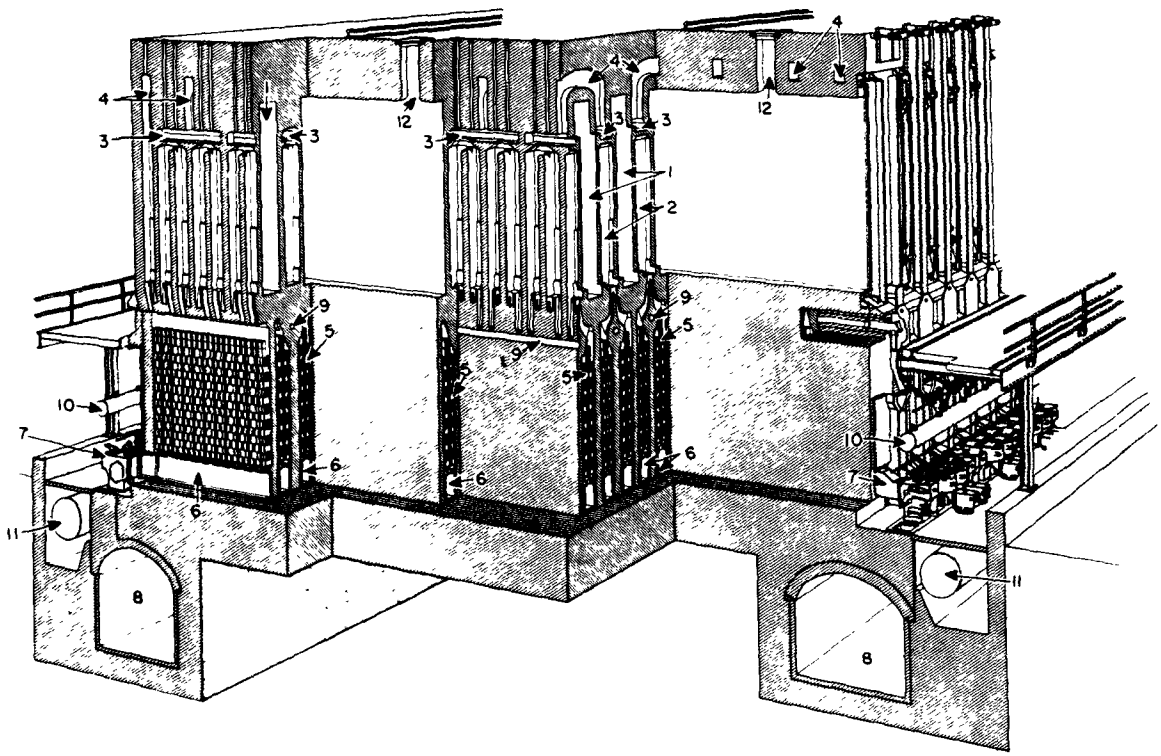

Figure 3-5. General perspective cut-away section of Koppers-Becker combination ovens with gun-flue heating facilities. 1. Oven chamber. 2. Vertical combustion flues. 3. Horizontal flues. 4. Cross-over flues. 5. Regenerators. 6. Oven sole flues. 7. Gas and air connections to waste-gas flue. 8. Waste-gas flues. 9. Gas ducts for coke-oven gas. 10. Oven gas main. 11. Blast-furnace gas main. 12. Charging holes. (copyright 1971 by United States Steel Corporation)

At the end of the coking cycle, doors at both ends of the oven are removed and the incandescent coke is pushed out the coke side of the oven by a ram which is extended from the pusher machine. This operation is illustrated in Figure 3-6. The coke is pushed through a coke guide into a special railroad car, called a quench car, which traverses the coke side of the battery. The quench car carries the coke to the end of the battery to a quench tower where it is deluged with water so that it will not continue to burn after being exposed to air. The quenched coke is discharged onto an inclined "coke wharf" to allow excess water to drain and to cool the coke to a reasonable handling temperature.

Gates along the lower edge of the wharf control the rate of coke falling on a conveyor belt which carries it to the crushing and screening system. The coke is then crushed and screened to obtain the optimum size for the particular blast furnace operation in which it is to be used.[7] The undersize coke generated by the crushing and screening operations is used in other steel plant processes, stockpiled, or sold.

3.2.3 By-Product Collection

Gases evolved during coking leave the coke oven through the standpipes, pass into goosenecks, and travel through a damper valve to the gas collection main which directs them to the by-product plant. These gases account for 20 to 35 percent by weight of the initial coal charge and are composed of water vapor, tar, light oils, heavy hydrocarbons, and other chemical compounds.

The raw coke oven gas exits at temperatures estimated at 760° to 870° C and is shock cooled by spraying recycled "flushing liquor" in the gooseneck. This spray cools the gas to 80° to 100° C, precipitates tar, condenses various vapors, and serves as the carrying medium for the condensed compounds. These products are separated from the liquor in a decanter (Figure 3-2) and are subsequently processed to yield tar and tar derivatives.[7]

The gas is then passed either to a final tar extractor or an electrostatic precipitator for additional tar removal. When the gas leaves the tar extractor, it carries three-fourths of the ammonia and 95 percent of the light oil originally present when leaving the oven.

The ammonia is recovered either as an aqueous solution by water absorption or as ammonium sulfate salt. Ammonium sulfate is crystallized in a

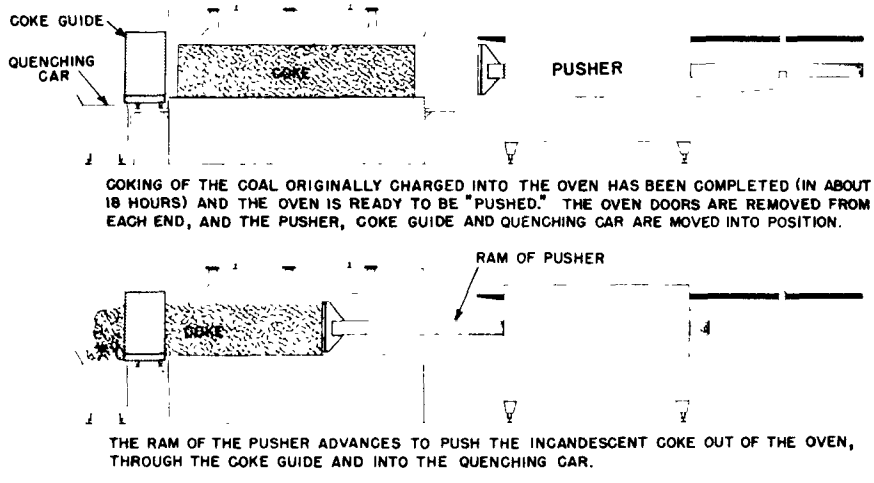

Figure 3-6. Schematic representation of the pushing operation. (copyright 1971 by United States Steel Corporation)

saturator which contains a solution of 5 to 10 percent sulfuric acid and is removed by an air injector or centrifugal pump. The salt is dried in a centrifuge and packaged.

The gas leaving the saturator at about 60° C is taken to final coolers or condensers, where it is typically cooled with water to approximately 24° C. During this cooling, some naphthalene separates and is carried along with the wastewater and recovered. The remaining gas is passed into a light oil or benzol scrubber, over which is circulated a heavy petroleum fraction called wash oil or a coal-tar oil which serves as the absorbent medium. The oil is sprayed in the top of the packed absorption tower while the gas flows up through the tower. The wash oil absorbs about 2 to 3 percent of its weight of light oil, with a removal efficiency of about 95 percent of the light oil vapor in the gas. The rich wash oil is passed to a countercurrent steam stripping column. The steam and light oil vapors pass upward from the still through a heat exchanger to a condenser and water separator. The light oil may be sold as crude or processed to recover benzene, toluene, xylene, and solvent naphtha.[7]

After tar, ammonia, and light oil removal, the gas undergoes a final desulfurization process at some coke plants before being used as fuel. The coke oven gas has a rather high heating value, on the order of 20 MJ/Nm^3 (550 $Btu/stdft^3$). Typically, 35 to 40 percent of the gas is returned to fuel the coke oven combustion system, and the remainder is used for other heating needs.

3.3 COKE OVEN CHARGING, TOPSIDE, AND DOOR EMISSIONS

Coke oven emissions consist of a yellow-brown gas which contains over 10,000 compounds as gases, condensible vapors, and particulates. The components that primarily concern public health include benzene and the other known or suspected carcinogens belonging to a class of compounds termed polycyclic organic matter (POM). POM, which condenses on fine particulates at ambient temperatures, consists of compounds with two or more fused rings. There are thousands of POM compounds which vary widely in physical and chemical characteristics. These potential pollutants are sometimes reported as benzene soluble organics (BSO) or by the quantity of a specific surrogate compound, such as benzo(a)pyrene (BaP). BSO is composed

of many compounds, some of which are not POM. Specific compounds found in coke oven emissions are discussed in the following sections for each emission point.

Coal tar, which is one of the constituents of coke oven gas, is an example of the many chemical compounds found in coke oven emissions. Coal tar consists of aromatic hydrocarbons that are characterized by a ring-type chemical structure and contain compounds such as benzene, naphthalene, anthracene, and their related homologues. The analysis of coal tar samples from both foundry and metallurgical coke facilities revealed an average BaP content of 0.51 percent with a range of 0.23 to 0.87 percent.[8]

Emission factors and emission rates for BSO from the four coke oven emission points are summarized in Table 3-4. A range of emission rates is provided because of the difficulty in sampling the fugitive emissions and the differences in reported values. These values are order of magnitude estimates for poorly-controlled batteries and are discussed in detail in the following sections. For this section, a typical battery is defined as having the following features: 62 ovens, 16.3 Mg of coal per oven, 18-hour coking cycle, double collecting main, and three lids per oven. The BSO emission rate for charging is based on a sample of uncontrolled charging emissions with about 3 to 5 min of visible emissions per charge. The lower emission factor for doors (0.13 kg/Mg of coal) is based on the typical battery with 30 percent of the doors leaking at an average rate of 0.2 kilogram of BSO per hour. The higher emission factor for doors (0.25 kg/Mg of coal) is based on actual measurements of door leaks collected by cokeside sheds. The emission factors for lid and offtake leaks are based on the typical battery with 20 to 40 percent of the lids and offtakes leaking at the minimum and maximum BSO rate. Emission estimates for well-controlled batteries are discussed in later sections for each emission point.

With the exception of charging, an uncontrolled condition is difficult to define for these sources because routine operations involve some degree of control. The emission factors for doors represent a range of about 30 to 75 percent leaking doors, while the emission factors for lids and offtakes represent about 20 to 40 percent leaking lids and offtakes. Any emission estimate for a specific battery should consider the number of leaking doors, lids, or offtakes and the range of emission rates given in Table 3-4.

TABLE 3-4. BSO EMISSION FACTORS FOR POORLY CONTROLLED COKE OVEN SOURCES

Source	BSO (kg/Mg of coal)	BSO emission rate
Charging[a]	0.05[9] to 0.55[10 11]	0.2 to 1.5 kg/min of emissions
Doors[b]	0.13 to 0.25[10 11 12]	0.2 to 0.7 kg/hr per leaking door[10 12]
Lids[c]	0.002 to 0.03	0.0033 to 0.021 kg/hr per leaking lid[13]
Offtakes[c]	0.002 to 0.02	0.0033 to 0.021 kg/hr per leaking offtake[13]

[a]For 3 to 5 minutes of uncontrolled emissions.

[b]For 30 to 75 percent leaking doors.

[c]For 20 to 40 percent leaking lids or offtakes.

A sample calculation is given below for a battery of 62 ovens with 30 percent of the doors leaking at an average rate of 0.2 kilogram of BSO per hour per leaking door.

Sample calculation:

$$\text{Number of leaking doors} = 62 \text{ ovens} \times \frac{2 \text{ doors}}{\text{oven}} \times 0.3 \text{ (fraction leaking)} = 37$$

$$\text{kg of BSO per year} = 37 \text{ doors} \times \frac{0.2 \text{ kg}}{\text{hour/door}} \times \frac{8{,}760 \text{ hr}}{\text{year}} = 64{,}800$$

For 16.3 Mg of coal per oven and an 18-hour cycle time, the coal usage would be:

$$\text{Mg of coal per year} = \frac{16.3 \text{ Mg of coal}}{\text{oven}} \times \frac{62 \text{ ovens}}{18 \text{ hr}} \times \frac{8{,}760 \text{ hr}}{\text{year}} = 492{,}000$$

Emission factor = 64,800 ÷ 492,000 = 0.13 kg of BSO/Mg of coal

Data on benzo(a)pyrene (BaP) for the different emission points vary by orders of magnitude for different emission tests. This variability may be caused by time into the coking cycle, temperature, type of coal, analytical techniques, or other differences between batteries. However, data that reflect the overall BaP content of coke oven emissions are available from

samples collected on the topside of batteries with both personnel dosimeters and ambient air samplers.

A study of coke oven emissions by Suta[1] reported that the BaP was generally 1 percent of BSO in the analysis of 1,440 airborne samples; this percentage was confirmed in two additional studies which included 14 and 12 samples. A statistical analysis of the data from these additional studies showed that the assumption of 1 percent of BaP in the BSO could not be rejected at the 0.05 significance level.[1]

3.3.1 Discussion of Visible and Mass Emissions

The emission of pollutants is generally characterized by both the concentration and the flow rate of the pollutant stream. This analysis of emissions is difficult to apply to coke oven doors, lids, offtakes, and charging. The rates of emissions for doors are highly dependent both on the time into the coking cycle and the gap size of the metal-to-metal seal. The rates of emissions for lids and offtakes are dependent on worker practice in applying luting mixtures, pressure fluctuations, and the gap size of the emission point. Charging emission rates are a function of time, pressure fluctuations, and gap size around the drop sleeves and the charging ports. The concentration of pollutants is also expected to vary with time, and there may be a variation of the concentration of POM from battery to battery caused by operating conditions and the coal type or blending practices. Even if the leaks were well characterized in terms of the size and length of the gap, there would be potential difficulties in assessing the flow rate of the pollutant. Measurement of the concentration of the POM above the coke battery is difficult because the concentrations are transient. The monitored particulate concentration would be a function of the location of the sampler, the existing wind conditions, and other emissions that may interfere.

The collection and measurement of fugitive coke oven emissions is further complicated by the fact that the gases which are emitted from the oven condense on metal surfaces present in any collection system used for the sampling device. These tars even condense on the hot oven jambs. This condensation can lead to erroneous results when the gases are carried through ducts before they reach the sampling device.

Mass emission measurements are not practical; therefore, regulatory agencies and coke oven operators have devised visible emission techniques to assess coke oven emission control. To measure the emissions from coke oven doors, lids, and offtakes, a method has been used whereby the emissions are characterized by percent leaking doors (PLD), percent leaking lids (PLL), and percent leaking offtakes (PLO). Charging emissions are characterized by the total time that visible emissions occur during charging of the oven. The coke oven has two main doors, one on the pusher side and the other on the coke side, three to five charging ports, and one or two offtakes connecting the oven with the collector main. The pusherside door has a smaller chuck door for the leveler bar at the top of the door.

The coke batteries are inspected and the number of doors, lids, and offtakes from which any emissions are observable is reported. These emissions are generally in the form of yellow-brown smoke. Although some of the luting produces a white, condensed water smoke upon drying, this is not considered as a leak. The percent leaking can be calculated by dividing the number of leaking doors, lids, or offtakes by the total number of each on the battery's operating ovens.

To measure visible emissions from charging, an observer records the length of time that visible emissions occur from the larry car and charging ports of an oven. These emissions may be continuous or intermittent, but only the time during which visible emissions occur is totaled. This method has advantages over an opacity reading which is a subjective evaluation by the observer on the level or concentration of the emission.

There are several advantages to using seconds per charge, PLD, PLL, and PLO as measures of emission control. Two advantages are that no special equipment is needed for the measurement and frequent use of these measurement methods can help identify control problems such as deviations from proper work practices and procedures.

Correlating visible emissions to mass emission rates is difficult for several reasons. Capture and measurement of mass emissions are complicated by the fugitive and transient nature of the visible emissions. Also, multiple sources of emissions are possible for each emission point. The mass emission rate for charging depends on the size and number of gaps, oven pressure, and the length of time that the emissions occur. If the

time of visible emissions from a specific oven (with a given pressure profile and specific number and sizes of gaps) is reduced, the total emissions from that oven would be reduced. Seconds of visible emissions are reduced by controlling the number and size of gaps and by removing the emissions through the steam aspiration system, which affects the oven pressure during the charge. A reduction in mass emissions is expected from a reduction in visible emissions because control of visible emissions is accomplished by controlling those factors which influence mass emissions.

The control of percent leaking doors is also accomplished by controlling those factors that directly affect mass emissions. Most doors are self-sealing, i.e., gaps are plugged in stages by the condensation of tar from the escaping coke oven gas. Doors have the greatest tendency to leak immediately after charging when the oven pressure and gap size are greatest. Reports from U.S. Steel's research division[14] state that the average PLD is linearly proportional to the average sealing time:

$$PLD = \frac{T_s}{T_c} \times 100 \qquad (1)$$

where:

PLD = percent leaking doors,
T_s = average sealing time of each door (hours), and
T_c = gross coking time (hours).

For example, an average sealing time of 1.8 hours after charging would be necessary for a battery to maintain 10 PLD for an 18-hour coking cycle. Because of the linear relationship between PLD and T_s, a reduction in the average sealing time will decrease the percent leaking doors by a proportional amount. If the average door sealing time for a battery is reduced, one would expect a reduction in total mass emissions because the average door leaks for a shorter time. From the previously discussed example, a battery on an 18-hour cycle would have an average sealing time of 3.6 hours if 20 percent of the doors were leaking.

The U.S. Steel report also states that sealing time is proportional to oven pressure and gap size. The proportionality is with the square root of the pressure drop or linearly with the cross sectional area of the gap.[14] Mass emissions depend on oven pressure, gap size, and number of gaps; therefore, reducing either the oven pressure or gap size reduces the mass emissions, sealing time, and percent leaking doors.

A closer examination of the door sealing mechanism reveals why percent leaking doors is not necessarily linearly proportional to the mass emission rate. A battery with poorly maintained doors may have door seals with gaps that are too large to seal (for example, from "hits" when the seal is nicked or damaged from improper door handling) or the seal may have many gaps from hardened deposits as a result of poor door cleaning. Then these poorly maintained doors (as measured by percent leaking doors) would have a higher emission rate of pollutants in kilograms per hour per leaking door than a better maintained battery with few "hits" and fewer gaps. The implication is that a shorter average sealing time results in a lower PLD; therefore, the gaps are smaller (i.e., they seal more quickly) and the emission rate of kilograms per hour per leaking door is less.

Visible emissions for topside leaks are expressed as the percent of leaking lids or offtakes; this is directly related to the number of leaking lids or offtakes. If the number of leaking lids and offtakes is reduced by sealing the emission point, then the mass emission rate would be reduced.

3.3.2 Wet-Coal Charging Emissions

When coal is introduced into the incandescent oven, the large volume of steam, gases, and smoke that forms is forced from the oven by the increasing pressure of the expanding gas volume within the confines of the oven. The steam is the result of the naturally occurring moisture in the coal and any water added during the grinding operations. Gases are generated by the volatilization and reactions of the volatile components of the coal and any oil that may have been added to the coal. The smoke is a combination of fumes evolved with these gases and any particulate that may be entrained by them. As the expanding gas volume increases pressure in an oven, emissions will flow at high velocity from any openings. Figure 3-7 depicts a coke oven top side with the larry car in charging position. Emissions can occur from the three to five charging ports, the feed hoppers, the one or two ascension pipes, the standpipe caps, and the collecting main. The charging ports in an oven are open for only a relatively short period for each charge; however, ovens are charged sequentially and the collective effect is a major source of emissions.

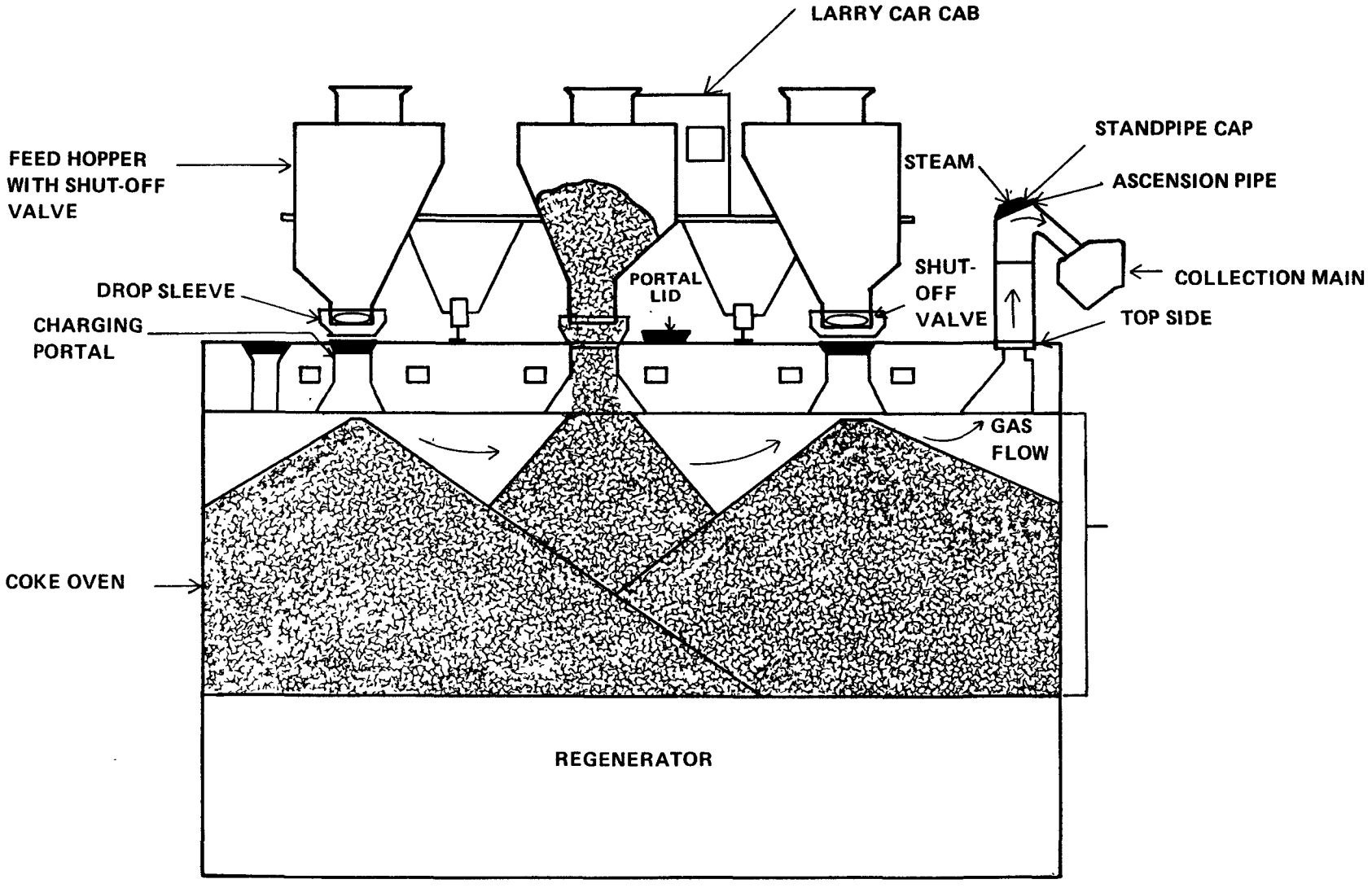

Figure 3.7. Schematic of coke oven topside.

3.3.2.1 Emission Sources and Pollutants. Particles emitted during the charging cycle have been identified as coke balls, pyrolitic carbon, high-temperature coke, char, coal, mineral matter, and fly ash.[15 16] Particulate samples collected at one plant showed an average of 57 percent tar.[9] For the purpose of this discussion, it is assumed that the quantity of tar is approximately equal to the quantity of BSO. Analysis of the tar from portions of the samples showed from 260 to 18,000 ppm (by weight) benzpyrene, which includes 3,4 benzpyrene (benz(a)pyrene). Other polycyclic organic compounds identified as being present in the samples were:

- benz(c)phenanthrene,
- benz(a)anthracene,
- a benzfluoranthrene isomer, and
- cholanthrene.

These compounds are known or suspected to be carcinogenic. The fact that carcinogenic compounds are emitted from coke ovens has been well documented.[1 17]

The distribution of particle sizes of the particulate emissions shows two distinct size groups.[9] The finer particles (47 percent of the total) have a mass mean diameter of 8.5 μm, and the larger particles have a mass mean diameter of 235 μm. The tar portion of the particulate was found primarily with the finer particles.

Table 3-5 shows the results of an analysis of gaseous pollutants measured at one plant.[9] Another source separates the gaseous emissions into the following categories: nitrogen, nitrogen oxides, methane, hydrogen, carbon monoxide, carbon dioxide, polynuclear aromatic hydrocarbons, and coal tar pitch volatiles.[18]

3.3.2.2 Emission Estimates for Uncontrolled Charging. For this type of fugitive emissions source, collection of representative emission samples is extremely difficult and, consequently, very little data on mass rates are available. Few quantitative measurements for POM or BSO are available. However, a compilation of available data on particulate emissions and the results of one test that shows the percent BSO in charging emissions are available. Estimated emission factors in the literature vary by at least one order of magnitude, and the accuracy of the emission factor should be judged according to this variation.

TABLE 3-5. GASEOUS POLLUTANTS FROM CHARGING[9]

Pollutant	Standard cubic meters per charge[a]	Standard cubic feet per charge[a]	Maximum concentration (ppm)
Total hydrocarbons	0.96	34	
Carbon dioxide	0.83	29	
Carbon monoxide	0.50	17	
Nitrogen oxides	0.0031	0.11	
Sulfur dioxide			232
Hydrogen sulfide			42
Methane			4
Ammonia			130
Phenol			31
Cyanide			16

[a]Fourteen megagrams (15 tons) of coal per charge.

With the assistance of the American Iron and Steel Institute, EPA has compiled and analyzed data on particulate emissions from iron and steel mills to assist in the definition of particulate emission factors for each process. This study suggests an emission factor for uncontrolled charging of .25 to .75 gram of particulate per kilogram (0.5 to 1.5 lb/ton) of coal charged.[19]

A test was conducted for EPA by Mitre Corporation at J&L Steel, Pittsburgh, to compare the American Iron and Steel Institute (AISI) larry car with a conventional Wilputte larry car.[9] Samples were collected by putting enclosures around the Wilputte larry car drop sleeves and evacuating the emissions through a stack where they could be sampled. The samples were collected with an Anderson impactor or a cyclone and glass filter, followed by impingers in an ice bath. Isokinetic conditions could not be maintained because of a high variability in the flow of emissions. The reported particulate measurements represented composite samples from different emission points. The particulate catch averaged 815 g/charge, or about 0.05 gram of particulate per kilogram of coal (0.1 lb/ton) from tests of 10 charges with an average sampling time of 3.5 min.

Reliable results for total organic emissions were not obtained from this test, but the percent BSO and some indication of the BaP content were obtained. The average amount of BSO measured (excluding the impinger catch) was 57 percent. The impingers averaged 96 percent of the mass collected in the front of the sampling trains and contained an average of 60 percent BSO.[9]

The particulate emission factors were combined with these results to calculate a BSO emission factor. The particulate emissions are based on particulate captured by the filter and do not reflect the BSO collected in the impingers.

$$\begin{aligned}\text{Total BSO} &= \text{BSO in particulate} + \text{BSO in impingers} \\ &= 0.57 \times \text{particulate} + (0.96)(0.60) \times \text{particulate} \\ &= 1.1 \times \text{particulate}\end{aligned} \qquad (2)$$

The estimate of BSO emissions from the test at J&L Steel would be 1.1×815, or about 900 g/charge from 3.5 minutes of visible emissions (0.055 gram of BSO per kilogram of coal).

Data on organic emissions from Russian and Czech coke plants have also been reported.[20] The values reported as aromatic hydrocarbons or tar range from 0.0005 to 0.1 g/kg of coal (0.001 to 0.2 lb/ton of coal). Mass emissions of particulate reported with these values were far below the 0.25 to 0.75 g/kg of coal particulate emission factors discussed previously. For this reason, the BSO emission factor calculated above (0.055 to 0.55 g/kg of coal) is judged to be more realistic than the values reported from the Russian and Czech plants.

The data on BaP emissions from which the percent BSO was obtained are not sufficient to allow calculation of an emission factor. Only selected portions of some samples were analyzed for BaP. The results varied considerably; there were values up to 3,000 and one value at 18,000 µg/g of BSO reported.[9] For 12 of 19 samples, the BaP concentration was below detectable limits which varied from 220 to 1,400 ug/g of BSO depending on the sample size. If the portion of the sample analyzed is assumed to be representative of the entire sample, the six positive results (excluding the one high value) are equivalent to 2.8×10^{-4} to 17×10^{-4} grams of BaP per kilogram of coal charged (5.6×10^{-4} to 33×10^{-4} lb/ton).

3.3.2.3 Emission Estimates for Controlled Charging. The previous section discussed emission factors for uncontrolled or poorly-controlled charges which generally have dense clouds of emissions. During observation of charges controlled by the stage charging operating procedure, EPA observers noticed that on good charges (a small duration of visible emissions), the emissions were generally small wisps or puffs which drifted from around the drop sleeves on the larry car. For charges where the duration was longer, the emissions changed to clouds of smoke which escaped to the atmosphere with higher velocities. Generally, the longer the duration, the more large clouds and fewer wisps were seen. The mass in 40 seconds of wisps is probably about twice that of 20 seconds of wisps; consequently, 40 seconds of mixed wisps and clouds must be more than twice the mass of 20 seconds of only wisps. Therefore, assuming a linear reduction from uncontrolled emissions based on the time of visible emissions would overestimate the mass in puffs or wisps from a well-controlled charge.

For charging, the frequency of wisps of visible emissions can be compared to the frequency of heavier emissions by relating the time when any visible emission was observed to the time when emissions exceeded 20-percent opacity. (Opacity is a crude indicator of the concentration of pollutants.) Figure 3-8 illustrates the differences in the results obtained when only emissions greater than 20-percent opacity are recorded in comparison to recording all visible emissions. Little difference occurs in the two methods for charges where high levels of emissions are recorded (greater than 25 seconds in duration where the difference between the methods is less than 5 percent). However, for charges where less than 25 seconds are recorded for all visible emissions, the difference between the two methods is very significant. For example, the variance between the two methods is 21 percent for 15 seconds of emissions, but the variance increases to 47 percent for 5 seconds of emissions.

A mathematical model was developed to estimate controlled charging emissions from the uncontrolled emission factors.[21] The model assumes:

- Turbulent flow of the emissions out of the oven,
- A cyclic variation that can be represented by a sine wave and occurs in the mass rate of gas generated during charging,

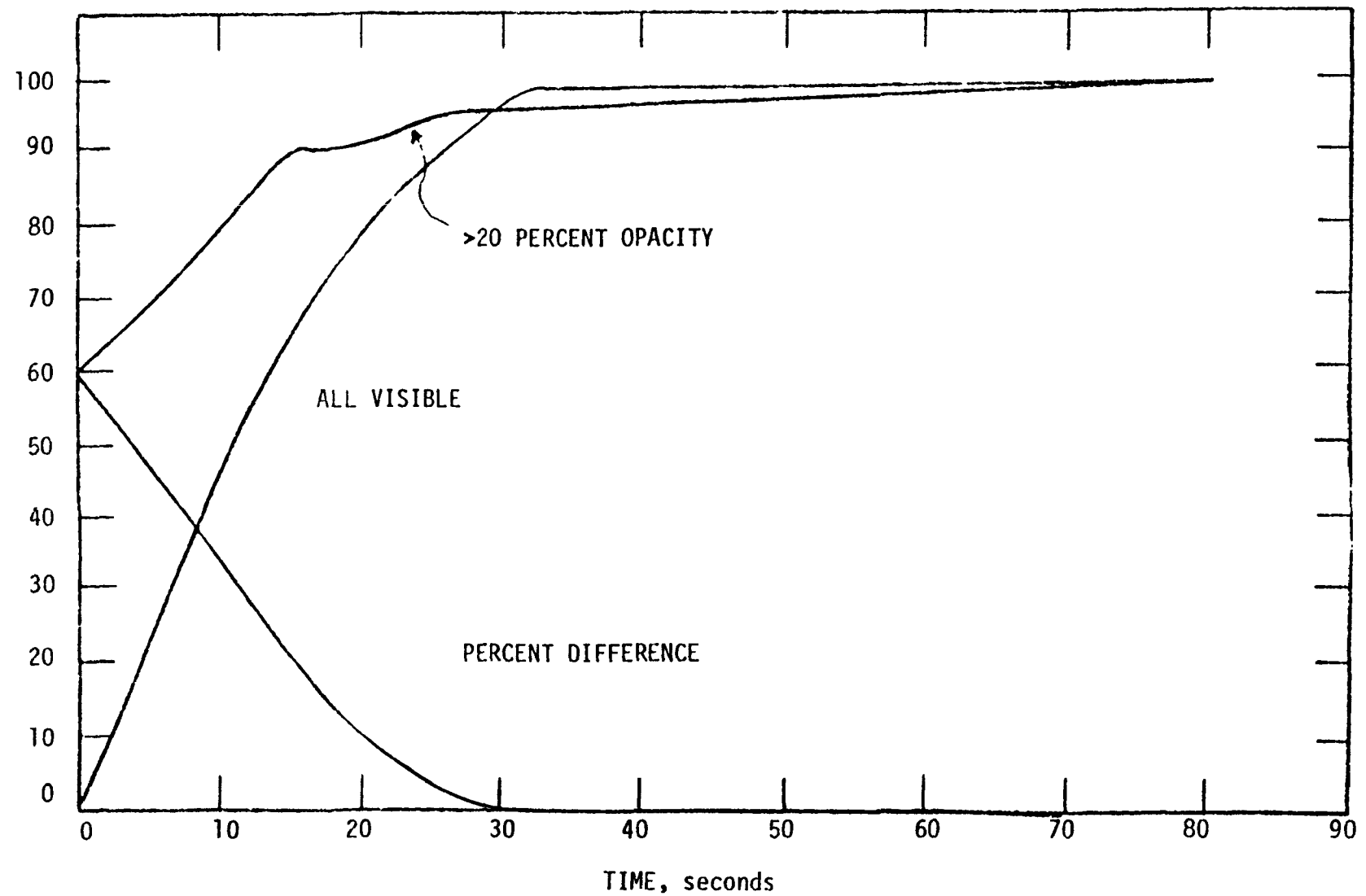

Figure 3-8. Comparison of results between recording only visible emissions greater than 20 percent opacity and recording all visible emissions (U.S. Steel, Clairton).

- A constant rate of aspiration, and
- Similar battery conditions, such as the size of the opening through which the pollutant escapes.

This model predicts that mass emissions are proportional to the square of the time of observed emissions. The model contains many limitations and assumptions which may not apply to a specific battery; however, the model is used only as a tool to provide a reasonable upper bound on estimates of controlled charging emissions.

The discussion of controlled charging emissions stated that an exponential reduction in mass emissions with respect to seconds of visible emissions occurs when the nature of the emissions change as control improves. Poorly controlled charges have been characterized as dense clouds of emissions that escape at relatively high rates from several different emission points; however, visible emission readings represent only the total time that emissions occur and do not account for differences in the density of emissions, the mass emission rate, or the number of emission points. When emissions are controlled on the order of 30 seconds or less, the emissions have been characterized as wisps or puffs that are emitted through fewer emission points. Figure 3-8 provides additional support for this observation. For roughly 30 seconds or more of emissions, essentially all of the visible emissions have an opacity of 20 percent or more. For visible emissions that are less than 30 seconds per charge, the percent of total emissions greater than 20-percent opacity decreases as the seconds of emissions decrease. Therefore, improved control results in both a decrease in duration and a decrease in density (or mass rate), which suggests an exponential reduction in mass with respect to seconds of emissions.

Because the only data available were for uncontrolled charges, the mathematical model was applied to these single-point estimates of mass emissions. An uncontrolled charge cannot be defined precisely in terms of visible emissions; however, most observers would agree that visible emissions occur on the order of minutes per charge throughout the 4- to 6-minute charging period. Two crude estimates are available for uncontrolled charges: 7,500 g/charge for an estimated 5 minutes of emissions and 900 g/charge from sampling emissions for 3.5 minutes. The exponential model (exponent = 2) was applied to each of these data points to give the two exponential curves,

labeled Exponential A and B, in Figure 3-9. The model results are tabulated in Table 3-6. The two exponential models predict that 8 to 33 grams of BSO escape when 20 seconds of visible emissions are observed.

The model labelled Exponential A is recommended as an upper bound estimate to estimate charging emissions controlled in the range of 11 to 30 seconds per charge. This approach is designed to avoid grossly overestimating the mass emissions in a well-controlled charge that would result if a linear model was used to extrapolate from the uncontrolled data points. In addition, a linear reduction in mass with respect to duration would not account for the observed transition in the nature of charging emissions as control improves.

Little data are available to establish an absolute minimum estimate for small wisps of emissions from a single drop sleeve with one small gap. Data are available from tests of topside leaks with 1- to 2-meter plumes originating from a single gap.[13] Extrapolation of charging emissions from the topside test results is difficult because the sampling was conducted 1 hour after charging and differences may be expected in emission composition, oven pressure, and coal temperature. In addition, charging emissions may escape from more than one gap or more than one drop sleeve. The industry has argued and our visible emissions data base has confirmed that even the best-controlled batteries occasionally have a poorly controlled charge. Because many of these factors tend to increase the estimate of controlled charging emissions, the topside leak test of a 1- to 2-meter plume should provide a reasonable absolute minimum estimate.

Although the transition in mass emissions from uncontrolled to controlled charging is apparently exponential, additional decreases in controlled emissions may have a linear relationship with the visible emission time. For example, a linear relationship would be expected when the time of visible emissions is the cumulative total from a series of puffs that are similar in size and duration. The minimum estimate previously discussed represents a linear model in which the measured emission rate is constant and the decrease in mass results only from a decrease in the duration of the emissions. The results of this attempt to place reasonable bounds on estimates of well-controlled charges (11 to 30 seconds per charge) is

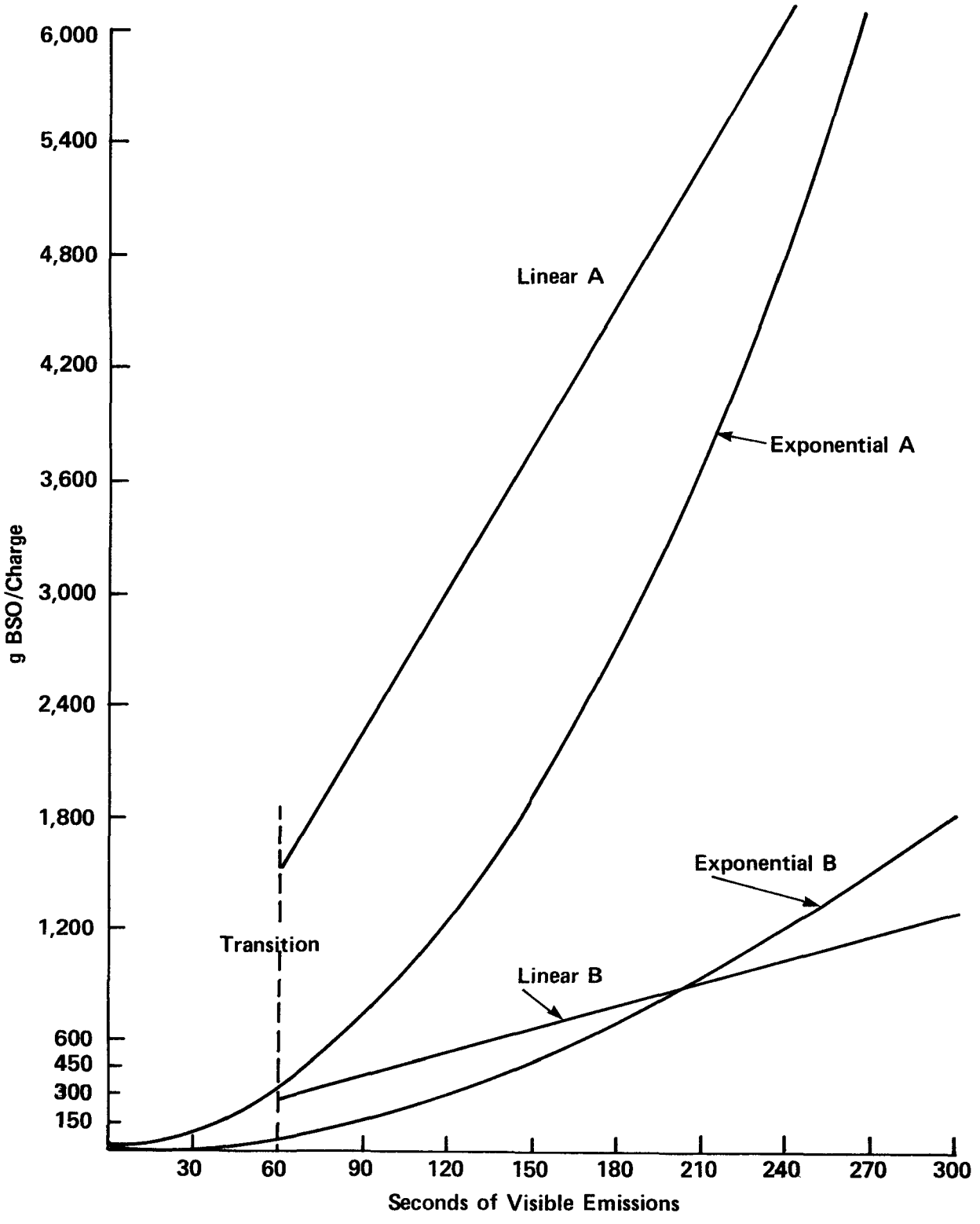

Figure 3-9. Comparison of charging emissions models.

TABLE 3-6. ESTIMATES OF CONTROLLED CHARGING EMISSIONS (g BSO/charge)

Seconds of visible emissions	Exponential A[a]	Exponential B[b]	Linear-wisps[c]	Linear A[a]	Linear B[b]
300	7,500[a]	1,840	NA	7,500[a]	1,300
240	4,800	1,200[b]	NA	6,000	1,030[b]
210	3,700	900[b]	NA	5,300	900[b]
180	2,700	660	NA	4,500	770
150	1,900	460	NA	3,800	640
120	1,200	290	NA	3,000	510
90	680	170	NA	2,300	390
60	300	73	NA	1,500	260
Transition					
30	75	18	0.18	NA	NA
25	52	13	0.15	NA	NA
20	33	8	0.12	NA	NA
15	19	5	0.09	NA	NA
10	8	2	0.06	NA	NA

NA = Not applicable.

[a]Based on 0.5 kilogram per megagram of coal, 15 megagrams of coal per oven, and 5 minutes of emissions throughout the charge.

[b]Based on an estimated 900 grams of BSO from 3.5 minutes of sampling.[9]

[c]Based on the measured rate of 0.021 kilogram of BSO per hour (0.006 g/s) for a 1- to 2-meter plume.[13]

illustrated in Figure 3-10. The upper bound for these controlled estimates is Exponential A and the absolute minimum is the linear "wisp" model. The wide range between these two bounds reflects the uncertainty in estimates of controlled charging emissions.

The discussion of emission estimates for well-controlled charges focused on the range of about 11 to 30 seconds per charge and the use of an exponential upper bound and a linear "wisp" model for the lower bound. The basis for these estimates is the judgment that the density and mass flow rate of the emissions decrease as control improves. However, mass emission reductions outside of the transition region may be linearly related. The plausibility of a linear model for a very low level of emissions was discussed. A linear model may also be appropriate for higher levels of emissions for various degrees of poor control. For example, consider a battery with an average control performance of 60 seconds per charge that is improved to 30 seconds per charge. If the oven pressure, gap sizes, and number of emission points are similar for the two cases, the mass flow rates of emissions for the two cases are likely to be similar. Then the reduction in mass is directly proportional to duration and yields a linear 50-percent reduction for the example.

The results for a linear model applied to the two uncontrolled estimates are shown in Table 3-6 and Figure 3-9 for comparison with the exponential models. Results for the two linear extrapolations are not presented for visible emissions less than 30 seconds in duration because of the expected exponential reduction from a decrease in density and flow rate. Conversely, extrapolations of the "wisp" linear model are not presented for visible emissions greater than 30 seconds because of the expected exponential increase in emissions as they change in nature from wisps to dense emissions. The linear models may be more appropriate for estimating emissions and emission reductions for those batteries that are not well controlled and that have occasionally dense emissions of long duration.

3.3.2.4 Factors Affecting Emissions from Charging. Uncontrolled emissions from charging cause large visible clouds of smoke and fumes. Figure 3-11 shows a typical uncontrolled charge; occasionally the visible emissions almost completely obscure the larry car. If the emissions are uncontrolled, they may exist from the time that the coal starts to flow

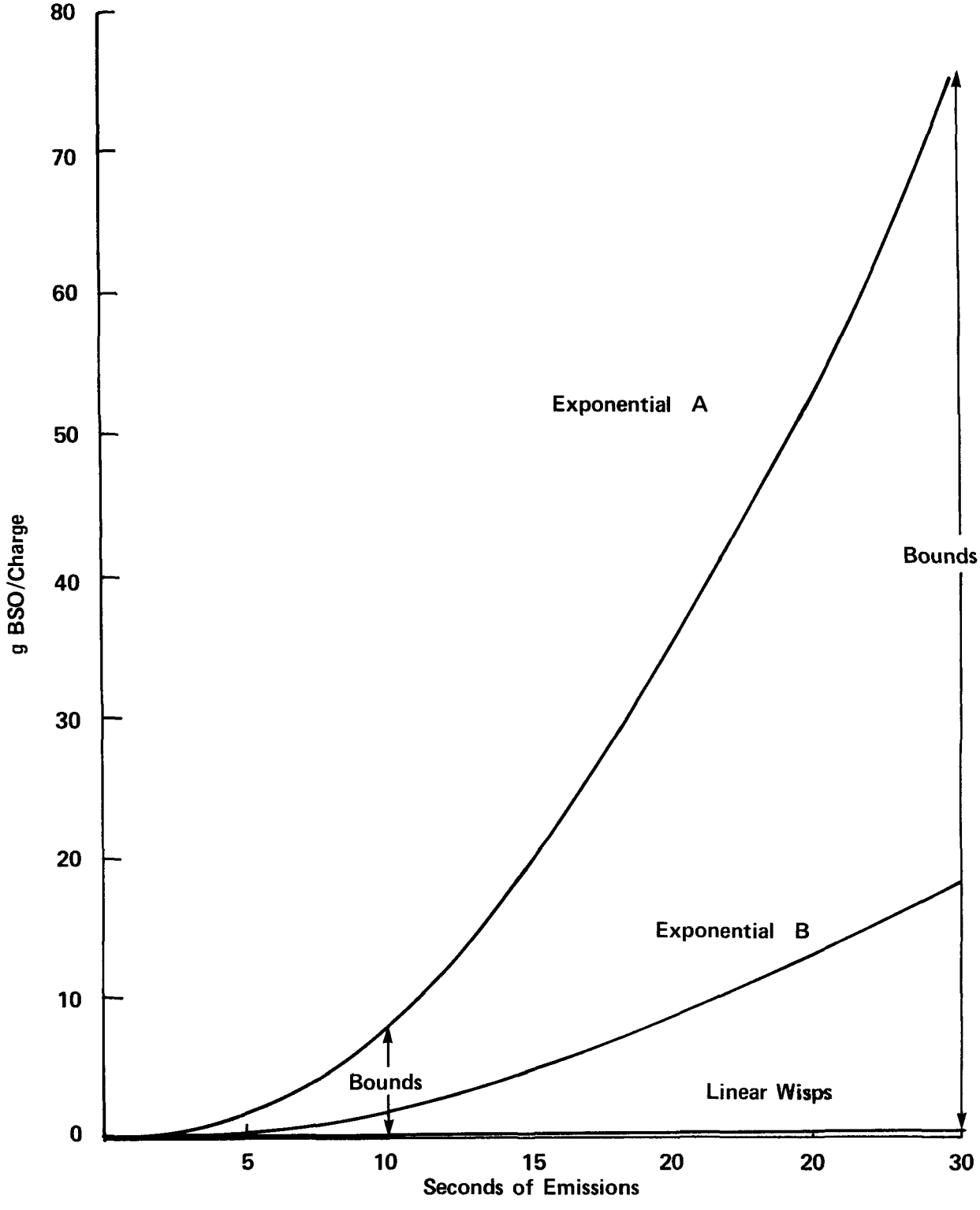

Figure 3-10. Estimates of controlled charging emissions.

Figure 3-11. Uncontrolled charge.

into the oven until the charging port lids are replaced--a period of about 3 to 5 min.

Many variables can potentially influence the quantity of emissions during charging. (The effect of these variables on the control of emissions is discussed in Section 4.3.1.) Data are not available to quantify the effects of these variables; however, the possibilities can be discussed. A higher volatile content of the coal or the addition of more oil to the coal would probably result in a greater volume of gases and fume (more emissions) generated in the oven as these components decompose. More moisture in the coal will also add to the volume of gases (as it is converted to steam) in the oven. This extra volume tends to force emissions into the atmosphere more rapidly. On the other hand, high moisture may retard the rate at which the temperature of the coal increases, because evaporation of the water absorbs a considerable amount of heat. At lower temperatures, the coal volatiles and oil will decompose more slowly; this results in slower gas generation and less emissions.

The fineness of grind, which determines the size of the coal particles, may be another factor that affects the emission rate. Finely ground coals should have a greater tendency to be entrained in the effluent gases and carried out of the oven than coarser ground coals. Also, the finer coal may volatilize faster and generate more gas in a short time.

3.3.3 Coke Oven Doors and Their Emissions

Coke oven doors are both functionally and structurally important parts of a coke battery. During the coking cycle, the door (1) minimizes heat loss, (2) seals the oven to prevent gas loss in the early part of the cycle and prevent air infiltration in the latter part of the cycle, (3) holds the coal mass in the oven during charging, and (4) allows the operator to level the coal charge in the oven.[22] Figure 3-12 is a vertical cross-section sketch of a door in place on an oven. The buckstay and jamb provide the structural support that maintains the integrity of the oven brick across the width of the battery. This section will describe the coke oven doors in more detail and discuss the pollutants that are emitted from coke oven door leaks.

3.3.3.1 Facility Description. Coke is produced in slot ovens that are typically 11 to 16.8 m long, 3 to 6.7 m high, and 0.35 to 0.5 m in

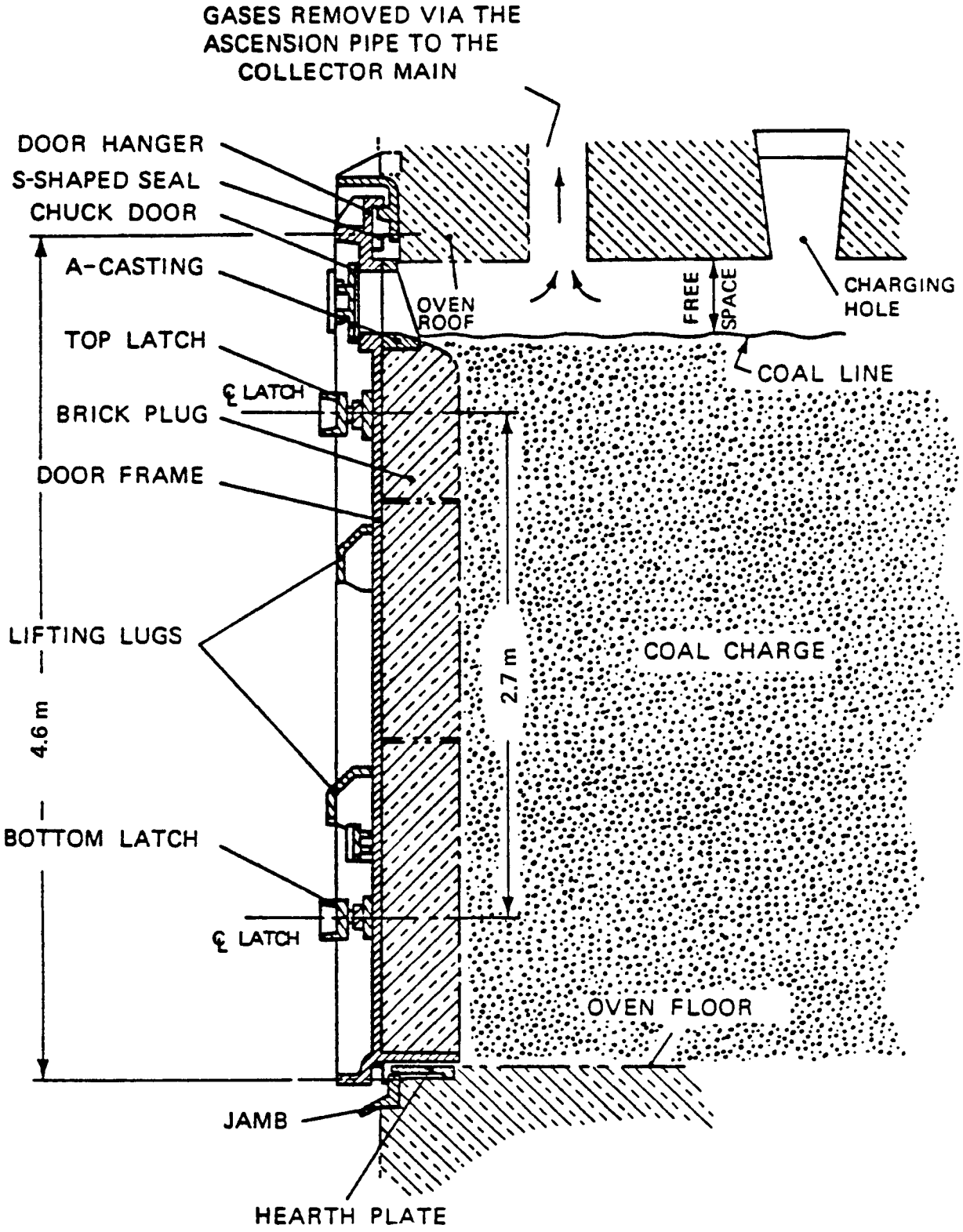

Figure 3-12. Vertical cross section of coke oven door on pusher side of oven.[22]

width. The most recently built batteries are the large size with ovens 6 m in height. Each slot oven in a by-product coke battery has two doors which serve as end closures for the oven. The door is constructed with a special refractory plug on a cast iron or fabricated steel frame that is 3 to 6 m long. The typical door may weigh from 3.6 to 7.3 Mg. Figure 3-13 shows an outside view of a coke oven door. More detail is provided in Figure 3-14 which illustrates a vertical cross section of a door in place on the oven.

Two basic types of seals are used to control the leakage of pollutants from gaps between the door and the door jamb. The most common type is a self-sealing door which has a seal in the form of a flexible S-shaped metal band or rigid knife edge (Figure 3-15) around the periphery of the door. It is termed "self-sealing" because it relies on gaps being sealed by the condensation of tars in the escaping gas. Other doors are sealed (hand-luted) by troweling a luting mixture into a V-shaped opening between the metal door frame and the roll-formed steel shape on the end of the ovens. Koppers and Wilputte are the two major manufacturers of self-sealing doors in the United States. A distribution of batteries by manufacturer is provided in Table 3-7 from a recent listing of 222 batteries.[24]

The oven's door jamb is a complex, rigid, one-piece shape made of gray cast iron or ductile cast iron. The door jamb is attached to the end of the oven by connecting it to a bolting plate that is held in place behind the buckstay, or by bolting the jamb behind the buckstay. The buckstay is a wide flange beam that is flush with the brickwork on each vertical side of the oven and provides the required support (compression) for the oven refractory and regenerator walls.

TABLE 3-7. TYPES OF OVENS IN CURRENT USE[24]

Type	Percent of batteries
Wilputte	25.2
Koppers	22.5
Koppers-Becker	44.1
Other	8.2

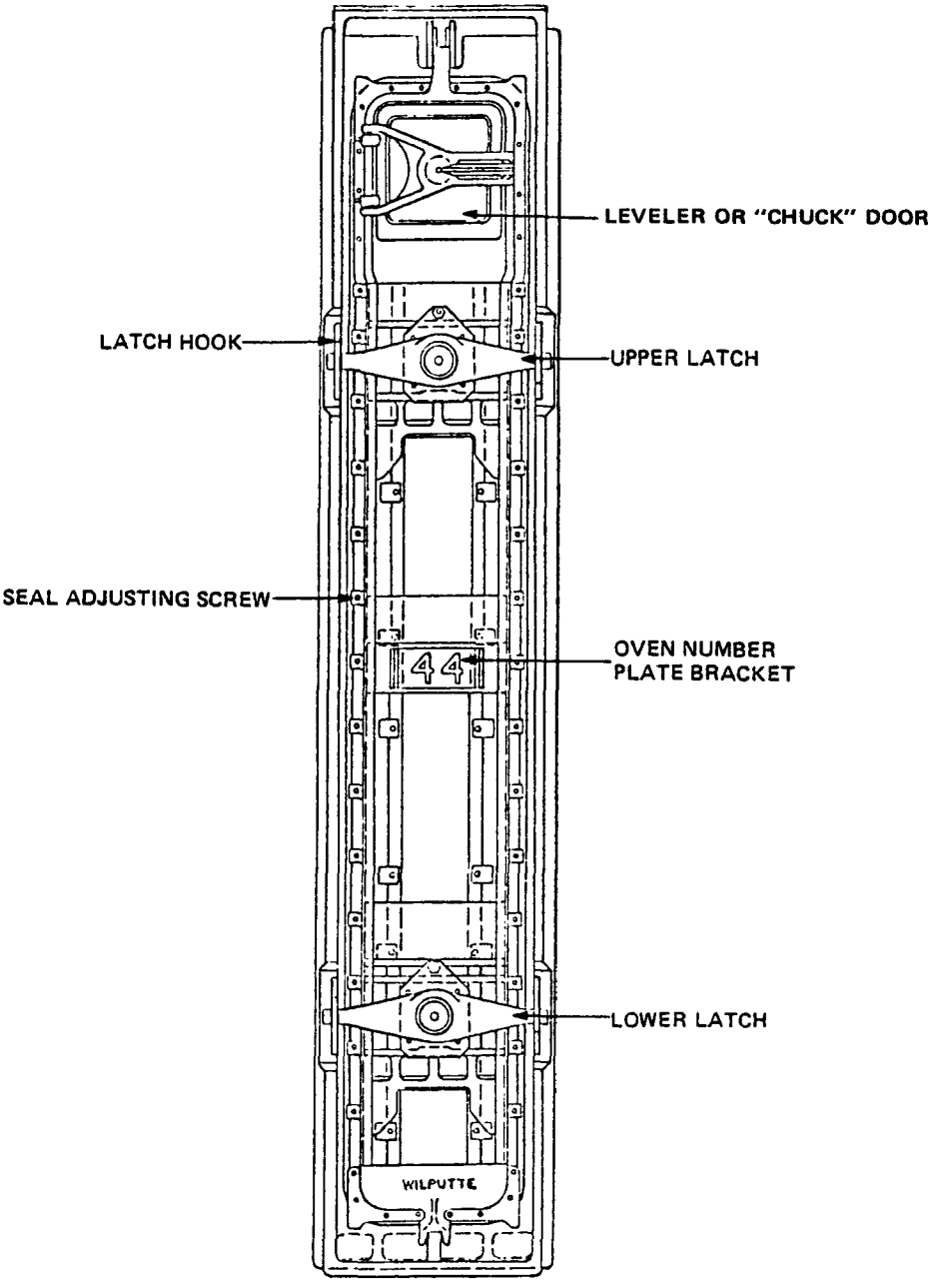

Figure 3-13. Outside elevation of a pusherside coke oven door.[23]

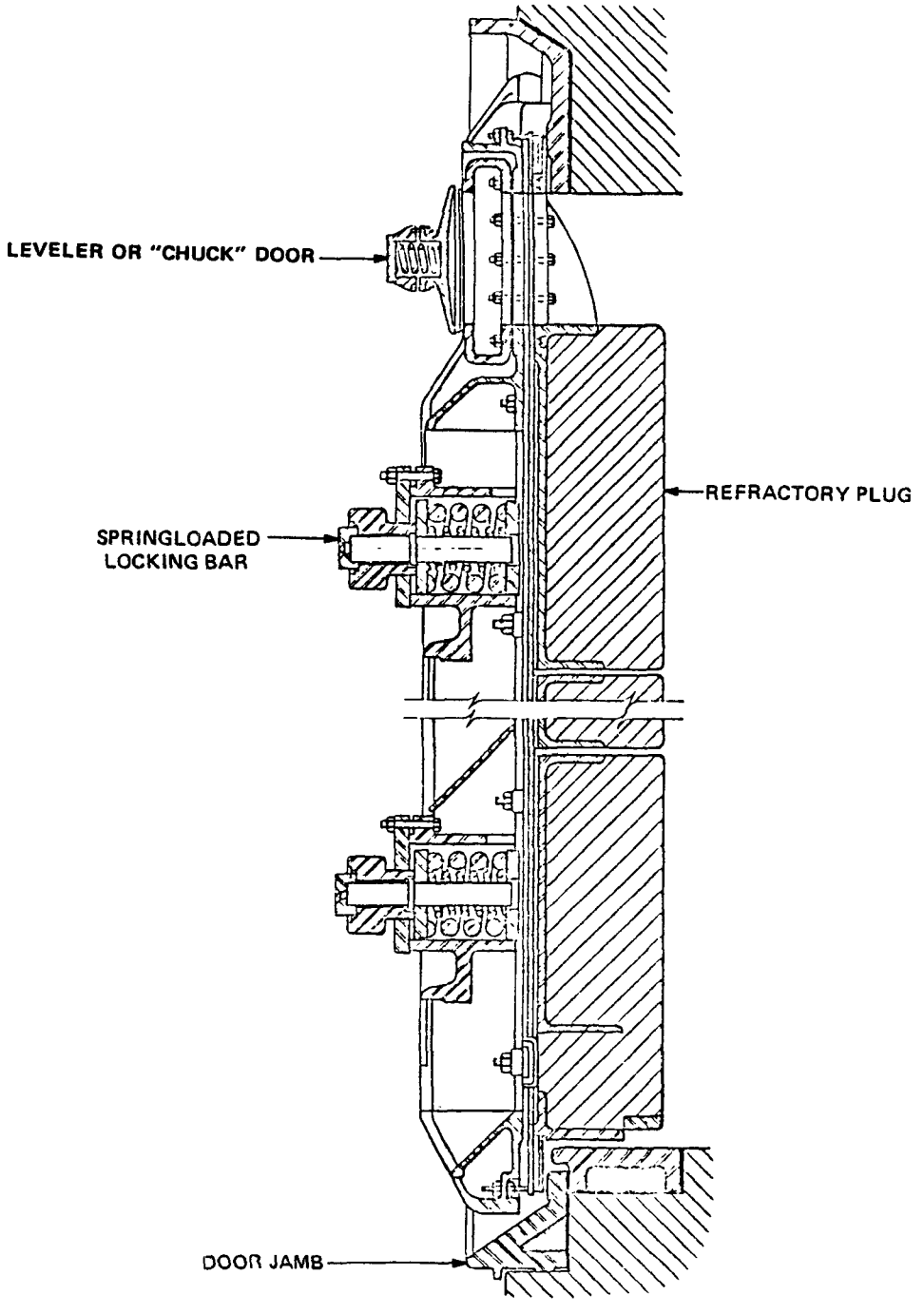

Figure 3-14. Vertical cross section of a pusherside coke oven door.[23]

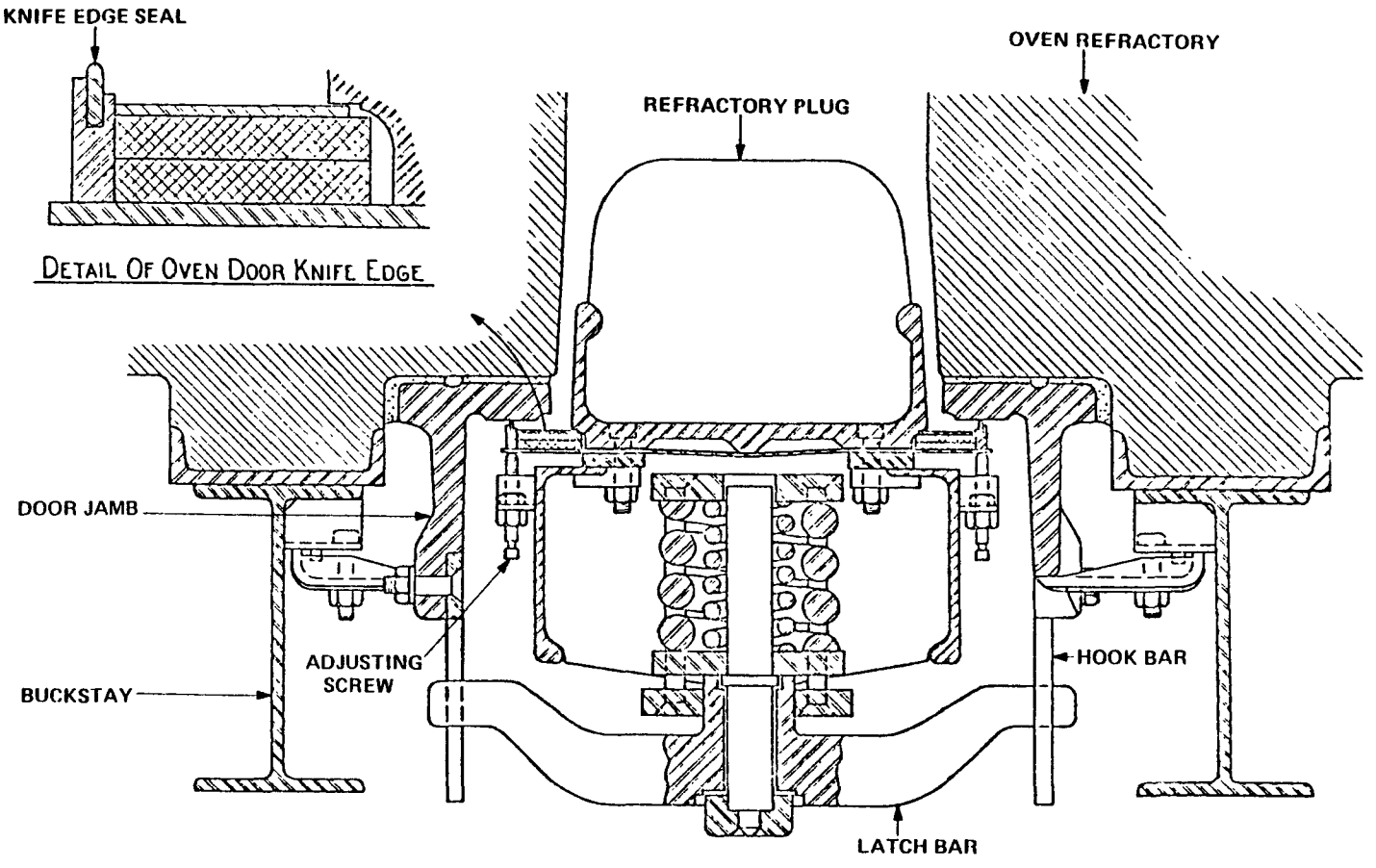

Figure 3-15. Horizontal cross section of a coke oven door.[23]

There are two types of door latch mechanisms. The first is the gravity type which consists of bars which drop or swing into wedge-shaped latch hooks. The second is the screw type (Figure 3-15) in which a screw forces the door against the jamb or compresses a spring, which in turn forces the door against the jamb. The gravity type latch is generally found on older batteries, whereas the screw latch is found on newer batteries.

Door extracting machines are operated on rails on both the pusher side and coke side of the battery. On the pusher side, the door extractor may be a part of the pusher machine or a separate, self-propelled device. The door machines remove and hold the door during the pushing operation, and then they reattach the doors after pushing, before the empty oven is recharged. They are either electrically and/or hydraulically operated from an elevated cab that contains all the controls. The head of the extractor on door machines for the screw type latching contains a mechanism for latching the doors and compressing the loading springs. This mechanism is motor driven and usually cuts off at a preset load by means of a current limiter to the drive motor. Door removal occurs at a relatively slow speed and is easily controlled to allow accurate door alignment and to avoid damaging the door's sealing edge.[7]

The pusherside door has a small door at the top called the leveler or chuck door (Figures 3-13 and 3-14). A leveling bar enters through the chuck door to level peaks of coal formed during charging, thereby clearing the space at the top of the oven to allow gases to escape to the collecting mains. The chuck door is also an emission source for coke oven gas.

To start the coking cycle, the oven is charged with coal from the top of the oven by a larry car. A leveling bar from the pusher car enters the oven through the chuck door and levels the peaks of coal that form under the charging holes. At the end of the coking cycle, the doors on both sides are removed, and the coke is pushed with a ram from the pusher side out of the oven into a quench car on the coke side. Usually, the door and jamb are cleaned, and the doors are replaced and adjusted. At batteries that use hand luting, the door is sealed with a luting mixture before charging.

3.3.3.2 Emission Sources and Pollutants. Door leak emissions are fugitive in nature and can occur at any point on the perimeter of the door where a gap exists between the door and the door jamb. Another emission source is the small leveler or chuck door on the pusherside door.

The gas that escapes from coke oven doors contains many chemical compounds. Hydrogen and methane are the major constituents, as listed in Table 3-8. Some of the minor constituents are listed in Table 3-9.[25] The components listed in these tables are averages; the constituents of door leak emissions vary widely and depend upon the time into the coking cycle.

The fugitive nature of door leaks has posed collection and sampling problems that were discussed in detail in Section 3.3.1. EPA attempted to measure emissions from a coke oven door by positioning a collection hood over a leaking door.[26] Their data showed a mass emissions rate of 0.06 kilogram of particulate per hour from a single door during the first hour of the coking cycle. This rate dropped to less than 6×10^{-5} kg/hr during the latter portion of the cycle. The flow rate of gas from the door was 99 m^3/hr initially and dropped to 39 to 54 m^3/hr for the rest of the cycle. Interpretation of other analytical results was difficult because of the accumulation of deposits on the hood and ductwork of the sampling system. However, Battelle's analyses showed the presence of several compounds known to be carcinogenic.[26] Specific POMs which have been identified in door leak emissions are listed in Table 3-10.[27]

TABLE 3-8. MAJOR COMPONENTS OF COKE OVEN GAS[25]

Compound	Percent volume
H_2	46.5 - 65
CH_4	22.6 - 32.1
CO	4.0 - 10.2
CO_2	1.1 - 2.8
N_2	0.7 - 8.5
O_2	0.2 - 0.8
C_mH_n	1.7 - 5.2
H_2S	0.5 - 4.5
NH_3	1.3 - 9.0

TABLE 3-9. MINOR COMPONENTS OF COKE OVEN GAS[25]

Component	Concentration (g/m^3)
HCN	0.1 - 4.0
Dust	1.8 - 36
BaP	0.2 - 0.6
Benzene	21.4 - 35.8
Toluene	1.5 - 3.0

3.3.3.3 Emissions from Poorly-Controlled Door Leaks. Probably the most reliable coke oven door data are those gathered on BSO emissions from cokeside sheds. A cokeside shed is a large hood which extends over the entire coke side of the battery to capture both pushing and cokeside door emissions. Available cokeside shed test results are generally representative of high levels of percent leaking doors (i.e., levels greater than 30 PLD).

In May 1977, EPA tested Wisconsin Steel's shed that covered the coke side of 45 5-meter ovens.[10] Both the inlet and outlet of the wet electrostatic precipitator (WESP) were sampled during four 10-hour tests. Sampling was discontinued during pushing so that the data would only reflect emissions from doors. BSO emissions during the test averaged 6 kg/hr from an average of 31 leaking doors (70 PLD). Emission factors for BSO and POM were estimated as 0.25 g/kg of coal and 7.0×10^{-5} g/kg of coal, respectively.[10] POM species which were identified during the tests are given in Table 3-10 with their uncontrolled emission rates. BaP emissions from the Wisconsin Steel test averaged 0.043 g/hr.[27 29] The same testing program measured 0.165 to 0.212 gram of particulate per kilogram of coal.[30] Benzene analyses were performed on samples taken from three of the sampling runs. Benzene emissions varied from 42 to 84 g/Mg of coal with an emission rate of about 2 to 4 kg/hr.[29]

A similar test was conducted at Armco, Inc. in Houston, Texas, in October 1979.[12 31] The Armco shed encloses the coke side of 62 4-meter

TABLE 3-10. POM POLLUTANTS FROM COKE OVEN DOOR LEAKS[27]
(cokeside doors only)

POM species	Carcinogenicity[a]	Emission rate (mg/hr)
Naphthalene	-	387
Fluoranthrene	-	428
Pyrene	-	184
Benz(c)phenanthrene	+++	17
Chrysene	±	124
Benz(a)anthracene	+	114
7,12-Dimethylbenz(a)anthracene	++++	1
Benz fluoranthrenes	++	154
Benz(a)pyrene	+++	43
Benz(e)pyrene	-	95
Cholanthrene	++	<0.04
Indeno (1,2,3-cd)pyrene	+	46
Dibenz(a,h)anthracene	+++	48
Dibenz acridines	++	<0.04
Dibenz(c,g)carbazole	+++	<0.04
Dibenz pyrenes	+++	43
3-Methyl cholanthrene	++++	<0.04

[a]Reported carcinogenicity by Public Health Service[28] where

++++, +++, ++	Strongly carcinogenic
+	Carcinogenic
±	Uncertain or weakly carcinogenic
-	Not carcinogenic

ovens. Three tests conducted during nonpush periods measured 6.8 to 13 kilograms of BSO per hour from 10 to 24 leaking doors (16 to 39 PLD).[12] BaP emissions ranged from 25 to 32 g/hr at the inlet to the WESP. Benzene emissions ranged from 0.7 to 2.1 kg/hr.[31]

Bethlehem Steel sampled the emissions from their Burns Harbor shed on Battery 1.[10] The shed is 122 m (400 ft) long and covers the coke side of 82 6-meter ovens. During these tests, BSO emissions during nonpush periods averaged 3.9 kg/hr;[10] the number of doors leaking was not reported. Bethlehem Steel also sampled emissions from temporary stacks mounted on pusher-side doors at their Burns Harbor plant. A total of 14 samples were collected at four doors that were completely enclosed between buckstays. Toluene soluble organics averaged 0.22 kg/hr for each door.[10]

The shed test data, summarized in Table 3-11, reveal a range of BSO emissions of approximately 0.2 to 0.7 kilogram of BSO per hour per leaking door for tests where the number of leaking doors was recorded. The number of doors leaking at the Burns Harbor test was not reported, but the range per leaking door compares favorably with the other data for a level of 50 percent leaking doors. (An EPA inspection in March 1975 showed a level of 27 to 69 percent leaking doors.[32]) The results in Table 3-11 represent a range of 10 to 35 actual leaking doors. In terms of percent leaking doors, a range of 16 to 78 percent is represented. The limited data in Table 3-11 show no direct relationship between mass emissions and either the number of door leaks or the percent of doors leaking for different tests. However, the Armco shed data show that the overall mass emission rate increased when the number and percent of doors leaking increased.

3.3.3.4 Emissions from Well-Controlled Door Leaks. The emission rate from two cokeside shed tests averaged 0.2 to 0.7 kilogram of BSO per hour per leaking door. However, the results from leaking doors covered by cokeside sheds would overestimate the emissions from batteries with well-controlled doors. Larger door leaks are generally observed under sheds, because the emissions are usually removed by a pollution control device and, consequently, the incentive to prevent leaks is not as great. Poor lighting may also lead to more leaks because of the increased difficulty in inspecting, cleaning, and handling the doors.

TABLE 3-11. COKESIDE SHED TEST RESULTS

Test	Kilograms of BSO per hour	Percent leaking doors	Number of leaking doors	Kilograms of BSO per hour per leaking door
Wisconsin Steel Shed[30]	7.0	73	33	0.21
	5.9	78	35	0.17
	5.4	60	27	0.20
	6.0	69	31	0.19
Average	6.1	70	32	0.19
ARMCO, Inc. Shed[12]	6.8	16	10	0.68
	11	31	19	0.59
	13	39	24	0.55
Average	10.3	29	18	0.58
Bethlehem Steel, Burns Harbor[10]	3.9	--	--[a]	--[a]
	3.9	50[b]	41[b]	0.10[b]
Bethlehem Steel, hoods[10]	0.22[c]	--	1	0.22[c]

[a]The number of leaking doors was not reported.

[b]Assumes that 50 percent of the 82 doors were leaking.

[c]This value is for toluene solubles from a pusherside hood over the door.

A linear relationship between PLD and mass emissions from cokeside shed tests may be inappropriate to estimate emissions from well-controlled doors. Visible emissions from a typical door leaking under a shed are heavier than the visible emissions from a typical door on a well-controlled battery. To account for the change in plume size as the total number of leaking doors decreases, a mathematical model was developed to estimate controlled door leak emissions from the cokeside shed test results.[33] The theoretical model relates reductions in mass emissions to reductions in PLD by considering average sealing time, oven pressures, gap sizes, and gas characteristics. The model is developed according to the previously discussed relationship between average sealing time and PLD. The limitations of the model include limited data on oven pressure profiles and the assumption of typical sizes and numbers of gaps. The model results predict that mass emissions are roughly proportional to the 2.5 power of PLD down to levels of approximately 10 PLD. Below 10 PLD, the model becomes more linear; for example, the projected exponent is 1.6 at about 5 PLD.[33]

The model was applied to the Wisconsin Steel and Armco, Inc. shed tests for average levels of 6.1 kilograms of BSO per hour at 70 PLD and 10.3 kilograms of BSO per hour at 29 PLD, respectively. The results, summarized in Table 3-12, are used to estimate emissions from well-controlled doors.

The emission rates in Table 3-12 can be compared with the previously discussed topside leak tests to determine if the range of estimates for door leaks is reasonable. Most doors leak during the initial portion of the coking cycle when oven pressures and gap sizes are greatest; the doors seal later in the cycle. As the doors seal, the emission rate is reduced and the plume size decreases. The emission rate of interest is the average amount of emissions from the end of charging to the time when no emissions are visible. The minimum average rate may be approximated by the mass emissions from a narrow 1- to 2-meter plume from a single gap. Three tests were conducted during the second hour of coking to collect and measure the mass emissions in a 1- to 2-meter plume originating from a single hole in a charging port lid.[13] The test results averaged 0.021 kilogram of BSO per hour and ranged from 0.012 to 0.035 kilogram of BSO per hour; this compares favorably with the exponential model results extrapolated from the Wisconsin

TABLE 3-12. EXPONENTIAL MODEL FOR DOOR LEAK EMISSIONS[a]

Percent leaking doors	Wisconsin Steel test[30] (kg/hr/leaking door)	Armco, Inc. test[12] (kg/hr/leaking door)
70	0.19[b]	--
29	0.052	0.58[b]
20	0.030	0.33
15	0.019	0.21
12	0.014	0.15
10	0.010	0.12

[a]For comparison, the measured BSO rate for a 1- to 2-meter plume from one gap was 0.021 kg/hr.[13]

[b]Average results from the cokeside shed tests.

Steel test (0.01 to 0.03 kg/hr for 10 to 20 PLD). Therefore, this exponential model should provide a reasonable lower bound for estimating emissions from well-controlled doors. The comparison also indicates that the exponential model results for the Wisconsin Steel test in Table 3-12 may underestimate emissions from doors that have more than one gap between the door seal and jamb. The model results for the Armco, Inc. shed tests should provide a reasonable upper bound which would apply to controlled door leaks originating from either a very large gap or from multiple gaps on the same door.

3.3.3.5 Factors Affecting Emissions from Coke Oven Doors.

3.3.3.5.1 Oven pressure. A mixture of coals is introduced into a slotted by-product oven and heated to 900° to 1,100° C (1,650° to 2,000° F). Inside the oven, the bituminous coal initially develops a pressure caused by the destructive distillation of the coal structure and the release of volatiles. This initial pressure diminishes with time because the coke develops fissures and channels along the oven wall for the gas to escape.[34] Figure 3-16 demonstrates the initial rapid decrease in pressure followed by a slower second stage pressure reduction. After approximately 1 hr the pressure is 5 mm of water. The emissions from coke oven doors follow this general trend of leaking more severely at the beginning than at the end of the coking cycle because the pressure is relatively low after approximately 30 to 60 min.

Coke oven collector mains are operated with a positive pressure--usually 6 to 10 mm of water. The purpose of this elevated pressure is to assure that the oven remains above atmospheric pressure at all times and locations. If the pressure becomes negative at any time or place, a leak will produce infiltration of air with subsequent damage to the ovens.

Consider a 4-meter oven having a standpipe with a height of 1 m and coking at 980° C (1,800° F). The draft effect under these conditions is slightly greater than 4 mm of water. Thus, if the pressure in the collector main were exactly atmospheric pressure, the pressure at the bottom of the oven would be -4 mm. In this particular oven, a positive pressure of 6 to 7 mm in the collector main would assure that the pressure at the bottom of the oven would never go below 2 to 3 mm. For higher ovens and standpipes

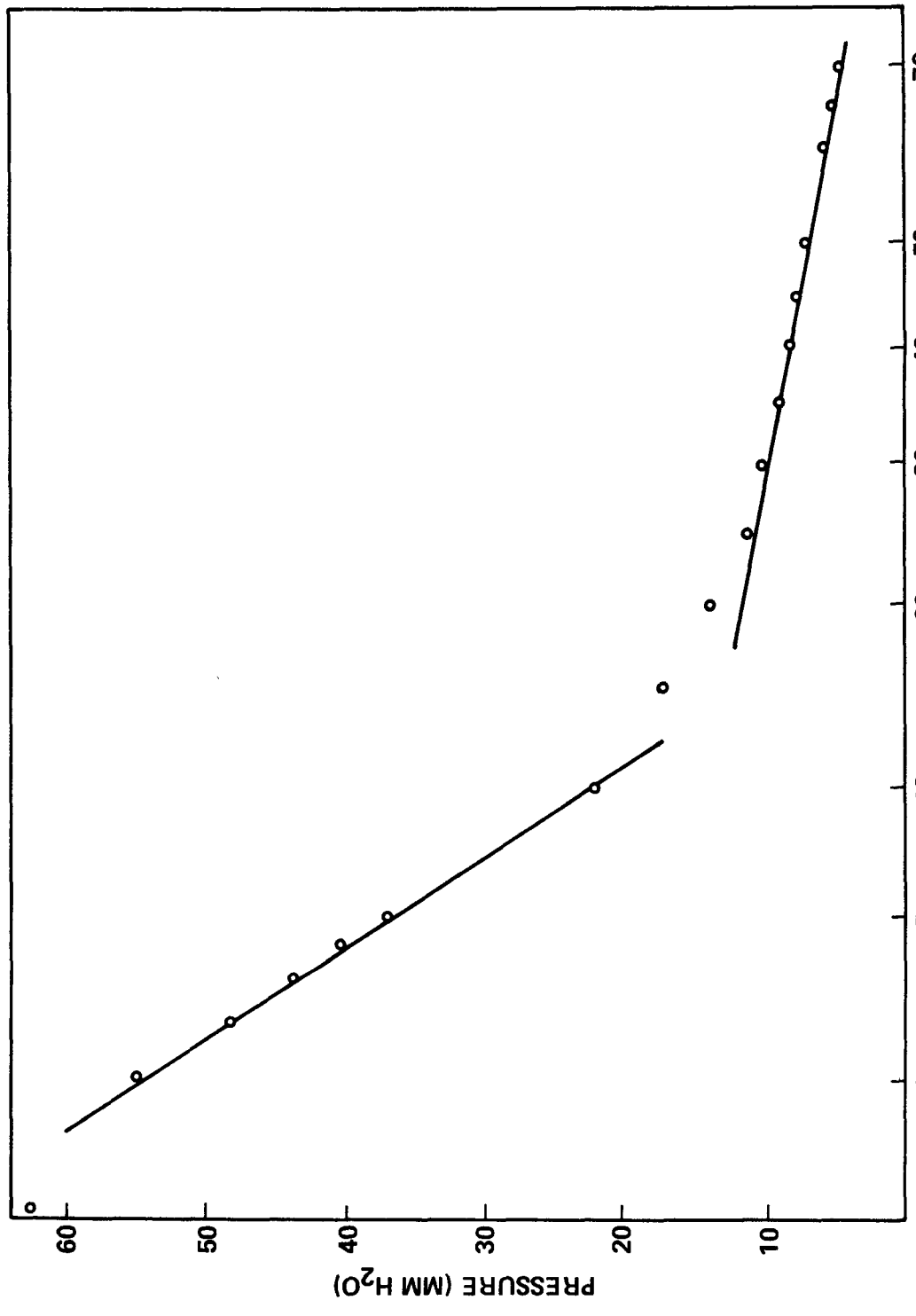

Figure 3-16. The effect of time on the internal oven pressure.[34]

and for higher coking temperatures, the collector main pressure would have to be correspondingly higher. Thus, oven height and coking temperature establish one set of variables for predetermining collector main pressure.

Another consideration in regard to oven pressures relates to the timing in the coke oven cycle. At the end of the cycle, coke temperatures are high, leading to maximum stack effect. Gas evolution is low and resistance to gas flow is negligible. Therefore, at the end of the coking cycle, the pressure at the bottom of the oven is at its lowest point.

At the beginning of the coking cycle, gas temperatures are low, leading to low stack effect, and gas evolution is high, leading to resistance to gas flow. Therefore, at the beginning of the cycle the pressure rises in the oven. The rise in pressure is nominal in the gas space above the charge. However, at the bottom of the oven, the gas which evolves must pass through the entire coal mass in order to reach the gas space leading to high resistance and high pressures.

Invariably the major portion of the leak from a coke oven door appears to be at the top of the door and in some cases, this observation is correct. However, in most cases, the major portion of the leak occurs at the bottom of the door because of the higher pressure in that area. The rising gases along the outside of the door, rather than the position of the leak, give the impression that gases are being emitted principally from the top of the door.

As tars start to condense on the jamb, the gaps will close in stages, usually starting from the bottom of the door. This reaction is partially caused by the decrease in temperature from the top to the bottom of the jamb where tars first begin to condense and plug gaps. In many instances, the top gaps never seal.[35]

3.3.3.5.2 Temperature effects. Coal is a complex mixture of organic compounds, and decomposition of these compounds forms gases, liquids, and solid organic compounds when heated in the absence of air. The rate of heating and the temperature are important in determining the composition of the by-product compounds. The products of coking are formed in the following three stages:

1. Primary products of coal below 700° C (1,778° F) include water, carbon oxides, hydrogen sulfide, hydroaromatic compounds, paraffins, olefins, phenolic, and nitrogen compounds.[7] With temperatures less than 500° C (1,270° F) there is a loss of side chains and small rings are split off. Between 500° and 600° C (1,270° and 1,524° F), the aromatic lamellae condense. Between 600° and 700° C (1,524° and 1,800° F) there is formation of polycyclic aromatics that can be present in coke oven emissions.[36]

2. Above 700° C in the hot oven walls, in the hot coke, and in the free space in the oven, the primary decomposition products have secondary reactions involving synthesis and degradation. Hydrogen is evolved with the formation of aromatic hydrocarbons and methane.[7] The coal residue has larger aromatic clusters above 800° C (2,032° F).

3. Hydrogen is progressively removed from the residue; this increases the size of the aromatic clusters and produces a hard coke.[7]

The diverse complex reactions that produce the coke oven gas are temperature dependent. Temperature can be controlled by adjusting the flue temperature, thus providing a possible control variable for the composition of the by-product gases. Moderate changes in the flue temperature exert little relative influence on coke properties, provided that coking rates are constant. Increases in the coking time are reported to increase the shatter resistance, cause the hardness to decrease approximately 10 percent, and cause the stability to increase approximately 10 percent.[37] Additional investigations confirmed these trends, but the coal type may have had an influence on these results.

Heat is transferred to the coal mix from the hot refractory bricks by radiation, conduction, and convection. At the high temperatures of coking, heat transfer by radiation is expected to dominate. Heat transfer by radiation is proportional to the difference in the fourth power of the temperature, and the coking time has been shown to be inversely related to the fourth power of the inner wall temperature.[37]

Based on a coking rate that is proportional to the fourth power of the temperature, the relative coking hours were estimated for a number of temperatures. The capacity of the battery can be calculated from the coking time. This approach does not include the time between pushes and charges.

Decreasing the temperature from 1,000° to 800° C (1,832° to 1,472° F) would reduce the coke capacity of a battery by one-half. Some of these calculation results are presented in Table 3-13. These calculations are rough approximations and do not take into account other factors, such as oven width and coal type, that affect coking time.

The temperature also affects the performance of doors and end components. Each coke oven is in cyclic operation and all of its components are subjected to thermal gradients and thermal cycling. Most of the components are restrained, so warpage and distortion of the end components occur. Gaps, and their resulting leaks, occur from thermal effects when the jamb bows inward or hourglasses more than the seal can accommodate or when the seal edge warps because of thermal buckling. Thermal damage to the end components of the oven can also occur from flames caused by ignition of leaking gases. Exposure of the oven ends to rain increases the thermal gradient through the end components and can increase the tendency for thermal distortion.[35]

3.3.3.5.3 Miscellaneous factors affecting emissions. The accumulation of deposits on the sealing surface of the jambs increases emissions after the deposits harden. The deposits may improve sealing when they are still soft and the sealing edge can cut through the tar. The deposits

TABLE 3-13. THE EFFECT OF TEMPERATURE ON THE RELATIVE COKING TIME

Oven wall temperature		Coking times	Percent of
° C	° F	(hours)	capacity at 1,000° C
1,000	1,832	16.0	100.0
950	1,742	18.78	85.2
900	1,652	22.19	72.1
850	1,562	26.4	60.6
800	1,472	32.7	50.5
750	1,382	38.4	41.7
700	1,292	46.8	34.1

harden after continuous exposure to the normal jamb temperatures and turn into an adhering form of hard carbon. The deposit can then prevent uniform contact of the seal edge with the door jamb and leave gaps where leaks occur.[35]

The time into the coking cycle also affects the door emissions. Immediately after charging, the major portion of escaping gases and vapors is steam. The high steam content in addition to higher pressure result in more severe emissions at the beginning of the coking cycle. More of the higher boiling temperature tars are removed later and they may seal gaps by condensing and plugging the passages.[35] The length of the coking cycle also affects emissions. The longer cycle time for producing foundry coke (30 hr) as compared to that for metallurgical coke production (18 hr) results in a lower internal pressure and requires a lower coking temperature.

The age of the battery and the maintenance program also affect the leakage rate from the coke oven doors. Doors, door seals, and jambs require periodic inspection, cleaning, and repair. Damage is caused by fires, temperature excursions, thermal distortion, buckling, or door handling equipment so that the door seal may not contact the jamb sealing surface in all places. One may expect that an older battery could have more emission problems caused by expansion and shifting of brick, warping of metal parts, and looser tolerances, particularly on old door handling equipment. Proper and precise control of the door handling equipment is necessary to align the door correctly to accomplish the desired seal contact. If the equipment is worn badly with excessive tolerances, the seal, door, or jamb may be damaged or misaligned. An uneven or low sealing force, which is caused by a poor latching method, damaged equipment, or inadequate adjustment and occurs on the door during mounting, leaves gaps and increases emissions.

3.3.4 Topside Leaks and Their Emissions

After a charge, the charging port lids must be replaced and the standpipe lids must be closed to isolate the oven from the atmosphere. Leaks caused by improperly seated or distorted lids permit emissions to reach the atmosphere. The bodies of the standpipes can also leak. Cracks or a broken seal at the bottom of the standpipe are the most common causes of leaks

in the standpipe body. Topside emissions are expected to be similar in composition to door leaks because both are composed of coke oven gas that is evolved during coking.

An emission test was conducted at U.S. Steel, Clairton's Battery 1 by EPA in August 1978.[13] During the second hour of coking, samples were collected from a vent pipe on a charging port lid. The leak rate was adjusted to yield small leaks with a 0.3-meter (1-foot) visible plume and large leaks with a 1- to 2-meter (3- to 6-foot) visible plume. The results, listed in Table 3-14, show a range of 0.0017 to 0.0053 kg/hr for a small leak, with an average rate of 0.0033 kg/hr. Emissions from the large leak ranged from 0.012 to 0.035 kg/hr, with an average rate of 0.021 kg/hr. The analysis for BaP showed that 1.4 to 1.8 percent of the BSO was BaP. The emission rates for POMs ranged from 0.002 kg/hr for the small leak to 0.013 kg/hr for the large leak.

The emission rate of 0.0033 kg/hr is a reasonable lower bound to estimate the mass emissions in a small lid leak. The emission rate of 0.021 kg/hr should be a reasonable upper bound to estimate emissions from a badly leaking offtake with a 1- to 2-meter plume. This range would underestimate emissions from multiple large leaks on the same lid or offtake.

Other estimates of topside leak emissions were based on a comparison between the length of the sealing edge on lids and standpipe caps and the length of door seals. This method was used as an approximation in the absence of mass emissions data. These approximations are not presented in this report because the topside tests previously discussed provide a more accurate basis for estimates of mass emissions.

The major factor affecting topside emissions is worker practice in applying and cleaning luting mixtures to the lids and offtakes. The luting mixtures are prepared by the plant personnel and different consistencies have been recognized as being essential for good sealing. For example, luting mixtures used for the standpipe cap are more viscous than mixtures for the lids.

Another factor affecting topside emissions is pressure fluctuation from aspiration in the collector mains. If these fluctuations are uncontrolled, they could result in charging lids or standpipe caps being unseated and requiring topside workers to reseal the lids or caps.

TABLE 3-14. TOPSIDE LEAK EMISSION TEST[13]

Leak size[a]	BSO (kg/hr)	BaP (kg/hr)
Large	0.002[b]	--
	0.017	--
	0.035	--
	0.012	0.00022[c]
Average	0.021	--
Small	0.0017	--
	0.0029	--
	0.0053	0.000072[c]
Average	0.0033	--

[a]A large leak yields a 1- to 2-meter (3- to 6-foot) visible plume. A small leak yields a 0.3-meter (1-foot) visible plume.

[b]Experimental run: vent was partially plugged and flow was restricted.

[c]These values are 1.4 to 1.8 percent of the BSO.

3.4 BASELINE REGULATIONS

Current consent decrees and State Implementation Plans require varying levels of control for existing batteries. In addition, Occupational Safety and Health Administration (OSHA) regulations require equipment and work practice controls for coke oven emissions to reduce worker exposure, but do not set a performance level in terms of visible emissions. This section summarizes existing regulations for wet-coal charging, door leaks, and topside leaks.

Existing regulations vary from battery to battery with the most stringent limits applied to new or rebuilt batteries. Most of the existing batteries have current limits that follow the guidance of EPA's Reasonably Available Control Technology (RACT) with visible emission limits of about 25 seconds per charge, 10 to 12 PLD, 3 PLL, and 10 PLO. The limits associated with Lowest Achievable Emission Rate (LAER) have been applied to new and rebuilt batteries with visible emission limits of 11 seconds per charge, 5 PLD, 1 PLL, and 4 PLO. The current limits in effect are collectively called the regulatory baseline and result from State regulations and negotiated consent decrees.

Current regulations are summarized in Tables 3-15 through 3-18. For charging, approximately 125 batteries (93 percent of the total) have existing regulations of 25 seconds per charge or less. Approximately 38 of these batteries are given an exclusion for the highest observation in a total of 20 in calculating control performance. Approximately 14 batteries (10 percent of the total) are required to meet LAER limits of 11 to 12 seconds per charge.

The regulations for door leaks in Table 3-16 indicate that 16 PLD is the most lenient baseline limit and 4 PLD is the most stringent. Approximately 104 batteries have limits of 10 PLD or less; however, many of these batteries are given exclusions of two to four doors. A total of 7 batteries have LAER limits of 5 PLD or less.

The baseline limits for lid leaks range from 1 to 5 PLL. Approximately 84 batteries have limits of 3 PLL or less and 6 batteries have the LAER limit of 1 PLL. The limits for offtake leaks range from 4 to 10 PLO. A total of 13 batteries have current limits equal to the LAER limit of 4 PLO.

TABLE 3-15. SUMMARY OF BASELINE REGULATIONS FOR CHARGING

Charging limit (average seconds/charge)	Number of batteries	Percent of total
32	8	6.0
30 (-1/20)[a]	1	0.7
25 (-1/20)[a]	38	28.4
25	9	6.7
20	11	8.2
19	53	39.5
12	2	1.5
11	12	9.0

[a]Excludes highest observation in 20.

TABLE 3-16. SUMMARY OF BASELINE REGULATIONS FOR DOOR LEAKS

Door leak limit (percent leaking)	Number of batteries	Percent of total
16	2	1.5
15	21	15.7
12	7	5.2
10 (-4)[a]	20	14.9
10 (-2)[b]	50	37.3
10	27	20.2
5	6	4.5
4	1	0.7

[a]Excludes 4 doors.

[b]Excludes 2 doors.

TABLE 3-17. SUMMARY OF BASELINE REGULATIONS FOR LID LEAKS

Lid leak limit (percent leaking)	Number of batteries	Percent of total
5	44	32.8
4	6	4.5
3	28	20.9
2	50	37.3
1	6	4.5

TABLE 3-18. SUMMARY OF BASELINE REGULATIONS FOR OFFTAKE LEAKS

Offtake leak limit (percent leaking)	Number of batteries	Percent of total
10	84	62.7
5	37	27.6
4	13	9.7

A battery-by-battery listing of status and baseline regulations compiled during the fourth quarter of 1984 is given in Table 3-19. The status was described as operating, hot idle (no production but the battery is kept hot), and cold idle (the battery has been cooled down but could be restarted if needed). Table 3-19 includes 43 plants and 134 total batteries; however, only 93 batteries at 36 plants were operating in late 1984.

OSHA is presently enforcing a set of regulations that are intended to protect workers' health by limiting personnel exposure to emissions from coke-producing operations. The OSHA standard limits worker exposure to 150 micrograms of benzene soluble fraction of total particulate matter per cubic meter based on a time-averaged exposure and also mandates equipment controls and work practices. The OSHA requirements for charging include:[38]

- Stage or sequential charging;
- Double main or jumper pipe;
- Written procedure;
- Adequate aspiration;
- Inspection and cleaning of goosenecks, standpipes, roof carbon buildup, steam nozzles, and liquor sprays;
- Larry car modifications; and
- Leveler bar seals.

For door leak controls, OSHA requires:[38]

- Written procedures,
- Inspection and cleaning,
- Door repair facilities,
- Adequate spare doors, and
- Chuck door gaskets.

The OSHA requirements for topside leaks are:[38]

- Regular inspection, cleaning, repair, or replacement of equipment; and
- Prevention of miscellaneous topside emissions.

TABLE 3-19. BASELINE VISIBLE EMISSION LIMITS

No.	Plant	Battery No.	Status	Baseline Visible Emission Limits			
				s/chg	PLO	PLL	PLO
1	AL Byproducts, Tarrant, AL	A	0	19	15	5	10
		5	1	19	15	5	10
		6	0	19	15	5	10
2	Empire Coke, Holt, AL	1	0	19	15	5	10
		2	0	19	15	5	10
3	Koppers, Woodward, AL	1	0	19	15	5	10
		2A	0	19	15	5	10
		2B	0	19	15	5	10
		4	0	19	15	5	10
		5	0	19	15	5	10
4	LTV Steel, Gadsden,AL	2	0	19	15	5	10
		3	0	19	15	5	10
5	LTV Steel, Thomas,AL	1	2	19	15	5	10
6	Jim Walters, Birmingham, AL	3	0	19	15	5	10
		4	0	19	15	5	10
		5	0	19	15	5	10
7	U.S. Steel, Fairfield, AL	2	2	11	10	2	5
		5	2	19	15	5	10
		6	2	19	15	5	10
		9	2	11	5	1	4
8	National Steel, Granite City, IL	A	0	11	10	5	10
		B	0	11	10	5	10
		C	3	11	10	5	10
9	Interlake, Chicago, IL	1	0	25(1/20)	10	5	10
		2	0	25(1/20)	10	5	10
10	LTV Steel,So.Chicago,IL	2	0	11	10	5	10
11	Bethlehem Steel, Burns Harbor, IN	1	0	25(1/20)	10(-4)	3	10
		2	0	25(1/20)	10(-4)	3	10
12	Citizens Gas, Indianapolis, IN	E	0	25(1/20)	10(-4)	3	10
		H	0	25(1/20)	10(-4)	3	10
		I	0	25(1/20)	10(-4)	3	10
13	IN Gas, Terre Haute, IN	1	0	25(1/20)	10(-4)	3	10
		2	0	25(1/20)	10(-4)	3	10
14	Inland Steel, E. Chicago, IN	6	0	25(1/20)	10(-4)	3	10
		7	0	25(1/20)	10(-4)	3	10
		8	0	25(1/20)	10(-4)	3	10
		9	0	25(1/20)	10(-4)	3	10
		10	0	25(1/20)	10(-4)	3	10
15	U.S. Steel, Gary, IN	1	2	25(1/20)	10(-4)	3	10
		5	1	25(1/20)	10(-4)	3	10
		7	1	25(1/20)	10(-4)	3	10
		13	1	25(1/20)	10(-4)	3	10
		15	0	25(1/20)	10(-4)	3	10
		16	1	25(1/20)	10(-4)	3	10
16	LTV Steel, E.Chicago,IN	4	2	25(1/20)	10(-4)	3	10
		9	2	25(1/20)	10(-4)	3	10

(continued)

TABLE 3-19. (continued)

No.	Plant	Battery No.	Status	Baseline Visible Emission Limits			
				s/chg	PLD	PLL	PLO
17	Armco Inc.,Ashland,KY	3	0	25	10	5	10
		4	0	11	10	5	10
18	Bethlehem Steel,Sparrows Pt., MD	1	1	32	10	3	10
		2	1	32	10	3	10
		3	2	32	10	3	10
		4	2	32	10	3	10
		5	2	32	10	3	10
		6	2	32	10	3	10
		11	0	32	10	3	10
		12	0	32	10	3	10
		A	0	11	5	1	4
19	Rouge Steel,Dearborn,MI	A	0	20	10	4	4
		Ax	0	20	10	4	4
		B	0	20	10	4	4
		Dx	0	20	10	4	4
20	National Steel, Detroit, MI	4	0	20	10	4	4
		5	0	20	12	4	4
21	Carondolet, St. Louis, MO	1	0	20	15	2	10
		2	0	20	15	2	10
		3	0	20	15	2	10
22	Tonawanda, Buffalo, NY	1	0	30(1/20)	10	2	10
23	Bethlehem Steel, Lackawanna, NY	7	0	25	10	2	10
		8	0	25	10	2	10
		9	0	25	10	2	10
24	LTV Steel,Warren,OH	4	0	25(1/20)	10	5	10
25	Armco Inc., Middletown,OH	1	0	25(1/20)	16	5	10
		2	0	25(1/20)	16	5	10
		4	0	25(1/20)	10(-2)	5	10
26	New Boston, Portsmouth, OH	1	0	25(1/20)	10(-2)	5	10
27	Koppers, Toledo, OH	C	0	25(1/20)	10(-2)	5	10
28	LTV Steel, Cleveland,OH	1	0	12	10(-2)	2	5
		2	0	25(1/20)	10(-2)	5	10
		3	0	25(1/20)	10(-2)	5	10
		4	2	25(1/20)	10(-2)	5	10
		6	0	20	10(-2)	5	5
		7	0	20	10(-2)	5	5
29	U.S. Steel, Lorain, OH	D	2	25(1/20)	10(-2)	5	10
		G	2	25(1/20)	10(-2)	5	10
		H	2	25(1/20)	10(-2)	5	10
		I	2	25(1/20)	10(-2)	5	10
		J	2	25(1/20)	10(-2)	5	10
		K	2	25(1/20)	10(-2)	5	10
		L	2	25(1/20)	10(-2)	5	10
30	AL Byproducts,Keystone,PA	3	2	19	10(-2)	2	5
		4	2	19	10(-2)	2	5

(continued)

TABLE 3-19. (continued)

No.	Plant	Battery No.	Status	Baseline Visible Emission Limits			
				s/chg	PLD	PLL	PLO
31	Bethlehem Steel, Bethlehem, PA	A	0	19	10(-2)	2	5
		2	0	19	10(-2)	2	5
		3	0	19	10(-2)	2	5
		5	0	19	10(-2)	2	5
32	LTV Steel, Aliquippa,PA	A1	0	19	10(-2)	2	5
33	LTV Steel, Pittsburgh,PA	P1	0	19	10(-2)	2	5
		P2	0	19	10(-2)	2	5
		P3N	0	19	10(-2)	2	5
		P3S	0	19	10(-2)	2	5
		P4	0	19	10(-2)	2	5
34	Koppers, Erie, PA	A	0	19	10(-2)	2	5
		B	0	19	10(-2)	2	5
35	Shenango, Pittsburgh, PA	1	0	11	5	1	4
		4	0	19	10(-2)	2	5
36	U.S. Steel, Clairton, PA	1	1	19	10(-2)	2	5
		2	1	19	10(-2)	2	5
		3	1	19	10(-2)	2	5
		7	1	19	10(-2)	2	5
		8	1	19	10(-2)	2	5
		9	1	19	10(-2)	2	5
		15	1	11	5	1	4
		19	0	19	10(-2)	2	5
		20	0	11	5	1	4
		21	0	19	10(-2)	2	5
		22	0	19	10(-2)	2	5
		B	0	11	5	1	4
37	U.S. Steel, Fairless Hills, PA	1	2	19	10(-2)	2	5
		2	2	19	10(-2)	2	5
38	Wheeling-Pitt, Monessen, PA	1A	2	19	10(-2)	2	5
		1B	0	19	10(-2)	2	5
		2	0	19	10(-2)	2	5
39	Chattanooga Coke, Chattanooga, TN	1	0	19	10	2	10
		2	0	19	10	2	10
40	Lone Star Steel, Lone Star, TX	C	0	12	4	2	4
41	U.S. Steel, Provo, UT	1	0	19	10	2	5
		2	0	19	10	2	5
		3	0	19	10	2	5
		4	0	19	10	2	5
42	Weirton Steel, Brown's Is.,WV	1	2	25	10(-2)	2	10
43	Wheeling-Pitt, E.Steubenville,WV	1	0	25	10(-2)	2	10
		2	0	25	10(-2)	2	10
		3	0	25	10(-2)	2	10
		8	0	25	10(-2)	2	10

Status
0=online
1=hot idle
2=cold idle
3=under construction

(1/20)=excludes highest in 20.
(-2)=excludes 2 doors.
(-4)=excludes 4 doors.

3.5 REFERENCES

1. Suta, B. E. Human Population Exposure to Coke Oven Atmospheric Emissions. EPA Contract Nos. 68-01-4314 and 68-02-2835. Revised May 1979. p. 3, 37, and 38.

2. Coke Producers in the United States in 1977. U.S. Department of Energy, Energy Information Administration. Washington, D.C. 1978.

3. Coke and Coal Chemicals. U.S. Department of Energy, Energy Information Administration. Washington, D.C. Energy data reports. December 1976, 1977, 1978, 1980, 1983.

4. Sheridan, E. T. Coke and Coal Chemicals. Minerals Yearbook. U.S. Department of the Interior, Bureau of Mines. 1970-1975.

5. Sheridan, E. T. Supply and Demand for United States Coking Coals and Metallurgical Coke. U.S. Department of the Interior, Bureau of Mines. 1976. p. 15-18.

6. Kuljuian, N. J. By-Product Coke Battery Compliance Evaluation. EPA Contract No. 68-02-1321. 1. Task 13. June 1975.

7. McGannon, H. E. (ed.). The Making, Shaping, and Treating of Steel. U.S. Steel Corporation. Pittsburgh, PA. 1971. p. 104-177.

8. Letter from Sparacino, C., Research Triangle Institute, to Coy, D., Research Triangle Institute. January 12, 1979. BaP Analysis--Coal Tar Samples A, B, and C.

9. Bee, R. W., et al. Coke Oven Charging Emission Control Test Program--Volume I & II. Office of Research and Development, U.S. Environmental Protection Agency. Environmental Protection Technology Series. Publication No. EPA-650/2-74-062. July 1974.

10. Trenholm, A. R., L. L. Beck, and R. V. Hendriks. Hazardous Organic Emissions From Slot Type Coke Ovens. U.S. Environmental Protection Agency. 1978.

11. Kemner, W. F. Cost Effectiveness Model for Pollution Control at Coking Facilities. Publication No. EPA-600/2-79-185. August 1979. p. 24, 30, 31.

12. Benzene Soluble Organics Study - Coke Oven Door Leaks (Draft). Clayton Environmental Consultants, Inc. EPA Contract No. 68-02-2817. EMB Report No. 79-CKO-22. December 1979.

13. Hartman, M. W. Emission Test Report - U.S. Steel Corporation, Clairton, Pennsylvania. TRW Environmental Engineering Division. EMB Report No. 78-CKO-13. July 1980. p. 3.

14. Giunta, J.S. U.S. Steel Corporation Technical Report on Door Research Program. Submitted to EPA, Division of Stationary Source Enforcement. p. 10, B-13.

15. Herrick, R. A. and L. G. Benedict. A Microscopic Classification of Settled Particles Found in the Vicinity of a Coke-Making Operation. Journal of the Air Pollution Control Association. 19:325-328. May 1969.

16. Stolz, J. H. Coke Charging Pollution Control Demonstration. American Iron and Steel Institute and Office of Research and Development, U.S. Environmental Protection Agency. Environmental Protection Technology Series. Publication No. EPA-650/2-74-022. March 1974. 302 p.

17. Department of Health, Education, and Welfare, National Institute for Occupational Safety and Health. Criteria for a Recommended Standard--Occupational Exposure to Coke Oven Emissions. 1973.

18. Smith, W. M. Evaluation of Coke Oven Emissions. Yearbook of the American Iron and Steel Institute. 1970. p. 163-179.

19. Cuscino, T. A. Particulate Emission Factors Applicable to the Iron and Steel Industry. Publication No. EPA-450/4-79-028. September 1979. p. 54.

20. White, et al. Atmospheric Emissions of Coking Operations--A Review.

21. Allen, C. C. Estimation of Charging Emissions for By-Product Coke Ovens. EPA Contract No. 68-02-3056. RTI No. 1736/2/02. March 1980.

22. Giunta, J. S. Door Emissions Control Technology. (Presented at IISI Meeting, Fourth Working Session: Air Pollution Control Related to Coking Operations. Chicago, IL. June 11, 1979).

23. Schultz, L. D. Control of Coke Oven Door Emissions. Allied Chemical Corporation. (Presented at 84th National Meeting of AIChE. Atlanta, GA. February 26-March 1, 1978).

24. Baldwin, V. H. and D. W. Coy. Study to Develop Retrofit Information and Other Data for Use in Setting Standards for Coke Oven Emissions. EPA Contract No. 68-02-2612. Task 39. March 1978.

25. Mabey, W. R. Identity and Chemical and Physical Properties of Compounds in Coke Oven Emissions. EPA Contract No. 68-01-4314. September 1977.

26. Barrett, R. E., et al. Sampling and Analysis of Coke-Oven Door Emissions. Publication No. EPA-600/2-77-213. October 1977.

27. Barrett, R. E. and P. R. Webb. Effectiveness of a Wet Electrostatic Precipitator For Controlling POM Emissions From Coke Oven Door Leakage. (Presented at 71st Meeting of APCA. Houston, TX. June 25-29, 1978).

28. Particulate Polycyclic Organic Matter. National Academy of Sciences. Washington, D.C. 1972. p. 5-12.

29. Webb, P. R. and R. E. Barrett. Stack Emission Sampling At Wisconsin Steel Company Coke Oven Plant, Chicago, Illinois. Report No. 77-CKO-11. EPA Contract No. 68-02-1409. Task 50. November 4, 1977. 21 p.

30. Air Pollution Emission Test, Final Report, Wisconsin Steel. Clayton Environmental Consultants. Report No. 77-CKO-11-A. EPA Contract No. 68-02-2817. May 1978.

31. Coke Oven Emission Testing - Armco Steel Corporation, Houston, Texas (Draft). TRW Environmental Engineering Division. EPA Contract No. 68-02-2812. (Test conducted October 1979).

32. Source Testing of a Stationary Cokeside Enclosure--Bethlehem Steel Corporation, Chesterton, Indiana. Clayton Environmental Consultants, Inc. EPA Contract No. 68-02-1408, Task 10. February 9, 1977. p. 18.

33. Allen, C. C. A Model to Estimate Hazardous Emissions from Coke Oven Doors. EPA Contract No. 68-02-3056. RTI No. 1736/2/01. March 1980.

34. Stanley, R. W. Coke Oven Door System: Field Data. U.S. Steel. (Presented at 84th Meeting of AIChE. Atlanta, GA. February 26-March 1, 1978).

35. Lownie, H. W., et al. Study of Concepts for Minimizing Emissions from Coke-Oven Door Seals. Publication No. EPA-650/2-75-064. July 1975.

36. Graham, J. P. and B. P. Kirk. Problems of Coke-Oven Air Pollution Control. The Metals Society. London SWIY 5DB. p. 82-100.

37. Lowry, H. H. (ed.). Chemistry of Coal Utilization. Supplementary Volume. John Wiley and Sons, Inc. NY. 1963.

38. Allen, C. C., et al. Comparison of OSHA's and Potential EPA Regulation For Coke Oven Batteries. EPA Contract No. 68-02-3056. RTI No. 1736/2-02S. Revised May 1980.

4. EMISSION CONTROL TECHNIQUES

This chapter discusses the technology for control of emissions from wet-coal charging, oven door leaks, and topside leaks during coking.

4.1 TECHNOLOGY FOR THE CONTROL OF EMISSIONS FROM CHARGING

Charging practices have been changed by the current efforts of regulatory agencies and coke oven operators to reduce emissions. Previously, the most common procedure was to isolate the gas-collection system from the oven and charge the coal into the red-hot ovens simultaneously through three to five charging holes in the top of the oven. When the moist coal entered the hot oven, it displaced the air. This displacement and the immediate gasification of moisture and volatile components of the coal caused the oven pressure to rise sharply. Because the gas-collection system was blocked off, the only escape for the smoke, hydrocarbons, gases, and steam was to the atmosphere through any opening. Techniques to control these emissions are discussed in this section.

Investigations have revealed that successful control of these emissions is often more dependent on adherence to specified operating procedures than on the design of charging equipment. Consequently, the following discussion will concentrate on these procedures as well as the required equipment modifications. These control systems (or procedures) are stage charging, sequential charging, and wet scrubbers mounted on larry cars.

4.1.1 Stage Charging

Stage charging was first developed in England in the 1950's and was more recently applied in the United States. Although there are certain equipment requirements, these do not include conventional air pollution control devices such as fabric filters and scrubbers.

Stage charging is the ordered pouring of coal into the oven so that an exit space for gas is maintained consistently regardless of coal flow. The larry car hoppers are discharged in an ordered sequence so that an open tunnelhead is maintained at the top of the oven until the last hopper is discharged. Emissions are effectively contained in the ovens and collecting mains by steam aspiration, and they are exhausted through the regular gas handling equipment.[1] Successful stage charging is dependent on many factors such as equipment design, maintenance, and operating procedures. Each factor is significant; failure in only one area can negate all the money and effort expended in the other areas.

4.1.1.1 Description of Stage Charging. Stage charging is primarily an operating technique based on a predetermined sequence for simultaneously charging coal from one or two larry car hoppers into the incandescent ovens. The ovens are maintained under a slight negative pressure by applying steam aspiration in the goosenecks of the offtake. The assembly that comprises the standpipe and gooseneck is often called the offtake or ascension pipe. The stage charging technique is uncomplicated but requires close attention to detail. Figure 4-1 illustrates the stage charging technique and presents the case with four charging holes and aspiration at two offtakes. Where there is only one active offtake, only one charging port will be open at a time, to avoid pressure imbalance.[2] The most important aspects of stage charging are good aspiration and the operating crew's strict adherence to specific charging and leveling practices. These practices, as observed by EPA at United States Steel Corporation at Clairton,[3] are as follows:

Step 1. After the gooseneck (the connection between the top of the standpipe and the collecting main) is cleaned, the loaded larry car is positioned over the oven to be charged as shown in Figure 4-1. The drop sleeves (or boots) under the hoppers are lowered around the previously opened charging holes, the damper between the offtake and main is opened, and the steam for aspiration in the gooseneck is turned on. At this time, coal charging can begin.

Step 2. Coal is simultaneously discharged into the oven from Hoppers 1 and 4. (At some plants, these hoppers are emptied one at a time.) When these hoppers are empty, their slide (or shear) gates are closed, the drop sleeves are raised, and the charging hole lids are replaced. (Some plants

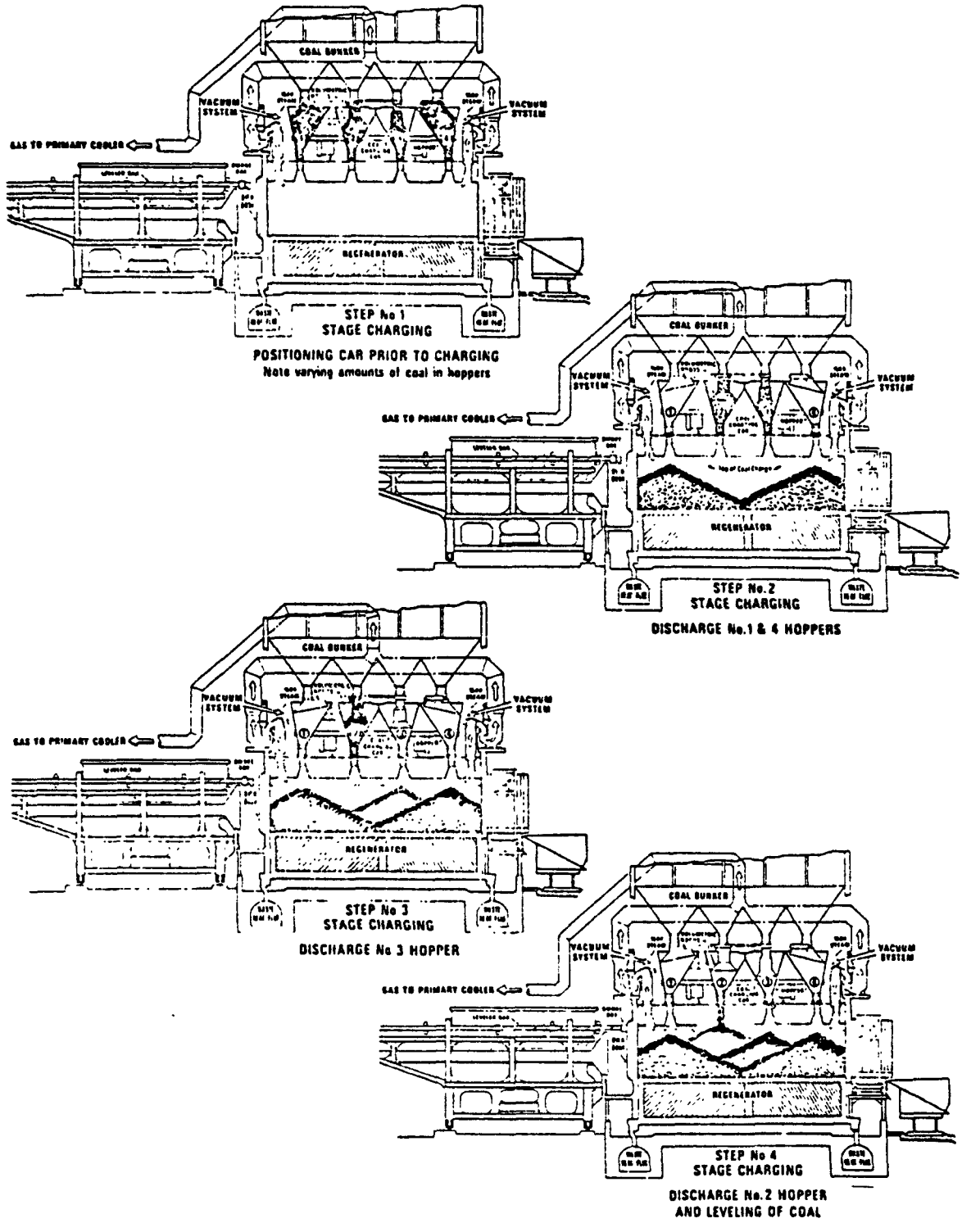

Figure 4-1. Steps in stage charging coal into a coke oven with four charging holes.

do not raise drop sleeves or replace lids until all the hoppers are empty.) The discharge of these two hoppers is illustrated in Figure 4-1. The height of the coal does not extend above a designated coal line for the oven. This limit ensures that the open space at the top of the oven remains clear so that the effect of the aspiration is not blocked from any portion of the oven.

Step 3. Hopper 3 is discharged as shown in Figure 4-1. Again, the peak level of the coal is below the designated coal line for the oven. Immediately after this hopper is emptied, its slide gate is closed, the drop sleeve is raised, and the charging hole lid is replaced.

Step 4. Hopper 2 is the last to be discharged. The coal from this hopper will peak to the top of the oven (thereby blocking the open space) and move up into the charging hole as shown in Figure 4-1. After the coal flow stops, the chuck door is opened, and the leveler bar is inserted to level the coal (and reestablish the open space). This process also permits the last bit of coal in the hopper to flow into the oven. A leveler boot, which is one of the equipment requirements for stage charging, is used to seal the opening between the chuck door and leveler bar. When Hopper 2 is empty, its slide gate is closed, the drop sleeve is raised, and the charging hole lid is replaced. The leveler bar then makes about two more passes to assure complete leveling of the coal charge. (This procedure also assures enough open space at the top of the oven for gases to pass to the collecting mains during the coking cycle.) The leveler bar is retracted, the chuck door is closed, and the aspiration steam is turned off.

All of the batteries at U.S. Steel, Clairton have double mains. At the U.S. Steel, Fairfield batteries with single mains, a similar procedure is followed except a jumper pipe joining the oven on charge to an adjacent oven must be connected before the charge starts.[1]

Perhaps the most important ingredient of a good stage charge is adequate aspiration from the oven. In essence, a slightly negative pressure must be maintained at every open charging port throughout the entire charge. Figure 4-2 shows a typical aspiration system.[4] Steam is the common aspiration fluid, although it has been reported that liquor sprays can achieve stronger aspiration.[5] Other advantages reported for the liquor sprays are less frequent cleaning of nozzles and less steam, condensate, and heat in

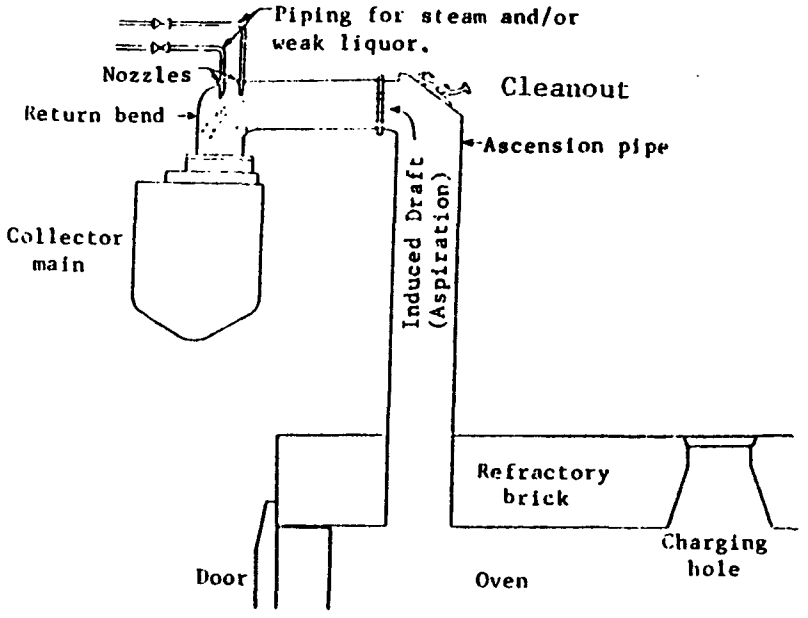

Figure 4-2. A typical aspiration system operating in the return bend of the gas collection duct.

the effluent from the mains. However, aspiration efficiency of steam or liquor sprays is sensitive to the flow and pressure maintained at the nozzles. Some examples of steam pressures used are 700 to 800 kPa (90 to 115 lb/in^2) at U.S. Steel, Fairfield,[6] 900 to 1,100 kPa (120 to 150 lb/in^2) at CF&I Steel Corporation,[7] and 850 to 1,000 kPa (110 to 130 lb/in^2) at U.S. Steel, Gary.[8] These plants use steam nozzles with inside diameters of 1.4 cm (9/16 in),[9] 0.8 cm (5/16 in),[10] and 1.9 cm (3/4 in),[11] respectively. Figure 4-3[12] shows the effect of the steam pressure and nozzle size on aspiration capacity. The steam pressures and nozzle sizes necessary for adequate aspiration vary from plant to plant depending on factors such as offtake design and amount of air leakage into the oven. To ensure adequate aspiration, the steam nozzles require frequent inspection and cleaning.

The rate at which gases can be aspirated from an oven must be limited. Too high a rate can pull an excessive amount of coal dust into the collecting mains. The coal dust in the main creates potential problems with the recovery of by-products, especially tar. Therefore, aspiration systems are carefully designed to provide just enough draft on the oven to prevent emissions during the charging cycle. Extra openings at the oven being charged must be avoided.

Timely removal and replacement of the lids on the charging ports is crucial to good stage charging; manual or automated methods can be used. (The most common manual method uses hydraulically operated electromagnets.) Either method can be effective, although the automated system may reduce the incidence of improper alignment of the lids. Any mechanical system must allow the lids to be moved individually.

Typically, shrouds or sleeves (moveable tubes which connect the larry car hopper to the charge hole through which the coal falls) are used to prevent air filtration at open charging ports. However, another system which was observed by EPA is much more effective.[13] At the Ruhrkold, Zollverein Plant in Essen, Germany, the "Still-ERIN" charging car has small discharge hoppers mounted below the normal larry car hoppers (Figure 4-4). An extension from the bottom of each discharge hopper is tapered at the lower end. This taper mates with the charging hole to provide a very effective seal which prevents air infiltration or escape of emissions. To minimize escape of emissions through the hoppers, a level controller in the

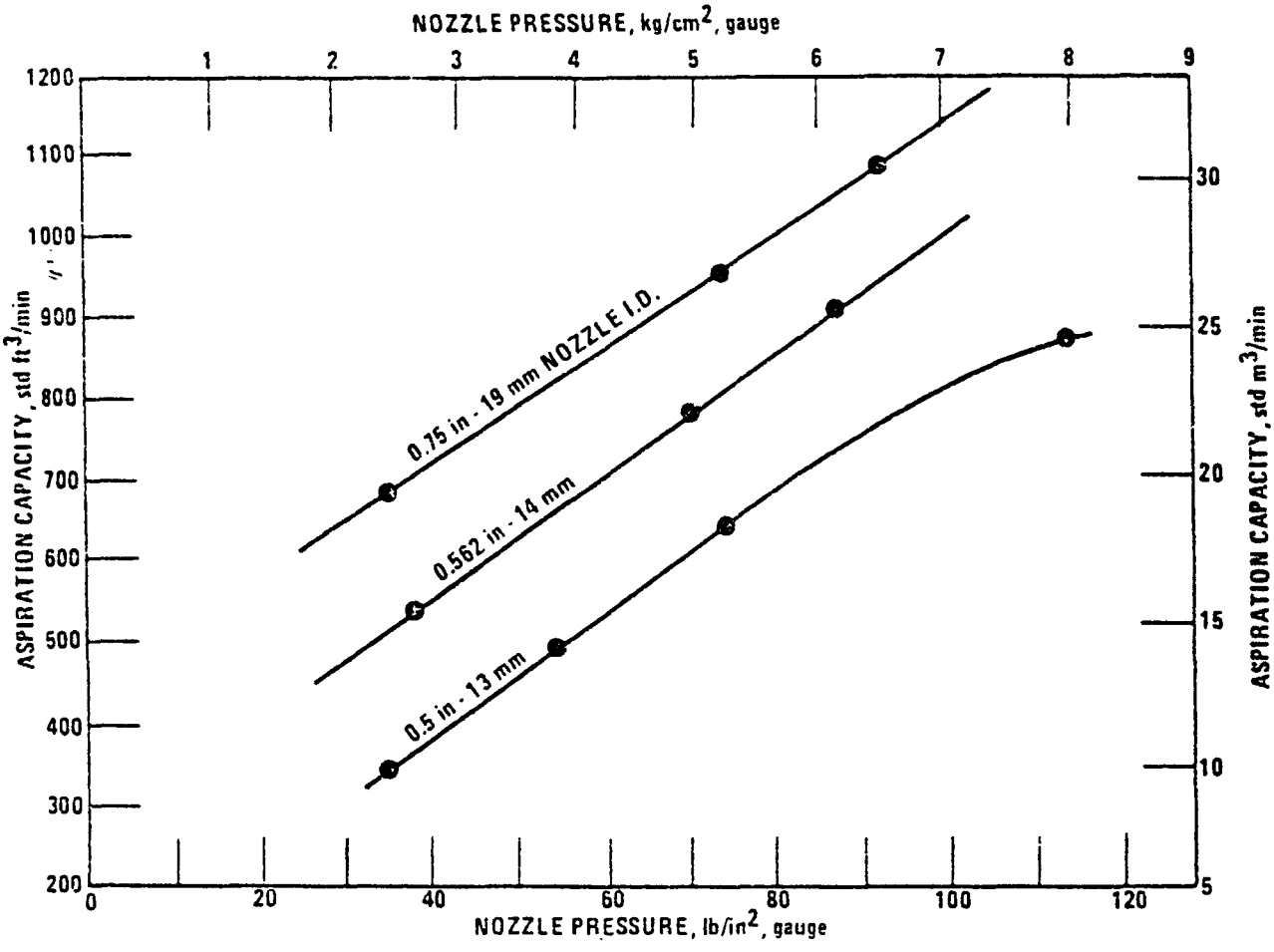

Figure 4-3. Aspiration capacity vs nozzle pressure for single standpipe.[12]

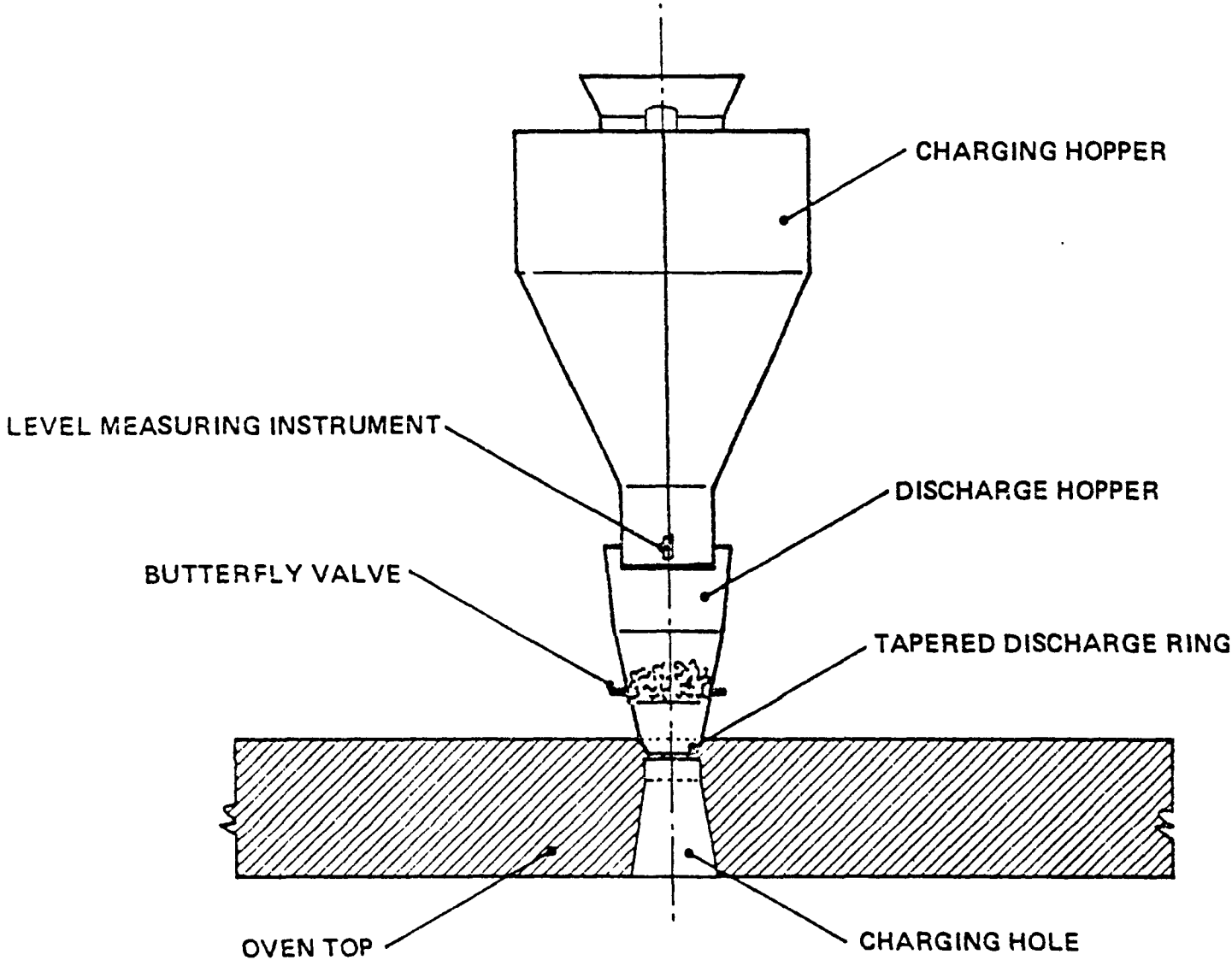

Figure 4-4. "Still-ERIN" charging system.[13]

discharge hopper closes a butterfly valve to leave a "head" of coal in each discharge hopper after its coal is discharged. The small amount of coal remaining on top of the valve helps seal the hoppers from the oven; the butterfly valves are not expected to be airtight. Each discharge hopper operates independently.

Another necessary aid used to minimize emissions is a seal which closes the opening between the leveler bar and the chuck door when the bar is in the oven. As previously discussed, any air that enters the oven thwarts the aspiration system. A seal, commonly referred to as a leveler boot, can be used throughout the charge to preclude any air intrusion at the chuck door. To operate without air leakage, the leveler bar is extended to the chuck door opening to seat the seal before initiating the charge. The opening remains sealed until the leveler bar is retracted at the end of the charge.

Even with an adequate flow of the aspirating fluid through clean nozzles, the system may fail if the standpipes and goosenecks do not provide a clear passage for the gases to flow from the oven. During the coking cycle, carbon deposits reduce the cross-sectional area of the standpipes and goosenecks. Well-controlled stage charging can be achieved only if these deposits are removed before every charge as a routine part of the charging process. Figure 4-5[12] shows the effect of carbon deposits in the gooseneck on aspiration capacity.

Carbon deposits on the roof of the oven must be removed before every charge to ensure unimpeded gas flow across the top of the oven. Figure 4-6 shows the gas flow pattern from the oven. The restriction to this flow is increased if the roof of the oven is lowered toward the coal by a heavy build-up of carbon. Typically, this roof carbon is removed by blades which are mounted on the top of the pusher ram and scrape the carbon off as the coke is pushed. High-pressure air jets mounted at the top of the ram are sometimes used to provide better cleaning. Even with all other factors at their best, failure to remove excessive roof carbon may result in poor emission control.

Another essential factor to good emission control is to ensure that the entire length of the oven is under vacuum. On a new plant, this condition can best be achieved with two mains, standpipes, and aspiration systems

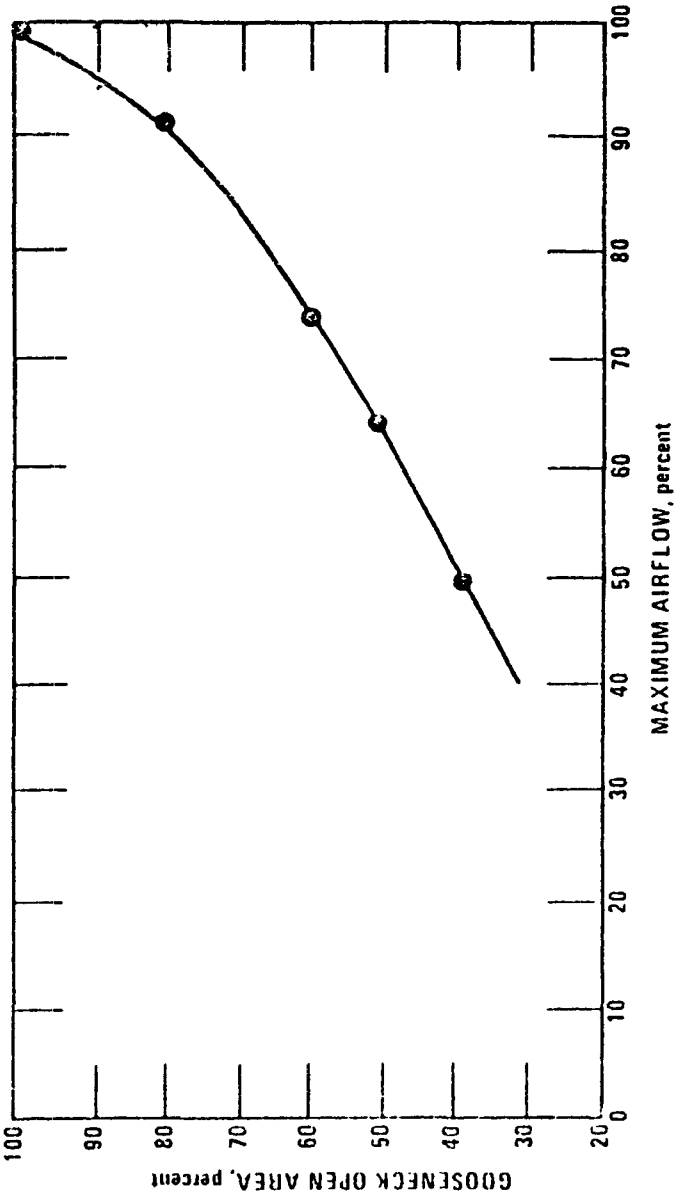

Figure 4-5. Air flow gooseneck area open in test ovens.[12]

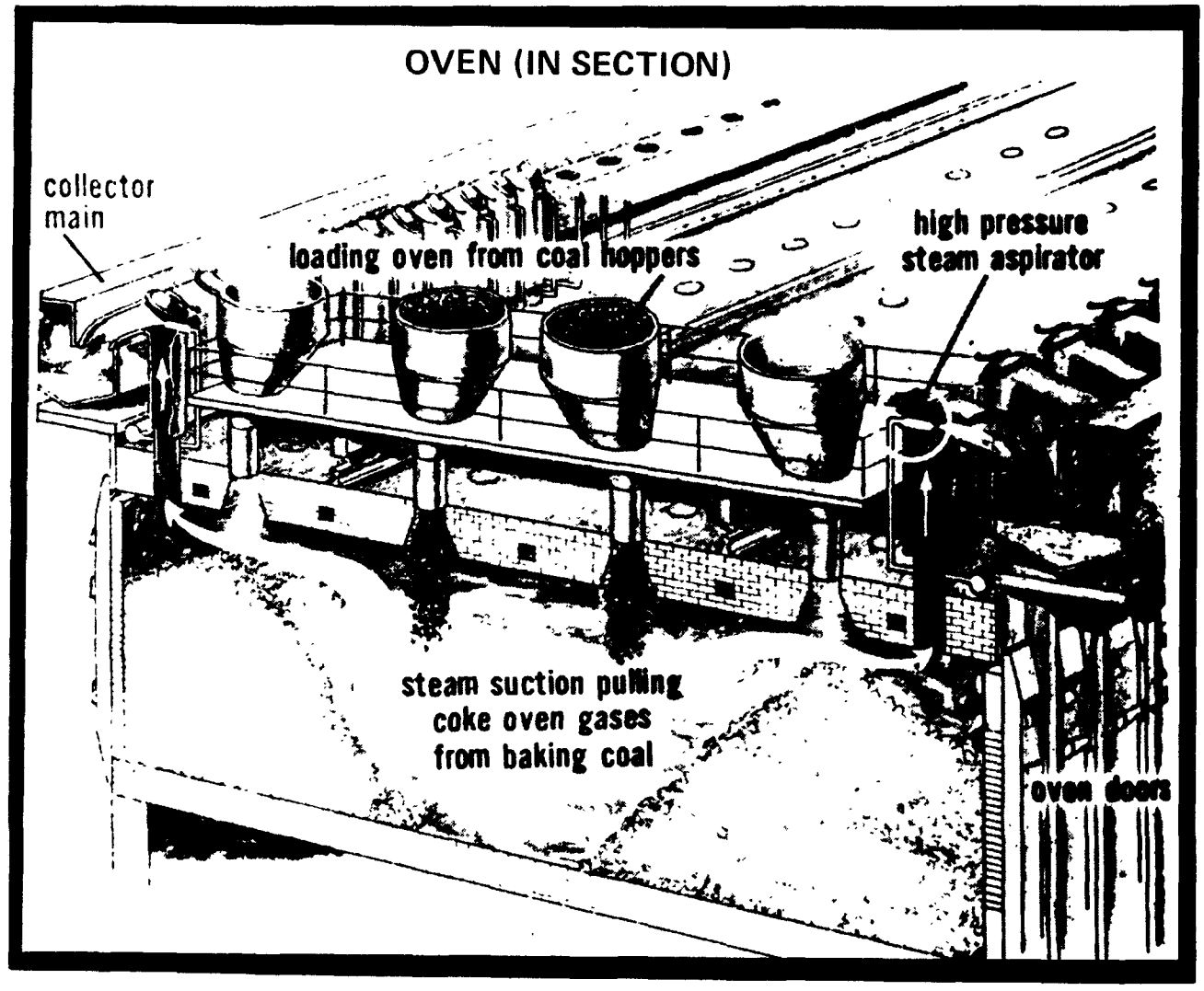

Figure 4-6. Aspiration of gases from a coke oven into the gas collecting mains.

(one at each end of the ovens) as shown in Figure 4-6. If the coal blocks the open space at the top of the oven (e.g., when coal is charged from the last hopper just before leveling) each side of the blockage will remain under vacuum. (Alternate techniques to provide aspiration to both sides of an oven that has only one standpipe are discussed later.)

An obvious design consideration is the amount of coal in each hopper of the larry car. This amount is predetermined so that the coal dumped from all but the last hopper will peak just below the "coal line." The amount of coal placed in each hopper depends on the size of the oven, the number of charging holes, and the angle of repose assumed by the coal. This angle is influenced by the bulk density of the coal, oil additives, the moisture content, and the particle size to which the coal is ground. For one domestic plant, 33.5 percent of the total charge is placed in both Hopper 1 and Hopper 4, 20 percent is placed in Hopper 2, and 13 percent is placed in Hopper 3. These percentages vary from plant to plant, depending on the previously mentioned factors. A given plant may have to alter its scheme occasionally as coal properties change. The heights of the coal peaks should be checked periodically.

Just before the coal is charged, the larry car must be accurately aligned over the charging holes. Poor alignment can result in spillage of coal on the top of the battery where the coal is heated and excess emissions are produced. A poor fit between the drop sleeves and charging hole permits excessive air leakage into the oven. Air drawn into the oven may overpower the aspiration system. When the gas volume exceeds the capability of the aspiration system, pressure will rise elsewhere in the oven, and emissions may escape to the atmosphere.

Although independently charging the coal from each hopper gives the most assurance of successful emission control, an alternative technique has been witnessed at U.S. Steel, Gary where the two outside hoppers are charged simultaneously.[8] The remaining hoppers are then charged one at a time. The distance between the end charging ports on four- or five-hole ovens allows only minimal interference with formation of the coal pile at one end of the oven by coal entering the other end of the oven. (This minimal interference may not occur on an oven with only three charging holes.) However, the rate at which gases are aspirated from the oven may need to be increased.

The larger quantity of coal entering the oven for the same length of time will result in a higher rate of gas generation. At the National Coal Board Avenue Plant in Sheffield, England, this technique and charging each hopper one at a time were both observed.[14] There was no apparent difference in the degree of control achieved, perhaps because the flow of aspirating steam was more than adequate. This tradeoff between consumption of aspirating steam and the duration of the charging process must be resolved by the owner.

A production benefit of charging the two outside hoppers simultaneously is that it speeds up the charging operations. Figure 4-7 shows the difference in time to use stage or conventional charging procedures. Although the data are limited and charging time may vary from plant to plant, the data indicate that conventional charging has a comparative advantage over stage charging in terms of reduced charging time. However, at domestic plants, the charging operation is not typically the limiting factor in attaining higher production rates on the smaller 3- or 4-meter ovens. Pushing, door cleaning, or quenching operations are more often the limiting factors; consequently, the benefit of reduced charging time may not be significant. However, the increased time required for stage charging may be significant for the taller 5- or 6-meter batteries containing over 70 ovens that are serviced by only one larry car.

Gravity is commonly used to induce coal flow in stage charging; however, mechanical feeders are also used. A variable speed drive on the feeders would allow the charging rate to be controlled.

Leveling begins before the last hopper is emptied and the last lid is replaced. During leveling of the coal charge, leakage must be controlled at the chuck door where the leveler bar enters the oven. Air induced through an open chuck door can completely overpower the aspiration on that end of the oven. (A charge was observed at the Sheffield, England, plant[14] where the chuck door was inadvertently left open. All of the air pollution control benefits of the stage charging used at this plant were lost.) In addition to maintaining the normal closing of the chuck door, the leveler boot sealing system previously discussed is available to minimize air intrusion when the leveler bar is inserted.

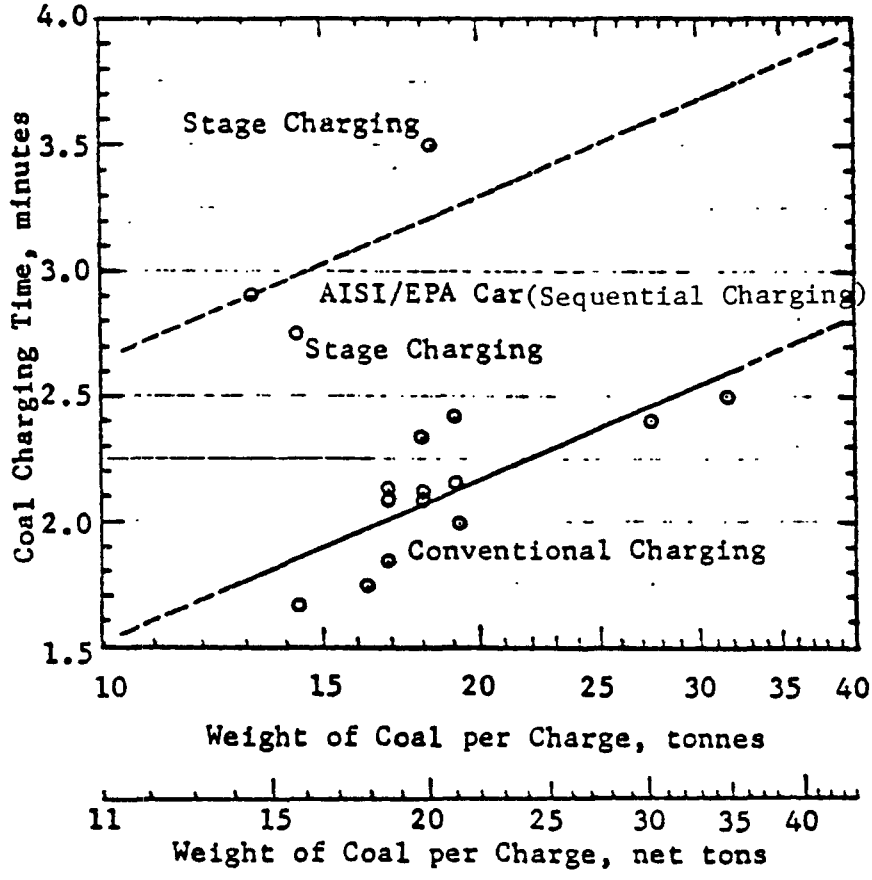

Figure 4-7. Variation in the time required to charge coal.

The value of aspiration from both ends of the oven has been emphasized. Use of double mains is the best way to achieve this type of aspiration and, for construction of new batteries, this approach will be used most. However, there is an alternative method of drawing a vacuum at both ends of an oven. In addition to the normal aspiration obtained from an oven with a single main, a jumper pipe can be placed between the end of the oven opposite the main and a neighboring oven (ordinarily two ovens away). Aspiration applied to the neighboring oven will effect a vacuum on the oven being charged. To provide maximum suction through the jumper, the neighboring oven should be near the end of its coking cycle when the least amount of gas is evolving. One or two ovens at one end of the battery may not be served by this procedure, but permanent jumpers may be installed to overcome this problem.

As presented in a recent report,[15] several alternative designs for a jumper are listed below.

- Connect the jumper between "smoke holes" (extra holes placed in the top of each oven opposite the main) on the oven being charged and the neighboring oven.
- Connect the jumper to a charging hole and discontinue its use for charging. Usually the third hole from the main (in a four-hole oven) is used. In this design and in the following designs, the other end of the jumper duct connects to the corresponding charging hole on a neighboring oven.
- Manifold two or more charging holes via the shrouds or hoods around the holes and connect the jumper to this manifold.
- Connect the jumper to the shroud around a single charging hole (usually the farthest hole from the main).

The latter three alternatives can be used on the last oven in a battery only if the jumper is designed to extend from either end of the larry car.

The batteries at U.S. Steel, Fairfield, which EPA visited, use the third alternative on a battery containing ovens with four charging holes.[15] The first and fourth drop sleeves of the larry car are manifolded and the jumper is attached at right angles to the manifold at the drop sleeve farthest from the main. A jumper can be seen on the right side of Figure 4-8. At this plant, the jumper is connected after the drop sleeves are lowered and aspiration is turned on at the oven to be charged and at the neighboring or "jumper" oven. The jumper is connected to the fourth charg-

Figure 4-8. Jumper pipe.

ing hole on the second oven from the one being charged and is not removed until all lids have been replaced on the oven being charged. Other than connection of the jumper, the stage charging procedures are similar to those on a double-main battery.

Stage charging achieves a marked reduction in emissions by aspiration of air into the by-products system from points where otherwise pollutant gases and smoke are emitted. The aspiration steam and the inspired air significantly affect the by-product plant. Furthermore, aspiration can cause coal fines to be entrained into the by-product system. The steam increases the wastewater load, the air increases the density and reduces the heating value of the coke oven gas, and the coal fines tend to reduce the acceptability of the coal-tar pitch to the manufacturers of carbon or synthetic graphite electrodes, a major end use. Careful attention to the selection of nozzle dimensions and steam pressure, coupled with adherence to procedures which avoid needless leakage of air into the system, can usually decrease the problem of coal fines. The primary cooler system usually removes tar "sludge" containing the coarser coal particles.[16]

The increased density and reduced heating value of the coke oven gas, resulting from aspiration, affect burner operation on some ovens. Good coke oven gas has a heat content of 21 MJ/m^3 (550 Btu/ft^3). One plant reports that the heat content of their gas was 15 MJ/m^3 (400 Btu/ft^3).[17] For burners designed with little tolerance, problems in maintaining oven temperature may occur. Careful operation and use of smoke boots on the leveler bar (leveler boot) and drop sleeves to seal openings to the atmosphere will make these problems manageable.

4.1.1.2 Equipment and Engineering Requirements. Some engineering problems are encountered when existing batteries are retrofitted to stage charging. These problems are not easily categorized because coke oven batteries have been traditionally constructed on an individual basis with few attempts at standardization or repetition of construction details. One of the most difficult problems encountered is batteries with inadequate clearance between the coal bunkers and the battery top; this prevents the simple modification of the hopper size essential to stage charging. However, other battery modifications can be made, though they may be costly.

A list of major equipment modifications is given in Table 4-1. Although larry car modifications and aspiration equipment are required at most batteries, not all batteries will have to make each modification or addition listed in Table 4-1. In one survey of 122 batteries at 30 plants, no one took the position that they could not modify or retrofit for stage charging. The unanimous verdict of all sources contacted was that retrofitting for stage charging is a sometimes difficult engineering feat, which will be limited only by economic considerations.[17]

Some examples of retrofit problems identified in that same study are discussed in this section. As mentioned previously, the most difficult equipment modification may be associated with the coal bunker. The larger coal capacity in the outer hoppers of the larry car is usually accomplished by increasing the height of the hoppers, but the larry car must move under the bunker to be filled. In some cases, it is not possible to design a modified larry car that will fit under the bunker. To solve this problem, the bottom structures of some bunkers have been modified to obtain the necessary vertical clearance. If this method is not feasible, then the solution is to jack up the bunker--a more drastic and costly procedure.[17]

To obtain the necessary volume in the outer hoppers, the cross section can be changed to an oval, rectangular, or "bathtub" shape. Another technique is to increase the volume and supply screw feeders.[17]

Many older larry cars are equipped with unsuitable mechanisms for drop sleeves. Such mechanisms operate the drop sleeves of all hoppers either partially or entirely in common. To achieve effective stage charging, the operators of the larry car must be able to control each drop sleeve independently. The former system can be modified as desired, without replacing the larry car.

Each specific battery must solve its own particular problems with respect to coal flow which will vary with coal type and climate. Charging options include feeding by gravity, turntable, or screw. The addition of oil to the coal to stabilize the bulk density and use of vibrators in the hoppers are other options.

An increase in aspiration to draw the smoke into the gas collecting system is often required. This increase is accomplished by increasing the pressure of the steam and/or the size of the steam nozzles. Frequently the

TABLE 4-1. EQUIPMENT REQUIREMENTS FOR STAGE CHARGING

Larry car modifications

- Independently operated drop sleeves
- Independent hopper control of coal flow
- Hoppers with sufficient excess capacity to accept redistribution of the coal load
- Automatic lid lifters or access to the charging holes without moving the car
- Adjustments on the larry car hoppers to assure accurate coal volumes

Aspiration equipment

- Double drafting with either a second collecting main or a jumper pipe for single collecting main batteries
- Steam headers, lines, and nozzles
- Mechanical gooseneck cleaner
- Decarbonizing air and scraper
- Leveler bar seal
- For some batteries, increased boiler capacity, standpipe straightening, and increased exhauster capacity (to handle the increased load caused by aspiration) are necessary

Battery modifications (not required for all batteries)

- Modify coal bunker to accommodate new larry car
- Reset or replace lid rings
- Repave top and realign larry car tracks

increased aspiration requires larger steam headers and occasionally it requires new boilers. Adequate aspiration also requires an appropriate type of gooseneck and damper. The gooseneck may have to be replaced, and the older Corliss valves will usually have to be replaced. This valve design restricts aspiration and is easily rendered inoperable by the carbon and tar build-up that falls into it when the goosenecks are cleaned.[17]

Another retrofit consideration is the possibility of adding a second collecting main instead of using a jumper pipe for double drafting. A second collecting main might provide slightly superior aspiration because the jumper pipe would be connected to an oven that still contains coke. In 1978 only two batteries had been retrofitted with second mains. According to Koppers and Wilputte, the two major coke oven builders, the construction problems may be very difficult. Both of these retrofitted batteries had existing brickwork which was readily adapted for a second offtake. Some ovens do not have this feature because of a flue which crosses over the top of the oven and makes the installation of a second offtake difficult.[18]

The second main requires structural support and has to be fitted into the space occupied by the larry car hot rails and other equipment. Supplying the flushing liquor to the second main is another consideration. Because the collecting and crossover mains carry both liquid and gas, the liquid must be drained from the main and around the end of the battery to merge with the existing crossover mains. The demand for a double supply of flushing liquor may require additional pumps and a new supply system. Extensive and elaborate control systems may also be required to maintain the delicate pressure balance needed to prevent gas from recirculating in the ovens.[18]

4.1.1.3 Optimizing Stage Charging. The basic operating techniques and equipment requirements for stage charging have been discussed in detail in previous sections. Each specific battery may need to incorporate other changes to "fine tune" their performance at stage charging. Battery conditions, worker attitude, and training vary at each location. An engineering study and evaluation at each individual battery or coke plant may be necessary to determine the required minor improvements. At CF&I, such a study resulted in improved written procedures, better worker training, and a few minor additional equipment changes to demonstrate exemplary control of

charging emissions.[19] U.S. Steel also conducted an extensive engineering study at their Clairton batteries to optimize emission control from stage charging.[12]

The performance of the battery top workers is critical to achievement of exemplary control of charging emissions. A detailed, written procedure, an effective training program, and coordination of the battery top worker's activity are required. A few of the important worker job functions are listed below.

- Inspection and cleaning of the gooseneck.
- Prompt lid replacement.
- Prompt luting of lids.
- Turning the aspiration system on and off.
- Observing the position of drop sleeves.
- Spotting the larry car.
- Notifying the larry car operator if the car is improperly spotted.
- Continuing a program of cleaning and maintenance.
- Consistently following operating procedures.

A study of a specific battery's operation would aid in developing an optimum written procedure and effective training program. In addition, the study may reveal minor equipment modifications that are peculiar to that specific battery and may dramatically improve control. For example, CF&I discovered that altering the steam nozzles improved aspiration for their particular case. The company also discovered that constructing a platform for inspecting goosenecks improved the gooseneck inspection and cleaning procedure. Worker coordination, training, and communication were also improved.[19]

After the engineering study and the physical changes that were made to allow stage charging, U.S. Steel at Clairton implemented extensive training, observation, and monitoring programs. Each member of the charging crew was individually trained in the stage charging procedure, and following the training session, each crew member was observed to determine if additional training was required. Additional personnel were hired to monitor visible emissions, to investigate unsatisfactory charges, and to identify and correct the causes of poor charging performance. U.S. Steel attempted to increase motivation and improve working relationships through the use of

awards and a crew/foreman concept. U.S. Steel awarded employees who exhibited superior performance in their smoke abatement efforts. The crew/foreman concept consisted of assigning the foreman and crew members to the same 5 working days. An additional supervisor was added to each line of operating batteries to provide increased supervision for the topside operation.

4.1.1.4 Performance of Optimized Stage Charging. Mass emissions from stage charged ovens have not been measured because of the complexities and expense that such measurements would entail. Consequently, the performance of emission controls for charging must be judged on the basis of visible emissions. EPA gathered data by measuring the cumulative length of time that emissions were visible during charging. This method is described in Appendix D.

The batteries at CF&I and U.S. Steel, Clairton have implemented the equipment modifications and operating procedure for stage charging. In addition, the technique was optimized by conducting an engineering study and by implementing the items described in the preceding section.

Visible emission data for these two batteries are summarized in Table 4-2. As emphasized in earlier sections, the degree of control achieved with stage charging depends on operating procedures and many other factors. The data show that the level of stage charging control varies at U.S. Steel, Clairton where all batteries are physically equipped to use stage charging. The batteries at CF&I and U.S. Steel, Clairton have undergone stage charging optimization, which includes an engineering study, detailed training and operating procedures, visible emission observers who provide feed-back to supervisory personnel, and minor equipment changes. The cause of the variability could not be isolated and it appears to result from normal battery-to-battery variations. Subtle differences in construction features, equipment, or worker effort could contribute to the variability. Another possible influence that is difficult to identify or measure is the battery operator's incentive to control emissions at a level that is lower than the legally required level. For example, the Clairton batteries in the data base, except for Battery 20, have an existing regulation of 75 seconds of emissions for four charges, or about 19 s/charge. Table 4-2 indicates that the average performance of each of the Clairton batteries is much less than 19 s/charge.

TABLE 4-2. SUMMARY OF VISIBLE EMISSION DATA ON OPTIMIZED STAGE CHARGING

Company	Battery	Date	Average (s/ charge)	Range (s/ charge)	Number of charges
CF&I, Pueblo[7]	B	7/77	5.4	0-25	92
U.S. Steel, Clairton[20]	1	2/80	8.6	2-82	20
	2	8/79	9.0	2-23	55
	3	2/80	7.8	3-15	16
	7	2/80	7.6	3-12	16
	8	2/80	8.9	3-16	16
	9	2/80	8.4	3-20	16
	10	2/80	8.8	2-46	16
	11	2/80	11.6	3-29	16
	16	8/79	1.0[a]	0-13	28
	17	8/79	1.2[a]	0-10	32
	19	2/80	6.8	2-14	16
	20	8/79	12.0	2-127	65
	21	2/80	13.1	1-96	18
	22	8/79	6.6	1-41	62

[a]Run-of-the-mine (nonpulverized) coal was charged.

The batteries of CF&I and U.S. Steel, Clairton have double collecting mains and are less than 5 meters in height. Because batteries vary within the industry, these batteries do not represent all of the potentially important construction features that may affect emissions. According to available data, no other plants have implemented a detailed program of optimization like that reported by CF&I and U.S. Steel, Clairton. However, batteries that had implemented the basic stage charging equipment and operating procedure were identified.

The data for batteries that have implemented the basic aspects of stage charging are summarized in Table 4-3. The battery at Bethlehem, Burns Harbor is 6 meters in height with a double collecting main, four charging holes, mechanical feed, and magnetic lid lifters. The batteries at Jones & Laughlin (J&L), Pittsburgh have short ovens (less than 5 meters) with three charging holes, a single collecting main, a jumper pipe, and mechanical and gravity feed for charging. The battery at Lone Star Steel is a tall battery (5 meters in height) that was constructed in 1979 with a double collecting main. The battery at National Steel, Weirton is 6 meters in height with a double collecting main, mechanical feed, and automatic lid lifters. The batteries at Shenango, Inc. have short ovens with three charging holes, a double collecting main, gravity feed, and an extended 30-hour operating cycle. The batteries at U.S. Steel, Fairfield are short batteries with a single collecting main, gravity feed, and four charging holes. Battery 9 at U.S. Steel, Fairfield was recently rebuilt in 1979 and it has a mechanical gooseneck cleaner. Battery 1 at U.S. Steel, Gary is a 6-meter battery which was retrofitted with a second collecting main. This battery has four charging holes, magnetic lid lifters, and mechanical feed for charging. The batteries in Tables 4-2 and 4-3 represent the following industry variations which may affect emissions.

- Koppers, Koppers-Becker, and Wilputte ovens.
- Ovens that are 3 to 6 m in height.
- Single and double collecting mains.
- Three or four charging holes.
- Older (after 1951), rebuilt, and new batteries.
- Gravity and mechanical feed.

TABLE 4-3. SUMMARY OF VISIBLE EMISSION DATA ON BASIC STAGE CHARGING

Company	Battery	Date	Average (s/ charge)	Range (s/ charge)	Number of charges
Bethlehem Steel, Burns Harbor[21]	2[a]	5/80	10.8	1 - 43	25
J&L, Pittsburgh[22]	P2	12/78	9.5	4 - 29	8
		8/79	5.4	0 - 14	9
	P4	8/79	6.2	2 - 11	10
Lone Star Steel[23]	C[b]	10/79	7.4	2 - 15	30
National Steel, Weirton[24]	1[a]	8/81	13.5	3 - 43	21
		6/82	10.2	2 - 28	20
Shenango, Neville Island[25]	3	10/80	6.1	1 - 23	20
	4	10/80	6.6	3 - 11	20
U.S. Steel, Fairfield	6	9/75[26]	8.0	3 - 24	15
		12/76[26]	9.9	1 - 185	91
		6/79[27]	10.0	2 - 34	20
	9	6/79[27]	5.4	1 - 38	50
U.S. Steel, Gary[8 11]	1[a]	6/76	10.5	0 - 44	41
		11/77	14.6	0 - 150	65

[a]A 6-meter battery.

[b]A new 5-meter battery.

- Manual and automatic lid lifters.
- Different geographical locations and times of the year.
- Variety of coking coal sources.
- Coal sizes include nonpulverized and 65 to 81 percent less than 0.3 cm (0.125 in).

A discussion of these features and possible effects on the control of charging emissions follows the data analysis.

The charging data were collected by EPA personnel or their contractors during official EPA inspections. Most of the EPA inspections were conducted to determine the battery's compliance status in relation to existing State regulations and consent decrees; a few inspections were conducted to document emission control performance only. Preference was given to data collected during official EPA inspections because operating conditions, equipment failures, and deviations from good work practice were generally noted on raw data sheets or in written reports. Also, during the enforcement inspection, it is assumed that the source is trying to achieve good performance.

All of the data presented in Tables 4-2 and 4-3 were taken under conditions which were considered normal for the batteries that were inspected. The only data points that were deleted from the summary in Tables 4-2 and 4-3 were those where the observer reported interference, usually from fugitive emissions from other sources. Those data points where the observer noted equipment failure or lapses in good work practice are included in the data base because these lapses and failures have been observed in the normal operation of the best controlled batteries. Descriptive information on each battery and a complete data listing are given in Appendix C with observer comments on individual measurements.

A statistical analysis of the data revealed the following:

- There is no significant difference in the performance of single- and double-main batteries,
- There is a significant difference in the performance of short and tall batteries,
- The data are not normally distributed, and
- A logarithmic (log) transformation yields normally distributed data.

The data are not normally distributed primarily because of occasional high readings of seconds of visible emissions. A logarithmic transformation of ln (X + 1), where X = seconds per charge, was used to allow the application of normal statistics. The results of the statistical analysis are summarized in Table 4-4. Log averages were calculated with the equation:

$$\text{Log average} = e^{Y} - 1$$

where:

$$Y = \frac{\ln (X_1 + 1) + \ln (X_2 + 1) + \ldots \ln (X_n + 1)}{n} ,$$

X = seconds of visible emissions, and

n = number of observations.

A 95-percent confidence level was calculated for each battery, based on the log average of 10 charges in an inspection. The 95-percent confidence level means that the battery should be able to attain that level of control 95 percent of the time. If an emission limit is based on a given battery's performance at the 95-percent confidence level, then there is a 5 percent probability of citing another battery in violation when it is controlling emissions as effectively as the given battery.

A significant difference was found in the performance and variance components for short and tall batteries. Possible explanations for this difference are discussed later in terms of physical characteristics of the two types of batteries. The variance used to estimate the confidence level for short batteries (less than 5 meters in height) was a pooled variance from all of the short batteries; similarly, a pooled variance for tall batteries (5 meters or greater in height) was calculated from the tall battery data. The variance components included the variance between charges within days, observers within charges, and days. The major variance component was between charges, and the smallest variance component (less than 10 percent) was the variance between observers within charges.

The best performance in terms of log average were U.S. Steel's Batteries 16 and 17 at Clairton, but these batteries were using run-of-the-mine coal which is not routinely used by the industry. The best performance (95-percent log average) for short batteries representing retrofitted,

TABLE 4-4. STATISTICAL RESULTS FROM CHARGING DATA

Company	Battery	Arithmetic average (s/charge)	Log average (s/charge)	95-percent level (log average, s/charge)
U.S. Steel, Clairton[a]	16	1.0	0.5	1.2
	17	1.2	0.8	1.7
U.S. Steel, Fairfield	9	5.4	4.0	6.7
CF&I, Pueblo[a]	B	5.4	4.5	7.4
U.S. Steel, Clairton[a]	1	8.6	4.8	7.9
	22	6.6	5.1	8.3
Shenango, Neville Island	3	6.1	5.1	8.4
J&L, Pittsburgh	P2	7.3	5.6	9.1
	P4	6.2	5.6	9.1
U.S. Steel, Clairton[a]	10	8.8	6.0	9.8
	19	6.8	6.1	9.9
Shenango, Neville Island	4	6.6	6.2	10.0
U.S. Steel, Fairfield	6	10.0	6.8	10.9
U.S. Steel, Clairton[a]	3	7.8	6.9	11.2
	7	7.6	7.3	11.6
	21	13.1	7.3	11.7
	9	8.4	7.5	12.0
Lone Star Steel	C[b]	7.4	6.6	12.0
Bethlehem Steel, Burns Harbor	2[b]	10.8	6.9	12.5
U.S. Steel, Clairton[a]	2	9.0	7.7	12.4
	8	8.9	8.1	13.0
	20	12.0	8.1	13.0
U.S. Steel, Gary	1[b]	13.0	8.4	15.0
National Steel, Weirton	1[b]	11.9	9.0	16.1
U.S. Steel, Clairton[a]	11	11.6	10.1	16.1

[a]These batteries used the optimization of stage charging described in Section 4.1.1.3.

[b]Tall (5- or 6-meter) batteries.

rebuilt, single-main, and double-main batteries is a log average of 8 s/charge for 10 charges. These representative batteries are Battery 9 at Fairfield, Battery B at Pueblo, and Battery 1 at Clairton. The representative tall batteries in the data base are Battery C at Lone Star Steel with a log average of 12 s/charge, Battery 2 at Burns Harbor with a log average of 12.5 s/charge, and Battery 1 at Gary with a log average of 15 s/charge at the 95-percent confidence level. The worst of the batteries in the data base was Clairton's Battery 11 which has a log average of 16 s/charge at the 95-percent confidence level. The statistical analysis also showed that no more than one charge in ten exceeded 45 seconds at the 95-percent confidence level.

The 95-percent level log average is difficult to compare with existing regulations which are expressed in terms of arithmetic averages. In all cases, the log average is smaller than or equal to the arithmetic average. A crude comparison can be made in Table 4-4 which shows that the largest difference between log and arithmetic averages is about 5 to 6 s/charge for the data base. A statistical analysis that compared log averages to arithmetic averages from the charging data base indicated that a log average of 16 s/charge was roughly equal to an arithmetic average of 20 s/charge.

Simulated data sets are given in Table 4-5 to demonstrate some of the potential differences between log and arithmetic averages. The data base for charging shows that occasional high readings are obtained from a charging inspection because of equipment failure or operator error that is a part of normal operation. Examples 2, 3, and 4 show that one or two high readings can increase the arithmetic average without significantly increasing the log average.

Battery age is one of the factors that may affect emission control. Older batteries may present more difficult control problems because of shifting of brick, alignment problems, and general wear on equipment. The normal life of a battery is 25 to 30 years before a major rehabilitation, although some batteries can be operated longer than normal if they undergo a partial rebuild or minor repairs. However, Table 4-4 indicates that the performance of some older batteries can equal or exceed that of some of the newer existing batteries. For example, Batteries 1, 2, and

TABLE 4-5. COMPARISON OF ARITHMETIC AVERAGE AND LOG AVERAGE

	Example (s/charge)			
	1	2	3	4
	16	6	10	8
	16	16	10	8
	16	16	12	10
	16	16	12	10
	16	16	16	12
	16	16	16	12
	16	16	16	14
	16	16	16	14
	16	16	16	72
	16	40	68	74
Arithmetic average =	16.0	17.4	19.2	23.4
Log average =	16.0	16.0	16.0	16.0

3 at Clairton were built in 1955 and are scheduled to be rebuilt or replaced in 1986. Batteries 7, 8, 9, 10, and 11 are tentatively scheduled to be abandoned in 1983 and replaced by new batteries. Batteries 16 and 17 were built in 1951 and may be abandoned in 1982. Batteries 3 and 4 at Shenango are older batteries which were operational in 1950 and 1952 and have furnace walls that were rebuilt between 1974 and 1975. In the near future, Battery 3 may be rebuilt from the pad up.

Representatives of the steel industry have commented on several process variables that potentially affect the performance of stage charging. Two of these variables are coal moisture content and the degree of pulverization. (The potential effect of these variables on uncontrolled emissions is discussed in Chapter 3.) The exact magnitude of the effects of these variables cannot be determined because they are masked by the effects of many other factors which influence the performance of stage charging. However, available evidence indicates that the effect of these variables may be small relative to other factors such as equipment configuration, work practice, worker effort, or steam aspiration.

EPA attempted to delineate the possible effect of coal moisture content and the degree of pulverization by measuring emissions at two plants with similar control systems and procedures where coals with different moisture content and fineness were used. Table 4-6 presents these data.[28] Bethlehem Steel's Rosedale plant actually had less emissions than the Bethlehem Steel plant at Franklin, although the Rosedale plant charged drier and slightly finer coal than the Franklin plant (5.5-percent moisture compared to 7.8-percent moisture and 79.5 percent less than 0.3 cm (0.125 in) in size versus 76.8 percent). This result is opposite to the expected trend of increased emissions when drier and finer coal is used.

In addition, a distinct difference is evident in the degree of control achieved on different batteries. Although the data are not conclusive, they indicate that if moisture content or degree of pulverization has an effect, it is overshadowed by other process or operating variables which more significantly affect the performance of stage charging.

TABLE 4-6. VISIBLE EMISSION DATA FOR THE BETHLEHEM PLANTS AT JOHNSTOWN[a28]

Plant and date	Battery number	Number of charges observed	Duration of visible emissions (seconds)	
			Average	Range
Franklin[b] 09/24/74	17	3	142	125 - 172
	18	33	73	15 - 217
Rosedale[c] 09/25/74	15	16	74	17 - 167
	16	15	34	11 - 78

[a]The data at these plants were recorded by two to four observers. Complete results are presented in Appendix C.

[b]Coal analysis: 7.8 percent moisture; 76.8 percent less than 0.3 cm (0.125 in) in diameter.

[c]Coal analysis: 5.5 percent moisture; 79.5 percent less than 0.3 cm (0.125 in) in diameter.

Experience at the National Coal Board Avenue Plant in Sheffield, England, supports the contention that neither the moisture content nor the fineness of the coal has a significant effect on the performance of stage charging. Personnel at the plant stated that they have charged coal with a moisture content as low as 1 percent and fineness as high as 80 percent less than 0.3 cm (0.125 in) without a noticeable difference in emissions from stage charging.[13]

EPA could not find any trend in the industry toward use of finer-ground or lower-moisture coals. Engineering firms that construct new coke oven batteries indicated that their customers have not told them to design for finer coals or lower moisture contents on future installations. The data in Tables 4-2 and 4-3 represent a range of coal fines from 65 to 81 percent less than 0.3 cm (0.125 in). The other extreme of pulverization would be the charging of run-of-the-mine (nonpulverized) coal. Results from U.S. Steel Batteries 16 and 17 at Clairton show that nonpulverized coal has no detectable adverse effect on charging emissions. These batteries provided the lowest readings of visible emissions from charging.

The use of tall ovens may cause more charging emissions. Most new batteries are constructed with 6-meter ovens with a volume of approximately 40 m^3 (1,400 ft^3), or about twice the volume of 3- to 4-meter ovens. Because of this larger coal capacity, about twice the volume of gas will be displaced from the oven during charging, and a larger volume of gasification products will be released because more coal contacts more hot refractory. In addition, tall ovens have a higher thermal head, i.e., the rising gases in the oven achieve a higher velocity because of a greater stack effect.

Tall ovens also require a longer charge time which increases the potential for emissions. The smaller ovens have three to four charging ports which are 0.35 to 0.41 m (14 to 16 in) in diameter; 6-meter ovens have charging ports that are generally 0.46 m (18 in) in diameter. Although twice the volume of coal is handled in the 6-meter ovens, the cross sectional area for coal flow is only about 25 percent greater (comparing a 16-inch diameter to an 18-inch diameter for the same number of ports per oven). For example, CF&I charges 4-meter ovens with a

mechanical feed in about 4 min; U.S. Steel, Fairfield Battery 6 (4-meter) charges with gravity feed in about 5 min; and U.S. Steel, Gary Battery 1 (6-meter) with mechanical feed requires about 6 min. The factors mentioned in the preceding paragraphs indicate that a double collecting main may be necessary for tall ovens to minimize the potential for overloading the aspiration system.

The data analysis and information in Table 4-4 indicate that several short batteries controlled charging emissions better than the two tall batteries at Lone Star Steel and U.S. Steel, Gary. However, the performance of Battery 1 (6-meter) at U.S. Steel, Gary and Battery C (5-meter) at Lone Star Steel is better than the worst performance of the short batteries with optimized stage charging at U.S. Steel, Clairton.

Use of single or double collecting mains is another factor that may affect emissions. Double mains may provide more aspiration for removal of the potential pollutants to the by-product recovery system. The batteries at J&L, Pittsburgh and U.S. Steel, Fairfield use a single collecting main with a jumper pipe connected to an adjacent oven. The data in Table 4-4 and the statistical analysis indicate that the control performance of single-main batteries is not significantly different than that of double-main batteries.

Several other variations among batteries were examined and no significant differences in control performance were found. For example, the batteries listed in Table 4-4 represent a variety of coking coal sources from Alabama, Colorado, Indiana, Pennsylvania, and Texas. Batteries with three or four charging holes, gravity or mechanical feed for charging, manual or automatic lid lifters, and operation during the summer and winter are also included in the list. These factors may have an unquantified effect on emission control. However, the data indicate that any adverse effects from these variations are apparently controlled by implementing the recommended equipment changes, operating procedures, and optimization.

All of the previous discussion in this section is based on the observation and measurement of visible emissions. This limitation was necessary because of the absence of data on mass emissions from stage charging for varying seconds of visible emissions. Some explanation of

the relation between mass emissions and the duration of visible emissions is necessary. During observation of stage charging, EPA observers noticed that on good charges (a small duration of visible emissions), the emissions were generally small wisps or puffs which drifted out from around the drop sleeves on the larry car. (Figure 4-9 shows a typical puff.) For charges where the duration was higher, the character of the emissions changed to clouds of smoke which escaped to the atmosphere with higher velocities. Generally, the length of the duration and the number of larger clouds increased proportionately. When the length of the duration increased, fewer wisps were seen. The mass in 40 seconds of wisps is probably about twice that of 20 seconds of wisps; therefore, 40 seconds of mixed wisps and clouds must be more than twice the mass of 20 seconds of only wisps.

4.1.2 Sequential Charging

4.1.2.1 Description. Stage and sequential charging are often confused. The procedure called stage charging in the United States is called sequential charging in England where the procedure was first developed. The following definitions were the basis for this document, and they correspond to the most common usage in the United States.

- Stage charging--a procedure where a maximum of two hoppers are discharging at the same time (as described in Section 4.1.1).
- Sequential charging--a procedure where the first hoppers are still discharging when subsequent hoppers begin dumping. (This faster charging procedure uses an automatic sequence to start the discharge of coal from the hoppers.)

In both procedures, the oven is under aspiration. All the considerations presented for stage charging in the previous section apply to sequential charging. Although the difference between the two procedures seems quite small, it may be very significant in effective control of emissions.

The sequential charging procedure is designed to shorten charging time and to provide a level coal charge, thereby reducing the opportunity for blocking the free space at the top of the oven. On an oven with four charging holes, the two outside hoppers usually are discharged simultaneously, the third hopper begins discharging 10 to 20 s after the two outside hoppers, and the last hopper discharges 10 to 20 s later.

Figure 4-9. A "puff" of emissions during stage charging.

The American Iron and Steel Institute (AISI) and EPA jointly developed and demonstrated one automated sequential charging system, which is commonly referred to as the AISI/EPA larry car. The three primary components of the system are: (1) automatic sequencing of operations, (2) an air-conditioned cab (to protect the larry car operator from emissions), and (3) a single-spot coke-charging machine. A schematic illustration of the system is shown in Figure 4-10.[29] This system was developed for a battery of ovens which have only one main (and no jumper) and three charging holes. The flow of gases from the oven during charging is illustrated in Figure 4-11.

Initially, the AISI/EPA larry car was designed for fully automatic operation. However, many operations were restored to manual operation because of problems with reliability and to permit more flexibility in the charging sequence. Features of the larry car include a remote-controlled standpipe damper and steam valves and mechanized lid lifters. The following description shows the sequence of operation. (The letters in parentheses refer to Figure 4-10.)

a. The larry car hoppers are each filled with a specified volume of coal.

b. The car is moved to the oven to be charged (X) and positioned using a visual spotting target. The larryman uses a pushbutton to operate the gooseneck cleaner (E).

c. At about the same time, the pusher-machine operator removes the pusherside door of the oven to be pushed (Y) and then positions the pusher for single-spot pushing and leveling.

d. The leveler door is opened on the oven (X), and the pusher operator advances the leveler bar (B) until the smoke-seal (J) is in position against the door opening. He then notifies the larryman over the voice communication system that charging can begin.

e. The "Steam-On" pushbutton is actuated to aspirate the oven (X); it turns on aspirating steam, opens the damper, and closes the standpipe cap.

f. The drop sleeves (H) are lowered over the open charging holes with individual pushbuttons.

g. The butterfly valve (K) on each hopper is opened with individual pushbuttons.

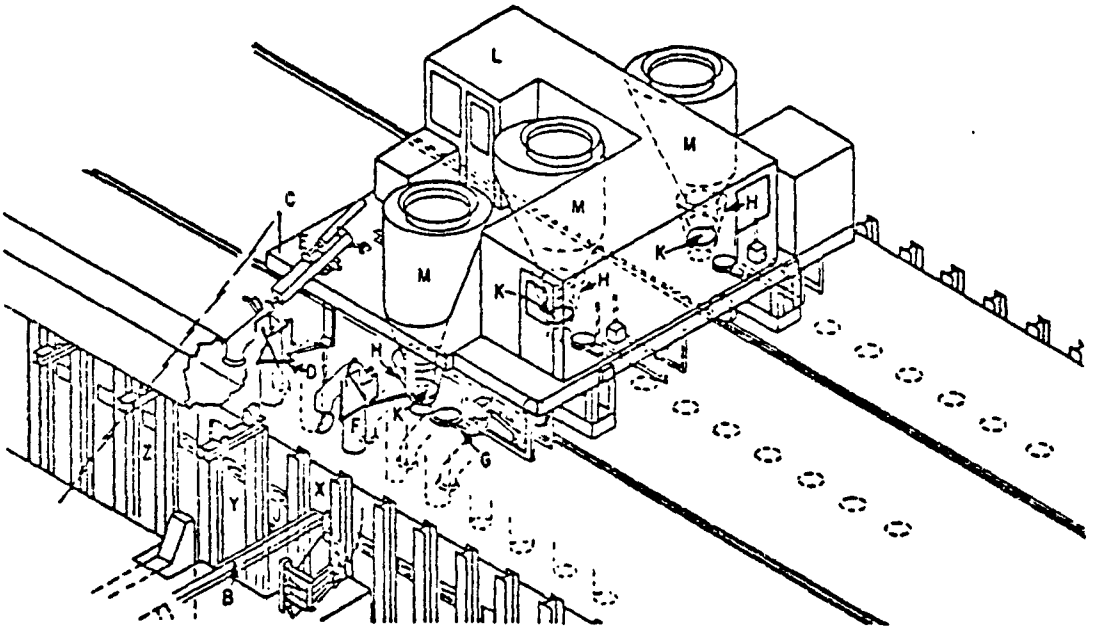

Figure 4-10. AISI/EPA larry car coke oven charging system.[29]

B. Leveler bar
C. UHF alignment device
D. Ascension-pipe damper actuator
E. Gooseneck cleaner
F. Ascension-pipe actuator
G. Lid lifters
H. Feed hopper drop sleeves
I. Leveler-door operator
J. Leveler-door smoke seal
K. Butterfly valves
L. Controlled environment cab
M. Coal hopper
X. Oven to be charged
Y. Oven to be pushed
Z. Oven to be dampered off

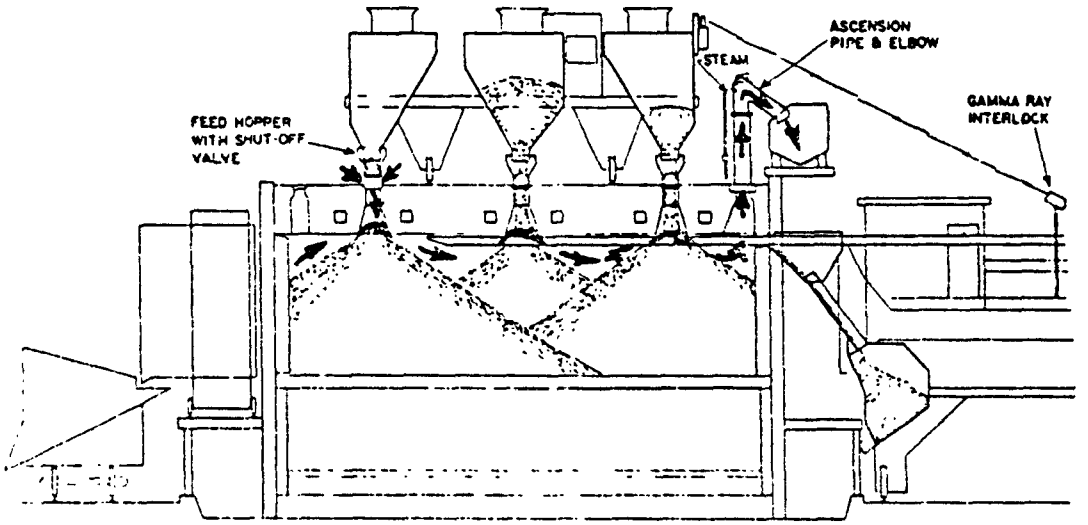

Figure 4-11. Flow of gases in the AISI/EPA sequential charging system.[29]

h. The operator manually stops the coal flow from Hoppers 1 and 2 when their indicator lights show that 75 percent of their coal has been charged. Hopper 3 is permitted to empty completely.

i. The larryman notifies the pusher operator to start leveling when the first "75-percent coal level" light turns on, provided that indicators show that coal flow has started from all hoppers. If coal flow has not started from a hopper, he initiates leveling after the 75 percent coal charge level is indicated on all three hoppers.

j. As soon as the pusherman notifies the larryman that leveling has started, the butterfly valves on Hoppers 1 and 2 are operated to complete the coal charge. As the hoppers empty, bottom-level detectors automatically close the respective butterfly valves.

k. The larryman then notifies the pusherman that all three hoppers are empty and the pusherman makes the final leveler passes before retracting the bar and closing the leveler door. The pusherman tells the larryman when the leveler door is closed so that sequential relidding (1-2-3) of charging holes can be completed.

l. The pusher operator retracts the leveler arm while the aspirating steam is still on. He then moves the pusher car to the next oven to be pushed. The aspirating steam remains on the oven just charged to protect the larry car which extends over it when spotted for the operation below.

m. The larry car operator then moves to the next oven to be charged, closes the damper in the main, and removes the lids of the oven previously pushed to decarbonize the charging holes.

n. The car then returns to the coal bin, and the lidman turns the aspirating steam off of the oven (X) which was just charged.

One significant aspect of the AISI/EPA larry car is the amount of automation used. Automation should reduce the chance of operator error and give more consistent operation from charge to charge. This error reduction should result in better emission control, which is heavily dependent on adherence to a specified procedure for both sequential and stage charging. As yet, total automation has not proved to be reliable.

4.1.2.2 Performance of Sequential Charging. Mass emissions have been measured at one installation which uses sequential charging[30] and

the AISI/EPA larry car described in Section 4.1.2. The average result of the tests is 120 grams of particulate per charge[31] (0.26 pound per charge or 0.017 pound per ton of coal charged for a 15-ton charge of coal). About half of the emissions were benzene soluble organics. To make these measurements, "emission guides" were fabricated to fit around the drop sleeves and channel the emissions to a duct of defined cross section. Samples were collected with EPA Method 5 sampling equipment at a single point in each duct. Because of the adverse sampling conditions, the results of these tests are expected to be a rough estimate of the level of system performance. The duration of visible emissions was also measured. The average duration for the longest period of observation (236 charges over 2 months) was 174 seconds.[32]

However, these results do not represent the true potential of sequential charging because they were obtained on a battery with a single main and no jumper pipe. After a jumper pipe was installed, measurements showed that the average duration of emissions for 15 charges was only 22 seconds.[33] These data dramatically show the necessity of two-way drafting of the oven to achieve a high level of performance. Use of the Still-ERIN discharge hoppers, the effects of coal moisture content and degree of pulverization, and use of tall ovens (discussed in Secton 4.1.1.4) are important to sequential charging.

One additional factor may be significant in consistently achieving good charges with the sequential technique. A disruption of coal flow from one hopper will change the pattern of coal piles in the oven, thus increasing the potential for blockage in the open space at the top of the oven. If the flow of coal from one hopper stops, the coal from the remaining hoppers will fill part of the oven volume intended for the coal that stopped flowing. When the flow of this coal resumes, it will cause blockage by overfilling the oven below the charging hole it enters. When a portion of the oven is blocked from the aspiration system, emissions will increase. This situation does not occur with stage charging because a problem with coal flow in a hopper can be corrected before the remaining hoppers are discharged.

Coal flow problems are more likely to occur when gravity feed is used, and mechanical feeders should at least partially overcome these

problems. Typical problems with coal flow are bridging of the coal at the outlet of a gravity feed hopper or, less frequently, failure of a mechanical feeder.

4.1.3 Scrubber Systems Mounted on Larry Cars

4.1.3.1 Description. Another system used to control emissions from charging coke ovens is a scrubber which captures emissions contained by the sleeves or shrouds at the charging ports. The whole system is mounted on the larry car as shown on Figure 4-12.

Operation of this system typically consists of the following steps.

a. The scrubber pumps and the draft fan are started.

b. The larry car moves into position over the uncovered charging ports.

c. The shrouded drop sleeves are lowered over the charging ports. (In one system the shrouds do not seat directly onto the charging ports but are supported by projections on the base of each shroud. This method permits intrusion of combustion air that oxidizes emissions from the coke oven.)

d. The discharge valves on the coal hoppers are opened in a predetermined sequence which may vary from plant to plant. As pressure increases within the oven, the gases and particulates are forced out, but they are contained by the draft on the shrouds and directed to the scrubber. Some of the hydrocarbons are burned with the intrusion air at the base of the shrouds to prevent explosions in the ducts or scrubber. A detailed drawing of a shrouded drop sleeve is provided in Figure 4-13.[34]

e. When a hopper is empty, the discharge gate is closed to prevent the escape of emissions through the hopper. A small amount of coal can be retained in the hopper to provide a more effective seal.

f. As each hopper empties, the shrouds and drop sleeves are raised and the charging port lids are replaced by magnetic lid-handling equipment.

When the larry car returns to the coal storage bunkers to receive another load of coal, it may also discharge the dirty scrubber water and refill the scrubber water storage tanks. The frequency of water replacement is determined by the capacity of the storage tanks on the larry car.

The number and arrangement of the scrubbers mounted on the larry cars may vary. Early attempts to place scrubber systems on larry cars

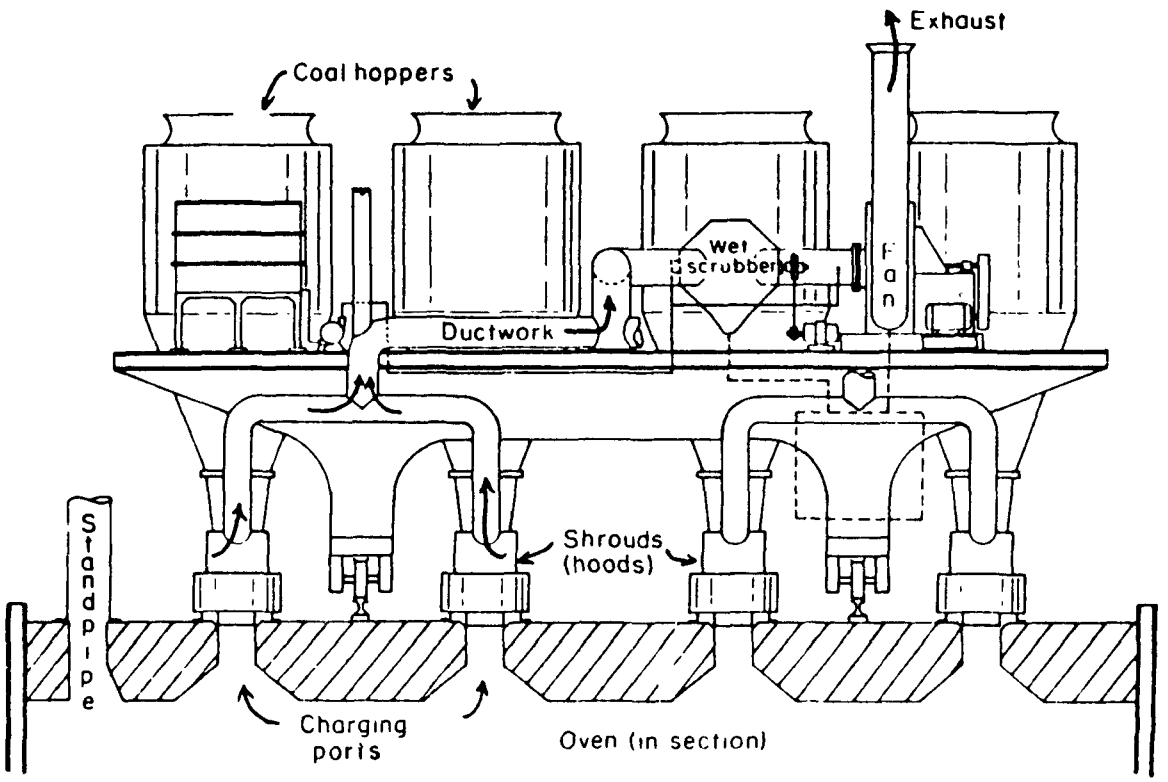

Figure 4-12. Representative scrubber system on a larry car.

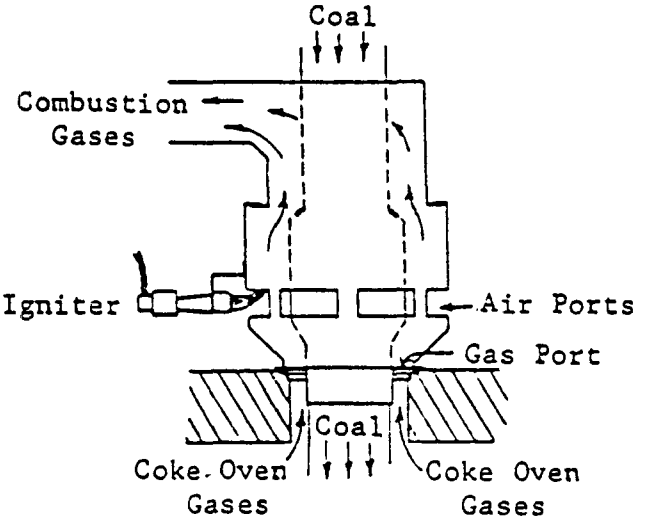

Figure 4-13. Details of a shrouded drop sleeve.[34]

were not satisfactory because under-powered scrubbers could not effectively handle the volumes of gas and particulates or ineffective igniters did not provide consistent ignition of the gases. Newer systems are designed to use high-energy venturi scrubbers and improved igniters. In some cases, electronic igniters (large spark plugs about 25 cm in length) have been used effectively. Most of these newer systems are operating in Japan and Europe.

Some significant disadvantages of early larry cars with integral scrubbing systems were reported in a Battelle study:[35]

- "They are relatively costly [and] complex ...",
- Their operating history shows "progressive severe maintenance problems and increasing breakdown rates,"
- "Intensive ignition ... [of the gases from the coke oven] ... is essential," and
- They "create a substantial problem in the disposal of polluted exhaust waters."

Further reduction of emissions is achieved by systems that discharge the gases from the scrubbers on the larry car to a second scrubber located at a fixed site.[36] These systems use a quick-connect fitting to a manifold which extends the length of the battery.

4.1.3.2. Performance of Scrubber Systems Mounted on Larry Cars. Systems that use a scrubber mounted on a larry car have two emission sources: the area around the drop sleeves where poor capture will allow emissions to escape and the effluent from the scrubber.

Although data are not available to show the extent of either the mass or visible emissions that escape at the drop sleeves, the capture can be judged relative to other systems. Observations of 12 installations in five countries indicate that "on no occasion did any observer see any scrubber car perform even one completely smokeless charge."[37] Emissions during leveling were the most noticeable. Emissions from the drop sleeves probably will be greater than those from stage charging.

When this system is used on an oven with low aspiration, emissions escape when the drop sleeves are raised to allow replacement of the charging port lids. Because there are larger openings to the atmosphere below the drop sleeves through which emissions are evacuated, the system's

effectiveness in capturing emissions will be drastically reduced.

Though no data on carcinogenic emissions are available, particulate emissions in the scrubber effluent have been measured at two plants in Germany and are presented in Table 4-7.[13] The Ruhrkold Zollverein plant in Essen, Germany, uses a low-energy Krupp scrubber with rotating screen discs in the fan housing, followed by a cyclonic mist eliminator. The type of igniter used is not known. Measurements were made on two similar cars at this plant. The Osterfield plant in Essen, Germany, uses five low-energy centrifugal dust collectors (one for each charging hole) followed by mist eliminators. Gas burners located before the scrubbers are used to ignite the gases.

Both of these scrubbers have a low-energy input. Newer installations have used venturi scrubbers with a higher energy input. Although no data on venturis were gathered for this report, it is generally accepted that lower emissions can be attained with the venturi scrubbers. This low emission level was noted during the survey of the 12 installations previously mentioned.[37]

An important aspect of scrubber performance in collecting charging emissions is the scrubber's overwhelming dependence on the ignition and combustion of gases before they enter the scrubber. Although combustion of the gases is needed to reduce the risk of an explosion in the ducts that lead to the scrubber, it also has a profound effect on the efficiency of the scrubber. Along with the gases, the fine fume and smoke that are emitted during charging are burned. If they are not burned, these types of emissions will pass through the scrubber (particularly the low-energy scrubbers) almost completely intact. The previously mentioned study of these systems concluded that performance is "completely dependent upon the degree of ignition attained and maintained."[37]

In conclusion, three primary variables that affect the performance of scrubber systems in controlling emissions from charging are:

- The type of scrubber and energy input used,
- The consistency with which ignition of the gases is maintained, and
- The amount of suction used to capture emissions in the drop sleeves.

TABLE 4-7. PARTICULATE EMISSIONS FROM SCRUBBERS MOUNTED ON LARRY CARS[13]

Scrubber performance	Ruhrkold Zollverein plant		Osterfeld plant
	Larry car number 1	Larry car number 4	
Emissions			
Grams (pounds)/charge	201 (0.44)	83 (0.18)	150 (0.33)
Grams/megagram (pounds/ton) of coal charged	7.7 (0.017)	3.2 (0.007)	3.7 (0.008)
Milligrams/standard cubic meter (grains/standard cubic foot)	738 (0.32)	585 (0.26)	167 (0.07)
Collection efficiency, percent	95	96	97
Gas flow, standard cubic meters/hour (standard cubic feet/minute)	7,200 (4,200)	3,700 (2,200)	19,400 (11,400)
Test method	N/A[a]	N/A[a]	VDI 2302 (8/74)

[a]The test method is not known but it is probably the same as that used for the Osterfeld Plant.

One observation[38] of the performance of a second scrubber in series with a scrubber on the larry car indicated that the second scrubber did not noticeably increase the efficiency of the system.

4.2 TECHNOLOGY FOR THE CONTROL OF DOOR LEAKS

Because charging takes only a few minutes, while coking continues for many hours, it might seem that door leaks are a much more serious and pervasive problem than charging emissions. However, outward leakage from any given door (two per oven in a battery of perhaps 50 ovens) may occur near the beginning of the cycle and inward leakage may occur later. Inward leakage of air affects the utility of the coke oven gas; therefore, coke oven operators were concerned about door leakage before most regulatory agencies were formed. Various systems to control leaks have been tested and improved.

Control techniques for coke oven door emissions may be separated into four basic categories:

- Oven door seal technology,
- Pressure differential devices,
- Hoods and sheds over doors, and
- Operating and maintenance procedures.

The first category relies on the principle of producing a resistance to the flow of gases out of the coke oven. This resistance may be produced by a metal-to-metal seal, a resilient soft seal, or a luted seal. Small cracks and defects in the seal permit pollutants to escape from the coke oven early in the cycle. The magnitude of the leak is determined by the size of the opening, the pressure drop between the oven and the atmosphere, and the composition of the emission.

The effectiveness of a pressure differential control device depends on the ability of the device to reduce or reverse the pressure differential across any defects in the door seal. These systems either provide a channel to permit gases evolved at the bottom of the oven to escape to the collecting main or provide external pressure on the seal through the use of steam or inert gases.

Oven door emissions also can be reduced by collection of the leaking gases and particulates and subsequent removal of these pollutants from the

air stream. A suction hood above each door with a wet electrostatic precipitator for fume removal is an example of this type of system.

Other control techniques rely on operating and maintenance procedures rather than only hardware. Operating procedures for emission reduction could include changes in the oven cycle times and temperatures, the amount and placement of each charge, and any adjustments of the end-door while the oven is on line. Maintenance procedures include routine inspection, replacement, and repair of control devices and doors.

Where data are available, the performance of the control techniques for doors is included with the descriptions. Generally, this performance is expressed in terms of visible emissions as percent leaking doors (PLD). A discussion of the test procedure for measurement of PLD is included in Appendix D. The number of doors leaking is divided by the total number of doors; the chuck door is not counted as a separate door but is considered as part of the pusherside door.

4.2.1 Traditional Oven Door Seal Technology

Oven door seals can be divided into three subsets: hard seals, soft seals, and luted seals. Hard seals contain the oven gas by pressing a metallic strip against the oven jamb. To obtain uniform pressure, the metallic strip has adjustable screws, springs, or cams. Soft seals are resilient and they permit the seal to conform to the shape of the door jambs to seal in the gas. Luting is a water-based dispersion of clay and other materials which flow to seal the door. The oven heat evaporates the water and the luting composition dries in position. A combination of hard and soft seals sometimes is used in pressure-differential devices such as the prechamber door.

Hard seals rely on the principle of self-sealing. Emissions that contain steam, volatile oils, and tars pass through small defects in the sealing surface.[39] The tars condense and seal the small openings after the steam content is reduced. The time required for self-sealing varies with oven pressures and gap size in the door. One estimate of the sealing time is 1 hr if the gaps are less than 0.02 cm (0.009 in).[40] One-hour sealing times are considered satisfactory for meeting some of the current (1979) State emission standards, because the average leak rate would be only 5.5 PLD on one battery side with an 18-hour cycle time.[41]

Metal-to-metal seals are commonly used in the production of metallurgical coke. The major types of industrial seals used in the United States are the Koppers and the Wilputte seals, which are named for their manufacturers.

4.2.1.1 Koppers Door. The Koppers door contains an S-shaped seal which is flexible and presses against the jamb. Springs reinforce and assist the sealing ring to provide uniform contact between the seal edge and jamb surface. The sealing ring is bolted to the door frame, and the spring boxes are an integral part of the door frame. Door limit stops are provided to prevent over-stressing the sealing ring. A diagram of the Koppers door is shown in Figure 4-14.[42]

The sealing strips and springs are made of 304 stainless steel which is annealed during initial use. The yield strength is reduced in the annealed state, and 304 stainless steel cannot be heat treated to increase hardness and strength. The coefficient of thermal expansion of 304 stainless steel is greater than that of the conventional door frames to which the material is bolted. At temperatures in excess of 500° C (932° F) the creep rate of 304 stainless steel is high and deformation is permanent. Eventually, these deformations will destroy the seal's ability to maintain a firm contact with the jamb.[43]

The many elements involved in maintaining the effectiveness of a metal-to-metal seal for limiting door emissions have been compared to the links in a chain, because any one missing element will cause the overall system to fail.[40] Metal-to-metal seal performance is influenced by the seal adjustment, new door installation on the oven, and door handling, which includes spotting, placement, latching, and removal. Door and jamb cleaning, door leakage troubleshooting and correction, latch lubrication, and quality control of replacement parts are important aspects in maintaining emission control. Therefore, maintenance procedures are extremely important in providing continuous good emission control with any metal-to-metal seal.

When a Koppers seal is new and installed on clean, straight jambs, it may control emissions in the range of 0 to 10 PLD;[43 44] however, this performance may deteriorate after only 6 months. Probably 40 to 50 percent of the standard doors will eventually leak.[40 45] This range represents the performance in the absence of good operating and maintenance procedures.

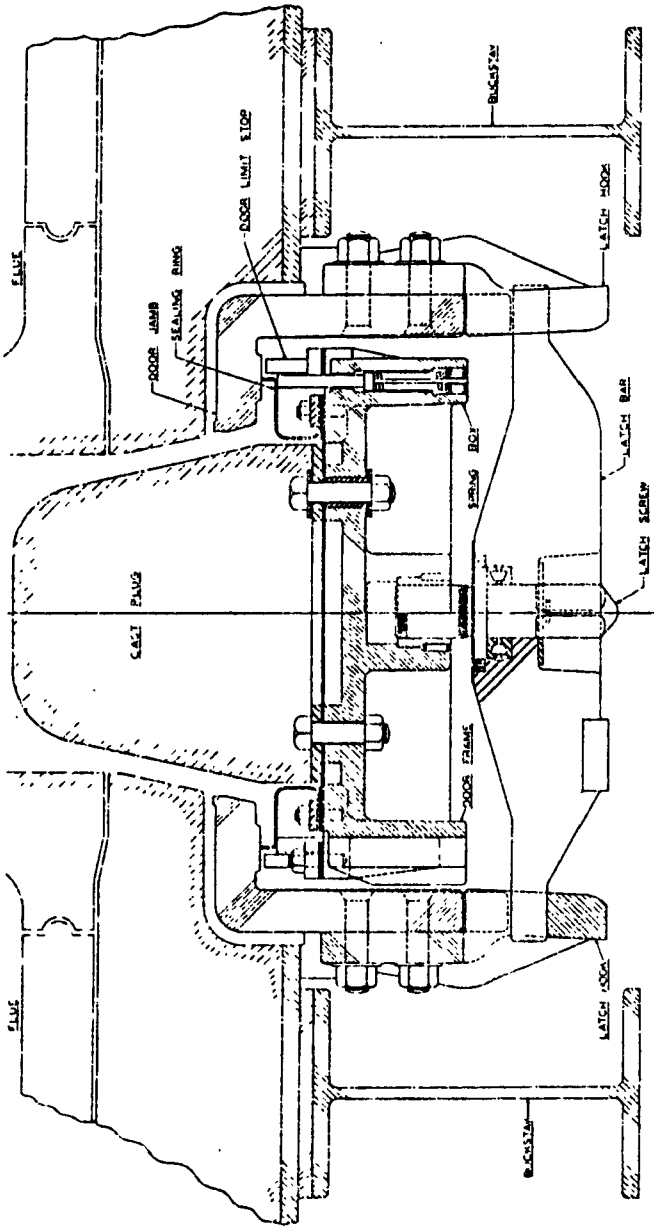

Figure 4-14. Koopers door.[42]

Copyright 1971 by United States Steel Corporation.

When the standard seal is used with good operating and maintenance practices, an average level of about 10 PLD may be obtained. Table 4-8 shows data collected at Kaiser Steel Batteries F and G which use the standard Koppers door with maintenance procedures. These data indicate a range of 0 to 20.5 PLD.

TABLE 4-8. STANDARD KOPPERS DOOR AT KAISER STEEL

Date	Battery	Average PLD	Range of PLD	Reference
5/79	F	4.2	0 - 7.8	46
	G	3.8	0 - 7.8	46
9/79	F	11.0	2.3 - 16.6	47
	G	9.2	2.4 - 20.5	47

4.2.1.2 Wilputte Door. The Wilputte coke oven door is the other major emission control technology used in the United States. Wilputte batteries are equipped with self-sealing doors with a fixed edge seal design (Figure 4-15). The seal that contacts the jamb is a knife edge which can be adjusted by screws. The knife edge is typically a 316 stainless steel strip with round edges, and it fits into the slot of the knife edge holder. The edges are installed in sections. The knife edge holder is welded to the door diaphragm or sealing plate, which is 0.6 cm (0.25 in) thick. The welds are continuous on the inside, and tack welds are used on the outside. Oval point knife edge adjusting screws for the sides of the door are supported by U-shaped clips welded onto the door frame. These adjusting screws in the top and bottom sectors of the doors are run through a square nut welded to the underside of a flange that is integral with the top and bottom door frame castings. Each adjusting screw has a lock nut. Latch springs develop the force to hold the oven door against the jamb. The typical force of the knife edge against the jamb is 150 N/cm (80 lb/in).

A recent program of maintenance and repair of Wilputte doors at one plant has reduced emissions from 45 PLD to an average of approximately 7 PLD.[45] The elements of the emissions control program included replacement of damaged components, adjustment of oven doors, cleaning, inspection, and maintenance of oven doors, adequate spare doors, good operational practices,

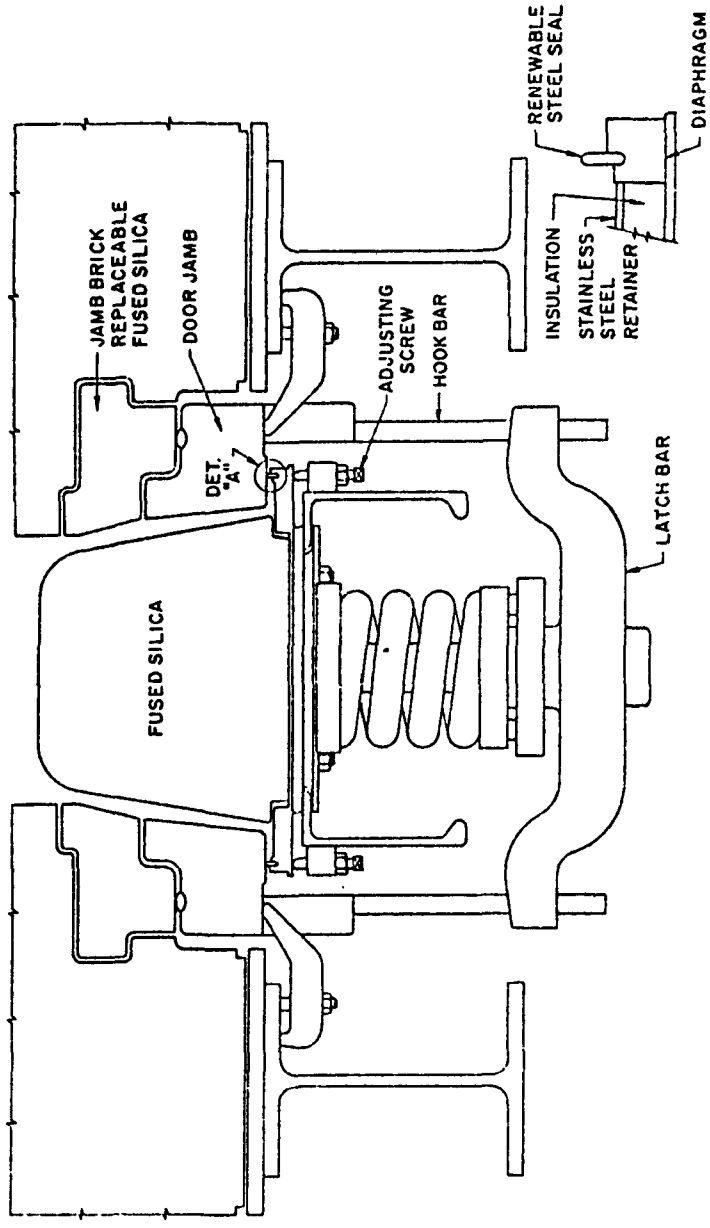

Figure 4-15. Wilputte door.[42]

Copyright 1971 by United States Steel Corporation.

and monitoring. Also, the door design was improved by adding extra adjusting screws. Without the maintenance program, the door's performance is similar to that of the Koppers door. An EPA inspection of Battery P3N at J&L, Pittsburgh showed a range of 21 to 38 PLD and an average of 27 PLD from nine observations.[22]

4.2.1.3 Wolff Self-Sealing Door. The Wolff cast iron, self-sealing door contains a simple strip which is forced flush against a jamb with a cammed lock plate (Figure 4-16). The Wolff door was introduced in 1950 and is predominantly used in Europe. More than 85,000 Wolff doors and jambs are in operation in the world. Initially, the door contained screw-type latches; however, later modifications included a pneumatically operated steel bellows for spring-type latches. A later modification of this door includes a gravity latch whereby the weight of the door is transferred to the sealing edge and becomes the sealing force, replacing the screw and the pneumatic bellows as the latching mechanism.[42]

Sealing of the Wolff door is achieved by a steel straight-edge held in position against the jamb by a cam. The sealing edge is adjusted by hammering lightly on its back edge to contour it to the oven jamb. The sealing strip cuts through the tar deposit on the jamb to form a seal.

The door is equipped with mushroom cap guides on both sides for ease in replacing the door on the jamb;[42] this placement reduces the damage to the sealing edge. The sealing edges are also equipped with backup bolts to further force the sealing edge to conform to the jamb over the short span of the oven width at the top and bottom of the door.

The Wolff seal is a simple, sturdy design that is easy to clean.[48] Advancement of the sealing strip compensates for thermal deflection of the door. Cammed lock plates keep the sealing strip in position and secure it against displacement. The sealing strip is pressed against the oven jamb with a latching force of 100 N/cm.

4.2.1.4 Hand-Luting. Luting, which is one of the oldest coke oven control technologies, is used commercially on many foundry batteries and on a few metallurgical coking batteries. Hand-luted doors are sealed by trowelling a luting mixture into a V-shaped opening between the metal door frame and a roll formed steel shape (door jamb) on the end of the oven. The luting is a mixture of clay, coke breeze, and water, which dries and

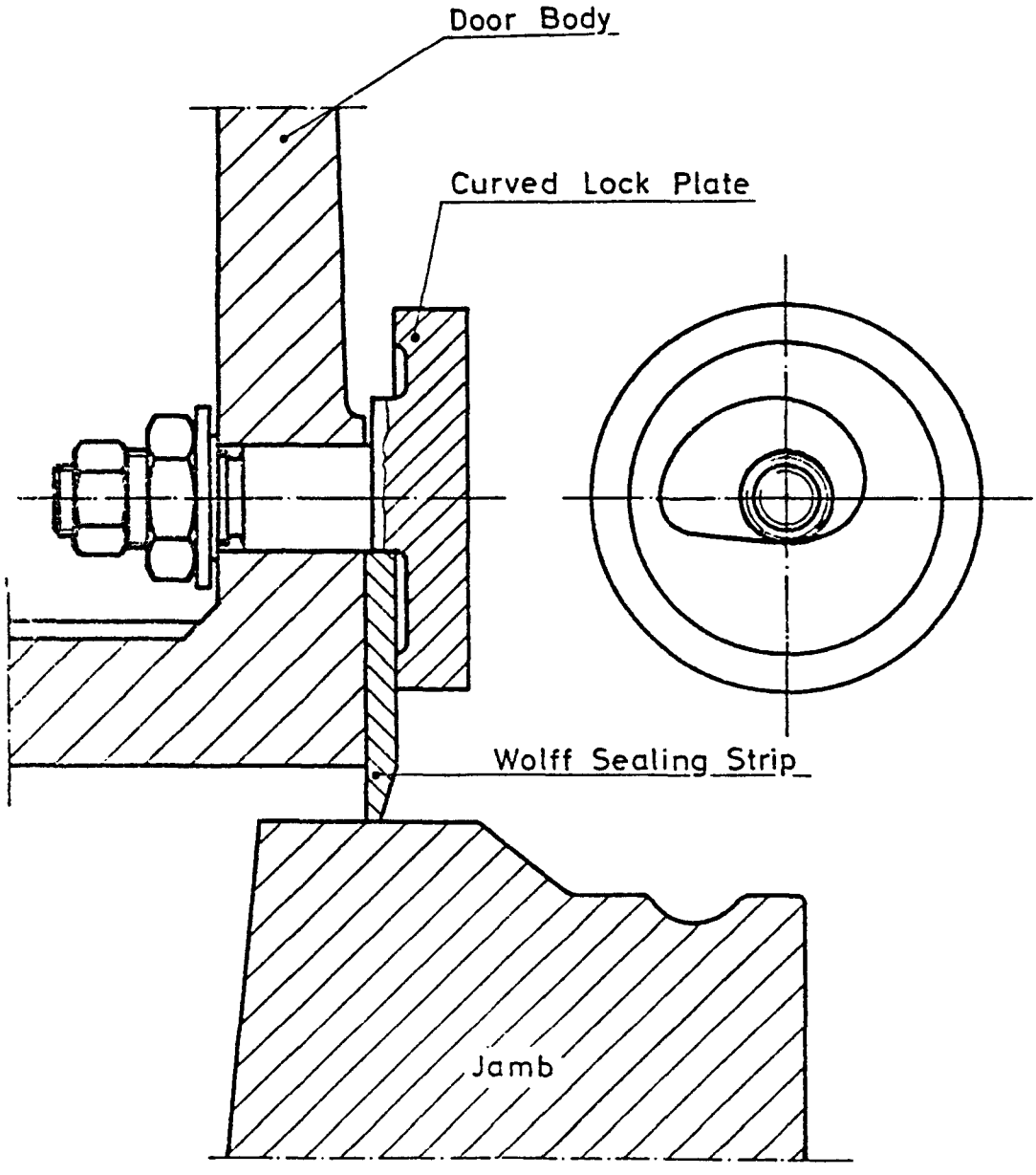

Figure 4-16. Wolff self-sealing door design.[48]

seals the gap between the door jamb and the door. The carbonaceous material is added to reduce shrinkage and cracking upon curing.

Some advantages of luting are that there are no leaks when it is properly applied, and luted doors are less costly to maintain than self-sealing doors. However, the luting mixture is applied manually and workers may be exposed to fumes during the 5 minutes required to lute a door. Another concern is that the luting can crack because of the mild combustion explosion from the coal first entering the oven. Reluting may be required after charging to avoid uncontrolled fires if cracks develop or the luting is jarred loose. The removal and disposal of luting material does not represent a major problem because it can be recycled.

Luting is particularly interesting because it represents an emission control technology that has the potential for eliminating almost all door leaks. However, the lack of fully developed luting formulations and the absence of proven luted door technology for high production rate metallurgical coking have limited widespread adoption. Although luting has been used for foundry coking with 30-hour cycle times, the faster cycle time for metallurgical coking (18 hr) would require additional manpower, new equipment, and solutions to material handling problems.

Emission data for batteries with hand-luted doors show a wide range of emission control. Three plants averaged 2, 5, and 13 PLD with ranges of 0 to 10, 0 to 17, and 5 to 19 PLD, respectively.[49 50] A conscientious program of reluting doors as necessary would be required to maintain this low level.

4.2.2 Modern Metal-to-Metal Seals

Currently available major emission control techniques are based on metal-to-metal seals. Self-sealing doors with metal-to-metal seals invariably have a small clearance between the sealing surface and the jamb, and tar in the escaping gas ultimately plugs these small gaps. The time needed to plug the gap depends on the size of the gap, the temperature of the seal, the pressure in the oven, and other factors. Leaks cannot be prevented solely by metal-to-metal contact without plastic (irreversible) deformation of the metal. A Battelle investigation[39] of the self-sealing mechanism found that even small gaps were not sealed during the first 30 minutes after the coal was charged. Most of the early flow from the coke ovens was steam-containing volatile oils and tar. The condensation of tars sealed the small openings only after the steam content was reduced.

A few coke oven doors have been observed to be completely free of visible emissions during the entire process.[39] One hundred percent control of visible emissions can be obtained with Koppers doors when new seals, well-adjusted doors, and relatively straight and clean jambs are used.[43] However, the performance often begins to deteriorate in less than 6 months.

Effective sealing is inhibited by several factors, including distortion and damage to jambs, doors, sealing strips, and adjusting hardware.[39] Most of the components of the oven's end-door assembly are tightly constrained; consequently, when the assembly is heated, stresses result because gross distortions are prevented. Thermal cycling under these constrained conditions causes thermal warping of the metal components. Occasional temperature excursions and fires from leaking doors also cause warping, because plastic deformation occurs at temperatures of 500° C or higher. Although no metal-to-metal contact without plastic deformation will prevent leaks, this very deformation can lead to long-term problems in maintaining close tolerances on sealing surfaces.[51]

One of the major causes of poor sealing is the accumulation of irreversible deformations of the jamb.[51] The constrained jamb is heated by conduction through the bricks between the jamb and the end flue.[52] The permanent deformations that result appear both in the plane of the jamb (hourglassing) and normal to the plane (bowing). An investigation of jamb distortion found significant warping on all jambs measured, and warping probably has occurred in various degrees on most of the 25,000 or more cast jambs in service.[39] One technique to minimize jamb deformations is to allow the jamb to bow inward to relieve the stress and then to bolt the jamb to the backplate-buckstay arrangement.[53] When this technique was used, the jambs were straight, but fires subsequently warped the jambs.

Stress relaxation of the metal seals also causes gaps between the seal and the jamb. These gaps form when the seal permanently distorts to relieve stress forces or when the sealing edge deflects backward because of thermal buckling (usually above the upper latch). The flatness of the sealing edge also changes because of stress relaxation and distortion.[53] In this work, some periodic up and down effect was noted with 0.094 cm (0.037 in) and 0.064 cm (0.025 in) relative gaps. The problem of maintaining a uniform seal contact is compounded by changes in the contact pressure on the seal.

Uneven stress distributions may be caused by the forces from adjusting screws and spring plunger assemblies or from a variation in the forces of the adjusting and latching springs as the temperature distribution changes. These factors tend to increase the gap size which increases both the time required to seal the gap and the amount of gas escaping through the gap. Although flexible seals are more capable of conforming to irregular jamb contours than fixed seals, both types are subject to distortion. Door leaks that are caused by this seal distortion may be minimized by repairing or replacing the seal when the gap size exceeds a specified limit. Some plant operators say the gap between the seal and jamb must be less than 0.02 cm,[40] while others require a gap size that is less than 0.005 cm[41] or 0.008 cm.[51]

Although the distortion and damage of the jamb and sealing strip is of primary importance, the structural behavior and interaction of all elements involved in sealing accounts for the sealing performance of the system as a whole.[51] When carbon and tar build up on the sealing surfaces, plastic deformation of the components will not provide an acceptable seal. Hardened deposits of tar can change the sealing surface so that the gaps depend on the exact placement of the door. If the jamb is not uniform, different placements can impose different stress patterns on the door seals. To avoid irreversible distortion, the seal must not be stressed beyond the elastic limit. Once contact is made at the latch levels of the door, it is useless to increase the latch force, and the adjustable feature of the door seal must be used.

The possibility of permanent distortion increases with the rigidity of the end-closure components. Any reduction in rigidity would promote positive results. Any decrease of temperatures, thermal gradients, and material buildup behind the jamb will result in improved dimensional stability of the end-closure system.[51]

4.2.2.1 Modified Koppers Door. The major innovations used to upgrade the standard Koppers door technology are a stronger, more temperature-resistant seal, a more temperature-resistant plunger spring, and stop guide blocks.[40 44] This technology can be applied to Wilputte doors as well as to Koppers doors.

U.S. Steel has implemented the following modifications on their Koppers doors. The old seals were replaced with new seals of a special alloy (NiCuTi) which is more resistant to permanent distortion at elevated temperatures. The stop blocks prevent distortion of the seal beyond the elastic limit.

Springs in the Koppers doors were replaced with more temperature-resistant springs. This new material is less subject to stress relaxation and greatly extends the useful lifetime of the sealing assembly. U.S. Steel added a corner spring assembly which reduced leaks from the square corners.

Four stops were added to each door. The stop guides are located behind the knife edge to prevent excessive stress on the sealing edge. The guides also assist in the positioning of the door. Operator training in combination with the use of the stops is important. Plug spotting is used to center the door; then the guides are used. The latch legs nick the sealing edge if the door is improperly positioned. Nicks can now be easily repaired, because the stops prevent excessive damage. Different positioning of the stop blocks is required for different types of door machines. Some door machines arc the door into place while other machines push the door straight in. Three out of four stops must be flush with each jamb or the door is not considered to be properly in place.

Old cast-iron jambs were replaced with new nodular cast-iron jambs. A special bolt added to the buckstays permits adjustment to a more favorable jamb bow. Latches were equipped with low friction bearings so that reproducible pressures can be applied to the seals.

Although regular Koppers doors can seal initially, U.S. Steel believes this ability is lost over time. U.S. Steel's modifications of the door seals produce a more uniform sealing, and the seal has a longer service life expectancy.

Specifications have been set for the manufacture of the door parts and these have improved the part quality and emission control. Design specifications, assembly guidelines, installation and adjustment procedures, maintenance procedures, and troubleshooting techniques are significant parts of the overall door-sealing system. Door leaks are monitored over

several cycles, because small carbon fragments can interfere with sealing. Maintenance on improperly sealing doors consists of a sequence of three procedures. After proper identification procedures, a problem door is systematically examined, adjusted, and repaired as needed. If the door does not properly seal after several cycles, changing the adjustment usually increases the problem. The identification of problem doors (repeaters) is an important aspect of the overall technology, and doors are replaced when they leak repeatedly.

Repair of the door involves replacing the plug, testing the springs, repairing nicks on the seal, or replacing the seal. An important aspect of the maintenance procedure is testing the door sealing assembly and comparing the measurements with specifications that have been developed for door sealing. The door leak problem has been reduced by adherence to these specifications. Maintenance especially emphasizes seals, nicks, and alignment. If the seal is out of specification after repair, it is replaced.

Motivation of the oven workers is essential to a successful emissions control program. Achieving this motivation involves a substantial amount of management skills.

The previously mentioned oven door technology has been in use since January 1978. As currently practiced, this technology is not expected to reduce the emissions to significantly less than 5 PLD. This apparent limitation is consistent with the concept of self-sealing by tar generation during the initial stages of the coking cycle. (Doors seal after 5 percent of the coking cycle.) Data from an EPA inspection in August 1979 (provided in Table 4-9) show a range of 1 to 5 PLD for six of the Clairton batteries with modified doors.[20]

CF&I uses similar technology on the Koppers doors at their Pueblo, Colorado, coke batteries.[19] All the doors were equipped with new NiCuTi seals which can be easily repaired or welded. The oven door springs were changed from chrome vanadium steel 6150 to chrome silicon steel SAE 9254. This change improved static loading properties and increased creep resistance. Rebuilding techniques for doors were refined to include "blueprinting"--repairing the seal components to design specifications. Operation and work practice techniques were improved to provide more thorough inspection,

TABLE 4-9. PERCENT LEAKING DOORS FOR BATTERIES AT U.S. STEEL, CLAIRTON[20]

Battery	Observations[a]	Percent leaking doors	
		Average	Range
1	7	0.9	0 - 2.3
2	7	2.3	0 - 5.5
19	5	4.0	3.5 - 4.8
20	9	4.7	2.3 - 8.7
21	5	3.2	1.8 - 5.9
22	6	3.4	2.3 - 5.4

[a]Collected over a period of 4 to 7 days in August 1979.

cleaning, placement, adjustment, and repair of doors. This program at CF&I has reduced door leaks from the 15 to 20 PLD level in 1976 to an average of about 5 PLD in 1978 and 1979.[19]

4.2.2.2 Modified Wilputte Seals.[54 55] Jones and Laughlin Steel (J&L) believes that accurate door seals provide the most effective control of emissions. At their Pittsburgh Works, Wilputte doors have been converted to a Koppers type flexible seal (Figure 4-17). The two major areas of seal modification are the materials of construction of the sealing edge and the use of temperature-resistant materials in the springs.

Conventional sealing edges are distorted during high temperature use; however, the new NiCuTi seals are temperature resistant and can be removed while the plug is on the door (not possible with the old design). Guiding the door to replace the seal in a reproducible fashion is also required for consistent sealing. Guides were added to position the door top-to-bottom and side-to-side for repeated seal positioning. The springs were changed to a special design for high-temperature service and location of the springs was carefully chosen to improve sealing.

Proper maintenance practices are essential for this control technology, and operator attention is a critical factor. Under J&L's maintenance practice, the jamb deflection is measured and jambs are replaced as necessary to meet the existing standards. The limits of bowing and hourglassing are 1.9 cm (0.75 in) and 1.3 cm (0.5 in), respectively.

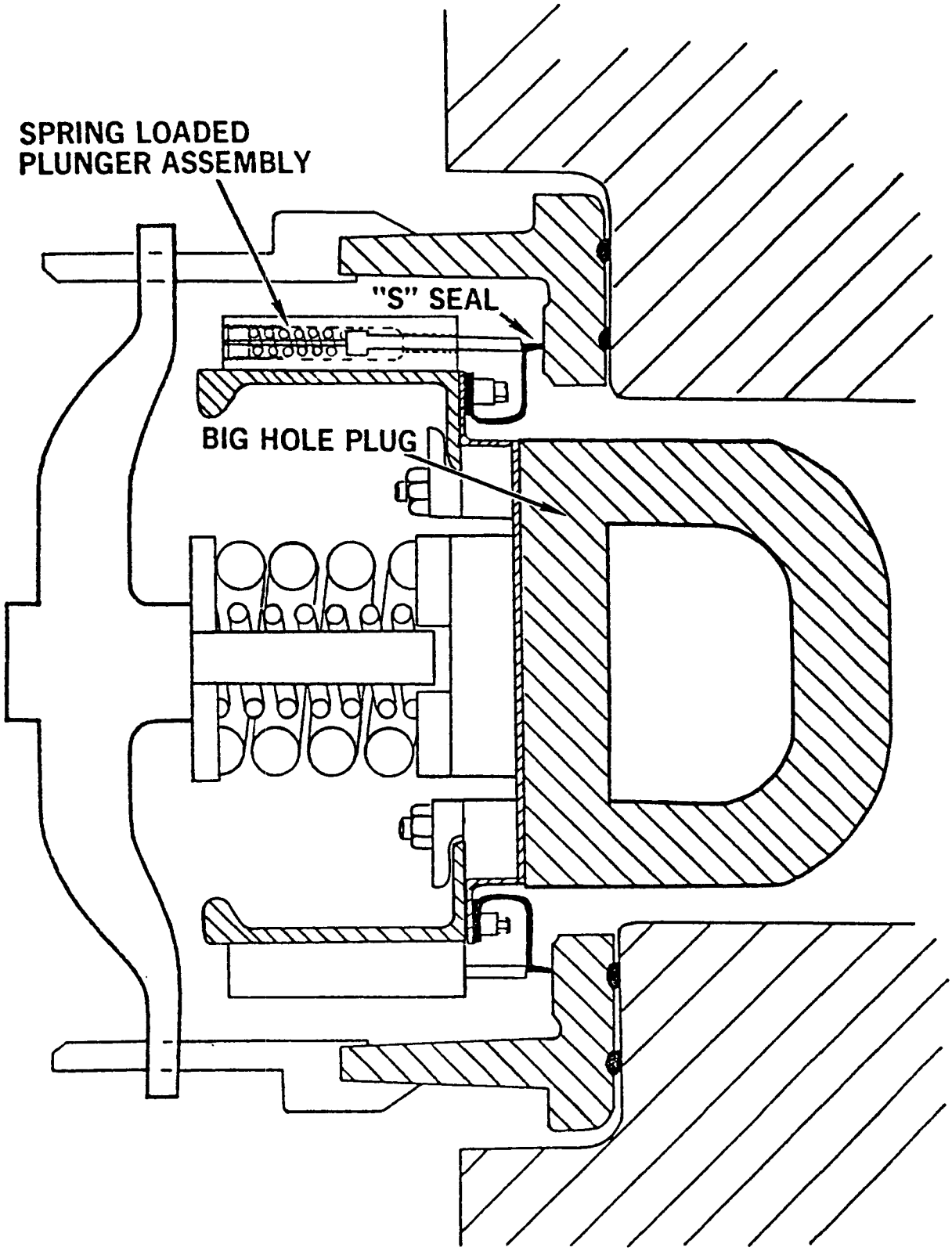

Figure 4-17. Cross-section of modified Wilputte door.[54]

Maintenance is more stringent for rehabilitated seals. According to leakage history, seals have been changed from one to twelve times a year. To change the seals, the leaking door is taken out of service, sandblasted, and tested for warping. The seals are replaced and the springs checked for compression. The rehabilitated door is then placed on the oven and adjusted. The clearance is specified as 0.008 cm (0.003 in) around the door. The performance of the door is checked over several cycles. Adjustments are not performed on doors in service because extensive efforts to adjust leaking doors have been unsuccessful. A door must be removed from service when it will not seal.

The conversion from a standard Wilputte seal to a flexible seal is expensive. J&L's estimate of labor and materials required is $8,000 for a pusherside door and $7,000 for a cokeside door. Rebuilding the doors from the conventional to the new design may require three times as long as rebuilding with a conventional Wilputte design, but after implementing the new design, the seal change is faster on the modified doors because the plugs do not need to be removed.[55]

Changing Wilputte doors to the modified design has reduced leaks from between 40 and 60 percent to 10 percent.[55] This rate is less than that of rehabilitated Wilputte batteries which were only able to achieve a 25 percent leakage rate using conventional technology. In August 1979, an EPA inspection of J&L's P2 battery in Pittsburgh showed even better short-term results. A range of 2.5 to 3.4 PLD was observed with an average of 3.2 PLD.[22]

4.2.2.3 Ikio Seals.[56] The Ikio oven door is similar to a modification of the Wilputte oven door. However, rather than the knife edge holder being welded to the door diaphragm or sealing plate as in the Wilputte door, the Ikio oven door has a flexible sealing plate which is welded directly onto the knife edges (Figure 4-18). The sealing plate is 304 stainless steel, 1.5 cm (0.06 in) thick, and is positioned between the main body and the brick side of the oven door. The sealing strip is a flat ductile steel bar, 8.0 mm (0.315 in) thick, welded to the sides of the sealing plate. Whereas the Wilputte door has adjustable screws which maintain the relative position of the sealing edge, the Ikio door has

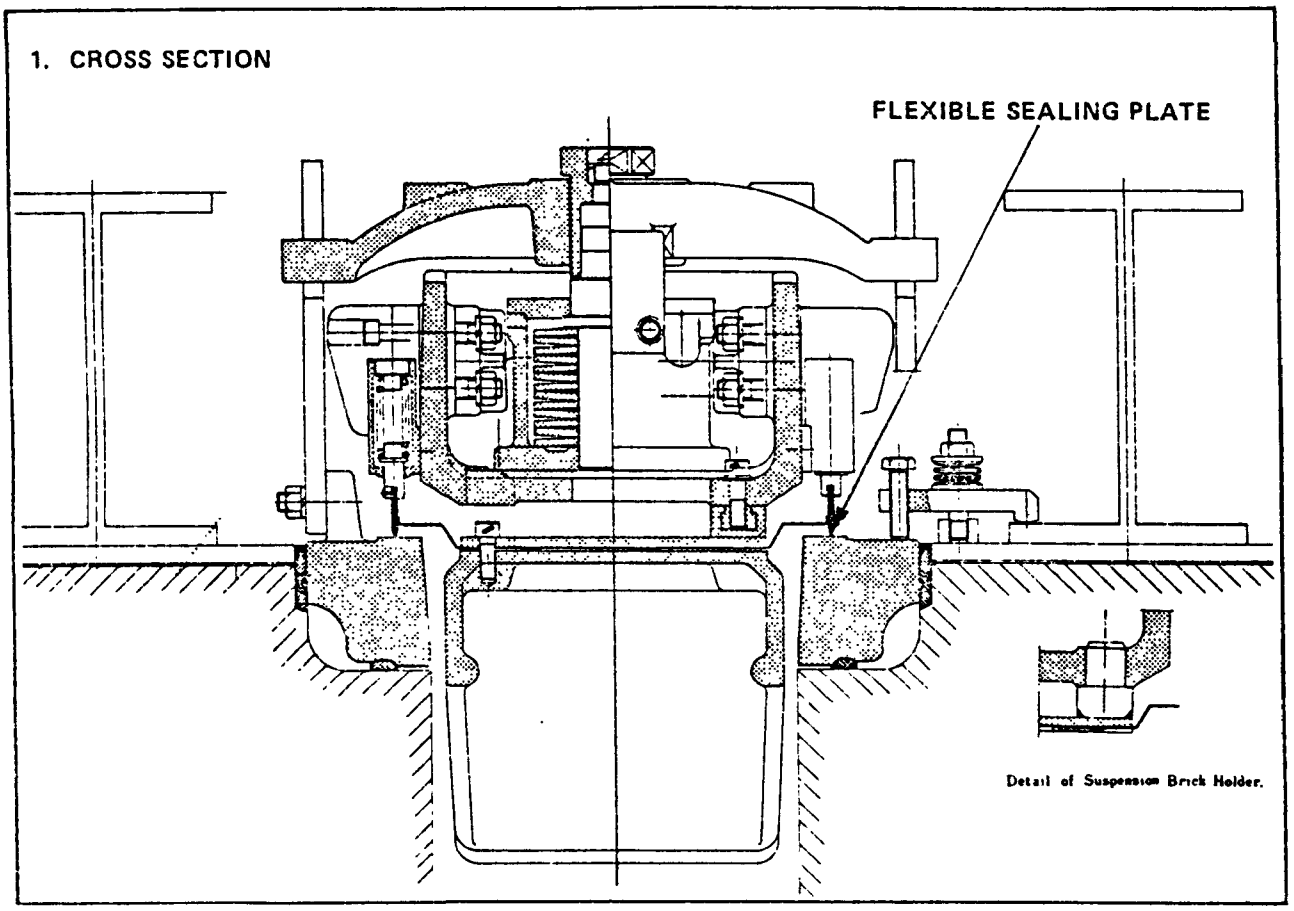

Figure 4-18. Ikio door.[56]

springs which can be moved 10 mm (0.4 in) forward and 15 mm (0.6 in) backward and are positioned 300 mm (12 in) apart along the sides of the oven door. These springs provide uniform pressure for the sealing plate and knife edge against the oven frame. This unique construction is claimed to seal in the gas completely.

The spacing of 40 mm (1.6 in) between the main body and the brick side of the oven door reduces heat transmission from the oven. The reduction in temperature differential minimizes the stress on the oven door and warping is reduced. Measurements obtained on a 6.8-meter (22-foot) oven door indicate that the oven door plate operates at substantially lower temperatures than conventional oven doors and that there is also a lower temperature difference between the door plate and door frame.

The reduction in strains of the oven door is claimed to reduce the amount of travel required for the knife edge to conform to the jamb contour, and this reduces the adjustments necessary in the springs. Constant attention is not required; therefore, labor costs are reduced. The insulation of the oven by the new door seal reduces the overall heat radiation from the ovens and provides improvement in working conditions and productivity, according to the manufacturer's claims.[56]

Conventional doors can be replaced with the Ikio oven door. The manufacturer prefers to sell a new door and seal with a new jamb, which is expected to provide better emission control. The Ikio enclosures are reported to be performing well at some plant operations.[57 58]

An inspection was conducted by EPA to observe Ikio doors in operation on the tall ovens of Battery 5 at National Steel's Zug Island coke plant. The 6-meter doors were leaking at a rate of 38 to 55 PLD.[47] Plant personnel indicated that the seals were not adjusted on a regular basis. Other plant personnel felt that there was an unresolved design problem related to domestic coal mixes.[59] Based on this plant visit, it could not be concluded that Ikio doors represented an exemplary control device.

4.2.2.4 Battelle Seal (EPA-AISI). The Battelle Columbus Laboratories, in association with AISI and the U.S. EPA, has developed a retrofittable seal.[60 61] The material of construction is a heat-treated, high-nickel alloy--Inconel® X-750, and the seal is a continuous spring which is reinforced if necessary by continuous springs (Figure 4-19). The retrofitted

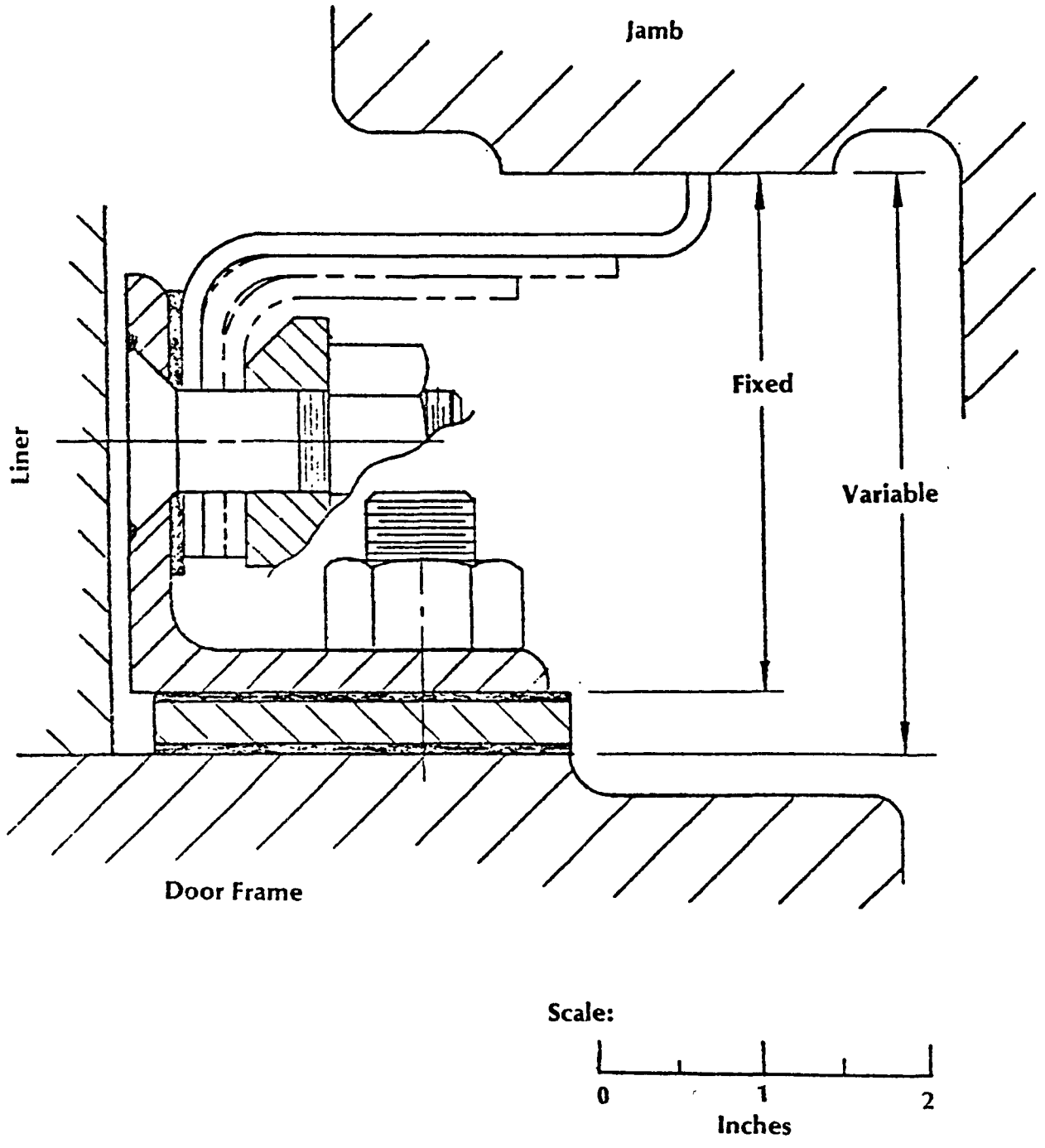

Figure 4-19. Battelle seal design.[61]

seal and spacers will be installed to align the bow of the door with the bow of the jamb. The seal is retrofittable both to Wilputte and Koppers enclosure systems. This seal is less dependent on point loading than are seals with individual spring units. The Battelle concept is to provide a seal which is highly flexible in the direction perpendicular to the face of the jamb. The design stress levels are below the allowable stress for the high-temperature material. If these objectives are achieved, the seal will conform to a badly distorted jamb without taking a permanent set at the normal operating temperatures. This project has now entered the demonstration phase, and no conclusive results have been reported.

4.2.2.5 Gas Seal, Nippon Steel Company. The gas seal has been commercially used for 2 to 3 years at Nagoya, Tobata, and Kamaishi Works of Nippon Steel. In the case of Kamaishi Works, the seal was retrofitted to existing batteries. The gas-sealed door technology as practiced at the Kamiashi Works includes use of a luting mixture on the exterior sealing surface edge and use of gas pressure to prevent leakage.[62] The self-sealing doors used on the observed batteries at Kamaishi are Otto doors with Wolff "knock-type" seals. The Japanese claim that the details of the seal design, gas type, and gas distribution system are business confidential; therefore, this information is not presented in this report. The gas used is nontoxic, nonexplosive, noncombustible, and generally available to all coke plants.

In practice, the gas supply to each individual door is turned on after the push is complete and the door has been reinstalled. Gas is injected in the oven chamber at 200 kPa (30 psi).[62] While the oven is charging, workers rap the knock-type seal to force the sealing edge into residual tar deposits and effect a partial seal. As points of leakage are identified, a luting mixture composed of mortar and coke breeze is spread along the exterior edge of the seal. The amount of luting mixture applied is very small in comparison to the amount used in hand-luted door practice. The worker can hold the supply of luting mixture in a pan that fits the palm of the hand. Reluting is practiced as necessary to prevent obvious leaks. Gas usage on any particular door need be continued only for a portion of the coking cycle.

Performance observations during a 3-day period revealed that the gas seal technology produced leakage rates in the range of 0 to 10 PLD with collecting main pressures of about 6 mm of water. These performance levels are about equivalent to the best technology currently in use in the United States but they are not clearly better than this technology.

To retrofit this technology, doors and jambs must be in good condition. The vendor claims that if several spare doors are available, there is no need to curtail production during the retrofit period. The maintenance program was claimed to involve rigorous cleaning of the doors and jambs; however, such cleaning was not observed during the plant visit. The estimated capital cost to install the technology is about $1,000 per door.[62]

4.2.2.6 Prechamber Doors. The Wolff steam prechamber door uses a double seal with steam introduced between the two seals to control door leaks (Figure 4-20).[48] The inner seal (System 1) is accomplished by metal-to-metal contact, and the outer pliable seal (System 2) is silicone rubber. The metal seal is made of ordinary carbon steel with a tensile strength of 500 to 600 N/mm^2 and a width of 8 mm for 6- and 7-meter doors and 6 mm for 4- and 5-meter doors. Every fifth screw around the periphery of the door provides a pressure adjustment for the inner seal. The prechamber has a volume of 830 liters on a 7.1-meter door. Steam is injected into the prechamber and is regulated by a 2-millimeter orifice.[63] Emissions from the oven are reduced because of the steam pressure; the outer seal prevents the escape of any leaks through the inner seal.

With respect to retrofit, original door frames can be reused, but the other door components must be replaced. Conventional door machines can handle the door installation and removal. One problem area is the 9- to 10-month life of the silicone rubber seal; a new material with an improved life would make this technology more attractive.[63]

Five doors at a German coke battery were fitted with the steam prechamber. These doors were in operation for 2 years with no problems other than replacement of the soft seal. Complete control (i.e., no leaks) was reported for the five test doors.[58] However, these doors have been removed from service and replaced with conventional doors. These doors are no longer used because of the experience of soft seal replacement and the absence of regulatory pressure to reduce emissions further.[63]

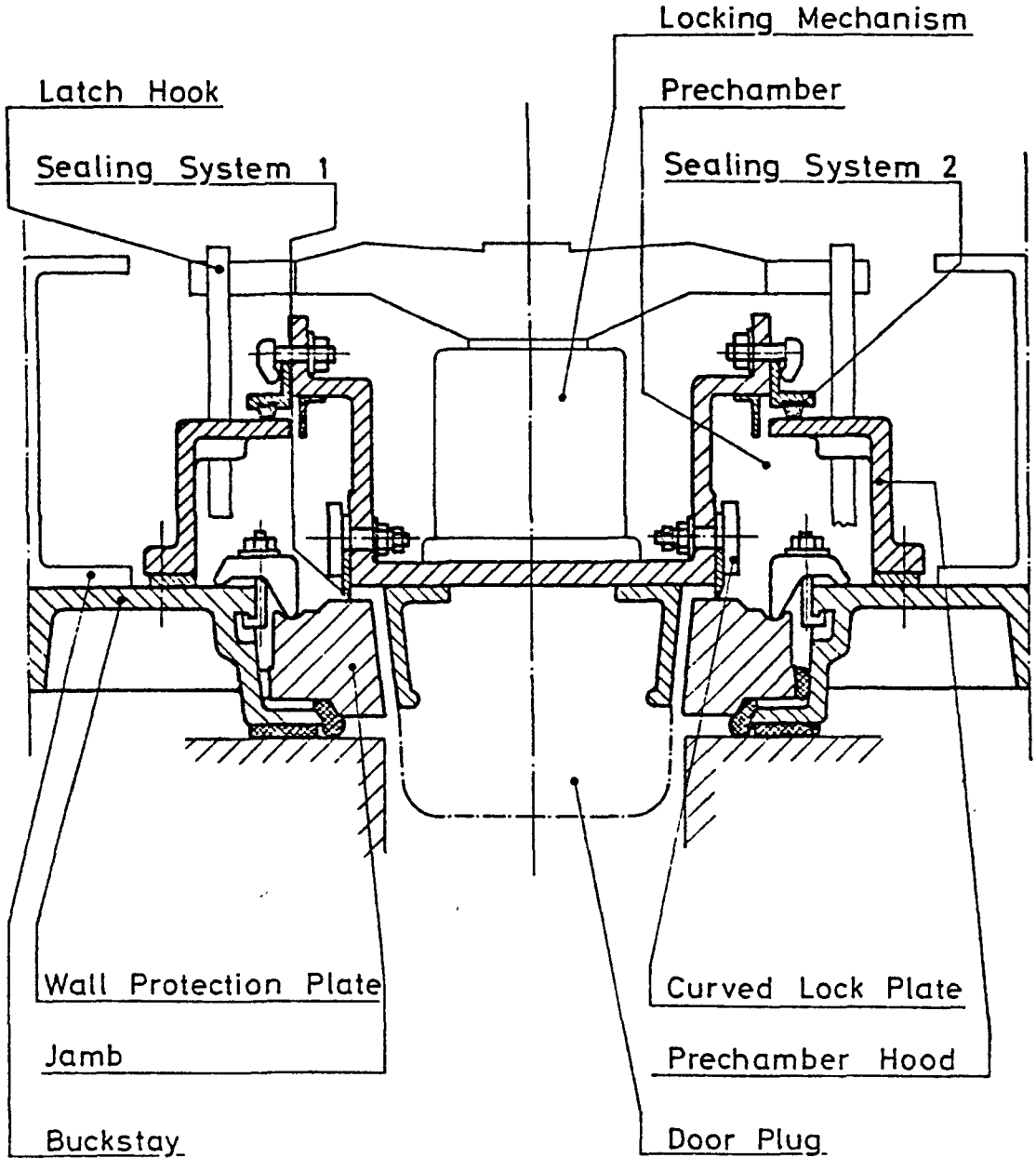

Figure 4-20. Wolff prechamber door.[64]

An advantage of this control technology is the reduction in tar deposits because of the steam pressure.[64] Moreover, air is prevented from entering the oven, and this eliminates soot formed by combustion in the oven. A longer life is expected for the door seal and the oven.

One disadvantage is that space is needed within the buckstay for the chamber structure. Retrofitting existing ovens requires space which older batteries may not provide. One possible disadvantage is that steam can react with carbon at elevated temperatures and produce extra coke oven gas at the expense of coke yield. The door cost is 40 to 50 percent higher than a standard coke oven door.

Another modification of the gas chamber is the metal-to-metal seal which contains a gas chamber for coke oven gas at above atmospheric pressure. The current development status is a patent which has been granted.[65] One of the claims of the patent is that double protection is provided against leakage of gas to the atmosphere. The purge gas system is claimed to collect particulate matter from the chamber.

4.2.3 Other Control Techniques

Techniques that are discussed in this section do not fall into the previously discussed category of metal-to-metal seals. Emphasis is given here on work practice controls, fume collection, design modifications, and promising technology that is in the patent or trial stage.

4.2.3.1 Maintenance and Operating Procedures. The avoidance of leakage greatly depends on good operating practices and maintenance. One factor in emissions control is provision of the best possible work environment for the operators. In one reference, good maintenance and operating practices were advocated: "In some ways it is the easiest method, probably the least expensive, the most effective, and justifiably on many occasions 'the best practical means' of controlling the pollution."[66]

Good operation requires the removal of deposits from the sealing edge and the jamb. Cleaning is perhaps the most burdensome task of the coking process, and workers tend to overlook the hard-to-reach sections on high oven doors. The task of manual cleaning is more difficult on the taller ovens than on the short ovens, and there is a greater tendency to not clean the oven thoroughly.[67]

For a long time, coke plant operators have recognized that large, unchecked leaks may cause fires and damage the seal and buckstays beyond repair. The cleaning of the metal surfaces which come into contact should emphasize the removal of encrustations and particulate deposits which can cause gaps that allow leaks.

Cleaning the doors and jambs to the bare metal does not always provide additional benefits. It has been reported that excessive leakage always resulted when the operators scraped the jambs to bare metal.[43] With Wilputte doors, it is impractical and undesirable to clean the sealing surfaces to bare metal; a thin film of tar should remain after cleaning to aid in sealing gaps between the knife edge and jamb.[45]

The seal on metal-to-metal coke oven doors should be maintained so that they meet a maximum gap specification. Seal distortions should be corrected by filing or the seal should be replaced to meet specifications. Typical gap specifications are 0.005 to 0.008 cm (0.002 to 0.003 in). The use of temperature-resistant materials and seals designed to provide uniform sealing pressures can reduce much of the maintenance effort necessary to meet the specifications.

Door-machine operation should emphasize smoothness and continuity of movement to minimize stress on the sealing structure, and the door machine should be carefully maintained. Variables such as the force applied to the latch and the lubrication pressure are important in obtaining uniform door placement. In the U.S. Steel paper by Stanley,[41] an investigation of latch forces yielded values that ranged between 30,000 and 170,000 N (6,800 to 39,000 lb) per latch. Screw torques also varied between 270 and 1,150 newton-meters (200 to 850 foot-pounds). U.S. Steel found it necessary to establish a practice for providing uniform latch forces, as follows:

- Standardize drive motors and torque converters,
- Pretest the torque motors in the shop to obtain the proper torque, and
- Set the amperage in the field at the desired level.

4.2.3.2 Effects of Process Variables. The oven pressure is a process variable which can be used to moderate emissions because flow through small leaks is proportional to the pressure differential. A disadvantage of using low overhead pressure as a control technique is that low oven pressures

have been reported to cause severe damage to the oven wall brickwork.[61] Also, oxygen that is introduced into the oven at the later stages of the coking cycle by the low pressures causes soot formation that can block the ascension pipes and lower the quality of the coke oven gas.

Temperature effects of the process variables damage the door components and increase emissions. The major drawback to lowering the coke temperature to minimize thermal damage is the resulting increase in cycle time and decrease in coking capacity. Decreasing the coke temperature from 1,000° C to 800° C could conceivably reduce capacity by one half. The temperature change could also alter the composition of the by-product gas.

4.2.3.3 Soft Seals for Control of Chuck Door Emissions. The performances of three major types of soft seals have been reported. These three types are graphite impregnated with carbon,[54] asbestos impregnated with graphite,[54] and the Escolator chuck door gasket. Generally the soft seals do not provide long service life because oxidation or compliance loss causes them to fail. Any tar that builds up on the seals is subject to hardening. New asbestos-gasket material was reported to be in use for 3½ weeks with no leaks.[68] The gasket was adjusted in place to eliminate leaks.

The Escolator chuck door gasket is composed of a compressible and deformable sealing member between outer layers of steel foil. The major disadvantage of this chuck door gasket is that it does not continue to work effectively.[55 69] One of the principal reasons for the short life of the Escolator chuck door gasket is that the load which is transmitted through the sealing edge to the sealing member is limited to the width of the sealing edge, about 3 mm (0.125 in). A new modification of this chuck door gasket is provided by using a perforated steel strip as one layer of the sealing member.[70] The life of the modified gasket is estimated at twice that of the unmodified gasket. Another disadvantage of the Escolator chuck door gasket was that it was fragile and difficult to handle and install. The modified seal is claimed to be easier to use.

Graphite-impregnated asbestos chuck door seals have been reported effective for 2 month's use on batteries with about 40 chuck doors. No emission problem was reported on these chuck doors.[55]

4.2.3.4 Hoods for Oven Door Fume Collection. A technology that is in the patent stage concerns a separate emission collection hood positioned above each coke oven door. Fans remove the emissions from the doors through manifolds. When the door is on the oven, the valve is slightly open, but during the push, the valve is fully open to remove pushing emissions (Figure 4-21).[71]

This technology is claimed to reduce emissions when the doors are either in place or removed. The emissions can be vented to a recovery process. The collection hood also may provide for sealing between a coke oven jamb and a coke guide during pushing. A variation of this system is used with the Ministerstein pushing emission control system at the DOFASCO Plant in Hamilton, Ontario. Another variation is used on the pusherside doors at Armco's Houston, Texas, coke battery.

Another type of hood for the coke oven is provided by a hinged plate on the door. The hinged plate forms a channel between the door and the buckstay (Figure 4-22).[72] A suction conduit is located above these channels. An alternate method is use of an air curtain along the buckstay. This hood technology provides for the removal of the escaping gases to eliminate the emission of carcinogenic substances. Capital investment in a fume-cleaning system is also required for this technology.

A third hood device is created by a door which is hinged to the buckstay and creates a chimney to direct gases to a hood above the oven door (Figure 4-23).[73] The chimneys are required because high winds deflect emissions from the hoods over the door.[74] This technology has been tested on 10 doors. The capital and operating costs, as well as the energy requirements, are expected to be similar to the other two hood systems.

For hood collection and recovery systems, both the capital and operating costs are expected to be significant. The nature of the operating cost will depend upon the air treatment used. The recovery of the emissions would involve generation of solid waste and tar. These wastes are expected to be hazardous and may require special treatment before disposal; however, they could be used for burning or recycle through the coke ovens if they are in a suitable form. One additional disadvantage of hoods is that cross winds disrupt emission collection and may make some hood designs completely ineffective.

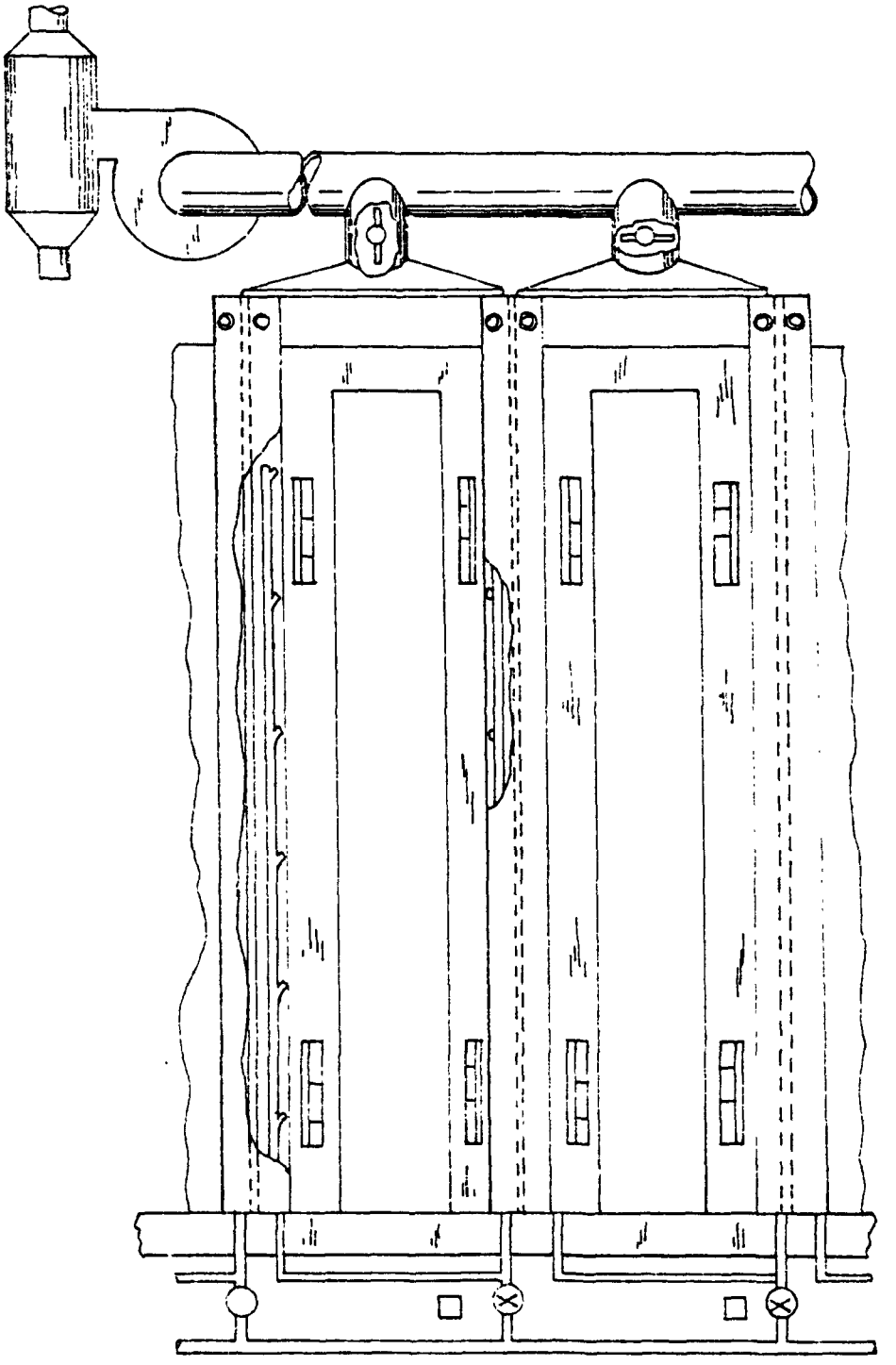

Figure 4-21. Coke oven door hood that assists in controlling pushing emissions.[71]

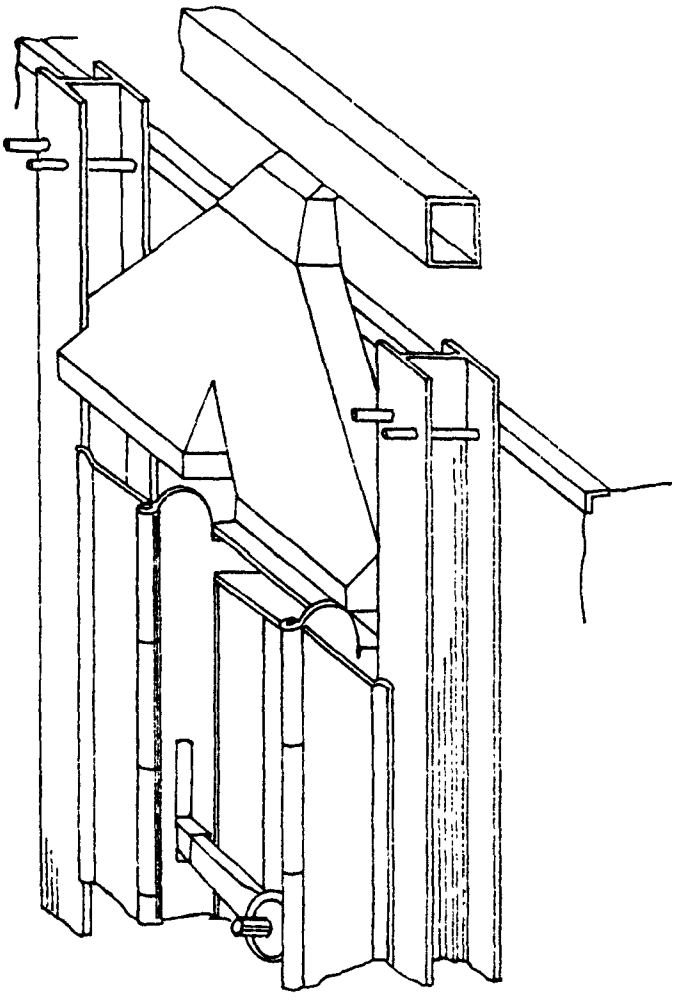

Exterior View

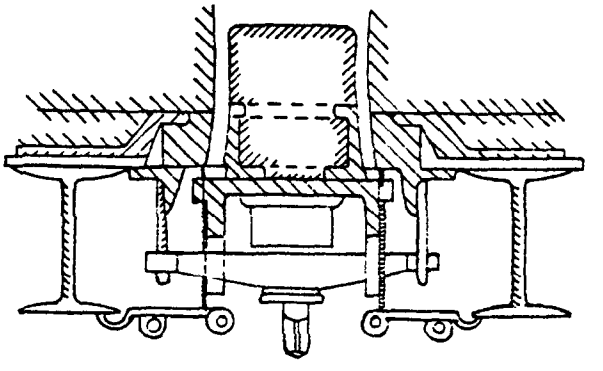

Cross Section View

Figure 4-22. Channel for the passage of gas formed by hinged plates on the door.[72]

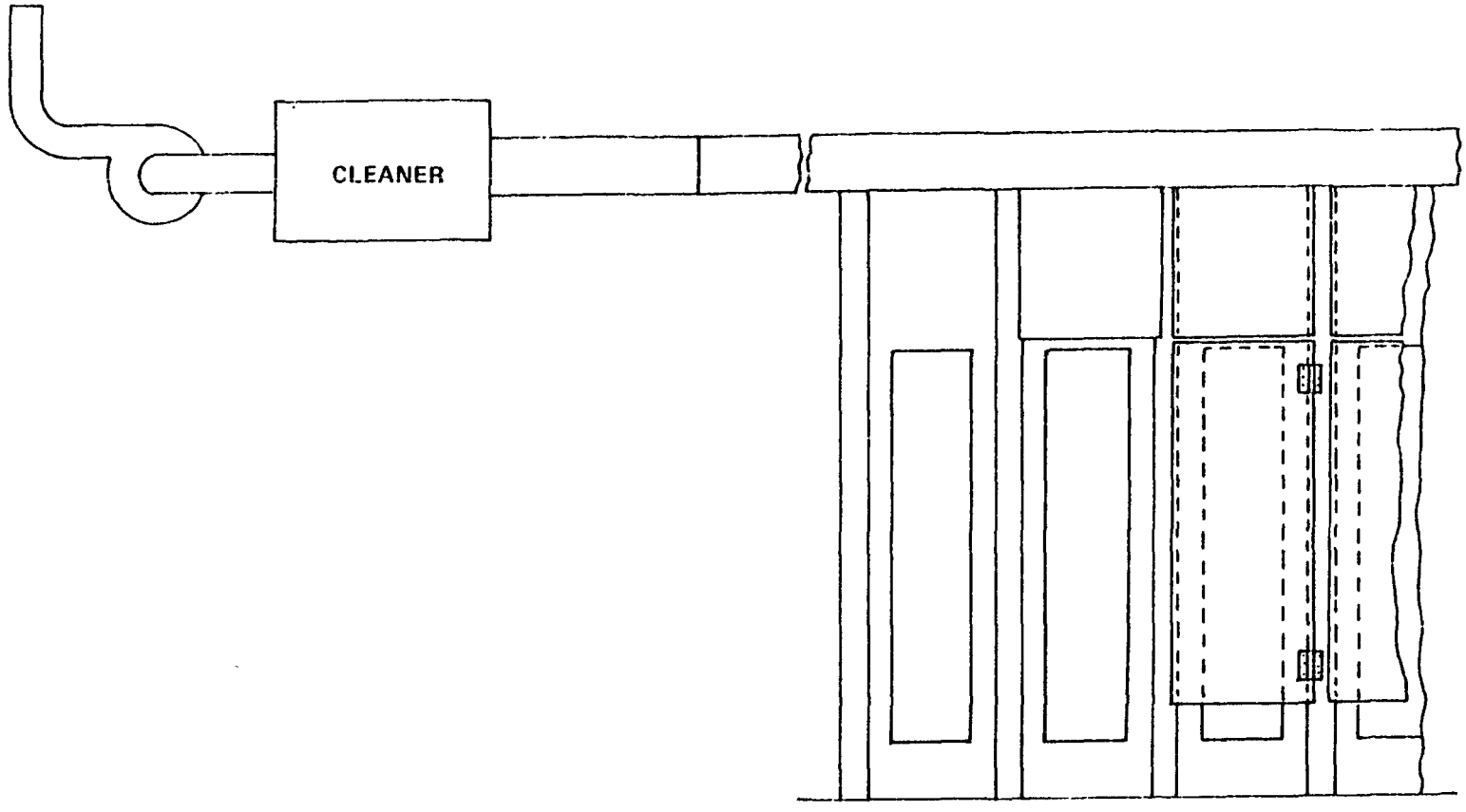

Figure 4-23. Channel for the passage of gas formed by a door hinged to a buckstay.[73]

4.2.3.5 Cokeside Sheds. Cokeside sheds are similar in principle to individual door hoods, but they enclose the whole oven door area within a single structure. A shed can be used to capture door leak emissions, but its primary purpose is the control of pushing emissions. Therefore, there are no shed installations covering both the pusherside and cokeside doors. Sheds can be constructed on the pusher side; however, this method would be more complicated because the pusher machine needs more horizontal clearance for the pusher ram and leveler bar.

Obviously, shed exhaust must be vented to a fume cleaner just as door hood exhaust is vented and this leads to the disposal problems previously cited. A further possible, and perhaps more significant, disadvantage to using sheds is the potential for increased worker exposure to carcinogenic emissions contained by the sheds. Also, poor lighting conditions within the sheds and the presence of the sheds make it more likely that good door maintenance will not be performed unless there is a serious risk of door fires. Depending on the control device attached to the shed exhaust, the net change in emissions may not be nearly as good as that resulting from an effective door rehabilitation and maintenance program.

One control device in present use is a wet electrostatic precipitator (WESP). A WESP has been used to remove BaP and other polycyclic organic material from the gas collected by a cokeside shed at Wisconsin Steel's battery. Four tests for POM were conducted on the inlet and outlet of the WESP when coke was not being pushed.[75] The testing showed a removal efficiency of over 93 percent for all POM except naphthalene, with an average efficiency of 95.6 percent. BaP was reduced from an inlet concentration of 141 ng/m^3 to 1.82 ng/m^3, an efficiency of 98.6 percent. The overall POM removal efficiency, including naphthalene, was 69 percent.[76]

This WESP was a MikroPul® type used to remove pollutants from pushing emissions and fugitive emissions from 45 cokeside doors. The precipitator collector consists of two parallel units, each designed for a flow rate of 50 m^3/s (100,000 actual ft^3/min). The design inlet and outlet temperatures are 73° C and 43° C, respectively. Each precipitator is a two-field unit which provides for about 4.9 m of electrical treatment length. From each precipitator, the gas flow passes to an induced-draft fan. The two fan

outlets are connected to a common 2.4-meter (8-foot) diameter stack which is 24 m (80 ft) high. A common water-treatment system including pH control tanks and recirculating pumps is located under the precipitators. The design water flow rate is about 0.04 m^3/s (600 gal/min).[76]

A test was conducted on Armco's Houston, Texas, cokeside shed during nonpush periods. The data showed an emission rate of 11.2 to 13.1 kg benzene soluble organics (BSO) per hour during normal production with a removal efficiency by WESP of 43 to 52 percent.[77] Although the WESP design parameters are essentially the same as those described previously (same manufacturer), one of the two parallel units was inoperative because of corrosion problems; therefore, a lower efficiency was observed.[78] An average of 34 percent of the cokeside doors were leaking during these two test runs, and the BSO emission factor was about 0.25 kg of BSO per megagram of coal charged.[77]

4.2.3.6 Vented Plug.[54 55] At the time this chapter was written (1979), the vented plug had been in use on commercial coke batteries for about 1 year. The vented plug provides a gas escape from the bottom to the top of the oven to reduce the pressures which build up at the base of the oven door, thereby reducing leaks. In practice, emissions from oven doors were reduced by 5 to 10 percent when initially the emissions were in the 40 to 60 PLD range.[55] However, there has been no report of the effectiveness of the vented plug when initial leakage was in the 10 PLD range.

The vented plug is an encouraging technology because it can supplement seal technology and requires no energy input for its performance. A sketch of the vented plug is presented in Figure 4-24. The large hole in the plug has been less subject to plugging than vents along the sides of the coke oven doors. There is some variability in the cleaning needed for the vented plug. Although one company reported no required cleaning and no heat damage,[55] another company reported fouling and plugging.[69] The difference in performance of the two vented plugs could reflect process differences in the batteries. The type of coal used and the amount of air entering the process could account for differences in the carbon formation in the plug. One disadvantage of vented plugs is that they are more expensive and tend to break more easily than conventional plugs.

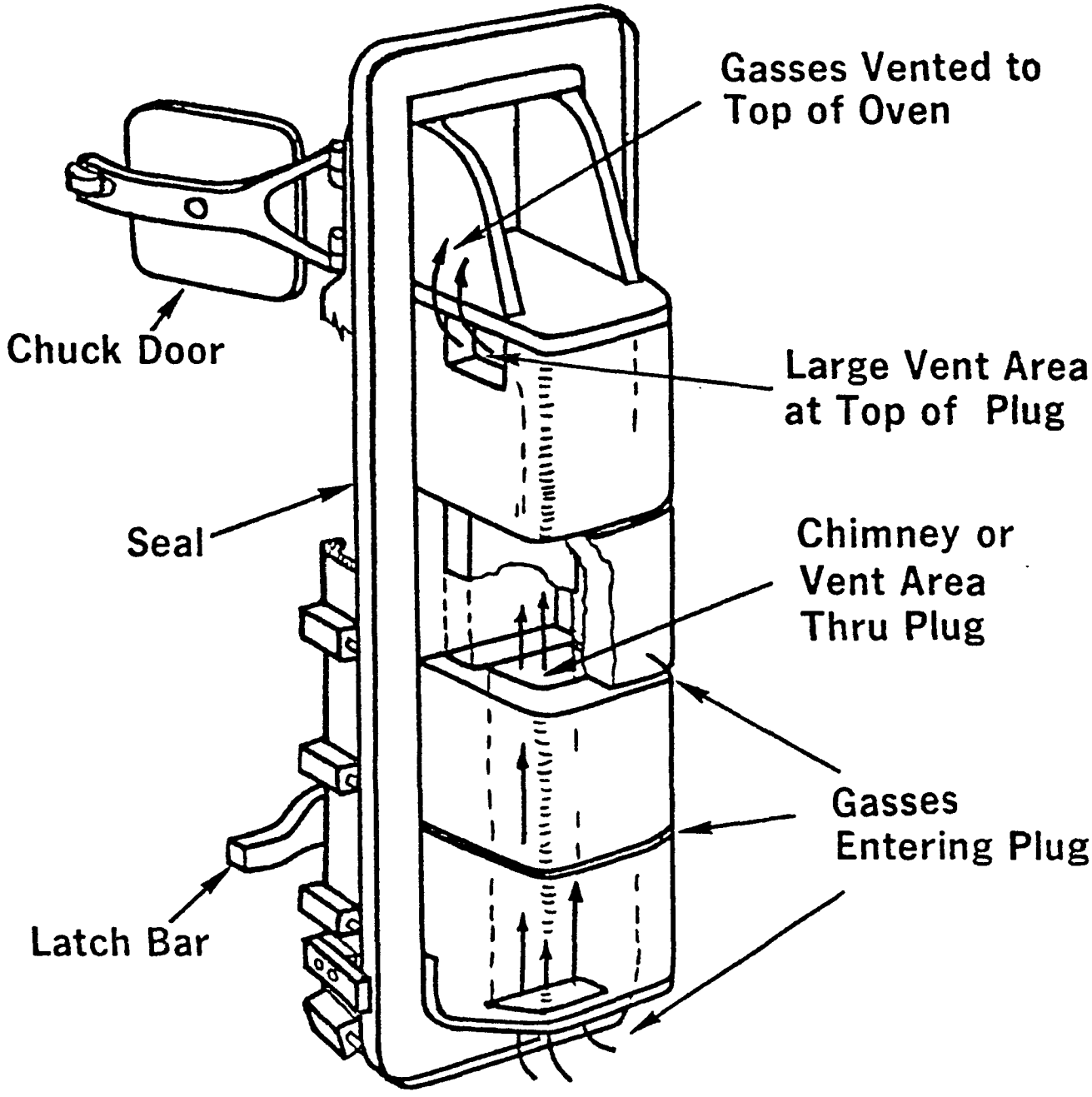

Figure 4-24. Vented plug on pusherside door.[55]

4.2.3.7 Jamb Design. A recent development is a novel jamb design (Figure 4-25) which can be straightened while it is on the battery. The jamb is designed to reduce stress creep. Theoretically, the design allows the jamb to operate at lower temperatures. Twenty-five of these jambs were in operation in August 1978.

One possible advantage of this jamb is that it may have a longer life-time than conventional jambs. The economics depend upon the replacement rate, because the modified jamb is approximately four times as expensive as conventional jambs. However, the jamb fabrication may be somewhat difficult in large scale production. There has been no evidence of any emissions reductions from the use of the modified jamb.[55]

4.2.3.8 Heat-Settable Sealant.[79] A heat-settable sealant, claimed to be an improvement over traditional luting, is formed with starch, water, and clay slurry and injected into a channel in the door seal. Some small-scale trials and plant trials of one or two doors on a battery have been attempted with this emission control technique. The process is claimed to have low manpower and operating cost and to eliminate fumes and fires. Better heat distribution is obtained in the oven because of the reduction in leakage. Door warping is minimized and accurate leveling of doors is not as critical. Cleaning of the door and jamb are eliminated, because the sealant does not stick to the oven. These advantages are claims and have not been demonstrated in full-scale operations.

4.2.3.9 Inboard-Luting. One technology that has been proposed to reduce oven emissions is use of luting in addition to current metal-to-metal seals.[43] The advantages of this technique are that it has the potential for eliminating all emissions and can be used on old batteries with defective seals. Seal and jamb damage caused by fires and high temperatures is reduced. Air leakage into the oven in the later stage of the coking process would be reduced.

4.2.4 Startup, Shutdown, Upsets, and Breakdowns

The emission rate from coke oven doors during startup and shutdown operations is expected to be lower than during normal operations. One reason for the lower emission rate is that the initial heatup or shutdown of a battery requires 5 to 7 weeks; therefore, shutdowns are very infrequent and are undertaken only as a last resort. Also, the coking rate is much

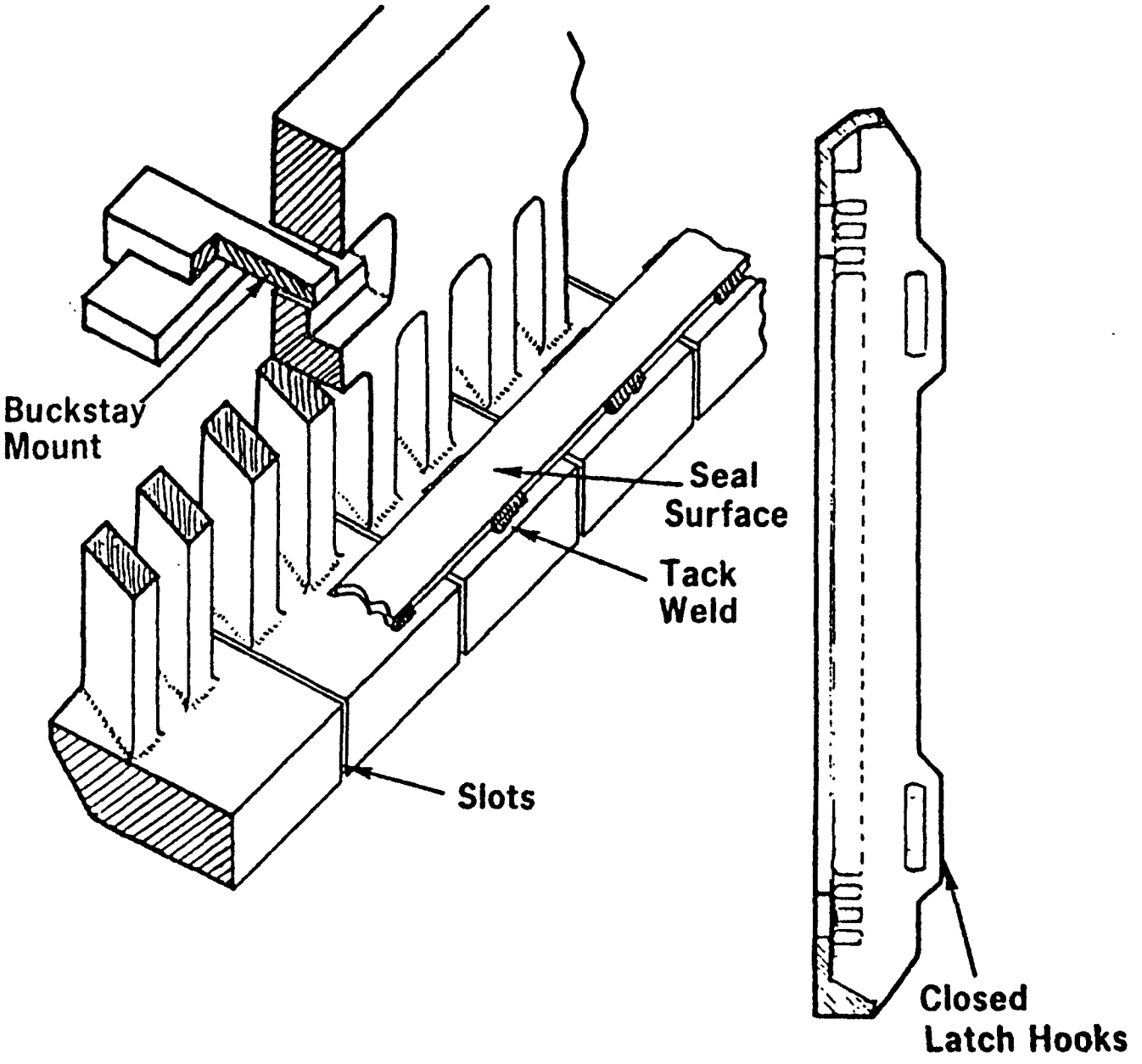

Figure 4-25. Slotted jamb design.

slower during a heatup or shutdown because of lower coking temperatures. This slow coking rate results in a slower evolution of gases, lower oven pressures, and consequently fewer and smaller leaks. An oven is probably in better condition during an initial heatup, because repairs are usually performed during a shutdown.

Process upsets that affect oven pressures have a significant impact on door emissions. For example, the pressure regulating valve, usually located in the crossover main between the collecting main and suction main, controls the collecting main pressure and consequently affects oven pressure. If this valve malfunctioned, the oven pressure could increase and cause an increase in door leaks. Dirty standpipes and goosenecks may plug during the coking cycle and cause excessive pressures to build up in the oven. Periodic cleaning remedies this plugging problem. The pressure in the bottom of the oven may also be increased if the door's gas channel or vented plug fouls because of accumulation of carbon deposits. These upsets may be avoided by regular inspection, maintenance, and cleaning.

Another factor that may cause a process upset is the introduction of a high-moisture or high-volatile coal into the oven. The rapid evolution of these additional volatiles at the beginning of the coking cycle may increase the oven pressure and initially increase the steam content of the gas. Both of these factors tend to increase leaks and door sealing time.

In the previous sections, the details of existing control systems, their susceptibility to breakdown, and the avoidability of breakdown are discussed in detail for each control technique. Data are unavailable on the frequency of occurrence and the increase in emissions resulting from these upsets and breakdowns.

4.2.5 Door Controls for Tall Ovens

The metal-to-metal seal technology that was previously discussed applies to tall (6-meter) ovens. However, a review of the available data indicates that these tall ovens do not control door leaks as well as the smaller ovens.

There are several possible explanations for this control level. The potential for leak occurrence is almost doubled because of the larger door perimeter where the sealing edge must contact the jamb. In addition, the oven pressure at the bottom of a 6-meter door is greater than on smaller

doors for batteries operating at the same collecting main pressure. Also, when dry coal is charged, the resulting pressure surges may increase leaks. Nine of the 10 batteries presently charging dry coal have tall ovens. Door leak data were obtained for three tall batteries. National Steel's Battery 1 at Weirton averaged 2.9 PLD over 4 days of observations with a range of 1.2 to 4.8 PLD.[24] For U.S. Steel's Battery 2 at Fairfield, seven observations over 4 days averaged 7.2 PLD with a range of 2.6 to 12.7 PLD.[27] Lone Star's new 5-meter battery averaged 0.4 PLD with a range of 0 to 1.4 PLD from 21 observations.[23] The Lone Star data do not include chuck door leaks.

4.2.6 Summary of Door Leak Control Performance

A review of EPA data on door leak control performance revealed that the best control of door leaks is provided by the modified seal technology coupled with a leak control program of routine inspection, cleaning, and repair. This technology has been implemented on the batteries at CF&I and U.S. Steel, Clairton. The data for the three CF&I batteries and 14 U.S. Steel, Clairton batteries are summarized in Table 4-10. A wide range of battery types is included in the data base. The types of original door construction include Koppers, Koppers-Becker, and Wilputte. The battery age ranges from 1951 to newly rebuilt, and batteries that are scheduled for rebuilt or replacement in the next 2 to 6 years are included.

The test method for door leaks states that PLD is calculated by dividing the number of leaking doors by the total number of doors on operating ovens. The test method also recommends an attempt to observe doors that were previously blocked from view; however, the total number of doors is always used in the denominator of the PLD calculation. Some of the data summarized in Table 4-10 were originally reported as the number of leaking doors divided by the number of doors observed. These data were converted to be consistent with the proposed test method summarized in Appendix D. In most cases, the orginally reported PLD changed by only 0.1 to 0.2 percent.

No tall batteries that had implemented the modified seal technology were identified. Because tall batteries may have a more difficult control problem, the industry was surveyed to determine how door leaks from tall batteries were controlled. U.S. Steel Battery 2 at Fairfield is a 6-meter battery that has accomplished effective control by a door leak control

TABLE 4-10. SUMMARY OF DOOR LEAK DATA[a]

Company	Battery	Date	Average PLD	Range PLD	Number of observations
U.S. Steel, Clairton[20]	3	2/80	0.8	0 - 1.6	4
	1	8/79	1.0	0 - 2.3	7
	2	8/79	2.2	0 - 5.5	7
	7	2/80	2.9	0 - 5.5	4
National Steel, Weirton[24]	1[b]	6/82	2.9	1.2 - 4.8	5
U.S. Steel, Clairton[20]	21	8/79	3.0	1.1 - 5.7	5
CF&I, Pueblo[80]	C	3/78	3.2	1.1 - 6.4	27
U.S. Steel, Clairton[20]	22	8/79	3.5	2.3 - 5.2	6
	19	8/79	3.9	3.4 - 4.6	5
U.S. Steel, Fairfield[27]	9[c]	6/79	3.9	2.7 - 4.8	6
CF&I, Pueblo[80]	B	3/78	4.3	0.8 - 9.2	28
U.S. Steel, Clairton[20]	20	8/79	4.5	2.3 - 7.5	9
	16	2/80	5.0	4.2 - 6.7	4
	10	2/80	5.8	4.8 - 7.1	2
CF&I, Pueblo[80]	D	3/78	5.9	1.1 - 16.1	27
U.S. Steel, Clairton[20]	8	2/80	6.1	5.5 - 6.3	4
	17	2/80	6.2	4.9 - 8.2	4
U.S. Steel, Fairfield[27]	2[b]	6/79	7.2	3.0 - 13.0	7
U.S. Steel, Clairton[20]	11	2/80	8.9	5.5 - 14.1	3
	9	2/80	9.4	3.9 - 16.4	4

[a]The batteries at CF&I and U.S. Steel, Clairton have implemented the modified seal technology.

[b]A 6-meter battery without the modified seal technology.

[c]A rebuilt battery without the modified seal technology.

program of monitoring, cleaning, and repair or replacement of damaged seals. Battery 2 has a typical spring-plunger knife edge seal, an automatic door cleaner supplemented by manual cleaning, and an accurate door positioning system. Although this 6-meter battery does not use the modified seal technology, the baseline requirements of a door leak control program have been implemented. This battery was added to the data base to represent the control performance that could be attained by a tall battery. The control performance of Battery 2 supports the observation that many short batteries can control door leaks better than tall batteries. However, 7 PLD is better than the control performance of two U.S. Steel, Clairton short batteries that have implemented the modified seal technology.

Battery 9 at U.S. Steel, Fairfield was examined to determine if a recently rebuilt battery (1979) could control emissions better than an older battery with the modified seal technology. The control technique for this battery is also a door leak control program that includes proper door placement, routine cleaning and repair, and a detailed procedure for cleaning the door jamb and seal. The performance of this rebuilt battery is not obviously better than that of the older U.S. Steel, Clairton batteries that have been retrofitted with the modified seal technology.

The statistical analysis of the door leak data revealed that a Poisson distribution was applicable. The 95-percent confidence level was estimated for various average PLDs, based on a minimum of three inspections. The average PLD and the 95-percent level associated with this average are listed in Table 4-11.

TABLE 4-11. CONFIDENCE LEVELS FOR DOOR LEAK DATA

Average PLD	95-percent confidence level[a]
4	7
6	8
7	10
9	12

[a]Based on three inspections. For a battery of 50 ovens with 100 doors, at least 300 individual door observations are made.

Ten of the U.S. Steel and CF&I batteries averaged 4 PLD or less with a 95-percent confidence level of 7 PLD. A total of 18 of the 20 batteries listed in Table 4-10 averaged 7 PLD or less with a 95-percent confidence level of 10 PLD. Two of the U.S. Steel batteries (Batteries 9 and 11) averaged around 9 PLD during the EPA inspection. Self-monitoring data for Battery 9 were available for 685 daily observations over a period of 25 months of operation after the EPA inspection in February 1980. These data averaged 5.3 PLD (excluding 2 doors) or 6.9 PLD with no exclusions. Battery 11 remained in operation for 5 months following the EPA inspection and 130 observations revealed an average of 4.1 PLD (excluding 2 doors) or 5.7 with no exclusions. The long-term data for Batteries 9 and 11 indicated that door leak emission control improved to levels better than 7 PLD. Consequently, an average performance of 7 PLD (maximum) can be obtained with U.S. Steel's door control technology with an upper 95-percent confidence level of 10 PLD.

4.3 TECHNOLOGY FOR THE CONTROL OF TOPSIDE LEAKS (CHARGING PORT LIDS AND STANDPIPES)

4.3.1 Description

Leaks occur around the rims of charging port and standpipe lids; standpipes can also leak at their bases or through other cracks. These leaks are primarily controlled by proper maintenance and operating procedures which include:

- Replacement of warped lids,
- Cleaning carbon deposits or other obstructions from the mating surfaces of lids or their seats,
- Patching or replacing cracked standpipes,
- Sealing lids after a charge or whenever necessary with a slurry mixture of clay, coal, and other materials (commonly called lute), and
- Sealing cracks at the base of a standpipe with the same slurry mixture.

Luting mixtures are generally prepared by plant personnel according to formulas developed by each plant. The consistency (thickness) of the mixture is adjusted to suit different applications. Charging port lids are relatively horizontal; therefore, a thinner mixture can be used to

seal them. Standpipe lids come in a variety of positions; those that are not horizontal require a thicker mixture to prevent runoff. In one study,[81] at least three surveyed plants reported that adjusting the mixture consistency allowed successful use of luting mixtures on standpipe lids. Careful application of lute is necessary to prevent a buildup of residue which can cause standpipes to burn out. The buildup must be removed from sealing surfaces when lids are opened, to prevent poor sealing when the lids are closed again.

Some plants report that residue from lute interferes with the use of magnetic lid lifters. This interference could occur if the luting mixture was applied carelessly or was covering the lid or if the mixture residue was allowed to build up. Plant personnel from two plants contacted in one study[81] reported that they have no problem with lute residue, but they were aware that residue could accumulate without proper attention to operations. The actions taken to avoid the problem were careful application of the lute and cleaning the residue from the lids.

Some equipment designs may reduce the effort required to keep leaks sealed. Heavier lids or better sealing edges may reduce leaks. Automatic lid lifters can rotate charging-hole lids after they are seated and provide a better seal. Even with such equipment, manual effort will still be required to seal leaks.

After closely examining their program for controlling topside leaks, CF&I made several changes in their emission control methods. One method used increased supervisor attention to emphasize that oven top workers use additional care and effort to replace and set standpipe caps and charging lids properly. However, the configuration of standpipe caps and goosenecks was not conducive to luting, and numerous caps that were not making an adequate mechanical seal had to be hit into place with a bar. The caps were placed in a lathe and the diameter was reduced 19 mm (0.75 in) to allow the cap to be self-positioning when dropped into place. The modified cap seated lower in relation to the gooseneck; this allowed luting material to be held in position and effectively sealed the caps.[19]

CF&I decided "that a better overall luting practice would be the most expeditious manner to achieve the lowest top emissions." An improved

luting slurry was developed and luting tanks were added to the larry cars to carry the material on board. The luting tanks on the larry cars make the luting slurry readily available for the larry car operator to seal the standpipe caps and for the lidman to seal the charging port lids.[19] An alternative to carrying the luting tank on the larry car would be to place pails of the luting slurry at convenient locations on the battery top. This reduces the worker effort to lute or relute leaks because the material is readily available and the worker would not be required to walk the length of the battery to obtain the necessary luting mixture.

Another improvement made at CF&I was in the control of collecting main backpressure because pressure surges of 10 to 20 mm of water can break the seal on luted lids and caps. Improved backpressure control was obtained by altering the procedure for turning on the steam aspiration and by modifying the pressure control system for the collecting main. Another pressure control problem was created when the steam aspiration was inadvertently left on after an oven was charged. Each steam aspiration system was fitted with a pipe nipple having a small hole and a directional check valve installed between the nipple and aspiration jet. If the steam aspiration system were inadvertently left on, the steam flow from the small hole would be visible and audible and would indicate a procedural deviation.[19]

Because there are many places where leaks can develop, keeping all charging lid and standpipe leaks sealed is a continuous job. In essence, success in controlling these emissions is directly related to the amount of manpower and the dedication of the employees.

The number of topside workers required for effective emission control depends upon several factors, such as the job assignment, number of ovens, cycle time, and extent of automation. In general, a battery may have a work force of 4 lidsmen if automatic lid lifters are used or 8 lidsmen if the lid lifting is performed manually. For some batteries, the larry car operator or helper seals standpipe caps; on other batteries the lidsman performs this function. After increasing the topside work force to improve emission control, Kaiser Steel used 48 lidsmen for 7 batteries with 45 ovens each. Kaiser used manual lid lifting, but only

7 lidsmen per battery were required because the batteries were operated as 3 units with overlapping job responsibilities on the individual batteries. The lidsmen job duties included:[82]

1. Inspect every gooseneck, standpipe and charging steam jet prior to charging the oven, and clean as necessary. Routinely clean each of these areas on oven marked "cleaners" (approximately every fifth oven).

2. Ignite standpipe gas emissions if oven is smoking prior to the push. If the emissions cannot be ignited or leaks from the gas main cannot be blocked with charging steam, reseal the standpipe cap.

3. Work with the larry operator to charge each oven according to the published staged charging procedure.

4. After charging is complete, lute all charging hole lids, standpipe caps, and standpipe bases. Relute as necessary to maintain smokeless oven tops.

4.3.2 Performance of Control for Topside Leaks

Mass emission measurements are not available to indicate emission control performance for methods of reducing topside leaks. However, measurement of visible emissions is possible and provides a good indicator of performance for all emissions. Emissions are controlled by sealing the leaks or plugging the holes. If the hole is plugged so that fine particles that make the emissions visible cannot escape, then all emissions, including the carcinogens, are controlled effectively. The emissions from topside leaks (charging port lids and offtakes) for an entire battery are measured by counting the number of leaks that are visible and expressing this number as a percentage of total potential leaks. Each charging port and each standpipe is considered to be a potential source of one leak. (This method of data collection is described in more detail in Appendix D.)

As discussed in Section 4.3.1, the primary technique used to reduce the number of topside leaks is luting (sealing the leaks). With this simple technique of sealing holes that allow coke oven emissions to escape to the atmosphere, it is plausible that the number of leaks depends on the effort applied to luting. Greater effort can be achieved by making luting a prime responsibility of topside workers. Additional

manpower may be required to carry out this responsibility. The emission control performance increases proportionally with the diligence of workers in watching for leaks and promptly sealing them. Theoretically, the percentage of topside leaks measured by the method cited previously can be reduced to near zero if all leaks are sealed as soon as they appear.

Data on percent leaks for charging port lids are presented in Tables 4-12 and 4-13. The data were gathered at U.S. Steel, Fairfield and U.S. Steel, Clairton. The data in Table 4-12 for two batteries at Fairfield show that the average for any test never exceeded 0.5 percent. Out of 221 traverses, the highest single reading was only 3.2 percent. During 6 months of data gathering, the highest monthly averages for seven batteries at Clairton ranged from 0.3 to 0.9 percent. Out of 1,033 traverses on the seven batteries, the highest single reading was only 3.5 percent. This consistently high level of control is attributable to the effort used to seal leaks. The occasional higher reading shown by the data can be prevented by more diligent sealing of leaks as an increase in the number of leaks is observed by the plant operators.

Data on offtake leaks at Kaiser Steel's Fontana, California batteries[86] show the effect of additional manpower at one plant. Table 4-14 presents data for 3 months when one employee per battery per shift was responsible for luting topside leaks and tending to lid removal and replacement. Below these data are data for 6 months after one additional employee was provided to help with luting and tending the lids. For all seven batteries at Fontana, there was substantial improvement in control of offtake leaks after the second employee was hired. The improvement ranged from 35 to 56 percent fewer leaks for the seven batteries. The level of effort provided was sufficient to lower the average PLO below the local requirement of 10 PLO. The percentage of individual readings with a value of 5 percent leaks or less is also shown on Table 4-14. From these data, it can be seen that the number of higher single readings is also reduced by an increase in manpower to seal leaks. The remaining higher single readings can be controlled by frequent scrutiny of potential sources of leaks and prompt sealing of the leaks when they appear.

TABLE 4-12. VISIBLE EMISSION DATA ON TOPSIDE LEAKS FROM CHARGING PORT LIDS, U.S. STEEL, FAIRFIELD[15 83 84]

Date	Battery	Number of traverses[a]	Percent leaks observed per traverse[b]	
			Range	Average
July, 1974	5	34	0 - 2.9	0.3
	6	15	0 - 2.9	0.3
September, 1975	5	21	0 - 0.3	0.01
	6	23	0 - 0.3	0.04
April, 1976	5	30	0 - 1.0	0.1
	6	28	0 - 1.0	0.1
December, 1976	5	36	0 - 3.2	0.5
	6	34	0 - 0.6	0.2

[a]A traverse is one recording of leaks from an entire battery.

[b]Percentage of total potential leaks (308 for U.S. Steel, Fairfield).

TABLE 4-13. VISIBLE EMISSION DATA ON TOPSIDE LEAKS FROM CHARGING PORT LIDS U.S. STEEL, CLAIRTON[85]

Date	Battery	Number of[a] Traverses	Percent Leaks Observed Per Traverse[b] Range	Average
September, 1977	12A	26	0 - 0.6	0.1
	15	26	0 - 1.2	0.2
	16	25	0 - 1.2	0.2
	17	25	0 - 0.8	0.2
	19	26	0 - 1.1	0.3
	21	26	0 - 1.5	0.3
	22	26	0 - 1.1	0.5
October, 1977	12A	26	0 - 0.6	0.1
	15	29	0 - 0.8	0.2
	16	29	0 - 0.8	0.1
	17	28	0 - 0.8	0.1
	19	29	0 - 1.1	0.2
	21	28	0 - 0.9	0.2
	22	28	0 - 1.1	0.3
November, 1977	12A	21	0 - 0.6	0.1
	15	26	0 - 1.2	0.1
	16	26	0 - 1.2	0.1
	17	26	0 - 0.8	0.1
	19	23	0 - 0.6	0.1
	21	24	0 - 0.6	0.2
	22	25	0 - 0.6	0.1
December, 1977	12A	14	0 - 0.9	0.1
	15	25	0 - 0.4	0.0
	16	26	0 - 0.8	0.1
	17	25	0 - 0.4	0.1
	19	22	0 - 0.9	0.1
	21	26	0 - 1.2	0.3
	22	27	0 - 0.9	0.2
January, 1978	12A	25	0 - 3.0	0.3
	15	14	0 - 1.2	0.2
	16	20	0 - 1.2	0.3
	17	20	0 - 2.0	0.4
	19	20	0 - 2.6	0.4
	21	22	0 - 3.5	0.9
	22	21	0 - 2.3	0.7
February, 1978	12A	16	0 - 1.8	0.7
	15	27	0 - 2.9	0.8
	16	27	0 - 1.2	0.3
	17	27	0 - 3.3	0.5
	19	27	0 - 1.7	0.3
	21	27	0 - 3.2	0.6
	22	27	0 - 0.9	0.3

[a] A traverse is one recording of leaks from an entire battery.

[b] Percentage of total potential leaks.

TABLE 4-14. VISIBLE EMISSION DATA ON OFFTAKE LEAKS, KAISER STEEL, FONTANA[86]

Luting[a] manpower	Date	Percent leaks for each battery													
		A		B		C		D		E		F		G	
		Average	Percent of readings at 5 or less	Average	Percent of readings at 5 or less	Average	Percent of readings at 5 or less	Average	Percent of readings at 5 or less	Average	Percent of readings at 5 or less	Average	Percent of readings at 5 or less	Average	Percent of readings at 5 or less
1	April 1977	6.1	36	5.1	53	12.0	16	4.7	58	5.3	40	4.9	56	7.1	22
	May 1977	4.3	69	4.0	69	11.4	14	4.4	62	5.6	42	5.3	56	7.6	23
	June 1977	4.4	57	3.8	74	8.9	29	3.0	88	2.7	86	7.0	28	8.2	21
April - June 1977		4.9	54	4.3	65	10.8	20	4.0	69	4.5	56	5.7	47	7.6	22
2	July 1977	2.7	78	2.9	76	4.7	56	1.8	96	1.9	95	4.3	58	3.9	73
	August 1977	2.2	91	2.1	86	3.8	72	2.2	90	2.0	95	3.4	76	3.4	81
	September 1977	2.0	91	1.2	100	4.1	68	1.9	97	1.6	97	2.8	87	2.4	87
	October 1977	2.9	82	2.1	96	5.3	54	1.8	93	2.0	89	2.7	86	5.1	46
	November 1977	3.4	71	4.2	57	5.8	43	1.8	100	2.6	86	3.8	79	4.3	64
	December 1977	4.1	57	4.4	57	4.3	57	2.3	86	2.2	100	4.8	43	3.4	86
July - December 1977		2.9	78	2.8	79	4.7	58	2.0	94	2.1	94	3.6	72	3.8	73

[a]Approximate employees per shift per battery responsible for luting and tending lids.

TABLE 4-15. SUMMARY OF LID LEAK DATA

Company	Battery	Date	Average PLL	Range PLL	Number of observations
U.S. Steel, Clairton[20 88]	1	8/78	0.3	0 - 0.8	9
		8/79	0.2	0 - 0.4	5
		2/80	0.2	0 - 0.4	4
	2	8/78	0.2	0 - 0.8	9
		8/79	0.4	0 - 2	5
		2/80	0.3	0 - 1.2	4
	3	8/78	1.4	0 - 4.7	9
		8/79	0.5	0 - 2	5
		2/80	0.3	0 - 1.2	4
	7	8/78	0.9	0.4 - 2.0	8
		8/79	1.6	1.2 - 2.4	3
		2/80	0.4	0 - 0.8	4
	8	8/78	0.3	0 - 0.8	9
		8/79	0.1	0 - 0.4	3
		2/80	0.3	0 - 0.8	4
	9	8/78	0.9	0 - 2.0	9
		8/79	0.8	0.4 - 1.2	3
		2/80	0.4	0 - 0.8	4
	10	8/78	0.5	0 - 1.2	9
		8/79	0.7	0.4 - 1.2	3
		2/80	0	-	3
	11	8/78	0.5	0 - 1.6	9
		8/79	0	-	3
		2/80	0.3	0 - 0.4	3
	12	8/78	0.5	0 - 1.6	9
		8/79	0	-	3
	12A	8/78	0.6	0 - 2.6	9
	13	8/78	0.4	0 - 1.2	9
	14	8/78	0.3	0 - 1.6	9
	16	8/78	0.2	0 - 0.4	9
		8/79	0.1	0 - 0.4	8
		2/80	0.1	0 - 0.4	3

(continued)

TABLE 4-15. (continued)

Company	Battery	Date	Average PLL	Range PLL	Number of observations
	17	8/78	0.2	0 - 1.2	9
		8/79	0.2	0 - 0.8	7
		2/80	0.1	0 - 0.4	3
	19	8/78	0.4	0 - 1.1	9
		8/79	1.2	0 - 3.5	6
		2/80	0.4	0 - 0.9	5
	20	8/79	0.9	0 - 1.8	7
		2/80	0.7	0 - 1.5	5
	21	8/78	0.2	0 - 0.6	9
		8/79	0.5	0 - 0.9	6
		2/80	0.4	0 - 0.6	4
	22	8/78	0.2	0 - 0.6	9
		8/79	0.9	0 - 1.8	7
		2/80	0.2	0 - 0.9	5
U.S. Steel, Fairfield[27]	2	6/79	0.1	0 - 0.5	6
	6	6/79	1.8	-	1
	9	6/79	0	-	6
Kaiser, Fontana[46]	F	5/79	0	-	8
	G	5/79	0.2	0 - 1.7	8

TABLE 4-16. SUMMARY OF OFFTAKE LEAK DATA

Company	Battery	Date	Average PLO	Range PLO	Number of observations
U.S. Steel, Clairton[20]	1	8/79	0.7	0 - 3.5	7
	2	8/79	0.8	0 - 2.5	7
	3	8/79	0.9	0 - 2.5	7
	7	2/80	1.5	0.8 - 2.5	4
	8	2/80	1.7	0 - 3.6	4
	9	2/80	2.3	0.8 - 4.4	4
	10	2/80	0.6	0 - 0.9	3
	11	2/80	3.4	0 - 6.8	3
	16	8/79	0.8	0 - 2.6	7
	17	8/79	1.8	0.9 - 3.6	7
	19	9/81	1.5	0 - 3.1	5
	20	9/81	1.4	0.6 - 1.9	5
	21	9/81	3.0	0 - 8.5	5
	22	9/81	3.5	0.6 - 9.0	5
U.S. Steel, Fairfield[27]	9	6/79	0.3	0 - 1.7	6

A summary of the data collected by EPA for lid leaks is given in Table 4-15. All of the U.S. Steel, Clairton batteries are included in the data base and reveal a range of averages from 0 to 1.6 PLL. Fourteen batteries in the data base averaged 0.2 PLL or less during at least one inspection, and the highest average for all 23 batteries is 1.8 PLL.

The statistical analysis concluded that a Poisson distribution was applicable for both lid and offtake leaks. The performance of batteries averaging 0.2 PLL yields a 95-percent confidence level of 1 PLL, when averaged over three runs. The highest average observed at U.S. Steel, Clairton during EPA inspections (Battery 7 in August 1979) was 1.6 PLL with a 95-percent confidence level of 2.7 PLL when averaged over three runs. The highest average listed in Table 4-15 is 1.8 PLL with a 95-percent confidence level of 2.9 PLL, averaged over three runs.

A summary of data collected by EPA for offtake leaks is given in Table 4-16. The inspection data for four batteries at U.S. Steel, Clairton in February 1980 are not included in the data base; Batteries 19 and 20 were experiencing problems with gooseneck failure during the inspection, and Batteries 21 and 22 were adversely affected by offtake leakage at the slipjoint.[87] Investigation and correction of these problems was necessary to enable these batteries to meet their existing consent decree requirements of 5 PLO. These four batteries were reinspected in September 1981 after the offtake leak problem had been corrected and show levels of 1.4 to 3.5 PLO. Battery 9 at Fairfield was included to indicate the potential control performance of a rebuilt battery.

Six of the batteries in the data base averaged 0.9 PLO or less with a 95-percent confidence level of 4 PLO when averaged over three runs. The highest value was 3.5 PLO (Battery 22 at Clairton) with a 95-percent confidence level of 6 PLO when averaged over three runs.

Leaks in battery mains on a well maintained battery will occur infrequently. If battery mains are closely watched by plant operators, preventive maintenance and prompt repair of leaks will allow them to be maintained without leaks.

4.4 REFERENCES

1. Clark, F. M. Stage Charging on a Single Collector Main Battery: A Total System Concept. Paper Presented at the 1973 Iron and Steelmaking Conference.

2. Barnes, T. M., et al. Control of Coke Oven Emissions, Ironmaking, and Steelmaking. 1975. p. 165.

3. Iversen, R. E. EPA trip report of a visit to U.S. Steel, Clairton. February 7, 1975.

4. Coke Ovens Designed for Increased Steam Aspiration to Curtail Effluents. Industrial Heating. 39:1098-1100. June 1972.

5. Barnes, T. M., H. W. Lownie, Jr., and J. Varga, Jr. Control of Coke Oven Emissions. American Iron and Steel Institute. December 31, 1973. p. 24-25.

6. Coke Battery Survey - Procedures Description and Data Presentation. U.S. Environmental Protection Agency. Publication Number EPA-330/1-77-012. December 1977. p. 35 and D-17 to D-22.

7. Raw data sheets for an emission test at CF&I, July 26-30, 1977.

8. Coke Battery Data Presentation. U.S. Steel, Gary, Indiana. EPA Contract No. 68-02-2814, Work Assignment 6. June 12, 1979. 114 p.

9. Reference 6, p. 21.

10. Letter from Winkley, J. C. CF&I, to Dickstein, I. L., EPA, Region VIII. July 29, 1977.

11. Jones, L. G. EPA trip report of a visit to U.S. Steel, Gary. September 1, 1976.

12. Munson, J. G., et al. Emission Control in Coking Operations by Use of Stage Charging. Journal of the Air Pollution Control Association, 24:1059-1062. 1974.

13. Trenholm, A. R. International Trip Report. February 18, 1976.

14. Reference 5, p. 30-31.

15. Iversen, R. E. EPA trip report of a visit to U.S. Steel, Fairfield, December 4, 1974.

16. VanOsdell, D. W., et al. Research Triangle Institute trip report to U.S. Steel, Fairfield. October 27, 1977.

17. Baldwin, V. H. and D. W. Coy. Study to Develop Retrofit Information and Other Data for Use in Setting Standards for Coke Oven Emissions. Prepared by the Research Triangle Institute for the Environmental Protection Agency. EPA Contract Number 68-02-2612. Task 39. March, 1978. 112 p.

18. Phelps, R. G. Manager of Primary Technology, Inland Steel Company. Comments on Proposed National Standards: By-Product Coke Oven Wet-Coal Charging and Topside Leaks. July 26, 1978.

19. Oliver, J. F. and J. T. Lane. Control of Visible Emissions at CF&I's Coke Plant-Pueblo, Colorado. Journal of the Air Pollution Control Association. 29(9):September 1979. p. 920-925.

20. Data collected by GCA Corporation and EPA Region III at U.S. Steel, Clairton. August 1979, February 1980, and September 1981.

21. Data collected by GCA Corporation and EPA Region III at Bethlehem Steel, Burns Harbor. May 1980.

22. Raw data sheets on file at EPA Region III for J&L, Pittsburgh emission test. Inspections in December 1978 and August 1979.

23. Data collected at Lone Star Steel for Texas Air Control Board by Radian Corporation. December 26, 1979.

24. Data collected by GCA Corporation and EPA Region III at National Steel, Weirton. August 1981 and June 1982.

25. Raw data sheets on file at EPA Region III for Shenango, Incorporated, Neville Island, Pennsylvania. Inspection in October, 1980.

26. Coke Battery Survey: Procedures, Description, and Data Presentation, U.S. Steel, Fairfield. EPA-330/1-77-012. December 1977.

27. Data collected by GCA Corporation and EPA Region III at U.S. Steel, Fairfield. June 1979.

28. Draft of Standards Support and Environmental Impact Statement Volume I: Proposed National Emission Standard By-Product Coke Oven Wet Coal Charging and Topside Leaks. Emission Standards and Enginering Division. U.S. EPA. p. 4-39 to 4-42. June 1978.

29. Stolz, J. H. Coal Charging Pollution Control Demonstration. EPA-650/2-74-022. March 1974.

30. Bee, R. E., et al. Coke Oven Charging Emission Control Test Program - Volume I. 163 pp. July 1974.

31. Reference 30, p. 111-117.

32. Reference 29, p. 67.

33. Reference 29, p. 6.

34. Balla, D. A. and G. E. Wieland. Performance of Gas-Cleaning System on Coke Oven Larry Car at Burns Harbor. Iron and Steel Engineer. December 1970. p. 79.

35. Reference 5, p. 27.

36. Reference 5, p. 28-29.

37. Reference 5, p. 26-27.

38. Reference 5, p. 28.

39. Lownie, Jr., H. W. and A. O. Hoffman. A Research Approach to Coke-Oven End-Closure Problems. Ironmaking Proceedings, 35, 109(1976).

40. Giunta, J. S. U.S. Steel Development of Coke-Oven-Door System Technology. Paper 12d. AIChE Meeting, Atlanta. February 26-March 1 1978.

41. Stanley, R. W. Coke Oven Door System: Field Data. Paper 12b. AIChE Meeting, Atlanta. February 26-March 1, 1978.

42. McGannon, H. E. (ed.). The Making, Shaping, and Treating of Steel. 9th Ed. U.S. Steel Corporation. Pittsburgh. 1971.

43. Proposed Interim Report on Development of Concepts for Improving Coke-Oven Door Seals. Summary of Task 4: Pre-engineering Analysis Evaluations and Recommendations. Battelle Columbus Laboratories. March 1978.

44. Trip Report, U.S. Steel. Research Triangle Institute. September 8, 1978.

45. Schultz, L. D. Control of Coke Oven Door Emissions. Allied Chemical Co., Semet-Solvay Division. Paper 12c. AIChE Meeting, Atlanta. February 26-March 1, 1978.

46. Data collected by GCA Corporation and EPA Region III at Kaiser Steel. May 1979.

47. Clayton Environmental Consultants, Inc. Coke Oven Emissions: Visible Observations of Coke Oven Door Leaks. EMB Report No. 79-CKO-23. p. 3. November 1979.

48. Wolff, G. Jr. Wolff Prechamber Door. Advertising Literature. Ferrostaal Overseas Corporation.

49. Data obtained from Jefferson County Department of Health. Birmingham, Alabama. 1978.

50. Reference 47, Koppers in Erie, Pennsylvania. p. 1-3.

51. Hopper, Allen T. and E. N. Kaznetsov. Summary Report on Task-I Mathematical Modeling and Analysis of End-Closure Systems. EPA Contract No. 68-02-2173.

52. Hopper, Allen T., R. L. Paul, and D. N. Gideon. Summary Working Paper on Task II Physical Modeling and Laboratory Experiments. EPA Contract No. 68-02-2173. January 10, 1978.

53. Hoffman, A. E. Report on Official Travel. November 3, 1977.

54. Barchfeld, F. J., C. C. Gerding, and J. M. Stoll. Coke Oven Door Emission Control Technology. Paper 12a. AIChE Meeting, Atlanta. February 26-March 1, 1978.

55. Trip Report, J&L Steel. Research Triangle Institute. August 22, 1978.

56. Here's A Good News For You. Advertising product literature. Iron Works Company, Ltd. 1979.

57. Sealant Interlake Asbestos. Battelle Columbus Laboratories. Task 3 Progress Narrative. July 1977.

58. Letter from Reichhardt, Heinz A. to McCrillis, Robert C., Metallurgical Processes (MD-62), EPA. June 13, 1977.

59. Klotz, W. L. Research Triangle Institute trip report to National Steel's Zug Island plant. September 18, 1979.

60. Phelps, R. G. AISI-EPA-Battelle Coke Oven Door Sealing Program. JAPCA. 29, p. 908, September 1979.

61. Lownie, H. W., et al. Study of Concepts for Minimizing Emissions from Coke-Oven Door Seals. EPA-690/2-75-064. July 1975.

62. Telecon. Jablin, R. with Feiser, Art, A. F. Industries. July 10, 1978.

63. Coy, D. W. Meeting with Freidhelm Haaf and Werner Schmitz, Fried. Krupp GMBH, Oberhausen Works. West Germany. March 15, 1979.

64. Letter from Reichhardt, Heinz A. to McCrillis, Robert C., Metallurgical Processes (MD-62), EPA. July 1977.

65. Acheren, Joseph Van and Linwood G. Tucker. U.S. Patent 4,067,778. January 10, 1978.

66. Graham, J. P. and B. P. Kirk. Problems of Coke-Oven Air-Pollution Control. The Metals Society. London. p. 82-100.

67. Lowry, H. H. (ed.). Chemistry of Coal Utilization. Supplementary volume. John Wiley and Sons, Incorporated. New York. 1963.

68. Hoffman, A. L. Interlake Trip Report. June 1, 1977.

69. Trip Report to U.S. Steel. Research Triangle Institute. September 8, 1978.

70. Apparatus for Sealing a Coking Chamber. U.S. Patent 4,033,827.

71. Oven Door Fume Collection System. U.S. Patent 3,933,595.

72. Coking Oven. Hartung, Kuhn, and Company. Dusseldorf, Germany. U.S. Patent 3,957,591.

73. Control of Coke Oven Door Emissions. Interlake Incorporated, Chicago, Illinois. U.S. Patent 3,926,740.

74. Telecon. Jablin, R. with Armour, Frank, Interlake Steel. June 30, 1978.

75. Air Pollution Emission Test, Final Report, Wisconsin Steel Co. Report No. 77-CKO-11-A. EPA Contract No. 68-02-2817. May 1978.

76. Barrett, R. E. et al. Effectiveness of a Wet Electrostatic Precipitator for Controlling POM Emissions From Coke Oven Door Leakage. APCA Meeting, Houston, Texas. June 1978.

77. Benzene Soluble Organics Study - Coke Oven Door Leaks. Clayton Environmental Consultants, Inc. EMB Report No. 70-CKO-22. December 1979.

78. Branscome, M. Research Triangle Institute trip report to Armco, Inc., Houston, Texas. October 23, 1979.

79. Calderon, Albert. Coke Oven Door with Heat Settable Sealants. U.S. Patent 3,875,018.

80. Data collected by National Enforcement Investigation Center, Denver, Colorado at CF&I. Inspections in February and March, 1978.

81. Reference 17, pp. 26-77.

82. Kaiser Steel Corporation. Coke Oven Emission Control Plan. May 1977.

83. Reference 6, pp. D-28 to D-29.

84. Reference 28, p. 4-56.

85. Reference 28, p. 4-57.

86. Reference 28, p. 4-61.

87. Letter from Stromness, N. R., U. S. Steel Corporation, to Maslany, T., EPA. October 17, 1980.

88. Data on file at EPA Region III for U.S. Steel, Clairton. Inspections in August 1978.

5. MODIFICATIONS

5.1 BACKGROUND

The purpose of this chapter is to discuss coke plant changes that could be deemed "modifications." A national emission standard for hazardous air pollutants (NESHAP) is applicable to both existing and new sources of the hazardous pollutant to which the NESHAP applies. A new source is defined under 40 CFR 61.02 as one that commenced construction or modification after the proposal date of the applicable NESHAP. An existing source is defined as any stationary source that is not a new source. An owner or operator of an existing source planning to modify that source must apply to the U.S. Environmental Protection Agency (EPA) Administrator for approval prior to beginning the modification (see 40 CFR 61.07).

A modification is defined under 40 CFR 61.02 as

> any physical change in, or change in the method of operation of, a stationary source which increases the amount of any hazardous air pollutant emitted by such source or which results in the emission of any hazardous air pollutant not previously emitted, except that:
> (1) Routine maintenance, repair, and replacement shall not be considered physical changes, and
> (2) The following shall not be considered a change in the method of operation:
> (i) An increase in the production rate, if such increase does not exceed the operating design capacity of the stationary source;
> (ii) An increase in hours of operation.[1]

5.2 POSSIBLE MODIFICATIONS

Equipment or process modifications the by-product coke industry theoretically could make to the existing facility are numerous. However, several factors greatly limit the determination of whether a modification qualifies as a modification under Section 61.02. First, the existence of Occupational Safety and Health Administration (OSHA)

and State Implementation Plan (SIP) regulations establishes a regulatory baseline that the by-product coke industry is striving to meet. Consequently, many modifications a plant would undertake on the existing facility are designed to comply with the existing regulation by decreasing the hazardous air pollutants emitted to the atmosphere. Second, the definition in Section 61.02 excludes modifications for routine maintenance, repair, and replacement of equipment. Once these basic restrictions on possible modifications have been incorporated, the actual number of Section 61.02 modifications becomes quite small.

5.2.1 Process Modifications

The by-product coke industry is a mature industry with a mode of operation that has been developed by over 50 years of experience. It is unlikely that a new coking process will be commercially available within the next 10 years. Some companies have experimented with using inferior coking coals by either coal briquetting or formed coke processes, but large-scale commercial use of these is not expected in the near future.[2] Thus, any process modifications will be within the process description explained in Chapter 3.

5.2.1.1 Dry-Coal Charging. A modification to the charging operation would be the use of dry-coal charging. Dry charging may reduce emissions from the charging operation at the battery topside, but this reduction may be offset by an increase associated with the use of a coal preheater. Currently, 11 batteries in the United States use dry charging.[2] However, because EPA currently is developing separate air emission standards for dry charging, any modification that would use this process will be regulated by those specific standards.

5.2.1.2 Recycle of Waste. Because of the rapid volatilization of polycyclic organic material (POM), the addition of flushing-liquour sludge and/or coal tar to the coal mix for the coke ovens could increase the amount of POM released during charging. Data are not available to quantify the effect of this modification. (See Subsection 3.3.1.2.). Currently, one plant has indicated the possibility of adding flushing-liquor sludge to the coal mix. In the future, plants may incorporate this process for the ultimate disposal of various sludges that no

longer can be disposed of in a landfill because of the Resource Conservation and Recovery Act (RCRA). This process change might be considered a modification if it increased pollutant levels.

5.2.1.3 Green Coke. The production of green coke is undesirable and affects emissions during pushing. Several operational modifications to the coke ovens could increase the occurrence of green coke. Decreasing the coking time, overfilling the ovens, and lowering the heating value of the underfiring gas to the battery all could contribute to the coke not being fully carbonized. Green coke is not a desired product, so intentional process modifications to produce it are unlikely. However, any changes that increase the frequency of green coke production might be considered a modification.

5.2.2 Equipment Modifications

The recent trend in the by-product coke industry has been to make equipment modifications that decrease the pollutants from the affected facility in an attempt to meet existing standards. Combined with the definition of modification that excludes routine maintenance, repair, and replacement of equipment, essentially all rational equipment changes probably will not be considered modifications. Therefore, the following probably would not be classified as Section 61.02 modifications:

- Change in hopper size and independent control of coal flow and independently operated drop sleeves on the larry car.
- Addition of automatic lid lifters or access to the charging holes without moving the larry car.
- Addition of human-guided mechanical cleaners for goosenecks.
- Addition of jumper pipes that move with the larry car on batteries with only one collecting main.
- Increase of clearance between the coal bunkers and the battery to allow for volumetric hoopers.
- Complete repaving of the battery top and replacement of lid rings and lids.
- Replacement of gooseneck and pipes.

- Replacement of Corliss valves with Pullman dampers.
- Addition of second collecting mains to batteries with single collecting mains.
- Addition of mechanical scrapers and/or decarbonization air on the pusher ram.
- Installation of leveler bar smoke boot.
- Blueprinting of doors to restore the original specifications.
- Replacement of seals on doors as needed.
- Replacement of doors as needed.
- Replacement of refractory in oven walls where necessary.
- Modification of self-sealing Koppers doors by adding stop blocks and replacing plunger springs with a more temperature-resistant alloy.
- Replacement of cast iron jambs with ductile iron jambs.
- Replacement of original door seals with NiCuTi alloy seals.
- Modification of self-sealing Wilputte doors by adding stop blocks, replacing plunger springs with a more temperature-resistant alloy, and proving guide blocks.
- Modification of hand-luted doors by enlarging the door plug and replacing the jambs with ones that more easily accommodate luting.

If a plant has incorporated and then considers discontinuing any of the above modifications, a modification could occur if the plant does not install a device or practice that would produce an equal or lesser amount of emissions than the discontinued modifications.

Any discontinuance of a control or control technique without offsetting the increased emissions by implementing an alternate control technique would be considered a modification. For example, if a plant discontinued the use of a cokeside shed or door hoods with a wet electrostatic precipitator without offsetting increased emissions by decreasing door leaks, the change might be termed a modification.

5.2.2.1 Steam or Liquor Aspiration. Increasing the aspiration at the gooseneck to facilitate smokeless stage charging may inadvertantly affect the operation of the by-product recovery plant and the underfiring of the battery.[3] The by-product recovery plant may not be able to accommodate the additional load of gas or smoke, and additional oxygen may change the nature of the coal tar chemicals to a type that the recovery plant was not designed to process. The oven underfiring could be affected because the burners may not operate efficiently with the lower heating value gas that results from dilution by too much aspirated air. Oven temperatures will be lower and green coke will be produced. An optimum aspiration range exists for individual plants above and below which operation causes either charging problems or the above problems, which in turn could increase emissions.[4] Operation outside this optimum range might be considered a modification.

5.3 REFERENCES

1. U.S. Environmental Protection Agency. Code of Federal Regulations. Title 40, Chapter I. Subchapter A, Section 61.02.

2. Hogan, W. T., and F. T. Koebkle. Analysis of the U.S. Metallurgical Coke Industry. Industrial Economics Research Institute, Fordham University. (Prepared for U.S. Department of Commerce.) EDA Project 99-26-09886-10. October 1979.

3. Baldwin, V. H., and D. W. Coy. Study to Develop Retrofit Information and Other Data for Use in Setting Standards for Coke Oven Emissions. Research Triangle Institute. Research Triangle Park, N.C. (Prepared for IERL, EPA.) EPA Contract No. 68-02-2612, Task 39. March 1979.

4. Barnes, T. M., H. W. Lownie, Jr., and J. Varga, Jr. Control of Coke Oven Emissions. Ironmaking and Steelmaking (Quarterly). 3:157-186. 1975.

6. MODEL BATTERIES AND REGULATORY ALTERNATIVES

This chapter defines model batteries and alternative ways that EPA can regulate fugitive emissions from wet-coal charging, doors, lids, and offtakes of coke ovens. Regulatory alternatives are defined for these various courses of action and are characterized in terms of visible emission levels.

6.1 MODEL BATTERIES

Model batteries are parametric descriptions of both the types of batteries that exist and those which EPA judges may be constructed, modified, or reconstructed. Three model batteries which are representative of major types of coke ovens are defined for the purpose of estimating the emissions from coke ovens and the cost of control technology. These model batteries are presented in Table 6-1. The battery type and dimensions are important in describing the emissions and the emission control systems. For example, a battery with a single collecting main would require installation of either a jumper pipe or a second collecting main to obtain adequate oven aspiration for wet-coal charging. The oven height is important because the pressure at the bottom of the doors on the 6-meter ovens is expected to be greater than that on the smaller oven doors; therefore, door leak control may be more difficult on 6-meter ovens. Model Battery 3 not only represents the most recently constructed existing batteries, it also represents the type most likely to be constructed in the future (new sources). The environmental, economic, and energy impact analyses of each regulatory alternative are conducted by applying the regulatory alternatives to the model batteries (Chapters 7 and 8).

TABLE 6-1. MODEL BATTERIES

	Model battery[a]		
	1	2	3
Type of coke	Foundry	Metallurgical	Metallurgical
Cycle time (hr)	30	18	18
Ovens per battery[b]	23-80 (36)	15-118 (62)	56-87 (71)
Door height[b] (m)	3-5 (3.5)	3-5 (4.0)	(6.0)
Oven width (m)	0.44	0.44	0.47
Battery dimensions:			
Length[b] (m)	25.5-88.8 (40)	16.7-134.5 (70.7)	76.6-119.2 (97.3)
Width (m)	12.7	12.7	14.6
Height[b] (m)	8.1-10.0 (8.6)	8.1-10.9 (9.1)	(11.1)
Coal (Mg/oven)	14.5	16.3	31.8
Coal[b] (10^3 Mg/yr)	91-340 (152)	100-910 (492)	910-1,300 (1,100)
Coke[b] (10^3 Mg/yr)	68-240 (106)	73-640 (344)	640-910 (770)

[a]Model Batteries 1, 2, and 3 all represent existing batteries; in addition, Battery 3 represents new batteries. For charging, Battery 1 has a single collecting main, and Batteries 2 and 3 have double collecting mains.

[b]Numbers in parentheses are averages.

6.2 DEVELOPMENT OF REGULATORY ALTERNATIVES

6.2.1 Regulatory Alternatives

Regulatory alternatives are alternate courses of action that EPA could take to regulate emission sources. The regulatory alternatives for limiting emissions from wet-coal charging, doors, lids, and offtakes of coke ovens were formulated on the basis of the demonstrated performance of the control systems presented in Chapter 4. The stringency of these regulatory alternatives ranges from the control levels required by existing regulations to the best control levels observed at new or rebuilt batteries. A summary of the regulatory alternatives is presented in Table 6-2, and details are provided in the following sections.

6.2.1.1 Regulatory Alternative I. Regulatory Alternative I permits the coke oven batteries to operate without National Emission Standards for Hazardous Air Pollutants (NESHAP). Under this regulatory option, the coke oven batteries would be regulated by State and local regulations, OSHA coke oven regulations, and consent decrees negotiated on a plant-by-plant basis.

The visible emission limits associated with this regulatory alternative correspond to the baseline visible emission limits that were presented in Tables 3-15 through 3-18 (Chapter 3).

Currently, the least stringent emission limit for charging is 32 seconds per charge. The most common baseline regulation is an average of 19 seconds per charge and is in effect at 53 batteries (40 percent of total). The most stringent limit is 11 seconds per charge and is currently in effect at 12 batteries. The least stringent limit for door leaks is 16 PLD, which is in effect for two tall batteries in Ohio. Approximately 97 batteries (72 percent of total) have a limit of about 10 PLD. Exclusions of 2 to 4 leaking doors are granted to 70 of these batteries. The most stringent baseline limits for doors are 4 to 5 PLD and are required at 7 new or rebuilt batteries. The baseline for lid leaks ranges from 1 to 5 PLL with the majority of the batteries (63 percent) controlled at levels of 3 PLL or less. The limits for offtakes range from 4 to 10 PLO with 84 batteries at 10 PLO and 50 batteries at 5 PLO or less.

TABLE 6-2. SUMMARY OF REGULATORY ALTERNATIVES

Emission point	Regulatory alternative	Technology	Emission limit[a]
Charging	I	Stage charging	11 to 32 s/charge
	II	Optimized stage charging	16 s/charge[b]
	III	Rebuild batteries	11 s/charge
Doors	I	Leak control program	4 to 16 PLD
	II	Modified seals, inspect, clean, repair	10 PLD
	III	Rebuild batteries	5 PLD
Lids	I	Leak control program	1 to 5 PLL
	II	Luting manpower	3 PLL
	III	Rebuild batteries	1 PLL
Offtakes	I	Leak control program	4 to 10 PLO
	II	Luting manpower, repair slip joints	6 PLO
	III	Rebuild batteries	4 PLO

[a]PLD = Percent leaking doors.
PLL = Percent leaking lids.
PLO = Percent leaking offtakes.

[b]Log average of 10 charges.

The OSHA regulations[1] require implementation of stage charging with modified larry cars, adequate aspiration, and written operating procedures. In addition, the cost analysis of the OSHA regulation included estimates for replacing or resetting lid rings, repairing the battery top, realigning tracks, adding steam lines, nozzles, jumper pipes, leveler bar seals, and decarbonizing equipment, and straightening and cleaning standpipes. For door leaks, OSHA requires a corrective action program of inspection, cleaning, and repair or replacement of damaged doors and seals. Door repair facilities, an adequate number of spare doors, and chuck door gaskets are also required. Topside leak regulation requirements include regular inspection and maintenance, luting repairs, and prevention of miscellaneous topside leaks.[1]

6.2.1.2 Regulatory Alternative II. Regulatory Alternative II represents application of the control technology discussed in Chapter 4. The control technology for wet-coal charging is optimized stage charging, which includes an engineering study, optimization of the operating procedure, extensive worker training, visible emission observers, and minor equipment changes. This technology has been implemented by CF&I and U.S. Steel, Clairton; the results are listed in Table 4-4 (Chapter 4). At these plants, the battery with the highest log average of charging emissions (Battery 11 at Clairton) would meet a limit of a log average of 16 seconds per charge at the 95-percent confidence level when averaged over 10 charges. In addition, no more than 1 charge in 10 can exceed 45 seconds in duration. An emission limit based on the 95-percent confidence level from the worst case means that all of the batteries in the data base could meet the limit at least 95 percent of the time. The limit also means that there is only a 5-percent probability of citing a battery in violation when it is actually controlling emissions as effectively as the batteries in the data base.

Data in Table 4-4 also show that other battery types can meet a log average of 16 seconds per charge. These 25 batteries have the following characteristics: 3- to 6-meter ovens; single and double mains; old, new, and rebuilt status; three or four charging holes; a variety of oven manufacturers; different geographical locations;

gravity or mechanical feed; manual or automatic lid lifters; inspections during different times of the year; different coking coal sources; and a range of coal sizes.

A comparison of log and arithmetic averages is necessary because existing regulations use arithmetic averages. A precise arithmetic average cannot be determined from a log average; however, the log average is always less than or equal to the arithmetic average. Therefore, a log average of 16 seconds indicates an arithmetic average of at least 16 seconds. The charging data base shows that some data sets have arithmetic averages that are 5 or 6 seconds higher than the log average. Analysis of charging data indicates that the current Pennsylvania standard (75 seconds for four charges) is probably equal to or more stringent than a log average limit of 16 seconds per charge. It is estimated that 80 batteries (60 percent of the total) have current regulations that are as stringent as the log average limit, and 54 batteries have existing regulations that are less stringent.

Regulatory Alternative II for door leaks is based on implementation of the basic door leak control program required by OSHA and installation of temperature-resistent door seals that are more durable than those used currently on most batteries. This technology has been demonstrated by CF&I and U.S. Steel, Clairton. The discussion in Chapter 4 showed that batteries at these plants could achieve average performance levels of 7 PLD or less with a 95-percent confidence level of 10 PLD when averaged over three runs. The 20 batteries in the door leak data base also include a rebuilt battery (Battery 9 at U.S. Steel, Fairfield) and two 6-meter batteries (Battery 2 at U.S. Steel, Fairfield, and Battery 1 at National Steel, Weirton).

A total of 30 batteries have existing limits greater than 10 PLD, 20 batteries have a limit of 10 PLD excluding 4 doors, and 50 batteries have a limit of 10 PLD excluding 2 doors. A total of 34 batteries have current limits of 10 PLD or less. This alternative would have the most significant impact on the 30 batteries with limits greater than 10 PLD. The impacts on batteries with 10 PLD limits and 2 to 4 doors excluded would be minor compared to the impacts for batteries with higher limits.

Regulatory Alternative II for topside leaks represents sealing with luting material, additional topside labor, and modification or replacement of offtakes on some batteries. Table 4-15 (Chapter 4) shows 22 batteries that average 1.8 PLL or less with a 95-percent confidence level of 3 PLL or less (averaged over three runs). Table 4-16 (Chapter 4) lists 15 batteries that averaged 3.5 PLO or less with a 95-percent confidence level of 6 PLO or less (averaged over three runs). These topside leak limits require conscientious luting of lids and standpipe caps after charging and reluting whenever topside leaks are observed.

Approximately 84 batteries (63 percent of total) have existing limits of 3 PLL or less. Consequently, this alternative would affect only 50 batteries with limits of 4 to 5 PLL. A total of 84 batteries have limits of 10 PLO and 50 batteries have limits of 5 PLO or less. Regulatory Alternative II for offtake leaks would affect only those batteries with a current limit of 10 PLO.

6.2.1.3 Regulatory Alternative III. Regulatory Alternative III was developed as a more stringent alternative than Regulatory Alternative II. This alternative is based on Lowest Achievable Emission Rate (LAER) limits that have been applied to new and rebuilt batteries. This alternative could require the extensive rebuilding of the industry's existing batteries. In addition, the limits are difficult for some rebuilt batteries to meet and no technology, short of continual rebuilding, could be identified that would allow new batteries to continue to meet the limits as they age.

Regulatory Alternative III would impose a limit of 11 seconds per charge for 10 consecutive charges. Currently 12 new or rebuilt batteries have existing regulations as stringent as 11 seconds per charge. For door leaks, this alternative would impose a limit of 5 PLD. Currently, only 7 new or rebuilt batteries have existing limits of 5 PLD or less. The limit for lid leaks would be 1 PLL, which is currently in effect at 6 batteries. Offtake leaks would be controlled to 4 PLO, which is currently required at 13 batteries.

6.2.2 Alternative Control Technologies

Some technologies that are capable of controlling charging and door leak emissions were not chosen as regulatory alternatives. The alternative control technologies for wet-coal charging included sequential charging and larry-car-mounted scrubber systems. These technologies were not chosen as bases for regulatory alternatives because they were judged to be less capable than stage charging and optimized stage charging for controlling emissions. None of the regulatory alternatives precludes use of an alternate technology, provided that the coke oven batteries attain the visible emission limits specified in the alternatives.

The door leak control technologies, which were discussed in Chapter 4, include Ikio seals, the Battelle (EPA-AISI) seal, Nippon gas seal, prechamber doors, and door hoods. These technologies were not considered as bases for regulatory alternatives because it has not been demonstrated that they are superior to the control technology of modified seals coupled with a door leak control program. Cokeside sheds with control devices, such as scrubbers or electrostatic precipitators, also were discussed as possible controls for door leak emissions. However, sheds with pollution control devices have been designed primarily for control of particulate emissions from the pushing operation. Most batteries do not use sheds to control pushing emissions, and other types of pushing controls do not collect and remove door leak emissions. Cokeside sheds were not considered as a basis for a regulatory alternative for door leaks because they are much more expensive than modified seals coupled with the door leak control program, and sheds have not been shown to be significantly more effective. For example, the shed's control device may not remove gaseous pollutants (such as benzene and sulfur oxides) that are contained within the by-product recovery system by a door leak control program. In addition, the removal efficiency for the different compounds in the BSO fraction may vary with the compound. The shed's capture efficiency may also be variable and will depend upon the design, construction, and operational characteristics; the extent and location of emissions; and meteorological conditions, such as wind speed and direction.

6.3 REFERENCES

1. 41 Federal Register 46785, 46786. October 22, 1976.

7. ENVIRONMENTAL IMPACT

This chapter presents the environmental impacts that will result from additional control of coke oven emissions for the Regulatory Alternatives described in Chapter 6. The primary impact directly attributable to emission control is a reduction in atmospheric emissions of benzene soluble organics (BSO) from coke ovens. The estimated emission rates generated in this chapter are used in the Human Exposure Model (HEM) to predict ambient BSO concentrations around coke plants. The HEM couples the predicted concentrations with the population exposed to the BSO emissions and the unit risk factor for BSO to predict annual incidence and maximum lifetime risk. The dispersion modeling and health impact analysis are discussed in Appendix E.

Other impacts, such as water pollution, solid waste disposal, and energy consumption, were also examined. The additional control of emissions is accomplished by preventing leaks and containing potential emissions within the by-product collection system. Consequently, no significant impacts on water pollution, solid waste disposal, or energy usage are expected for additional control of coke oven emissions from charging or leaking doors, lids, and offtakes.

7.1 EMISSION RATE ESTIMATES

The emission estimates for batteries at their current level of control are based on the current visible emission limits in effect from existing State regulations and consent decrees. The existing emission limits for each source at each battery were summarized in Chapter 3. For a battery to meet the limit a high percentage of the time, the battery's average performance must be less than the limit.

The charging data base was examined to develop an empirical correlation between the charging emission limits and an overall logarithmic average performance. The data base included 528 observations at 15 batteries. The results are listed in Table 7-1 as the estimated log performance that would be required to meet the emission limit approximately 95 percent of the time. For example, a log average performance of about 17 seconds per charge would be required to meet arithmetic limits of 32 seconds per charge or 25 seconds per charge with the highest observation in 20 excluded. The table indicates that requiring a log average of 16 seconds per charge maximum is roughly equivalent to a limit of 20 seconds per charge as an arithmetic average because both have an estimated average performance of 10 seconds per charge.

The emission rates in grams of BSO per charge are based on the estimates given in Chapter 3 and the estimated average performance. The minimum emission estimate from Chapter 3 is 0.006 g BSO/s and represents the unusually well-controlled case with only small puffs of emissions from a single opening for every charge. Although theoretically achievable, this level of emissions probably underestimates actual charging emissions significantly; however, this approach should provide a reasonable lower bound for the charging emission estimate. The grams of BSO per charge (minimum) is estimated by multiplying the average performance by 0.006 g/s (e.g., 17 s/charge × 0.006 g/s = 0.102 g/charge).

The upper bound estimate is based on an assumed exponential reduction in emissions as visible emissions decrease (exponent = 2). The emission estimates are given in Table 3-6. These estimates from the exponential model should provide a reasonable upper bound for well-controlled emissions. However, for relatively dense emissions or emissions that are long in duration, the linear model discussed in Chapter 3 may be more appropriate and emissions would be higher than those estimated from the exponential model. Consequently, the maximum estimate for charging does not represent a worst-case estimate and is more typical of a consistently controlled battery that does not

TABLE 7-1. CHARGING BASELINE LIMITS AND ESTIMATED EMISSION RATES

Charging emission limit (s/charge)	Estimated average (s/charge)	BSO per charge (g)	
		Minimum[a]	Maximum[b]
32	17	0.102	24
30 (-1/20)[c]	24	0.144	48
25 (-1/20)	17	0.102	24
25	13	0.078	14
24	12	0.072	12
20	10	0.060	8.3
19	9.3	0.056	7.2
12	5.6	0.034	2.6
11	5.0	0.030	2.1
16 (log)[d]	10	0.060	8.3

[a]Minimum = (average s/charge) × 0.006 g/s.

[b]Maximum = (average s/charge/300)^2 × 7,500.

[c](-1/20) = Excludes highest observation in 20.

[d]Logarithmic average of 16. All others are arithmetic averages.

experience the dense emissions often seen with charges that exceed 25 seconds of emissions.

The emission estimates are given in grams of BSO per charge. To estimate annual emissions, the grams/charge is multiplied by the number of charges per year.

The baseline regulations for percent leaking doors (PLD) are summarized in Table 7-2. The average performance was determined from the statistical analysis of the Poisson distribution and represents the average required to meet the limit roughly 95 percent of the time. The leak rates are based on the exponential models described in Chapter 3 and the results listed in Table 3-12. For comparison, consider that a simulated plume that was 1 to 2 meters in length yielded a measured emission rate of 0.021 kg/hr. Door leaks may have multiple plumes from a single door, and the plume may exceed 1 to 2 meters in length. Because the minimum and maximum estimates include the measured plume rate of 0.021 kg/hr, the estimates in Table 7-2 may be slightly low. Another factor that indicates the estimates may be low is that the data from measurement of captured door leaks on poorly controlled doors ranged from 0.1 to 0.7 kg/hr. The lower estimates in Table 7-2 result from the exponential door leak model that predicts much lower emission rates because of smaller gap sizes. For doors that are leaking heavily, such as doors under a cokeside shed where the measured data were collected, an estimated rate of 0.1 to 0.7 kg/hr per leak may be more appropriate. For doors that are consistently controlled around 10 PLD without any heavy plumes, the leak rates in Table 7-2 should provide reasonable bounds on the emission estimates.

The emission limits and estimated average performance for percent leaking lids (PLL) and percent leaking offtakes (PLO) are summarized in Table 7-3. The minimum and maximum emission rates per leak were derived from the capture and measurement of simulated leaks on the topside of a battery. The minimum estimate of 0.0033 kg/hr was the average rate measured for a plume ~0.3 meters in length and should be representative of the small wisps seen from lid leaks. The maximum rate of 0.021 kg/hr was for a plume that was 1 to 2 meters in length

TABLE 7-2. DOOR LEAK BASELINE LIMITS AND ESTIMATED EMISSION RATES

Door limit (PLD)	Estimated average (PLD)	BSO/hr per leak (kg)	
		Minimum[a]	Maximum[b]
16	12.1	0.0137	0.153
15	11.3	0.0123	0.138
12 (-2)[c]	10.2	0.0106	0.118
12	8.8	0.0085	0.095
10 (-4)[d]	10.0	0.0103	0.115
10 (-2)	8.6	0.0082	0.0916
10	7.2	0.0063	0.0702
5	3.3	0.0019	0.0218
4	2.6	0.0014	0.0152

[a]Minimum = (average PLD/70)$^{1.5}$ × 0.19

[b]Maximum = 11.2 × minimum.

[c](-2) = Excludes 2 doors.

[d](-4) = Excludes 4 doors.

TABLE 7-3. LID AND OFFTAKE LEAK BASELINE LIMITS AND ESTIMATED EMISSION RATES

Lid limit (PLL)	Estimated average[a] (PLL)	Offtake limit (PLO)	Estimated average[a] (PLO)
5	3.5	10	6.5
4	2.6	6	3.5
3	1.9	5	2.9
2	1.1	4	2.2
1	0.6		

[a]The minimum estimated emission rate is 0.0033 kg/hr per leak.
The maximum estimated emission rate is 0.021 kg/hr per leak.

and may be more representative of a large leak from an offtake. The rates assume one leak per source; consequently, these emission rates would underestimate the emissions from multiple leaks on a single lid or offtake.

The average performance levels and emission rates in Tables 7-1, 7-2, and 7-3 are used to estimate the current (baseline) emissions. The emission rates for Regulatory Alternative II are estimated from the performance levels achieved by the improved control technology implemented at CF&I and U.S. Steel's Clairton Works. The description of control technology and the associated performance levels are provided in Chapter 4. The upper limits, average performance, and estimated emission rates are summarized in Table 7-4 for each source. Emission estimates for Regulatory Alternative II are based on the average performance and mass emission rates listed in Table 7-4. The upper limits, average performance, and estimated emission rates for Regulatory Alternative III are summarized in Table 7-5.

7.2 EMISSION ESTIMATES FOR MODEL BATTERIES

Model batteries were defined in Chapter 6 and will be used in this section to estimate emissions for the types of batteries commonly found in the industry. The characteristics of the model batteries are summarized in Table 7-6. Model Battery 1 is a small battery that produces foundry coke on a 30-hour cycle. This model has a single collecting main (one offtake per oven) and three lids per oven. Model Batteries 2 and 3 produce metallurgical coke on an 18-hour cycle. Both have double collecting mains and four lids per oven. Model Battery 2 is 4 meters in height and Model Battery 3 is 6 meters in height, which is characteristic of new batteries constructed in the past 10 to 15 years.

The current baseline limits shown in Table 7-6 were chosen to represent the least stringent baseline limits currently in effect. In this sense the model batteries represent those batteries that will be most affected by requiring improved emission control from a national standard. The average performance levels shown were obtained from Tables 7-1, 7-2, and 7-3 for the corresponding visible emission limits.

TABLE 7-4. DEMONSTRATED PERFORMANCE LEVELS[a] AND ESTIMATED EMISSION RATES FOR REGULATORY ALTERNATIVE II

Upper limit	Average performance	BSO emission rate
16 s/charge[b]	10 s/charge	0.06-8.3 g/charge
10 PLD	7.2 PLD	0.0063-0.0702 kg/hr per leak
3 PLL	1.9 PLL	0.0033-0.021 kg/hr per leak
6 PLO	3.5 PLO	0.0033-0.021 kg/hr per leak

[a]Performance levels demonstrated by CF&I and U.S. Steel's Clairton Works.

[b]Log average of 10 charges.

TABLE 7-5. EMISSION LIMITS AND ESTIMATED EMISSION RATES FOR REGULATORY ALTERNATIVE III

Upper limit	Average performance	BSO emission rate
11 s/charge	5.0 s/charge	0.03-2.1 g/charge
5 PLD	3.3 PLD	0.0019-0.0218 kg/hr per leak
1 PLL	0.6 PLL	0.0033-0.021 kg/hr per leak
4 PLO	2.2 PLO	0.0033-0.021 kg/hr per leak

TABLE 7-6. MODEL BATTERY CHARACTERISTICS

Item	Model batteries 1[a]	2	3
Capacity (1,000 Mg/yr)	106	344	770
No. ovens	36	62	71
Cycle time (hr)	30	18	18
Hours/yr[b]	7,880	7,880	7,880
Charges/yr[c]	9,460	27,100	31,100
No. doors	72	124	142
No. lids	108[d]	248[e]	284[e]
No. offtakes	36[f]	124[g]	142[g]
Current limits			
s/charge	25(-1/20)[h]	25(-1/20)	25(-1/20)
PLD	15	15	16
PLL	5	5	5
PLO	10	10	10
Average performance[i]			
s/charge	17	17	17
PLD	11.3	11.3	12.1
PLL	3.5	3.5	3.5
PLO	6.5	6.5	6.5
No. of leaks[j]			
Doors	8.1	14	17
Lids	3.8	8.7	9.9
Offtakes	2.3	8.1	9.2

[a]Model Battery 1 is a foundry coke battery while Models 2 and 3 are metallurgical coke batteries.

[b]Assumes in operation 90 percent of the time (365 × 24 × 0.9).

[c]Charges/yr = No. ovens ÷ cycle time × 7,880.

[d]Three lids per oven.

[e]Four lids per oven.

[f]Single main.

[g]Double main.

[h](-1/20) = Excludes highest observation in 20.

[i]Estimated average performance required to meet the emission limit a high percentage of the time.

[j]Average leaking times number on battery (e.g., 11.3 percent of 72 doors = 8.1 leaking doors).

The number of charges per year were estimated from the number of ovens, cycle time, and average annual hours of operation. The battery is assumed to operate 90 percent of the time and the balance is lost time or down time. This is equivalent to assuming that at any given time 10 percent of the ovens are out of service for repairs. The average number of leaks was estimated by multiplying the average percent leaking by the total number on the battery.

The emissions are estimated for the model batteries for each regulatory alternative in Tables 7-7 and 7-8. For charging, the estimates for Model Battery 1 are calculated from the number of charges times the g BSO/charge (from Table 7-1):

$$9{,}460 \text{ charges/yr} \times 0.102 \text{ g/charge} \times 10^{-3} \text{ kg/g} = 1.0 \text{ kg/yr}$$

$$9{,}460 \text{ charges/yr} \times 24 \text{ g/charge} \times 10^{-3} \text{ kg/g} = 230 \text{ kg/yr}.$$

For door leaks, the estimates are based on the number of leaks and the estimated leak rate. For Model Battery 1 with 8.1 door leaks, the estimated leak rate is 0.0123 to 0.138 kg/hr. The calculation for Model Battery 1 is:

$$8.1 \text{ leaks} \times 0.0123 \text{ kg/hr} \times 7{,}880 \text{ hr/yr} = 790 \text{ kg/yr}$$

$$8.1 \text{ leaks} \times 0.138 \text{ kg/hr} \times 7{,}880 \text{ hr/yr} = 8{,}800 \text{ kg/yr}.$$

The calculations for emissions from lid and offtake leaks are based on the number of leaks and an emission rate of 0.0033 to 0.021 kg/hr per leak. A sample calculation for lid leaks on Model Battery 1 is:

$$3.8 \text{ leaks} \times 0.0033 \text{ kg/hr} \times 7{,}880 \text{ hr/yr} = 100 \text{ kg/hr}$$

$$3.8 \text{ leaks} \times 0.021 \text{ kg/hr} \times 7{,}880 \text{ hr/yr} = 630 \text{ kg/yr}.$$

The Regulatory Alternative II emission estimates are based upon control performance improved to the levels summarized in Table 7-4 with average performance levels of 10 seconds per charge, 7.2 PLD, 1.9 PLL, and 3.5 PLO. These average performance levels correspond to the levels achieved by the control technology implemented at CF&I and U.S. Steel's Clairton Works. Emissions were estimated in the same manner described previously

TABLE 7-7. EMISSION ESTIMATES FOR THE MODEL BATTERIES FOR THE BASELINE AND REGULATORY ALTERNATIVE II

Item	Model batteries 1	2	3
Baseline emission (kg/yr)[a]			
Charging	115 (1.0-230)	330 (2.8-650)	380 (3.2-750)
Doors	4,800 (790-8,800)	8,200 (1,400-15,000)	10,300 (1,700-19,000)
Lids	360 (100-630)	820 (230-1,400)	930 (260-1,600)
Offtakes	220 (60-380)	760 (210-1,300)	870 (240-1,500)
Total	5,500 (950-10,000)	10,000 (1,800-18,000)	12,000 (2,200-23,000)
kg/Mg coke	0.052	0.029	0.016
lb/ton coke	0.10	0.058	0.032
Regulatory Alternative II emissions (kg/yr)[a,b]			
Charging	40 (0.6-79)	110 (1.6-230)	130 (1.9-260)
Doors	1,600 (260-2,900)	2,700 (440-4,900)	3,100 (500-5,600)
Lids	200 (53-340)	450 (120-780)	520 (140-890)
Offtakes	120 (33-210)	420 (110-720)	480 (130-820)
Total	2,000 (350-3,500)	3,700 (670-6,600)	4,200 (770-7,600)
kg/Mg coke	0.019	0.011	0.0055
lb/ton coke	0.038	0.022	0.010
Percent reduction			
Charging	65	67	67
Doors	67	67	70
Lids	44	45	44
Offtakes	45	45	45
Total	64	63	65

[a]Midrange estimate followed by minimum and maximum estimates in parentheses.

[b]Emissions for limits of 16 s/charge, 10 PLD, 3 PLL, and 6 PLO.

TABLE 7-8. REGULATORY ALTERNATIVE III EMISSION ESTIMATES FOR THE MODEL BATTERIES[a]

Item	Model batteries emissions (kg/yr)[b] 1	2	3
Charging	10 (0.28-20)	29 (0.81-57)	33 (0.93-65)
Doors	220 (36-410)	380 (61-700)	440 (70-800)
Lids	64 (17-110)	140 (39-250)	160 (44-280)
Offtakes	76 (21-130)	260 (71-450)	300 (81-520)
Total	390 (80-710)	900 (190-1,600)	1,000 (230-1,800)
kg/Mg coke	0.0037	0.0026	0.0013
lb/t coke	0.0074	0.0052	0.0026
Percent reduction			
Charging	91	91	91
Doors	95	95	96
Lids	82	83	83
Offtakes	65	66	66
Total	93	91	92

[a]For emission limits of 11 seconds per charge, 5 PLD, 1 PLL, and 4 PLO.

[b]Midrange estimate followed by minimum and maximum estimates in parentheses.

for the baseline case by substituting the reduced average performance level, number of leaks, and the leak rate for those used in the baseline estimate.

The estimates for Regulatory Alternative III in Table 7-8 were derived in a similar manner. The average performance levels and emission rates in Table 7-5 were used with the model battery characteristics (from Table 7-6) to estimate emissions from the model batteries.

7.3 ESTIMATES OF NATIONWIDE EMISSIONS

Emission estimates were generated for each battery and are based on the battery's specific characteristics and the visible emission limit currently in effect. The data for the number of ovens, doors, lids, and offtakes are summarized in Table 7-9. A cycle time of 30 hours was used for foundry coke producers and 18 hours was used for metallurgical coke producers. The estimated average performance for each battery is given in Table 7-10 and is based on the estimated performance required to meet the baseline limit a high percentage of the time (approximately 95 percent).

For charging, the baseline emission estimate for each battery is based on the number of charges per year (number of ovens/cycle time × 7,880 hr/yr) multiplied by the grams of BSO per charge. An example calculation is provided below for Battery A at Plant 1 in Tables 7-9 and 7-10:

Charges/yr = 78/30 × 7,880 = 20,500

Average = 9.3 seconds per charge

g BSO/charge = 0.056-7.2 (from Table 7-1)

Midrange = 3.6 grams per charge

Midrange emissions = $20,500 \times 3.6 \times 10^{-3} = 74$ kg/yr

The emission estimates for door leaks are based on the estimated number of doors leaking on each battery and the range of leak rates given in Table 7-2. For Battery A at Plant 1, an average of 17.6 doors leaks result from an average control level of 11.3 PLD for 156

TABLE 7-9. BATTERY CHARACTERISTICS

No.	Plant	Battery No.	Status	No. of Ovens	Cycle Time (hr)	No. of Doors	No. of Lids	No. of Offtakes
1	AL Byproducts, Tarrant, AL	A	0	78	30	156	234	78
		5	1	25	30	50	100	25
		6	0	29	30	58	116	29
2	Empire Coke, Holt, AL	1	0	20	30	40	60	20
		2	0	40	30	80	120	40
3	Koppers, Woodward, AL	1	0	60	24	120	180	120
		2A	0	38	24	76	114	78
		2B	0	40	24	80	120	40
		4	0	58	24	116	174	58
		5	0	30	24	60	90	30
4	LTV Steel, Gadsden,AL	2	0	65	18	130	260	65
		3	0	65	18	130	260	65
5	LTV Steel, Thomas,AL	1	2	65	18	130	260	65
6	Jim Walters, Birmingham, AL	3	0	30	30	60	120	30
		4	0	30	30	60	120	30
		5	0	60	30	120	240	60
7	U.S. Steel, Fairfield, AL	2	2	57	18	114	228	114
		5	2	77	18	154	308	72
		6	2	77	18	154	308	72
		9	2	63	18	126	252	63
8	National Steel, Granite City, IL	A	0	45	18	90	180	90
		B	0	45	18	90	180	90
		C	3	47	18	94	188	94
9	Interlake, Chicago, IL	1	0	50	18	100	150	50
		2	0	50	18	100	150	50
10	LTV Steel,So.Chicago,IL	2	0	60	18	120	240	60
11	Bethlehem Steel, Burns Harbor, IN	1	0	82	18	164	328	82
		2	0	82	18	164	328	164
12	Citizens Gas, Indianapolis, IN	E	0	47	30	94	188	47
		H	0	41	30	82	164	41
		I	0	72	30	144	216	144
13	IN Gas, Terre Haute, IN	1	0	30	30	60	90	60
		2	0	30	30	60	90	60
14	Inland Steel, E. Chicago, IN	6	0	65	18	130	260	65
		7	0	87	18	174	348	87
		8	0	87	18	174	348	87
		9	0	87	18	174	348	87
		10	0	51	18	102	153	51
15	U.S. Steel, Gary, IN	1	2	85	18	170	340	170
		5	1	77	18	154	231	154
		7	1	77	18	154	231	154
		13	1	77	18	154	231	154
		15	0	77	18	154	231	77
		16	1	77	18	150	231	77
16	LTV Steel, E.Chicago,IN	4	2	75	18	150	300	75
		9	2	87	18	174	348	87

(continued)

TABLE 7-9. (continued)

No.	Plant	Battery No.	Status	No. of Ovens	Cycle Time (hr)	No. of Doors	No. of Lids	No. of Offtakes
17	Armco Inc.,Ashland,KY	3	0	76	18	152	228	76
		4	0	70	18	140	280	140
18	Bethlehem Steel,Sparrows Pt., MD	1	1	63	18	126	189	63
		2	1	60	18	120	180	63
		3	2	63	18	126	189	63
		4	2	63	18	126	189	63
		5	2	63	18	126	189	63
		6	2	63	18	126	189	63
		11	0	65	18	130	260	130
		12	0	65	18	130	260	65
		A	0	80	18	160	320	160
19	Rouge Steel,Dearborn,MI	A	0	45	18	90	135	90
		Ax	0	10	18	20	30	20
		B	0	55	18	110	165	110
		Dx	0	27	18	54	81	54
20	National Steel, Detroit, MI	4	0	78	18	156	234	156
		5	0	85	18	170	340	85
21	Carondolet, St. Louis, MO	1	0	40	30	80	160	40
		2	0	18	30	36	72	18
		3	0	35	30	70	140	35
22	Tonawanda, Buffalo, NY	1	0	60	30	120	180	60
23	Bethlehem Steel, Lackawanna, NY	7	0	76	18	152	228	76
		8	0	76	18	152	228	76
		9	0	73	18	146	292	73
24	LTV Steel,Warren,OH	4	0	85	18	170	255	170
25	Armco Inc., Middletown,OH	1	0	57	18	114	228	114
		2	0	57	18	114	228	114
		4	0	76	18	152	228	152
26	New Boston, Portsmouth, OH	1	0	70	30	140	210	70
27	Koppers, Toledo, OH	C	0	57	30	114	171	57
28	LTV Steel, Cleveland,OH	1	0	51	18	102	153	51
		2	0	51	18	102	153	51
		3	0	51	18	102	153	51
		4	2	51	18	102	153	51
		6	0	63	18	126	189	63
		7	0	63	18	126	189	63
29	U.S. Steel, Lorain, OH	D	2	59	18	118	177	118
		G	2	59	18	118	177	59
		H	2	59	18	118	177	59
		I	2	59	18	118	177	59
		J	2	59	18	118	177	59
		K	2	59	18	118	177	59
		L	2	59	18	118	177	59
30	AL Byproducts,Keystone,PA	3	2	55	30	110	220	55
		4	2	55	30	110	220	55

(continued)

TABLE 7-9. (continued)

No.	Plant	Battery No.	Status	No. of Ovens	Cycle Time (hr)	No. of Doors	No. of Lids	No. of Offtakes
31	Bethlehem Steel, Bethlehem, PA	A	0	80	18	160	320	160
		2	0	102	18	204	510	102
		3	0	102	18	204	510	102
		5	0	80	18	160	320	80
32	LTV Steel, Aliquippa,PA	A1	0	106	18	212	318	106
33	LTV Steel, Pittsburgh,PA	P1	0	59	18	118	177	59
		P2	0	59	18	118	177	59
		P3N	0	59	18	118	177	59
		P3S	0	59	18	118	177	59
		P4	0	59	18	118	177	59
34	Koppers, Erie, PA	A	0	23	30	46	92	23
		B	0	35	30	70	140	35
35	Shenango, Pittsburgh, PA	1	0	56	30	112	168	112
		4	0	35	30	70	105	70
36	U.S. Steel, Clairton, PA	1	1	64	18	128	256	128
		2	1	64	18	128	256	128
		3	1	64	18	128	256	128
		7	1	64	18	128	256	128
		8	1	64	18	128	256	128
		9	1	64	18	128	256	128
		15	1	61	18	122	244	122
		19	0	87	18	174	348	174
		20	0	87	18	174	348	174
		21	0	86	18	172	344	172
		22	0	87	18	174	348	174
		B	0	75	18	150	300	150
37	U.S. Steel, Fairless Hills, PA	1	2	82	18	164	246	164
		2	2	82	18	164	246	164
38	Wheeling-Pitt, Monessen, PA	1A	2	37	18	74	111	37
		1B	0	37	18	74	148	74
		2	0	19	18	38	76	38
39	Chattanooga Coke, Chattanooga, TN	1	0	24	30	48	72	24
		2	0	20	30	40	60	20
40	Lone Star Steel, Lone Star, TX	C	0	70	18	140	280	140
41	U.S. Steel, Provo, UT	1	0	63	18	126	189	126
		2	0	63	18	126	189	126
		3	0	63	18	126	189	126
		4	0	63	18	126	189	126
42	Weirton Steel, Brown's Is.,WV	1	2	87	18	174	348	174
43	Wheeling-Pitt, E.Steubenville,WV	1	0	47	18	94	188	47
		2	0	47	18	94	188	47
		3	0	51	18	102	204	51
		8	0	79	18	158	316	158

Status
0=online
1=hot idle
2=cold idle
3=under construction

TABLE 7-10. ESTIMATED AVERAGE VISIBLE EMISSIONS

No.	Plant	Battery No.	Status	Average Baseline Emissions Level			
				s/chg	PLO	PLL	PLO
1	AL Byproducts, Tarrant, AL	A	0	9.3	11.3	3.5	6.5
		5	1	9.3	11.3	3.5	6.5
		6	0	9.3	11.3	3.5	6.5
2	Empire Coke, Holt, AL	1	0	9.3	11.3	3.5	6.5
		2	0	9.3	11.3	3.5	6.5
3	Koppers, Woodward, AL	1	0	9.3	11.3	3.5	6.5
		2A	0	9.3	11.3	3.5	6.5
		2B	0	9.3	11.3	3.5	6.5
		4	0	9.3	11.3	3.5	6.5
		5	0	9.3	11.3	3.5	6.5
4	LTV Steel, Gadsden,AL	2	0	9.3	11.3	3.5	6.5
		3	0	9.3	11.3	3.5	6.5
5	LTV Steel, Thomas,AL	1	2	9.3	11.3	3.5	6.5
6	Jim Walters, Birmingham, AL	3	0	9.3	11.3	3.5	6.5
		4	0	9.3	11.3	3.5	6.5
		5	0	9.3	11.3	3.5	6.5
7	U.S. Steel, Fairfield, AL	2	2	5.0	7.2	1.1	2.9
		5	2	9.3	11.3	3.5	6.5
		6	2	9.3	11.3	3.5	6.5
		9	2	5.0	3.3	0.6	2.2
8	National Steel, Granite City, IL	A	0	5.0	7.2	3.5	6.5
		B	0	5.0	7.2	3.5	6.5
		C	3	5.0	7.2	3.5	6.5
9	Interlake, Chicago, IL	1	0	17.0	7.2	3.5	6.5
		2	0	17.0	7.2	3.5	6.5
10	LTV Steel,So.Chicago,IL	2	0	5.0	7.2	3.5	6.5
11	Bethlehem Steel, Burns Harbor, IN	1	0	17.0	10.0	1.9	6.5
		2	0	17.0	10.0	1.9	6.5
12	Citizens Gas, Indianapolis, IN	E	0	17.0	10.0	1.9	6.5
		H	0	17.0	10.0	1.9	6.5
		I	0	17.0	10.0	1.9	6.5
13	IN Gas, Terre Haute, IN	1	0	17.0	10.0	1.9	6.5
		2	0	17.0	10.0	1.9	6.5
14	Inland Steel, E. Chicago, IN	6	0	17.0	10.0	1.9	6.5
		7	0	17.0	10.0	1.9	6.5
		8	0	17.0	10.0	1.9	6.5
		9	0	17.0	10.0	1.9	6.5
		10	0	17.0	10.0	1.9	6.5
15	U.S. Steel, Gary, IN	1	2	17.0	10.0	1.9	6.5
		5	1	17.0	10.0	1.9	6.5
		7	1	17.0	10.0	1.9	6.5
		13	1	17.0	10.0	1.9	6.5
		15	0	17.0	10.0	1.9	6.5
		16	1	17.0	10.0	1.9	6.5
16	LTV Steel, E.Chicago,IN	4	2	17.0	10.0	1.9	6.5
		9	2	17.0	10.0	1.9	6.5

(continued)

TABLE 7-10. (continued)

No.	Plant	Battery No.	Status	Average Baseline Emissions Level			
				s/chg	PLO	PLL	PLO
17	Armco Inc.,Ashland,KY	3	0	13.0	7.2	3.5	6.5
		4	0	5.0	7.2	3.5	6.5
18	Bethlehem Steel,Sparrows Pt., MD	1	1	17.0	7.2	1.9	6.5
		2	1	17.0	7.2	1.9	6.5
		3	2	17.0	7.2	1.9	6.5
		4	2	17.0	7.2	1.9	6.5
		5	2	17.0	7.2	1.9	6.5
		6	2	17.0	7.2	1.9	6.5
		11	0	17.0	7.2	1.9	6.5
		12	0	17.0	7.2	1.9	6.5
		A	0	5.0	3.3	0.6	2.2
19	Rouge Steel,Dearborn,MI	A	0	10.0	7.2	2.6	3.0
		Ax	0	10.0	7.2	2.6	3.0
		B	0	10.0	7.2	2.6	3.0
		Dx	0	10.0	7.2	2.6	3.0
20	National Steel, Detroit, MI	4	0	10.0	7.2	2.6	3.0
		5	0	10.0	8.8	2.6	3.0
21	Carondolet, St. Louis, MO	1	0	10.0	11.3	1.1	6.5
		2	0	10.0	11.3	1.1	6.5
		3	0	10.0	11.3	1.1	6.5
22	Tonawanda, Buffalo, NY	1	0	24.0	7.2	1.1	6.5
23	Bethlehem Steel, Lackawanna, NY	7	0	13.0	7.2	1.1	6.5
		8	0	13.0	7.2	1.1	6.5
		9	0	13.0	7.2	1.1	6.5
24	LTV Steel,Warren,OH	4	0	17.0	7.2	3.5	6.5
25	Armco Inc., Middletown,OH	1	0	17.0	12.1	3.5	6.5
		2	0	17.0	12.1	3.5	6.5
		4	0	17.0	8.6	3.5	6.5
26	New Boston, Portsmouth, OH	1	0	17.0	8.6	3.5	6.5
27	Koppers, Toledo, OH	C	0	17.0	8.6	3.5	6.5
28	LTV Steel, Cleveland,OH	1	0	5.6	8.6	1.1	2.9
		2	0	17.0	8.6	3.5	6.5
		3	0	17.0	8.6	3.5	6.5
		4	2	17.0	8.6	3.5	6.5
		6	0	10.0	8.6	3.5	2.9
		7	0	10.0	8.6	3.5	2.9
29	U.S. Steel, Lorain, OH	D	2	17.0	8.6	3.5	6.5
		G	2	17.0	8.6	3.5	6.5
		H	2	17.0	8.6	3.5	6.5
		I	2	17.0	8.6	3.5	6.5
		J	2	17.0	8.6	3.5	6.5
		K	2	17.0	8.6	3.5	6.5
		L	2	17.0	8.6	3.5	6.5
30	AL Byproducts,Keystone,PA	3	2	9.3	8.6	1.1	2.9
		4	2	9.3	8.6	1.1	2.9

(continued)

TABLE 7-10. (continued)

No.	Plant	Battery No.	Status	Average Baseline Emissions Level			
				s/chg	PLD	PLL	PLO
31	Bethlehem Steel, Bethlehem, PA	A	0	9.3	8.6	1.1	2.9
		2	0	9.3	8.6	1.1	2.9
		3	0	9.3	8.6	1.1	2.9
		5	0	9.3	8.6	1.1	2.9
32	LTV Steel, Aliquippa,PA	A1	0	9.3	8.6	1.1	2.9
33	LTV Steel, Pittsburgh,PA	P1	0	9.3	8.6	1.1	2.9
		P2	0	9.3	8.6	1.1	2.9
		P3N	0	9.3	8.6	1.1	2.9
		P3S	0	9.3	8.6	1.1	2.9
		P4	0	9.3	8.6	1.1	2.9
34	Koppers, Erie, PA	A	0	9.3	8.6	1.1	2.9
		B	0	9.3	8.6	1.1	2.9
35	Shenango, Pittsburgh, PA	1	0	5.0	3.3	0.6	2.2
		4	0	9.3	8.6	1.1	2.9
36	U.S. Steel, Clairton, PA	1	1	9.3	8.6	1.1	2.9
		2	1	9.3	8.6	1.1	2.9
		3	1	9.3	8.6	1.1	2.9
		7	1	9.3	8.6	1.1	2.9
		8	1	9.3	8.6	1.1	2.9
		9	1	9.3	8.6	1.1	2.9
		15	1	5.0	3.3	0.6	2.2
		19	0	9.3	8.6	1.1	2.9
		20	0	5.0	3.3	0.6	2.2
		21	0	9.3	8.6	1.1	2.9
		22	0	9.3	8.6	1.1	2.9
		B	0	5.0	3.3	0.6	2.2
37	U.S. Steel, Fairless Hills, PA	1	2	9.3	8.6	1.1	2.9
		2	2	9.3	8.6	1.1	2.9
38	Wheeling-Pitt, Monessen, PA	1A	2	9.3	8.6	1.1	2.9
		1B	0	9.3	8.6	1.1	2.9
		2	0	9.3	8.6	1.1	2.9
39	Chattanooga Coke, Chattanooga, TN	1	0	9.3	7.2	1.1	6.5
		2	0	9.3	7.2	1.1	6.5
40	Lone Star Steel, Lone Star, TX	C	0	5.6	2.6	1.1	2.2
41	U.S. Steel, Provo, UT	1	0	9.3	7.2	1.1	2.9
		2	0	9.3	7.2	1.1	2.9
		3	0	9.3	7.2	1.1	2.9
		4	0	9.3	7.2	1.1	2.9
42	Weirton Steel, Brown's Is.,WV	1	2	13.0	8.6	1.1	6.5
43	Wheeling-Pitt, E.Steubenville,WV	1	0	13.0	8.6	1.1	6.5
		2	0	13.0	8.6	1.1	6.5
		3	0	13.0	8.6	1.1	6.5
		8	0	13.0	8.6	1.1	6.5

Status
0=online
1=hot idle
2=cold idle
3=under construction

s/chg= seconds per charge.
PLD= percent leaking doors.
PLL= percent leaking lids.
PLO= percent leaking offtakes.

total doors. The emission rate for a level of 11.3 PLD was estimated as 0.0123 to 0.138 kg/hr per leak (Table 7-2). The midrange of the leak rate is 0.075 kg/hr. Annual emissions for Battery A are estimated as:

17.6 leaks × 0.075 kg/hr × 7,880 hr/yr = 10,400 kg/yr.

The procedure for estimating emissions from lids and offtakes was the same as the procedure for doors. The emission rates for topside leaks range from 0.0033 to 0.021 kg/hr per leak with a midrange estimate of 0.012 kg/hr. For Battery A, average levels of 3.5 PLL and 6.5 PLO yield 8.2 lid leaks and 5.1 offtake leaks. The midrange emission estimates for lids and offtakes are then calculated:

8.2 lid leaks × 0.012 kg/hr × 7,880 hr/yr = 780 kg/yr

5.1 offtake leaks × 0.012 kg/hr × 7,880 hr/yr = 480 kg/yr.

The results of the nationwide emission estimates for each battery are summarized in Table 7-11 with the midrange values given. Emission estimates were also generated for emission limits of 16 seconds per charge, 10 PLD, 3 PLL, and 6 PLO. The estimates of reduced emissions are based on an emission reduction at those batteries with current visible emission limits that are less stringent than 16 seconds per charge, 10 PLD, 3 PLL, and 6 PLO. No reduction in emissions from the baseline level was attributed to those batteries with current visible emission limits more stringent than those listed above.

The results of the battery-by-battery analysis are summarized in Table 7-12. Door leaks contribute about 82 percent of the baseline emissions of BSO followed by lids (8 percent), offtakes (7 percent), and charging (3 percent). The estimates for emission control improved to at least 16 seconds per charge, 10 PLD, 3 PLL, and 6 PLO (Regulatory Alternative II) on a nationwide basis are also given in Table 7-12. The midrange estimate of emissions is reduced from 719 Mg/yr at the baseline to 420 Mg/yr for improved control. Most of the 42-percent reduction in total emissions results from the 44-percent reduction in door leaks, which are the major emission source.

TABLE 7-11. BASELINE EMISSION ESTIMATES

No.	Plant	Battery No.	Status	Midrange Baseline Emissions (Mg/yr)			
				Charges	Doors	Lids	Offtakes
1	AL Byproducts, Tarrant, AL	A	0	0.0744	10.44	0.784	0.485
		5	1	0.0239	3.35	0.335	0.156
		6	0	0.0277	3.88	0.389	0.180
2	Empire Coke, Holt, AL	1	0	0.0191	2.68	0.201	0.124
		2	0	0.0382	5.35	0.402	0.249
3	Koppers, Woodward, AL	1	0	0.0716	8.03	0.603	0.747
		2A	0	0.0453	5.09	0.382	0.485
		2B	0	0.0477	5.35	0.402	0.249
		4	0	0.0692	7.76	0.583	0.361
		5	0	0.0358	4.02	0.302	0.187
4	LTV Steel, Gadsden,AL	2	0	0.1034	8.70	0.871	0.405
		3	0	0.1034	8.70	0.871	0.405
5	LTV Steel, Thomas,AL	1	2	0.1034	8.70	0.871	0.405
6	Jim Walters, Birmingham, AL	3	0	0.0286	4.02	0.402	0.187
		4	0	0.0286	4.02	0.402	0.187
		5	0	0.0573	8.03	0.804	0.373
7	U.S. Steel, Fairfield, AL	2	2	0.0264	2.47	0.240	0.317
		5	2	0.1225	10.31	1.032	0.448
		6	2	0.1225	10.31	1.032	0.448
		9	2	0.0292	0.39	0.145	0.133
8	National Steel, Granite City, IL	A	0	0.0208	1.95	0.603	0.560
		B	0	0.0208	1.95	0.603	0.560
		C	3	0.0218	2.04	0.630	0.585
9	Interlake, Chicago, IL	1	0	0.2648	2.17	0.503	0.311
		2	0	0.2648	2.17	0.503	0.311
10	LTV Steel,So.Chicago,IL	2	0	0.0278	2.60	0.804	0.373
11	Bethlehem Steel, Burns Harbor, IN	1	0	0.4343	8.09	0.597	0.510
		2	0	0.4343	8.09	0.597	1.021
12	Citizens Gas, Indianapolis, IN	E	0	0.1494	4.64	0.342	0.293
		H	0	0.1303	4.04	0.298	0.255
		I	0	0.2288	7.10	0.393	0.896
13	IN Gas, Terre Haute, IN	1	0	0.0953	2.96	0.164	0.373
		2	0	0.0953	2.96	0.164	0.373
14	Inland Steel, E. Chicago, IN	6	0	0.3443	6.41	0.473	0.405
		7	0	0.4608	8.58	0.633	0.541
		8	0	0.4608	8.58	0.633	0.541
		9	0	0.4608	8.58	0.633	0.541
		10	0	0.2701	5.03	0.278	0.317
15	U.S. Steel, Gary, IN	1	2	0.4502	8.38	0.619	1.058
		5	1	0.4078	7.59	0.420	0.958
		7	1	0.4078	7.59	0.420	0.958
		13	1	0.4078	7.59	0.420	0.958
		15	0	0.4078	7.59	0.420	0.479
		16	1	0.4078	7.40	0.420	0.479
16	LTV Steel, E.Chicago,IN	4	2	0.3972	7.40	0.546	0.467
		9	2	0.4608	8.58	0.633	0.541

(continued)

TABLE 7-11. (continued)

No.	Plant	Battery No.	Status	Midrange Baseline Emissions (Mg/yr)			
				Charges	Doors	Lids	Offtakes
17	Armco Inc.,Ashland,KY	3	0	0.2357	3.30	0.764	0.473
		4	0	0.0324	3.04	0.938	0.871
18	Bethlehem Steel,Sparrows Pt., MD	1	1	0.3337	2.73	0.344	0.392
		2	1	0.3178	2.60	0.327	0.392
		3	2	0.3337	2.73	0.344	0.392
		4	2	0.3337	2.73	0.344	0.392
		5	2	0.3337	2.73	0.344	0.392
		6	2	0.3337	2.73	0.344	0.392
		11	0	0.3443	2.82	0.473	0.809
		12	0	0.3443	2.82	0.473	0.405
		A	0	0.0370	0.49	0.184	0.337
19	Rouge Steel,Dearborn,MI	A	0	0.0827	1.95	0.336	0.259
		Ax	0	0.0184	0.43	0.075	0.057
		B	0	0.1011	2.39	0.411	0.316
		Dx	0	0.0496	1.17	0.202	0.155
20	National Steel, Detroit, MI	4	0	0.1434	3.38	0.583	0.448
		5	0	0.1562	6.09	0.846	0.244
21	Carondolet, St. Louis, MO	1	0	0.0441	5.35	0.169	0.249
		2	0	0.0199	2.41	0.076	0.112
		3	0	0.0386	4.69	0.147	0.218
22	Tonawanda, Buffalo, NY	1	0	0.3796	2.60	0.190	0.373
23	Bethlehem Steel, Lackawanna, NY	7	0	0.2357	3.30	0.240	0.473
		8	0	0.2357	3.30	0.240	0.473
		9	0	0.2264	3.17	0.308	0.454
24	LTV Steel,Warren,OH	4	0	0.4502	3.69	0.855	1.058
25	Armco Inc., Middletown,OH	1	0	0.3019	9.05	0.764	0.710
		2	0	0.3019	9.05	0.764	0.710
		4	0	0.4025	5.14	0.764	0.946
26	New Boston, Portsmouth, OH	1	0	0.2225	4.74	0.704	0.436
27	Koppers, Toledo, OH	C	0	0.1811	3.86	0.573	0.355
28	LTV Steel, Cleveland,OH	1	0	0.0296	3.45	0.161	0.142
		2	0	0.2701	3.45	0.513	0.317
		3	0	0.2701	3.45	0.513	0.317
		4	2	0.2701	3.45	0.513	0.317
		6	0	0.1158	4.26	0.633	0.175
		7	0	0.1158	4.26	0.633	0.175
29	U.S. Steel, Lorain, OH	D	2	0.3125	3.99	0.593	0.734
		G	2	0.3125	3.99	0.593	0.367
		H	2	0.3125	3.99	0.593	0.367
		I	2	0.3125	3.99	0.593	0.367
		J	2	0.3125	3.99	0.593	0.367
		K	2	0.3125	3.99	0.593	0.367
		L	2	0.3125	3.99	0.593	0.367
30	AL Byproducts,Keystone,PA	3	2	0.0525	3.72	0.232	0.153
		4	2	0.0525	3.72	0.232	0.153

(continued)

TABLE 7-11. (continued)

No.	Plant	Battery No.	Status	Midrange Baseline Emissions (Mg/yr)			
				Charges	Doors	Lids	Offtakes
31	Bethlehem Steel, Bethlehem, PA	A	0	0.1273	5.41	0.337	0.444
		2	0	0.1622	6.90	0.537	0.283
		3	0	0.1622	6.90	0.537	0.283
		5	0	0.1273	5.41	0.337	0.222
32	LTV Steel, Aliquippa,PA	A1	0	0.1686	7.17	0.335	0.294
33	LTV Steel, Pittsburgh,PA	P1	0	0.0938	3.99	0.186	0.164
		P2	0	0.0938	3.99	0.186	0.164
		P3N	0	0.0938	3.99	0.186	0.164
		P3S	0	0.0938	3.99	0.186	0.164
		P4	0	0.0938	3.99	0.186	0.164
34	Koppers, Erie, PA	A	0	0.0220	1.56	0.097	0.064
		B	0	0.0334	2.37	0.147	0.097
35	Shenango, Pittsburgh, PA	1	0	0.0156	0.35	0.097	0.236
		4	0	0.0334	2.37	0.111	0.194
36	U.S. Steel, Clairton, PA	1	1	0.1018	4.33	0.270	0.355
		2	1	0.1018	4.33	0.270	0.355
		3	1	0.1018	4.33	0.270	0.355
		7	1	0.1018	4.33	0.270	0.355
		8	1	0.1018	4.33	0.270	0.355
		9	1	0.1018	4.33	0.270	0.355
		15	1	0.0282	0.38	0.140	0.257
		19	0	0.1384	5.89	0.367	0.483
		20	0	0.0403	0.54	0.200	0.367
		21	0	0.1368	5.82	0.362	0.478
		22	0	0.1384	5.89	0.367	0.483
		B	0	0.0347	0.46	0.172	0.316
37	U.S. Steel, Fairless Hills, PA	1	2	0.1304	5.55	0.259	0.455
		2	2	0.1304	5.55	0.259	0.455
38	Wheeling-Pitt, Monessen, PA	1A	2	0.0589	2.50	0.117	0.103
		1B	0	0.0589	2.50	0.156	0.205
		2	0	0.0302	1.29	0.080	0.106
39	Chattanooga Coke, Chattanooga, TN	1	0	0.0229	1.04	0.076	0.149
		2	0	0.0191	0.87	0.063	0.124
40	Lone Star Steel, Lone Star, TX	C	0	0.0406	0.24	0.295	0.295
41	U.S. Steel, Provo, UT	1	0	0.1002	2.73	0.199	0.350
		2	0	0.1002	2.73	0.199	0.350
		3	0	0.1002	2.73	0.199	0.350
		4	0	0.1002	2.73	0.199	0.350
42	Weirton Steel, Brown's Is.,WV	1	2	0.2698	5.89	0.367	1.083
43	Wheeling-Pitt, E.Steubenville,WV	1	0	0.1458	3.18	0.198	0.293
		2	0	0.1458	3.18	0.198	0.293
		3	0	0.1582	3.45	0.215	0.317
		8	0	0.2450	5.34	0.333	0.983

Status
0=online
1=hot idle
2=cold idle
3=under construction

TABLE 7-12. SUMMARY OF NATIONWIDE BSO EMISSION ESTIMATES[a]

Source	Baseline emissions (Mg/yr)	Regulatory Alternative II emissions (Mg/yr)	Percent reduction[b]	Regulatory Alternative III emissions (Mg/yr)	Percent reduction[b]
Charging	23 (0.24-46)	12 (0.18-24)	48	3.5 (0.10-7.0)	85
Doors	588 (96.5-1,080)	332 (54.4-609)	44	49.6 (8.0-91.2)	92
Lids	54.6 (14.8-94.4)	41.5 (11.3-71.6)	24	16.4 (4.4-28.4)	70
Offtakes	52.9 (14.4-91.4)	34.7 (9.4-60.0)	34	31.0 (8.4-53.7)	41
Total	719 (126-1,310)	420 (75.3-765)	42	101 (21-180)	86

[a]Midrange value followed by minimum and maximum estimates in parentheses.

[b]Percent reduction from baseline based on midrange values.

Emission estimates for Regulatory Alternative III with limits of 11 seconds per charge, 5 PLD, 1 PLL, and 4 PLO are also given in Table 7-12. This alternative would reduce the estimated nationwide emissions of BSO from 719 Mg/yr to 101 Mg/yr, an 86-percent reduction.

8. COSTS

8.1 INTRODUCTION

This chapter analyzes the costs associated with control of emissions from wet-coal charging and leaking doors, lids, and offtake systems. The control of these fugitive emissions involves the coordination of equipment modification, work practices, emission monitoring, and corrective action. Emission control at coke plants has improved significantly over the past 10 to 15 years as the industry has developed and implemented new control equipment, improved operating procedures and worker training, and included more diligent supervision of the emission control program. The improved controls were implemented in response to regulations promulgated by the Occupational Safety and Health Administration (OSHA), State agencies, and technology-forcing consent decrees negotiated on a plant-by-plant basis by the U.S. Environmental Protection Agency (EPA). The emission control levels required by these existing regulations vary in stringency and have resulted in different performance levels at different batteries.

Cost data for the control of coke oven emissions were received for 16 batteries at four coke plants in response to detailed questionnaires and plant visits. The coke batteries at these four plants were chosen to include the general types of batteries found in the industry and include metallurgical and foundry coke producers; old, new, and rebuilt batteries; single and double collecting mains; hand-luted and self-sealing doors; short (<5 m) and tall (≥ 5 m) batteries; and existing emission limits that range from the most stringent to the least stringent regulations currently in effect.

The cost data supplied by the industry represent the costs currently being incurred by the various batteries to meet their existing regulations. The analysis in this chapter compares differences in the costs

incurred at these batteries to differences in the required control performance. This comparison is used in an attempt to estimate reasonable incremental increases in control costs that might be associated with incremental improvements in emission control. The following sections will first describe the batteries, control techniques, and the data they supplied. Next, these data are used to estimate control costs for each emission point. Incremental costs for improved control are estimated from the comparison of differences in total costs to the differences in required control performance.

8.2 COST COMPONENTS

The cost data from Empire Coke are summarized in Table 8-1.[1] The two batteries are operated as one with one larry car that serves all 60 ovens. This plant produces foundry coke with a normal coking time of 30 hours. The batteries are the Semet-Solvay type and were originally constructed in 1904 to 1912. The collecting main on Battery 1 was replaced in 1960, and both the collecting main and offtake system were replaced on Battery 2 in 1979. The new collecting main is larger than the one it replaced to accommodate the larger gas volumes from stage charging.[2]

The company reported that extensive modifications were required on these old batteries to implement stage charging. For example, an expenditure of $715,000 (1979 dollars) was reported for replacing the collecting main, modifying the coal belt, installing a weigh scale, and extending the larry car tracks. Permanent jumper pipes were added to improve the aspiration system, the battery top was repaved, and the larry car was modified. The control of leaks from doors, lids, and offtakes is accomplished by the manual application of a luting mixture. Estimates are provided in Table 8-1 for inspecting, cleaning, materials, and luting labor to control these leaks.

The cost data from Bethlehem Steel's plant at Sparrows Point are provided in Table 8-2.[3] Battery 1 is a short (3-m) battery with a single collecting main and hand-luted doors. Additional aspiration for stage charging is provided by a jumper pipe. Battery 11 is a double main battery with self-sealing doors. At the time the information was gathered (September 1984), the company was in the process of

TABLE 8-1. COST DATA FROM EMPIRE COKE[1]

Plant: Empire Coke, Holt, AL
Battery: 1, 2
No ovens: 60 (single main)
Capacity (1,000 Mg/yr): 160.6

	Item description	Cost	Year	Index	1984 $
1.	Basic stage charging system	397,000	1974	2.0[a] 2.4[b]	794,000
2.	Basic written procedures	500	1974	2.4[b]	1,200
3.	Aspiration system	10,000	1974	2.0[a]	20,000
4.	Inspect, clean goosenecks	3,100/yr	1984	-	3,100/yr
5.	Inspect, clean standpipes	1,600/yr	1984	-	1,600/yr
6.	Inspect, clean roof carbon	1,700/yr	1984	-	1,700/yr
7.	Inspect, clean steam nozzles	10,800/yr	1984	-	10,800/yr
8.	Inspect, clean liquor spray	10,800/yr	1984	-	10,800/yr
9.	Larry car modifications	14,000	1979	1.3[c]	18,000
10.	Leveler boot	5,000	1979	1.3[c]	6,500
11.	Engineering study	74,000	1974	2.4[b]	178,000
12.	Detailed procedures, all sources	1,000	1984	-	1,000
13.	Training program, all sources	1,000/yr	1984	-	1,000
14.	Battery modifications*	715,000	1979	1.3[c]	930,000
15.	Monitoring, all sources	10,000/yr	1984	-	10,000/yr
16.	Repave oven top	6,000	1974	2.0[a]	12,000
17.	Inspect, clean, replace lids	3,100/yr	1984	-	3,100/yr
18.	Inspect, clean, replace standpipes	1,600/yr	1984	-	1,600/yr
19.	Inspect, clean, replace goosenecks	3,100/yr	1984	-	3,100/yr
20.	Inspect, clean, replace slipjoint seal	1,300/yr	1984	-	1,300/yr
21.	Labor for luting, reluting lids, caps (6 hr/day)	46,000/yr	1984	-	46,000/yr
22.	Inspect and clean doors	7,300/yr	1984	-	7,300/yr
23.	Labor to lute doors and caps	61,000/yr	1984	-	61,000/yr
24.	Labor to mix luting material	26,000/yr	1984	-	26,000/yr
25.	Cost of luting material	20,000/yr	1984	-	20,000/yr

Note: For the footnotes to the indices see Table 8-5.

*Includes replacing collecting main, modifying coal belt, installing a weigh scale, and extending larry car tracks.

TABLE 8-2. COST DATA FROM BETHLEHEM STEEL[3]

Plant: Bethlehem Steel, Sparrows Point, MD

Battery:	1	11	A
No. ovens:	63	65	80
Height (m):	3	3.5	6
Mains:	1	2	2
Door seal:	L	SS	SS
Capacity (1,000 Mg/yr):	273	365	1,148

(L = luted, SS = self-sealing)

	Item description (battery No.)	Unit cost	Unit	Year	Index	1984 $
1.	Jumper pipe (1)	5,000	Each	1984	-	5,000
2.	Written procedures	Negligible	-	-	-	-
3.	Aspiration system	3,345,000	Plant	1977	1.6[e]	5,350,000
4.	Aspiration system	280,000	Battery	1977	1.6[e]	448,000
5.	Inspect, clean goosenecks (1, 11)	5,800	Battery-mo	1984	-	5,800
6.	Inspect, clean goosenecks (A)	4,400	Battery-mo	1984	-	4,400
7.	Inspect, clean steam nozzles (1, 11)	2,100	Battery-mo	1984	-	2,100
8.	Inspect, clean steam nozzles (A)	Negligible	-	-	-	-
9.	Inspect, clean liquor spray (1, 11)	2,100	Battery-mo	1984	-	2,100
10.	Inspect, clean liquor spray (A)	350	Battery-mo	1984	-	350
11.	Larry car modifications (1, 11)	500,000	Battery	1976	1.7[f]	850,000
12.	Leveler bar seal (1, 11)	133,000	Battery	1977	1.6[f]	213,000
13.	Repave battery top (11)	625,000	Battery	1980	1.2[g]	750,000
14.	Repave battery top (11)	9,600	Oven	1980	1.2[g]	12,000
15.	Monitoring, all coke plant sources	50,000	Yr-9 batteries	1984	-	50,000
16.	Monitoring, all coke plant sources	5,600	Yr-battery	1984	-	5,600
17.	Engineering study	Included in individual items				
18.	Offtake sealing (1, 11)	7,900	Battery-mo	1984	-	7,900
19.	Offtake sealing (A)	8,500	Battery-mo	1984	-	8,500
20.	Replace slipjoint seal (1, 11)	Included in Item 5				
21.	Replace slipjoint seal (A)	150	Each	1984	-	150
22.	Written procedures for doors	Negligible	-	-	-	-
23.	Install NiCuTi door seals (11)	1,450	Door	1984	-	1,450
24.	Spare doors, cost to maintain	4,000	Each	1984	-	4,000
25.	Chuck door gaskets (1)	Negligible	-	-	-	-
26.	Operate, service all ovens and door repair facility	160,000	Plant-mo	1984	-	160,000
		17,800	Battery-mo	1984	-	17,800
		275	Oven-mo	1984	-	275

Note: For the footnotes to the indices see Table 8-5.

equipping 10 doors on Battery 11 with vented door plugs and modified seals made of NiCuTi alloy. Jambs are repaired at a rate of about 2 per week by welding cracks and grinding to a smooth finish.[4]

Battery A is a new 6-meter battery equipped with a double collecting main and self-sealing doors with a knife edge seal made of NiCuTi alloy. The cleaning of door seals and jambs is performed by an automatic door cleaning machine and is supplemented by manual cleaning at a rate of once per month. Two persons per shift are assigned to make door seal adjustments and to perform manual cleaning as needed to reduce leaks. Lids are luted manually, and standpipe lids have a water seal that requires cleaning about once per month.[4]

The company data given in Table 8-2 include the major capital and labor cost items for emission control. Some of the data were reported as a plant total, which was converted to a per-battery basis by dividing the total cost by the number of batteries at the plant.

Armco's coke plant at Middletown, Ohio, has one short battery and two recently reconstructed Carl-Still 6-meter batteries. All three batteries are equipped with double collecting mains and self-sealing doors. The short battery was installed in 1953 and has not required a major rebuild or rehabilitation, probably because the battery has not been cooled down. The 6-meter batteries were built in 1976 and extensive modifications were made recently to improve structural integrity and door leak control.[5]

Armco is finishing a door leak control program that included jamb straightening or replacement, pressure-reducing door plugs, modified door seals and adjusting springs, and buckstay reinforcement. Extensive repairs were required on the 6-meter batteries because the original door seals leaked badly and caused door fires when the batteries were new. A total of about $7.5 million was spent to modify the entire end closure system on the tall batteries and includes expenditures to correct a structural design problem with the batteries as originally constructed. Door repair is performed onsite and is supplemented by the services of an outside contractor. Armco personnel believed that tighter tolerances on seal specifications plus a higher frequency of door repair or replacement would be needed to reduce door leaks.[5]

The cost data from Armco are summarized in Tables 8-3 and 8-4.[6] The extensive door modifications for the tall batteries in Table 8-3 total $7.5 million. In addition, other modifications were made on the tall batteries and are summarized in Table 8-4. Most of the items listed in the tables would tend to improve emission control; however, it is not clear what portion of the cost, if any, should be attributed to emission control and what portion of the costs should be attributed to maintenance and prolonging the life of the battery. Table 8-5 presents the footnotes to indices in Tables 8-1 through 8-4.

Cost data were also received from U.S. Steel's Clairton Works where extensive research, development, and implementation of improved control techniques have occurred over the past 10 to 15 years.[7 8 9] The cost and labor hour estimates provided by the company were claimed to be confidential and are not presented here. The control costs incurred by U.S. Steel included the costs for monitoring, cleaning, repairing, and luting various equipment items. In addition, costs were incurred for maintaining or replacing slip joint seals, jamb repairs, door seals, and the door leak control program.

The batteries at U.S. Steel's Clairton Works include old and rebuilt batteries and a new 6-meter battery. All batteries have double collecting mains and self-sealing doors that were modified to improve emission control. The company optimized its stage charging procedure, modified doors, seals, and procedures to obtain consistent emission control, and installed new slip joint seals to alleviate problems with offtake leaks.[10 11]

8.3 COST ESTIMATES

In this section the individual cost items supplied by the companies are compiled for each emission point. The major capital and annual cost components are identified and total annualized costs are estimated. Capital cost items are annualized over an average 20-year lifetime at a rate of 6.2 percent (after adjustment for inflation).

8.3.1 Charging Control Costs

The charging control costs for Empire Coke's battery are given in Table 8-6. The two major capital items include extensive battery

TABLE 8-3. COST DATA FROM ARMCO, INC.[6]

Plant: Armco, Inc., Middletown, OH

Battery:	1	2	3
Type:	Wilputte	Still	Still
Height (M):	4	6	6
No. ovens:	76	57	57
Mains:	2	2	2
Capacity (1,000 Mg/yr):	448	664	664

	Item description (battery No.)	Unit cost	Unit	Year	Index	1984 $
1.	Additional labor for doors (person per shift) (1)	120,000	Battery-yr	1984	-	120,000
2.	Additional labor for doors (2, 3)	None	-	-	-	-
3.	Door repair costs (1)	295,000	Battery-yr	1984	-	295,000
4.	Door repair costs (2, 3)	293,000	Battery-yr	1984	-	293,000
5.	Spare doors--8 (1)	16,000	Each	1984	-	16,000
6.	Spare doors--16 (2, 3)	25,000	Each	1984	-	25,000
7.	Replace chuck doors	400	Each	1984	-	400
8.	Door test program (2, 3)	300,000	2 batteries	1984	-	300,000
9.	End closure modifications (2, 3):					
	Jambs	2,989,000	2 batteries	1984	-	2,989,000
	Lintels	27,000	2 batteries	1984	-	27,000
	Protective castings	33,000	2 batteries	1984	-	33,000
	Fab. doors	226,000	2 batteries	1984	-	226,000
	Spare doors	87,000	2 batteries	1984	-	87,000
	Oven doors	1,784,000	2 batteries	1984	-	1,784,000
	Buckstay plates	43,000	2 batteries	1984	-	43,000
	Install plates	470,000	2 batteries	1984	-	470,000
	Inspection stations	140,000	2 batteries	1984	-	140,000
	Door cleaners	666,000	2 batteries	1984	-	666,000
	Jamb cleaners	200,000	2 batteries	1984	-	200,000
	Event recorders	39,000	2 batteries	1984	-	39,000
	Subtotal	6,704,000	2 batteries	1984	-	6,704,000
	Engineering	120,000	2 batteries	1984	-	120,000
	Contingency	634,000	2 batteries	1984	-	634,000
	Total	7,458,000	2 batteries	1984	-	7,458,000

(continued)

TABLE 8-3 (continued)

Item description (battery No.)	Unit cost	Unit	Year	Index	1984 $
10. Additional topside labor, 2/shift (1)	240,000	Battery-yr	1984	-	240,000
11. Additional topside labor, 1/shift (2, 3)	120,000	2 batteries-yr	1984	-	120,000
12. Offtake modifications (2, 3)	1,100,000	2 batteries	1984	-	1,100,000
13. Offtake modifications (2, 3)	4,725	Each	1984	-	4,725
14. New standpipe caps (1)	11,700	Battery	1984	-	11,700
15. New standpipe caps (1)	77	Each	1984	-	77
16. Stage charging modifications (1)	373,000	Battery	1979	1.3[c]	485,000
17. Engineering study (1)	179,000	Battery	1979	1.7[d]	304,000
18. Development of procedures, all workers	50,000	3 batteries	1984	-	50,000
19. Worker training (1, 2, 3), all workers	216	Worker-yr	1984	-	216
20. Worker training (1)	10,800	Battery-yr	1984	-	10,800
21. Worker training (2, 3)	16,200	2 batteries-yr	1984	-	16,200
22. Askania modifications (2, 3)	14,700	2 batteries	1984	-	14,700
23. Monitoring, all coke plant sources	8,000	3 batteries-yr	1984	-	8,000

Note: For the footnotes to the indices see Table 8-5.

TABLE 8-4. ARMCO COSTS FOR TWO NEW 6-METER BATTERIES[6]

	Item description	Unit cost	Unit	Year	Index	1984 $
1.	114 extra standpipes and goosenecks*	1,023,218	2 batteries	1978	1.4[h]	1,430,000
2.	Extra main, crossovers, valves, bleeders*	1,333,872	2 batteries	1978	1.4[h]	1,870,000
3.	Steam piping, emergency water system	513,777	2 batteries	1978	1.4[h]	719,000
4.	Heavier buckstays, tie rods, springs	142,800	2 batteries	1978	1.4[h]	200,000
5.	Larry car modifications	1,309,002	2 batteries	1978	1.4[h]	1,830,000
6.	Engineering for larry car modifications	178,500	2 batteries	1978	2.0[i]	357,000
7.	Additional row of charging holes	61,625[†]	2 batteries	1978	1.4[h]	86,300
8.	Modified charging holes and lids	79,300[†]	2 batteries	1978	1.4[h]	111,000
9.	Modified goosenecks	74,375	2 batteries	1978	1.4[h]	104,000
10.	Coal bin modifications	476,001	2 batteries	1978	1.4[h]	666,000
11.	Increased cost of 2 cokeside door machines	595,001	2 batteries	1978	1.4[h]	833,000
12.	Engineering for door machines and coke guides	118,999	2 batteries	1978	2.0[i]	238,000
13.	Reinforcement for heavier equipment for doors	386,751	2 batteries	1978	1.4[h]	541,000
14.	Two pusher machines	2,142,003	2 batteries	1978	1.4[h]	3,000,000
15.	Engineering for pusher machines	178,500	2 batteries	1978	2.0[i]	357,000
16.	Brickwork, door, and jamb modifications	2,570,403	2 batteries	1978	1.4[h]	3,600,000
17.	Door seals, beefed up design	538,595	2 batteries	1978	1.4[h]	754,000
18.	8 spare doors	77,474	2 batteries	1978	1.4[h]	108,000
19.	Heavier, wider jambs	207,606	2 batteries	1978	1.4[h]	291,000
20.	Oven armouring	1,529,259	2 batteries	1978	1.4[h]	2,140,000
21.	More expensive foundation	327,250	2 batteries	1978	1.4[h]	458,000
22.	Door repair areas	521,615	2 batteries	1978	1.4[h]	730,000
23.	Increased instrumentation	222,520	2 batteries	1978	1.4[h]	312,000
24.	Tar and flushing liquor system for second main	2,149,085	2 batteries	1978	1.4[h]	3,008,000
25.	Coal mixing and density control	290,700	2 batteries	1978	1.4[h]	407,000

Note: For the footnotes to the indices see Table 8-5.

*Also includes flushing liquor piping, regulating house and regulators, walkways, stairs, platforms, supports, pitch traps.

[†]Estimated as 59,500 × 4/3 to include 4 holes instead of 3 holes.

TABLE 8-5. INDICES FOR UPDATING COSTS[12]

	1974	1976	1977	1978	1979	1980	July 1984
1. Equipment, machinery, supports	171.2	205.8	220.9	240.6	264.5	292.5	345.6
2. Construction labor	163.3	174.2	178.2	185.8	194.9	204.3	263.2
3. Engineering and supervision	139.1	153.5	165.8	168.2	199.5	-	337.7

Footnote	Indices		Factor	Year
a =	345.6/171.2	=	2.0	(1, 1974)
b =	337.7/139.1	=	2.4	(3, 1974)
c =	345.6/264.5	=	1.3	(1, 1979)
d =	337.7/199.5	=	1.7	(3, 1979)
e =	345.6/220.9	=	1.6	(1, 1977)
f =	345.6/205.8	=	1.7	(1, 1976)
g =	345.6/292.5	=	1.2	(1, 1980)
h =	345.6/240.6	=	1.4	(1, 1978)
i =	337.7/168.2	=	2.0	(3, 1978)
j =	263.2/194.9	=	1.4	(2, 1979)

TABLE 8-6. CHARGING COSTS AT EMPIRE COKE

Plant: Empire Coke, Holt, AL
Battery: 1, 2
Description: 60 ovens, foundry coke, single main, 160,600 Mg/yr

A. Charging costs--major capital items

Item	$1,000
Basic stage charging system	794
Develop procedures	2.2
Aspiration system, jumper pipes	20
Larry car modifications	18
Leveler smoke boot	6.5
Engineering study	178
Battery modifications[a]	930
Repave oven top	12
Total	1,960

B. Annual costs

Item	$1,000/yr
Inspect, clean goosenecks	3.1
Inspect, clean standpipes	1.6
Inspect, clean steam nozzles	10.8
Inspect, clean roof carbon[b]	0-1.7
Inspect, clean liquor sprays[b]	0-10.8
Training program	1.0
Monitoring[c]	5.0
Increased steam[d]	34
Capital recovery[e]	174
Total	230-242
$/oven-yr	3,800-4,000
$/Mg	1.43-1.51

[a]Includes replacing collecting main, modifying coal belt, installing a weigh scale, and extending larry car tracks.

[b]Assumes 0 to 100 percent attributable to baseline regulations.

[c]Assumes 50 percent of plant total is for charging.

[d]Estimated as $0.21/Mg coke.

[e]Capital recovery factor = 0.0886 (20 years at 6.2 percent).

modifications ($930,000) and the installation of the basic stage charging equipment ($794,000). Recurring expenses such as periodic inspection, cleaning, training, and monitoring are included as annual costs. A range of 0 to 100 percent of the cost to clean roof carbon and liquor sprays is attributed to emission control because these work practices may be needed for normal operation independent of emission control.

The increase in steam usage was estimated as 17 kg steam/Mg coke[13] and the cost of steam at a coke plant is estimated as $10.50/Mg in 1979 dollars ($12.50/Mg in 1984 dollars).[14] These two figures yield an estimated cost of $0.21/Mg coke for increased steam for stage charging.

The costs for Armco's Wilputte battery are summarized in Table 8-7. The major capital components are modifications for stage charging and a detailed engineering study to optimize the equipment changes and operating procedures. Additional labor added to the topside of the battery is the major annual cost item.

The costs for Armco's two tall batteries are summarized in Table 8-8. Extensive modification of the larry car, an important component of basic stage charging, is the major capital cost item. The company also attributed the costs of a second collecting main and the associated offtake system to charging emission control. The range used for these two items assumes that their cost may be attributed either entirely to emission control or entirely to the cost of constructing (or reconstructing) a battery. Most tall batteries have been constructed with two collecting mains.

The costs for Bethlehem Steel's batteries are summarized in Table 8-9 and again the major capital costs are for the basic stage charging procedure (larry car modifications and improved aspiration). In addition, the top of Battery 11 was repaved and leveled at a cost of $756,000. Labor is required for inspecting and cleaning equipment and for visible emission monitoring.

The costs associated with control of charging emissions were estimated for three U.S. Steel batteries and the totals are given in

TABLE 8-7. CHARGING COSTS FOR ARMCO'S WILPUTTE BATTERIES

Plant: Armco, Inc., Middletown, OH
Battery: 1
Description: 76 ovens, double main, 448,000 Mg/yr

A. Charging costs--major capital items

Item	$1,000
Stage charging modifications	485
Engineering study	304
Development of procedures[a]	8.5
Total	797.5

B. Annual costs

Item	$1,000/yr
Additional labor[b]	120
Worker training[a]	5.4
Monitoring[a]	1.3
Steam[c]	94
Capital recovery[d]	70.7
Total	291
$/oven-yr	3,800
$/Mg	0.65

[a]Assumes 50 percent of plant total is for charging.

[b]Assumes 1 of 2 additional people per shift on topside added for charging control (lid removal, replacement, gooseneck inspection and cleaning).

[c]At $0.21/Mg coke.

[d]Capital recovery factor = 0.0886 (20 years at 6.2 percent).

TABLE 8-8. CHARGING COSTS FOR ARMCO'S TALL BATTERIES

Plant: Armco, Inc., Middletown, OH
Battery: 2, 3
Description: 57 6-m ovens each, 664,000 Mg/yr each

A. Charging costs--major capital items

Item	$1,000
Larry car modifications	1,830
Engineering	357
Modified charging holes and lids	111
Modified goosenecks and standpipes	104
Coal mixing and density control	407
Leveler bar seal	213[a]
Second collecting main and accessories[b]	0-1,870
Extra standpipes and goosenecks[b]	0-1,430
Askania modifications	15
Development of procedures[c]	17
Total	3,054-6,354

B. Annual costs

Item	$1,000/yr
Worker training[c]	8.1
Monitoring[c]	2.7
Steam[d]	279
Labor[e]	60
Capital recovery[f]	271-563
Total	621-913
Per battery-yr	311-457
$/oven-yr	5,400-8,000
$/Mg	0.47-0.69

[a]Derived from Bethlehem Steel questionnaire.

[b]Assumes 0 to 100 percent attributable to baseline regulations.

[c]Assumes 50 percent of the plant total is for charging.

[d]At $0.21/Mg coke.

[e]Assumes one-half of additional topside labor is for charging (lid removal, replacement, gooseneck inspection and cleaning).

[f]Capital recovery factor = 0.0886 (20 years at 6.2 percent).

TABLE 8-9. CHARGING COSTS FOR BETHLEHEM STEEL

Plant: Bethlehem Steel, Sparrows Point, MD
Battery: 1, 11
Description: Battery 1 has 63 ovens, single main, 273,000 Mg/yr.
Battery 11 has 65 ovens, double main, 363,000 Mg/yr.

A. Charging costs--major capital items

Item	$1,000	
	1	11
Larry car modifications	850	850
Improved aspiration system	448	448
Leveler bar seal	213	213
Repave battery top	-	750
Jumper pipe	5	-
Engineering study	Included in above items	
Total	1,516	2,261

B. Annual costs

Item	$1,000/yr	
	1	11
Inspect, clean goosenecks	70	70
Inspect, clean steam nozzles	25	25
Inspect, clean liquor sprays[a]	0-25	0-25
Monitoring[b]	2.8	2.8
Steam[c]	57	77
Capital recovery[d]	134	200
Total	289-314	375-400
$/oven-yr	4,600-5,000	5,800-6,200
$/Mg	1.06-1.15	1.03-1.10

[a]Assumes 0 to 100 percent is attributable to baseline regulations.

[b]Assumes 50 percent of plant total is for charging.

[c]At $0.21/Mg coke.

[d]Capital recovery factor = 0.0886 (20 years at 6.2 percent).

Table 8-10. The derivation of total costs for these batteries is consistent with the previous cost estimates and the cost components are similar to those identified in the estimates for the other three plants. One difference in the estimates derived for U.S. Steel compared to the other plants is a more labor-intensive effort to clean, repair, and maintain goosenecks, steam nozzles, collecting mains, and charging ports. A higher cost for visible emission monitoring was also estimated for U.S. Steel's Clairton Works.

The costs for each battery used in the analysis are summarized in Table 8-11. Charging emission control costs range from $230,000 to $485,000 per year or $0.47 to $1.51/Mg coke. Also given in Table 8-11 is the current charging emission limit (baseline) applicable to each battery. The average performance given in the right-hand column of the table represents the estimated average control level that will enable the battery to meet the limit a high percentage (approximately 95 percent) of the time. The costs summarized in Table 8-11 are costs that have already been incurred because of essentially complete conversion by the industry to some form of stage charging.

The costs in Table 8-11 appear to be inversely related to the baseline regulations, i.e., lower costs are seen for higher baseline limits. Battery 20 at the Clairton Works is an exception in that the costs for all of the Clairton batteries are similar; however, Battery 20 is not achieving the stringent limits (11 seconds per charge) 100 percent of the time. The average midrange costs for each plant were determined on a per battery basis and are listed below with the estimated average performance required to meet the emission limit:

Plant	$/battery-year	Average s/charge
Empire Coke	236,000	24
Bethlehem Steel	345,000	17
Armco, Inc.	338,000	17
U.S. Steel	431,000	9.3

A linear regression of cost versus average seconds per charge yielded the equation:

TABLE 8-10. CHARGING COSTS FOR U.S. STEEL AT CLAIRTON

Plant: U.S. Steel, Clairton, PA
Battery: 2, 20, 21
Description: Battery 2 has 64 ovens, double main, 300,000 Mg/yr.
Batteries 20, 21 each have 87 ovens, double main, 535,000 Mg/yr

Cost estimate	Battery 2	Battery 20, 21
Annual cost ($1,000/yr)	377-436	425-485
$/oven-yr	5,900-6,800	4,900-5,600
$/Mg	1.26-1.45	0.79-0.91

TABLE 8-11. CHARGING COSTS SUMMARY

Plant	Battery	$1,000/yr	$1,000/oven-yr	$/Mg	Baseline s/charge[a]	Estimated average s/charge
Empire, Holt	1, 2	230-242	3.8-4.0	1.43-1.51	45	24
Bethlehem	1	289-314	4.6-5.0	1.06-1.15	32	17
	11	375-400	5.8-6.2	1.03-1.10	32	17
Armco	1	291	3.8	0.65	25 (1/20)	17
	2, 3	311-457	5.4-8.0	0.47-0.69	25 (1/20)	17
U.S. Steel	2	377-436	5.9-6.8	1.26-1.45	19	9.3
	21	425-485	4.9-5.6	0.79-0.91	19	9.3
	20	425-485	4.9-5.6	0.79-0.91	11	5.0

[a](1/20) = excludes highest observation in 20.

Cost per battery ($1,000/yr) = 560 - 13 (s/charge).

The slope of the above equation implies that a battery would incur a cost of $13,000 per year to decrease charging emissions by 1 second per charge. Presumably, this additional cost would reflect additional labor hours for inspecting, monitoring, training, supervision, repairs, and other additional components of U.S. Steel's optimized charging procedure. The comparison of costs and average performance levels suggest that the Bethlehem Steel and Armco batteries would incur costs of approximately $100,000 per year for each battery to improve emission control to the levels required at the Clairton Works. This cost is roughly one-third of the total costs already incurred at the two plants to implement stage charging. For the battery at Empire Coke, annual costs may increase by $195,000 per year (82 percent of the costs already incurred) to achieve the levels at Clairton. This estimate is generated by multiplying the difference in average performance (24-9) by $13,000 per year.

The costs for any specific battery to improve charging emission control will be determined by a myriad of interrelated factors and battery-specific characteristics and could be quite different from the incremental cost estimated by the above correlation of cost and performance. However, the data supplied by industry do offer a reasonable alternative for estimating costs on a nationwide basis if the costs for the batteries in the data base are generally representative of the industry as a whole.

8.3.2 Door Leak Control Costs

The door leak control costs for Empire Coke are summarized in Table 8-12. Door leaks are controlled by the manual application of luting material and, consequently, the major cost component is the annual cost of labor. A range of 50 to 100 percent of the total labor is attributed to emission control for OSHA and environmental regulations because the doors would be luted routinely as part of normal operation even in the absence of regulations.

The door control costs for Armco, Inc., are given in Table 8-13 and Table 8-14 and also reflect a range of 50 to 100 percent attributed to OSHA and environmental regulations. The end closure modifications

TABLE 8-12. DOOR CONTROL COSTS FOR EMPIRE COKE

Plant: Empire Coke, Holt, AL
Battery: 1, 2
Description: 60 ovens; hand-luted doors; 160,600 Mg coke/yr

A. Door costs

Item	Range ($1,000/yr)
Inspect and clean doors[a]	3.7-7.3
Labor to lute doors[a,b]	27.5-55.0
Labor to mix luting material[a,b]	11.7-23.4
Cost of luting material[a,b]	9.0-18.0
Monitoring[c]	2.5
Total	54.4-106.2
$/oven-yr	910-1,800
$/Mg	0.34-0.66

[a]Assumes 50 to 100 percent of plant total is attributable to baseline regulations.

[b]Assumes 90 percent of total luting costs are for doors and 10 percent for topside.

[c]Assumes 25 percent of total monitoring is for door leaks.

TABLE 8-13. DOOR CONTROL COSTS FOR ARMCO'S WILPUTTE BATTERY

Plant: Armco, Inc., Middletown, OH
Battery: 1
Description: 76 4-m ovens, self-sealing doors, 448,000 Mg/yr

A. Door costs - major capital items

Eight additional spare doors at $16,000 each or $128,000 total.

B. Annual door costs

Item	$1,000/yr
Door repairs[a]	150-295
Additional labor	120
Worker training[b]	1.1
Monitoring[c]	0.7
Capital recovery[d]	11
Total	283-428
$/oven-yr	3,700-5,600
$/Mg	0.63-0.96

[a]Assumes 50 to 100 percent attributable to baseline regulations.

[b]Assumes 10 percent of plant total is for doors.

[c]Assumes 25 percent of plant total is for doors.

[d]Capital recovery factor = 0.0886 (20 years at 6.2 percent).

TABLE 8-14. DOOR CONTROL COSTS FOR ARMCO'S 6-m BATTERIES

Plant: Armco, Inc., Middletown, OH
Battery: 2, 3
Description: 6-m Carl-Still, 57 ovens each, 664,000 Mg/yr each.

A. Door costs--major capital items

Item	$1,000
Door test program	300
Spare doors[a]	400
End-closure modifications[b]	0-7,500
	700-8,200

B. Annual costs

Item	$1,000/yr
Door repairs[c]	293-585
Additional labor	None
Worker training[d]	2.2
Monitoring[e]	1.4
Capital recovery[f]	62-727
Total	359-1,320
$/oven-yr	3,100-11,600
$/Mg	0.27-0.99

[a]16 additional spare doors at $25,000 each.

[b]Assumes 0 to 100 percent attributable to baseline regulations.

[c]Assumes 50 to 100 percent attributable to baseline regulations.

[d]Assumes 10 percent of plant total is for doors.

[e]Assumes 25 percent of plant total is for doors.

[f]Capital recovery factor = 0.0886 (20 years at 6.2 percent).

for Armco's tall batteries ($7.5 million) may enable these batteries to meet their existing door leak standard. However, the modifications and repairs would probably have been needed at some point in the near future to maintain the operational status of the batteries. The labor for door repairs is a major component of the annual costs for all three Armco batteries. In addition, the costs for recovering the capital investment to rebuild the end closure systems on the tall batteries contributes significantly to their total annual cost.

The door control costs for three batteries at Bethlehem's Sparrows Point Plant are summarized in Table 8-15. The major cost component is the labor costs for repairs and a range of 50 to 100 percent is used because some portion of this total cost is likely to be incurred even in the absence of regulations. The new Battery A apparently offers economy of scale because the estimated control costs are lower for this high capacity battery on the basis of coke production ($0.12 to 0.25/Mg coke).

The total for the estimated control costs at the Clairton Works are summarized in Table 8-16 for eight batteries. The major cost components used to derive the estimates are increased operating expense from more frequent cycling through the door repair shop, more extensive repairs and attention to detail in the door repair shop, jamb repairs, and capital recovery for the installation of modified doors and seals. U.S. Steel's new Battery B also offers some economy of scale because this high capacity battery has the lowest costs on the basis of coke production ($0.33 to $0.36/Mg coke).

The estimated control costs for door leaks are summarized in Table 8-17 along with the current door leak standard applicable at each battery. The door leak control costs do not appear to be related to the regulations and vary widely by battery type and choice of assumptions. For example, Batteries 2 and 3 at Armco have undergone an extensive rebuild of the end closure system, and, depending upon whether this is completely attributed to emission control, the costs

TABLE 8-15. DOOR CONTROL COSTS FOR BETHLEHEM STEEL

Plant: Bethlehem Steel, Sparrows Point, MD
Battery: 1, 11, A
Description: Battery 1 has 63 3-m ovens, hand-luted doors, 273,000 Mg/yr.
Battery 11 has 65 3.5-m ovens, self-sealing doors, 365,000 Mg/yr.
Battery A is a new 6-m, 80 ovens, self-sealing doors, 1,148,000 Mg/yr

A. Door costs--major capital items

Item	$1,000		
	1	11	A
Install NiCuTi door seals[a]	-	190	-
Original door seals[b]	-	-	0-220
Spare doors[c]	24	26	32
	24	216	32-252

B. Annual door costs

Item	$1,000/yr		
	1	11	A
Operate, service all ovens and door repair facility[d]	105-210	108-215	132-264
Monitoring[e]	1.4	1.4	1.4
Capital recovery[f]	2.1	19.0	2.8-22
Total	109-214	128-235	136-287
$/oven-yr	1,700-3,400	2,000-3,600	1,700-3,600
$/Mg	0.40-0.78	0.35-0.64	0.12-0.25

[a] $1,450 each.

[b] Assumes 0 to 100 percent attributable to baseline regulations at $1,400 each.

[c] Assumes 5 percent extra for spares at $4,000 each (from Table 8-2) to maintain spares.

[d] Assumes 50 to 100 percent is attributable to baseline regulations at $3,300/oven-yr.

[e] Assumes 25 percent of plant total is for doors.

[f] Capital recovery factor = 0.0886 (20 years at 6.2 percent).

TABLE 8-16. DOOR CONTROL COSTS FOR U.S. STEEL AT CLAIRTON

Plant: U.S. Steel, Clairton, PA
Description: Batteries 1, 2, 7 have 64 ovens, 296,000 Mg/yr; Battery 17 has 61 ovens, 302,000 Mg/yr; Batteries 19, 20, 21 have 87 ovens, 530,000 Mg/yr; Battery B is a new 6-m with 75 ovens and 804,000 Mg/yr.

Cost estimate	Battery number			
	1,2,7	17	19,20,21	B
Annual cost ($1,000/yr)	230	283	311	269-287
$/oven-yr	3,600	4,600	3,600	3,600-3,800
$/Mg	0.78	0.94	0.59	0.33-0.36

TABLE 8-17. DOOR COSTS SUMMARY

Plant	Battery	$1,000/yr	$1,000/oven-yr	$/Mg	Baseline PLD
Armco, Middletown	2, 3	180-660	3.1-11.6	0.27-0.99	16
Empire, Holt	1, 2	54.4-106	0.9-1.8	0.34-0.66	15
U.S. Steel, Clairton	1, 2, 7	230	3.6	0.78	11.6
U.S. Steel, Clairton	17	283	4.6	0.94	11.6
U.S. Steel, Clairton	19, 21	311	3.6	0.59	11.1
Armco, Middletown	1	283-428	3.7-5.6	0.63-0.96	11.3
Bethlehem, Sparrows Pt.	1	109-214	1.7-3.4	0.40-0.78	10
Bethlehem, Sparrows Pt.	11	128-235	2.0-3.6	0.35-0.64	10
Bethlehem, Sparrows Pt.	A	136-287	1.7-3.6	0.12-0.25	5
U.S. Steel, Clairton	20	311	3.6	0.59	5
U.S. Steel, Clairton	B	269-287	3.6-3.8	0.33-0.36	5

vary from $3,100 to $11,600/yr per oven. The hand-luted doors at Empire Coke and at Bethlehem Steel (Battery 1) appear to show higher costs for a tighter baseline (15 to 10 percent leaking door [PLD]) with an increased cost of $800 to $1,600/yr per oven. The remaining batteries, with self-sealing doors, are grouped in the range of 5 to 11.6 PLD with costs that are similar ($1,700 to $5,600/yr per oven).

Because the cost data in Table 8-17 show no obvious correlation between cost and performance level, an attempt was made to place bounds on door control costs by generating a lower bound and an upper bound estimate. A procedure for generating the lower bound estimate is to examine the improvement in emission control at each battery that was obtained by incurring the total cost. For example, the total cost for each battery in Table 8-17 represents the cost to improve control from some "uncontrolled" level in the absence of regulations to the current control level. This "uncontrolled" level is difficult to define but observations of door leakage on poorly controlled batteries have been observed to range from 40 to 70 PLD. Data from U.S. Steel's Clairton Works showed a range of 38 to 45 percent leaking ovens[11] before the implementation of their door leak control program in response to their negotiated consent decree. An average starting point of 55 PLD is assumed for all of the batteries (except U.S. Steel where the specific 45 percent leaking ovens was observed), and the endpoint is the estimated level of current performance.

In Table 8-18, the difference between previous and current control in PLD is divided into the annual cost to provide an incremental cost for an improvement of 1 PLD. For example, the estimated improvement in control at Armco's Battery 1 is 44 PLD (55-11) at a total cost per oven of $3,700 to $5,600 per year. The annual cost per oven ranges from $84 to $127 for an improvement of 1 PLD. This approach assumes that the cost is linearly related to the PLD reduction and yields estimates for a 1-PLD improvement that range (per oven) from $34 to $62/yr for hand-luted doors and $61 to $210/yr for self-sealing doors.

The approach described above is likely to bound costs on the lower end because control costs are more likely to be exponentially

TABLE 8-18. DOOR COSTS AND PERFORMANCE

Company	Battery	Annual Cost ($1,000/oven-yr)	PLD From	PLD To	$/oven-yr PLD Midrange	$/oven-yr PLD Range
Armco, Inc.	1	3.7-5.6	55[a]	11[b]	106	84-127
Armco, Inc.	2,3	3.1-11.6	55[c]	20[c]	210	89-331
Empire	1,2[d]	0.9-1.8	55[a]	15[b]	34	23-45
Bethlehem	1[d]	1.7-3.4	55[a]	14[e]	62	41-83
	11	2.0-3.6	55[a]	14[f]	69	49-88
	A	1.7-3.6	55[a]	11[f]	61	39-82
U.S. Steel	All	3.6-4.6	45[g]	5[g]	103	90-115

[a]Assumed PLD level prior to control program.

[b]Assumed to be meeting existing State regulation.

[c]From Armco trip report, Reference 5.

[d]Hand-luted doors.

[e]Assumed to be the same as Battery 11.

[f]From Bethlehem Steel trip report, Reference 4.

[g]Data provided by U.S. Steel in Reference 11.

related to PLD. The initial control of emissions generally provides the greatest and easiest reduction. Subsequent improvements may require additional equipment or redoubling of labor efforts to obtain a small increment of improvement. For example, if the costs are the same to improve control from 0 to 90 percent, 90 to 99 percent, and 99 to 99.9 percent, then a linear assumption between cost and control performance from the first increment (0 to 90 percent) would tend to understate the costs for subsequent incremental improvements in control.

The cost data provided by U.S. Steel's Clairton Works are used to generate an upper bound estimate of door leak control costs. The technology and achievable performance levels at Clairton have been demonstrated and well documented. From Table 8-17, the overall average cost at Clairton is estimated as $3,700/oven-yr for their current door leak control program. The improvement in control associated with this cost was reported as roughly 42 percent leaking ovens to 5 PLD. Currently, the most lenient regulations for door leaks are 15 and 16 PLD. For the worst case, assume that if these batteries must improve control from 15 to 10 PLD, then they will incur costs equal to the full costs incurred at Clairton. The assumption in effect is that there may be existing batteries that do not have the modified door seals and the extensive monitoring, inspection, and repair program implemented at Clairton, and that the entire program must be implemented to achieve the reduction from 15 to 10 PLD. The cost for this incremental improvement is about $740/oven-yr-PLD ($3,700/oven-yr divided by 5 PLD).

Many batteries may merely supplement their existing door leak control programs. For these batteries, the range from Table 8-18 ($34-210/oven-yr-PLD) may be more appropriate, particularly if improvement is obtained by increasing labor with no significant capital investment. An overall range for door leak control costs of $61/oven-yr-PLD (average from Table 8-18) to $740/oven-yr-PLD is recommended for self-sealing doors.

The estimate of $740/oven-yr for an improvement of 1 PLD is believed to be a reasonable upper bound estimate because all existing batteries have already improved control well beyond the 45 percent

leaking ovens at which the Clairton Works started. Many aspects of Clairton's program were likely implemented by the other batteries to improve control to their current levels (all with regulations of 16 PLD or less). However, the upper bound estimate assumes that the other batteries must implement the entire program of U.S. Steel to achieve the same performance levels obtained at the Clairton Works.

8.3.3 Topside Leak Control Costs

The control of leaking lids and offtakes on the topside of the battery is accomplished primarily by the manual application of a luting mixture. In addition, damaged offtakes and slip joints may require repair or replacement. The topside leak control costs for Empire's coke plant are summarized in Table 8-19 and indicate that luting labor is the primary component. A range of 50 to 100 percent of the luting labor is attributed to emission control regulations because the lids and offtakes would be luted to some extent as a part of routine battery operation to prevent fires and loss of valuable by-products.

The estimated topside leak control costs for Armco's batteries are given in Table 8-20. Topside labor is a major component of the costs for both lids and offtakes. In addition, a capital expenditure of $1.1 million is included for the two tall batteries for replacement of the offtake systems. The tall batteries appear to offer an economy of scale even with the major capital expenditure to replace offtakes with costs of $0.03 to $0.09/Mg coke for lids and offtakes.

The control costs for topside leaks at Bethlehem's batteries are given in Table 8-21. Labor again is a primary component of the annual cost. Although offtakes were not replaced, the cost to maintain the slip joint seals on the offtake system is another major cost component. Bethlehem's new Battery A also provides an economy of scale with topside control costs that range from $0.03 to $0.06/Mg coke.

The total costs estimated for topside leak control at U.S. Steel's Clairton Works are provided in Table 8-22. The major annual cost items included in the estimate are cleaning and luting labor and maintenance of slip joint seals. Capital costs were also estimated for replacing the offtake systems. As observed with the other tall

TABLE 8-19. TOPSIDE LEAK CONTROL COSTS FOR EMPIRE COKE

Plant: Empire Coke, Holt, AL
Battery: 1, 2
Description: 60 ovens; 3 lids and 1 offtake per oven; 160,600 Mg/yr

A. Topside leak control costs[a]

Item	$1,000/yr	
	Lids	Offtakes
Luting labor[b]	17.3-34.5	5.8-11.5
Maintain slip joint seal	-	1.3
Inspect, clean, repair lids[b]	1.6-3.1	-
Labor to mix luting material[b,c]	1.0-2.0	0.3-0.7
Cost of luting material[b,c]	.8-1.5	0.3-0.5
Monitoring[d]	1.3	1.3
Total	22-42.4	9.0-15.3
$/oven-yr	370-710	150-260
$/Mg	0.14-0.26	0.06-0.10

[a]Labor items applicable to both lids and offtakes are split 75/25 percent (3 lids and 1 offtake).

[b]Assumes 50 to 100 percent is attributable to baseline regulations.

[c]Assumes 10 percent of plant total is for topside leak control (90 percent for luted doors).

[d]Assumes 25 percent of plant total is for topside leaks and divided evenly between lids and offtakes (one traverse for each).

TABLE 8-20. TOPSIDE LEAK CONTROL COSTS FOR ARMCO, INC.

Plant: Armco, Inc., Middletown, OH
Battery: 1, 2, 3
Description: (1) 76 ovens, 3 lids and 2 offtakes per oven, 448,000 Mg/yr; (2, 3) 57 ovens each, 6-m height, 4 lids and 2 offtakes per oven, 664,000 Mg/yr each.

A. Topside capital costs[a]

	$1,000			
	1		2, 3	
Item	Lids	Offtakes	Lids	Offtakes
Replace offtake system	-	-	-	1,100
Replace standpipe caps	-	11.7	-	-
Develop procedures[b]	2.5	1.7	5.7	2.8
Total	2.5	13.4	5.7	1,103

B. Annual costs[a]

	$1,000/yr			
	1		2, 3	
Item	Lids	Offtakes	Lids	Offtakes
Additional topside labor[c]	72	48	40	20
Monitoring[c,d]	0.4	0.4	0.7	0.7
Training[c,d]	1.4	1.4	2.1	2.1
Capital recovery[e]	0.2	1.2	0.5	98
Total	74	51	43.3	120.8
$/oven-yr	970	670	380	1,100
$/Mg	0.17	0.11	0.03	0.09

[a]Items applicable to both lids and offtakes are split 60/40 percent for Battery 1 and 67/33 percent for Batteries 2 and 3.

[b]Assumes 25 percent of plant total is for topside leaks.

[c]Assumes one-half of additional labor is for topside leaks and one-half for charging.

[d]Training and monitoring costs are divided evenly between lids and offtakes.

[e]Capital recovery factor = 0.0886 (20 years at 6.2 percent).

TABLE 8-21. TOPSIDE LEAK CONTROL COSTS FOR BETHLEHEM STEEL

Plant: Bethlehem Steel, Sparrows Point, MD
Battery: 1, 11, A
Description: (1) 63 ovens, 4 lids and 1 offtake per oven, 273,000 Mg/yr;
(11) 65 ovens, 4 lids and 2 offtakes per oven, 365,000 Mg/yr;
(A) 80 6-m ovens, 4 lids and 2 offtakes per oven, 1,148,000 Mg/yr.

A. Topside leak control costs[a]

Item	$1,000/yr					
	1		11		A	
	Lids	Offtakes	Lids	Offtakes	Lids	Offtakes
Topside luting[b]	38.4-76	9.6-19	32-63.3	16-31.7	34-68	17-34
Maintain slip joint seal[c]	-	18-35	-	18-35	-	13-26
Monitoring[d]	0.7	0.7	0.7	0.7	0.7	0.7
Total	39.1-76.7	28.3-54.7	32.7-64.0	34.7-67.4	34.7-68.7	30.7-60.7
$/oven-yr	620-1,200	450-870	500-980	530-1,000	430-860	380-760
$/Mg	0.14-0.28	0.08-0.15	0.09-0.18	0.10-0.18	0.03-0.06	0.03-0.05

[a]Items applicable to both lids and offtakes are split 20/80 percent for Battery 1 and 67/33 percent for Batteries 11 and A.

[b]Assumes 50 to 100 percent of cost is attributable to baseline regulations.

[c]Assumes slip joint maintenance is 25 to 50 percent of the total for inspecting, cleaning, and repairing offtakes.

[d]Assumes 25 percent of plant total is for topside leaks and cost is evenly divided between lids and offtakes.

TABLE 8-22. TOPSIDE LEAK CONTROL COSTS FOR U.S. STEEL AT CLAIRTON

Plant: U.S Steel, Clairton, PA
Battery: 2, 20, 21, B
Description: (2) 64 ovens, 4 lids and 2 offtakes per oven, 300,000 Mg/yr;
(20, 21) 87 ovens, 4 lids and 2 offtakes per oven, 535,000 Mg/yr;
(B) 75 6-m ovens, 4 lids and 2 offtakes per oven, 804,000 Mg/yr.

	Battery 2		Battery 20		Battery 21		Battery B	
Cost estimate	Lids	Offtakes	Lids	Offtakes	Lids	Offtakes	Lids	Offtakes
Annual cost ($1,000/yr)	88.5-173	138-180	96-188	183-229	96-188	183-229	39-73	5.8
$1,000/oven-yr	1.4-2.7	2.2-2.8	1.1-2.2	2.1-2.6	1.1-2.2	2.1-2.6	0.5-1.0	0.1
$/Mg	0.30-0.58	0.46-0.60	0.18-0.35	0.34-0.43	0.18-0.35	0.34-0.43	0.05-0.09	0.01

batteries, U.S. Steel's Battery B requires the lowest control cost on a coke production basis at a level of $0.01 to $0.09/Mg coke. The U.S. Steel costs appear to be higher than the costs at other batteries and the major difference is in the estimated amount of topside labor. The replacement of offtakes also increases U.S. Steel's cost, but the offtakes were also replaced at Armco's tall batteries.

The control costs for lid leaks are summarized in Table 8-23 for all batteries. Current baseline regulations for percent leaking lids (PLL) are also given. The control costs on a per oven basis appear to increase as the stringency of the baseline regulation increases. The midrange costs for each plant on a per oven basis from Table 8-23 are listed below:

Plant	$/Oven-yr	Baseline PLL	Average PLL
Empire Coke	540	5	3.5
Armco, Inc.	680	5	3.5
Bethlehem Steel	825	3	1.9
U.S. Steel	1,800	1-2	0.6-1.1

The average PLL given above is the estimated average performance that would be required to meet the current regulation (baseline PLL) a high percentage of the time. A linear regression of cost versus average PLL yielded the equation:

$$\text{Cost per oven (\$/yr)} = 1{,}930 - 400\ (\text{Average PLL}).$$

The slope of the above equation suggests that an annual expenditure of $400 per oven is required to obtain a decrease of 1 PLL.

The cost estimate derived above can be applied to a typical battery to determine if the $400/oven-yr estimate is reasonable in terms of luting labor. Consider a 60-oven battery with 4 lids per oven and an 18-hour cycle time. For a 1-percent improvement in PLL, an additional 2.4 lid leaks ($4 \times 60 \times 0.01$) per cycle must be located and luted. This is equal to about 3.2 additional lid leaks per day ($2.4 \times 24 \div 18$) or 1,170 additional leaks per year to be luted. The incremental cost is estimated as $400/oven-yr or $24,000/yr for a

TABLE 8-23. LID LEAK CONTROL COSTS

Plant	Battery	$1,000/yr	$1,000/oven-yr	$/lid-yr	$/Mg	Baseline PLL
Empire Coke	1, 2	22-42.4	0.37-0.71	120-240	0.14-0.26	5
Armco, Inc.	1	74	0.97	325	0.17	5
	2, 3	21.7	0.38	95	0.03	5
Bethlehem	1	39.1-76.7	0.62-1.2	160-300	0.14-0.28	3
	11	32.7-64.0	0.50-0.98	130-250	0.09-0.18	3
	A	34.7-68.7	0.43-0.86	110-210	0.03-0.06	1
U.S. Steel	2	88.5-173	1.4-2.7	350-680	0.30-0.58	2
	20	96-188	1.1-2.2	280-540	0.18-0.35	1
	21	96-188	1.1-2.2	280-540	0.18-0.35	2
	B	39-73	0.5-1.0	130-240	0.05-0.09	1

60-oven battery. The cost of additional luting of lid leaks is about $20/lid leak, or about 48 minutes per leak at $25/hour. The estimate of 48 minutes appears reasonable if it includes a distribution of total plant labor (e.g., monitoring, maintenance, and supervision). The estimate of $400/oven-yr for a 1-PLL improvement in control does not appear to understate costs in terms of the labor required to lute a leaking lid.

Control costs for offtake leaks are summarized in Table 8-24 and show that the highest estimated costs have been incurred at U.S. Steel's Clairton Works. The average midrange costs per oven are given below for each plant:

Plant	$/Oven-yr	Baseline PLO	Average PLO
Empire Coke	205	10	6.5
Armco, Inc.	885	10	6.5
Bethlehem Steel	665	10	6.5
U.S. Steel	2,400	4-5	2.2-2.9

The higher estimated costs for U.S. Steel reflect an estimate of more manpower for topside labor and the replacement of offtake systems. The average PLO given above represents the estimated average performance that would be required to meet the current standard (baseline) a high percentage of the time. The incremental cost difference between plants ranges from $1,500 to $2,200/oven-yr for an improvement of about 3.6 units in average PLO (6.5 to 2.9). This estimate yields a range of $420 to $610/oven-yr for each percent decrease in PLO. This difference in cost between batteries implies that Armco's and Bethlehem's costs could increase by a factor of 3 to 4 to attain the control level in effect at U.S. Steel's plant. Because of the marginal improvement required (6.5 to 2.9 PLO), the range of $420 to $610/oven-yr is likely an upper bound estimate of cost for control of offtake leaks.

The application of the cost function to a 60-oven battery with double collecting mains yields an annualized cost of $25,000 to $37,000/yr for a 1-percent improvement in PLO. The 1-percent improvement represents about 1.6 additional offtake leaks controlled per day or 584 offtake leaks per year. The cost corresponds to $43 to $63/offtake leak or

TABLE 8-24. OFFTAKE LEAK CONTROL COSTS

Plant	Battery	$1,000/yr	$1,000/oven-yr	$/offtake-yr	$/Mg	Baseline PLO
Empire Coke	1, 2	9.0-15.3	0.15-0.26	150-260	0.06-0.10	10
Armco, Inc.	1	51.0	0.67	340	0.11	10
	2, 3	60.4	1.1	530	0.09	10
Bethlehem	1	28.3-54.7	0.45-0.87	450-870	0.08-0.15	10
	11	34.7-67.4	0.53-1.0	270-500	0.10-0.18	10
	A	30.7-60.7	0.38-0.76	190-380	0.03-0.05	4
U.S. Steel	2	138-180	2.2-2.8	1,100-1,400	0.46-0.60	5
	20	183-229	2.1-2.6	1,100-1,300	0.34-0.43	4
	21	183-229	2.1-2.6	1,100-1,300	0.34-0.43	5
	B	5.8	0.1	50	0.01	4

1.7 to 2.5 person-hours per leak at a labor rate of $25/hr. The estimated cost appears to be high in terms of labor hours because minutes instead of hours should be required to lute a leak. However, capital costs for replacing offtakes and repairing slip joint seals were significant elements in U.S. Steel's total costs. Consequently, the costs for offtake leak control include the annualized cost of capital in addition to the simple labor cost of luting and reluting. The increased cost of control is likely to be lower than stated above for most batteries because few of the batteries are likely to replace entire offtake systems to improve average performance from 6.5 to 2.9 PLO.

8.4 MODEL BATTERY AND NATIONWIDE COSTS

8.4.1 Model Battery Costs

The cost functions developed in Section 8.3 are applied in this section to model batteries to illustrate the procedure for estimating nationwide costs. The procedure is based on battery-specific characteristics, such as the number of doors and ovens, and on the required improvement in control. For the example case of model batteries, the costs are based on improving control to the levels demonstrated by CF&I and U.S. Steel's Clairton Works as discussed in Chapter 4. The demonstrated control levels are a log average limit of 16 seconds per charge, which requires an average performance of 10 seconds per charge, a limit of 10 PLD with an average performance of 7 PLD, a limit of 3 PLL with an average performance of 1.8 PLL, and a limit of 6 PLO with an average of 3.5 PLO. These control levels were chosen as Regulatory Alternative II.

Costs for the model batteries that were developed in Chapter 6 are presented in Table 8-25. The baseline limits that were chosen for the illustration represent the most lenient regulations currently in effect and, consequently, the costs represent estimates for the most affected population of batteries. Many batteries are currently subject to emission limits that are roughly equal to or more stringent than the levels demonstrated by CF&I and U.S. Steel. Batteries with current limits equal to or less than those demonstrated by the recommended

TABLE 8-25. MODEL BATTERY COSTS FOR REGULATORY ALTERNATIVE II

	Model Battery 1	Model Battery 2	Model Battery 3
Capacity (Mg/yr)	106,000	344,000	770,000
Height (m)	3.5	4.0	6.0
Number of ovens	36	62	71
Baseline[a]			
Seconds per charge[b]	25(17)	25(17)	25(17)
PLD	15(11.3)	15(11.3)	16(12.1)
PLL	5(3.5)	5(3.5)	5(3.5)
PLO	10(6.5)	10(6.5)	10(6.5)
Total annualized cost ($1,000/yr)			
Charging	91	91	91
Doors	62	107	145
Lids	24	42	48
Offtakes	56	96	110
Doors (maximum)	115	200	230
$/Mg			
Charging	0.86	0.26	0.12
Doors	0.58	0.31	0.19
Lids	0.23	0.12	0.062
Offtakes	0.53	0.28	0.14
Doors (maximum)	1.08	0.58	0.30

[a]Limit followed by estimated average performance in parentheses.

[b]25 s/charge excluding 1 observation in 20. The average of 17 s/charge also results from a limit of 32 s/charge with no exclusions.

technology would not incur any significant costs from a national standard based on the technology.

The cost estimates in Table 8-25 were derived by applying the cost functions developed in Section 8.2 to the specific characteristics of the model batteries. For charging, an estimate of $13,000/yr was derived for each battery as the cost to obtain an emission control improvement of 1 second per charge. The baseline limit for the example is 25 seconds per charge (excluding one observation in 20) with an estimated average of 17 seconds per charge. The technology demonstrated a level of 16 seconds per charge (log basis) with an average performance of 10 seconds per charge. The cost estimate is based on an average improvement of 7 seconds per charge (17 to 10) times $13,000/yr, or $91,000/yr for each battery.

The costs for doors were estimated as $61 to $740/oven-yr for a decrease of 1 PLD. A midrange value of $400/oven-yr was used in the example and was multiplied by 4.3 PLD (11.3 to 7) and the number of ovens for Model Batteries 1 and 2. The most lenient regulation for tall batteries is a limit of 16 PLD with an estimated average of 12.1 PLD. The door control costs for Model Battery 3 are estimated as 5.1 (12.1 to 7) times $400/oven-yr times the number of ovens.

The estimated cost to improve lid leak control by 1 PLL is $400/oven-yr. The average improvement used in the example is 1.7 PLL (3.5 to 1.8), which is multiplied by $400/oven-yr and the appropriate number of ovens to estimate the total annual cost.

A midrange value of $515/oven-yr ($420 to $610/oven-yr) was used for offtakes for an improvement of 1 PLO. The average improvement in the example is 3 PLO (6.5 to 3.5), which is multiplied by $515/oven-yr and the number of ovens to estimate the total annual cost.

A worst-case or maximum cost was derived for the case of door leak controls and was based on the upper end of the estimated range ($740/oven-yr). The maximum case assumes that each of the model batteries must implement the entire door leak control program that is used at U.S. Steel's Clairton Works. No credit for costs incurred to reach their current baseline are given to the batteries under this assumption.

The costs expressed in $/Mg of coke indicate that the taller and higher capacity batteries are less affected in terms of production costs. Most new batteries are the 6-meter type represented by Model Battery 3. Consequently, the lower costs (in $/Mg coke) shown for Model Battery 3 are probably representative of costs that might be incurred for new sources.

Reasonable estimates of capital costs for improved emission control generally require identification of specific equipment and its installed costs. The industry-supplied data indicated that the control of coke oven emissions was a labor-intensive effort. Major equipment modifications have already been made by most batteries as a result of OSHA regulations, State regulations, and consent decrees. Dramatic improvements in control performance have been observed in recent years. Consequently, the effect of a national standard based on the demonstrated emission limits (Regulatory Alternative II) will require only a nominal improvement in control for most batteries. This improvement in control is small compared to the improvement made in recent years from a poorly controlled status to the current baseline status. The required improvement may be accomplished by most batteries through additional labor and changes in work practices.

No capital costs are estimated for charging. The basic technology of some form of stage charging requires a significant capital investment; however, this cost is entirely attributable to the baseline. The improvement in charging emission control is expected to result from optimization of procedures, additional inspection and cleaning of equipment, more supervision, and visible emission monitoring to troubleshoot emission control difficulties. These items are treated as recurring annual expenses. A few batteries may choose to invest capital in some minor items, such as new steam nozzles or some modified design. However, these capital expenses will be very specific to a battery's characteristics and are expected to be minor when compared to the major expenditures already incurred for stage charging.

Some batteries may incur capital costs for door leak control if they choose to modify their doors and seals as suggested by U.S. Steel.

The data supplied by industry indicated that a major expense for door leak control was labor. These labor costs resulted from more frequent cycling through the door shop, more extensive repairs to doors, maintaining seals within tight tolerances, inspection and cleaning of seals and jambs, and visible emission monitoring. For the purpose of estimating nationwide capital costs, the annualized cost of capital was estimated as 10 percent of the total annual cost, or $40/oven-yr for the midrange value. The capital was annualized over 20 years at 6.2 percent with a capital recovery factor of 0.0886. The capital investment is then estimated as $450/oven (40÷0.0886) for an improvement of 1 PLD. Applying this cost function to the model batteries yields estimated capital costs of $70,000, $120,000, and $160,000, respectively, for the three models. The worst case or maximum approach for door leaks yields an estimated capital requirement of $835/oven for a 1-PLD improvement. The capital requirements for the models on this worst-case basis are $130,000, $220,000, and $300,000, respectively.

Lid leak control is accomplished almost entirely by the labor effort to lute, locate leaks, and relute as necessary. No capital costs are estimated for this emission point.

The cost data for offtake leaks indicated that some batteries incurred a cost to replace offtakes or slip joint seals to improve emission control. However, the major expenses were primarily recurring labor items for inspecting, cleaning, repairing, luting, reluting, and monitoring. To estimate nationwide capital costs, the annualized cost of capital was again assumed to be 10 percent of the annual costs. This assumption yields an estimate of $350/oven as the capital cost to improve offtake leaks by 1 PLO. For the models, the capital costs are then estimated as $38,000, $65,000, and $75,000, respectively.

8.4.2 Nationwide Costs

Nationwide costs were estimated on a battery-specific basis using the procedure illustrated for the model batteries. Data were available for each battery for the number of ovens and current baseline requirements in terms of visible emission limits. The baseline limits were

converted to an average performance level. The average performance levels of the demonstrated technology (10 s/charge, 7 PLD, 1.8 PLL, 3.5 PLO) were used with the baseline average to estimate the average required improvement in emission control. The average improvement, the cost function, and the number of ovens at each battery were then used to estimate total cost. (A listing of batteries with their current baseline is given in Chapter 3.)

The nationwide costs of Regulatory Alternative II for improved charging emission control from the analysis described above is estimated as $4.7 million per year. For door leaks, the nationwide cost is estimated as $5.4 million/yr with a potential capital requirement of $6 million. The annualized cost for lid leaks was estimated as $1.6 million/yr. For offtakes, the nationwide cost was estimated as $7.6 million/yr with a potential capital requirement of $5.2 million.

A maximum cost was estimated for door leaks from the upper bound of the cost functions. This approach assumes that the affected batteries may be required to implement essentially the entire door leak control program of U.S. Steel. On a nationwide basis, these maximum door control costs were estimated as $10 million/yr with a capital requirement of $11 million.

The cost analysis approach used in this chapter contains a significant element of uncertainty, especially when the cost functions are applied to any specific battery. An improved approach would be to examine each individual battery, estimate the specific items that might be required to improve control, and then generate an estimate for each individual battery in the industry. Such an approach would require extensive resources, and because assumptions at each battery would still be required, the approach would still yield a significant amount of uncertainty in the final estimate.

The data used in this analysis were supplied by industry and should represent actual costs that have been incurred. If the batteries in the data base and their cost information are generally representative of the industry, then the nationwide cost estimates are likely to be representative on an aggregated basis. However, the costs for any

specific battery may be higher or lower than the cost estimated from the cost functions.

Several factors indicate that the cost estimates for door leak and offtake leak controls may be high. The estimated requirements for these sources could be less than estimated because only marginal improvements in control performance are required. These improvements may be accomplished at many batteries without the capital investment and intensive labor effort on which this cost analysis is based. In addition, the nationwide cost estimates include totals for batteries that are currently shut down and may not be restarted. Consequently, the estimated nationwide costs probably do not understate costs and may be somewhat higher than the costs that will actually be incurred. Each plant would likely decide on the most cost-effective method to improve control at each specific battery. The plant's approach may be accomplished by techniques and redistribution of labor efforts that are less costly than those estimated by the cost functions.

8.5 OTHER COST CONSIDERATIONS

Coke plants are subject to a number of regulations that relate to emissions and emission control. OSHA has developed occupational health rules that restrict personal exposure of workers to 10 ppm of benzene and to 150 $\mu g/m^3$ of benzene soluble organics, both on a time-weighted basis. The coke plants also have existing regulations for control of air emissions from charging, doors, lids, offtakes, pushing, quenching, and battery stacks. In addition, water regulations are in effect for the effluent discharged from wastewater treatment plants. The costs for OSHA regulations and other air and water regulations have been included in the baseline costs, which will be analyzed in Chapter 9, Economic Impact.

8.6 REFERENCES

1. Section 114 Questionnaire Response from Empire Coke, Holt, Alabama. December 3, 1984.

2. Coy, D. W. Trip Report for Empire Coke, Holt, Alabama. September 19, 1984.

3. Section 114 Questionnaire Response from Bethlehem Steel Corporation, Sparrows Point, Maryland. November 15, 1984.

4. Coy, D. W. Trip Report for Bethlehem Steel Corporation, Sparrows Point, Maryland. September 17, 1984.

5. Branscome, M. R. Trip Report for Armco, Inc., Middletown, Ohio. September 26, 1984.

6. Section 114 Questionnaire Response from Armco, Inc., Middletown, Ohio. October 23, 1984.

7. Section 114 Questionnaire Response from U.S. Steel Corporation, Pittsburgh, Pennsylvania. September 6, 1974.

8. Section 114 Questionnaire Response from U.S. Steel Corporation, Clairton, Pennsylvania. October 24, 1984.

9. Section 114 Questionnaire Response from U.S. Steel Corporation, Clairton, Pennsylvania. December 10, 1984.

10. Coy, D. W. Trip Report for U.S. Steel Corporation, Clairton Works, Pennsylvania. September 13, 1984.

11. Control of Emissions from Coke Oven Doors: Design and Operational Guidelines. Published by U.S. Steel Corporation, Pittsburgh, Pennsylvania. 1983.

12. Cost Indices from Chemical Engineering. Published by McGraw Hill, New York. 1974-1984.

13. Development of Air Pollution Cost Functions for the Integrated Iron and Steel Industry. PEDCo Environmental, Inc. EPA Contract No. 68-02-3071. July 1979.

14. Technical Approach for a Coke Production Cost Model. PEDCo Environmental, Inc. EPA Contract No. 68-02-3071. December 1979.

9.0 ECONOMIC IMPACT

This chapter addresses the economic impacts of Regulatory Alternative II for coke oven topside, charging, and door leaks emissions sources. This alternative applies to both new and existing coke ovens and is more fully described in Chapter 6. Because of uncertainties in the unit compliance cost estimates, impacts are presented for two cost scenarios: mid-range cost estimate and upper bound cost estimate. Regulatory Alternative II is projected to increase the price of furnace coke by 0.2 percent and reduce production by 0.3 percent. The price of foundry coke would increase by less than 1 percent and production would decrease, at most, by 2.8 percent. No furnace or foundry coke battery is expected to close as a result of Regulatory Alternative II.

Section 9.1 presents a profile of the coke industry. Section 9.2 contains the analysis of the impacts of the regulatory alternatives. These alternatives are outlined in Table 9-1. The impacts are measured against the baseline state of control for all sources. Section 9.3 presents potential socioeconomic and inflationary impacts.

9.1 INDUSTRY PROFILE

9.1.1 Introduction

Coke production is a part of Standard Industrial Code (SIC) 3312--Blast Furnaces and Steel Mills. Coke is principally used in the production of steel and ferrous foundry products, which are also part of the output of SIC 3312. Thus coke is both produced and principally consumed within SIC 3312. Furthermore, many producers of furnace coke are fully integrated iron- and steel-producing companies. Any regulation on coke production is expected to have some impact on the entire blast furnaces and steel mills industry with special emphasis on coke producers.

TABLE 9-1. COKE OVEN CONTROL OPTION: REGULATORY ALTERNATIVE II

Emission source	Emission limits[a]	Control technology
Charging	16 seconds/charge	Optimized stage charging
Door leaks	10 PLD	Door control program, modified doors and seals
Lid leaks[b]	3 PLL	Adequate luting manpower
Offtake leaks[b]	6 PLO	Adequate luting manpower, repair or replacement

[a]PLD = Percent leaking doors
PLL = percent leaking lids
PLO = percent leaking offtakes.

[b]Lid and offtake leaks are collectively termed "topside" leaks in this chapter.

This profile has two purposes: (1) to provide the reader with a broad overview of the industry and (2) to lend support to an economic analysis by assessing the appropriateness of various economic models to analyze the industry. Further, the profile provides some of the data necessary to the analysis itself.

The industry profile comprises six major sections. The remainder of this introduction, which constitutes the first section, provides a brief, descriptive, and largely qualitative look at the industry. The remaining five sections of the profile conform with a particular model of industrial organizational analysis. This model maintains that an industry can be characterized by its basic conditions, market structure, market conduct, and market performance.

The basic conditions in the industry, discussed in the second and third sections of this profile, are believed to be major determinants of the prevailing market structure. Most important of these basic conditions are supply conditions, which are largely technological in nature, and demand conditions, which are determined by the attributes of the products themselves.

The market structure and market conduct of the blast furnaces and steel mills industry are examined in the fourth section. Issues addressed include geographic concentration, firm concentration, integration, and barriers to entry. Market structure is believed to have a major influence on the conduct of market participants. Market conduct is the price and nonprice behavior of sellers. Of particular interest is the degree to which the industry pricing behavior can be approximated by the competitive pricing model, the monopoly pricing model, or some model of imperfect competition.

The fifth section of the industry profile addresses market performance. The historical record of the industry's financial performance is examined, with some emphasis on its comparison with other industries. The sixth section of the industry profile presents a discussion of industry trends for the coke and steel sectors. The seventh section discusses market behavior.

9.1.1.1 Definition of the Coke Industry. Coke production is a part of SIC 3312--Blast Furnaces and Steel Mills, which includes establishments that produce coke and those that primarily manufacture hot metal, pig iron, silvery pig iron, and ferroalloys from iron ore and iron and steel scrap. Establishments that produce steel from pig iron, iron scrap, and steel scrap and establishments that produce basic shapes such as plates, sheets, and bars by hot rolling the iron and steel are also included in SIC 3312.[1] The total value of shipments from SIC 3312 in 1982 was $36,931,900,000[2] and an approximate value for total coke production in 1982 was $3,220,011,000,[3] or less than 10 percent of the total value of shipments.

Coke is produced in two types of plants: merchant and captive. Merchant plants produce coke to be sold on the open market, and many are owned by chemical or other companies. The majority of coke plants in the United States are captive plants which are vertically integrated with iron and steel companies and use coke in the production of pig iron. At the end of 1984, 15 plants were merchant and 36 were captive, and merchant plants accounted for only 12 percent of total coke production.[4] [5]

9.1.1.2 Brief History of the Coke Industry in the Overall Economy. Traditionally, the value of coke produced in the United States has constituted less than 1 percent of the gross national product (GNP).[6] [7] During most of the 1950's, coke production was about 0.3 percent of GNP, and during the 1960's and until the mid-1970's, coke production was only about 0.2 percent or less of GNP. However, in 1974, coke production as a percent of GNP rose to above 0.3 percent. This trend continued for the next 2 years. By 1982, coke production was about 0.1 percent of GNP.[3] [8]

Previously, U.S. coke exports had been greater than imports, but that trend has fluctuated. The values of all U.S. imports and exports and U.S. coke imports and exports are shown in Table 9-2. From 1950 to 1972, coke exports were much greater than coke imports, but after 1973, this trend was reversed. In 1982 and 1983, exports again exceeded imports. Data for the second quarter of 1984 indicate that coke imports are again on the rise. Imports for the first two quarters of 1984 totaled 247,604 megagrams (Mg) compared to 6,874 Mg for the same period in 1983, and to 32,000 Mg for all

TABLE 9-2. COKE INDUSTRY FOREIGN TRADE[a] 9 10 11 12 13 14 15

Year	Total U.S. imports (10^9 $)[a]	Coke imports for consumption (10^6 $)[a]	Coke imports as a share of total imports (%)	U.S. exports (10^9 $)[a]	Coke exports (10^6 $)[a]	Coke exports as a share of total exports (%)
1950	8.9	5.3	0.06	10.3	6.2	0.06
1951	11.0	1.9	0.02	15.0	17.7	0.12
1952	10.7	4.5	0.04	15.2	13.7	0.09
1953	10.9	1.7	0.02	15.8	9.3	0.06
1954	10.2	1.3	0.01	15.1	6.2	0.04
1955	11.4	1.4	0.01	15.5	8.2	0.05
1956	12.6	1.5	0.01	19.1	11.5	0.06
1957	13.0	1.5	0.01	20.9	14.4	0.07
1958	12.8	1.6	0.01	17.9	7.1	0.04
1959	15.2	1.4	0.01	17.6	8.7	0.05
1960	14.7	1.5	0.01	20.6	6.9	0.03
1961	14.7	1.5	0.01	21.0	8.2	0.04
1962	16.4	1.9	0.01	21.7	7.4	0.03
1963	17.1	2.0	0.01	23.3	8.3	0.04
1964	18.7	1.5	0.01	26.5	10.1	0.04
1965	21.4	1.4	0.01	27.5	16.3	0.06
1966	25.5	1.8	0.01	30.3	23.4	0.08
1967	26.8	1.7	0.01	31.5	16.5	0.05
1968	33.2	1.9	0.01	34.6	18.6	0.05
1969	36.0	3.4	0.01	38.0	38.5	0.10
1970	39.9	3.5	0.01	42.5	78.9	0.19
1971	45.6	5.0	0.01	43.5	44.8	0.10
1972	55.8	4.6	0.01	49.4	30.7	0.06
1973	70.5	39.3	0.06	71.4	33.1	0.05
1974	103.7	193.2	0.19	98.3	43.6	0.04
1975	98.0	156.5	0.16	107.1	74.7	0.07
1976	124.0	111.1[b]	0.09	114.7	66.7[b,c]	0.06
1977	151.9	137.9[b]	0.09	120.8	71.9[b,d]	0.06
1978	176.0	410.9[b]	0.23	142.1	68.9[b]	0.05
1979	212.0	340.1[b]	0.16	184.5	15.0[b]	0.01
1980	249.7	52.0[b]	0.02	224.2	12.9[b]	0.005
1981	265.1	54.0[b,e]	0.02	237.0	11.3[b]	0.005
1982	243 9	9.2[b]	0.004	212.3	13.8[b]	0.01
1983	258.0	1.9[b]	0.0007	200.5	8.3[b]	0.004

[a]Current dollars.

[b]See Product SIC (331210) in References 11-13.

[c]Defined as "Pitch coke, Coke of coal, lignite, or peat."

[d]Defined as "Coal coke, calcined and not calcined."

[e]Cumulative through November 1981. Annual cumulative value not available.

of 1983.[16] Exports for the first two quarters of 1984 and 1983 were 307,540 Mg, and 300,283 Mg, respectively, and were 603,288 Mg for all of 1983.[16]

The same pattern applies to the percentages of coke imports and exports within total U.S. imports and exports. From 1950 to 1972, coke exports were a larger percentage of total U.S. exports than coke imports were of total U.S. imports. Again, from 1973 to 1981, this trend reversed, and coke imports were a larger proportion of total U.S. imports than coke exports were of total U.S. exports. Percentage shares of exports were greater than imports in 1982 and 1983.

U.S. coke production has always been a substantial portion of world coke production. This share has decreased during the past 30 years, as indicated in Table 9-3. From 1950 to 1977, world coke production generally increased while U.S. coke production decreased. This trend explains the decline in the U.S. percentage of world coke production.

9.1.1.3 Size of the Iron and Steel Industry. The value of shipments of SIC 3312 has increased since 1960. There have been a few fluctuations in this growth; for example, as shown in Table 9-4, the 1965 value of shipments of SIC 3312 was the highest value between 1960 and 1972. Since 1972, the value of shipments has remained around $30 billion, with the highest value being $35 billion (1972 dollars) in 1974. After reaching another peak of $34 billion (1972 dollars), the value of shipments declined to a 23-year low of about $18 billion (1972 dollars). This result reflected conditions in the steel industry. In 1982, the steel industry sustained record financial losses close to $3.2 billion (1982 dollars).[23] In 1983, an additional $3.6 billion was lost.[24]

For SIC 3312, Table 9-5 shows the value added by manufacture, the total number of employees, and the value added per employee. Current and constant (1972) dollar figures are included. Both the total value added by manufacture and the value added per employee peaked in 1974, the same year in which the value of shipments for this industry was the highest. The increasing value added per employee might indicate that this industry is changing to a more capital-intensive production process. This aspect is discussed in Section 9.1.6.

TABLE 9-3. COKE PRODUCTION IN THE WORLD[6 17 18]

Year	World production[a] (10^6 Mg)	U.S. production (10^6 Mg)	U.S. production as a share of world production (%)
1950	182.3	65.9	36.1
1951	204.1	71.9	35.2
1952	208.9	62.0	29.7
1953	225.6	71.5	31.7
1954	211.5	54.4	25.7
1955	242.3	68.3	28.2
1956	256.8	67.6	26.3
1957	266.1	69.0	25.9
1958	255.0	48.6	19.1
1959	260.4	50.7	19.5
1960	279.7	51.9	18.6
1961	272.0	46.9	17.2
1962	272.9	47.1	17.3
1963	281.7	49.3	17.5
1964	298.5	56.4	18.9
1965	310.3	60.7	19.6
1966	310.4	61.2	19.7
1967	303.9	58.6	19.3
1968	315.8	57.8	18.3
1969	335.8	58.8	17.5
1970	350.5	60.3	17.2
1971	342.7	52.1	15.2
1972	340.5	54.9	16.1
1973	365.8	58.4	16.0
1974	367.4	55.9	15.2
1975	363.3	51.9	14.3
1976	367.2	52.9	14.4
1977	373.5	48.5	13.0
1978	364.7	44.5	12.2
1979[b]	341.0	48.0	14.1

[a]Oven and beehive coke combined.

[b]Information on world coke production not available after 1979.

TABLE 9-4. VALUE OF SHIPMENTS, SIC 3312[2 19 20 21 22]

Year	Current dollars (10^6)	1972 Dollars (10^6)
1960	15,738.8	22,981.7
1961	14,873.3	21,468.4
1962	15,571.6	22,071.7
1963	16,418.0	22,933.4
1964	18,840.1	25,914.9
1965	20,841.7	28,043.2
1966	21,193.9	27,610.6
1967	19,620.6	24,829.9
1968	21,161.1	25,628.1
1969	22,299.0	25,713.8
1970	21,501.6	23,535.0
1971	21,971.3	22,882.0
1972	23,946.7	23,946.7
1973	30,365.5	28,700.9
1974	41,671.7	35,917.7
1975	35,659.8	28,038.8
1976	39,684.1	29,643.8
1977	41,897.8	29,645.4
1978	49,055.4	32,879.0
1979	55,695.8	34,358.9
1980	50,303.9	28,244.8
1981	57,472.9	29,473.3
1982	36,931.9	17,884.7

TABLE 9-5. VALUE ADDED, SIC 3312[2 19 20 21 22]

Year	Value added by manufacture		Employees (10^3)	Value added per employee--1972 dollars (10^3)
	Current dollars (10^6)	1972 Dollars (10^6)		
1960	6,844.4	9,965.6	550.0	18.1
1961	6,546.3	9,449.0	503.4	18.8
1962	6,620.9	9,384.7	502.2	18.7
1963	7,506.4	10,485.3	500.5	20.9
1964	8,479.6	11,663.8	532.9	21.9
1965	9,379.8	12,620.8	565.4	22.3
1966	9,643.6	12,563.3	559.4	22.5
1967	8,910.1	11,275.8	533.1	21.2
1968	9,275.8	11,233.9	533.1	21.1
1969	9,853.2	11,362.1	537.7	21.1
1970	9,350.5	10.234.8	526.5	19.4
1971	9,563.1	9,959.5	482.2	20.7
1972	10,304.7	10,304.7	469.1	22.0
1973	12,769.4	12,069.4	502.1	24.0
1974	17,425.8	15,019.7	518.0	29.0
1975	13,356.2	10,501.8	451.3	23.3
1976	14,755.5	11,022.3	451.9	24.4
1977	15,021.4	10,628.6	441.4	24.1
1978	19,085.7	12,792.0	443.5	28.8
1979	21,039.0	12,979.0	451.2	28.8
1980	18,632.2	10,461.6	402.9	26.0
1981	20,100.2	10,307.8	390.3	26.4

9.1.2 Production

9.1.2.1 Product Description. There are two types of coke: furnace coke and foundry coke. Furnace coke is used as a fuel in blast furnaces; foundry coke is used as a fuel in the cupolas of foundries. Coke is also used for other miscellaneous processes such as residential and commercial heating. In 1983, only 3 percent of all coke used in the United States was used for these miscellaneous purposes, 92 percent was used in blast furnaces, and the remaining 5 percent was used in foundries.[25] Time-series data for the percent of total U.S. consumption attributable to each use from 1950 to 1980 are shown in Figure 9-1.

9.1.2.2 Production Technology. Coke is typically produced from coal in a regenerative type of oven called the by-product oven. The type of coal used in coke production and the length of time the coal is heated (coking time) determine the end use of the coke. Both furnace and foundry coke are usually obtained from the carbonization of a mixture of high- and low-volatile coals. Generally, furnace coke is obtained from a coal mix of 10 to 30 percent low-volatile coal and is coked an average of 18 hours, and foundry coke is obtained from a mix of 50 percent or more low-volatile coal and is coked an average of 30 hours.

The first by-product oven in the United States was built in 1892 to produce coke and to obtain ammonia to be used in the production of soda ash. In such ovens, the by-products of carbonization (such as ammonia, tar, and gas) are collected instead of being emitted into the atmosphere as they were in the older, beehive ovens.

The total amount of coke that can be produced each year is restricted by the number of ovens in operation for that year, and not all ovens are in operation all of the time. Oven operators try to avoid closing down a group of ovens for any reason because of the time and energy lost while the ovens cool and reheat and because of the oven deterioration that results from cooling and reheating. However, it is estimated that at any time, approximately 5 to 10 percent of existing coke oven capacity is out of service for rebuilding or repair.[28] In a report written for the Department of Commerce, Father William T. Hogan estimated the potential annual maximum capacity of U.S. oven coke plants as of July 31, 1979.[29] Hogan assumed

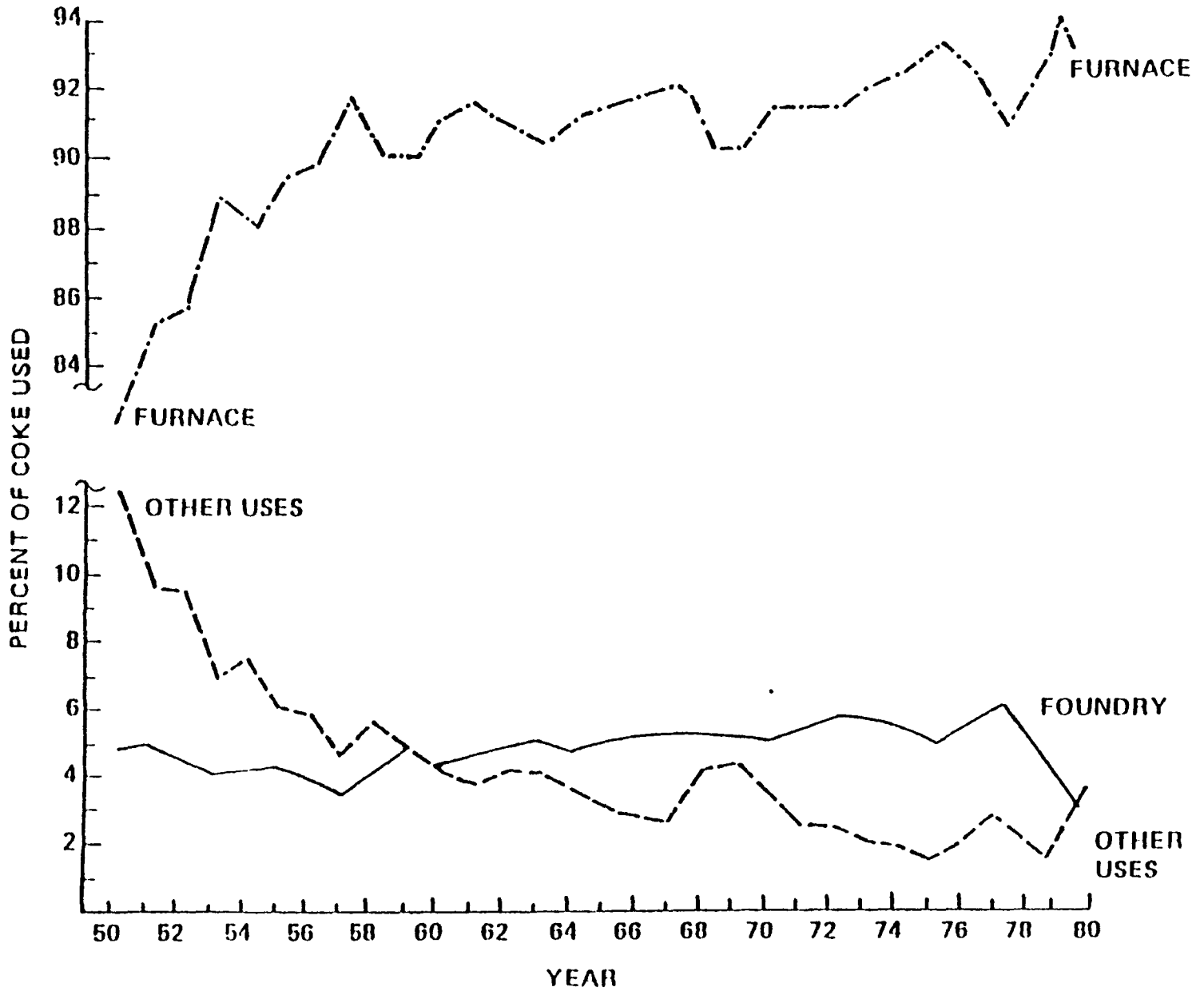

Figure 9-1. Uses of oven coke as percents of total coke consumption.[6,26,27]

that almost 10 percent of his estimate of total capacity would be out of service at any given time; therefore, he subtracted the out-of-service capacity from total capacity to obtain maximum annual capacity. The actual number of ovens which are out of service in a given year varies greatly. In December, 1983, 112 of 6,978 ovens, or 1.6 percent were being rebuilt or repaired, and annual capacity totaled 35,575,000 Mg.[30] In November 1984, 1,756 of 8,204 ovens or 21.4 percent were out of service, and annual capacity totaled 51,180,000 Mg.[5] Table 9-6 presents the data for November 1984.

In actuality, ovens which are removed from service and placed on "hot idle" status are those likely to be returned to production in the short term. Ovens which are placed on "cold idle" status are less likely to be returned to service and, historically, have not been returned to service. The capacity of these ovens is included in a plant's total capacity for bookkeeping purposes even though the ovens may be scheduled for demolition.[31]

Within the limits of the number of ovens available for coking, both furnace and foundry coke production levels vary. Some ovens that produce furnace coke can be switched to produce foundry coke by changing the coal mix and increasing the coking time. Furthermore, some ovens that produce foundry coke could be changed to produce furnace coke by changing the coal mix and decreasing the coking time. Also, some variation in the combination of flue temperature and coking time is possible for either type of coke. A shorter coking time results in greater potential annual production.

9.1.2.3 Factors of Production. Table 9-7 provides a typical labor and materials cost breakdown for furnace coke production. Coal is the major material input in the production of coke. In 1979, greater than 61 percent of the coal received by coke plants was from mines that were company owned or affiliated.[33] In this same year, 14 States shipped some coal to coke plants outside their borders.[34] Of the coal received by domestic coke plants, over 81 percent came from West Virginia, Kentucky, Pennsylvania, and Virginia.[34] Any potential adverse impact on the coke industry probably will have some impact in these States. A total of 33.6 million megagrams of bituminous coal was carbonized in 1983.[35]

TABLE 9-6. MAXIMUM ANNUAL CAPACITY OF OVEN COKE PLANTS IN THE UNITED STATES IN NOVEMBER, 1984[5]

	Number of batteries	Number of ovens	Capacity (Mg)
In existence			
Furnace plants	105	6,638	44,810,000
Foundry plants	35	1,566	6,370,000
Total	140	8,204	51,180,000
Out of service[a]			
Furnace plants	(25)	(1,646)	(9,828,000)
Foundry plants	(2)	(110)	(402,000)
Total	(27)	(1,756)	(10,230,000)
In operation[b]			
Furnace plants	80	4,992	34,982,000
Foundry plants	33	1,456	5,968,000
Total	113	6,448	40,950,000

[a]Batteries and ovens down for rebuilding and repair, or on cold idle prior to permanent closure.

[b]Defined as "online" or "on hot idle."

TABLE 9-7. TYPICAL COST BREAKDOWNS: FURNACE COKE PRODUCTION AND HOT METAL (BLAST FURNACE) PRODUCTION[32]

Furnace coke production	
Labor and materials	Percent of cost
Coking coal	77.1
Coal transportation	9.4
Labor (operation and maintenance)	6.6
Maintenance materials	6.9
Total labor and material costs	100.0

Hot metal production	
	Percent of cost
Charge metallics	42.5
Iron ore	(6.3)
Agglomerates	(33.3)
Scrap	(2.9)
Fuel inputs	44.8
Coke	(41.8)
Fuel oil	(3.0)
Limestone fluxes	0.7
Direct labor	7.6
Maintenance	1.5
General expenses	2.9
Total labor and material costs	100.0

Table 9-8 shows employment in the by-product coke industry from 1950 to 1970 and the percentage of total SIC 3312 employees in the by-product coke industry. This table shows decreasing employment in the by-product coke industry. A similar decline in employment has occurred in SIC 3312. Unfortunately, employment data for the by-product coke industry are not available after 1970; however, these figures can be estimated by regressing employment in the by-product coke industry on total iron and steel industry employment and on the ratio of coke used in steel production.* These estimates are also shown in Table 9-8.

9.1.3 Demand and Supply Conditions

Domestic consumption of coke from 1950 to 1980 is graphed in Figure 9-2. In the early 1950's, the amount of coke consumption was fairly large; an average of 65 million megagrams was consumed annually between 1950 and 1958. The late 1950's and early 1960's showed a sharp decrease in coke consumption, with an average of only 48 million megagrams consumed annually. Domestic consumption of coke increased during the mid-1960's to mid-1970's to an annual figure of 57 million megagrams but it did not reach the 1950 to 1957 level. The late 1970's showed another slump in coke consumption.

The variation in coke consumption shown in Figure 9-2 has both cyclic and trend components. The demand for coke is derived from demands for iron and steel products, and these demands are sensitive to the performance of the overall economy. Cycles in coke demand are linked to cycles in aggregate demand or cycles in demand for particular products such as automobiles.

The trend component in coke consumption results from changes in blast furnace production techniques. Coke is used as a fuel in blast furnaces, but it is not the only fuel that can be used. Coke oven gas, fuel oil, tar and pitch, natural gas, and blast furnace gas have all been used as supplements to coke in heating the blast furnaces. The increased use of these supplemental fuels over the past 20 years has caused the amount of coke used per ton of pig iron produced (the coke rate) to decrease. Other causes of the decline in coke rate are increased use of oxygen in the blast furnaces and use of higher metallic content ores. Table 9-9 shows U.S. pig

*Regressions performed by Research Triangle Institute in 1980 and 1985.

TABLE 9-8. EMPLOYMENT IN THE BY-PRODUCT COKE INDUSTRY[36]

Year	Number of employees	Percentage of all employees in SIC 3312
1950	20,942	NA
1951	22,058	NA
1952	21,919	NA
1953	21,011	NA
1954	17,944	NA
1955	19,595	NA
1956	19,318	NA
1957	19,203	NA
1958	15,654	3.06
1959	15,865	3.13
1960	15,779	2.87
1961	13,106	2.60
1962	12,723	2.53
1963	12,696	2.54
1964	13,021	2.44
1965	14,003	2.48
1966	13,745	2.46
1967	13,662	2.56
1968	14,136	2.65
1969	13,617	2.53
1970	13,997	2.66
1971[a]	11,955	2.48
1972	11,127	2.37
1973	11,121	2.21
1974	11,207	2.16
1975	12,109	2.68
1976	11,047	2.44
1977	10,196	2.31
1978	10,578	2.38
1979	10,477	2.32
1980	9,673	2.40
1981	8,846	2.27
1982	6,778	2.28

NA = Not applicable.

[a]Figures for 1971-1982 are estimates. See text for more detail.

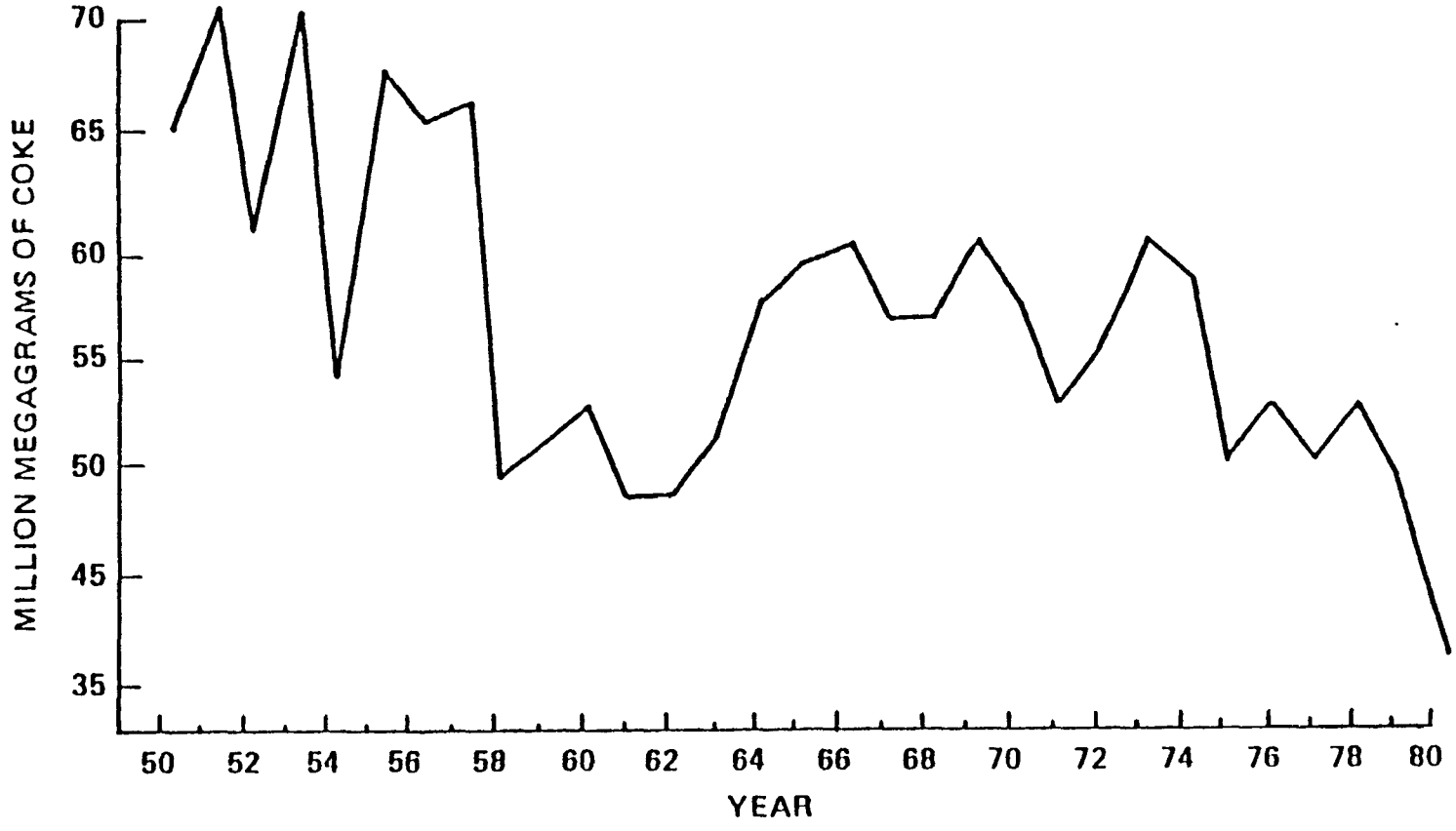

Figure 9-2. U.S. apparent consumption of coke.[6,26]

TABLE 9-9. COKE RATE[3 18 25 37 38]

Year	Pig iron production (10^3 Mg)	Coke used in blast furnaces (10^3 Mg)	Coke rate
1950	58,514	51,403	0.86
1951	63,756	55,362	0.87
1952	55,618	49,386	0.89
1953	67,906	58,880	0.87
1954	52,570	46,861	0.89
1955	69,717	60,675	0.87
1956	68,067	58,279	0.86
1957	71,128	60,861	0.86
1958	51,851	42,898	0.83
1959	54,622	44,107	0.81
1960	60,329	46,462	0.77
1961	58,834	42,855	0.73
1962	59,546	42,298	0.71
1963	65,173	44,596	0.68
1964	77,527	51,076	0.66
1965	80,021	53,576	0.67
1966	82,815	54,653	0.66
1967	78,744	51,300	0.65
1968	80,529	51,399	0.64
1969	86,186	55,065	0.64
1970	82,820	54,754	0.66
1971	73,829	48,269	0.65
1972	80,628	50,214	0.62
1973	91,915	54,791	0.60
1974	86,616	51,154	0.59
1975	72,322	44,375	0.61
1976	79,788	47,678	0.60
1977	73,931	44,292	0.60
1978	79,552	47,889	0.60

(continued)

TABLE 9-9 (continued)

Year	Pig iron production (10^3 Mg)	Coke used in blast furnaces (10^3 Mg)	Coke rate
1979	78,926	45,862	0.58
1980	62,325	37,583	0.60
1981	66,951	37,832	0.56
1982	39,282	21,918	0.56
1983	46,267	25,009	0.54

iron production, coke consumed in the production of pig iron, and the coke rate for 1950 to 1983. (Data limitations make it difficult to calculate the foundry coke rate in cupola production.)

Recently, there has been some concern about the ability of the United States' coke-making capacity to support domestic steel production--the major source of coke demand. The study conducted by Hogan and Koelble of the Industrial Economics Research Institute at Fordham University indicates that in 1978, U.S. production of coke was 14.1 percent below domestic consumption.[39] Imports increased dramatically in that same year. Hogan and Koelble attributed this decline in coke production to the abandonment of coke ovens for environmental reasons and predicted a severe coke shortage by 1982.[40] This prediction was disputed in a Merrill Lynch Institutional Report by Charles Bradford. The Bradford report attributed the lack of adequate U.S. coke production in 1978 to two factors: (1) a coal miner's strike, which caused the drawing down of stocks of coke when they should have been increasing, and (2) the premature closing because of EPA regulation of some coke ovens that normally would have been replaced before they were closed.[41] The Bradford report stated that a survey of U.S. steel producers revealed that all of the major steel producers were or soon would be self-sufficient with regard to coke-making capacity.[42] The Bradford explanation of 1978 coke imports seems more reasonable because 1979 coke imports decreased about 1.6 million megagrams compared to the 1978 level.

The following values describe the situation in the 1980s with respect to production, imports, and apparent consumption of coke (thousand megagrams).[16]

Year	Production	Imports	Consumption	Distributor Stock
1980	41,851	598	37,447	7,009
1981	38,815	478	39,975	5,556
1982	25,506	109	23,384	7,141
1983	23,413	32	27,080	4,024
1984*	14,446	248	14,886	2,776

*Two quarters of 1984

Production is less than apparent consumption in 1981, 1983, and 1984. For each of these years, stocks and imports more than accommodate the short-

fall. Coke producers were operating at 80 percent of total capacity in November 1984.[5] Thus, it is unlikely that major shortages will develop in the near future; in fact, unless there is a turnaround in the steel industry, surpluses appear more likely.

9.1.4 Market Structure

Market power, the degree to which an individual producer or groups of producers can control market price, is of particular economic importance. Market structure is an important determinant of market power. Pricing behavior is relevant to the choice of the methodology used in assessing the potential impacts of new regulations. It is important to determine if the competitive pricing model (price equal to marginal cost) adequately describes pricing behavior for coke producers.

Any analysis of market structure must consider the characteristics of the industry. This analysis addresses the number of firms producing coke; the concentration of production in specific firms; the degree of integration in coke production; the availability of substitutes for coke; and the availability of substitutes for the commodities for which coke is an input to production. Also, some information on past pricing in the coke industry is presented. These topics will be considered together with financial performance (Section 9.1.5) and trends (Section 9.1.6) in assessing market behavior (Section 9.1.7).

9.1.4.1 Concentration Characteristics and Number of Firms. This section describes various concentration measures that can be computed for the furnace and foundry coke industries. Normally, concentration ratios are used as an indication of the existence of market power. While concentration ratios are a useful tool for describing industry structure, concentration should not be used as an exclusive measure of market power. Many other factors (e.g., availability of substitutes, product homogeneity, ease of market entry) determine a firm's ability to control market price.

As of November, 1984, 23 companies operated by-product coke ovens.[5 43] Twelve companies are integrated iron and steel producers; 11 companies are merchant firms. These companies owned and operated a total of 51 coke plants; 36 of these plants were captive and 15 of them were merchant. A list of these companies, their plant locations, the major uses of coke at

each plant, and plant coke capacities is given in Table 9-10. A plant site may include more than one complete plant.

Reported capacities in Table 9-10 are maximum, nominal figures, which do not include any allowance for outage like that determined for the overall industry in Table 9-6. All but one of the largest plants are captive, and most of the merchant plants have very small capacities. Furnace coke production is concentrated in captive plants. Virtually all of the coke used in foundries and in other industries was produced by merchant plants. If coke plant sites were ranked according to capacity, the top five plant sites and top ten plant sites would have 37.1 percent and 54.6 percent of total coke capacity, respectively.

By-product coke plants are concentrated in the States bordering on the Ohio River, probably because of the coal in that area. Pennsylvania contains 12 plants, and Ohio and Indiana each have 8 plants.[5]

Table 9-11 divides the United States into 11 coke-consuming and coke-producing regions and shows the amount of coke produced in each region and the locations of coke consumption in 1977. Most of the regions produce the bulk of the coke they consume; only three regions produced less than 80 percent of their own consumption and only one produced more than it needed for its own consumption. Transportation of coke across long distances is avoided whenever possible to reduce breakage of the product into smaller, less valuable pieces and to minimize freight charges.[46]

The concentration of production or capacity in specific firms may have economic importance. Table 9-12 presents the percent of total capacity owned by the largest four (of 23) firms. The four-firm concentration ratio for the coke industry has increased over the years. In 1959, the four-firm concentration ratio was 53.5 (the top four firms owned 53.5 percent of total capacity)[47]; in 1984 it was 69.9 percent. Consolidation of the industry through mergers, acquisitions, and closures has encouraged this trend.

In the preceding discussion, furnace and foundry coke production are considered jointly. However, each existing coke battery may be considered a furnace or foundry coke producer, based on the battery's primary use. Separate capacity-based concentration ratios for the two types of coke are

TABLE 9-10. COKE PLANTS IN THE UNITED STATES, November 1984[5 44]

Company name	Plant location	Classification of plant	Major uses of coke[a]	Coke capacity (10^3 Mg/yr)
Armco, Inc.	Ashland, KY	Captive	Blast furnace	963
	Middletown, OH (2)[b]	Captive	Blast furnace	1,776
Bethlehem Steel Corp.	Bethlehem, PA	Captive	Blast furnace	2,253
	Burns Harbor, IN	Captive	Blast furnace	1,790
	Lackawanna, NY	Merchant	Blast furnace	1,292
	Sparrows Point, MD	Captive	Blast furnace	3,506
Rouge Steel	Dearborn, MI	Captive	Blast furnace	778
Inland Steel Co.	E. Chicago, IN (3)	Captive	Blast furnace	3,715
Interlake, Inc.	Chicago, IL	Captive	Blast furnace	582
The LTV Steel Corp.	Aliquippa, PA[c]	Captive	Blast furnace	1,218
	Cleveland, OH (2)	Captive	Blast furnace	1,760
	E. Chicago, IN	Captive	Blast furnace	948
	Gadsden, AL	Captive	Blast furnace	758
	Pittsburgh, PA	Captive	Blast furnace	1,792
	S. Chicago, IL	Captive	Blast furnace	563
	Thomas, AL	Captive	Blast furnace	315
	Warren, OH	Captive	Blast furnace	945
Lone Star Steel Co.[d]	Lone Star, TX	Captive	Blast furnace	507
National Steel Corp.[e]	Granite City, IL	Captive	Blast furnace	868
	Detroit, MI	Captive	Blast furnace	1,397
Weirton Steel Corp.	Brown's Island, WV	Captive	Blast furnace	1,097
New Boston Coke Corp.[f]	Portsmouth, OH	Captive	Blast furnace	364

(continued)

TABLE 9-10 (continued)

Company name	Plant location	Classification of plant	Major uses of coke[a]	Coke capacity (10^3 Mg/yr)
U.S. Steel Corp.	Clairton, PA (4)	Captive	Blast furnace	5,294
	Fairfield, AL	Captive	Blast furnace	1,822
	Fairless Hills, PA	Captive	Blast furnace	916
	Gary, IN	Captive	Blast furnace	4,228
	Lorain, OH	Captive	Blast furnace	1,496
	Provo, UT	Captive	Blast furnace	1,160
Wheeling-Pittsburgh[g] Steel Corp.	E. Steubenville, WV	Captive	Blast furnace	1,509
	Monessen, PA	Captive	Blast furnace	490
Jim Walter Corp.	Birmingham, AL	Merchant	Blast furnace, foundry	499
Koppers Co., Inc.	Erie, PA	Merchant	Foundry, other industrial	207
	Toledo, OH	Merchant	Foundry	157
	Woodward, AL	Merchant	Blast furnace, foundry	563
Shenango, Inc.	Neville Island, PA	Merchant	Blast furnace, foundry	521
Alabama By-Products Corp.	Tarrant, AL	Merchant	Foundry, other industrial[h]	583
	Keystone, PA	Merchant	Foundry	402
Carondelet Coke Corp.	St. Louis, MO	Merchant	Foundry, other industrial	330
Chattanooga Coke and Chemical Co., Inc.[i]	Chattanooga, TN	Merchant	Foundry, other industrial	130
Citizens Gas and Coke Utility	Indianapolis, IN	Merchant	Foundry	477

(continued)

TABLE 9-10 (continued)

Company name	Plant location	Classification of plant	Major uses of coke[a]	Coke capacity (10^3 Mg/yr)
Detroit Coke Corp.	Detroit, MI	Merchant	Foundry	617
Empire Coke Co.	Holt, AL	Merchant	Foundry	161
Indiana Gas and Chemical Corp.	Terre Haute, IN	Merchant	Foundry, other industrial	132
Tonawanda Coke Corp.	Buffalo, NY	Merchant	Foundry	299

[a]An end use is considered a major use if it is at least 20 percent of the plant's total distribution of coke.

[b]Numbers in parentheses indicate the number of plants at that location. If no number is indicated, only one plant exists at that location.

[c]LTV announced its intention in May 1985 to reduce production of steel at the Aliquippa, Pennsylvania plant. The plant may convert to a cold-idle status eventually.

[d]Northwest Industries, Inc., the parent company of Lone Star Steel, announced in April 1985 its merger with Farley Industries.

[e]A merger between National Intergroup, Inc., the parent company of National Steel Corp., and Bergen Brunswig Corp. fell through in April 1985, two weeks before its scheduled date. Some market consultants feel that National Intergroup, Inc., is now a potential target for corporate raiders.

[f]McLouth Steel Corp., the parent company of New Boston Coke Corp., is operating under Chapter 11 filed in 1981.

[g]Wheeling-Pittsburgh Steel Corp. filed for Chapter 11 in April 1985.

[h]Residential and commercial heating included in other industrial category.

[i]Chattanooga Coke and Chemical Co., Inc., is operating under Chapter 11 filed in March 1984.

TABLE 9-11. INTERREGIONAL COKE SHIPMENTS IN 1977[45]
(10^3 megagrams)

Producing region	Consuming region											
	AL	CA, UT CO	MD, NY	IL	IN	KY, MO, TN, TX	MI	MN, WI	OH	PN	VA, WV	Total
Alabama	2,228	27	10	81	112	465	195	7	114	1	51	3,361
California, Colorado, Utah	0	2,668	0	0	0	0	0	0	0	0	0	2,668
Maryland, New York	0	3	4,392	123	0	22	88	0	6	8	0	4,642
Illinois	0	0	0	1,424	0	0	0	0	0	0	0	1,424
Indiana	0	5	0	69	7,594	35	97	11	62	3	0	7,876
Kentucky, Missouri, Tennessee, Texas	14	18	0	15	5	928	125	0	13	0	20	1,138
Michigan	0	0	0	0	7	1	2,639	0	6	0	0	2,653
Minnestoa, Wisconsin	0	6	0	269	70	1	61	158	5	1	0	571
Ohio	0	4	0	138	366	379	260	0	6,356	2	12	7,517
Pennsylvania	9	0	51	1,241	134	3	52	0	1,370	10,257	3	13,120
Virgina, West Virginia	0	0	0	0	0	8	412	0	0	214	2,465	3,099
TOTAL	2,251	2,731	4,453	3,360	8,288	1,842	3,929	176	7,932	10,556	2,551	48,069

TABLE 9-12. PERCENT OF COKE CAPACITY OWNED BY TOP FIRMS (NOVEMBER, 1984)[5]

Firm	Capacity (10^3 Mg)	Percent of total capacity
U.S. Steel, Inc.	14,916	29.14
Bethlehem Steel Corp.	8,841	17.27
The LTV Steel Corp.	8,299	16.22
Inland Steel Co.	3,715	7.26
Sum of largest four firms	35,771	69.89

calculated based on this allocation. The 1984 four-firm concentration ratio for furnace coke is 75.4; the 1984 four-firm ratio for foundry coke is 65.2.[5]

Concentration in the steel industry has economic relevance because a large fraction of all furnace coke is produced by integrated iron and steel companies. Historically, the eight largest steel producers have been responsible for approximately 75 percent of industry production. However, from 1950 to 1976, the share of production attributable to the top four firms declined from 62 percent to 53 percent.[48] In 1981, the seven largest steel companies produced about 70 percent of steel made in the United States.[49]

In summary, concentration exists in the production of both types of coke and in steel production. However, the concentration is probably not sufficient to guarantee market power, and many companies are involved in the production of both coke and steel products. Other factors must be considered in any final assessment of market power.

9.1.4.2 Integration Characteristics. When one firm carries out activities that are at separate stages of the same productive process, especially activities that might otherwise be performed by separate firms, that firm is said to be vertically integrated. Through vertical integration, the firm substitutes intrafirm transfers for purchases from suppliers and/or sales to distributors. A firm may seek to supply its own materials inputs to ensure a stable supply schedule or to protect itself from monopolistic suppliers. The firm may seek to fabricate further or distribute its own products to maintain greater control over the consuming markets or to lessen the chance of being shut out of the market by large buyers or middlemen. Therefore, the presence of vertical integration may constitute a firm's attempt to control costs or ensure input supplies. Vertical integration does not guarantee market power (control over market price).

Many coke-producing firms, especially furnace coke producers, are vertically integrated enterprises. As previously mentioned, 36 of the existing coke plants are captive; i.e., they are connected with blast furnaces and/or steel mills. In addition, many coke firms own coal mines, and greater than 61.0 percent of the coal used in ovens was from captive

mines in 1979.[33] Assurance of coal supply to coke production and coke supply to pig iron production appears to be the motivation behind such integration.

One implication of vertical integration is that much of the furnace coke used in the United States never enters the open market--it is consumed by the producing company. Accordingly, the impact analysis for furnace coke (Section 9.2.2) uses an implied price for furnace coke based on its value in producing steel products, which are transferred on the open market.

9.1.4.3 Substitutes. Substitutes for a given commodity reduce the potential for market power in production of the commodity. The substitution of other inputs for coke in blast furnaces is somewhat limited, but not totally unfeasible. In addition, electric arc furnaces, which do not require coke, are becoming increasingly important in steel production. The trend toward electric arc furnaces and mini-mills has eased entry into the iron and steel industry, which in turn reduces market power.

Imported coke can also be substituted for domestically produced coke. In fact, although U.S. iron and steel producers prefer to rely on domestic sources of coke, coke imports have increased most recently. If the cost of domestic coke increased substantially compared to the cost of imported coke, U.S. iron and steel producers might attempt to increase imports even more. Correspondingly, if costs of imported coke are reduced due to improved foreign technology and productivity, reductions in foreign labor cost, or other reasons, imports might become more desirable.

Furthermore, substitutes exist for the final products (iron and steel) to which coke is an input. Increases in the price of coke and the resulting increases in the price of iron and steel products can lead to some substitution of other materials for iron and steel, which also reduces market power in the production of coke. Analagous substitutions for foundry coke are possible, and cupola production of ferrous products, which uses foundry coke, has competition from electric arc furnaces that do not use coke. Hence, there is a technological substitute for foundry coke in the manufacture of ferrous products. Furthermore, imported foundry coke can be substituted for domestic foundry production. In conclusion, some substitution for coke is possible in the manufacture of both steel and ferrous products.

9.1.4.4 Pricing History. As previously indicated, a significant portion of all U.S. coke production is not traded on the market. However, the Bureau of Mines and the Energy Information Administration collect annual data on coke production and consumption and give the quantity and the total value of coke consumed by producing industries, sold on the open market, and imported. Dividing total value by quantity yields an average price for each of these categories. Time-series data on these three average values are given in Table 9-13. (Furnace and foundry coke are combined in these figures.)

Also shown in Table 9-13 are data on the average value of coal that is carbonized in coke ovens. An examination of coke and coal prices reveals that increases in coal prices generally coincide with increases in coke prices. In fact, only 3 years show an increase in the price of coal that was not accompanied by an increase in the price of the two categories of coke. Although it is impossible to conclude from this trend that individual firms have market power, it indicates that the industry can pass through some increases in costs.

9.1.4.5 Market Structure Summary. Although there is no perfect method for measuring the extent of market power, the preceding sections addressed four characteristics used to measure the potential for market power--concentration, integration, substitution, and historical price trends. Concentration statistics indicated that some potential for market power exists in the coke industry, yet, these statistics are not conclusive proof. Similarly, vertical integration in the steel industry is not conclusive in identifying the presence of market power because vertical integration is a method of controlling the cost and ensuring the quality and supply of inputs. Finally, the possibility of substitution represents a strong argument against the existence of extensive market power in the coke-making industry.

9.1.5 Financial Performance

Financial data on the coke-producing firms or their parent firms, including captive and merchant furnace and foundry producers, are shown in Table 9-14. Firms for which data are not available are noted.

TABLE 9-13. COMPARISON OF COAL PRICES AND DOMESTIC AND IMPORTED COKE PRICES[6 50 51 52 53]

	Average value of coal carbonized in coke ovens[a,b] ($/Mg)	Average value of oven coke used by producers[a] ($/Mg)	Average value of oven coke sold commercially[a] ($/Mg)	Average value of imported coke[a,c] ($/Mg)
1950	9.56	14.26	14.54	13.34
1951	9.85	14.50	15.72	13.17
1952	10.17	15.11	17.63	15.96
1953	10.19	15.36	17.96	12.02
1954	9.92	17.33	18.95	11.98
1955	9.74	17.90	18.52	12.26
1956	10.31	19.39	20.27	12.38
1957	10.92	19.98	21.51	14.43
1958	10.90	19.82	21.90	14.25
1959	10.89	19.16	23.03	12.89
1960	10.90	19.92	22.32	13.06
1961	10.79	19.12	23.30	13.44
1962	10.86	19.53	23.36	14.42
1963	10.46	18.88	23.24	14.78
1964	10.23	19.17	22.85	16.10
1965	10.48	17.89	23.90	16.95
1966	10.78	18.40	24.49	20.60
1967	11.05	18.58	24.99	20.41
1968	11.03	19.57	24.25	22.31
1969	11.49	21.54	27.01	21.36
1970	13.46	30.30	33.04	25.46
1971	15.43	32.86	41.29	31.93
1972	17.34	35.76	44.87	27.70
1973	20.19	41.34	47.31	40.16
1974	40.22	82.32	72.47	60.14
1975	48.73	92.84	96.61	94.84
1976	48.68	93.83	104.01	93.35
1977	50.99	90.57	111.95	--
1978	57.37	105.79	118.03	--
1979	55.88	117.39	107.54	94.32
1980	62.09	123.42	113.24	87.12
1981	69.29	125.52	124.34	89.59
1982	71.62	131.24	126.24	84.61
1983	65.36	124.57	124.67	61.45

[a]Both furnace and foundry coke and the coals used to produce furnace and foundry coke are included in these figures.

[b]Market value at the oven (current dollars).

[c]General customs value as reported by the Department of Commerce (current dollars).

TABLE 9-14. FINANCIAL INFORMATION ON COKE-PRODUCING FIRMS, 1983
(million 1983 dollars)[a] [54] [55] [56] [57]

Company name[b]	Net sales	EBIT[c]	Cash flow[d]
Armco, Inc.	4,165	(526)	70
Bethlehem Steel Corp.	4,898	(239)	129[g]
Ford Motor Co. (Rouge Steel)	44,455	2,166	5,542
Inland Steel Co.	3,046	(177)	106[g]
Interlake, Inc.	835	38	67
The LTV Steel Corp.	4,578	(252)	(164)[g]
McLouth Steel Corp.[i,j] (New Boston Coke Corp.)	11	(0.09)	k
National Intergroup, Inc.[l] (National Steel Corp.)	2,993	(177)	161
Northwest Industries[m] (Lone Star Steel Co.)	1,608	(104)	154[g]
Shenango Furnace Co., Inc.[n,o] (Shenango, Inc.)	145	k	k
U.S. Steel Corp.	16,869	(1,208)	1,563[g]
Weirton Steel Corp.[p]	1,000	k	k
Wheeling-Pittsburgh Steel Corp.[q]	772	(72)	(70)[g]
Jim Walter Corp.[n]	2,025	113	159
Koppers Co., Inc.[n]	1,566	42	174[g]
Alabama Byproducts Corp.	229	k	192
Carondelet Coke Corp.[r]	k	k	k
Chattanooga Coke and Chemicals Co., Inc.[s]	17	k	k
Citizens Gas and Coke Utility	316	k	91
Detroit Coke Corp.[r,t]	k	k	k
Indiana Gas and Chemical Corp.	64	(0.2)	k
McWane, Inc. (Empire Coke Co.)	k	k	k
Tonawanda Coke Corp.[r]	k	k	k

(continued)

TABLE 9-14 (continued)

Company name[b]	Net working capital[e]	Current assets	Current liabilities
Armco, Inc.	563	1,576	1,013
Bethlehem Steel Corp.	271	1,259	988
Ford Motor Co. (Rouge Steel)	503	10,819	10,316
Inland Steel Co.	233	789	556
Interlake, Inc.	203	378	175
The LTV Steel Corp.	538	1,848	1,310
McLouth Steel Corp.[i,j] (New Boston Coke Corp.)	(10)	2	12
National Intergroup, Inc. (National Steel Corp.)	252	875	623
Northwest Industries (Lone Star Steel Co.)	338	762	424
Shenango Furnace Co., Inc.[n,o] (Shenango, Inc.)	16	43	27
U.S. Steel Corp.	789	4,298	3,509
Weirton Steel Corp.[p]	147	332	185
Wheeling-Pittsburgh Steel Corp.[q]	102	343	241
Jim Walter Corp.[n]	136	1,594	1,458
Koppers Co., Inc.[n]	282	527	245
Alabama Byproducts Corp.	50	73	23
Carondelet Coke Corp.[r]	k	k	k
Chattanooga Coke and Chemicals Co., Inc.[s]	k	k	k
Citizens Gas and Coke Utility	20	82	62
Detroit Coke Corp.[r,t]	1	13	12
Indiana Gas and Chemical Corp.	2	13	11
McWane, Inc. (Empire Coke Co.)	48	58	10
Tonawanda Coke Corp.[r]	k	k	k

(continued)

TABLE 9-14 (continued)

Company name[b]	Annual interest expense	Total assets	Long term debt	Tangible net worth[f]
Armco, Inc.	154	3,609	832	1,213
Bethlehem Steel Corp.	104	4,457	1,134	1,088
Ford Motor Co.	567	23,869	2,713	7,545
Inland Steel Co.	68	2,626	788	1,118
Interlake, Inc.	12	674	116	314
The LTV Steel Corp.	171	4,406	1,560	985
McLouth Steel Corp.[i,j] (New Boston Coke Corp.)	k	11	3	(4)
National Intergroup, Inc. (National Steel Corp.)	62	2,649	606	875
Northwest Industries (Lone Star Steel Co.)	63	1,811	451	530
Shenango Furnace Co., Inc.[n,o] (Shenango, Inc.)	k	k	10	73
U.S. Steel Corp.	1,074	19,314	7,164	4,570
Weirton Steel Corp.[p]	k	357	149	k
Wheeling-Pittsburgh Steel Corp.[q]	58	1,241	514	247
Jim Walter Corp.[n]	140	2,609	1,151	717
Koppers Co., Inc.[n]	26	1,175	233	554
Alabama Byproducts Corp.	6	243	52	243
Carondelet Coke Corp.[r]	k	k	k	k
Chattanooga Coke and Chemicals Co., Inc.[s]	k	k	k	k
Citizens Gas and Coke Utility	6	343	145	136
Detroit Coke Corp.[r,t]	k	28	19	(3)
Indiana Gas and Chemical Corp.	k	36	0	22
McWane, Inc. (Empire Coke Co.)	0.5	112	21	74
Tonawanda Coke Corp.[r]	k	k	k	k

(continued)

TABLE 9-14 (continued)

[a]Values in parentheses represent negative numbers.

[b]Parent firms of furnace coke producers are listed first, followed by parent firms of foundry coke producers. Subsidiaries are listed in parentheses below parent companies.

[c]EBIT = earnings before interest and taxes.

[d]Cash flow = operating income + depreciation - interest expenses - taxes.

[e]Net working capital = current assets - current liabilities.

[f]Tangble net worth = equity - intangible assets.

[g]Received income tax credit in 1983. Income tax represented as zero in cash flow calculation.

[i]McLouth Steel Corp. has debtor-in-possession status. The parent company filed for bankruptcy in 1981, and filed a petition for reorganization in December 1984. Financial information listed is for the subsidiary.

[j]Figures are interim values reported for first eleven months of 1984. Converted to 1983 dollars using GNP implicit price deflator.

[k]Information not available.

[l]A merger between National Intergroup, Inc., the parent company of National Steel Corp., and Bergen Brunswig Corp. fell through in April 1985, two weeks before its scheduled date. Some market consultants feel that National Intergroup, Inc. is now a potential target for corporate raiders.

[m]Northwest Industries, Inc., the parent company of Lone Star Steel, announced in April 1985 its merger with Farley Industries.

[n]Producer of both furnace and foundry coke.

[o]Financial information listed applies to subsidiary rather than parent company.

[p]Employees formally took control in January, 1984. All figures are interim values reported for first three months of 1984. Conversion to 1983 dollars using GNP implicit price deflator.

[q]Wheeling-Pittsburgh Steel Corp. filed for Chapter 11 in April 1985.

[r]Owned by James D. Crane. Financial information denied.

[s]Chattanooga Coke and Chemicals Co., Inc. has debtor-in-possession status. The company filed for arrangement under Chapter 11 in March 1984.

[t]Latest information available is for 1982. Conversion to 1983 dollars using GNP inplicit price deflator.

Ten companies show negative earnings before interest and taxes. Of these, nine are furnace coke producers, whose earnings reflect the disastrous years for the steel industry. As mentioned, in 1983, steel firms had financial losses totaling $3.6 billion. The balance of steel trade favored imports by a 14 to 1 import-export ratio. Imports totaled 20.5 percent of apparent supply in 1983.[58]

Two integrated steel producers exhibit negative cash flows, while a third has negative calculated working capital, as financial resources have dwindled with the recession. Two companies, one furnace coke producer and one foundry coke producer, are operating under bankruptcy status.

From the financial data in Table 9-14, three ratios have been calculated (Table 9-15). The first, a liquidity ratio, is a measure of a firm's ability to meet its current obligations as they are due. A liquidity ratio above 1.0 indicates that the firm is able to pay its current debts with its current assets; the higher the ratio, the bigger the difference between current obligations and the firm's ability to meet them. All of the coke-producing firms have liquidity ratios between 1.0 and 4.0, with the exceptions of McLouth Steel (0.17) and McWane, Inc. (5.80). These figures are consistent with liquidity ratios for firms in a wide variety of manufacturing industries.

The second ratio, a coverage ratio, gives an indication of the firm's ability to meet its interest payments. A high ratio indicates that the firm is more likely to be able to meet interest payments on its loans. This ratio can also be used to determine the ability of a firm to obtain more loans. The coverage ratio of the coke-producing firms ranged from 0.8 to 3.9. Seven firms for which information was available had negative coverage ratios due to negative EBIT values. The positive ratios are comparable to the coverage evidenced in most manufacturing industries. The poor performance of those firms with negative ratios may be due to problems in the steel industry. However, many firms continue to make investments funded through mergers, joint ventures, and other means.

The last of the ratios, a leverage ratio, indicates the relationship between the capital contributed by creditors and that contributed by the owners. Leverage magnifies returns to owners. Aggressive use of debt

TABLE 9-15. FINANCIAL RATIOS FOR COKE-PRODUCING FIRMS

Company name[a]	Liquidity ratio[b]	Coverage ratio[c]	Leverage ratio[d]
Armco, Inc.	1.56	-3.42[e]	1.52
Bethlehem Steel Corp.	1.27	-2.30[e]	1.95
Ford Motor Co. (Rouge Steel)	1.05	3.82	1.73
Inland Steel Co.	1.42	-0.25[e]	1.20
Interlake, Inc.	2.16	3.08	0.93
The LTV Corp.	1.41	-1.47[e]	2.91
McLouth Steel Corp. (New Boston Coke Corp.)	0.17	[f]	-3.75[e]
National Intergroup, Inc. (National Steel Corp.)	1.40	-2.85[e]	1.40
Northwest Industries (Lone Star Steel Co.)	1.80	-1.66[e]	1.65
Shenango Furnace Co., Inc. (Shenango, Inc.)[g]	1.59	[f]	0.51
U.S. Steel Corp.	1.22	1.12	2.34
Weirton Steel Corp.	1.79	[f]	[f]
Wheeling-Pittsburgh Steel Corp.	1.42	-1.25[e]	3.06
Jim Walter Corp.[g]	1.09	0.81	3.64
Koppers Co., Inc.[g]	2.15	1.59	0.86
Alabama Byproducts Corp.	3.17	[f]	0.35
Citizens Gas and Coke Utility	1.32	[f]	1.52
Detroit Coke Corp.	1.08	[f]	-10.3[e]
Indiana Gas and Chemical Corp.	1.18	[f]	0.50

(continued)

TABLE 9-15 (continued)

Company name[a]	Liquidity ratio[b]	Coverage ratio[c]	Leverage ratio[d]
McWane, Inc. (Empire Coke Co.)	5.80	[f]	0.42

[a]Parent firms of furnace coke producers are listed first, followed by parent firms of foundry coke producers. Subsidiaries are listed in parentheses below parent companies. No ratios were calculated for Carondelet Coke Corp., Chattanooga Coke and Chemicals Co., Inc. and Tonawanda Coke Corp. due to lack of information.

[b]$\text{Liquidity ratio} = \frac{\text{Current assets}}{\text{Current liabilities}}$

[c]$\text{Coverage ratio} = \frac{\text{EBIT}}{\text{Annual interest expense}}$

[d]$\text{Leverage ratio} = \frac{\text{Total liabilities}}{\text{Tangible net worth}}$.

[e]Negative values are not meaningful.

[f]Information not available.

[g]Produces both furnace and foundry coke.

increases the chance of default and bankruptcy. The chance of larger returns must be balanced with the increased risk of such actions. The leverage ratio indicates the vulnerability of the firm to downward business cycles. Also, a high ratio reveals a low future debt capacity, i.e. additions to debt in the future are less likely. The firms with coke-making capacity had leverage ratios that ranged from 0.3 to 3.7. Six companies had ratios below one, while one firm experienced a negative ratio. These figures highlight the poor financial condition of many firms in the coke industry. Currently, firms with coke-making capacity are engaged in substantial amounts of debt financing, while continuing to make investments.

Another measure of financial performance is the rate of return on equity. Studies of the iron and steel industry show low rates of return on equity. In an analysis performed by Temple, Barker, and Sloane, Inc. (TBS), the real (net of inflation) rate of return in the steel industry was estimated to be 0.2 percent for the period 1970 to 1980. The TBS analysis projected a rate of return on equity of 1.0 percent for 1980 to 1990.[59] These estimates of historical and projected return on equity compare very poorly with estimates of the required return on investment in the steel industry. A difference between realized and required returns implies that equity financing of capital expenditures may be difficult.

As noted, low rates of return on equity affect common stock prices and have implications for future investment financing, including environmental control expenditures. The following data represent total pollution abatement capital expenditures (PACE) as a percentage of new capital expenditures (NCE) for SIC 3312.[2 60 61 62]

Year	Percentage PACE of NCE
1975	20.25
1976	20.92
1977	22.95
1978	22.20
1979	25.57
1980	20.11
1981	15.75
1982	12.32

PACE as a percentage of NCE peaked at 25.57 percent in 1979, after having been fairly steady throughout the latter part of the 1970s. The trend is

the 1980s shows a PACE as a declining percentage of NCE. This decrease may reflect the capital availability restrictions experienced by the steel industry during this period.

For the steel industry, issuing new stock to raise investment capital is unlikely under current circumstances. If environmental and other control investments cannot be financed through new equity, another source of funds must be found. Increased debt is one potential source. However, firms with coke-making capacity already have incurred substantial amounts of debt. The TBS analysis concluded that to avoid deterioration in its financial condition, the steel industry is likely to reduce expenditures to modernize productive facilities rather than increase its external financing.[63]

The steel industry has had to resort to more creative forms of financing to provide funds for modernization of facilities. This upgrading is key to gaining and maintaining a competitive position with respect to imports. Cash flow for the industry has been below capital requirements for the past two decades. Mergers, joint ventures, shared production arrangements, abandonment of uneconomic facilities, and the sales of assets are likely to continue being sources of capital.[64] Funds advanced by customers, with repayment geared to earnings have been used for equipment modernization.[65]

9.1.6 Industry Trends

The demand for coke is derived from the demand for steel produced by processes that utilize coke. Hence, description of steel industry trends in technological development and production are useful indicators of future coke production and coke capacity requirements.

As mentioned, there has been a technological shift toward labor-saving technology which is expected to continue. Trends in modernization are away from open-hearth furnace production and toward electric arc furnaces and basic oxygen furnaces. In 1960, these processes accounted for 88.2 percent, 9.5 percent, and 3.3 percent of U.S. production, respectively, while in 1982 these values were 8.2 percent, 31.1 percent, and 60.7 percent.[66] In 1985, basic oxygen furnaces are expected to account for 61.5 percent of steel production, with electric furnaces contributing 34.0 percent or more,

and open hearth furnaces declining to 6.1 percent or less.[67] Electric arc and basic oxygen furnaces represent reductions in production time, as well as shifts to less expensive inputs.[67] The increased use of these types of furnaces will result in some decrease in demand for coke.

Other changes have improved industry productivity, quality of yields, and energy efficiency. In-ladle processes (performed after the melting furnace stage) include inert gas stirring and vacuum treatments.[68] These techniques yield higher quality steel.

The use of continuous casters, which convert molten steel directly into shapes ready for rolling, has increased from 18 percent of production in the late 1970s to 35 percent in 1984.[69] Yield of finished product per ton of raw steel may be boosted to 95 percent from the current 76 percent by use of this process. For each ton of finished steel produced using this technology, 15 percent to 20 percent less raw steel is required, while 40 percent to 50 percent less energy is needed.[67] The impact of these technological developments on the coke industry is unknown. Any effects will be through productivity improvements in the steel industry.

Technological trends have reduced steel use per unit of output of durable goods. Since the 1970s, the decline in consumption of steel per dollar of gross national product has averaged 4 percent annually, with continued decline expected.[70] Increases in economic growth are predicted to offset this effect, resulting in an increase in steel use to 95 million megagrams by 1988, with domestic shipments representing a 5 percent average annual rate increase over the 1983-1988 period.[65] Projections by the Bureau of Mines predict U.S. raw steel demand will be 138 million megagrams in 1990, and 164 million megagrams in 2000.[71]

Steelmaking capacity utilization has recently been low, averaging 47.3 percent in 1982 and 55.4 percent in 1983.[72] In 1984, this rate rose to 82 percent in April before dropping to 57 percent in September.[73] Capacity utilization is an important measure of industry performance due to high fixed costs for the industry. The larger the volume of production, the smaller the cost per unit of steel produced. For the steel industry, the breakeven point for operations is at approximately 65 percent of capability, though this figure is highly dependent on prices.[73] This means that steel companies have been operating at losses for several years.

The steel industry has responded to this financial difficulty by permanently reducing capacity. Since 1983, this reduction has been more than 10 percent, with perhaps another 5 percent cut necessary.[73] From 122.5 million megagrams in 1984, capacity is likely to be trimmed to 109 million megagrams by the late 1980s.[73] However, the Bureau of Mines predicts U.S. production of raw steel will rise to 113 million megagrams in 1990, and to 132 million megagrams in 2000, under assumptions of slow growth in the rate of production, and increases in demand.[71] Changes in capacity utilization affect coke production only to the extent that coke is an input to the steel production process. Reductions in steel production, coupled with shifts to non-coke energy inputs could greatly reduce demand for coke.

The emergence of mini mills to supply regional demand for steel has had an impact on the operation of the larger integrated steel mills. Mini mills now account for approximately 20 percent of U.S. steel production, at a cost per ton of installed capacity about 75 percent less than for integrated plants. The use of electric arc furnaces in mini mills may result in dramatic reductions in coke demand if the minis claim 40 percent of the steel market by 2000, as some predict.[74]

The combination of the factors described in this section indicate that coke consumption is destined to continue declining. Technological improvements are likely to result in an input shift away from coke, while reduced capacity in the integrated steel industry signals a decrease in amounts of coke needed for blast furnace steel production.

9.1.7 Market Behavior: Conclusions

Market structure, financial performance, and potential growth influence the choice of a methodology to describe supply responses in the coke-making industry. Although some characteristics of this industry indicate a potential for market power, other characteristics belie it.

Some concentration exists in coke-making capacity and steel production; however, many firms produce coke and iron and steel products. Vertical integration is substantial; however, integration appears to result primarily from a desire for increased certainty in the supply of critical inputs. Furthermore, substitution through alternative technologies and coke imports

is feasible, and some substitutes for the industry's final products (iron and steel) are available. In any industry, the potential for substitution is a major factor leading to competitive pricing. Certainly, the financial profile of coke-making firms is not indicative of monopoly profits. Prospects for industry growth are limited. An individual firm must actively compete with other firms in the industry to improve its profit position, or even to remain viable.

No industry matches the textbook definition of perfect competition. The important issue is whether or not the competitive model satisfactorily captures major behavioral responses of firms in the industry. Based on the factors outlined in this section, the competitive pricing model adequately describes supply responses for coke-making firms.

9.2. ECONOMIC IMPACT OF REGULATORY ALTERNATIVE

9.2.1 Summary

Economic impacts are projected for Regulatory Alternative II for two unit compliance cost scenarios: mid-range cost estimate and upper-bound cost estimate. Furnace and foundry coke impacts are examined separately because their production costs and markets differ. All cost and price impacts are in second-quarter 1984 dollars. Where necessary, conversion to 1984 values were made by multiplying 1979 values by 1.362, the ratio of 1984 second-quarter GNP implicit price deflator to the 1979 GNP implicit price deflator.[14 75] The 1983 values were converted by multiplying by 1.032, the ratio of the producer price index for second-quarter 1984 to the same index for 1983.[76]

When measured on a per-unit of output basis, the costs of meeting baseline regulations for foundry coke plants tend to be greater than those for furnace coke plants for two reasons. First, some economies of scale are present for some of the controls. Foundry plants tend to be smaller than furnace plants, thus, they have higher per-unit control costs. Second, for a given battery, foundry coke output will be less than furnace coke output because foundry coke coking time is about two-thirds longer than furnace coke coking time.

Regulatory Alternative II has annualized compliance costs of $14 to $17 million above baseline for furnace and foundry coke producers combined.

Regulatory Alternative II requires capital expenditures of $9 to $13 million above baseline for furnace and foundry coke producers combined. These costs differ from engineering estimates due to the calculation of costs based on batteries with marginal cost of production below price, rather than all batteries.

Price impacts are estimated under the empirically supported hypothesis that furnace coke demand is responsive to higher coke prices. Foundry coke demand is assumed to respond to price. Regulatory Alternative II would have maximum impacts of $0.25/Mg (0.2 percent change) on the price of furnace coke, and $1.34/Mg (0.8 percent change) on the price of foundry coke under Import Scenario A (1984 dollars). Under Scenario B there are no foundry coke price effects.

Regulatory Alternative II would have less than a 1 percent negative impact on the production of either furnace or foundry coke under Scenario A. Under Import Scenario B, Regulatory Alternative II would decrease foundry coke production by 2.8 percent. There are 14 furnace coke batteries that currently appear uneconomic. There are no uneconomic foundry coke batteries. Regulatory Alternative II would place one more furnace coke battery into the uneconomic production region.

9.2.2 Methodology

The following approach focuses on the long-run adjustment process of furnace and foundry coke producers to the higher costs of coke production that the regulatory alternatives will create. These long-run adjustments involve investment and shutdown decisions. Short-run adjustments, such as altering coking times, to meet the fluctuations in the demand for coke are not the subject of this analysis.

Because of differences in production costs and markets, furnace and foundry coke producers are modeled separately. Both are assumed to behave as if they were competitive industries selling coke in a market. This assumption is somewhat more realistic for foundry than for furnace coke producers because most furnace coke is produced in plants captive to the steel industry. However, interfirm and intrafirm shipments of coke are not uncommon, as can be inferred from Table 9-11. A plant-by-plant review of the coke industry by Hogan and Koelble also confirmed the existence of such exchanges.[77]

A set of programmed models has been developed to produce intraindustry and interindustry estimates of the economic impacts of the alternative regulations. The models are applied to both furnace and foundry coke, and the sectors included are coke, steel, and ferrous foundries. The rest of the economy is incorporated into the interindustry portion of the analysis.

The analytical approach incorporates a production cost model of the coke industry based on engineering data, and an econometric model of the steel industry. The interrelationships of these models for furnace coke are shown in Figure 9-3. The upper portion of Figure 9-3 encompasses the supply side impacts of the regulatory alternatives; the lower portion contains the demand side impacts. In the synthesis step, the two sides are brought together and the equilibrium price and quantity relationships are determined. An analogous diagram for foundry coke would substitute ferrous foundry products for steel. The methodology is described further in the following subsections.

9.2.2.1 Supply Side. A production cost model that incorporates technical relationships and engineering cost estimates is used with plant-specific information to compute separate industry supply functions, with and without additional controls.[78] Supply functions are estimated on a year-by-year basis for furnace and foundry coke plants projected to be in existence between 1984 and 1995. Both coke production costs and the costs that plants incur to meet existing environmental regulations are computed to estimate the industry supply curve before any additional controls are applied. Estimates of the costs of control for compliance with the regulatory alternatives are used to compute the projected upward shifts in that supply function. All costs are in 1984 dollars.

This approach provides a method of estimating the industry supply curve for coke, which shows the alternative coke quantities that will be placed on the market at alternative prices. When the supply curve is considered in conjunction with the demand curve, an equilibrium price and coke output rate can be projected. Supply curve shifts caused by the regulatory alternatives can be developed from the compliance cost estimates made by the engineering contractor. These new supply functions, along with the demand curve, can then be used to compute the equilibrium price and output rate under each regulatory alternative.

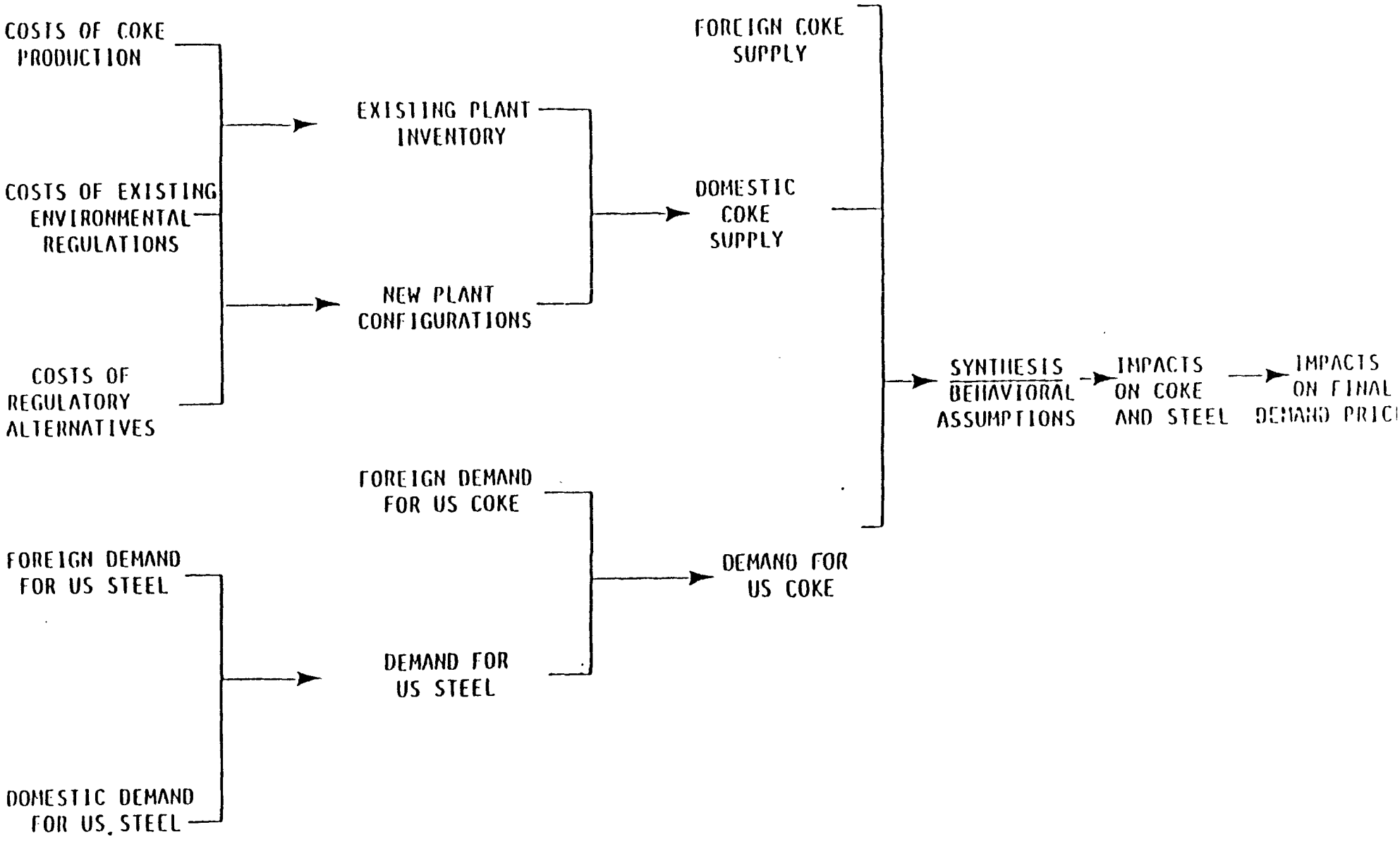

Figure 9-3. Economic impact model.

9.2.2.1.1 Data base. Plant-by-plant data on over 60 variables for furnace and foundry coke plants in existence in 1979 were compiled from government publications, industry contacts, and previous studies of the coke industry. The data base was sent to the American Iron and Steel Institute, which submitted it to their members for verification, corrections, and additions,[79] and to the American Coke and Coal Chemicals Institute. The data were adjusted to account for the 1984 plant inventory in the reanalysis. Capacity, number of ovens, and status (hot idle, cold idle, under construction, or online) were updated for each battery.[5]

9.2.2.1.2 Output relationships. For a given battery, the full capacity output of coke, measured in megagrams per year, is dependent on the nominal coal charge (megagrams of coal per charge) per oven, the number of ovens, and the effective gross coking time (net coking time plus decarbonization time). The following values for effective gross coking time were used except where plant-specific values were available.[78]

	Furnace coke	Foundry coke
Wet coal	18 hours	30 hours
Preheated coal	13 hours	24 hours

An age-specific outage rate that varies from 4 to 10 percent is assumed to allow for normal maintenance and repair. Thus, the model assumes some increase in such costs as plants age.

The quantities of by-products produced are estimated from engineering relationships. These quantities depend on the amount of coal carbonized, percentage of coal volatile matter, coking time, and configuration of the by-product facility at a plant. The by-products included in the model are coke breeze, coke oven gas, tar, crude light oil, BTX, ammonium sulfate, anhydrous ammonia, elemental sulfur, sodium phenolate, benzene, toluene, xylene, naphthalene, and solvent naphtha. All plants are assumed to produce breeze and coke oven gas.

9.2.2.1.3 Operating costs. The major costs of operation for a coke plant are expenditures for coal, labor, utilities, and chemicals. The activities within the coke plant were allocated to five production and ten

environmental control cost centers (Figure 9-4) to facilitate the development of the operating cost estimates.

Coal is the major operating cost item in coke production. Plant-specific estimates of the delivered price of coal were developed by identifying the mine that supplies each plant and estimating transportation costs from the mine to the plant. When it was not known which coal mine supplied a particular plant, it was assumed that the coal came from the nearest mines supplying coal of the same volatile matter and ash content as that used by the plant. Transportation cost estimates were based on the distances traveled and the transport mode (barge or rail) employed.

Maintenance labor and supervision requirements were estimated for 69 jobs within the coke plant. Primary variables that determine the number of maintenance labor and supervision man-hours needed include type of plant (merchant or captive), number of battery units, number of plants at a site, size of by-product plant, type of coal charge (wet or preheated), and coke production. The 1979 labor rates used for captive plants are $23.21/h for supervisory positions and $21.38/h for production labor. For merchant plants, rates of $21.52/h and $19.61/h are assumed. These values are scaled by the GNP implicit price deflator to 1984 dollars.

The major utilities at a coke plant are steam, electricity, water, and other fuels. Utility requirements were estimated from the data on the plant configuration and output rates for coke and the by-products. The prices used for the utilities are $7.41/10^3 lb steam; $0.037/kWh electricity; $0.22/10^3 gal cooling water; and $3.76/10^6 Btu underfire gas. These values are 1979 figures scaled to 1984 dollars by the GNP implicit price deflator.

9.2.2.1.4 Capital costs. Although no net additions to industry coke-making capacity are anticipated during the 1984 to 1995 period, a number of producers had plans to rebuild or replace existing batteries in 1979. In 1984, three new batteries had been constructed and one was under construction.[5] Such actions alter the long-run industry supply curve because the new batteries typically have lower operating costs per unit of output than the batteries they replace and, most importantly, their capital costs will be reflected in the new supply curve.

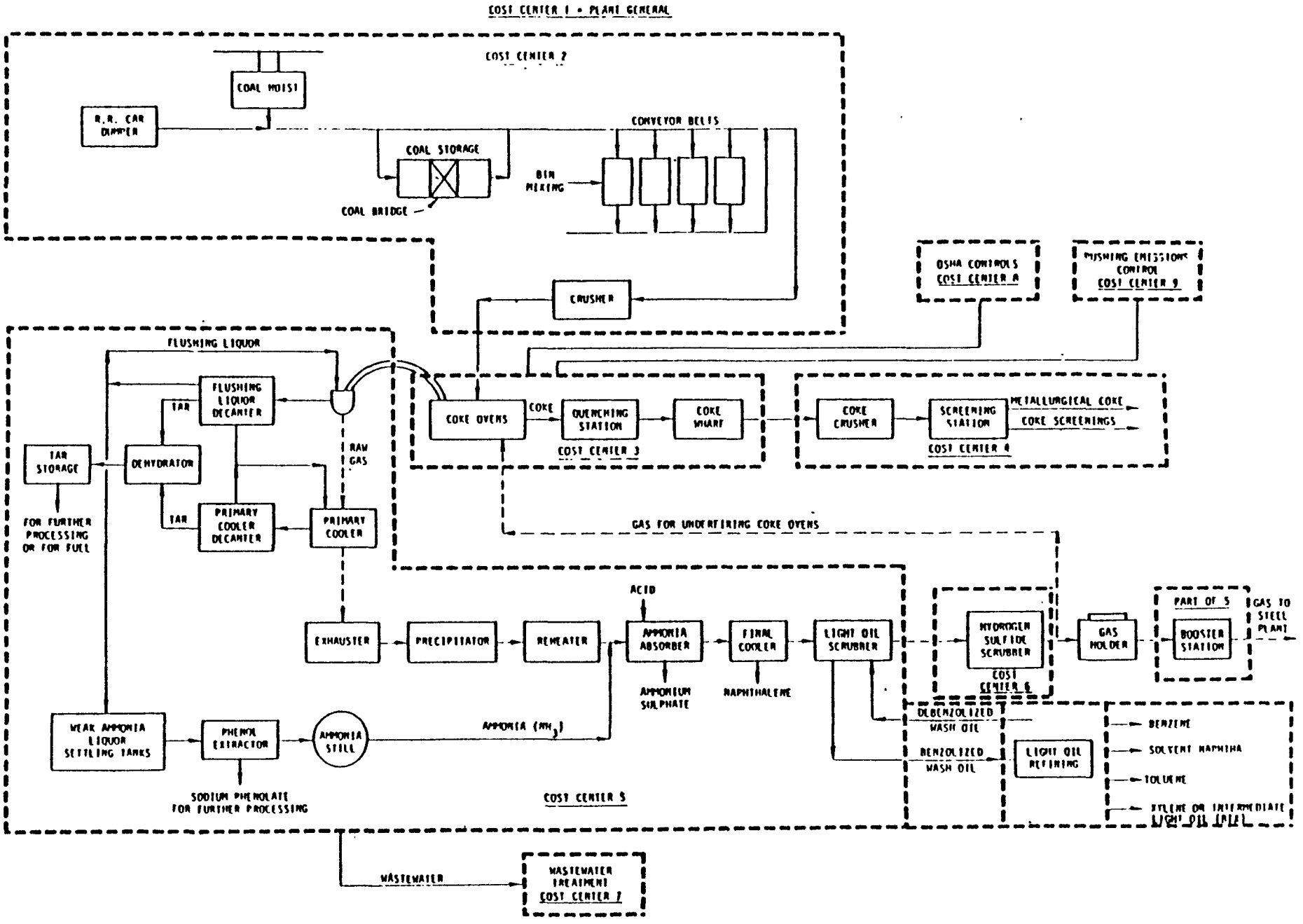

Figure 9-4. Coke plant cost centers.

The capital cost breakdown for new plants is shown in Table 9-16. For such plants, the major capital cost items are the battery, quench tower, quench car, pusher machine, larry car, door machine and coke guide, by-product plant, coal handling system, and coke handling system. A 60-oven battery is assumed. Pipeline charging can increase the coke-making capacity of a given oven by about 25 percent by reducing gross coking time. Consequently, the per-unit operating cost is reduced. The capital costs show economies of scale, i.e., larger plants have smaller per-unit-of-capacity capital costs. The capital cost per unit of capacity is higher for pipeline-charged batteries than for conventionally charged batteries.

Periodically, batteries must undergo major rehabilitation or rebuilding because of performance deterioration. The costs of pad-up rebuilds will vary from site to site depending on battery maintenance, past operating practices, and other factors. Average estimates of the cost of rebuilding were developed for this study and are shown in a report by PEDCo.[81] The economic life of coke-making facilities is subject to considerable variation depending upon past maintenance and operating practices, which also affect current operating costs. For this study, 25 years was used as the average preferred life of a new coke-making facility; however, many batteries are operated for 35 to 40 years. If 35 to 40 years is a more reasonable battery lifetime, use of a 25-year lifetime will result in some overestimation of the annual costs of new or rebuilt facilities. However, firms will probably not plan or expect to wait 35 to 40 years to recoup an investment in coke-making capacity.

9.2.2.1.5 Environmental costs. Plant-specific estimates of the installed capital and operating costs for current environmental regulations are incorporated in the model. The current regulations include workplace standards (Occupational Safety and Health Administration [OSHA]), water quality regulations best practicable technology [BPT] and best available technology [BAT], and State implementation plan (SIP) requirements. Compliance expenses incurred for all plants in the data base for each of the current regulations assumed baseline control costs were estimated. Costs to comply with OSHA and BPT water requirements under the Federal Water Pollution Control Act were assumed incurred by 1981. Costs for all other baseline environmental regulations were assumed to be incurred by 1983.

TABLE 9-16. ESTIMATED CAPITAL COSTS OF NEW PLANTS[80]

	Conventionally charged battery		Pipeline charged battery	
	4-meter[a]	6-meter[a]	4-meter[a]	6-meter[a]
Capacity (10^3 Mg/yr)	450	720	560	900
Capital costs by element (10^6 1979 dollars)				
Coke battery	34.20	48.90	64.60	83.70
Quench tower with baffles	2.45	2.85	2.45	2.85
Quench car and pushing emissions control	6.58	7.92	6.58	7.92
Pusher machine	2.50	3.20	2.40	3.20
Air-conditioned larry car	1.72	2.28	0	0
Door machine and coke guide	1.80	2.10	1.80	2.10
By-product plant	32.50	39.75	35.76	43.74
Coal-handling system	18.20	23.60	20.62	26.70
Coke-handling system	6.85	8.80	7.74	10.00
Offsites	1.60	1.80	1.69	1.91
Total	$108.40	$141.20	$143.74	$182.12

[a]In the production cost model, new foundry batteries were assumed to be 4-meter batteries and new furnace batteries were assumed to be 6-meter batteries.

The scatter diagrams in Figures 9-5 and 9-6 show estimates from the coke supply model of average total cost of production in 1984, including environmental costs, for all furnace and foundry coke plants. A weak, inverse relationship between the average cost of production and the size of the plant is evident in Figures 9-5 and 9-6. However, a number of other factors create variability in the average cost of production across coke plants. The most important of these factors are the delivered price of coal, the age of the plant, and the by-products recovered.

9.2.2.1.6 Coke supply function--existing facilities. The operating and capital cost functions were used to estimate the cost of production, including relevant environmental costs, for all plants in the data base. This cost does not include a return on investment for existing facilities. The capital costs for these facilities have already been incurred and do not affect operating decisions.

Capital costs that have not yet been incurred are annualized at 6.2 percent, which is estimated to be the real (net of inflation) cost of capital for the coke industry. (This percentage is an after-tax estimate.) This figure, which was estimated from data on the capital structure for publicly owned steel companies, has been used in this study as the minimum acceptable rate of return on new facilities.[82]

The capital costs of the regulatory alternative are annualized over the life of the control equipment (20 years). This action is tantamount to assuming either that all ovens have a remaining life of at least 20 years or that the control equipment is salvageable.

The supply function for each plant is estimated as follows: the average cost of production is computed for each battery in the plant; these batteries are arranged in increasing order of their average costs of production and the output for each battery is accumulated to produce a stepped marginal cost function for the plant; plant overhead costs are averaged for all relevant plant output rates; and average total costs are computed for each output rate by summing the average costs for plant overhead and the battery. Each plant's supply function is the portion of the marginal cost function above the average total cost function. For existing plants where the average total cost exceeds marginal cost over the entire range of

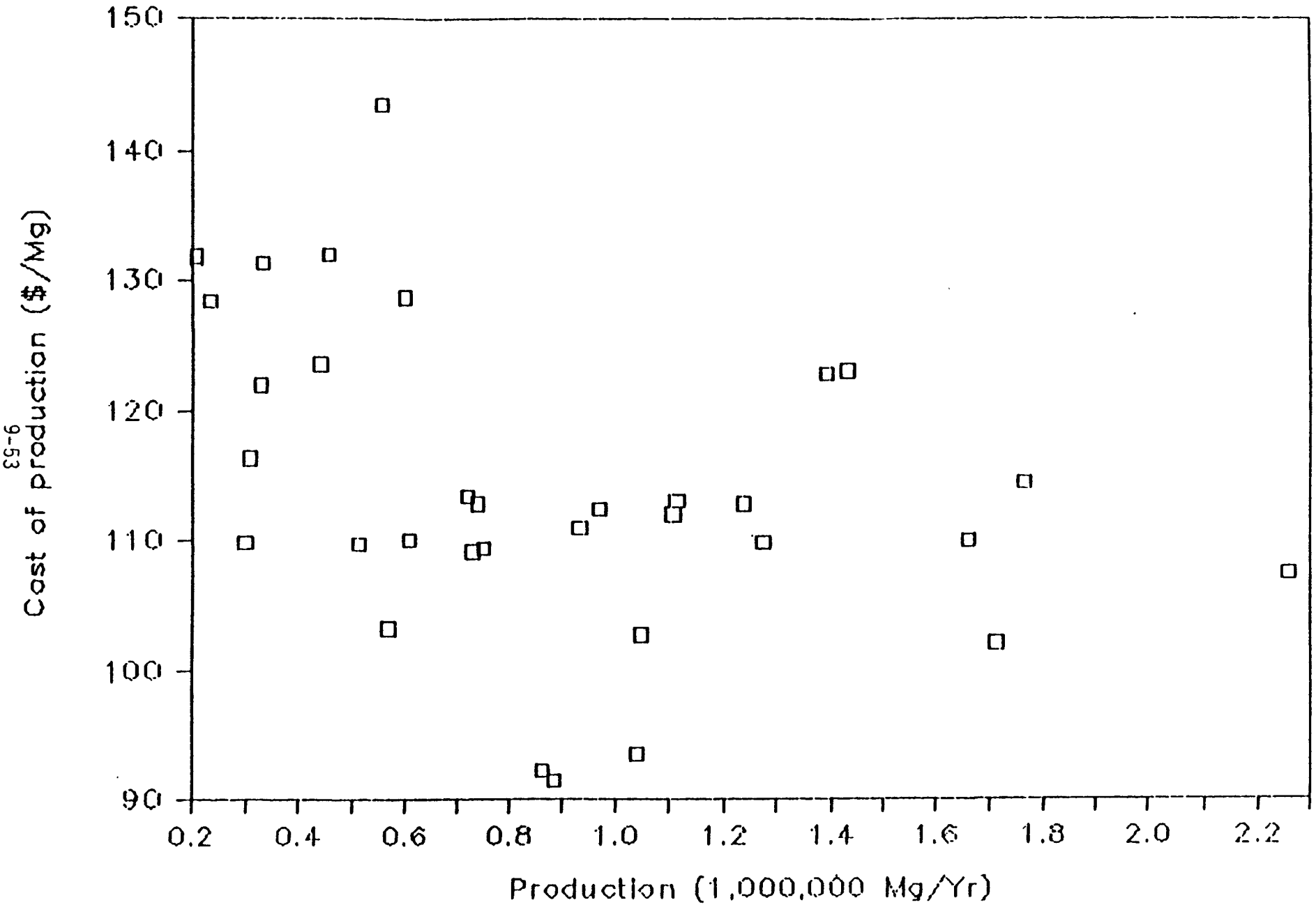

Figure 9-5. Estimated average cost of furnace coke production as a function of plant production, 1984.

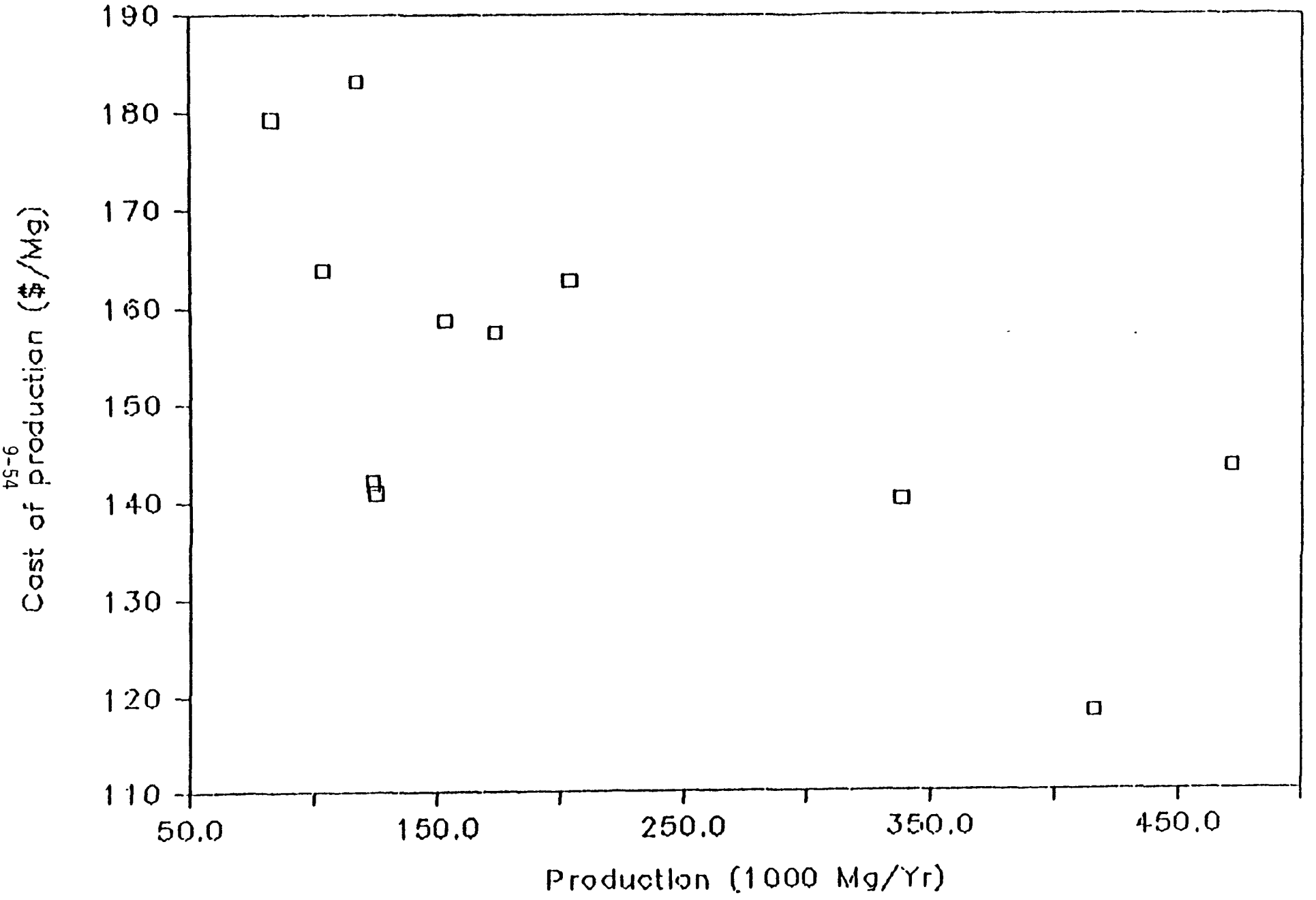

Figure 9-6. Estimated average cost of foundry coke production as a function of plant production, 1984.

output, the supply function is the point on the plant's average total cost function represented by capacity output (after allowing for outages). The aggregate long-run supply function for all currently existing coke plants and batteries is obtained by horizontally summing the supply function for each plant. The 1984 industry marginal cost (supply) curves for existing furnace and foundry coke plants are presented in Figures 9-7 and 9-8, respectively.

9.2.2.1.7 Coke supply function--new facilities. The cost of coke production for new furnace and foundry batteries was estimated from the engineering cost model, assuming the new model plants described previously. These costs include the normal return on investment and allowances for depreciation and corporate income taxes. When expressed on a per-unit basis, these costs are the minimum price at which it is attractive to build new facilities.

9.2.2.2 Demand Side. The demand for coke is derived from the demand for products that use coke as an input to production--primarily steel and ferrous foundry products. A demand function for furnace coke was derived by econometrically modeling the impacts of changes in furnace coke production costs on the steel industry.[83]

The econometric model of the steel industry has two sectors: steel and coke. The steel sector includes domestic steel supply, steel imports and exports, and steel consumption (steel supply plus imports minus exports). Similarly, the model of the coke sector consists of domestic coke supply, domestic coke demand, and coke imports and exports. The two sectors are linked by a derived coke demand function, which includes as variables steel production, steel price, and quantities and prices of other inputs to steel production. The domestic supply of steel is assumed equal to domestic demand for U.S. steel plus world demand for U.S. steel minus U.S. import demand.

Both linear and nonlinear specifications were used to estimate the steel-sector model. Two-stage least squares was used to estimate the different components of the steel sector. Visual inspections of the correlation matrix and a plot of the dependent variable versus the residuals indicated no multicollinearity or heteroscedasticity problems. The Durbin-Watson statistic showed no evidence of autocorrelation.

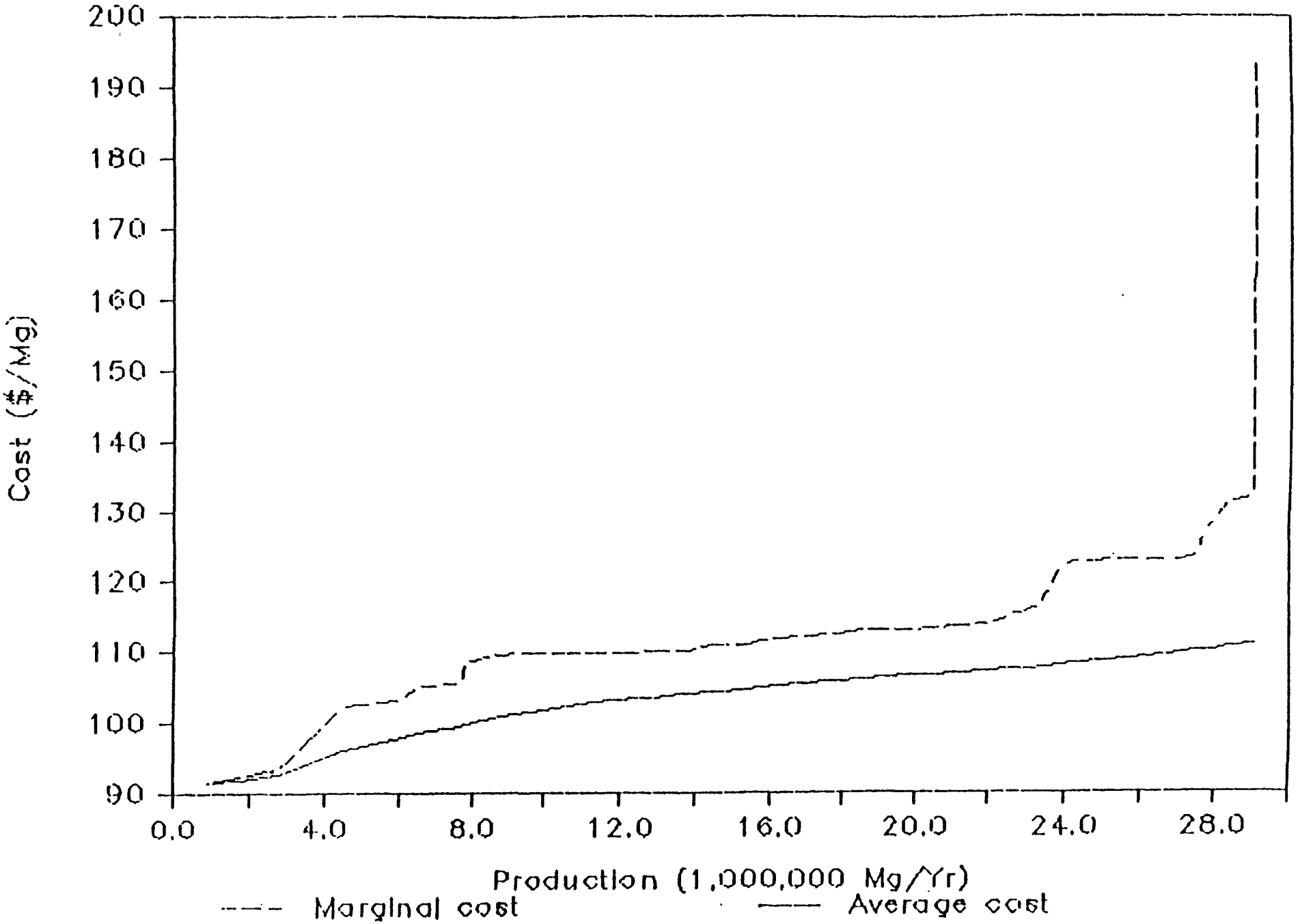

Figure 9-7. Marginal and average cost functions for furnace coke, 1984.

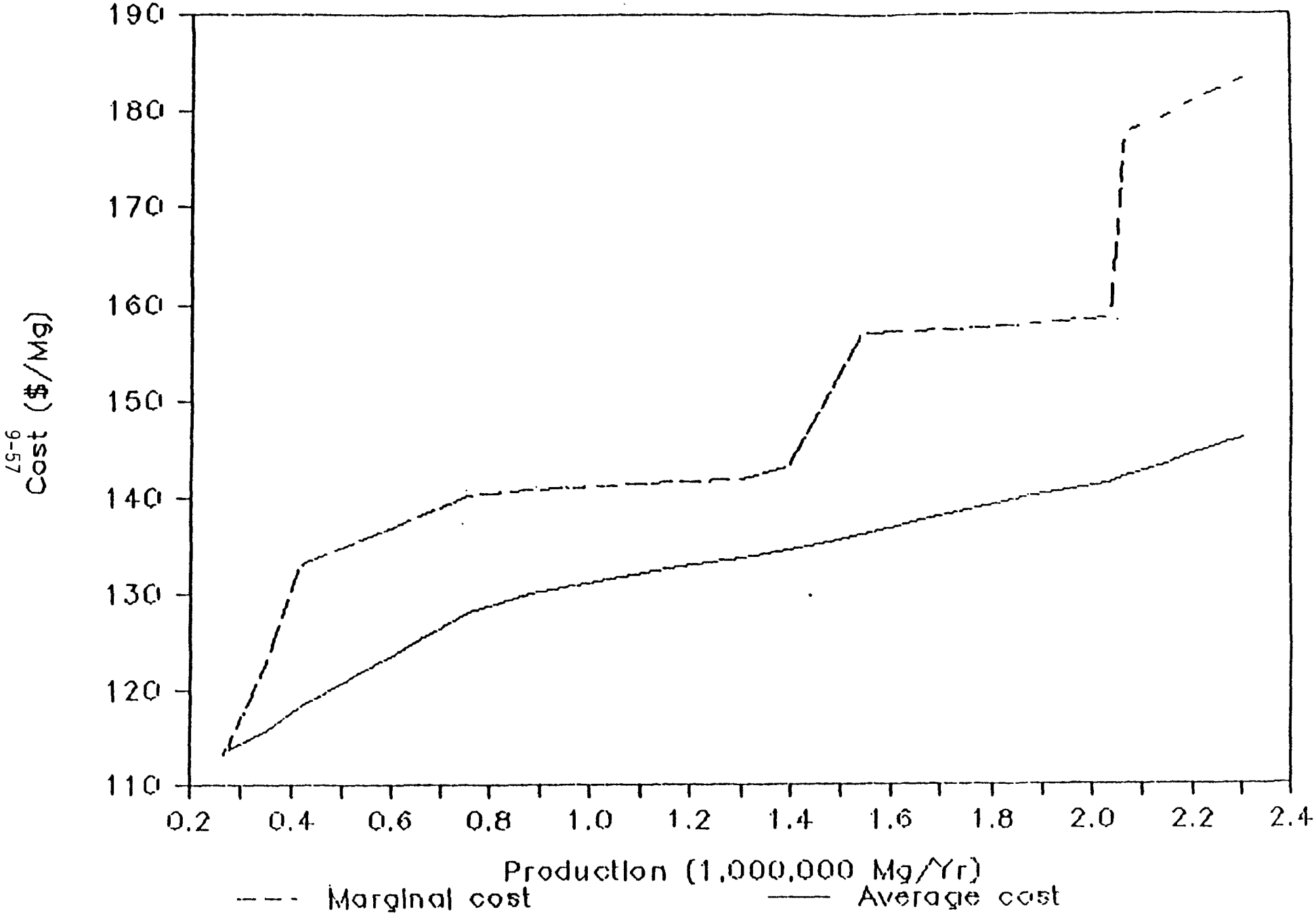

Figure 9-8. Marginal and average cost functions for foundry coke, 1984.

The econometric estimation of the coke sector was complicated by the small share of total domestic production that is traded in the market. The fact that very little coke is actually sold creates concern over the reported price of coke. Therefore, estimates of the implied price of coke were developed, based on the value of coke in steelmaking, and used in the estimation of elasticities.[84] [85] Estimates of elasticities for coke and steel functions are presented in Table 9-17. Actual prices for coke produced and used internally by the producing companies were used in the reanalysis.

An attempt was made to derive a demand function for foundry coke in an analogous manner. However, the relevant coefficient estimates were not statistically significant at a reasonable level. A direct estimation of the demand function, based on the prices of foundry coke, foundry coke substitutes, and complementary inputs, was also attempted. Unfortunately, the data necessary to properly estimate the demand function was not readily available from published sources. Accordingly, the elasticity of demand for foundry coke was estimated based on the theoretical relationship between the production function for foundry products and the derived demand function for inputs to foundry production. This elasticity calculation is based on a 3-year average of the cost share of foundry coke in foundry production. This estimate is presented in Table 9-17. This elasticity assumes U.S. demand for foundry coke is supplied entirely from domestic production (Scenario A).

Another scenario is that imported foundry coke competes with the domestic product in the open market (Scenario B). A simplifying assumption is that they are perfect substitutes in the production processes which utilize foundry coke. In this case, a reduction in U.S. supply is compensated by imports, so that price need not rise if the quantity of imports purchased is increased. Both scenarios are examined in the reanalysis.

9.2.2.3 Synthesis. Separate linear functions were fit to the furnace and foundry coke marginal cost values depicted in Figures 9-7 and 9-8. As illustrated in Figures 9-9 and 9-10, each supply function is used with the demand function for the appropriate type of coke to compute the initial equilibrium price-quantity values (P_1 and Q_1 in Figures 9-9 and 9-10). In

TABLE 9-17. ESTIMATES OF ELASTICITIES OF STEEL AND COKE MARKETS

		Point estimate	Interval estimate[a]
1.	Percent change in furnace coke demand for 1 percent change in the price of furnace coke	-1.29[b]	--[c]
2.	Percent change in foundry coke demand for 1 percent change in the price of foundry coke	-1.03[c]	--[c]
3.	Percent change in import demand for 1 percent change in the price of furnace coke	1.88	(-1.68, 5.44)
4.	Percent change in price of steel for 1 percent change in the price of furnace coke	0.11[c]	--[c]
5.	Percent change steel demand for 1 percent change in the price of steel	-1.86[d]	(-0.54, -3.18)
6.	Percent change in steel imports for 1 percent change in the price of steel	1.51[d]	(0.51, 2.51)

Note: Estimates are based on the empirical analysis using annual data for the years 1950-1977 with a structural econometric model of steel and coke markets.

[a]Interval estimates are based on 95 percent confidence level.

[b]Derived from the production function for steel, and input cost shares.

[c]Calculation based on the theoretical relationship between input demand elasticity and input cost share in the production of outputs. Accordingly, no interval is provided.

[d]Significantly different from zero at 1 percent level of statistical significance.

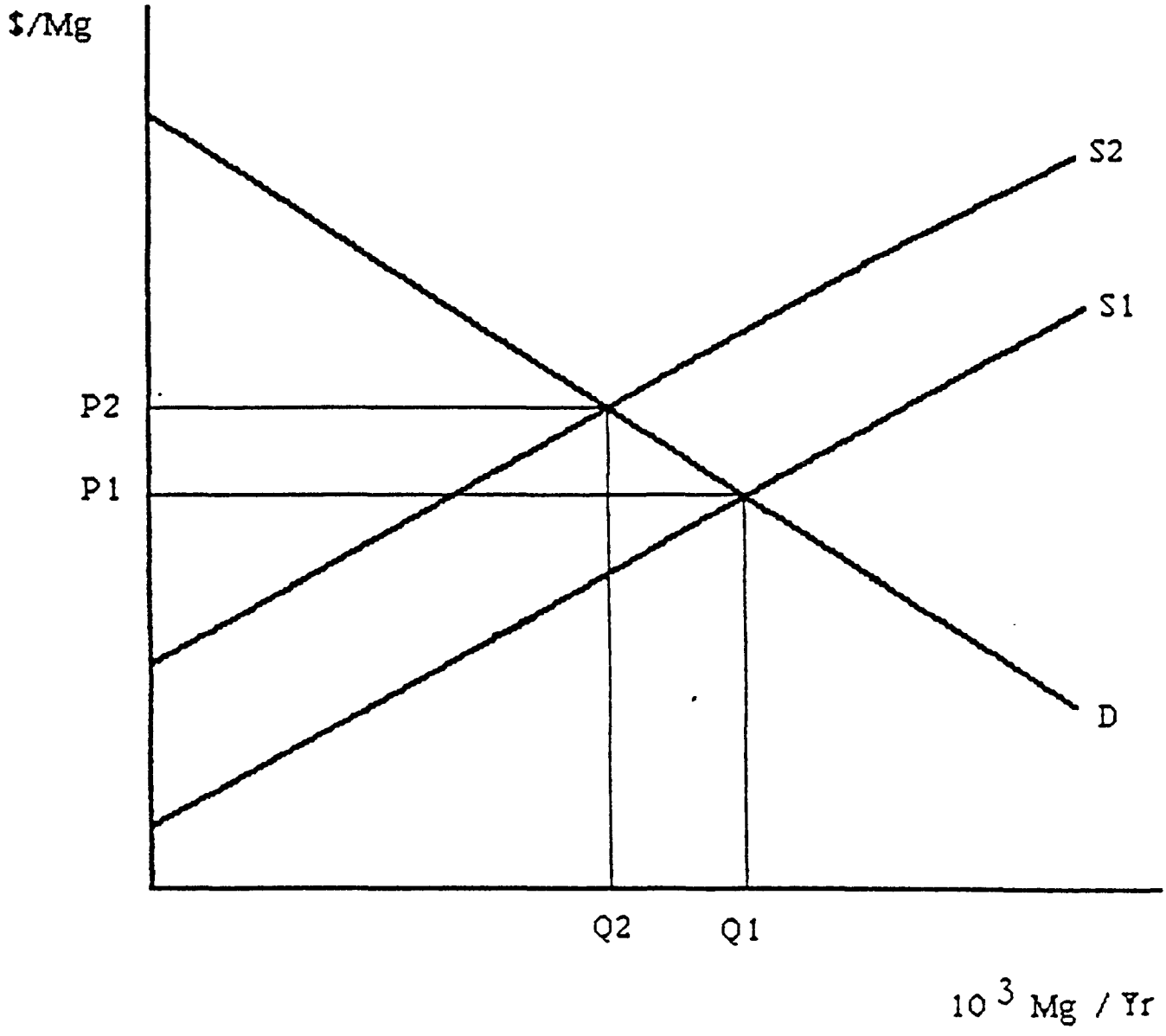

Figure 9-9. Coke supply and demand without import competition.

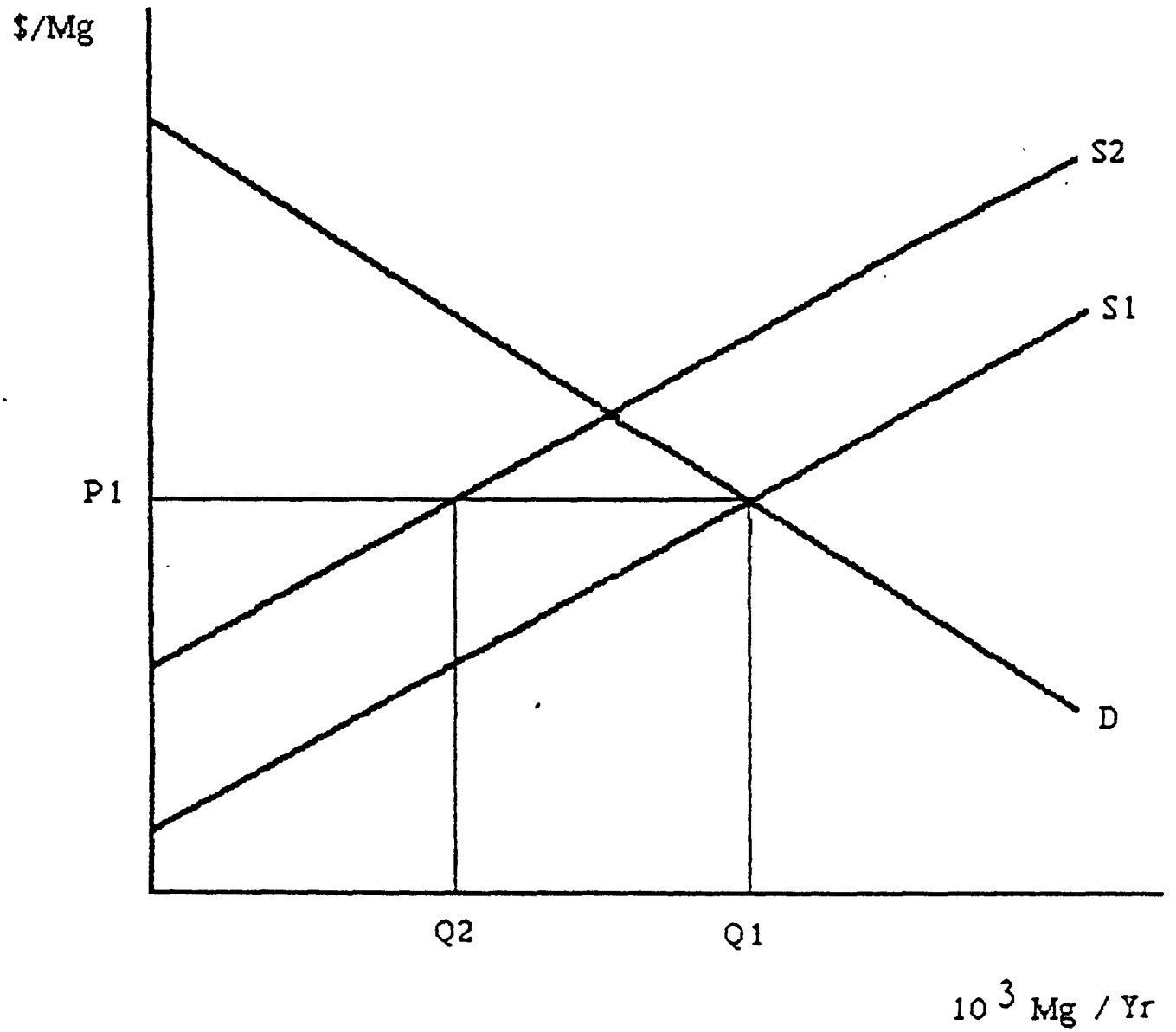

Figure 9-10. Coke supply and demand with import competition.

the case where imports are not perfect substitutes for domestically produced coke, the supply function is reestimated for each regulatory alternative (S_2 in Figure 9-9), and the new equilibrium price-quantity values (P_2 and Q_2 in Figure 9-9) are predicted.

The case where imports compete with domestically produced foundry coke is shown in Figure 9-10. As in Figure 9-9, the supply curve shifts upward to S_2. However, because imports are available, no change in price and quantity need be experienced by the consumer. Though domestic production is reduced by Q_1-Q_2, the share of the market supplied by imports increases by this same amount. The new equilibrium price and quantity for domestic coke are P_1 and Q_2 in Figure 9-10.

9.2.2.4 Economic Impact Variables. Table 9-18 shows the specific economic variables for which impacts are estimated. The methodology presented previously was designed to provide industry-level estimates of these impacts. The conventional demand and supply partial equilibrium model of a competitive market was chosen for this analysis because it was believed to represent the key characteristics of the coke market and many of the impacts of interest can be readily estimated from this model.

Figure 9-11 represents the markets for furnace coke and for foundry coke which is free of import competition (Scenario A). In Figure 9-11, area abQ10 represents the costs of coke production, are aOP1bQ1 the total revenue of producers, and area P1ba producer surplus--the difference between total revenues and the opportunity costs of production. Area P1cb represents the total benefits of consumption, P1bQ10 total expenditures, and area P1cb consumer surplus--the difference between total benefits and total expenditures. With the regulatory alternatives total cost change by adeh - Q2ebQ1. Producer surplus changes by P1P2ef - deha - gbh. Consumer surplus changes by -P1P2eb. Cancelling gains to producers that are offset by losses to consumers leaves the cost of the regulation as adebh. Compliance costs are adeh.

When imported coke is a perfect substitute for domestic coke, and since imported coke is assumed to be available at price P_1, domestic consumers purchase more imports and less domestic coke (Figure 9-12). The results are that domestic production decreases to Q_2, imports increase by Q_1-Q_2,

TABLE 9-18. ECONOMIC IMPACT VARIABLES AND AFFECTED SECTORS

Variable	Sector		
	Furnace coke	Foundry coke	Steel
Price	X	X	X
Output	X	X	X
Profits	X	X	
Costs	X	X	
Plant closures/openings	X		
Capital requirements	X	X	
Factor employment			
Labor	X	X	
Metallurgical coal	X	X	
Imports	X	X[a]	X

[a]Impacted under Scenario B.

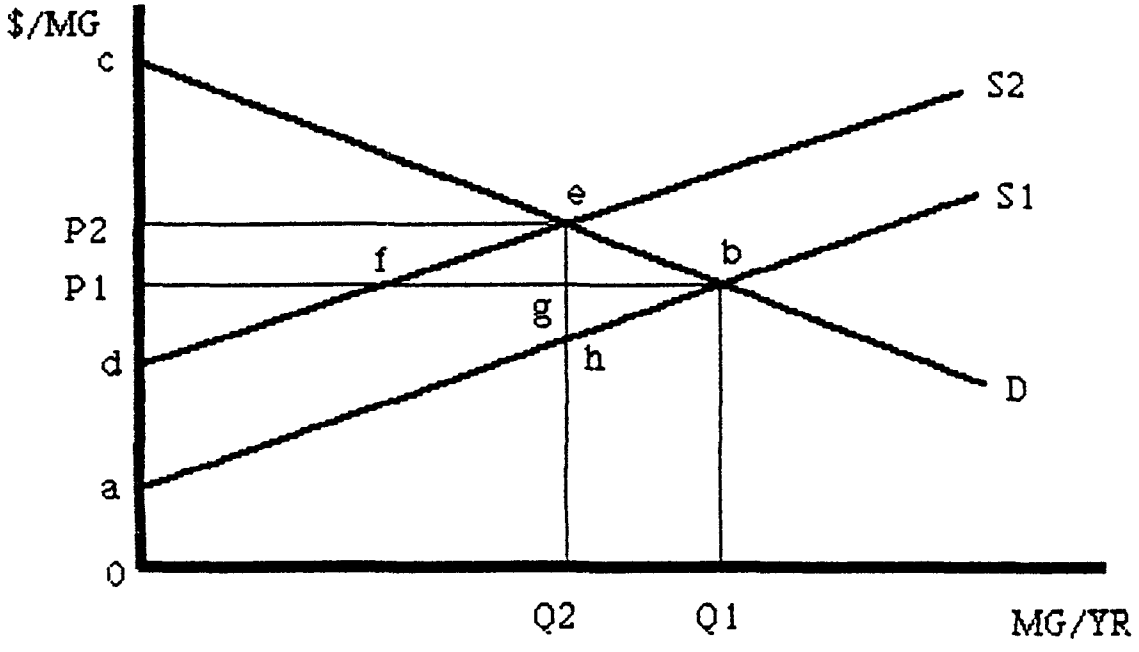

Figure 9-11. Economic impact variables without import competition.

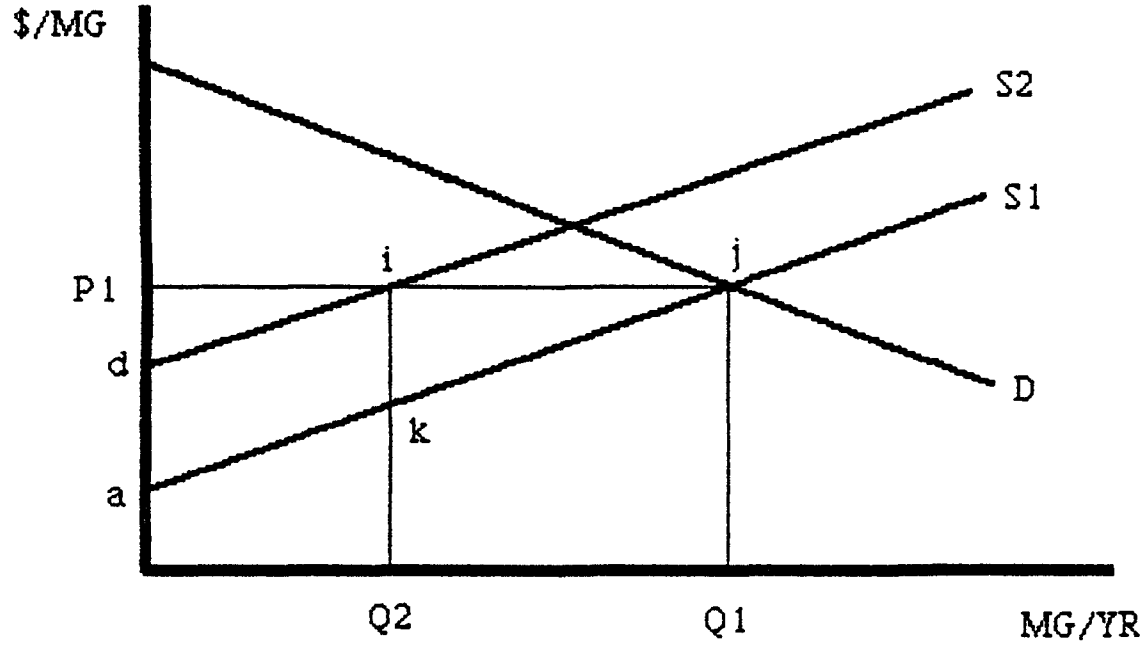

Figure 9-12. Economic impact variables with import competition.

and price remains at P_1. The costs of the regulation to producers are represented by area adij. Compliance costs are adik. There are no costs to consumers because they purchase quantity Q_1 at price P_1 as they were before the regulation.

9.2.3 Furnace Coke Impacts

As described in Section 9.2.2 of this analysis, the furnace coke industry has been modeled as a competitive industry supplying coke to the steel industry. This definition implies the existence of interfirm and intrafirm shipments of coke. However, no allowance has been made for coke transportation costs, although coal transportation costs are included in the cost of coke production estimates. Coke plants and their associated steel mills are typically clustered together. As noted in Section 9.1.4.1, most coke is consumed within the region where it is produced. Hence, transportation across great distances is uncommon. Therefore, the omission of coke transport costs should not greatly influence the calculations.

The baseline values for 1983, presented in Table 9-19, are actual data for 1983, except for coke prices, which are calculated by the model. The values for 1983 are assumed to reflect full compliance with applicable SIP and OSHA air quality regulations and water quality regulations. The coke supply model was used to compute the price of furnace coke, costs, revenues, and profits, given these actual values. Coal consumption and employment projections were made using current coal- and labor-output ratios. The supply function was reestimated assuming control levels being practiced in 1984 for all emission sources. This estimation was used to determine the impacts of moving from baseline industry control levels to alternative regulations control for all sources.

Table 9-20 presents total costs incurred by companies in SIC 3312 in meeting environmental regulations up to 1983. These costs represent industry efforts to achieve baseline compliance. Expenditures are segmented by type of pollutant treated. Total cost for abatement increased throughout the late 1970s and peaked at $956.5 million (1972 dollars) in 1979. Expenditures declined slightly in 1980 and 1981, and dropped to an eight-year low of $549.8 million (1972 dollars) in 1982.

TABLE 9-19. BASELINE VALUES FOR ECONOMIC IMPACT ANALYSIS--FURNACE COKE, 1983[37 86 87]

	Baseline values[a]
Coke market	
Price (1983 $/Mg)	106.25[b]
Production (10^3 Mg)	20,462
Consumption (10^3 Mg)	24,380
Imports (10^3 Mg)[c]	3,918
Employment (jobs)[d]	6,236
Coal consumption (10^3 Mg)	29,787
Steel market	
Price (1983 $/Mg)	319.97
Production (10^3 Mg)	76,763
Consumption (10^3 Mg)	75,710
Imports (10^3 Mg)	15,486
Employment (jobs)[e]	295,000

[a]Baseline assumes companies meet existing regulations including OSHA (coke oven emissions); State regulations on desulfurization, pushing, coal handling, coke handling, quench tower, and battery stack controls; and BPT and BAT water regulations.

[b]Calculated. Market price for furnace coke was $123.51 in the fourth quarter of 1983.

[c]Calculated. Imports = Consumption - Production.

[d]Calculated. Furnace coke employment = Employment in byproduct coke industry × Proportion of coke production represented by furnace coke sector.

[e]Represented by employment in SIC 3312 (Blast furnaces and steel mills).

TABLE 9-20. POLLUTION ABATEMENT EXPENDITURES FOR SIC 3312[62]

Year	Abatement expenditures (10^6 current $)					
	Air pollution	Water pollution[c]	Solid waste[d]	Recovered Cost (10^6 current $)	Total Cost[a] (10^6 current $)	Total cost[b] (10^6 1972 $)
1975	477.3	306.8	43.1	18.1	809.1	647.3
1976	606.9	309.5	51.4	17.8	950.0	722.0
1977	675.1	385.8	85.5	18.1	1,128.3	812.4
1978	709.1	424.9	111.2	15.1	1,230.1	824.2
1979	932.6	511.6	99.5	1.0	1,542.7	956.5
1980	925.4	494.9	127.9	18.8	1,529.4	856.5
1981	940.9	512.6	153.0	22.3	1,584.2	807.9
1982	666.8	408.3	92.4	22.0	1,145.5	549.8

[a]Total cost = Capital expenditure + operating costs - recovered cost summed for all pollutants.

[b]Implicit price deflator for the nonfarm business sector used to convert current dollars to 1972 values.

[c]Includes payments to government units for public sewage use.

[d]Includes payments to government units for solid waste collection and disposal.

9.2.3.1 Price Effects. The price of furnace coke is assumed to be established in a competitive market. In the basic model of a competitive market, the interaction of supply and demand determine the equilibrium price. This price is dependent on the costs of production of the marginal producer and the value of the product to the marginal buyer. The marginal producer is the producer who is willing to supply the commodity at the market price because he is just covering all his costs at that price. The marginal buyer is just willing to pay the market price. Other buyers who value the product more still pay only the market price.

Estimates of the demand and supply functions for furnace coke are necessary to develop projections of the equilibrium price for furnace coke with and without increased control. The supply of furnace coke as shown previously would be shifted by the regulatory alternatives. The demand for furnace coke has been econometrically estimated and found to be responsive to price changes. The estimated elasticity of demand for furnace coke is -1.3. This responsiveness reflects the substitution of other fuels for coke in blast furnaces; the substitution of other inputs, primarily scrap, for pig iron in steelmaking; and the substitution of other commodities for steel throughout the economy.

Higher prices for coke will increase the cost of steel production unless there is a perfect substitution between coke and other inputs to steelmaking. In that case, the consumption of coke would decrease to zero. If substitutions for coke in steelmaking were not possible (i.e., input proportions were fixed), the steel price increase would be the percentage change in coke price times the share that coke represents in the cost of steelmaking (10.7 percent) times the base price of steel.

Table 9-21 presents the furnace coke and steel price impacts of the regulatory alternatives. The proposed regulatory alternatives raise coke prices only slightly; about 0.2 percent regardless of the cost scenario.

9.2.3.2 Production and Consumption Effects. The estimated demand and supply relationships for coke are used to project the production and consumption effects of the regulatory alternatives. As shown in Table 9-22, the changes in coke production and consumption are fairly small for the

TABLE 9-21. PRICE EFFECTS OF REGULATORY ALTERNATIVE II--FURNACE COKE, 1984[a]

Compliance cost scenario	Coke ($/Mg)	Steel ($/Mg)
Midrange estimates	0.22 (0.2)	0.07 (0.0)
Upper bound estimates	0.25 (0.2)	0.08 (0.0)

[a]Values in parentheses are percentage changes from baseline.

TABLE 9-22. PRODUCTION AND CONSUMPTION EFFECTS OF REGULATORY ALTERNATIVE II--FURNACE COKE, 1984[a]

Compliance cost scenario	Coke market (10^3 Mg/yr)			Steel market (10^3 Mg/yr)		
	Production	Consumption	Imports	Production	Consumption	Imports
Midrange estimates	-54 (-0.3)	-39 (-0.2)	15 (0.4)	-36 (-0.0)	-31 (-0.0)	5 (0.0)
Upper bound estimates	-63 (-0.3)	-45 (-0.2)	18 (0.5)	-42 (-0.1)	-36 (-0.0)	6 (0.0)

[a]Values in parentheses are percentage changes from baseline.

regulatory alternative. Changes in production and consumption are less than 0.3 percent.

Imported coke is a close substitute for domestically produced furnace coke. Imported coke is not a perfect substitute because coke quality deteriorates during transit and contractual arrangements between buyers and sellers are not costless. However, increases in the costs of production for domestic plants will increase the incentive to import coke.

The projected increases in coke imports are reported in Table 9-22. Imports increase by a maximum of 0.5 percent under the alternative. As illustrated below, coke imports increased significantly since 1972, but peaked in 1978 and began a marked decline.

Year	Imports (10^3 Mg)
1972	168
1973	978
1974	3,211
1975	1,650
1976	1,189
1977	1,659
1978	5,191
1979	3,605
1980	598
1981	478
1982	109
1983	32

The increase in imports in the 1970s is believed to be the result of a coal strike in the United States during 1978 combined with depressed conditions in the market for steel in the countries exporting coke to the United States. Accordingly, future importation at a high level may depend upon future market conditions for steel in other countries. In any case, the change in coke imports projected for all the regulatory alternatives is small.

9.2.3.3 Coal Consumption and Employment Effects. Any reductions in coke and steel production are expected to cause reductions in the use of the factors that produce them. The major inputs to coke production are coal and labor. Labor is also an important input in coal mining.

The coal consumption and employment implications of the projected reductions in coal, coke, and steel production are shown in Table 9-23.

TABLE 9-23. COAL CONSUMPTION AND EMPLOYMENT EFFECTS OF REGULATORY ALTERNATIVE II--FURNACE COKE, 1984[a]

Compliance cost scenario	Coal consumption for coke (10^3 Mg/yr)	Employment (jobs)[b]		
		Coal[c] mining	Coke plant	Steel-making
Midrange estimates	-79 (-0.3)	-22 (-0.3)	-17 (-0.3)	-139 (-0.0)
Upper bound estimates	-92 (-0.3)	-26 (-0.3)	-19 (-0.3)	-161 (-0.1)

[a]Values in parentheses are percentage changes from baseline.

[b]Employment impacts are based on input-output relationships and production impacts. Impacts on coke plant employment do not include jobs created by the relevant controls.

[c]Annual labor productivity in coal mining is estimated as 3,515 megagrams per year per job.

For Regulatory Alternative II, coal consumption and employment impacts are less than 0.3 percent. These values assume constant coal- and labor-output ratios. The employment impacts shown do not include the estimated increases in employment caused by the regulatory alternatives. Therefore, the employment impacts represent maximum values.

9.2.3.4 Financial Effects. The aggregate capital costs of the regulatory alternatives are summarized in Table 9-24. Capital costs have also been summed across member plants to determine the cost to each coke-producing company of meeting alternative regulations. The total capital costs by company may be used to produce percentages that express the relation between total capital cost and the annual average net capital investment of the company and the annual cash flow of the company. This analysis is presented to give some insight into the distribution of the financial effects across coke-producing firms.

Total capital cost as a percentage of average annual net investment is an indicator of whether the usual sources of investment capital available to the firm will be sufficient to finance the additional capital costs caused by the regulatory alternatives. The larger this percentage, the greater the probability that investment needed to comply with the regulatory alternatives would significantly reduce investment in other areas. This percentage provides some insights regarding the degree to which firms will be able to finance the controls required to meet the regulatory alternatives without a serious impact on their financial position.

Total capital cost as a percentage of cash flow provides similar information. Cash flow data accounts for revenues, operating costs, depreciation, expenditures on dividends, interest expenses, and taxes. Thus, it is a more realistic measure of the funds available to the firm. However, this index may not be consistent across firms, because depreciation accounting varies across firms. As with the net investment ratio, the larger the ratio, the greater the probability that cash flow will be diverted from other sources to finance compliance expenditures.

Financial analysis is necessarily restricted to companies for which financial data are accessible. Therefore, financial analysis cannot be conducted for some privately owned companies for which reporting has been

TABLE 9-24. INDUSTRY CAPITAL REQUIREMENTS OF REGULATORY ALTERNATIVE II--FURNACE COKE, 1984

Compliance cost scenario	Capital costs[a] (10^6 1984 $)
Midrange estimates	7
Upper bound estimates	10

[a]Calculated for all plants in operation in 1984.[44 46]

restricted. These companies are usually the smallest in a given industry, and they probably experience higher per unit costs of regulation and higher costs for securing financing than do larger companies.

A further complication of financial analysis is that many coke-producing companies are wholly owned subsidiaries of larger, highly diversified corporations. Financial data are available for the parent corporations only. Analysis of these data will probably lead to the conclusion that the parent companies have ample resources to finance additional capital costs. However, the extent to which these corporations will make such investments, or will cease some coke operations in favor of other investment opportunities evidencing higher rates of return, cannot be determined without knowledge of the required return on investment specific to the firm and the other investment opportunities that exist for the firm.

Table 9-25 provides the capital costs as a percentage of average annual net investment by company for Regulatory Alternative II. The average annual net investment was calculated from financial records for each company by averaging net investment data (in constant 1983 dollars) for 1979 to 1983. These values are converted to 1984 dollars using an implicit GNP price deflator. In some instances less than 5 years of data were available. In the case of subsidiaries, net investment of parent companies was used. The regulatory alternative imposes capital costs as percentages of average annual net investments of less than 1 percent.

Table 9-26 shows capital cost as a percentage of cash flow for firms for which information is available. Cash flow data were derived from Table 9-14. The values for 1983 were converted to 1984 dollars using an implicit GNP price deflator. As for net investment, in the case of subsidiaries, cash flow of parent companies is used. Capital costs as percentages of cash flows range from 0 to 1.4 percent for the regulatory alternative.

The leverage ratios presented in Table 9-15 indicate that coke-producing firms are engaged in a substantial amount of external financing. These firms may be reticent (or unable) to borrow more heavily, especially in the current economic climate for steel. Furthermore, financing capital expenditures by issuing additional common stock would tend to dilute existing stockholder equity. Considering the low historical return on investment in

TABLE 9-25. CAPITAL COSTS OF COMPLIANCE AS A PERCENTAGE OF NET INVESTMENT REGULATORY ALTERNATIVE II--FURNACE COKE PRODUCERS, 1984[a]

Compliance cost scenario	Furnace coke producer[b]											
	A	B	C	D	E	F	G	H	I	J	K	L
Midrange estimates	0.1	0.3	0.1	0.4	0.2	0.2	0.3	0.0	0.4	0.3	0.1	0
Upper bound estimates	0.1	0.5	0.1	0.7	0.3	0.3	0.5	0.0	0.6	0.3	0.2	0

[a]Average annual net income calculated from company profiles in Moody's Industrial Manual, Moody's Investor Service, New York, 1984, and Standard New York Stock Exchange Reports, Standard and Poor Corp., New York, 1984. (Calculations were made on a constant 1983 dollar basis and converted to 1984 values using a GNP implicit price deflator.

[b]Data on annual investment are not available for two companies.

TABLE 9-26. CAPITAL COST AS A PERCENTAGE OF ANNUAL CASH FLOW REGULATORY ALTERNATIVE--FURNACE COKE PRODUCERS, 1984[a]

Compliance cost scenario	Furnace Coke Producers[b]											
	A	B[c]	C	D	E	F	G[c]	H	I	J	K	L
Midrange estimates	0.1	-	0.1	0.4	1.0	0.9	-	0.0	0.9	0.2	0.1	0
Upperbound estimates	0.1	-	0.2	0.6	1.4	1.3	-	0.0	1.3	0.2	0.2	0

[a]Cash flow data is from Table C-14 in Appendix C. Values are converted to 1984 dollars using a GNF implicit price deflator.

[b]There are three furnace coke producers for which cash flow data was not available.

[c]This company had negative cash flow.

the industry, this dilution would probably be unacceptable. An analysis of the iron and steel industry undertaken by Temple, Barker, and Sloane, Inc.,[63] addressed the question of external financing with regard to water pollution control expenditures. This analysis concludes that to avoid deterioration in its financial condition, the industry is likely to reduce expenditures to modernize production facilities rather than increase its external financing. In fact, as discussed in Section 9.1.5, capital expenditures for pollution abatement as a percentage of new capital expenditure are decreasing.

In summary, the capital costs of the regulatory alternatives are in the seven-to-ten-million dollar range. However, these amounts do not appear unduly burdensome when compared with normal investment expenditures or cash flow for companies for which data are available.

9.2.3.5 Battery and Plant Closures. Uneconomic batteries are those that have marginal costs of operation greater than the price of coke. Theoretically, these batteries are candidates for closure. There are 14 batteries operating in the uneconomic portion of the supply curve (above the point where priceline intersects the supply curve) under baseline conditions. They are owned by 10 companies and are located in 11 plants. Regulatory Alternative II adds one battery to this list. It is important to note, however, that this does not necessarily imply that the regulation would cause the closure of this battery.

The decision to close a battery is more complicated than the basic closure rule would indicate; this is particularly true for integrated iron and steel producers. Continued access to profits from continued steel production is a key factor in the closure decision for a captive battery. Before closing or idling a coke battery, managers would want to know where they would get coke on a reliable basis in order to continue making steel. The obvious sources to be investigated include other plants within the same company, other companies, and foreign suppliers. As noted in Section 9.1.4.1, some interregional and international movement of coke occurs.

Obtaining coke from offsite sources introduces two potential complications: the cost of transporting coke and the certainty of the coke supply. Obtaining coke from a nearby source might be the most profitable alternative to transporting coke. If coke must be shipped over long distances, onsite production at a cost above the projected market price might be more profitable.

If coke must be purchased, certainty of supply is a complication. Steel producers prefer to have captive sources of coke to safeguard against supply interruptions, and they may be willing to pay a premium for this security. Producing at a cost above market price would involve such a premium. Five of the fourteen uneconomic batteries under baseline compliance produce coke at marginal costs that are less than 5 percent above the market price. Five percent does not appear to be an excessive premium to pay for certainty of supply.

Several other factors could affect a particular plant's decision to close a battery. These factors relate to the relationship of coke quality to the type of steel commodities produced, the existence of captive coal mines, the costs of closing a battery and potential costs of restarting it in the future, and required control and other expenditures.

An alternative to closure for a financially troubled company is to file for Chapter 11 bankruptcy. This option allows firms to continue operating coke plants under a restructured debt payment schedule. Of firms owning the fourteen uneconomic batteries under baseline, one has filed for Chapter 11, and another is expected to file in the future if the steel industry continues to sustain large losses.[88] This action may improve a firm's competitive situation. McLouth Steel Corporation, which filed for bankruptcy in 1982, has modernized equipment and reduced overhead to enable it to capture market share from larger companies.

The demand model uses a single coke price, which represents an average quality of coke used to produce a weighted average mix of steel products. If high production costs for a particular battery are associated with a higher than average quality of coke, continued production might be justified. Production would also be justified if the firm produces only the most highly valued steel products.

Some coke-producing firms also own coal mines and may wish to secure continued access to profits from coal mining. Because profits in the coal sector may be subject to less effective taxation because of depletion allowances, these profits may be extremely attractive.

Furthermore, an integrated iron and steel producer must consider the question of necessary expenditures for its entire steel plant. If the steel facility is old or if substantial additional expenditures will be necessary to comply with regulations on other parts of the facility, then closure is more likely.

Closure decisions are so specific to individual situations and managers' perceptions regarding their future costs and revenues that exact projections of closures should be viewed with caution. In the current market for steel, it is difficult to say whether or not uneconomic batteries will be closed. Of companies owning uneconomic batteries, three have cut back capacity by closing batteries, though it is unknown whether they are those projected as candidates for closure.[88]

9.2.4 Foundry Coke Impacts

Oven coke other than furnace coke represents less than 15 percent of U.S. coke production. The majority of it is used as a fuel in the cupolas of foundries. The remainder is used for a variety of purposes, especially for heating.

Values of various foundry coke variables in the absence of the regulatory alternative are presented in Table 9-27. These values assume baseline compliance with the regulations listed in the footnote to the table.

9.2.4.1 Price and Production Effects. In developing the estimates of price and quantity impacts, a vertical shift caused by each regulatory alternative has been projected in the linear estimate of the foundry coke supply function generated under the regulatory baseline. This shift is used in conjunction with an estimated elasticity demand for foundry coke of -1.03, and is designated Import Scenario A. Under this scenario, domestically produced foundry coke does not compete with imported coke. This analysis also provides estimates of the effects of alternative regulations assuming that foundry coke producers must compete with imports in open market sales. In this case, consumers of foundry coke may purchase imported

TABLE 9-27. 1983 BASELINE VALUES FOR ECONOMIC IMPACT ANALYSIS--FOUNDRY COKE, 1983[95]

	Baseline values[a]
Coke market	
Price (1983 $/Mg)	169.58[b]
Production (10^3 Mg)	2,951
Consumption (10^3 Mg)	2,938
Employment (jobs)[c]	542
Coal Consumption (10^3 Mg)	3,809

[a]Baseline assumes companies meet existing regulations including OSHA (coke oven emissions); State regulations on desulfurization, pushing, coal handling, coke handling, quench tower, and battery stack controls; and BPT and BAT water regulations.

[b]Calculated. Market price for foundry coke was $149.66 in the fourth quarter of 1983.

[c]Calculated. Foundry coke employment = Employment in byproduct coke industry × proportion of coke production represented by foundry coke sector.

coke as a perfect substitute for domestically produced coke. The price of imports is assumed to be constant. As regulations cause less domestic coke to be produced, its price relative to imported coke rises. Consumers are able to purchase as much coke as before at the same price, but a larger proportion of sales is made up of imports. Thus, there are quantity effects for domestic producers, but no price effects. This shift is designated Import Scenario B. Impacts are assessed for both scenarios. Impacts for Import Scenario B represent the maximum effect of import substitution in the foundry coke market.

The projected price and quantity effects are shown on Table 9-28. Under Import Scenario A, both price and quantity impacts are less than 1 percent of baseline for Alternative II. Under Import Scenario B, there are no price impacts. Quantity impacts are a maximum of 2.8 percent of baseline.

9.2.4.2 Coal Consumption and Employment Effects. Any reductions in foundry coke production are expected to cause reductions in the use of the factors that produce the foundry coke. The major inputs to foundry coke production are coal and labor. Labor is also an important input in coal mining.

The coal consumption and employment implications of the projected reductions in coke production are shown in Table 9-29 for both scenarios. These values were developed assuming constant coal- and labor-output ratios. The employment impacts shown do not include any employment increases caused by the regulatory alternative. Consequently, the employment impacts represent maximum values.

Under both scenarios, effects on employment in the coal mining industry are negligible. Under Import Scenario A, coal consumption impacts or employment impacts in coke plants less than a 1 percent change from baseline. Under Import Scenario B, coal consumption and employment in coke plants are reduced by less than 3 percent.

9.2.4.3 Financial Effects. The aggregate capital costs of the regulatory alternatives are summarized in Table 9-30. The capital requirements to meet Regulatory Alternative II for the foundry coke industry are $2 to $3 million. Capital costs have also been summed across member plants to determine the cost to each company of meeting alternative regulations.

TABLE 9-28. PRICE AND QUANTITY EFFECTS OF REGULATORY ALTERNATIVE II--FOUNDRY COKE, 1984[a]

Compliance cost scenario	Coke price impact (1984 $/Mg)	Coke quantity impact (10^3 Mg/yr)
Midrange estimates		
Import Scenario A	1.13 (0.7)	-20 (-0.77)
Import Scenario B	0.00 (0.0)	-69 (-2.3)
Upper bound estimates		
Import Scenario A	1.34 (0.8)	-24 (-0.8)
Import Scenario B	0.00 (0.0)	-82 (-2.8)

[a]Values in parentheses are percentage changes from baseline.

[b]Coke consumption is not affected due to imports. Imports under Scenario B are equal in magnitude and of opposite sign to quantity impacts. Under Scenario A, imports are zero.

TABLE 9-29. COAL CONSUMPTION AND EMPLOYMENT EFFECTS OF REGULATORY ALTERNATIVE II--FOUNDRY COKE, 1984[a]

Compliance cost scenario	Coal consumption for coke (10^3 Mg/yr)	Employment (jobs)[b]	
		Coal mining[c]	Coke plant
Midrange estimates			
Import Scenario A	-26 (-0.7)	-7 (-0.7)	-3 (-0.7)
Import Scenario B	-89 (-2.3)	-25 (-2.3)	-13 (-2.3)
Upper bound estimates			
Import Scenario A	-31 (-0.8)	-9 (-0.8)	-4 (-0.8)
Import Scenario B	-106 (-2.8)	-30 (-2.8)	-15 (-2.8)

[a]Values in parentheses are percentage changes from baseline.

[b]Employment impacts are based on input-output relationships and production impacts. Impacts on coke plant employment do not include jobs created by the relevant controls.

[c]Annual labor productivity in coal mining is estimated as 3,515 megagrams per year per job.

[d]Zero due to rounding.

TABLE 9-30. INDUSTRY CAPITAL REQUIREMENTS OF REGULATORY ALTERNATIVE II--FOUNDRY COKE, 1984

Compliance cost scenario	Capital costs of regulations[a] (10^6 1984 $)
Midrange estimates	2
Upper bound estimates	3

[a]Calculated for all plants in operation in 1984.[48 50]

These company capital costs, along with firm-specific financial data, are used to produce the same financial percentages as described above for furnace coke, total capital cost as a percentage of net capital investment and of annual cash flow. Financial data are not available for many of the foundry coke producers that are privately held companies. Therefore, percentages for these companies are not included in the analysis.

Capital costs as percentages of average annual net investment for the foundry coke producers are provided in Table 9-31. The costs of moving from baseline to Regulatory Alternative II are never more than 3.3 percent of the average annual net investment. Foundry coke production plants operate at a significantly lower production rate for the same level of investment as compared with furnace coke production rates. This is due to the longer coking time for foundry coke. Furthermore, in looking at the available data on the age of the batteries used in the production processes within each plant, there appears to be a correlation between the age of the battery used and the level of compliance costs facing the firm. The data suggest that the foundry coke producing plants which are facing the highest pending compliance costs are operating with batteries which were installed between 1919 and 1946. Conversely, the foundry coke producers which are facing the lowest pending compliance costs are operating, for the most part, with batteries installed between 1950 and 1979.

Table 9-32 provides capital cost as a percentage of annual cash flow. The Regulatory Alternative results in capital costs no greater than 0.6 percent of cash flow for foundry coke producers for which information is available.

Firms would use internal financing, additional equity financing, debt financing, or perhaps some of the methods mentioned in Section 9.1.5, to make these capital expenditures. Since many of the foundry plants are owned by private corporations, data are insufficient to assess the eventual sources of capital that these firms will use. Therefore, only qualitative statements can be made concerning the impacts of financing regulatory investments. Any internal financing would reduce return on equity by directly reducing dividends or by reducing productive capital expenditures. Debt financing may reduce the return on equity by increasing the cost of

TABLE 9-31. CAPITAL COSTS OF COMPLIANCE AS A PERCENTAGE OF NET INVESTMENT REGULATORY ALTERNATIVE II--FOUNDRY COKE PRODUCERS, 1984[a]

Compliance cost scenario	Foundry coke producers[b]		
	AA	BB	CC
Midrange estimates	0.1	0.1	2.3
Upper bound estimates	0.2	0.1	3.3

[a]Average annual net investment calculated from company profiles in Moody's Industrial Manual, Moody's Investor Service, New York, 1984, Standard New York Stock Exchange Reports, Standard and Poor Corp., New York, 1984, and Dun and Bradstreet Financial Profiles, 1985. (Calculations were made on a constant 1983 dollar basis and converted to 1984 dollars using the GNP implicit price deflator.)

[b]There are eight foundry coke producers for which annual investment data are not available.

TABLE 9-32. CAPITAL COST AS A PERCENTAGE OF ANNUAL CASH FLOW REGULATORY ALTERNATIVE II--FOUNDRY COKE PRODUCERS, 1984[a]

Compliance cost scenario	Foundry coke producers[b]			
	AA	BB	CC	DD
Midrange estimates	0.1	0.1	0.4	0.2
Upper bound estimates	0.1	0.1	0.6	0.3

[a]Cash flow data is from Table C-14 in Appendix C. Values are converted to 1984 dollars using the GNP implicit price deflator.

[b]There are six foundry coke producers for which cash flow data was not available.

debt financing. Financing regulatory capital requirements using new common stock issues will have a tendency to dilute present owner's equity. This dilution could be substantial in cases where regulatory capital requirements are high. As an alternative, one foundry coke firm entered bankruptcy status. No information on the competitive status of this firm is available. For the firms for which data are available, the capital requirements of the regulatory alternative do not appear unduly burdensome.

9.2.4.4 Battery and Plant Closures. The decision rule used to indicate closure candidates among furnace batteries is also used for foundry batteries. Any foundry battery for which the marginal cost of operation is greater than the price of foundry coke is an uneconomic battery. According to this criterion and assuming baseline control, no batteries that were in operation in 1984 are uneconomic to operate. The regulatory alternative does not cause any batteries to move into the uneconomic region under either scenario.

9.3. POTENTIAL SOCIOECONOMIC AND INFLATIONARY IMPACTS

9.3.1 Compliance Costs

The estimated total annualized costs to coke producers for compliance with Regulatory Alternative II are shown in Tables 9-33 and 9-34. Costs for furnace and foundry producers are differentiated because of differences in coke prices and control costs per unit of output. The costs are for all plants in operation in 1984 are calculated. As shown in Table 9-33, in 1984, Regulatory Alternative II would result in compliance costs of $11 to $14 million per year for furnace coke producers. Compliance costs for foundry coke producers is shown in Table 9-34. For Regulatory Alternative II, this cost is $3 to $4 million per year. Combined compliance cost for furnace and foundry coke producers is $14 to $17 million per year.

9.3.2 Balance of Trade

Recent trends indicate that imports are decreasing. Imposition of the regulatory alternatives is expected to slow this trend. Some increase in steel imports is possible also. However, since steel price increases caused by coke price increases are projected to be quite small, any increase in imports caused by the regulatory alternatives should be minor. Moreover, trade regulations covering steel imports may mitigate such increases.

TABLE 9-33. COMPLIANCE COSTS OF REGULATORY ALTERNATIVE II--FURNACE COKE PRODUCERS, 1984

Compliance cost scenario	Compliance cost (10^6 1984 $/yr)
Midrange estimates	11.2
Upper bound estimates	13.9

TABLE 9-34. COMPLIANCE COSTS OF REGULATORY ALTERNATIVE II--FOUNDRY COKE PRODUCERS, 1984

Compliance cost scenario	Compliance cost (10^6 1984 $/yr)
Midrange estimates	3.0
Upper bound estimates	3.8

In the aggregate it appears unlikely that the regulatory alternative would significantly affect the U.S. balance of trade position, given the small share of international trade represented by coke imports.

9.3.3 Community Impacts

Furnace and foundry coke and steel production facilities are in Pennsylvania, Indiana, Ohio, Maryland, New York, Michigan, Illinois, Alabama, Utah, Kentucky, Tennessee, Texas, Missouri, Wisconsin, and West Virginia. Closure of coke facilities, if they occur, could have impacts on communities in these States. The regulatory alternatives are not necessarily projected to result in closures. Potential production decreases should not be sufficient to generate significant community impacts. However, compliance with other proposed regulations could result in additional battery and plant closures and the resulting community impacts.

9.3.4 Small Business Impacts

The Regulatory Flexibility Act (RFA) requires consideration of the potential impacts of proposed regulations on small "entities." A regulatory flexibility analysis is required for regulations which have a "significant economic impact on a substantial number of small entities." For the NESHAP for coke oven by-product plants, small entities can be defined as small furnace and foundry coke firms. The Environmental Protection Agency Office of Standards and Regulations recently drafted a memo on RFA compliance.[89] This section addresses the requirements that relate to the economic aspects of the RFA. Steps necessary for determination of applicability of the RFA are:

- Identification of small firms impacted by the NESHAP, and
- Estimation of the economic impact of the NESHAP on these small firms.

The guidelines for conducting a regulatory flexibility analysis define a small business as "any business concern which is independently owned and operated and not dominant in its field as defined by the Small Business Administration Regulations under Section 3 of the Small Business Act." The Small Business Administration (SBA) defines small firms in terms of employment. Firms owning coke ovens are included in SIC 3312, which also includes blast furnaces, steel works, and rolling mills. The SBA has determined

that any firm that is in SIC 3312 and employs less than 1,000 workers will be considered small under the Small Business Act.

Table 9-35 shows employment data for all U.S. firms that operate by-product coke ovens. Six firms in the list--9, 14, 16, 19, 20, and 23--can be designated as small based on SBA definitions. Because the standard being proposed is a NESHAP and all existing and new plants will be expected by law to comply, all plants of the small firms not currently in compliance could be adversely impacted. A "substantial number" of small business is defined as "more than 20 percent of these entities."[89] This rule implies that at least two firms be impacted to qualify as a "substantial number."

After the affected small firms are identified, the guidelines for the RFA require an estimate of the degree of economic impact. Four criteria are applied in assessing whether significant economic impact occurs from the regulation. The first criterion determines whether annual compliance costs increase average total production costs of small entities by more than 5 percent. None of the small firms identified was found to have an average cost increase greater than 5 percent.

A second criterion compares compliance costs as a percentage of sales for small entities with the same percentage for large entities. If the result for small entities is at least 10 percentage points higher than for large firms, the impact is considered significant. Based on net sales data in Table 9-14 and compliance cost data in Tables 9-31 and 9-32, no small company is significantly impacted. It should be noted that sales data are not available for all small entities.

The third criterion for assessing significant impact is whether capital costs of compliance represent a "significant" portion of capital available to small entities. The criterion recommends examining internal cash flow in addition to external sources of financing. Small, privately owned firms often do not report their annual investment expenditures, so that determination of capital availability is impossible. No financial data could be located for the small coke-producing firms previously identified. However, capital costs as percentages of net investment and cash flow for other firms in the industry are not substantial (see Table 9-25, 9-26, 9-31, and 9-32). Based on this information, the capital costs of compliance are not

TABLE 9-35. EMPLOYMENT DATA FOR U.S. FIRMS OPERATING COKE OVENS, 1983

Company	Employment
1	48,071
2	52,800
3	28,700
4	9,107
5	163,356
6	37,300
7	16,000
8	32,000
9	210
10	1,300
11	2,400
12	19,200
13	7,300
14	102
15	7,512
16	164
17	1,245
18	98,722
19	150
20	150
21	14,518
22	2,200
23	200

expected to represent a significant portion of capital available to small firms.

The final criterion is whether the requirements of the regulation are likely to result in closures of small entities. None of the small firms identified is projected to close as a result of the regulatory alternatives.

The regulatory alternatives are unlikely to result in adverse economic impact on a "substantial number" of small entities (as defined by SBA). Based on the four criteria used by the U.S. Environmental Protection Agency for which assessment may be made, no firm is expected to be "significantly impacted" under the second criterion. No significantly impacted firms were identified under the other rules.

9.3.5 Energy

The regulatory alternatives do not have any significant direct energy impacts. Although some indirect impacts are possible, they are likely to be minor in nature.

Indirect impacts could include the substitution of fossil fuels for coke in blast furnaces or an increase in use of electric furnaces, further reducing the coke rate. Some reduction is projected to occur in any case, but technological limits govern the degree to which the coke rate can be reduced. Furthermore, projected coke price increases are minor when compared to recent and projected fossil fuel price increases. Of course, if imports increase, fuel will be needed to transport them. Furthermore, if imports replace domestic coke production, excess coke oven gas, some of which is currently used in other parts of the steel plant, may be replaced by other fuels. But if steel production decreases, there will be some reduction in fuel consumption.

9.4 REFERENCES

1. Standard Industrial Classification Manual, 1972. Executive Office of the President, Office of Management and Budget. Washington, DC. U.S. Government Printing Office. 1972. p. 145.

2. 1982 Census of Manufactures. Preliminary Report, Industry Series. Blast Furnaces and Steel Mills (Industry 3312). Bureau of the Census, U.S. Department of Commerce. Washington, DC. MC82-I-33A-1(P). July 1984. p. 3.

3. Quarterly Coal Report, October - December 1982. Appendix A. Office of Coal, Nuclear, Electric, and Alternate Fuels, Energy Information Administration, U.S. Department of Energy. Washington, DC. DOE/EIA-0121(82/4Q). April 1983. p. 54-55.

4. Energy Data Reports: Coke and Coal Chemicals in 1979. Office of Coal and Electric Power Statistics, Energy Information Administration, U.S. Department of Energy. Washington, DC. DOE/EIA 0121(79). October 31, 1980. p. 33-37.

5. Research Triangle Institute. Coke Battery Survey and information from the American Coke and Coal Chemicals Institute and the American Iron and Steel Institute. Unpublished data. 1984.

6. Minerals Yearbook. Bureau of Mines, U.S. Department of the Interior. Washington, DC. 1950-1978. (Table and page numbers vary because of reclassifications.)

7. Statistical Abstract of the United States: 1978. Table 710. 99th Edition. Bureau of the Census, U.S. Department of Commerce. Washington, DC. 1978. p. 441.

8. Statistical Abstract of the United States: 1984. Table 735. 104th Edition. Bureau of the Census, U.S. Department of Commerce. Washington, DC. 1984. p. 449.

9. Reference 7. Table 1511. p. 874.

10. Historical Statistics of the United States: Colonial Times to 1970. Part 2. Bureau of the Census, U.S. Department of Commerce. Washington, DC. 1975. p. 904-905.

11. U.S. Exports--Domestic Merchandise, SIC-Based Products by World Areas. Bureau of the Census, U.S. Department of Commerce. Washington, DC. FT610/Annual. 1978-1984.

12. U.S. Imports--Consumption and General, SIC-Based Products by World Areas. Bureau of the Census, U.S. Department of Commerce. Washington, DC. FT210/Annual. 1978-1981, 1983-1984.

13. U.S. General Imports--Schedule A, Commodities by Country. Bureau of the Census, U.S. Department of Commerce. Washington, DC. FT135/November 1981. 1982. p. 46.

14. Survey of Current Business. Vol. 64, No. 10. Bureau of Economic Analysis, U.S. Department of Commerce. Washington, DC. October 1984. p. S16-S17.

15. Reference 8. Table 1471. p. 832.

16. Quarterly Coal Report, April-June 1984. Appendix A. Office of Coal, Nuclear, Electric, and Alternate Fuels, Energy Information Administration, U.S. Department of Energy. Washington, DC. DOE/EIA-0121(84/2Q). October 1984. p. 54, 61.

17. Energy Data Reports: Coke and Coal Chemicals in 1978. Office of Energy Data Operation, Energy Information Administration, U.S. Department of Energy. Washington, DC. 1980. p. 3-5.

18. Coke and Coal Chemicals in 1980. Office of Coal, Nuclear, Electric and Alternate Fuels. Energy Information Administration, U.S. Department of Energy. Washington, DC. DOE/EIA 0120(80). November 1981. p. 4.

19. Reference 8. Table 799. p. 486.

20. 1977 Census of Manufactures. Bureau of the Census, U.S. Department of Commerce, U.S. Government Printing Office. Washington, DC. 1979. p. 2.

21. 1972 Census of Manufactures. Bureau of the Census, U.S. Department of Commerce, U.S. Government Printing Office. Washington, DC. 1976. p. 33A-6.

22. Statistical Abstract of the United States: 1980. Table 724. 101st Edition. Bureau of the Census, U.S. Department of Commerce. Washington, DC. 1980. p. 437.

23. 1984 U.S. Industrial Outlook. 25th Edition. Bureau of Industrial Economics, U.S. Department of Commerce. Washington, DC. January 1984. p. 18-3.

24. Standard and Poor's, Inc. Steel and Heavy Machinery--Basic Analysis. Industry Surveys. Vol. 152, No. 43, Sec. 1. New York. October 1984. p. S15.

25. Quarterly Coal Report, October - December 1983. Appendix A. Office of Coal, Nuclear, Electric, and Alternate Fuels, Energy Information Administration, U.S. Department of Energy. Washington, DC. DOE/EIA-0121(83/4Q). April 1984. p. 55.

26. Reference 4. p. 3-5.

27. Reference 18. p. 3-5.

28. Analysis of the U.S. Metallurgical Coke Industry. Industrial Economics Research Institute. Fordham University. October 1979. p. 41.

29. Reference 28. p. 40.

30. Quarterly Coal Report, January - March 1984. Appendix A. Office of Coal, Nuclear, Electric, and Alternate Fuels, Energy Information Administration, U.S. Department of Energy. Washington, DC. DOE/EIA-0121(84/1Q). July 1984. p. 62.

31. Telecon. Peterson, J., U.S. Steel Corporation, with Lohr, L., Research Triangle Institute. December 10, 1984. Operational status of cold idle coke batteries.

32. Kerrigan, Thomas J. Influences upon the Future International Demand and Supply for Coke. Ph.D. dissertation. Fordham University. New York. 1977. p. 14, 114.

33. Reference 4. p. 1.

34. Reference 4. p. 13.

35. Reference 25. p. 54.

36. Standard Support and Environmental Impact Statement: Standards of Performance for Coke Oven Batteries. Emissions Standards and Engineering Division, Environmental Protection Agency. May 1976. p. 3-7.

37. Mineral Commodity Summaries, 1984. Bureau of Mines, U.S. Department of the Interior. Washington, DC. 1984. p. 78.

38. The Outlook for Metallurgical Coal and Coke. Institutional Report. Merrill Lynch, Pierce, Fenner, and Smith, Inc. 1980. p. 3.

39. Reference 28. p. i.

40. Reference 28. p. ii-iii.

41. Reference 38. p. 1.

42. Reference 38. p. 5.

43. PEDCo Environmental, Inc. Technical Approach for a Coke Production Cost Model. 1979. p. 39-50.

44. Reference 18. p. 33-35.

45. Energy Data Reports: Distribution of Oven and Beehive Coke and Breeze. Office of Energy Data and Interpretation, Energy Information Administration, U.S. Department of Energy. Washington, DC. April 10, 1979. p. 7-8.

46. The Politics of Coke. 33 Metal Producing. March 1980. p. 49-51.

47. DeCarlo, J. A., and M. M. Otero. Coke Plants in the United States on December 31, 1959. Bureau of Mines, U.S. Department of the Interior. Washington, DC. 1960. p. 4-10.

48. Staff Report on the United States Steel Industry and Its International Rivals: Trends and Factors Determining International Competitiveness. Bureau of Economics, Federal Trade Commission, U.S. Government Printing Office. Washington, DC. November 1977. p. 53.

49. Schottman, Frederick J. Iron and Steel. Mineral Commodity Profiles, 1983. Bureau of Mines, U.S. Department of the Interior. Washington, DC. 1983. p. 4-5.

50. Reference 18. p. 3-4,8.

51. Reference 3. p. 53-55,58.

52. Reference 25. p. 53-55,58.

53. Reference 4. p. 3-4,8.

54. Moody's Investors' Service. Moody's Industrial Manual. Vol. 1 and 2. New York. 1984.

55. Moody's Investors' Service. Moody's OTC Manual. New York. 1984.

56. Standard and Poor's Corp. Standard and Poor's New York Stock Exchange Stock Reports. New York. 1984.

57. Dun and Bradstreet, Inc. File reports printed for use of Research Triangle Institute. January 31, 1985.

58. Reference 24. p. S16.

59. Temple, Barker, and Sloane, Inc. An Economic Analysis of Proposed Effluent Limitations Guidelines, New Source Performance Standards, and Pretreatment Standards for the Iron and Steel Manufacturing Point Source Category. Exhibit 6. Lexington, Massachusetts. December 1980.

60. Annual Survey of Manufactures. Bureau of the Census, U.S. Department of Commerce. Washington, DC. 1975 - 1982.

61. 1977 Census of Manufactures. Vol. II. Industry Statistics. Part 2, SIC Major Groups 27-34. Bureau of the Census, U.S. Department of Commerce. Washington, DC. August 1981. p. 33A-15.

62. Pollution Abatement Costs and Expenditures. Current Industrial Reports. Bureau of the Census, U.S. Department of Commerce. Washington, DC. MA-200(year). 1975 - 1983.

63. Reference 59. p. VI-4.

64. Reference 24. p. S28-S29.

65. Reference 23. p. 18-5.

66. Reference 8. Table 1408. p. 788.

67. Reference 24. p. S22-S25.

68. Reference 49. p. 3.

69. Reference 24. p. S21.

70. Reference 23. p. 18-4.

71. Reference 49. p. 14.

72. Reference 24. p. S3.

73. Reference 24. p. S19-S20.

74. Reference 25. p. S1.

75. Economic Report of the President, February 1984. U.S. Government Printing Office. Washington, DC. 1984. p. 224.

76. Reference 14. p. S-6.

77. Reference 28. p. 63-111.

78. Reference 43. p. 1-69.

79. Letter from Young, E. F., American Iron and Steel Institute, to Pratopos, J., U.S. Environmental Protection Agency. May 16, 1980.

80. Reference 43. p. 5.

81. Reference 43. p. 85.

82. Research Triangle Institute. Economic Impact of NSPS Regulations on Coke Oven Battery Stacks. Research Triangle Park, NC. May 1980. p. 8-46, 8-47.

83. Research Triangle Institute. An Econometric Model of the U.S. Steel Industry. Research Triangle Park, NC. March 1981.

84. Ramachandran, V. The Economics of Farm Tractorization in India. Ph.D. dissertation. North Carolina State University. Raleigh, NC. 1979.

85. Heckman, James J. Shadow Price, Market Wages, and Labor Supply. Econometrica. 42:679-694. July 1974.

86. Reference 24. p. S16, S27.

87. Reference 25. p. 55-57,61.

88. Symonds, William C., and Gregory L. Miles. It's Every Man for Himself in the Steel Business. Business Week. (2897):76,78. June 3, 1985.

89. Memorandum from Smith, C. Ronald, Office of Standards and Regulations, U.S. Environmental Protection Agency, to Steering Committee Representatives, EPA. April 12, 1983. pp. 1-2 and Attachment 1. Guidelines for compliance with Regulatory Flexibility Act.

APPENDIX A

EVOLUTION OF THE PROPOSED STANDARDS

APPENDIX A - EVOLUTION OF THE PROPOSED STANDARDS

Work on development of standards for coke oven emissions was officially begun in March 1975. The initial effort was directed at limiting particulate emission discharges from coke oven charging, and topside leaks at charging lids, offtakes, and collecting mains. A study contracted by the Environmental Protection Agency in March 1975 provided information on the history and trends of the byproduct coking industry, industry statistics, processes and emissions, emission control technology and economics. In this initial effort six United States plants that were reported to have the best emission control were visited. Those plants were as follows:

Plants Visited

U.S. Steel, Clairton, Pennsylvania
U.S. Steel, Fairfield, Alabama
Allied Chemical, Detroit, Michigan
Bethlehem Steel, Franklin & Rosedale Plants, Johnstown, Pennsylvania
Inland Steel, East Chicago, Indiana
Jones and Laughlin, Aliquippa, Pennsylvania

Prior to and during the data gathering process, discussions were held with individual steel companies. Meetings were also held with an Ad Hoc Committee of the American Iron and Steel Institute (AISI) on March 25, 1974, August 16, 1974, and May 8, 1975.

Other meetings were held to review the project with the National Air Pollution Control Techniques Advisory Committee (NAPCTAC) on February 26, 1975, and April 9, 1975, and an EPA Working Group on February 11, 1975. The NAPCTAC is composed of 16 people from industry, state and local air pollution control agencies, and environmental groups and others with expertise in air pollution control. The NAPCTAC meetings were open to the public and were attended by representatives of the steel industry and other interested persons.

The EPA Working Group is composed of representatives of various offices within the Agency.

At the May 8, 1975 meeting with AISI, the NAPCTAC meetings and the first two meetings with the Working Group, the following recommended standards were discussed:

a. No owner or operator shall cause to be discharged into the atmosphere during charging of a coke oven any emissions which are visible in excess of 20 seconds per charge when averaged over 18 consecutive charges.

b. No owner or operator shall cause to be discharged into the atmosphere from: (1) the standpipes of a coke oven battery any visible emissions from more than 10 percent of the total number of standpipes, and (2) the charging holes or ports of a coke oven battery when in place and sealed any visible emissions from more than 2 percent of the total number of charging holes.

At both the August 1975 Working Group and the September 1975 NAPCTAC meetings concern was expressed by environmental groups and EPA enforcement personnel that the recommended emission limits for charging and topside leaks were too lenient. It was suggested that the data gathered at U.S. Steel, Clairton Works and U.S. Steel, Fairfield Works which formed the data base for the recommended standards, did not reflect present levels of control at either plant. Because of the efforts of local control agencies, control at these plants had reportedly improved significantly since tested by EPA in 1974. To verify this reported improved control, additional emission tests were conducted by EPA at both plants in the fall of 1975.

The results of these tests were presented at the December 18, 1975, NAPCTAC meeting. Based on these tests, new recommendations were drafted. These recommended emission limits were discussed at the February 1976 Working Group meeting and were as follows:

No owner or operator shall cause to be discharged into the atmosphere:

(a) Any visible emissions from any charging system and charging ports for more than 90 seconds for any 10 or less consecutive charging periods.

(b) Any visible emissions from more than 12 percent of the offtake systems.

(c) Any visible emissions from any collection main.

(d) Any visible emissions from more than two percent of the charging ports except for oven lids which are removed during coke oven battery charging periods and during decarbonizaton periods.

In May 1976 a draft report entitled "Standards Support and Environmental Impact Statement: Standards of Performance for Coke Oven Batteries" was published and circulated to obtain comments on technical accuracy and policy implications.

Insufficient emission data on tall batteries delayed further consideration of the recommended emission limits. Plant visits to gather additional data on charging emissions and topside leaks were made to Bethlehem Steel's Bethlehem plant and U.S. Steel's Fairfield plant late in 1976 and early 1977.

Growing attention to the presence of carcinogenic substances in coke oven emissions led to a decision on April 8, 1977 to develop National Emission Standards for Hazardous Pollutants (NESHAP) contained in coke oven emissions. In the second week of May 1977 tests were performed at the Wisconsin Steel coke plant. Measurements were made of particulate and POM concentrations at the inlet and outlet of a wet electrostatic precipitator applied to a coke-side shed. Sampling was performed during non-pushing periods when door leaks could be characterized.

At a steering committee meeting on August 26, 1977 a development plan for NESHAPs was reviewed. Approval was withheld pending resolution of certain issues.

During the summer and fall of 1977 several plant visits were made to the U.S. Steel Gary coke plant to perform measurements of tall oven stage charging emissions.

In December 1977 EPA contracted for a study of retrofit information and other data essential to determining problems in fitting existing batteries with controls for charging and topside leak emissions. A report entitled, "Study to Develop Retrofit Information and Other Data for Use in Setting Standards for Coke Oven Emissions" was issued in March 1978.

A Working Group Meeting was held April 26, 1978 to review the issues and standards development of the coke oven NESHAPs.

On May 5, 1978 a Section 114 letter was sent to U.S. Steel requesting self-inspection data on topside leaks from Batteries 16 and 17 at Clairton Works covering the period of January 1977 through February 1978.

The health risk assessment for coke ovens was reviewed by EPA's Science Advisory Board on May 30-31, 1978.

In June 1978, a draft document entitled, "Standards Support and Environmental Impact Statement: Volume I: Proposed National Emission Standards By-Product Coke Oven Wet-Coal Charging and Topside Leaks" was published and circulated for review prior to a scheduled July NAPCTAC meeting.

At the NAPCTAC meeting held on July 11-12, 1978, a presentation entitled "National Emission Standards for By-Product Coke Oven Wet-Coal Charging and Topside Leaks" was given. The proposed standard presented for charging emissions was that accumulative visible emissions from charging could not exceed 88 seconds for 8 consecutive charges. Leakage topside was proposed to be limited to 2 percent of the charging lids, 5 percent of the offtakes, and zero leaks from the collecting main. Following this meeting the work on standard development for charging and topside leaks was delayed to examine OSHA considerations and to permit standard development for door leaks to proceed to a similar point for simultaneous consideration. The principal concern with OSHA regulations was potential overlap between the OSHA regulations and any that might be developed for coke oven sources. It was necessary to determine whether OSHA regulations were sufficient to limit emissions to protect public health.

On August 29, 1978 a Section 114 letter was sent to Jones and Laughlin Steel to obtain additional cost data for charging emission control.

To initiate development of a standard for leaking coke oven doors, EPA contracted for a study of coke oven door emission control technology in April 1978. Further important events that have occurred in the development of background information are presented below in chronological order.

Date	Activity
July 6, 1978	Visit by EPA contractor to Battelle Memorial Institute's coke oven door study laboratory.
August 8, 1978	Plant visit to Koppers coke plant in Erie, Pennsylvania to examine hand luted technology.
August 22, 1978	Plant visit to Jones and Laughlin coke plant at Pittsburgh, Pennsylvania to discuss door and jamb modifications.

September 8, 1978	Plant visit to U.S. Steel coke plant at Clairton, Pennsylvania to discuss door and jamb modifications.
October 4, 1978	Plant visit to Jones and Laughlin coke plant at Pittsburgh, Pennsylvania to obtain a tar sample.
October 5, 1978	Plant visit to Koppers coke plant in Erie, Pennsylvania to obtain a tar sample.
October 6, 1978	Plant visit to Jim Walters Resources coke plant at Birmingham, Alabama to obtain tar samples.
October 26, 1978	Plant visit to Bethlehem Steel coke plant at Baltimore, Maryland to obtain a tar sample.
November 29, 1978	Door project review meeting to discuss potential formats for the standard and essential test data.
January 15, 1979	Meeting between Standards Support Sections and EPA contractor to discuss the relationship of OSHA regulations to potential EPA standards for doors, charging, and topside leaks.
February 14, 1979	Plant visit to Armco Steel coke plant at Houston, Texas to discuss door hood system and cokeside shed.
February 14, 1979	Official letter redirecting efforts of contractor toward a study of the comparability of OSHA regulations with potential EPA regulations.
June 1, 1979	Work resumed on coke oven door leak standard development.
July 12, 1979	Section 114 letters with questionnaire mailed to Jones and Laughlin, Bethlehem Steel, Kaiser Steel, Koppers, United States Steel, and Allied Chemical.
July 23, 1979	Initial test request was submitted to EMB.
September 7, 1979	Meeting between Emission Standards and Engineering Division and EPA contractor to discuss resumption of work on standards development for wet-coal charging and topside leaks to be combined with door leaks standard development.

September 11, 1979	Plant visit to Bethlehem Steel, Bethlehem, Pennsylvania to read door emissions.
September 12, 1979	Plant visit to Koppers coke plant in Erie, Pennsylvania to read door emissions.
September 18, 1979	Plant visit to National Steel coke plant at Detroit, Michigan to read door emissions.
September 20, 1979	Plant visit to Kaiser Steel coke plant in Fontana, California to read door emissions.
October 1-5, 1979	Plant visit to Armco Steel coke plant in Houston, Texas to test door emissions captured by coke-side shed.
November 21, 1979	Meeting between Emission Standards and Engineering Division to review coke oven standards development for wet-coal charging, topside leaks, and door leaks.
January 22, 1980	Input data for the economics study transmitted to EPA.
April 22, 1980	Meeting with American Iron and Steel Institute coke oven committee to discuss standard development.
June 24, 1980	EPA Working Group meeting conducted.
July 15, 1980	Meeting with American Iron and Steel Institute coke oven committee.
August 26-27, 1980	National Air Pollution Control Techniques Advisory Committee (NAPCTAC) meeting conducted.
January 13, 1981	Meeting with American Iron and Steel Institute coke oven committee.
April 21, 1981	EPA Steering Committee meeting conducted.
June 26, 1981	Assistant Administrator concurrence package prepared. Package returned unreviewed pending completion of the listing notice.

August 3, 1982	Science Advisory Board (SAB) review of the listing notice. Listing notice postponed pending revisions and responses to SAB's comments.
March 12, 1984	EPA Working Group Meeting conducted.
September 13, 1984	Plant visit to U.S. Steel's coke plant, Clairton, Pennsylvania, to gather data on emission controls and costs.
September 17, 1984	Plant visit to Bethlehem Steel's coke plant, Sparrows Point, Maryland, to gather data on emission controls and costs.
Sepbember 18, 1984	Coke oven emissions listed as a hazardous air pollutant.
September 19, 1984	Plant visit to Empire Coke's plant, Holt, Alabama, to gather data on emission controls and costs.
September 21, 1984	Plant visit to Armco's coke plant, Middletown, Ohio, to gather data on emission controls and costs.
November 29, 1984	Meeting with American Iron and Steel Institute coke oven committee.
February 2, 1985	Briefed representatives of State air pollution agencies on the status of regulatory development for coke oven emissions.
May 1, 1985	National Air Pollution Control Techniques Advisory Committee (NAPCTAC) meeting conducted.

APPENDIX B

INDEX TO ENVIRONMENTAL IMPACT CONSIDERATIONS

APPENDIX B

INDEX TO ENVIRONMENTAL IMPACT CONSIDERATIONS

Agency guidelines for preparing regulatory action environmental impact statements (39 FR 37419)	Location within the Background Information Document
1. Background and description	
a. Summary of regulatory alternatives	The regulatory alternatives from which standards will be chosen for proposal are discussed in Chapter 6, Section 6.2.
b. Statutory basis for proposing standards	The statutory basis for proposing standards is summarized in Chapter 2.
c. Relationship to other regulatory agency actions	The various relationships between the regulatory agency actions are discussed in Chapters 3, 7, and 8.
d. Industry affected by the regulatory alternatives	A discussion of the industry affected by the regulatory alternatives is presented in Chapter 3, Section 3.1, pages 3-1 through 3-6. Further details covering the "business/economic" nature of the industry is presented in Chapter 9, Section 9.1.
e. Specific processes affected by the regulatory alternatives	A detailed technical discussion of the sources and processes affected by the regulatory alternatives is presented in Chapter 3, Section 3.2.

(continued)

INDEX TO ENVIRONMENTAL IMPACT CONSIDERATIONS (continued)

Agency guidelines for preparing regulatory action environmental impact statements (39 FR 37419)	Location within the Background Information Document
2. Impacts of the alternatives	
a. Air pollution	The air pollution impacts of the alternatives are discussed in Chapter 7.
b. Water pollution	The water pollution impacts of the alternatives are discussed in Chapter 7.
c. Solid waste disposal	The impact on solid waste disposal is discussed in Chapter 7.
d. Energy impact	The energy impacts are discussed in Chapter 7.
e. Economic impact	The economic impacts are discussed in Chapter 9.

APPENDIX C

EMISSION SOURCE TEST DATA

APPENDIX C

EMISSION SOURCE TEST DATA

Tables C-1 through C-14 present the visible emission data for charging. The footnotes on Tables C-1 through C-14 are notations made by observers for individual readings of visible emissions. These notations include deviations from best emission control practices; such deviations were caused by observed and suspected lapses in good work practices or equipment failure. Cases of interference with observer readings caused by fugitive emissions from other sources such as door leaks or burning coal are also noted. The data points associated with observer interference were not judged to be accurate measurements of charging emissions and were deleted from the data base. However, all the remaining data are included in the data base and in the statistical analysis.

Tables C-15 through C-22 present the visible emission data gathered by the Environmental Protection Agency (EPA) for door leaks. The U.S. Steel, Clairton batteries and Batteries B, C, and D at CF&I have modified doors and a door program with repair and maintenance procedures. Battery 2 at U.S. Steel, Fairfield is a 6-meter battery, and Battery 9 is a rebuilt 4-meter battery. Kaiser Steel uses operating and maintenance procedures with its Koppers doors, and the Koppers batteries in Erie represent hand-luted door control. The data on National Steels' Battery 5 are for 6-meter ovens equipped with Ikio doors.

Data for percent leaking lids are presented in Tables C-23 through C-32. The data on visible emissions from offtakes are compiled in Tables C-33 through C-37.

The following are brief descriptions of the batteries that are included in the data base. The dates in parentheses are the dates of initial operation or the most recent rebuild.

U.S. Steel, Clairton, Pennsylvania

All batteries--Metallurgical coke, double mains, gravity feed, manual lid lifters, four (14 in) charging holes, visible emissions observer, and extensive worker training program with monitoring of worker performance. The company has conducted engineering studies to optimize its stage charging procedures and to implement improved door leak controls.

Batteries 1, 2, and 3 (1955)--Sixty-four Wilputte ovens each, 3.6 meters in height, and charges 15.6 tonnes of coal per oven. To be pad up rebuilt or replaced in 1986.

Batteries 7, 8 (1954), and 9 (1964)--Sixty-four Koppers ovens each, 3.6 meters in height, and charges 15.6 tonnes of coal per oven. To be abandoned in 1983 and replaced by new Battery C in 1984.

Batteries 10, 11 (1957), and 12 (1958)--Sixty-four Wilputte ovens each, 3.6 meters in height, and charges 15.6 tonnes of coal per oven. Battery 12 was abandoned in 1979, and Batteries 10 and 11 are to be replaced by new Battery B in 1983.

Battery 12A (1948)--Eighty-five Koppers ovens, 3 meters in height, and charges 12.5 tonnes of coal per oven. Abandoned in June 1979.

Batteries 13, 14, (1953), and 15 (1953/1979)--Sixty-one Koppers ovens each, 3.6 meters in height, and charges 16.3 tonnes of coal per oven. Batteries 13 and 14 are being pad up rebuilt to operate in 1980. Battery 15 had a pad up rebuild in 1979.

Batteries 16 and 17 (1951)--Sixty-one Wilputte ovens each, 3.6 meters in height, and charges 16.8 tonnes of coal per oven. Battery 17 has a cokeside shed. To be abandoned in 1982. End flue repairs in 1975.

Batteries 19 (1951/1976) and 20 (1951/1978)--Eighty-seven Koppers-Becker underjet ovens each, 4.3 meters in height, and charges 20.8 tonnes of coal per oven.

Battery 21 (1947)--Eighty-seven Koppers-Becker underjet ovens, 4.3 meters in height, and charges 20.8 tonnes of coal per oven. Rebuilt from the floor up in 1972. Pad up rebuild planned for 1986-1989.

Battery 22 (1946)--Eighty-seven Koppers-Becker underjet ovens, 4.3 meters in height, and charges 20.8 tonnes of coal per oven. Plan pad up rebuild in 1986-1989.

U.S. Steel, Fairfield, Alabama

Battery 2 (1978)--Fifty-seven Carl Still ovens, 6.2 meters in height, four (17 in) charging holes, magnetic lid lifters, mechanical gooseneck cleaners, screw feed, wet or dry coal, and double main. Replaced Batteries 3 and 4.

Battery 6 (1957)--Seventy-seven Koppers ovens, 3.4 meters in height, gravity feed, single main with jumper pipe, and charges 14.7 tonnes of coal per oven. May be replaced or rebuilt in 1981-1982. Mechanical repairs in 1973.

Battery 9 (1954/1979)--Sixty-three Koppers-Becker ovens, 4.3 meters in height, four (14 in) charging holes, single main with jumper pipe, gravity feed, mechanical gooseneck cleaner, and charges 18.1 tonnes of coal per oven. Major repairs in 1972, mechanical repairs in 1974, pad up rebuild in 1978.

U.S. Steel, Gary, Indiana

Battery 1 (1970)--Eighty-five Koppers-Becker underfired ovens, 6.2 meters in height, four (17 in) charging holes, disc cutter elbow cleaners, magnetic lid lifters, turntable feed, and charges 34.3 tonnes of coal per oven. Retrofitted a second main, down for flue repairs and back in operation in late 1979.

CF&I, Pueblo, Colorado

All batteries--CF&I conducted an extensive study to optimize stage charging and to improve door leak controls. The company uses visible emission monitoring and a training program.

Battery B (1972)--Sixty-five Koppers ovens, 4 meters in height, four (16 in) charging holes, double main, magnetic lid lifters, screw feed, hydraulic gooseneck cleaner, and charges 18.7 tonnes of coal per oven. No major repairs anticipated.

Battery C (1974)--Forty-seven Koppers ovens, 4 meters in height, four (16 in) charging holes, double main, magnetic lid lifters, screw feed, hydraulic gooseneck cleaner, and charges 18.7 tonnes of coal per oven. No major repairs anticipated.

Battery D (1930/1960)--Thirty-one Koppers ovens, 4 meters in height, four (16 in) charging holes, double main, magnetic lid lifters, screw feed, hydraulic gooseneck cleaner, and charges 18.7 tonnes of coal per oven. Flue repairs in 1974.

Kaiser, Fontana, California

Batteries F and G (1959)--Forty-five Koppers-Becker ovens each, 4 meters in height, three (14 in) charging holes, double main, table feed, and charges 15 tonnes of coal per oven. Flue rebuild planned for 1982-1983.

Koppers, Erie, Pennsylvania

Batteries A (1952) and B (1943)--Fifty-eight Wilputte ovens each, 3.6 meters in height, foundry coke, luted doors, and charges 16.6 tonnes of coal per oven. Cold shut down in 1967, restarted by Koppers in 1971. Good condition, no major repairs anticipated.

J&L Steel, Pittsburgh, Pennsylvania

Battery P2 (1961)--Fifty-nine Wilputte ovens, 4 meters in height, three (17 in) charging holes, single main with jumper pipes, rotating table feed, and charges 17.3 tonnes of coal per oven. Flue repairs in 1977, at least 10 years of operation remaining.

Battery P4 (1953)--Seventy-nine Koppers-Becker underjet ovens, 4 meters in height, three (17 in) charging holes, single main with jumper pipes, gravity feed, magnetic lid lifters, and charges 17.2 tonnes of coal per oven. Flue repairs in 1977.

Lone Star Steel, Lone Star, Texas

Battery C (1979)--Seventy Koppers ovens, 5 meters in height, and double main. New battery.

Shenango Inc., Neville Island, Pennsylvania

Battery 3 (1950) and 4 (1952)--Thirty-five Koppers-Becker underjet ovens each, 4 meters in height, three (16 in) charging holes, double main, gravity feed, and merchant, foundry, and metallurgical coke. A 30-hour cycle time was in effect during the October 1980 inspection. Furnace walls rebuilt in 1974-1975. Battery 3 may require pad up rebuild.

Bethlehem Steel, Burns Harbor, Indiana

Battery 2 (1972)--Eighty-two Koppers ovens, 6 meters in height, double main, screw feed, magnetic lid lifters. New larry cars in 1979.

National Steel, Weirton, West Virginia

Battery 1 (1973)--Eighty-seven Koppers ovens, 6 meters in height, double main, screw feed, automatic lid lifters.

Sampling was conducted at Armco, Inc. in Houston, Texas, to measure door leak emissions which were collected by a cokeside shed. These emissions

were sampled at the inlet and outlet of the wet electrostatic precipitator (WESP) during nonpush periods in an attempt to measure emissions from door leaks alone. The purpose of this sampling was to attempt a correlation between mass emissions at the WESP inlet and low values of percent leaking doors (PLD). Unfortunately, the door leakage rate ranged from 27 to 45 PLD; therefore, a correlation of mass emissions with very low percent leaking doors values could not be obtained.

Samples were analyzed for benzene soluble organics (BSO) and benso(a)-pyrene (BaP) using EPA draft methods dated July 3, 1978, and March 20, 1978, respectively. The level of benzene was determined by Draft Method 111, and door leak observations were recorded according to Part C of Draft Method 109.

Three test runs were conducted. The first run was not considered typical of normal operation because the plant was operating on an extended coking cycle because of equipment failures. The runs for Tests 2 and 3 were conducted under normal operating conditions--a coke production rate of 820 tonnes per day. An average of 34 PLD was observed under the cokeside shed during Tests 2 and 3.

The BSO results in Table C-38 show a removal efficiency of 40 to 60 percent. This low efficiency occurred because one of the two parallel WESPs was inoperative during the tests. BaP results are shown in Table C-39. The BaP rates for Tests 2 and 3 were two to three times higher at the stack than at the WESP inlet. There was no obvious explanation for these anomalous results.

The benzene data (Table C-40) ranged from 1 to 3 ppm at both the inlet and outlet of the WESP. This measurement translates into a benzene emission rate of 0.6 to 2.4 kilograms per hour.

Table C-41 lists the results of leaking door observations for the three tests. Although relatively low PLD numbers were obtained for Test 1, these low values result from an extended coking time. Tests 2 and 3 are considered representative of normal production.

TABLE C-1. DATA ON VISIBLE EMISSIONS FROM CHARGING, CF&I, BATTERY B

Date	Oven no.	Duration of visible emissions (seconds) Observer 1	Observer 2	Observer 3
7-26-77	C2	3	8	4
	A4	3	5	6
	B4	4	9	7
	C4	2	4	2
	A6	4	7	4
	B6	7	6	7
	C6	3	4	3
	A8	6	9	5
	B8	3	6	5
	C8	7	9	5
	A10	3	5	2
	B10	7	2	2
	C10	2	2	1
	A12	7	10	6
	B12	5	9	6
	A22	7	6	9
	B22	6	11	7
	A1	3	3	1
	B1	4	6	11
	C1	4	3	2
Mean = 5.2				
7-27-77	C12	3	6	1
	B12	4	5	5
	B14	8	11	9
	C14[a]	15	8	10
	A16	3	4	1
	B16	2	2	3
	C16	5	3	2
	A18	2	2	1
	B18	3	2	1
	C18	3	4	1
	A20	0	1	1
	B20	3	0	2
	A22[a]	19	20	25
	A9	7	5	6
	B9	8	5	12
	C9	5	4	5
	A11	6	6	6
	B11	9	6	11
	C11	5	8	5
	A13	3	4	7
Mean = 5.6				
7-28-77	B3[b]	10	10	15
	C3	2	2	5
	A5	10	7	8
	B5	7	4	4
	C5	4	5	4
	A7[c]	15	12	20
	B7	9	8	8
	C7	5	5	5
	A9	14	10	17
	B9	6	4	4

(continued)

TABLE C-1. (continued)

Date	Oven no.	Duration of visible emissions (seconds) Observer 1	Observer 2	Observer 3
7-28-77	C9[d]	5	4	3
	A11[d]	4	6	5
	B11[d]	4	4	8
	A19	4	3	8
	B19	6	3	3
	C19	8	6	6
	A21	4	4	6
	B21	3	4	10
	A23	7	2	5
	B23	4	4	3
Mean = 6.7				
7-29-77	A15[d]	4	6	5
	B15[d]	2	2	2
	C15	2	3	3
	A17	1	1	1
	B17	1	1	0
	C17	3	4	9
	A19	3	3	4
	B19	2	3	4
	C19	1	2	4
	A21[c]	5	5	4
	B21[d]	8	5	9
	A23[d]	6	5	6
	B23[d]	5	2	6
	A8	5	5	5
	B8	6	4	6
	C8	5	4	3
	A10	2	1	1
	B10	5	3	6
	C10	9	7	6
	A12	6	10	13
Mean = 4.2				
7-30-77	B2[b]	4	1	0
	C2	4	6	6
	A4	6	9	6
	B4	5	4	3
	C4[c]	7	8	6
	A6	3	5	3
	B6	5	6	5
	C6	5	3	2
	A8	2	2	1
	B8	11	2	2
	C8	8	8	7
	A10	3	1	2
Mean = 4.5				

[a]Steam aspiration turned off or plugged steam nozzle.

[b]Long charge time (exceeding the mean charge time by 30 percent or more).

[c]Misalignment of the larry car, shrouds, or drop sleeves.

[d]Interference with the observers' ability to read emissions, not used.

TABLE C-2. DATA ON VISIBLE EMISSIONS FROM CHARGING, J&L STEEL, PITTSBURGH

Battery	Date	Duration of visible emissions (seconds)
P2	12-12-78	5
		7
	12-13-78	28.8[a]
		12.2
		6.0
		6.0
		7.4
		3.8
	8-15-79	3
		0
		1.5
		9
		5
	8-16-79	3.6
		7.0
		13.6
		6.2
Mean = 7.4		
P4	8-15-79	3.6
		2
		11
		8
		5
		7
		3.4
		11
		6
		5
Mean = 6.2		

[a]Problems with door placement.

TABLE C-3. DATA ON VISIBLE EMISSIONS FROM CHARGING, U.S. STEEL, FAIRFIELD, JUNE 1979

Battery	Date	Oven no.	Duration of visible emissions (seconds)
2	6-25	47	5
		52	6
		57	13
		4	8
		14	10
		19[a]	9
		24	6
		29	7
		9[b]	21
		39	5
		44	5
	6-26	19	5
		9	11
		24[c]	36
		34[c]	49
		29	2
		39	6
		44	4
		49	5
		54[c]	50
		1[f]	246
		6	22
		11[g]	59
		16	1
	6-27	44[e]	21
		49	3
		54	3
		1	5
		6	1
		11	12
		16	2
		21	15
		26	2
		36	9
		41	1
		46	70
		51	3
		56	7
		3	59
	6-28	56[d]	120
		3	[illegible]
		[illegible]	[illegible]
		[illegible]	[illegible]
		18[e]	285
		23	42
		28	3
		33	8
		38	2
		43	1
		48	2
		53	6
		5	6
		10	24
		15	1
		20	2

Mean = 25.3

(continued)

TABLE C-3. (continued)

Battery	Date	Oven no.	Duration of visible emissions (seconds)
6	6-28	64	11
		74	4
		84	30[h]
		6	18
		16	9
		36	10
		46	8
		56	2
		66	3
		76	4
		78	6
		1	6
		11	2
		21	4
		31	34
		41	5
		51	3
		61	6
		71	6
		81	33
Mean = 10.2			

[a]Emissions during lid replacement.

[b]Nozzle may be plugged.

[c]Boot not seating properly.

[d]Suspect low steam pressure.

[e]Insufficient aspiration.

[f]No. 4 sleeve leaking.

[g]Suspect steam problems.

[h]Jumper not connected.

TABLE C-4. DATA ON VISIBLE EMISSIONS FROM CHARGING, U.S. STEEL, FAIRFIELD, BATTERY 6

Date	Oven no.	Duration of visible emissions (seconds)		
		Observer 1	Observer 2	Observer 3
7-9-74	38	18	38	15
	48	16	15	14
	58	14	11	9
	68	5	4	10
	78	4	6	--
	1	11	12	9
	11[a]	3	4	4
	21	99	87	98
	31[b]	4	7	--
	41	150	147	160
	51	15	33	23
	61	11	20	11
	71	7	12	9
	81	66	69	105
	3	20	31	8
	13	16	36	40
	23	13	11	15
	33	16	7	12
Mean = 30.4				
7-10-74	63	7	7	7
	73	7	16	8
	83	50	37	30
	5	6	3	4
	15	9	9	9
	25	3	6	6
	35	5	5	3
	45	7	5	6
	55	18	9	7
	65	8	7	8
	75[b]	5	7	8
	85	115	98	45
	7	5	--	--
	17	8	6	8
	27	8	11	12
	37	10	9	10
	47	5	4	4
	57	--	6	7
	67	--	4	7
	77	--	7	7
	9	--	6	6
	19	--	95	63
	29	--	8	10
	[illegible]		13	22
	[illegible]			[illegible]
	59	--	6	7
	69	--	3	6
	79	--	8	9
	2	--	14	14
Mean = 14.2				
9-30-75	14	4	6	4
	34	14	18	8
	44	6	7	4
	54	7	7	5
	64	3	4	2

(continued)

TABLE C-4 (continued)

Date	Oven no.	Duration of visible emissions (seconds) Observer 1	Observer 2	Observer 3
9-30-75	74	6	7	4
	6	13	24	11
	16	10	12	6
	26	19	7	6
	36	11	13	4
	46	5	5	3
	56	4	6	5
	66	7	5	6
	76	6	5	3
	8	13	13	10
Mean = 8				
11-30-76	71	37	5	7
	81	22	12	12
	23	13	5	5
	33	32	20	12
	43	33	9	8
	53	36	51	33
	63	19	11	18
	73	15	14	7
	83	28	17	22
	5	45	39	34
	15	47	--	48
	25	43	34	5
	35	100	68	71
	45	48	28	39
	55	18	23	12
Mean = 27				
12-1-76	77	2	2	3
	9	19	16	23
	19	9	10	18
	47[b]	73	42	112
	29	--	7	11
	39	10	10	16
	49	32	33	37
	59	33	26	42
	79	14	16	21
	2	8	8	10
Mean = 22.9				
12-6-76	4	12	8	10
	14	7	5	6
	24	4	5	4
	[illegible]	[illegible]	[illegible]	[illegible]
	44	15	11	15
	54	2	2	2
	64	4	5	4
	84[b]	42	42	47
	6	10	5	8
	16	14	16	16
	26	6	4	6
	36	7	4	8
	56	3	2	2
	66	6	5	6
	48[c]	3	2	4

(continued)

TABLE C-4 (continued)

Date	Oven no.	Duration of visible emissions (seconds) Observer 1	Observer 2	Observer 3
12-6-76	58[c]	4	2	4
	68	3	3	2
	78	12	12	14
	1	6	4	6
	11	2	2	3
	21	4	3	3
	31	2	2	2
	41	5	5	7
	51	3	2	4
	61	7	11	10
Mean = 7.4				
12-7-76	11	12	13	9
	21	5	7	6
	31	1	2	1
	41	16	16	13
	51	4	3	5
	61	4	4	4
	71[c]	5	7	4
	81[c]	9	6	7
	3	6	5	5
	13	7	5	21
	23	6	3	4
	33	9	8	6
	43	3	2	2
	53	4	3	2
	63	7	7	7
Mean = 6				
12-8-76	65	6	3	4
	75[b]	5	4	4
	85	9	8	7
	7	6	3	4
	27	28	25	20
	37	6	9	7
	47	8	8	7
	57	5	3	3
	67	8	4	4
	77	6	7	5
	9	31	28	19
	29	5	6	3
	39	15	14	6
	49	11	9	5
	59	8	8	6
	69	4	6	4
	79	5	5	4
	2[a]	119	22	17
	12	14	15	12
	52	25	22	14
	72	10	10	10
	82	27	16	9
	4	44	40	34
	14	20	18	12
	24	7	10	8
Mean = 12.1				

(continued)

TABLE C-4 (continued)

Date	Oven no.	Duration of visible emissions (seconds) Observer 1	Observer 2	Observer 3
12-9-76	24	31	26	35
	34	5	7	4
	54	6	4	7
	64	3	4	3
	74[b]	9	20	8
	84[b]	185	167	158
	6	15	10	11
	16	4	4	4
	26	6	5	5
	36	2	3	3
	46	13	14	8
	56	4	3	3
	66	13	20	8
	76	3	5	7
	8	2	3	4
	18	3	3	2
	28	5	4	3
	38	25	26	24
	48	4	4	3
	58	4	7	3
	68	4	5	3
	78	4	6	3
	1	5	5	3
	11	5	4	3
	31	3	7	3
	21	4	8	4

Mean = 13.6

[a]Misalignment of the larry car, shrouds, or drop sleeves.

[b]Failure to use a jumper pipe or improper seating of jumper pipe.

[c]Long charge time (exceeding the mean charge time by 30 percent or more).

TABLE C-5. DATA ON VISIBLE EMISSIONS FROM CHARGING, U.S. STEEL, FAIRFIELD, BATTERY 9, JUNE 1979

Date	Oven no.	Duration of visible emissions (seconds)	Date	Oven no.	Duration of visible emissions (seconds)
6-25	57[a]	38	6-26	2	4
	67	12		12	2
	9	4		22	2
	19[b]	12		32	4
	29	4		42	3
	39	4		52	5
	49	2		62	2
	59	6		4[d]	20
	69[c]	20		14	5
	2	3		24	4
	12	4			
	22	5	6-27	52	1
	32	3		62	2
	42	4		4	3
	52	3		14	2
				24	4
6-26	27	4		34	2
	47	2		44	1
	57	8		54[f]	10
	67	5		46	2
	37[e]	4		56	2
	9	4		66	2
	19	6		8	2
	29	2		18	1
	39	4		28[g]	8
	49	2		38	13
Mean = 5.4					

[a]Emissions from smoke box.

[b]Collector pipe emission.

[c]Last oven, jumper pipe used.

[d]Emissions from No. 2 boot during leveling.

[e]Liquor spray nozzle plugged.

[f]Emissions from No. 1 boot.

[g]Small leak on smoke box.

TABLE C-6. DATA ON VISIBLE EMISSIONS FROM CHARGING, LONE STAR STEEL, BATTERY C, OCTOBER 1979

Date	Duration of visible emissions (seconds)	Date	Duration of visible emissions (seconds)
10-23	3	10-25	10
	4		13
	10		11
	6		6
	3		9
	6		5
	11		2
	10		8
	4		9
	3		3
10-24	14		
	8		
	10		
	5		
	6		
	6		
	6		
	15		
	12		
	10		
Mean = 7.4			

TABLE C-7. DATA ON VISIBLE EMISSIONS FROM CHARGING, U.S. STEEL, GARY, BATTERY 1

Date	Oven no.	Duration of visible emissions (seconds)				
		Observer 1	Observer 2	Observer 3	Observer 4	Observer 5
6-17-76	A14	--	5	10	17	--
	B14	5	8	2	7	--
	C14	0	0	2	1	--
	A16	3	2	1	--	--
	B16	2	1	2	--	--
	C16	3	3	1	--	--
	A18	44	36	21	--	--
	B18	33	21	16	--	--
	C18	26	20	11	--	--
	A20	22	6	7	--	--
Mean = 11						
6-18-76	A26	15	12	--	--	--
	B26	29	25	--	--	--
	C26	19	9	14	--	--
	A28	15	14	20	--	--
	B28	12	9	15	--	--
	A1	18	26	38	--	--
	B1	15	11	18	--	--
	C1	15	9	11	--	--
	A3	6	4	4	--	--
	B3	2	1	0	--	--
Mean = 14						
6-28-76	C19	5	4	9	6	1
	A21	11	10	16	13	36
	B21	8	7	14	5	5
	C21	5	3	3	6	1
	A23	6	5	12	3	3
	B23	10	7	6	5	12
	C23	1	2	15	9	4
	A25	19	11	40	6	1
	B25	8	4	14	10	5
	C25	11	7	11	8	9
Mean = 8						
6-29-76	B27	9	25	13	105[a]	21
	C27	8	3	3	2	0
	A29	2	--	3	--	4
	B29	5	6	5	4	3
	A2	4	13	15	21	7
	B2	11	11	7	8	11
	C2	3	6	3	6	4
	A4	8	12	3	13	10
	B4	21	21	20	9	11
	C4	20	10	6	16	12
	A6	--	11	11	--	7
Mean = 9						
11-1-77	A14[b]	20	46	15	--	--
	B14[b]	109	60	11	--	--
	C14	19	37	19	--	--
	A16[b]	5	12	3	--	--
	B16[b]	146	30	1	--	--
	C16	0	2	0	--	--
	A18	8	16	3	--	--
Mean = 14						

(continued)

TABLE C-7. (continued)

Date	Oven no.	Duration of visible emissions (seconds) Observer 1	Observer 2	Observer 3	Observer 4	Observer 5
11-2-77	A11[b]	12	29	23	--	--
	B11	18	15	26	--	--
	C11	15	6	17	--	--
	C13[b]	17	14	18	--	--
	A15[b]	8	5	3	--	--
	B15[c]	7	6	3	--	--
	C15[c]	32	23	38	--	--
	A17[b]	14	8	14	--	--
	B17[b]	0	0	0	--	--
	C17	15	5	8	--	--
	A19	13	16	16	--	--
	B19	0	0	1	--	--
Mean = 13.5						
11-3-77	A29	25	17	21	--	--
	B29	4	3	4	--	--
	B5	3	2	1	--	--
	A2	3	4	4	--	--
	C2	2	2	2	--	--
	B25	12	6	5	--	--
	C25	7	11	8	--	--
	A27	13	5	5	--	--
	B27	6	6	7	--	--
	C27	6	8	11	--	--
	C21	3	0	0	--	--
	A23	8	6	6	--	--
	B23	3	7	10	--	--
	C23	18	7	10	--	--
	A25[b]	15	15	8	--	--
	A19[b]	14	10	12	--	--
	B19[b]	2	0	1	--	--
	C19[b]	9	8	6	--	--
	A21[b]	13	3	7	--	--
	B21[b]	21	14	13	--	--
	A8	18	11	15	--	--
	B8	17	12	12	--	--
	C8	4	2	2	--	--
	A10	19	18	17	--	--
	B10	5	5	2	--	--
Mean = 8						
11-4-77	B28	20	25	24	--	--
	A1	4	7	6	--	--
	B1[b]	5	13	7	--	--
	C1[d]	150	139	145	--	--
	A3	17	15	18	--	--
	C24	9	10	11	--	--
	A26	11	11	6	--	--
	B26	18	16	22	--	--
	C26	31	38	33	--	--
	A28	18	15	--	--	--
	B22	14	8	9	--	--
	B5	6	6	4	--	--
	C22	3	3	1	--	--
	A24	9	13	10	--	--
	B24	12	11	16	--	--

(continued)

TABLE C-7. (continued)

Date	Oven no.	Duration of visible emissions (seconds)				
		Observer 1	Observer 2	Observer 3	Observer 4	Observer 5
11-4-77	B14	15	15	--	--	--
	C14	12	9	9	--	--
	A16	3	5	3	--	--
	B16	14	18	15	--	--
	C16	9	7	4	--	--
	C10	13	12	8	--	--
	A12	15	14	10	--	--
	B12	9	11	10	--	--
	C12	11	13	9	--	--
	A14[e]	105	123	94	--	--
	A8	27	42	45	--	--
	B8[b]	22	19	18	--	--
	C8	11	10	10	--	--
	A10	10	14	11	--	--
	B10	6	2	5	--	--
	Mean = 20.2					

[a]Suspected recording error, not used.

[b]Interference with the observers' ability to read emissions, not used.

[c]Misalignment of the larry car, shrouds, or drop sleeves.

[d]Closed damper between the offtake and main.

[e]Long charge time (exceeding the mean charge time by 30 percent or more).

TABLE C-8. DATA ON VISIBLE EMISSIONS FROM CHARGING, U.S. STEEL, CLAIRTON, ALL BATTERIES (double collector main, 3 to 4.2 m)

Battery	Number of charges	Average duration of visible emissions per charge (seconds)[a]
1	124	8.4
2	124	4.6
3	124	5.7
7	124	6.4
8	112	6.9
9	124	8.3
10	124	4.2
11	124	4.5
16	124	2.6
17	124	3.6
19	124	11.6
20	150	6.4
21	120	9.6
22	52	3.5

[a]The data were collected by U.S. Steel, Clairton personnel in December 1979.

TABLE C-9. DATA ON VISIBLE EMISSIONS FROM CHARGING, U.S. STEEL, CLAIRTON, AUGUST 7-10, 1979

Battery	Oven no.	Visible emissions (seconds)	Oven no.	Visible emissions (seconds)	Oven no.	Visible emissions (seconds)
2	A27	2.2	A24	8.0	A9	14.0
	B29	9.1	B26	5.0	B11	13.7
	A29	3.5	A26	6.0	A11	10.0
	B31	3.2	B28	13.0	A13	7.2
	B6	5.7	A28	2.0	B13	5.2
	A6	17.6	B30	6.0	B9	22.8
	B8	11.8	A30	4.0	A9	9.6
	A8	13.0	A1	13.0	B11	19.5
	B10	9.2	A24	21.0	A11	21.5
	A10	4.2	B26	6.0	B13	19.8
	B12	4.0	A26	5.0	A13	15.8
	A12	9.5	B28	5.0	B15	10.8
	B14	5.0	A28	6.0	A15	8.4
	A8	2.5	B30	5.0	B17	10.0
	B10	3.0	A30	4.0	A17	11.0
	B12	11.0	C1	5.0	B19	11.7
	A12	6.5	A1	11.0	A19	10.2
	B16	8.0	B1	7.0		
	A16	2.5	B9	10.8		
Mean = 9.0						
20	A12	6.5	A14	3.5	A12	24.0[a]
	B12	8.0	B14	2.0	C14	15.5
	C12	7.0	C14	3.5	A16	11.5
	A14	13.0	B18	5.0	B16	7.0
	B14	8.5	C18	8.5	C16	10.0
	C16	6.0	A20	4.0	A18	10.0
	A18	7.5	B20	5.0	B18	8.5
	B18	3.0	C20	10.5	C18	25.0
	C18	6.0	A22	8.0	A20	120.0[b]
	A20	7.5	B22	7.0	B20	6.0
	B20	8.5	C22	6.0	C20	17.0
	C20	9.5	A24	7.5	A16	24.0[c]
	A22	6.0	B24	4.5	B16	9.5
	B22	4.5	C4	127.0[d]	C16	12.0
	C22	7.0	A6	13.0	A18	14.0
	C8	5.8	B6	4.5	B18	17.0
	A10	5.0	C6	7.0	C18	15.0
	B10	4.8	A8	5.5	A20	8.5
	C10	4.8	B8	2.0	B20	10.5
	A12	6.5	C8	6.0	C20	15.5
	B12	3.8	A10	4.0	A22	9.5
	C12	4.2	B10	4.0		
Mean = 12.0						

(continued)

TABLE C-9. (continued)

Battery	Oven no.	Visible emissions (seconds)	Oven no.	Visible emissions (seconds)	Oven no.	Visible emissions (seconds)
22	A19	4.5	C27	3.0	A18	18.0[e]
	B19	9.2	A29	8.5	B18	4.0[f]
	C19	2.6	B29	13.5	C18	13.0
	A21	5.5	C29	9.0	A20	4.0
	B21	9.3	A2	3.5	B20	4.0
	C21	9.5	B2	3.0	C20	12.0
	A23	7.0	C2	1.0	A22	9.5
	B23	8.5	A4	7.0	B22	4.5
	C27	2.5	B4	4.0	C22	2.0[g]
	A29	0.5	B6	6.0	A24	19.5
	B29	4.0	C6	5.0	B24	4.5
	C29	2.5	A8	6.5	C24	3.0
	A2	5.5	B8	3.0	A20	9.5
	B2	10.0	C8	3.5[h]	C20	7.0
	C2	2.0[i]	A10	10.0	A22	2.0
	A4	41.0	B10	5.5	B22	3.0
	B4	3.0[j]	C10	3.0	C22	11.0
	C4	0.5	A12	1.5	A24	4.0
	A6	4.0	B12	6.5	B24	6.5
	B6	2.0	C12	15.0	C24	2.0
	B27	1.0	A14	13.0		

Mean = 6.6

[a]Coal stuck in No. 3 hopper.

[b]Larry car No. 14 problem with volumetric metering of coal into hopper No. 3.

[c]Delay waiting for leveling machine.

[d]All emissions from lid No. 3 after drop sleeve was raised.

[e]Emissions from lids 1 and 4 while charging.

[f]Emissions from lid 2 while charging.

[g]Rapid charge rate, end of shift, heavy emissions out of all lids.

[h]Steam turned off too soon.

[i]Plugged liquor spray.

[j]Pushing emissions interfered for 1 to 2 minutes.

TABLE C-10. DATA ON VISIBLE EMISSIONS FROM CHARGING, U.S. STEEL, CLAIRTON, FEBRUARY 4-9, 1980

Battery	Oven no.	Visible emissions (seconds)	Oven no.	Visible emissions (seconds)	Oven no.	Visible emissions (seconds)
1	A2	2	A8	4	B20	3
	B2	2	B14	2	A22	4
	C2	82[a]	A16	8	B5	4
	A4	2	B16	2	A7	7
	B4	7	A18	9	B7	3
	A6	3	B18	12[b]	A9	2
	B6	7	A20	6		
Mean = 8.6						
3	A2	3	B6	10	A18	15
	B2	3	A8	7	B18	15
	C2	5	A14	5	A20	4
	A4	8	B14	3	B20	10
	B4	9	A16	9		
	A6	8	B16	10		
Mean = 7.8						
7	B9	8	A17	3	A27	7
	A11	7	B17	9	B27	6
	B11	11	A23	5	A29	7
	A13	8	B23	6	B29	9
	A15	12	A25	10		
	B15	7	B25	6[c]		
Mean = 7.6						
8	C1	15	B11	8	B17	8
	B3	7	A11	3	A17	5
	A3	9	B13	13	B19	16
	B5	10	A13	7	A19	3
	A5	8	B15	13		
	B7	10	A15	7		
Mean = 8.9						
9	B11	20[d]	B17	8	B25	18[e]
	A13	8	A19	3	A27	5
	B13	5	B19	10	B27	12
	A15	7	A23	6	A29	6
	B15	3	B23	8		
	A17	10	A25	6		
Mean = 8.4						
10	A25	22[f]	A31	3	B10	2
	B25	9	B31	5	A12	3
	A27	9	B6	4	B12	8
	B27	46	A8	4	B14	2
	A29	4	B8	11		
	B29	6	A10	3		
Mean = 8.8						

(continued)

TABLE C-10. (continued)

Battery	Oven no.	Visible emissions (seconds)	Oven no.	Visible emissions (seconds)	Oven no.	Visible emissions (seconds)
11	A25	13[h]	A31	8[b]	A12	8
	B25	18[h]	B31	19[b]	B12	7[h,i]
	A27	14[h]	A8	3	A14	29[j]
	B27	13[h]	B8	14	B14	11
	A29	5[h]	A10	4		
	B29	10[h]	B10	10		
Mean = 11.6						
19	A16	8[k]	A14	7	C24	7
	B16	14[k]	B14	5	A26	8
	C16	7	A16	2	B26	2
	A18	8	C22	8	C26	2
	B12	8	A24	7		
	C12	5	B24	11		
Mean = 6.8						
21	A21	15	C11	8	B25	1[m]
	B21	4	A13	6	A27	32
	C21	2	B13	8	B27	8
	A23	7	C13	14[l]	C27	1
	B23	4	C23	96	A29	6
	C23	9	A25	10	B29	4
Mean = 13.1						

[a] Poor drop sleeve alignment on No. 1 lid; heavy emissions from No. 2 and No. 3 lids during charging; bursts of emissions when chuck door opened and leveling commenced.

[b] Emissions at the start of and during leveling.

[c] Smoke from cokeside door obstructed view during first minute.

[d] Larry car drifted off holes.

[e] Damper arm fell on cokeside, lids No. 3 and No. 4 emitting.

[f] Carbon buildup blockage possible.

[g] Puffs from No. 1 lid.

[h] Emissions during leveling.

[i] Much puffing during charging.

[j] Abnormal charge: lidman failed to remove all lids before charging.

[k] Poor drop sleeve alignment.

[l] Most emissions from lids No. 3 and No 4 during No. 2 lid discharge and [illegible].

[m] Replacing collar on pusherside causing steam disruption.

TABLE C-11. DATA ON VISIBLE EMISSIONS FROM CHARGING, U.S. STEEL, CLAIRTON, AUGUST 13-15, 1979

Battery 16[a]		Battery 17[a]	
Oven no.	Visible emissions (seconds)	Oven no.	Visible emissions (seconds)
B3	1.5	B6	4
A9	0	A8	1
B9	1	B8	2
A11	1	A10	1
A23	0	A14	0
A25	0	A16	10
B11	0	B14	4
A13	0	B16	2
A11	0	A18	1
B11	0	B18	0
A13	0	A20	0
B13	0	A22	2
B19	1	A18	1
A21	0	A20	1
B21	1	A22	1
B23	0	B22	0
A19	0	A28	0
B19	0	B28	0.5
A21	0	A30	0.5
B21	2	B30	0.5
A23	0	A30	1
B23	13[b]	B30	1
A25	0	A1	0
B25	0.5	B1	0.5
A1	0.5	A3	1
B2	0	B3	0
A4	0.5	A5	0
B4	5.5	B5	0
		B11	0.5
		A13	0.5
		A15	1
		B13	0
Mean = 1.0		Mean = 1.2	

[a]"Run of the mine" (nonpulverized) coal was charged.

[b]Drop sleeves No. 1 and No. 3 not sealed.

TABLE C-12. DATA ON VISIBLE EMISSIONS FROM CHARGING, SHENANGO, INC., OCTOBER 20-22, 1980

Battery 3		Battery 4	
Oven no.	Visible emissions (seconds)	Oven no.	Visible emissions (seconds)
94	4	124	3
104	3	135	8
84	3	144	4
114	6	154	4
82	4	129	9
92	10	139	8
89	6	149	7
109	4	119	4
79	1	117	4
3	23	127	11
107	9	137	7
87	6	147	10
81	6	121	4
101	3	131	4
111	7	141	9
91	4	151	8
83	12	123	6
103	3	133	7
113	4	143	5
93	4	153	10
Mean = 6.1		Mean = 6.6	

TABLE C-13. DATA ON VISIBLE EMISSIONS FROM CHARGING, NATIONAL STEEL, WEIRTON, WEST VIRGINIA, BATTERY 1

Date	Oven no.	Visible emissions (seconds)	Oven no.	Visible emissions (seconds)	Oven no.	Visible emissions (seconds)
8-81	A-7	5.0	B-7	6.0	A-9	4.5
	A-9	8.0	B-9	8.0	A-11	7.0
	B-3	3.0	B-11	4.0	A-15	3.0
	C-3	30.0	C-11	12.0	A-17	43.0
	B-5	7.0	B-13	26.0	C-11	17.0
	C-5	12.0	B-11	8.0	B-13	15.0
	C-7	12.0	A-7	32.0	C-13	22.0
Mean = 13.5						
6-82	B-10	14.0	A-16	18.0	C-12	2.0
	C-10	7.0	B-16	2.5	C-14	4.0
	B-12	15.0	A-18	3.5	B-14	3.5
	C-12	3.0	B-18	24.0	C-14	11.0
	A-14	6.0	B-10	5.0	A-16	3.0
	B-14	11.0	C-10	16.0	B-16	5.0
	C-14	28.0	B-12	22.0		
Mean = 10.2						

TABLE C-14. DATA ON VISIBLE EMISSIONS FROM CHARGING, BETHLEHEM STEEL, BURNS HARBOR, INDIANA, BATTERY 2, MAY 19-23, 1980

Oven no.	Visible emissions (seconds)	Oven no.	Visible emissions (seconds)	Oven no.	Visible emissions (seconds)
224	26	266	8.6	222	10.5
244	2	276	11.9	208	1.5
254	1.4	286	19.2	218	1.0
264	4[a]	208	9.7	224	13.5
274	2[a]	218	12.5	238	2.0
236	43	234	3.2	248	2.0
246	35	238	4[a]	258	1.5
256	9	286	10[a]	268	3
				278	4[a]

Mean = 10.8

[a]Interference with the observer's ability to read emissions, not used.

TABLE C-15. DATA ON VISIBLE EMISSIONS FROM DOOR LEAKS, U.S. STEEL, FAIRFIELD, JUNE 1979

Battery	Date	Start time	Finish time	Percent leaking doors
2	6-25	1152	1159	12.7
	6-26	1225	1241	2.6
		1603	1611	6.1
	6-27	1118	1127	10.2
		1559	1604	8.1
	6-28	1235	1247	5.3
		1553	1607	5.6
9	6-25	1727	1733	3.5
	6-26	1128	1134	3.4
		1551	1559	2.7
	6-27	0852	0912	4.8
		1122	1129	4.8
		1436	1448	4.0

TABLE C-16. DATA ON VISIBLE EMISSIONS FROM DOOR LEAKS, KAISER STEEL, FONTANA, CALIFORNIA, MAY 1979

Date	Percent leaking doors	
	Battery F	Battery G
5-8	7.8	3.3
	5.6	2.2
5-9	3.3	7.8
	4.4	5.6
5-10	0.0	0.0
	2.2	0.0
5-11	1.1	2.2
	5.6	7.8

TABLE C-17. DATA ON VISIBLE EMISSIONS FROM DOOR LEAKS, KOPPERS, ERIE, PENNSYLVANIA, SEPTEMBER 11, 1979

Battery	Percent leaking doors
A	2
	1
	2
B	7
	0
	5

TABLE C-18. DATA ON VISIBLE EMISSIONS FROM DOOR LEAKS, NATIONAL STEEL, ZUG ISLAND, MICHIGAN, BATTERY 5, SEPTEMBER 18, 1979

Run no.	Percent leaking doors					
	Observer 1		Observer 2		Observer 3	
	CS	PS	CS	PS	CS	PS
1	61	39	38	25	34	27
2	64	55	44	52	46	62
3	39	65	33	58	47	62

CS = cokeside.
PS = pusherside.

TABLE C-19. DATA ON VISIBLE EMISSIONS FROM DOOR LEAKS, U.S. STEEL, CLAIRTON, AUGUST 1979

Battery	Date	Number of doors leaking	Percent leaking doors
1	8-7	1	0.8
		3	2.3
	8-8	1	0.8
		0	0
	8-9	2	1.6
		1	0.8
	8-10	1	0.8
	Average		1.0
2	8-7	2	1.6
		7	5.5
	8-8	0	0
		1	0.8
	8-9	5	3.9
		0	0
	8-10	5	3.9
	Average		2.2
19	8-7	6	3.4
	8-8	6	3.4
	8-9	8	4.6
		6	3.4
	8-10	8	4.6
	Average		3.9
20	8-7	5	2.9
	8-8	8	4.6
		9	5.2
	8-9	13	7.5
		11	6.3
	8-10	8	4.6
	8-13	6	3.4
	8-14	4	2.3
	8-15	6	3.4
	Average		4.5
21	8-7	5	2.9
	8-8	4	2.3
	8-9	2	1.1
		10	5 7
	8-10	5	2.9
	Average		3 0
22	8-7	5	2.9
	8-8	4	2.3
		4	2.3
	8-9	9	5.2
		6	3.4
	8-10	8	4.6
	Average		3.5

TABLE C-20. DATA ON VISIBLE EMISSIONS FROM DOOR LEAKS, U.S. STEEL, CLAIRTON, FEBRUARY 1980

Battery	Date	Number of doors leaking	Percent leaking doors
3	2-4	0	0
	2-5	1	0.8
	2-6	1	0.8
	2-7	2	1.6
	Average		0.6
7	2-4	3	2.3
	2-5	5	3.9
	2-6	7	5.5
	2-7	0	0
	Average		2.9
8	2-4	7	5.5
	2-5	8	6.3
	2-6	8	6.3
	2-7	8	6.3
	Average		6.1
9	2-4	10	7.8
	2-5	12	9.4
	2-6	5	3.9
	2-7	21	16.4
	Average		9.4
10	2-6	7	5.6
		6	4.8
	2-7	9	7.1
	Average		5.8
11	2-6	7	5.5
		9	7.0
	2-7	18	14.1
	Average		8.9
16	2-4	5	4.2
	2-5	6	5.0
	2-6	8	6.7
	2-7	5	4.2
	Average		5.0
17	2-4	4	6.6
	2-5	3	4.9
	2-6	3	4.9
	2-7	5	8.2
	Average		6.2

TABLE C-21. DATA ON VISIBLE EMISSIONS FROM DOOR LEAKS, CF&I, FEBRUARY AND MARCH 1978

Date	Percent leaking doors		
	Battery B	Battery C	Battery D
2-15	2.3	3.2	8.1
2-16	2.3	1.1	--
	1.5	--	3.2
	3.8	5.3	6.5
2-17	4.6	2.1	8.1
	6.9	5.3	8.1
2-22	7.7	2.1	4.8
2-23	7.7	1.1	6.5
	2.3	3.2	8.1
	4.6	4.3	6.5
2-24	6.9	5.3	9.7
	9.2	3.2	16.1
3-2	2.3	3.2	6.5
3-7	4.6	3.2	4.8
	2.3	1.1	1.6
3-8	6.2	4.3	6.5
	3.8	2.1	9.7
3-9	2.3	1.1	3.2
3-13	1.6	2.1	1.6
	5.4	3.2	6.5
3-15	0.8	2.1	4.9
	2.3	6.4	1.6
3-16	2.3	2.1	3.2
	5.4	4.3	6.5
3-20	2.3	6.4	6.5
	6.2	3.2	1.6
3-21	6.9	3.2	3.2
	4.6	3.2	4.8
Average	4.3	3.2	5.9

TABLE C-22. DATA ON VISIBLE EMISSIONS FROM DOOR LEAKS, NATIONAL STEEL, WEIRTON, WEST VIRGINIA, BATTERY 1, JUNE 1982

Date	Number of door area leaks	Percent leaking doors[a]
6-7-82	7	4.2
6-8-82	4	2.4
6-8-82	8	4.8
6-9-82	3	1.8
6-10-82	2	1.2

[a]For a total of 166 doors on operating ovens.

TABLE C-23. DATA ON VISIBLE EMISSIONS FROM LID LEAKS, U.S. STEEL, FAIRFIELD, JUNE 1979

Battery	Date	Start time	Finish time	Percent leaking lids
2	6-25	1210	1214	0
	6-26	0817	0820	0.5
	6-27	1100	1102	0
		1557	1600	0
	6-28	0907	0909	0
		1529	1532	0
9	6-25	1557	1559	0
	6-26	1047	1049	0
		1541	1543	0
	6-27	0835	0839	0
		1113	1116	0
		1427	1430	0

TABLE C-24. DATA ON VISIBLE EMISSIONS FROM LID LEAKS, KAISER STEEL, FONTANA, CALIFORNIA, MAY 1979

Date	Percent leaking lids	
	Battery F	Battery G
5-8	0	1.7
	0	0
5-9	0	0
	0	0
5-10	0	0
	0	0
5-11	0	0
	0	0

TABLE C-25. DATA ON VISIBLE EMISSIONS FROM LID LEAKS, J&L STEEL, PITTSBURGH

Date	Percent leaking lids	
	Battery P1	Battery P4
12-12-78	0.0	0.4
	0.6	0.0
12-13-78	0.0	0.0
	0.0	0.4
8-15-79	0.6	0.0
	0.6	0.0
8-16-79	0.6	0.0

TABLE C-26. DATA ON VISIBLE EMISSIONS FROM CHARGING PORT LID LEAKS, U.S. STEEL, FAIRFIELD, BATTERY 5

Date	Clock time	Percent leaking lids	Date	Clock time	Percent leaking lids
7-8-74	1200	0	11-30-76	852	0
	1245	0.3		952	0
	1315	0.3		1059	0
	1405	0		1311	0.3
	1457	0		1409	0.6
				1511	2.9
7-9-74	1215	0		1611	3.2
	1300	0			
	1400	0	12-2-76	804	0
	1500	0		910	0.3
				1009	0
7-10-74	708	0		1104	0
				1331	0.3
7-11-74	715	0-1.9[a]		1431	1.0
	1005	0		1517	2.6
	1015	0-0.3[a]		1622	1.3
	1115	0			
	1254	0-1.0[a]	12-3-76	833	0.3
	1335	0		934	0
	1430	0		1037	0
	1440	0		1143	0
	1550	0		1331	0.3
				1436	0
7-12-74	705	0.3-2.9[a]		1528	0.3
	835	0			
	1030	0-1.3[a]	12-4-76	747	0
	1245	0		844	0
	1458	0		948	0
				1047	0
9-30-75	930	0		1224	0.6
	1010	0		1327	0.3
	1011	0		1420	0
	1013	0			
	1023	0	12-9-76	728	0
	1125	0		827	0
	1131	0		921	1.0
				1019	1.0
10-1-75	852	0		1214	0
	853	0		1321	0
	855	0		1423	0.6
	858	0			
	859	0			
	900	0			
	1025	0			
	1027	0			
	1028	0			
	1030	0			
	1032	0			
	1033	0			
	1041	2.3			
	1334	0			
	1343	0.3			

[a]Multiple observers.

TABLE C-27. DATA ON VISIBLE EMISSIONS FROM CHARGING PORT LID LEAKS, U.S. STEEL, FAIRFIELD, BATTERY 6

Date	Clock time	Percent leaking lids	Date	Clock time	Percent leaking lids
7-9-74	707	0	12-1-76	858	0.3
	810	2.9		1109	0.3
	820	0		1334	0.3
	906	0.3		1433	0.3
	915	1.6		1528	0.3
	1030	0		1620	0.3
	1117	0		1625	0
7-10-74	705	0	12-6-76	756	0
	717	0		847	0
	855	0		937	0
	1000	0-0.3[a]		1251	0
	1030	0		1324	0
	1115	0		1432	0
9-30-75	1303	0	12-7-76	738	0
	1338	0		827	0
	1343	0		908	0
	1346	0		1105	0
	1502	0		1219	0
	1509	0		1318	0
	1717	0		1416	0
	1719	0			
	1720	0.3	12-8-76	757	0
	1726	0		853	0.6
				935	0
10-1-75	936	0		1037	0.3
	937	0		1228	0
	941	0		1321	0
	943	0.3		1426	0.6
	948	0			
	950	0	12-9-76	713	0.3
	1100	0.3		813	0
	1102	0.3		908	0
	1103	0		1009	0.6
	1108	0		1208	0
	1110	0		1309	0.6
	1112	0		1411	0.6
	1333	0			
	1341	0			

[a]Multiple observers.

TABLE C-28. DATA ON VISIBLE EMISSIONS FROM CHARGING PORT LID LEAKS, U.S. STEEL, FAIRFIELD, APRIL 1976

Battery	Date	Clock time	Percent lid leaks		
			Observer 1	Observer 2	Observer 3
5	4-21	1228	0	0	0
		1312	0	0	0
		1355	0.3	0.3	0.3
		1439	0	0	0
	4-22	0728	0.3	0	1.0
		1116	0	0	0
	4-23	0753	0	0	0
		1025	0	0	0
		1430	1.0	0	0.7
Mean = 0.1					
6	4-21	1340	0.3	0	0
		1417	0.3	0.3	0.3
		1456	0.3	0	0
	4-22	0800	0	0	0
		0937	0	0	0
	4-23	0816	0	0	0
		1047	0	0	0
		1400	0.7	0	0
		1442	--	--	1.0
Mean = 0.1					

TABLE C-29. VISIBLE EMISSIONS DATA ON TOPSIDE LEAKS FROM CHARGING PORT LIDS, U.S. STEEL, CLAIRTON

Date	Battery	Number of traverses[a]	Percent leaks observed per traverse[b]	
			Range	Average
September 1977	12A	26	0-0.6	0.1
	15	26	0-1.2	0.2
	16	25	0-1.2	0.2
	17	25	0-0.8	0.2
	19	26	0-1.1	0.3
	21	26	0-1.5	0.3
	22	26	0-1.1	0.5
October 1977	12A	26	0-0.6	0.1
	15	29	0-0.8	0.2
	16	29	0-0.8	0.1
	17	28	0-0.8	0.1
	19	29	0-1.1	0.2
	21	28	0-0.9	0.2
	22	28	0-1.1	0.3
November 1977	12A	21	0-0.6	0.1
	15	26	0-1.2	0.1
	16	26	0-1.2	0.1
	17	26	0-0.8	0.1
	19	23	0-0.6	0.1
	21	24	0-0.6	0.2
	22	25	0-0.6	0.1
December 1977	12A	14	0-0.9	0.1
	15	25	0-0.4	0.0
	16	26	0-0.8	0.1
	17	25	0-0.4	0.1
	19	22	0-0.9	0.1
	21	26	0-1.2	0.3
	22	27	0-0.9	0.2
January 1978	12A	25	0-3.0	0.3
	15	14	0-1.2	0.2
	16	20	0-1.2	0.3
	17	20	0-2.0	0.4
	19	20	0-2.6	0.4
	21	22	0-3.5	0.9
	22	21	0-2.3	0.7
February 1978	12A	16	0-1.8	0.7
	15	27	0-2.9	0.8
	16	27	0-1.2	0.3
	17	27	0-3.3	0.5
	19	27	0-1.7	0.3
	21	27	0-3.2	0.6
	22	27	0-0.9	0.3

[a]A traverse is one recording of leaks from an entire battery.

[b]Percentage of total potential leaks.

TABLE C-30. DATA ON VISIBLE EMISSIONS FROM LID LEAKS, U.S. STEEL, CLAIRTON, AUGUST 1979

Battery	Date	Number of leaking lids	Percent leaking lids
1	8-7	0	0
		0	0
	8-8	1	0.4
		1	0.4
	8-9	0	0
	Average		0.2
2	8-7	0	0
		5	2.0
	8-8	0	0
		0	0
	8-9	0	0
	Average		0.4
3	8-7	0	0
		5	2.0
	8-8	1	0.4
		0	0
	8-9	0	0
	Average		0.5
7	8-7	3	1.2
	8-8	6	2.3
	8-9	3	1.2
	Average		1.6
8	8-7	0	0
	8-8	0	0
	8-9	1	0.4
	Average		0.1
9	8-7	2	0.8
	8-8	3	1.2
	8-9	1	0.4
	Average		0.8
10	8-7	1	0.4
	8-8	3	1.2
	8-9	1	0.4
	Average		0.7
11	8-7	0	0
	8-8	0	0
	8-9	0	0
	Average		0
12	8-7	0	0
	8-8	0	0
	8-9	0	0
	Average		0
16	8-7	0	0
	8-8	0	0
	8-9	0	0
	8-13	0	0
		1	0.4
	8-14	0	0
		0	0
	8-15	0	0
	Average		0.1

(continued)

TABLE C-30 (continued)

Battery	Date	Number of leaking lids	Percent leaking lids
17	8-7	0	0
	8-8	0	0
	8-9	0	0
	8-13	1	0.4
		0	0
	8-14	0	0
	8-15	2	0.8
	Average		0.2
19	8-7	2	0.6
	8-8	7	2.0
	8-9	12	3.4
	8-13	0	0
	8-14	4	1.1
	8-15	0	0
	Average		1.2
20	8-7	3	0.9
	8-8	6	1.7
	8-9	5	1.4
		6	1.7
	8-13	1	0.3
	8-14	0	0
	8-15	1	0.3
	Average		0.9
21	8-7	1	0.3
	8-8	0	0
	8-9	3	0.9
	8-13	3	0.9
	8-14	2	0.6
	8-15	0	0
	Average		0.5
22	8-7	2	0.6
	8-8	6	1.7
	8-9	0	0
		1	0.3
	8-13	4	1.1
	8-14	6	1.7
	8-15	2	0.6
	Average		0.9

TABLE C-31. DATA ON VISIBLE EMISSIONS FROM LID LEAKS, U.S. STEEL, CLAIRTON, FEBRUARY 1980

Battery	Date	Number of leaking lids	Percent leaking lids
1	2-4	1	0.4
	2-5	1	0.4
	2-6	0	0
	2-7	0	0
	Average		0.2
2	2-4	3	1.2
	2-5	0	0
	2-6	0	0
	2-7	0	0
	Average		0.3
3	2-4	8	3.1
	2-5	3	1.2
	2-6	1	0.4
	2-7	1	0.4
	Average		1.3
7	2-4	0	0
	2-5	0	0
	2-6	2	0.8
	2-7	2	0.8
	Average		0.4
8	2-4	0	0
	2-5	0	0
	2-6	2	0.8
	2-7	1	0.4
	Average		0.3
9	2-4	0	0
	2-5	1	0.4
	2-6	1	0.4
	2-7	2	0.8
	Average		0.4
10	2-6	0	0
		0	0
	2-7	0	0
	Average		0
11	2-6	1	0.4
		0	0
	2-7	1	0.4
	Average		0.3

(continued)

TABLE C-31 (continued)

Battery	Date	Number of leaking lids	Percent leaking lids
16	2-5	1	0.4
	2-6	0	0
	2-7	0	0
	Average		0.1
17	2-5	0	0
	2-6	1	0.4
	2-7	0	0
	Average		0.1
19	2-4	2	0.6
	2-5	0	0
	2-6	3	0.9
	2-7	0	0
		2	0.6
	Average		0.4
20	2-4	3	0.9
	2-5	5	1.4
	2-6	0	0
	2-7	1	0.3
		2	0.6
	Average		0.6
21	2-4	2	0.6
	2-5	1	0.3
	2-6	0	0
	2-7	2	0.6
	Average		0.4
22	2-4	3	0.9
	2-5	1	0.3
	2-6	0	0
		0	0
	2-7	0	0
	Average		0.2

TABLE C-32. DATA ON VISIBLE EMISSIONS FROM LID LEAKS, SHENANGO, INC., OCTOBER 1980

Battery	Date	Number of leaking lids	Percent leaking lids
3	10-20	0	0
	10-21	0	0
		0	0
	10-22	0	0
		0	0
	Average		0
4	10-20	0	0
	10-21	0	0
		0	0
	10-22	0	0
		0	0
	Average		0

TABLE C-33. DATA ON VISIBLE EMISSIONS FROM OFFTAKE LEAKS, U.S. STEEL, FAIRFIELD, JUNE 1979

Battery	Date	Start time	Finish time	Percent leaking offtakes
2	6-25	1216	1223	10.0
	6-26	0850	0854	15.9
	6-27	1116	1118	2.7
		1557	1600	1.8
	6-28	0912	0915	0.9
		1539	1544	14.3
9	6-25	1601	1606	0
	6-26	1052	1054	0
		1544	1546	0
	6-27	0838	0841	1.7
		1117	1120	0
		1431	1434	0

TABLE C-34. DATA ON VISIBLE EMISSIONS FROM OFFTAKE LEAKS, J&L, PITTSBURGH, BATTERY P4

Date	Percent leaking offtakes
12-12-78	0.0
	5.1
12-13-78	1.3
	0.0
8-15-79	2.5
	0.0
8-16-79	0.0

TABLE C-35. VISIBLE EMISSION DATA ON OFFTAKE LEAKS - KAISER STEEL, FONTANA, CALIFORNIA

Luting[a] manpower	Date	Percent leaks													
		Battery A		Battery B		Battery C		Battery D		Battery E		Battery F		Battery G	
		Avg.	Percent of readings at 5 or less	Avg.	Percent of readings at 5 or less	Avg.	Percent of readings at 5 or less	Avg	Percent of readings at 5 or less	Avg.	Percent of readings at 5 or less	Avg.	Percent of readings at 5 or less	Avg	Percent of readings at 5 or less
1	April 1977	6.1	36	5.1	53	12.0	16	4 7	58	5.3	40	4.9	56	7 1	22
	May 1977	4.3	69	4.0	69	11.4	14	4.4	62	5.6	42	5.3	56	7 5	23
	June 1977	4 4	57	3.8	74	8.9	29	3.0	88	2.7	86	7.0	28	8 2	21
	April - June 1977	4 9	54	4.3	65	10.8	20	4.0	69	4.5	56	5.7	47	7 5	22
2	July 1977	2.7	78	2.9	76	4.7	56	1.8	96	1.9	95	4.3	58	3 5	73
	August 1977	2.2	91	2.1	86	3.8	72	2.2	90	2.0	95	3.4	76	3 4	81
	September 1977	2 0	91	1.2	100	4.1	68	1.9	97	1.6	97	2.8	87	2 4	87
	October 1977	2 9	82	2.1	96	5.3	54	1.8	93	2.0	89	2.7	86	5 1	46
	November 1977	3.4	71	4.2	57	5.8	43	1.8	100	2.6	86	3.8	79	4 3	64
	December 1977	4 1	57	4.4	57	4.3	57	2.3	86	2.2	100	4.8	43	3 4	86
	July - December 1977	2.9	78	2.8	79	4.7	58	2.0	94	2.1	94	3.6	72	3 5	73

[a]Approximate employees per shift per battery responsible for luting and tending lids.

TABLE C-36. DATA ON VISIBLE EMISSIONS FROM OFFTAKE LEAKS, U.S. STEEL, CLAIRTON

Battery	Date	Number of leaking offtakes	Percent leaking offtakes
1	8-7-79	4	3.1
		1	0.8
	8-8-79	1	0.8
		0	0
	8-9-79	0	0
		0	0
		0	0
	Average		0.7
2	8-7-79	0	0
		3	2.3
	8-8-79	0	0
		0	0
	8-9-79	2	1.6
		2	1.6
	8-10-79	0	0
	Average		0.8
3	8-7-79	1	0.8
		2	1.6
	8-8-79	0	0
		1	0.8
	8-9-79	0	0
		3	2.3
	8-10-79	1	0.8
	Average		0.9
16	8-7-79	0	0
	8-13-79	0	0
		2	1.6
	8-14-79	3	2.5
		0	0
	8-15-79	0	0
		1	0.8
	Average		0.7
17	8-7-79	1	0.8
	8-13-79	1	0.8
		1	0.8
	8-14-79	2	1.6
		4	3.3
	8-15-79	4	3.3
		1	0.8
	Average		1.6

(continued)

TABLE C-36 (continued)

Battery	Date	Number of leaking offtakes	Percent leaking offtakes
7	2-4-80	1	0.8
	2-5-80	1	0.8
	2-6-80	3	2.3
	2-7-80	2	1.6
	Average		1.4
8	2-4-80	2	1.6
	2-5-80	4	3.1
	2-6-80	0	0
	2-7-80	2	1.6
	Average		1.6
9	2-4-80	2	1.6
	2-5-80	5	3.9
	2-6-80	1	0.8
	2-7-80	3	2.3
	Average		2.2
10	2-6-80	0	0
		1	0.8
	2-7-80	1	0.8
	Average		0.5
11	2-6-80	8	6.3
		4	3.1
	2-7-80	0	0
	Average		3.1
19	9-16-81	3	1.8
	9-16-81	2	0.6
	9-17-81	0	0.0
	9-17-81	5	3.1
	9-18-81	3	1.8
	Average		1.5
20	9-16-81	1	0.6
	9-16-81	3	1.9
	9-17-81	3	1.8
	9-17-81	1	0.6
	9-18-81	3	1.9
	Average		1.4
21	9-16-81	7	4.4
	9-16-81	2	1.3
	9-17-81	1	0.6
	9-17-81	0	0.0
	9-18-81	14	8.5
	Average		3.0

(continued)

TABLE C-36 (continued)

Battery	Date	Number of leaking offtakes	Percent leaking offtakes
22	9-16-81	6	4.3
	9-16-81	2	1.2
	9-17-81	3	2.5
	9-17-81	1	0.6
	9-18-81	14	9.0
	Average		3.5

TABLE C-37. DATA ON VISIBLE EMISSIONS FROM OFFTAKE LEAKS, SHENANGO, INC., OCTOBER 1980

Battery	Date	Number of leaking offtakes	Percent leaking offtakes
3	10-20	3	4.3
	10-21	2	2.9
		2	2.9
	10-22	0	0
		0	0
	Average		2.0
4	10-20	0	0
	10-21	2	2.9
		0	0
	10-22	1	1.4
		2	2.9
	Average		1.4

TABLE C-38. BENZENE SOLUBLE ORGANIC CONCENTRATIONS AND EMISSION RATES FROM TESTS AT ARMCO, INCORPORATED, HOUSTON, TEXAS[1]

Sample location	Sample number	Date (1979)	Stack gas parameters		Concentration		Emission rate	
			Flow rate (ft^3/min)[a]	Temperature (° F)	g/ft^3	mg/m^3	lb/hr	kg/hr
Inlet	1	10-4	176,000	95.0	0.010	22.8	15.0	6.83
	2	10-5	174,000	105.0	0.017	37.8	24.6	11.2
	3	10-5	172,000	109.0	0.020	45.0	28.9	13.1
	Average		174,000	103.0	0.016	35.2	22.8	10.4
Outlet	1	10-4	153,000	79.6	0.007	16.0	9.18	4.16
	2	10-5	149,000	77.3	0.011	25.4	14.1	6.41
	3	10-5	148,000	66.9	0.011	24.9	13.8	6.27
	Average		150,000	74.6	0.010	22.1	12.4	5.61

[a]Dry standard measurement.

TABLE C-39. BaP EMISSION RATES FROM TESTS AT ARMCO, INCORPORATED, HOUSTON, TEXAS[2]

Sample location	Sample number	Date (1979)	Concentration		Emission rate	
			lb/ft^3[a]	mg/m^3[a]	lb/hr	kg/hr
Inlet	1	10-4	$5.7\ (10^{-9})$	0.092	0.056	0.026
	2	10-5	$6.5\ (10^{-9})$	0.103	0.070	0.032
	3	10-5	$5.2\ (10^{-9})$	0.084	0.056	0.025
Outlet	1	10-4	$3.6\ (10^{-9})$	0.057	0.036	0.016
	2	10-5	$1.2\ (10^{-8})$	0.191	0.117	0.053
	3	10-5	$1.8\ (10^{-8})$	0.294	0.174	0.079

[a]Dry standard measurement.

TABLE C-40. BENZENE CONCENTRATIONS AND EMISSION RATES FROM TESTS AT ARMCO, INCORPORATED, HOUSTON, TEXAS[1]

Sample location	Sample number	Concentration (ppm)	Emission rate	
			lb/hr	kg/hr
Inlet	1	0.7	1.6	0.71
	2	2.1	4.4	2.0
	3	2.2	4.6	2.1
	Average	1.7	3.5	1.6
Outlet	1	0.7	1.4	0.63
	2	2.9[a]	5.3	2.4
	3	2.1	3.7	1.7
	Average	2.0	3.5	1.6

[a]This result was determined from a small air sample, possible leaky bag.

TABLE C-41. SUMMARY OF DOOR LEAK OBSERVATIONS AT ARMCO, INCORPORATED, HOUSTON, TEXAS[1]

Sample number	Observer	Total[a] number of leaking doors	Total emission rate for entire battery	Coke oven door emission rate (percent of total doors) by run number									
				1		2		3		4		Average	
				PS	CS	PS	CS	PS	CS	PS	CS	PS	CS
	1	46	12	9.7	16	11	--	9.7	--	8.1	19	13	18
BSO test no. 1	2	28	9.0	8.1	--	9.7	15	9.7	--	3.2	--	7.7	NA
	3	28	9.0	6.5	--	6.5	--	11	11	9.7	--	8.4	NA
Average		34	10	8.1	NA	9.1	NA	10	NA	7.0	NA	9.7	NA
	1	68	22	18	--	25	--	16	31	23	--	20	NA
BSO test no. 2	2	81	22	16	29	19	--	19	--	16	31	18	30
	3	67	22	18	--	24	32	18	--	16	--	19	NA
Average		72	22	17	NA	22	NA	18	NA	18	NA	19	NA
	1	51	21	15	--	13	45	9.7	--	--[b]		13	NA
BSO test no. 3	2	35	14	9.7	--	13	--	6.5	27	--[b]		9.7	NA
	3	51	21	15	42	13	--	13	--	--[b]		14	NA
Average		46	19	13	NA	13	NA	9.7	NA	--b		12	NA

PS = pusherside.
CS = cokeside.
NA = not applicable.

[a]These numbers are the combined number of leaking doors from all the runs per observer.

[b]Because of darkness, Run 4 was not conducted.

APPENDIX D

EMISSION MEASUREMENT AND CONTINUOUS MONITORING

APPENDIX D - EMISSION MEASUREMENT AND CONTINUOUS MONITORING

D.1 EMISSION MEASUREMENT METHODS

The measurement of emissions resulting from coke oven charging operations, topside leaks, and door leaks presents a unique problem, due to the unconfined nature of the emissions. Neither mass measurement techniques nor conventional techniques that measure only the maximum or average opacity are considered suitable as a means of quantifying the emissions for the purpose of establishing or enforcing a numerical emission standard. Therefore, beginning in 1973, a new measurement technique based upon determination of the total duration of visual emissions (for charging) or the percentage of potential sources with visual emissions (for topside leaks and door leaks) was developed and tried by the Environmental Protection Agency (EPA) and State and local agencies.

Initial tests indicated that the method was repeatable and could be used as a means for quantifying coke oven emissions. Therefore, the method--"Determination of Visible Emissions from Coke Oven Batteries"--was used to obtain data for the development of an emission standard. The method is divided into three main parts: Procedure for Determining Visible Emissions from the Charging System During Charging, Procedure for Determining Visible Emissions from Coke Oven Doors, and Procedure for Determining Visible Emissions from Topside Ports and Offtake Systems. All tests made by EPA to obtain data adhered to the basic procedures of this method. The method and emission tests are discussed in more detail in the following paragraphs.

D.1.1 Charging Operation

Part 3 of the Reference Method was developed to measure emissions from larry car systems charging wet coal. A discussion of the rationale behind the development of the Reference Method follows. Visible emissions from larry car charging operations are not emitted from a single source or point but from the drop sleeve area around each topside port, the top of the hoppers on the larry car, and the offtakes. The emissions can be steady but are usually intermittent or pulsating during good charges. These intermittent emissions result from momentary buildups of pressure which occur as coal is charged to and leveled in the coke oven. Except for these pressure surges, the oven is under a slight vacuum during the charge. Due to the nature of the operation, procedures for directly measuring the mass of particulate and gaseous emissions were not considered feasible. The approach of assigning an actual opacity value to the emissions according to the procedures of Method 9 is potentially applicable and was considered; however, due to the intermittent emissions which characterize coke oven charging operations, this technique is not necessary to provide the quantitative measure of control system effectiveness desired for a standard of performance. The technique selected involves recording the total time that emissions are visible during a complete charge. The charging period encompasses the period of time commencing when coal begins flowing into the oven and ending when the last topside port lid is replaced. Analysis of data gathered by EPA demonstrates that this parameter, total emissions duration, is a representative measure of control effectiveness. Other techniques, such as recording the duration of emissions over a specified opacity value or only recording emissions greater than 1 meter in plume length, were

considered. The potential advantage of these techniques is that a distinction could be made between small and large quantitites of emissions that are emitted in the same length of time. Each of these techniques proved unsatisfactory or unnecessary for this source. The relationship between the opacity of the emission and the quantity of the emission is poor. Determining the size or length of the emissions proved difficult due to the quickness with which emissions momentarily explode from the ovens. Since it is not necessary to make these distinctions in order to measure control effectiveness, and since not having to determine opacities or plume length simplifies the measurement technique, total emission duration was chosen as the parameter to measure effectiveness of control.

In regard to the procedures of the Reference Method, two areas are worth noting. First, during the larry car charging operation it is sometimes standard operating procedure to reopen topside ports immediately after charging (but prior to wet sealing of topside port lids) in order to sweep spilled coal into the oven. During the EPA study, the emissions during this period were not monitored. Therefore, as defined in the Reference Method, the charging period for larry car systems does <u>not</u> include the period of time during which lids are reopened for the purpose of sweeping spilled coal into the oven. The charging period ends when the last topside port lid is put into place immediately after the coal charging is completed. Secondly, during the EPA study, the observers also recorded the elapsed time required for each oven to be charged; this information was desired for the EPA study. However, this information is not necessary to determine compliance during a performance test; therefore, it is deleted in order to simplify the test procedure.

D.1.2 Topside Leaks (Offtakes and stationary jumper pipes, topside ports, and collecting mains)

Because of the numerous potential topside leaks on a battery, it would be nearly impossible to assign opacities to or record the duration of every emission. Therefore, the technique selected is to count the sources of visible emissions. This technique is relatively simple; the primary difficulty is in defining a "leak." Leaks from offtakes, topside ports, or collecting mains can emit emissions of a large quantity or can emit only a "wisp" of visible emissions (much like a smoking cigarette). Furthermore, since pressure in any specific portion of an oven or battery will vary, the leaks can be intermittent. With these considerations in mind, the technique used involves a quick inspection (approximately 10 minutes per run) of all the ovens on a single battery at one time. During this inspection, the observer notes and records the number of offtake systems or stationary jumper pipes and the number of topside ports with any visible emission (except for steam); the observer also notes and records all visible emissions (except for steam) from the collecting main(s). As already stated, the magnitude of the topside leaks can vary tremendously. During the EPA study, the question arose as to whether or not very small leaks ("wisps") were "significant" emission sources. Obviously there was a problem with defining "significant." Nonetheless, for several tests during the EPA study the observers were instructed to differentiate between "total" and "significant" leaks. The first criterion used for determining whether or not a leak was "significant" was plume color. Brown/yellow leaks were considered "significant", while white/gray leaks were not considered "significant." This procedure was deemed totally unacceptable because there did

not appear to be any correlation between plume color and the quantity of emissions. The second criterion examined for determining whether or not a leak was "significant" was plume length. Any visible emission (other than steam) was recorded in order to determine the "total" leaks; any visible emission (other than steam) with a visible plume length of more than 1 meter was recorded in order to determine "significant" leaks. Although this criterion and test procedure appeared to be feasible, the test procedure ultimately chosen for the Reference Method makes no distinction between "significant" and "total" leaks. It requires only that all visible emissions (except steam) be recorded. This test procedure was chosen for two reasons. First, a test method based on measuring total leaks is preferred because use of this procedure is less complicated. Secondly, measuring all visible leaks provides the best indicator of the degree of emission control. Note that for the most part, the emission data collected during the tests conducted for "total" and "significant" leaks are still valid since the procedures used for determining "total" leaks during these tests were the same as the procedures required in the Reference Method.

During the EPA study, the question was raised as to what effect sun angle has on observers' readings. At one facility, it was noted that in the early morning when the sun was low in the sky and behind the offtakes (i.e., the offtakes were between the observer and the sun) the readings were higher than in the afternoon hours with the sun at the observer's back. However, this difference cannot be solely attributed to the effect of sun position. Some of this variation is attributed to the difference in luting procedures between shifts, including the difference attributable to reduced visibility during the night shift (reduced visibility at night would make it more difficult to determine leaks requiring luting). Some of

this variation is also attributed to the observer location during the inspection (catwalk rather than topside). Although some of the difference in emission levels is undoubtedly due to sunlight effects, the Reference Method does not restrict the observer's position relative to the sun. The rationale supporting this approach is that data supporting the proposed standard were collected under all conditions of observer position relative to the sun.

D.1.3 Door Leaks (Oven and chuck doors)

During the coking cycle, leaks in the seal between the oven door and oven frame (door jamb), as well as leaks in the seal between the chuck door and chuck door frame, can cause emissions to occur. In addition, emissions may occur from cracks in the refractory around the door jamb or buckstay. Due to varying pressure within the coke oven, a leak from any one oven door can intermittently occur, stopping and starting at any time during the full coking cycle. Each oven door on the battery can be a potential emission source. Due to the large number and variability of potential leaks, it would be nearly impossible to identify the occurrence and duration of all door area leaks on a battery at any given time and this is not the intent of this method. Instead, the method involves a successive inspection of all the oven door areas on a single battery. To perform the inspection, the observer chooses to first inspect either the pusher side or coke side of the battery. The observer takes a position on the ground at one end of the chosen side of the battery and then walks along the ground to the other end of the coke battery looking at all the oven door areas and noting the door areas that have visible emissions. The door area for a given oven is defined as the vertical face of the coke oven between the bench and top of the battery and between two adjacent buckstays. The inspection is completed

by observing the door areas on the other (coke or pusher) side of the battery. During the inspection, the number of each oven with a leaking door area is recorded; an emission rate, percent door areas leaking, is calculated based on the number of potential sources.

During EPA studies of door emissions, opacity readings were also taken in addition to the counting of door area leaks. The approach of assigning an actual opacity value to door emissions according to procedures similar to Method 9 were considered for performance tests. However, opacity readings would unnecessarily complicate the test method and require certified observers, while the recommended technique of determining the percentage of leaks provides an adequate quantitative measure for the demonstration of an emission standard.

D.2 MONITORING SYSTEMS AND DEVICES

Due to their unconfined nature, the emissions from oven charging, topside leaks, and door area leaks are not suited to measurement by continuous emission monitoring systems.

D.3 PERFORMANCE TEST METHOD

Available data show Reference Method 109, "Determination of Visible Emissions from Coke Oven Batteries," used by EPA during the emission measurement program to be applicable to the performance testing. Since the majority of the tests conducted by EPA involved multiple observers recording emissions simultaneously, these data provide a source of information on the repeatability of this method. Examination of the data indicates that the variance caused by observer imprecision or bias between different observers is small especially when compared to the variance caused by the process, i.e., the variation between charges or number of leaks. Therefore,

observer error (differences between observers as well as imprecision of a given observer) is not a significant problem inherent in the application of the Reference Test Method.

While conducting a performance test for charging, 15-20 charges could be observed in a 1-day period; this includes the time required on the first day of testing for the observer to become familiar with the particular facility being tested. No special test equipment is necessary, and data reduction is extremely simple. However, special safety precautions are required because coke oven emissions are suspected carcinogens. The precautions required can be found in the OSHA regulations pertaining to exposure to coke oven workers (Federal Register, Vol. 41, No. 206, Part III, Friday, October 22, 1976). The cost of conducting an emission test is estimated at $500.00 to $1,000.00 per day (15-20 charges per day). This cost estimate is based on participation of two persons per day, one person to monitor and record process information and one person to determine emissions.

The cost of a single emission test for topside leaks or door leaks is estimated to be $500.00 to $1,000.00. This cost estimate is based on a single observer performing one run each for offtakes, topside ports, and collecting main emissions or a single observer performing one run each on oven door areas. A second person would monitor and record process operating information. In reality, the emission tests for topside leaks, door leaks, and charging could be performed by the same person(s) in a single trip. Hence, all emission tests could be performed for a cost of $500 to $1,000 per day. The same safety and exposure precautions briefly mentioned for observing charging emissions also apply to performing emission tests for topside and door area leaks.

A new approach by the iron and steel industry for control of pushing emissions directly affects the determination of by-product battery door area leaks. Large enclosures, usually called sheds, have been installed on the coke side of several batteries which extend for the entire length of the battery and beyond the outside track for the pusher car. The design of these sheds requires that they be as fully enclosed as possible in order to obtain maximum capture efficiency for pushing emissions. Typically, this results in minimal clearances for operation of the pusher car and access for maintenance. It is extremely difficult for an observer to traverse for door area leaks under shed primarily because of severe safety hazards due to movement of the pusher car. In addition, low light levels and visual obstructions from ground level under the shed do not permit suitable observations for door leaks as specified in Method 109.

The problem presented by shed installations was investigated by survey door leak observation tests and two method development tests at three different by-product coke plants.[1] [2] [3] [4] The survey trips were made to try conducting door leak observations from the bench under the coke side sheds. Light level readings were made from the bench which indicated that sufficient illumination is provided to permit bench level door leak inspections. There are more stringent safety considerations involved with making observations from the bench so that persons assigned this duty must familiarize themselves with any special safety rules in effect as required by company or Occupational Safety and Health Administration regulations. A principle finding of the survey tests was a definite positive bias introduced by observing for door area leaks from the bench. Two method development tests were conducted at two separate by-product plants to characterize and quantify

this positive bias. The plants selected for method development tests were chosen by process and operational performance similarity. Controlled experimental observation door area leak traverses were made on both push and coke sides at five different batteries at the two plants. These Method 109 tests were done with two pairs of experienced observers making simultaneous traverses from the bench and from the yard. Observation rotations were used to minimize any statistical influence of individual observer bias or observer location. The method development tests confirmed a significant positive bias due to application of Method 109 from bench level. Evaluation of the data from these tests provided a means of adjusting bench observed leaks to a level reasonably equivalent to leak frequencies expected from the standard ground level (yard) traverse specified in the method.

It is recommended that observations for door area leaks be made from the bench at by-product coke batteries equipped with sheds for pushing emissions control. The number of leaks observed during the bench traverse can be corrected to a "yard traverse equivalence" using the following equation.

$$E_y = L_b - 0.07N$$

where:

E_y = Equivalent yard leaks.

L_b = Number of leaks observed from bench.

N = Number of ovens in battery.

The number of ovens per battery is included to provide a proportionality related to battery capacity. Calculations of battery door area leak performance for coke side shed installations is acheived by combining the number of "equivalent yard leaks" on the coke side with the observed number of push side leaks to determine the total number of leaks for the battery.

D.4 REFERENCES

1. The EPA Report. U.S. Steel, Clairton, PA. October 1980. Prepared by PEDCo Environmental under EPA Contract No. 68-02-3546, Task No. 5.

2. The EPA Report. Carondelet Coke, St. Louis, MO. November 1980. Prepared by PEDCo Environmental under EPA Contract No. 68-02-3546. Task No. 5.

3. The EPA Report. Method Development 1. U.S. Steel, Clairton, PA. August 1981. Prepared by PEDCo Environmental under EPA Contract No. 68-02-3546, Task No. 5.

4. The EPA Report. Method Development 2. U.S. Steel, Provo, UT. September 1981. Prepared by PEDCo Environmental under EPA Contract No. 68-02-3546, Task No. 5.

APPENDIX E

COKE OVEN EMISSIONS RISK ASSESSMENT FOR WET-COAL CHARGED COKE OVEN BATTERIES

COKE OVEN EMISSIONS RISK ASSESSMENT FOR WET-COAL CHARGED COKE OVEN BATTERIES

E.1 INTRODUCTION

E.1.1 Overview

The quantitative expressions of public cancer risks presented in this appendix are based on (1) a dose-response model that numerically relates the degree of exposure to airborne coke oven emissions (expressed as benzene soluble organics (BSO)) to the risk of getting respiratory cancer, and (2) numerica expressions of public exposure to ambient air concentrations of BSO estimated to be caused by emissions from stationary sources. Each of these factors is discussed briefly below and details are provided in the following sections of this appendix.

E.1.2 Relationship of Exposure to Cancer Risk

The relationship of exposure to the risk of contracting respiratory cancer is derived from epidemiological studies in occupational settings rather than from studies of excess cancer incidence among the public. The epidemiological methods that have successfully revealed associations between occupational exposure and cancer for substances such as asbestos, benzene, vinyl chloride, and ionizing radiation, as well as for BSO, are not readily applied to the public sector, with its increased number of confounding variables, much more diverse and mobile exposed population, lack of consolidated medical records, and almost total absence of historical exposure data. Given such uncertainties, EPA considers it improbable that any association, short of very large increases in cancer, can be verified in the general population with any reasonable certainty by an epidemiological study. Furthermore, as noted by the National Academy of Sciences (NAS)[1], "...when there is exposure to a material, we are not starting at an origin of zero cancers. Nor are we starting at an origin of zero carcinogenic agents in our environment. Thus, it is likely that any carcinogenic agent added to the environment will act by a particular mechanism on a particular cell population that is already being acted on by the same mechanism to induce cancers." In discussing experimental dose-response curves, the NAS observed that most information

on carcinogenesis is derived from studies of ionizing radiation with experimental animals and with humans which indicate a linear non-threshold dose-response relationship at low doses. They added that although some evidence exists for thresholds in some animal tissues, by and large, thresholds have not been established for most tissues. NAS concluded that establishing such low-dose thresholds "...would require massive, expensive, and impractical experiments..." and recognized that the U.S. population "...is a large, diverse, and genetically heterogeneous group exposed to a large variety of toxic agents." This fact, coupled with the known genetic variability to carcinogenesis and the predisposition of some individuals to some form of cancer, makes it extremely difficult, if not impossible, to identify a threshold.

For these reasons, EPA has taken the position, shared by other Federal regulatory agencies, that in the absence of sound scientific evidence to the contrary, carcinogens should be considered to pose some cancer risk at any exposure level. This non-threshold presumption is based on the view that as little as one molecule of a carcinogenic substance may be sufficient to transform a normal cell into a cancer cell. Evidence is available from both the human and animal health literature that cancers may arise from a single transformed cell. Mutation research with ionizing radiation in cell cultures indicates that such a transformation can occur as the result of interaction with as little as a single cluster of ion pairs. In reviewing the available data regarding carcinogenicity, EPA found no compelling scientific reason to abandon the no-threshold presumption for BSO.

In developing the exposure-risk relationship for BSO, EPA has assumed that a linear no-threshold relationship exists at and below the levels of exposure reported in the epidemiological studies of occupational exposure. This means that given the non-threshold presumption, the estimates of cancer risk to the general population can be derived from the occupational studies even though exposures in the latter were much higher. The EPA believes that this assumption is reasonable for public health protection in light of presently available information. Assuming that exposure has been accurately quantified, it is the Agency's belief that the exposure-risk relationship used by EPA at low concentrations represents a plausible upper-limit risk

estimate in the sense that the risk is probably not higher than the calculated level and could be much lower.

The numerical constant that defines the exposure-risk relationship used by EPA in its analysis of carcinogens is called the unit risk estimate. The unit risk estimate for an air pollutant is defined as the lifetime cancer risk occurring in a hypothetical population in which all individuals are exposed throughout their lifetimes (about 70 years) to an average concentration of 1 $\mu g/m^3$ of the agent in the air which they breathe. Unit risk estimates are used for two purposes: (1) to compare the carcinogenic potency of several agents with each other, and (2) to give a crude indication of the public health risk which might be associated with estimated air exposure to these agents.

The unit risk estimate for BSO that is used in this appendix was based on the risk of respiratory cancer only. Although other tumor sites are associated with BSO emissions, data are insufficient to derive unit risk factors. The methodology used to derive the respiratory cancer risk factor is described in E.2 below.

E.1.3 Public Exposure

The unit risk estimate is one of several factors necessary to derive quantitative expressions of public health risks. Another factor needed is a measure of the extent of human exposure, i.e., the numbers of people exposed to the various concentrations of BSO. The difficulty of defining public exposure was noted by the National Task Force on Environmental Cancer and Health and Lung Disease in their 5th Annual Report to Congress, in 1982.[2] They reported that "...a large proportion of the American population works some distance away from their homes and experiences different types of pollution in their homes, on the way to and from work, and in the workplace. Also, the American population is quite mobile, and many people move every few years." They also noted the necessity and difficulty of dealing with long-term exposures because of "...the long latent period required for the development and expression of neoplasia [cancer]..."

The EPA's numerical expression of public exposure is based on two estimates. The first is an estimate of the magnitude and location of

long-term average ambient air concentrations of BSO in the vicinity of emitting sources based on air dispersion modeling using long-term estimates of source emissions and meteorological conditions. The second is an estimate of the number and distribution of people living in the vicinity of emitting sources based on 1980 Bureau of Census data which "locates" people by population centroids in census tract areas. The people and concentrations are combined to produce numerical expressions of public exposure by an approximating technique contained in a computerized model. The methodology is described in E.3 below.

E.1.4 Public Cancer Risks

By combining numerical expressions of public exposure with the unit risk estimate, two types of numerical expressions of public cancer risks are produced. The first, maximum individual risk, relates to the person or persons estimated to live in the area of the highest, long-term concentration as estimated by the computer model. Maximum individual risk is expressed as "maximum lifetime risk." As used here, the work "maximum" does not mean the greatest possible risk of cancer to the public. It is based only on the maximum annual average exposure estimated by the procedure used. The second measure, aggregate risk, is a summation of individual risks across the exposed popualtion (generally limited to the population within 50 kilometers of the emmitting sources). The aggregate risk is expressed as the incidence of cancer (number of cases) expected in the exposed population as result of 70 years; for convenience, it is often divided by 70 and expressed as expected annual cancer incidences. These calculations are described in more detail in E.4 below.

There are also risks of nonfatal cancer and other potential health effects, depending on which organs receive the exposure. No numerical expressions of such risks have been developed; however, EPA considers all of these risks when making regulatory decisions on limiting emissions of BSO.

E.2 UNIT RISK ESTIMATE [3]

The following discussion is summarized from a more detailed description of the Agency's derivation of the inorganic arsenic unit risk estimate as found in EPA's "Carcinogen Assessment of Coke Oven Emissions" (EPA-600/6-82-003F).

Several models have been used to relate cumulative lag-time-adjusted exposure from coke oven emissions to observed increases in the human respiratory cancer death rate. The parameters in the models were estimated using approximate exposure variables and mortality data generated by Lloyd, Redmond, and Mazumdar, and reworked by Land.[3] The resulting explicit models were in turn used to estimate the lifetime respiratory cancer death risk from a continuous exposure to 1 $\mu g/m^3$ of coal tar pitch volatiles from coke oven emissions.

Using the Weibull model, these estimates ranged from 1.30×10^{-8} for the 95 percent lower-bound, zero lag-time, and the nonwhite male background death rate assumption, to 1.05×10^{-3} for the 95 percent upper-bound, 15-year lag-time, and total background death rate assumption. However, these limits do not allow for the possibility that the Weibull model does not describe the true dose-response relationship at low exposure levels. As a result, even this range of 5 orders of magnitude does not fully describe the uncertainty associated with the point estimate.

To allow for possible model differences, the multistage model is also employed to estimate risk. This model has the advantage of simultaneously taking into account both parameter estimates and model difference variability. The 95 percent upper limit of this model is based upon finding a polynomial with the largest linear term that is still consistent with the observed data. Using this model, point estimates were obtained for the lifetime risk due to a constant 1 $\mu g/m^3$ exposure ranging from 1.76×10^{-6} for the zero lagtime case to 6.29×10^{-4} for the 15-year lag-time case. The 95 percent upper bounds corresponding to these extremes range from 2.57×10^{-4} to 1.26×10^{-3}. The geometric mean of the 95 percent upper bounds for the four lag times is calculated to be 6.17×10^{-4}, which is taken to be the composite unit risk estimate.

Numerous additional uncertainties exist concerning these estimates. The effects of age, sex, race, general health, and cigarette smoking on the sensitivity of responses to coke oven emissions are unknown. The way in which the data were collected and summarized by the researchers could also introduce additional biases and uncertainties. However, because of the unavailability of sufficient data to correct for these factors, the impact of these factors cannot be addressed in this assessment.

E.3 QUANTITATIVE EXPRESSIONS OF PUBLIC EXPOSURE

E.3.1 EPA's Human Exposure Model (HEM) (General)

The EPA's Human Exposure Model is a general model capable of producing quantitative expressions of public exposure to ambient air concentrations of pollutants emitted from stationary sources. HEM contains (1) an atmospheric dispersion model, with included meteorological data, and (2) a population distribution estimate based on Bureau of Census data. The input data needed to operate this model are source data, e.g., plant location, height of the emission release point, volumetric rate of release, and temperature of the off-gases. Based on the source data, the model estimates the magnitude and distribution of ambient air concentrations of the pollutant in the vicinity of the source. The model is programmed to estimate these concentrations for a specific set of points within a radial distance of 50 kilometers from the source. If the user wishes to use a dispersion model other than the one contained in HEM to estimate ambient air concentrations in the vicinity of a source, HEM can accept the concentrations if they are put into an appropriate format.

Based on the radial distance specified, HEM numerically combines the distributions of pollutant concentrations and people to produce quantitative expressions of public exposure to the pollutant.

E.3.1.1 Pollutant Concentrations Near a Source

The HEM dispersion model is a climatological model which is a sector-averaged gaussian dispersion algorithm that has been simplified to improve computational efficiency.[4] Stability array (STAR) summaries are the principal meteorological input to the HEM dispersion model. STAR data are standard climatological frequency-of-occurence summaries formulated for use in EPA models and available for major U.S. meteorological monitoring sites from the National Climatic Center, Asheville, N.C. A STAR summary is a joint frequency-of-occurence of wind speed, atmospheric stability, and wind direction, classified according to Pasquill's categories. The STAR summaries in HEM usually reflect five years of meteorological data for each of 314 sites nationwide. The model produces polar coordinate receptor grid points consisting of 10 downwind distances located along each of 16 radials which represent wind directions. Concentrations are estimated by the dispersion model for each of the 160 receptors located on this grid. The radials are

separated by 22.5-degree intervals beginning with 0.0 degrees and proceeding clockwise to 337.5 degrees. The 10 downwind distances for each radial are 0.2, 0.5, 1.0, 2.0, 5.0, 10.0, 20.0, 30.0, 40.0, and 50.0 kilometers. The center of the receptor grid for each plant is assumed to be the plant center. Concentrations at other points were calculated by using a log-linear scheme as illustrated in Figure E-1.

E.3.1.2 Methodology for Reviewing Pollutant Concentrations

Before making HEM computer runs, EPA reviewed small-scale U.S. Geological Survey topographical maps (scale 1:24,000) to verify location data for each BSO source. Plants were given accurate latitude and longitude values which were then incorporated into the HEM program.

The HEM results were compared to the limited data available for ambient BSO concentrations from monitoring sites near coke ovens.[5] The ambient concentrations are difficult to relate to predicted concentrations because of the many other sources of BSO and its nonspecific nature. However, the available BSO data and the HEM results were examined to determine if the predicted increases in BSO concentrations were reasonable when compared to the differences in ambient measurements upwind and downwind of coke plants.

The data from Wayne County (Detroit), Michigan are summarized in Table E-1. Meteorological data for Detroit were examined and indicated that the prevailing wind is from the west. (In February and March the wind shifts to the WNW, and during July to September it is generally WSW.) Consequently, the results for monitoring sites east of the plants are listed in Table E.1 as the downwind concentrations. The BSO data in Table E-1 show clearly that as the distance from the coke plants increases BSO concentrations decrease. Average downwind concentrations (east of the plants) range from 1.5 to 4 $\mu g/m^3$ greater than the upwind concentrations (west of the plants). Assuming no other significant BSO sources in the area of the coke plants, the data indicate that the coke oven emissions could add over 1 $\mu g/m^3$ to ambient BSO concentrations.

Dispersion model predictions for Rouge Steel (subsidiary of Ford Motor Company) and National Steel, which represent 83 percent of the coke capacity in Wayne County, are shown in Table E-2. (Detroit coke was not modeled because it is a dry coal battery not covered by the recommended NESHAP.)

Concentrations are presented for the areas east of the plants where the model predicted that the maximum concentrations would occur. The modeling predicts that the combined effects of the two major plants, if they were located on the same site, would increase ambient concentrations by 0.16 to 1.7 $\mu g/m^3$ at 1 km, 0.01 to 0.13 $\mu g/m^3$ at 5 km, and 0.004 to 0.043 $\mu g/m^3$ at 10 km. The Wayne County data showed increases of 1.5 to 4 $\mu g/m^3$ when comparing downwind to upwind ambient measurements. The comparison of measured differences to the model's predicted differences indicates that the dispersion modeling results are probably not overstated, and may be slightly low for the lower end of the range.

During 1978-1980, EPA Region 5 conducted ambient monitoring around 4 steel plants. Although the primary emphasis was on total particulate matter, BaP data were collected for all four sites and BSO data were obtained for one plant.[6] The BaP data for the four plants were collected at distances of 0.8 km (0.5 miles) to 3.2 km (2 miles) from the plants. Samples collected downwind from the plant all showed BaP levels from 12 to 20 times higher than background BaP levels. At the U.S. Steel plant (Lorain, Ohio), 16 out of 68 samples were identified as distinctly upwind or downwind. These samples were collected 1.5 to 3 km (1-2 miles) from the Lorain plant[3]:

	BaP ($\mu g/m^3$)	BSO ($\mu g/m^3$)
Downwind mean	12.6	7.1
Upwind Mean	0.6	3.2
Increase	12.0	3.9

The NESHAP dispersion model predictions for U.S. Steel at Lorain (existing control level) are compared to the measured increases below:

Model Prediction		Measured Increase	
Distance (km)	BSO ($\mu g/m^3$)	Distance (km)	BSO ($\mu g/m^3$)
1	0.44 - 4.6	-	-
2	0.14 - 1.5	1.5 - 3	3.9
5	0.033 to 0.34	-	-

Figure E.1 Group 2 BG/ED Interpolation

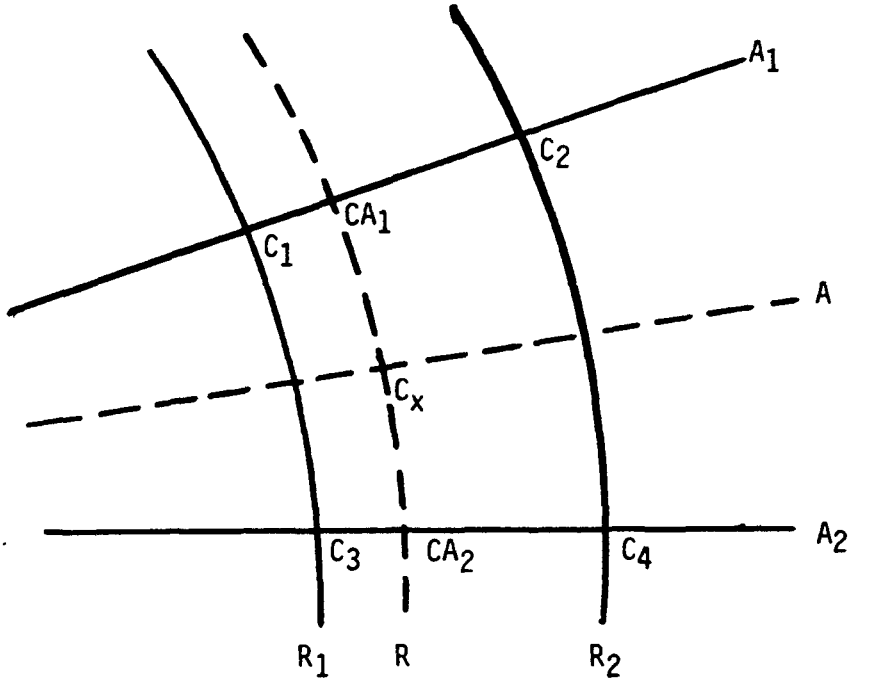

Given:

A - The angle in radians subtended clockwise about the source from due south to the BG/ED centroid;

A1 - The angle from due south to the radial line immediately counter-clockwise of A, or passing through A if there is an exact match;

A2 - The angle from due south to the radial line immediately clockwise of A1 (A2 is 0 if it is due south);

R - The distance in km from the source to the BG/ED centroid;

R1 - The distance from the source to the largest circular arc of radius less than R;

R2 - The distance from the source to the smallest circular arc of radius greater than or equal to R;

C1 - The natural logarithm of the concentration value at (A1, R1);

C2 - The natural logarithm of the concentration value at (A1, R2);

C3 - The natural logarithm of the concentration value at (A2, R1);

C4 - The natural logarithm of the concentration value at (A2, R2);

then:

RTEMP - ln(R/R1)/ln(R2/R1);

ATEMP - (A-A1)/(A2-A1);

CA1 - exp(C1 + (C2-C1)xRTEMP);

CA2 - exp(C3 + (C4-C3)xRTEMP); and

CX - CA1 + (CA2-CA1)xATEMP,

where CX is the interpolated concentration at the BG/ED centroid.

TABLE E.1. AMBIENT BSO DATA IN THE VICINITY OF WAYNE COUNTY COKE OVENS

Plant[a]	Distance to Coke Plants (km)	BSO Concentration ($\mu g/m^3$) 1978	1979	1980	1981	1982	Average
1	0.8	15.67	10.58	9.12	6.89	8.40	10.10
1,2,3	1.4 - 5	8.76	10.67	7.95	-	5.52	8.23
1,2,3	7.4 - 8.3	6.48	7.33	6.40	4.56	4.17	5.79
1,2,3	14 - 16	5.69	5.73	4.29	5.25	3.81	4.95
	Average	9.15	8.58	6.94	5.57	5.48	7.22
NONE[c]	9 - 10	5.99	4.72	5.03	-	3.47	4.80
NONE	12 - 16	4.08	4.76	4.79	-	3.15	4.20
NONE	22 - 26	3.86	3.52	3.96	3.92	2.50	3.56
	Average	4.64	4.33	4.59	3.92	3.04	4.13

[a] Prevailing wind is from the west; therefore, monitors east of the plant are associated with the plants' emissions.

[b] 1 = Rouge Steel; 2 = National Steel; 3 = Detroit Coke.

[c] None implies that the monitors are west of the plant.

TABLE E.2. DISPERSION MODEL PREDICTIONS OF BSO FOR WAYNE COUNTY COKE BATTERIES

	0.5 km	1 km	5 km	10 km
A. Rouge Steel				
BSO ($\mu g/m^3$)	0.21-2.2	0.066-0.69	0.0049-0.051	0.0017-0.017
B. National Steel				
BSO ($\mu g/m^3$)	0.32-2.7	0.098-1.0	0.0073-0.076	0.0025-0.026
C. Combined[b]				
BSO ($\mu g/m^3$)	0.53-4.9	0.16-1.7	0.012-0.13	0.0042-0.043

[a] Results for existing baseline controls. Ranges are derived from the ranges in the emission estimates.

[b] Assumes worst case with both plants at the same location.

These results again indicate that the range of estimates from the dispersion model does not overstate the increase in ambient concentrations when compared to actual measured increases from ambient data.

The comparisons made in this brief review are not refined and should be reviewed with caution because of the numerous assumptions required. However, the ambient data and emission test data show that coke ovens are an identifiable source of BSO emissions and that coke ovens contribute to ambient BSO concentrations. The ambient data also appear to indicate that the range of baseline dispersion modeling predictions for the increase in BSO levels is reasonable when compared with actual measured increases in BSO concentrations from coke ovens.[5]

E.3.3 Site-Specific Modeling

In its original risk assessment, EPA did not consider terrain effects or the effects of buoyancy of the fugitive emissions escaping from the coke oven batteries. At the same time, since the emissions are warmer than ambient air, they tend to rise. Consequently, after experiencing downwash initially, the plume may lift-off, thus lowering ground-level concentrations downwind. However, this effect can be offset in the presence of rising terrain.

Since the combined effect of terrain, downwash, and buoyancy on airborne BSO concentrations was unclear, additional dispersion analyses were carried out for two facilities. The coke ovens examined were U.S. Steel at Clairton, Pennsylvania, and LTV Steel at Chicago, Illinois. U.S. Steel-Clairton is intended to be representative of a facility located in a river valley while LTV Steel-Chicago is intended to be representative of one located in flat terrain.[7]

The analysis at Clairton was highly site-specific. On-site meteorological data were used. Each coke oven battery was represented individually based on a facility site plan. Plume rise from the coke oven batteries was considered explicitly. The calculations employed a buoyant line source treatment to account for natural convection about the ovens. The effect of downwash was also included. Actual ground elevations in the Clairton area were input to the LONGZ model to account for the effects of terrain.

At Chicago, detailed source information was not available. For this reason, all emissions were assumed to be collocated. However, the effects

of plume rise and downwash were both considered in the analysis using the treatment of coke oven batteries at Clairton as a prototype. National Weather Service meteorological observations from Chicago Midway Airport were processed and input to the Industrial Source Complex Long Term-Urban (ISCLTU) model. Review of the HEM inputs for these two facilities indicates that no plume rise should have been calculated by the program. Also, HEM selected meteorological data from Greater Pittsburgh Airport for U.S. Steel-Clairton and from Chicago O'Hare airport for LTV Steel-Chicago.

A comparison of the LONGZ and ISCLT estimates with those from HEM is shown graphically in Figures E.2 and E.3. These figures show normalized concentration estimates as a function of distance along a radial line to the north. The north radial was selected because at both facilities maximum concentrations beyond a kilometer occur in the north sector. Normalized concentrations are plotted to avoid confounding the comparison where differenct emission rates had been used in the various analyses. Normalized here means that the concentrations ($\mu g/m^3$) were divided by the emission rate (Kg) to yield a normalized concentration (m^{-3}) as to emission rate.

The LONGZ results show the substantial effect that terrain can have on ambient concentrations. Between a half and one kilometer, concentrations remain level as rising terrain intercepts the coke oven plumes. Between three and five kilometers the rate of decrease in concentration increases as dispersion changes from a predominately rural regime to a predominately urban one. Beyond about 20 kilometers concentrations decrease less rapidly as dispersion becomes limited by the depth of the mixing layer. At all distances, the LONGZ estimates are lower than HEM.

The ISCLTU results show a monotonic decrease with distance as expected in the absence of terrain. Again, beyond about 20 kilometers concentrations decrease less rapidly due to the limitation in vertical mixing. At all distances, the ISCLTU estimates are lower than HEM.

Also of interest is a comparison of the maximum estimated concentrations. At U.S. Steel-Clairton, LONGZ predicts a maximum normalized concentration of $2.5 \times 10^{-6} m^{-3}$. By comparison, the maximum normalized concentration from HEM is $12.5 \times 10^{-6} m^{-3}$, a factor of 5 higher. At LTV Steel-Chicago, ISCLTU predicts $3.75 \times 10^{-6} m^{-3}$. This compares to an HEM value of $10.8 \times 10^{-6} m^{-3}$, a factor of three higher.

Figure E.2 Comparison between Normalized Concentrations Predicted by HEM and LONGZ

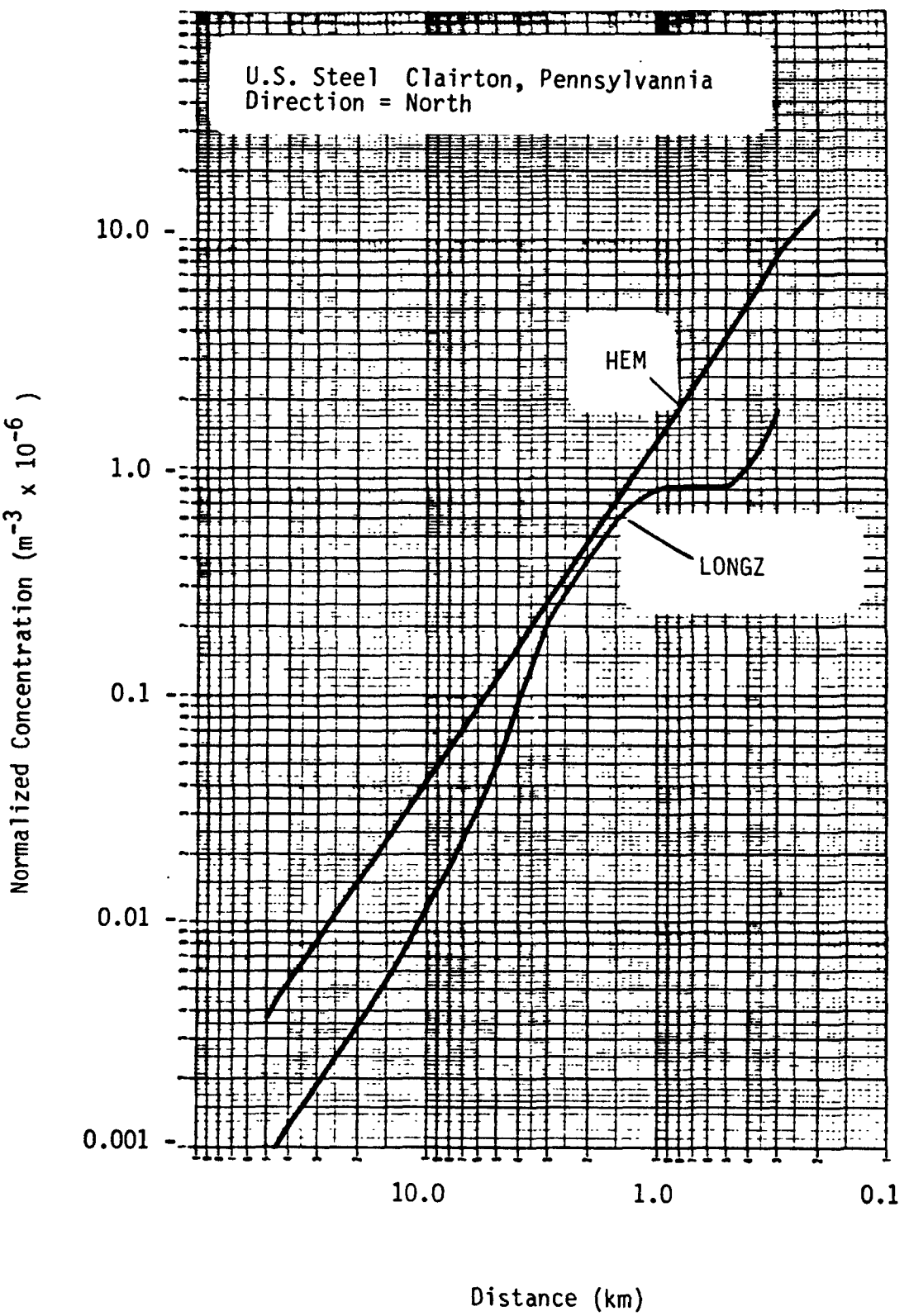

Figure E.3 Comparison between Normalized Concentrations Predicted by HEM and ISCLT

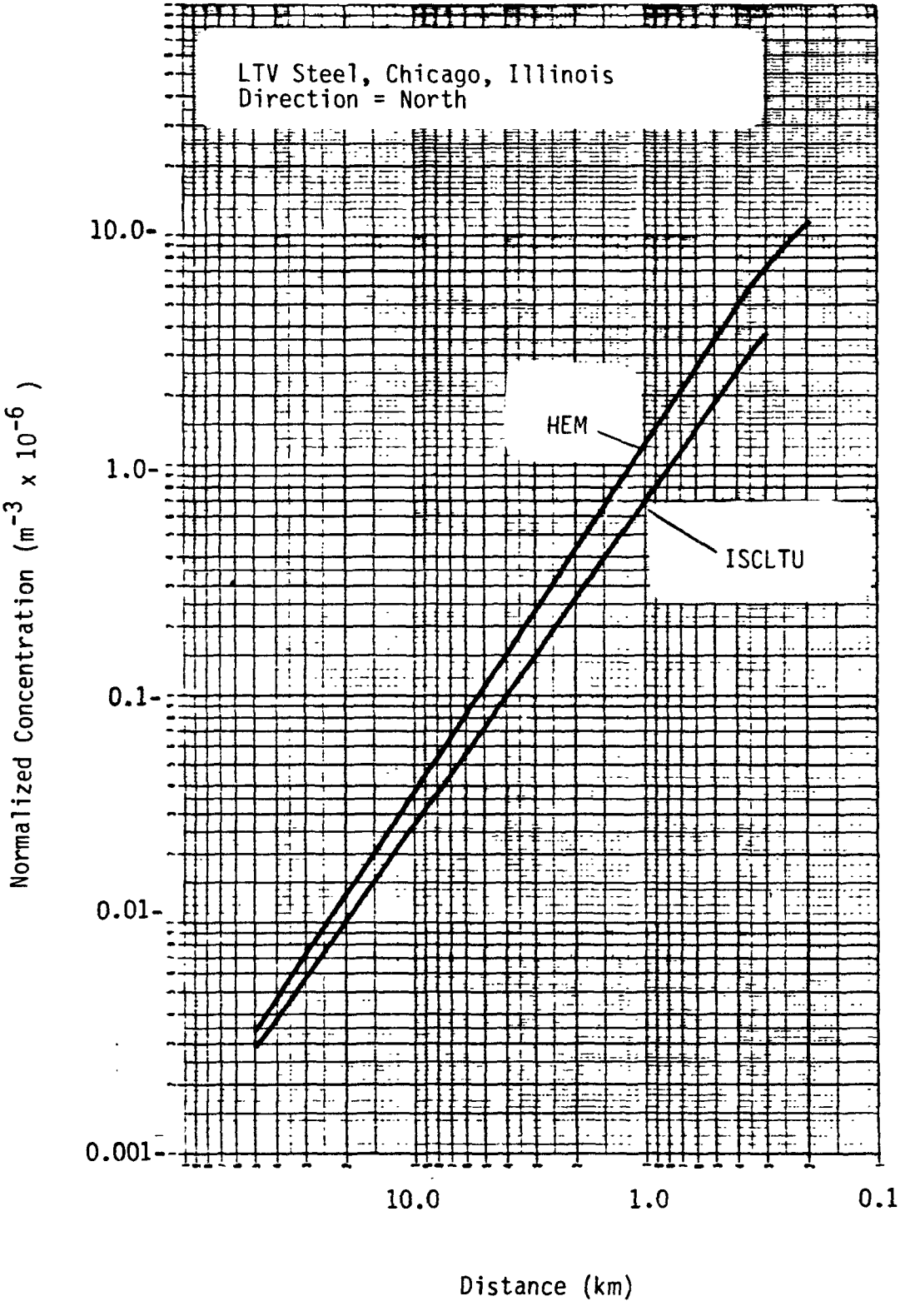

In summary, this evaluation shows that the HEM dispersion algorithm provides conservative concentration estimates for coke oven batteries when applied in this matter. Maximum concentrations from HEM are as much as a factor of five higher than more detailed analyses indicate. As previously discussed, however, measured ambient concentrations of BSO are higher than the HEM predictions. Although BSO may originate from sources other than coke ovens, these measured data indicate that the HEM predictions are not unreasonable.

At the remaining coke ovens where site-specific air dispersion analysis was not performed, the standard analysis (HEM) as described in section E.3.1 was used. Comparison of concentration profiles that were predicted by HEM, LONGZ and the ISCLT models and the comparison of modeling results to measured ambient concentrations indicate that the standard HEM analysis produces similar (although somewhat higher) results to the sophisticated air dispersion models. Since site-specific analysis is resource intensive and was not producing significantly different results from the standard analysis, acceptable risk estimates for the remaining smelters were produced by the HEM analysis.

E.3.4 Population Near A Source

To estimate the number and distribution of people residing within 50 kilometers of the coke oven, the HEM model uses the 1980 Master Area Reference File (MARF) from the U.S. Bureau of Census. This data base consists of enumeration district/block group (ED/BG) values. MARF contains the population centroid coordinates (latitude and longitude) and the 1980 population of each ED/BG (approximately 300,000 ED/BG) in the United States (50 States plus the District of Columbia). The HEM identifies the population around each plant, by using the geographical coordinates of the plant, and identifies, selects, and stores for later use those ED/BGs with coordinates falling within 50 kilometers of plant center.

E.3.5 Exposure[4]

The Human Exposure Model (HEM) uses the estimated ground level concentrations of a pollutant together with population data to calculate public exposure. For each of 160 receptors located around a plant, the concentration of the pollutant and the number of people estimated by the HEM to be exposed to that particular concentration are identified. The HEM

multiplies these two numbers to produce exposure estimates and sums these products for each plant.

A two-level scheme has been adopted in order to pair concentrations and populations prior to the computation of exposure. The two-level approach is used because the concentrations are defined on a radius-azimuth (polar) grid pattern with non-uniform spacing. At small radii, the grid cells are usually smaller than ED/BG's; at large radii, the grid cells are usually larger than ED/BG's. The area surrounding the source is divided into two regions, and each ED/BG is classified by the region in which its centroid lies. Population exposure is calculated differently for the ED/BG's located within each region. For ED/BG centroids located between 0.2 km and 3.5 km from the emission source, populations are divided between neighboring concentration grid points. There are 64 (4 x 16) polar grid points within this range. Each grid point has a polar sector defined by two concentric arcs and two wind direction radials. Each of these grid points and respective concentrations are assigned to the nearest ED/BG centroid identified from 1980 U.S. Census Bureau data. Each ED/BG can be paired with one or many concentration points. The population associated with the ED/BG centroid is then divided among all concentration grid points assigned to it. The land area within each polar sector is considered in the apportionment.

For population centroids between 3.5 km and 50 km from the source, a concentration grid cell, the area approximating a rectangular shape bounded by four receptors, is much larger than the area of a typical ED/BG. Since there is an approximate linear relationship between the logarithm of concentration and the logarithm of distance for receptors more than 2 km from the source, the entire population of the ED/BG is assumed to be exposed to the concentration that is logarithmically interpolated radially and arithmetically interpolated azimuthally from the four receptors bounding the grid cell. Concentration estimates for 96 (6 x 16) grid cell receptors at 5.0, 10.0, 20.0, 30.0, 40.0, and 50.0 km from the source along each of 16 wind directions are used as reference points for this interpolation.

In summary, two approaches are used to arrive at coincident concentration/population data points. For the 64 concentration points within 3.5 km of the source, the pairing occurs at the polar grid points using an apportionment of ED/BG population by land area. For the remaining

portions of the grid, pairing occurs at the ED/BG centroids themselves through the use of log-log and linear interpolation. (For a more detailed discussion of the model used to estimate exposure, see Reference 4.)

E.3.6 Public Exposure to Coke Oven Emissions (BSO)

E.3.6.1 Source Data

Forty-three coke ovens are included in the analysis. Table E-3 lists the model parameters used as input to the Human Exposure Model (HEM) for all of the plants. Table E.4 lists the specific plant names and locations. Table E.5 lists the emission rates used for baseline and BAT scenarios.

E.3.6.2 Exposure Data

Table E.6 lists, on a plant-by-plant basis, the total number of people encompassed by the exposure analysis and the total exposure. Total exposure is the sum of the products of number of people times the ambient air concentration to which they are exposed, as calculated by HEM. Table E.7 sums, for the entire source category (43 plants), the numbers of people exposed to various ambient concentrations, as calculated by HEM. (Source-by-source exposure results are provided in the EPA docket numbered A-83-33.)

E.4 QUANTITATIVE ESTIMATES OF PUBLIC CANCER RISKS FROM BSO

E.4.1 Methodology (General)

E.4.1.1 Two Basic Types of Risk

Two basic types of risk are dealt with in the analysis. "Aggregate risk" applies to all of the people encompassed by the particular analysis. Aggregate risk can be related to a single source, to all of the sources in a source category, or to all of the source categories analyzed. Aggregate risk is expressed as incidences of cancer among all of the people included in the analysis, after 70 years of exposure. For statistical convenience, it is often divided by 70 and expressed as cancer incidences per year. "Individual risk" applies to the person or persons estimated to live in the area of the highest ambient air concentrations and it applies to the single source associated with this estimate as estimated by the dispersion model. Individual risk is expressed as "maximum lifetime risk" and is defined as the probability of contracting cancer if continuously exposed to the estimated maximum ambient air concentration for 70 years.

TABLE E.3. MODEL PLANT PARAMETERS INPUT DATA FOR EACH COKE OVEN[a]

Stack Height	5 meters
Area of Release	10 square meters
Stack Diameter	0 meters
Gas Exit Velocity	0.1 meters/second
Gas Exit Temperature	298 degrees Kelvin

[a] These were model parameters which were used for all forty-three coke ovens.

TABLE E.4. WET-COAL CHARGED COKE PLANTS AND LOCATIONS

PLANT AND LOCATION	LATITUDE	LONGITUDE
1. Alabama By-Products, Tarrant, AL	33°34'57"	86°46'47"
2. Empire Coke, Holt, AL	33°14'25"	87°30'11"
3. Jim Walter, Birmingham, AL	33°33'40"	86°48'38"
4. Koppers Company, Woodward, AL	33°26'13'	86°57'50"
5. LTV Steel, Gadsden, AL	34°00'46"	86°02'38"
6. LTV Steel, Thomas, AL	33°32'47"	86°50'13"
7. U.S. Steel, Fairfield, AL	33°29'22"	86°55'32"
8. Interlake, St. Chicago, IL	41°39'22"	87°37'32"
9. National Steel, Granite City, IL	38°41'40"	90°07'42"
10. LTV Steel, S. Chicago, IL	41°41'29"	87°32'50"
11. Bethlehem Steel, Burns Harbor, IN	41°37'41"	87°10'20"
12. Citizens Gas & Coke Util. Indianapolis, IN	39°45'16"	86°06'49"
13. Indiana Gas & Chemical Terre Haute, IN	39°26'48"	87°23'47"
14. Inland Steel, E. Chicago, IN	41°37'53"	87°27'15"
15. LTV Steel, E. Chicago, IN	41°39'48"	87°26'42"
16. U.S. Steel, Gary, IN	41°36'55"	87°20'03"
17 Armco Inc., Ashland, KY	38°30'07"	82°40'08"
18. Bethlehem Steel, Sparrows Point, MD	39°13'10"	76°29'19"
19. Rouge Steel, Dearborn, MI	42°18'19"	83°09'40"
20. National Steel, Detroit, MI	42°15'16"	83°07'43"
21. Carondolet Corporation, St. Louis, MO	38°32'08"	90°16'05"
22. Tonawanda Coke Co., Buffalo, NY	42°58'56"	78°56'19"
23. Bethlehem Steel, Lackawanna, NY	42°49'20"	78°51'11"
24. Armco Steel, Middletown, OH	39°29'45"	84°23'15"
25. Koppers Company, Toledo, OH	41°40'10"	83°29'31"
26. New Boston Coke, Portsmouth, OH	38°44'57"	82°56'01"
27. LTV Steel, Cleveland, OH	41°28'26"	81°39'55"
28. LTV Steel, Warren, OH	41°13'13"	80°48'40"
29. U.S. Steel, Lorain, OH	41°26'56"	82°07'50"
30. Bethlehem Steel, Bethlehem, PA	40°36'51"	75°21'13"
31. LTV Steel, Aliquippa, PA	40°37'16"	80°14'24"
32. LTV Steel, Pittsburgn, PH	40°25'34"	79°57'47"
33. Koppers Company, Erie, PA	42°08'43"	80°01'32"
34. Shenango, Inc., Pittsburgh, PA	40°28'49"	80°03'34"
35. U.S. Steel, Clairton, PA	40°18'04"	79°52'21"
36. U.S. Steel, Fairless Hills, PA	40°09'28"	74°44'32"
37. Wheeling-Pittsburgh, Monessen, PA	40°09'46"	79°53'47"
38. Chattanooga Coke & Chem. Chattanooga, TN	35°02'16"	85°18'11"
39. Lone Star Steel, Lone Star, TX	32°54'59"	94°42'57"
40. U.S. Steel, Provo, UT	40°18'43"	111°44'31"
41. Weirton Steel, Browns Island, WV	40°24'58"	80°35'16"
42. Wheeling-Pittsburgh E. Steubenville, WV	40°20'36"	80°36'25"
43. Alabama By-Products Keystone, PA	40°05'12"	75°18'59"

TABLE E.5. COKE LOCATIONS AND EMISSION RATE FOR BASELINE AND BAT SCENARIOS

	PLANT	BASELINE EMISSIONS (KG/YR)	BAT EMISSIONS (KG/YR)
1	AL Byproducts, Tarrant, AL	20100	7110
2	Empire Coke, Holt, AL	9070	3190
3	Koppers, Woodward, AL	34800	12400
4	LTV Steel, Gadsden,AL	20200	7230
5	LTV Steel, Thomas,AL	10100	3610
6	Jim Walters, Birmingham, AL	18500	6600
7	U.S. Steel, Fairfield, AL	27600	12280
8	National Steel, Granite City, IL	9550	7920
9	Interlake, Chicago, IL	6500	5400
10	LTV Steel,So.Chicago,IL	3810	3270
11	Bethlehem Steel, Burns Harbor, IN	19800	9430
12	Citizens Gas, Indianapolis, IN	18800	8930
13	IN Gas, Terre Haute, IN	7180	3400
14	Inland Steel, E. Chicago, IN	44200	20960
15	U.S. Steel, Gary, IN	56300	26520
16	LTV Steel, E.Chicago,IN	19000	9050
17	Armco Inc.,Ashland,KY	9650	8150
18	Bethlehem Steel,Sparrows Pt., MD	32200	28800
19	Rouge Steel,Dearborn,MI	8000	7730
20	National Steel, Detroit, MI	11900	9110
21	Carondolet, St. Louis, MO	13500	4840
22	Tonawanda, Buffalo, NY	3550	3060
23	Bethlehem Steel, Lackawanna, NY	12600	11720
24	LTV Steel,Warren,OH	6050	4880
25	Armco Inc., Middletown,OH	28900	11110
26	New Boston, Portsmouth, OH	6100	3730
27	Koppers, Toledo, OH	4970	3040
28	LTV Steel, Cleveland,OH	27800	17550
29	U.S. Steel, Lorain, OH	37200	22510
30	AL Byproducts,Keystone,PA	8310	5650
31	Bethlehem Steel, Bethlehem, PA	28200	19350
32	LTV Steel, Aliquippa,PA	7970	5400
33	LTV Steel, Pittsburgh,PA	22200	15020
34	Koppers, Erie, PA	4390	2980
35	Shenango, Pittsburgh, PA	3400	2550
36	U.S. Steel, Clairton, PA	53800	38180
37	U.S. Steel, Fairless Hills, PA	12800	8800
38	Wheeling-Pitt, Monessen, PA	7210	4950
39	Chattanooga Coke, Chattanooga, TN	2360	2230
40	Lone Star Steel, Lone Star, TX	868	870
41	U.S. Steel, Provo, UT	13500	13530
42	Weirton Steel, Brown's Is.,WV	7600	4880
43	Wheeling-Pitt, E.Steubenville,WV	18700	12090

TABLE E.6. TOTAL EXPOSURE AND NUMBER OF PEOPLE EXPOSED
(COKE OVEN BATTERIES BASELINE EMISSIONS)

Plant	Total Number of People Exposed	Total Exposure (People - $\mu g/m^3$)
Alabama By-Products - Terrant, AL	810,000	2.29E+04
Empire Coke - Holt, AL	189,000	3.80E+03
Koppers Company - Woodward, AL	790,000	3.39E+04
LTV Steel - Gadsden, AL	335,000	1.01E+04
LTV Steel - Thomas, AL	803,000	1.39E+04
Jim Walters - Birmingham, AL	806,000	3.26E+04
U.S. Steel - Fairfield, AL	802,000	2.64E+04
National Steel - Granite City, IL	2,180,000	1.42E+04
Interlake - S. Chicago, IL	6,210,000	2.00E+04
LTV Steel - S. Chicago, IL	6,090,000	7.12E+03
Bethlehem Steel - Burns Harbor, IN	2,810,000	5.63E+03
Citizens Gas & Coke - Indianapolis, IN	1,190,000	2.98E+04
Indiana Gas & Chemical - Terre Haute, IN	242,000	6.64E+03
Inland Steel - E. Chicago, IN	5,340,000	6.51E+04
U.S. Steel - Gary IN	4,400,000	4.01E+04
LTV Steel - E. Chicago, IN	5,470,000	1.51E+04
ARMCO Inc. - Ashland, KY	436,000	4.36E+03
Bethlehem Steel - Sparrows Point, MD	2,530,000	3.32E+04
Rouge Steel - Dearborn, MI	4,170,000	1.65E+04
National Steel - Detroit, MI	4,040,000	1.64E+04
Corondolet Corporation - St. Louis, MD	2,210,000	3.30E+04
Tonawanda Coke Co. - Buffalo, NY	1,240,000	2.67E+03
Bethlehem Steel - Lackawanna, NY	1,260,000	2.01E+04
ARMCO Steel - Middletown, OH	2,170,000	2.70E+04
New Boston Coke - Portsmouth, OH	298,000	3.28E+03
Koppers Company - Toledo, OH	831,000	4.93E+03
LTV Steel - Cleveland, OH	2,570,000	4.72E+04
LTV Steel - Warren, OH	999,000	4.27E+03
U.S. Steel - Lorain, OH	1,720,000	2.39E+04
LTV Steel - Aliquippa, PA	2,230,000	6.49E+03
Bethlehem Steel - Bethlehem, PA	1,170,000	2.97E+04
Koppers Company - Erie, PA	333,000	2.05E+03
U.S. Steel - Clairton, PA	2,280,000	5.72E+04
U.S. Steel - Fairless Hills, PA	4,350,000	1.50E+04
Shenango, Inc. - Pittsburgh, PA	2,410,000	6.51E+03
LTV Steel - Pittsburgh, PA	2,340,000	6.38E+04
Alabama By-Products - Keystone, PA	4,910,000	2.40E+04
Wheeling-Pittsburgh - Monessen, PA	2,110,000	5.98E+03
Chattanooga Coke & Chem.- Chattanooga, TN	575,000	2.88E+03
Lone Star Steel - Lone Star, TX	184,000	4.61E+01
U.S. Steel - Provo, UT	750,000	3.31E+03
Weirton Steel - Browns Island, WV	1,230,000	3.45E+03
Wheeling-Pittsburgh - E. Steubensville, WV	1,030,000	7.75E+03

TABLE E.7. PUBLIC EXPOSURE TO BASELINE EMISSIONS AS PREDICTED BY THE HUMAN EXPOSURE MODEL

Concentration Level ($\mu g/m^3$)	Population Exposed (Persons)[a]	Exposure (Persons - $\mu g/m^3$)[b]
5.47E+01	<1	1.92E+01
5.00E+01	<1	1.92E+01
2.50E+01	105	3.38E+03
1.00E+01	1,580	2.47E+04
5.00E+00	3,800	4.03E+04
2.50E+00	13,900	7.50E+04
1.00E+00	47,300	1.24E+05
5.00E-01	125,000	1.77E+05
2.50E-01	297,000	2.37E+05
1.00E-01	1,000,000	3.43E+05
5.00E-02	2,100,000	4.19E+05
2.50E-02	4,770,000	5.12E+05
1.00E-02	12,300,000	6.29E+05
5.00E-03	21,900,00	6.96E+05
2.50E-03	38,400,000	7.54E+05
1.00E-03	64,600,000	7.98E+05
5.00E-04	80,200,000	8.09E+05
2.50E-04	86,000,000	8.12E+05
1.00E-04	88,700,000	8.12E+05
5.00E-05	88,800,000	8.12E+05
2.50E-05	88,800,000	8.12E+05
2.41E-05	88,800,000	8.12E+05

[a] Column 2 displays the computed value, rounded to the nearest whole number, of the cumulative number of people exposed to the matching and higher concentration levels found in column 1. For example, 0.5 people would be rounded to 0 and 0.51 people would be rounded to 1.

[b] Column 3 displays the computed value of the cumulative exposure to the matching and higher concentration levels found in column 1.

C.4.1.2 Aggregate Risk

Aggregate risk is calculated by multiplying the total exposure produced by HEM (for a single source, a category of sources, or all categories of sources) by the unit risk estimate. The product is cancer incidences among the included population after 70 years of exposure. The total exposure, as calculated by HEM, is illustrated by the following equation:

$$\text{Total Exposure} = \sum_{i=1}^{N} (P_i C_i)$$

where

Σ = summation over all grid points where exposure is calculated

P_i = population associated with grid point i,

C_i = long-term average inorganic arsenic concentration at grid point i,

N = number of grid points to 2.8 kilometers and number of ED/BG centroids between 2.8 and 50 kilometers of each source.

To more clearly represent the concept of calculating aggregate risk, a simplified example illustrating the concept follows:

EXAMPLE

This example uses assumptions rather than actual data and uses only three levels of exposure rather than the large number produced by HEM. The assumed unit risk estimate is 6.2×10^{-4} at 1 $\mu g/m^3$ and the assumed exposures are:

ambient air concentrations		number of people exposed to given concentration
2	$\mu g/m^3$	1,000
1	$\mu g/m^3$	10,000
0.5	$\mu g/m^3$	100,000

The probability of getting cancer if continuously exposed to the assumed concentrations for 70 years is given by:

concentration			unit risk		probability of cancer
2	$\mu g/m^3$	x	6.2×10^{-4}	$(\mu g/m^3)^{-1}$ =	1×10^{-3}
1	$\mu g/m^3$	x	6.2×10^{-4}	" =	6×10^{-4}
0.5	$\mu g/m^3$	x	6.2×10^{-4}	" =	3×10^{-4}

The 70 year cancer incidence among the people exposed to these concentrations is given by:

probability of cancer at each exposure level		number of people at each exposure level		after 70 years of exposure
1×10^{-3}	x	1,000	=	1
6×10^{-4}	x	10,000	=	6
3×10^{-4}	x	100,000	=	30
			TOTAL =	37

The aggregate risk, or total cancer incidence, is 37 and, expressed as cancer incidence per year, is 37 ÷ 70, or .5 cancers per year. The total cancer incidence and cancers per year apply to the total of 111,000 people assumed to be exposed to the given concentrations.

E.4.1.3 The Calculation of Individual Risk

Individual risk, expressed as "maximum lifetime risk," is calculated by multiplying the highest concentration to which the public is exposed, as reported by HEM, by the unit risk estimate. The product, a probability of

getting cancer, applies to the number of people which HEM reports as being exposed to the highest listed concentration. The concept involved is a simple proportioning from the 1 $\mu g/m^3$ on which the unit risk estimate is based to the highest listed concentration. In other words:

$$\frac{\text{maximum lifetime risk}}{\text{highest concentration to which people are exposed}} = \frac{\text{the unit risk estimate}}{1\ \mu g/m^3}$$

E.4.2 Risks Calculated for BSO Emissions

The explained methodologies for calculating maximum lifetime risk and cancer incidences were applied to each coke oven, assuming a baseline level of emissions. The baseline level of emissions is the level of emissions assumed for each battery at the performance levels defined by current state regulations or consent decrees.

Table E.7 summarizes the calculated risks. The analytical uncertainties of these numbers are discussed in section E.5 below.

E.4.2.1 Control Scenarios

The EPA completed HEM estimates of risk and incidence for the baseline case at each of 43 coke ovens (see discussion, Section E.3.1.2). These estimates are outlined in Table E.8. To ascertain the effect on maximum individual lifetime risk and on annual incidence, the BAT control scenario was also examined. Using BAT-based emissions estimates as inputs to the HEM model (Table E.5), EPA calculated risk and incidence values for the control option. Identical procedures were followed in risk and incidence calculations for the baseline and control scenerios.

E.5 ANALYTICAL UNCERTAINTIES APPLICABLE TO THE CALCULATIONS OF PUBLIC HEALTH RISKS CONTAINED IN THIS APPENDIX

E.5.1 The Unit Risk Estimate

The procedure used to develop the unit risk estimate is described in Reference 3. The model used and its application to epidemiological data have been the subjects of substantial comment by health scientists. The uncertainties are too complex to be summarized sensibly in this appendix. Readers who wish to go beyond the information presented in the reference should see the following Federal Register notices: (1) OSHA's "Supplemental

TABLE E.8. ANNUAL INCIDENCE AND MAXIMUM LIFETIME RISK FROM COKE OVEN EMISSIONS

	PLANT	BASELINE		BAT	
		Incidence	Max Risk	Incidence	Max Risk
1	Koppers, Woodward, AL	0.300	3.39E-02	0.107	1.21E-02
2	U.S. Steel, Gary, IN	0.350	2.60E-02	0.165	1.23E-02
3	U.S. Steel, Lorain, OH	0.210	2.37E-02	0.127	1.43E-02
4	Inland Steel, E. Chicago, IN	0.380	2.04E-02	0.275	9.68E-03
5	LTV Steel, Gadsden,AL	0.090	1.97E-02	0.032	7.06E-03
6	AL Byproducts, Tarrant, AL	0.200	1.96E-02	0.071	6.93E-03
7	LTV Steel, Cleveland,OH	0.420	1.77E-02	0.265	1.12E-02
8	Bethlehem Steel, Bethlehem, PA	0.260	1.45E-02	0.179	9.96E-03
9	Armco Inc., Middletown,OH	0.240	1.34E-02	0.092	5.15E-03
10	Carondolet, St. Louis, MO	0.290	1.26E-02	0.104	4.51E-03
11	Jim Walters, Birmingham, AL	0.290	1.24E-02	0.103	4.41E-03
12	LTV Steel, Pittsburgh,PA	0.570	1.17E-02	0.386	7.92E-03
13	Bethlehem Steel, Lackawanna, NY	0.180	1.02E-02	0.167	9.45E-03
14	LTV Steel, Thomas,AL	0.120	9.84E-03	0.043	3.53E-03
15	U.S. Steel, Fairless Hills, PA	0.130	9.83E-03	0.090	6.77E-03
16	Bethlehem Steel, Burns Harbor, IN	0.050	9.16E-03	0.024	4.37E-03
17	National Steel, Granite City, IL	0.130	8.91E-03	0.108	7.39E-03
18	LTV Steel, E.Chicago,IN	0.130	8.79E-03	0.062	4.18E-03
19	Wheeling-Pitt, E.Steubenville,WV	0.069	8.63E-03	0.045	5.59E-03
20	U.S. Steel, Fairfield, AL	0.230	8.06E-03	0.102	3.59E-03
21	Citizens Gas, Indianapolis, IN	0.260	8.04E-03	0.124	3.83E-03
22	U.S. Steel, Provo, UT	0.029	7.54E-03	0.029	7.54E-03
23	AL Byproducts,Keystone,PA	0.210	7.07E-03	0.143	4.80E-03
24	Empire Coke, Holt, AL	0.034	4.09E-03	0.012	1.44E-03
25	Wheeling-Pitt, Monessen, PA	0.053	3.80E-03	0.036	2.61E-03
26	New Boston, Portsmouth, OH	0.029	3.75E-03	0.018	2.29E-03
27	Rouge Steel,Dearborn,MI	0.150	3.54E-03	0.145	3.42E-03
28	LTV Steel, Aliquippa,PA	0.057	3.44E-03	0.039	2.33E-03
29	Weirton Steel, Brown's Is.,WV	0.031	3.28E-03	0.020	2.11E-03
30	IN Gas, Terre Haute, IN	0.059	3.07E-03	0.028	1.45E-03
31	Interlake, Chicago, IL	0.180	3.01E-03	0.150	2.50E-03
32	Tonawanda, Buffalo, NY	0.024	2.87E-03	0.021	2.48E-03
33	LTV Steel,Warren,OH	0.038	2.79E-03	0.031	2.25E-03
34	U.S. Steel, Clairton, PA [a]	0.220	2.60E-03	0.156	1.85E-03
35	Chattanooga Coke, Chattanooga, TN	0.026	2.33E-03	0.025	2.20E-03
36	Koppers, Toledo, OH	0.044	2.32E-03	0.027	1.42E-03
37	Shenango, Pittsburgh, PA	0.058	1.79E-03	0.044	1.34E-03
38	Armco Inc.,Ashland,KY	0.039	1.07E-03	0.033	9.04E-04
39	Lone Star Steel, Lone Star, TX	0.0004	6.61E-04	.000	6.61E-04
40	Koppers, Erie, PA	0.018	2.91E-04	0.012	1.97E-04
41	National Steel, Detroit, MI	0.140	2.86E-04	0.107	2.19E-04
42	Bethlehem Steel,Sparrows Pt., MD	0.290	2.82E-04	0.259	2.52E-04
43	LTV Steel,So.Chicago,IL [b]	0.031	2.81E-04	0.027	2.41E-04

a The value in the table was estimated with LONGZ. The HEM results for annual incidence and maximum lifetime risk are as follows: Baseline - 0.51, 2.83×10^{-2} and BAT - 0.362, 2.01×10^{-2}.

b The value reported in the table was estimated with ISCLTU. The HEM results for annual incidence and maximum lifetime risk are as follows; Baseline - 0.063, 1.76×10^{-3} and BAT - 0.054, 1.51×10^{-3}.

Statement of Reasons for the Final Rule", 48 FR 1864 (January 14, 1983); and (2) EPA's "Water Quality Documents Availability" 45 FR 79318 (November 28, 1980).

The unit risk estimate used in this analysis applies only to respiratory cancer. Other health effects are possible; such as neoplasms of the kidney and prostrate gland. No numerical expressions of risks relevant to these health effects are included in this analysis.

There are a number of uncertainties associated with the unit risk estimate. The estimate was made from an occupational study that involved exposures only after employment age was reached. In estimating risks from environmental exposures throughout life, it was assumed through the absolute-risk model that the increase in the age-specific mortality rates of lung cancer was a function only of cumulative exposures, irrespective of how the exposure was accumulated. Although this assumption provides an adequate description of all of the data, it may be in error when applied to exposures that begin very early in life if coke oven emissions are early stage carcinogens. Similarly, the linear models possibly are inaccurate at low exposures, even though they provide reasonable descriptions of the experimental data.

The risk assessment methods employed were severely constrained by the fact that they are based only upon the analyses performed and reported by the original authors--analyses that had been performed for purposes other than quantitative risk assessment. For example, although other measures of exposure might be more appropriate, the analyses were necessarily based upon cumulative dose, since that was the only usable measure reported. Given greater access to the data from these studies, other dose measures, as well as models other than the simple absolute-risk model, could be studied. It is possible that such wide analyses would indicate that other approaches are more appropriate than the ones applied here.

E.5.2 Public Exposure

E.5.2.1 General

The basic assumptions implicit in the methodology are that all exposure occurs at people's residences, that people stay at the same location for 70

years, that the ambient air concentrations and the emissions which cause these concentrations persist for 70 years, and that the concentrations are the same inside and outside the residences. Hence, public exposure is based on a hypothetical premise. It is not known whether this results in an over-estimation or an underestimation of public exposure.

E.5.2.2 The Public

The following may affect the public health impacts as estimated in this analysis, however, the amount and type of effect is not known:

1. Studies show that all people are not equally susceptible to cancer. There is no numerical recognition of the "most susceptible" subset of the population exposed.

2. Studies indicate that whether or not exposure to a particular carcinogen results in cancer may be affected by the person's exposure to other substances. The public's exposure to other substances is not numerically considered.

3. Some members of the public included in this analysis are likely to be exposed to BSO in the air in the workplace, and workplace air concentrations of a pollutant are customarily much higher than the concentrations found in the ambient, or public air. Workplace exposures are not numerically approximated.

4. Studies show that there is normally a long latency period between exposure and the onset of lung cancer. This has not been numerically recognized.

5. The people dealt with in the analysis are not located by actual residences. As explained previously, people are grouped by census districts and these groups are located at single points called the population centroids. The effect is that the actual locations of residences with respect to the estimated ambient air concentrations are not known and that the relative locations used in the exposure model may have changed since the 1980 census.

6. Many people exposed to coke oven emissions are subject to exposure to ambient air concentrations of BSO where they travel and shop (as in downtown areas and suburban shopping centers), where they congregate (as in public parks, sports stadiums, and schoolyards), and where they work outside (as mailmen, milkmen, and construction workers). These types of exposures are not numerically dealt with.

E.5.2.3. The Ambient Air Concentrations

The following are relevant to the estimated ambient air concentrations of BSO used in this analysis:

1. Flat terrain was assumed in the dispersion model. Concentrations much higher than those estimated would result if emissions impact on elevated terrain or tall buildings near a plant.

2. The estimated concentrations do not account for the additive impact of emissions from plants located close to one another.

3. The increase in concentrations that could result from re-entrainment of BSO-bearing dust from, e.g., city streets, dirt roads, and vacant lots, is not considered.

4. Meteorological data specific to plant sites are not used in the dispersion model. As explained, HEM uses the meteorological data from the STAR station nearest the plant site. Site-specific meteorological data could result in significantly different estimates, e.g., the estimated location of the highest concentrations.

5. Fugitive emissions from coke ovens are very difficult to measure accurately and not only from battery to battery but also vary at the same battery overtime. For door leaks, emission estimates range from 0.021 kg/hr for a single small leak to 0.7 kg/hr for a heavily leaking door. Assumptions and theoretical models are used to relate visible emissions (e.g., percent leaking doors) to mass emissions. Consequently, the emission estimates are subject to uncertainties that may be significant for a specific battery depending upon the site-specific characteristics of the battery and its emissions.

E.6 REFERENCES

1. National Academy of Sciences, "Arsenic," Committee on Medical and Biological Effects of Environmental Pollutants, Washington, D.C., 1977. Docket Number (OAQPS 79-8) II-A-3.
2. U.S. EPA, et.al., "Environmental Cancer and Heart and Lung Disease," Fifth Annual Report to Congress by the Task Force on Environmental Cancer and Health and Lung Disease, August, 1982.
3. Carcinogen Assessment of Coke Oven Emissions - Final Report. EPA-600/6-82-003F, February 1984.
4. Systems Application, Inc., "Human Exposure to Atmospheric Concentrations of Selected Chemicals." (Prepared for the U.S. Environmental Protection Agency, Research Triangle Park, North Carolina). Volume I, Publication Number EPA-2/250-1, and Volume II, Publication Number EPA-1/250-2.
5. Branscome, Marvin. Research Triangle Institute. Ambient Data for Indicators of Coke Oven Emissions. Docket Number A-79-15. August 1985.
6. Regan, G. F. EPA Region 5. Benzo-a-pyrene as a Tracer for Coke Oven Emissions. Paper provided by the author.
7. Pearson, Johnnie L. (1985). Evaluation of Coke Oven Emission Dispersion Estimates, Memorandum to Robert G. Kellam, EPA, Office of Air Quality Planning and Standards, Research Triangle Park, North Carolina 27711, August 1985.

TECHNICAL REPORT DATA
(Please read Instructions on the reverse before completing)

1. REPORT NO.	2.	3. RECIPIENT'S ACCESSION NO.
EPA-450/3-85-028a		

4. TITLE AND SUBTITLE	5. REPORT DATE
Coke Oven Emissions from Wet-Coal Charged By-Product Coke Oven Batteries--Background Information for Proposed Standards	April 1987
	6. PERFORMING ORGANIZATION CODE
7. AUTHOR(S)	8. PERFORMING ORGANIZATION REPORT NO.
9. PERFORMING ORGANIZATION NAME AND ADDRESS Office of Air Quality Planning and Standards U.S. Environmental Protection Agency Research Triangle Park, North Carolina 27711	10. PROGRAM ELEMENT NO.
	11. CONTRACT/GRANT NO.
12. SPONSORING AGENCY NAME AND ADDRESS DAA for Air Quality Planning and Standards Office of Air and Radiation U.S. Environmental Protection Agency Research Triangle Park, North Carolina 27711	13. TYPE OF REPORT AND PERIOD COVERED Draft
	14. SPONSORING AGENCY CODE EPA/200/04
15. SUPPLEMENTARY NOTES	

16. ABSTRACT

National emission standards to control coke oven emissions from new and existing wet-coal charged by-product coke oven batteries are being proposed under Section 112 of the Clean Air Act. The standards apply to charging, topside, and door leaks. This document contains information on the background and authority, emission control techniques, regulatory alternatives considered, and the economic and health impacts associated with the proposed standards.

17. KEY WORDS AND DOCUMENT ANALYSIS

a. DESCRIPTORS	b. IDENTIFIERS/OPEN ENDED TERMS	c. COSATI Field/Group
Air Pollution Wet-Coal Charged Coke Oven Batteries Pollution Control Coke Oven Emissions Emission Standards Control Costs	Air Pollution Control Hazardous Air Pollutants	

18. DISTRIBUTION STATEMENT	19. SECURITY CLASS *(This Report)*	21. NO. OF PAGES
	Unclassified	500
	20. SECURITY CLASS *(This page)*	22. PRICE
	Unclassified	

EPA Form 2220-1 (Rev. 4-77) PREVIOUS EDITION IS OBSOLETE