EPA 440/1-83/304

Combined Sewer Overflow Toxic Pollutant Study

Pilot Study

prepared by

E.C. Jordan Co.
562 Congress Street
Portland, Maine 04112

prepared for

U.S. Environmental Protection Agency
Effluent Guidelines Division

EPA Project Officer
Robert M. Southworth, P.E.

March 1983

DISCLAIMER

This report received a peer and administrative review by the U.S. Environmental Protection Agency (EPA), and was approved for publication. Approval does not signify that the contents necessarily reflect the views and policies of the EPA, nor does mention of trade names or commercial products constitute endorsement or recommendation for their use.

U.S. Environmental Protection Agency

ABSTRACT

This pilot-scale study was initiated to establish site selection criteria and sampling methodologies for a full scale combined sewer overflow (CSO) toxic pollutant study and to characterize the levels of priority pollutants in combined sewer flows, combined sewer sediments, storm runoff, and combined sewer overflows.

The two sewerage systems selected for the pilot study were: 1) a system tributary to the 26th Ward Sewage Treatment Plant in Brooklyn, New York; and 2) a system tributary to the Passaic Valley Sewage Treatment Plant in Newark, New Jersey.

The pilot study assessed both site selection criteria and sampling methodologies for a full-scale study. The program was tailored to develop a sampling plan to monitor toxic pollutants in combined sanitary/storm water collection systems during wet weather conditions, and if present, to estimate the magnitude, source, and fate of the priority toxic pollutants. Samples of dry weather background flows, combined sewer overflows, urban runoff, first flush, and sewer sediments were collected and analyzed during the study. As a result of the experience gained during the field monitoring phase of the pilot study, recommended sampling techniques for a full-scale study are presented.

After collecting dry weather background samples, three storm events were sampled in both cities. Results of this study indicate that metal pollutants had the highest concentrations in the combined sewer flow, combined sewer overflow, and runoff samples. Lead, copper, and zinc were the most prevalent pollutants detected. Acid, volatile, base-neutral, and pesticide pollutants were not detected in any observable pattern and, when detected, were generally at low concentrations.

This report was submitted in fulfillment of Contract No. 68-01-5772 by the E.C. Jordan Company under the sponsorship of the U.S. Environmental Protection Agency. This report covers the period February 26, 1981, to December 31, 1982.

CONTENTS

Abstract iii
Figures vi
Tables vii
Abbreviations and Symbols. viii
Acknowledgement. ix

1.0 Summary and Conclusions. 1
1.1 Summary 1
1.2 Conclusions 2
2.0 Introduction 5
2.1 Background. 5
2.2 Purpose 7
2.3 Scope 7
3.0 Site Selection 9
3.1 Criteria 9
3.2 Sewerage Systems Inspected 9
4.0 Description of Selected Study Areas 11
4.1 26th Ward Drainage Area - Brooklyn, New York 11
Hendrix Street Regulator Chamber 12
Williams Street Regulator Chamber. 12
4.2 Passaic Valley Drainage Area - Newark, New Jersey 17
Herbert Place Regulator Chamber. 25
Rector Street Regulator Chamber. 25
Saybrook Place Regulator Chamber 26
5.0 Sampling Program 27
5.1 Introduction 27
5.2 Methodology 27
5.2.1 Dry Weather Sampling 27
5.2.2 Wet Weather Sampling 28
5.3 Pilot Study Evaluations 35
5.4 General Considerations 41
6.0 Flow Monitoring 44
6.1 General 44
6.2 Methodologies 44
7.0 Data Evaluation 48
7.1 26th Ward Drainage Area 48
7.2 Passaic Valley Drainage Area 49
8.0 Criteria for Full Scale CSO Study 56
8.1 General 56
8.2 Sampling Program 56
8.3 Site Selection 60

References 63

CONTENTS (Continued)

Appendices 64

A. Field Sampling Trip Reports
B. Analytical Results

FIGURES

Number		Page
2.1	Typical Combined Sewer Collection Network	6
4.1	Location of the Hendrix Street and Williams Avenue Catchment Areas	13
4.2	Hendrix Creek Combined Sewer Drainage Area.	14
4.3	Hendrix Street Regulator Plan View.	15
4.4	Williams Avenue Combined Sewer Drainage Area.	16
4.5	Williams Avenue Regulator Plan View	18
4.6	Drainage Area Tributary to Passaic Valley Sewerage System - Newark, New Jersey	19
4.7	Herbert Place Drainage Area - Newark, New Jersey.	20
4.8	Rector Street and Saybrook Place Drainage Areas - Newark, New Jersey.	21
4.9	Schematic of Herbert Place Regulator Chamber.	22
4.10	Schematic of Rector Street Regulator Chamber.	23
4.11	Schematic of Saybrook Place Regulator Chamber	24
5.1	Typical Nonrecording Precipitation Gauge.	30
5.2	Typical Weighing-Type Recording Rain Gauge.	30
5.3	Alter Precipitation Gauge	31
5.4	Plan View of the 26th Ward Interceptor System	36
8.1	Sample Compositing Scheme	58

TABLES

Number		Page
6.1	Summary of Selected Pollutants Detected During Dry Weather Sampling - Newark, NJ	50
6.2	Comparision of Dry Weather and Wet Weather Background Results - Newark, NJ.	51
6.3	Summary of Storm One Pollutant Concentrations - Newark, NJ.	53
6.4	Comparision of First Flush Mass Flux to Background Mass Loadings - Newark, NJ.	55
8.1	Recommended Sample Locations and Sampling Techniques . .	57

LIST OF ABBREVIATIONS AND SYMBOLS

BOD_5 -	biochemical oxygen demand
BRISC -	Burns and Roe Industrial Services Corporation
CFS -	cubic feet per second
cm -	centimeter
COD -	chemical oxygen demand
CS -	combined sewer
CSF -	combined sewer flow
CSO -	combined sewer overflow
° -	degrees
°C -	degrees centrigrade
DWF -	dry weather flow
Dup -	duplicate
EPA -	Environmental Protection Agency
GPD -	gallons per day
HLWW -	high level wet well
LLWW -	low level wet well
mgd -	million gallons per day
mg/l -	milligrams per liter
min -	minutes
ml -	milliliter
PAH -	polynuclear aromatic hydrocarbons
POTW -	publicly owned treatment works
PVSC -	Passaic Valley Sewage Commission
QA/QC -	quality assurance/quality control
SCSS -	Storm and Combined Sewer Section
STP -	sewage treatment plant
TDS -	total dissolved solids
TOC -	total organic carbon
TS -	total solids
TSS -	total suspended solids
VOA -	volatile organic analyte

ACKNOWLEDGMENTS

This report was conducted under contract to the U.S. Environmental Protection Agency. The cooperation and efforts of Jeffery D. Denit, Division Director, Effluent Guidelines Division (EGD); Robert Crim, EGD Branch Chief; Robert M. Southworth, EGD Project Officer; and Thomas P. O'Farrell, Project Manager, Office of Water Regulations and Standards are appreciated. Acknowledgment is given to Richard Fields and Robert Turkeltaub, Municipal Environmental Research Laboratory - Storm and Combined Sewer Section, for assisting in the development of the project work plan.

Burns and Roe Industrial Services Corporation (BRISC), Paramus, New Jersey, conducted all field activities for this project. The E.C. Jordan Company, Portland, Maine, prepared this report based on the data provided by BRISC. This report was written by Mike A. Crawford, P.E., Project Engineer under the direction of Donald R. Cote, P.E., Principal-in-Charge; Willard C. Warren, P.E., Project Manager; and Robert A. Steeves, Technical Project Director. Technical contributions during the report preparation were made by Robert Steeves, Mehdi Nasser-Miremadi and Charles Goodwin. Analytical work was performed by USEPA Region VII Laboratory, Kansas City, Missouri and BRISC, Paramus, New Jersey.

SECTION 1
SUMMARY AND CONCLUSIONS

SUMMARY

The U.S. Environmental Protection Agency (EPA) has conducted several studies to determine the presence of toxic pollutants in wastewater discharged from publicly owned treatment works (POTWs). Results indicated that the amount of priority toxic pollutants found in the influent to POTWs served by combined sewers increases significantly during, and immediately following, a storm event. To obtain the information needed to characterize priority pollutants in combined sewers and combined sewer overflows (CSO), a two-phase (pilot-scale and full-scale) study was initiated.

The CSO pilot-scale study was conducted to estimate the amount of priority pollutants in CSOs and to establish criteria for conducting the full-scale study. The two sewerage systems selected for the pilot study were: 1) a system tributary to the 26th Ward Sewage Treatment Plant in Brooklyn, New York; and 2) a system tributary to the Passaic Valley Sewage Treatment Plant in Newark, New Jersey.

Samples of rainfall, stormwater runoff, sewerage system sediment, dry weather flow, wet weather combined sewer flow (CSF), combined sewer overflow (CSO), and "first flush" flows were collected from the selected systems and analyzed for priority pollutants and selected conventional and nonconventional pollutants. Various sampling and flow measurement techniques were evaluated to establish criteria and protocols for Phase II, the full-scale study.

Results from the six storm events sampled (three in Brooklyn and three in Newark) identified metals at the highest concentrations in the CSF, CSO, and runoff samples. Lead, zinc and copper were the most prevalent pollutants detected. Lead concentrations ranged from 1,240 µg/l to 55 µg/l in runoff samples and from 920 µg/l to 80 µg/l in CSF and CSO samples; zinc concentrations ranged from 637 µg/l to 150 µg/l in runoff samples and from 1,000 µg/l to 166 µg/l in CSF and CSO samples; and copper ranged from 209 µg/l to 28 µg/l in runoff samples and 453 µg/l to 36 µg/l in CSF and CSO samples. All three pollutants demonstrated definite dilution or first flush patterns (higher concentrations during the initial phase of the storm event followed by a dilution effect as the storm progressed) in both runoff samples and CSO samples.

Zinc (70 µg/l) and cyanide (54 µg/l) were the priority pollutants present at the highest concentration in precipitation samples. The majority of other pollutants were not detected above their analytical detection limit in the rainfall samples.

Acid extractable organics and pesticides were not detected at all in Brooklyn and only sporadically detected above the analytical detection limit (a combined total of 13 occurrences) in Newark. Base-neutral compounds were detected slightly more often than pesticides and acid extractable organics, although not in any observable pattern. Bis(2-ethylhexyl)phthalate was the base-neutral compound detected at the highest average concentration in both CSO and runoff samples.

Volatile organic compounds were occasionally detected in runoff and CSO samples in Newark. Chloroform, trichlorofluoromethane (delisted as a priority toxic pollutant recently), and methylene chloride were the compounds detected at the highest concentrations. Trichloroethylene and 1,1,2,2-tetrachloroethene were consistently detected in the CSO, but not in the runoff in Brooklyn.

CONCLUSIONS

1. The concentration of lead, copper, and zinc in CSOs appears to be the result of the drainage area being flushed by runoff during the initial phase of a given storm event.

2. The presence of volatile organic compounds in CSOs appears to be site specific, inferring that land use patterns may be associated with the source of the pollutants.

3. Acid extractable organics, base-neutral compounds, and pesticides are not prevalent in CSOs or in runoff. These compounds were only detected sporadically in the samples collected; when present, the concentrations were close to or below the normal analytical detection limits for these compounds.

4. In the site selection process for a wet weather sampling program, initial communications with municipal authorities should determine the willingness of the authority to participate in the program, the requirements for insurance/indemnification agreements, and the applicability of the collection system to the program objectives.

5. Potential sample locations should be inspected to ensure that the physical arrangement of the regulator chamber is amenable to the program objectives. Sample locations should be inspected under projected study conditions, i.e., wet weather, to identify potential sampling problems.

6. Catchment areas selected for sampling should have well-defined boundaries and be tributary to a single regulator structure. This helps to identify sources of pollutants and to establish correlations between pollutant mass and different variables.

7. The selected regulator locations should be arranged such that both CSF and CSO are accessible and adaptable for representative sampling and accurate flow monitoring. In particular, fluctuations of the receiving water elevation should be considered.

8. The size and shape of the selected catchment area should be carefully reviewed since this will, to a large extent, determine the frequency and duration of an overflow.

9. Availability of relevant historical information, existing in-place sampling equipment, and in-place flow monitoring equipment should be evaluated for use in the program.

10. Selected sample locations should not pose any safety hazards for the sample crews. Locations should be amenable to sampling and flow monitoring from street elevation during storm conditions.

11. Use of either manual or automated mechanical sampling techniques is dependent upon both the physical characteristics of the selected sample locations in the sewerage system and sampling protocol requirements.

12. To thoroughly inventory pollutants in a collection system, samples of tap water and dry weather flow should be collected and analyzed. Dry weather samples should also be collected as close to the start of a storm event as possible.

13. Accurate sampling techniques dictate that samples be collected from a well-mixed, turbulent flow location. Further, to truly represent the pollutant mass flux at the selected sample locations, sample aliquots should be composited on a flow-proportioned basis.

14. Accurate flow rates are vital for CSO monitoring in order to calculate pollutant mass loads as well as to determine the proportions in which sample aliquots should be composited. CSO flow monitoring techniques to be used at selected locations are dependent upon the physical arrangement of the regulator chamber.

15. Runoff sample locations should be selected during wet weather conditions when the boundaries of the runoff area can be reliably documented and flow rates estimated. As many runoff locations as possible should be sampled and composited into a single runoff sample per catchment area. Manual grab sampling of runoff is more appropriate than the use of automatic samplers.

16. The "first flush" event is a site-specific phenomenon and must be evaluated in detail at each sampling location based on the characteristics of the storm event, catchment area, sewerage system, and catchment area runoff management practices. Conductivity and settleable solids measurements are two in-situ measurements suitable for estimating initiation and duration of the the first flush period. A comparison of these two methods should be conducted in the field to further identify the method that is best suited for a particular site.

17. Rain gauges and collection equipment must be strategically located within the selected catchment areas and be free from influences from aerial obstructions, vandalism, etc. Gauges should be the recording type so that the intensity of a storm can be evaluated. Collectors

must be constructed of stainless steel, pyrex, or be teflon coated and sized to collect 2.5 gallons per storm event.

18. Sediment samples should be collected during extended dry periods and should be collected as close to the regulator chamber as possible.

19. Entry to the sewerage system, although usually necessary for equipment calibration, should be minimized in order to avoid associated safety hazards.

20. Adequate advance storm warning is needed to minimize the number of false starts and to ensure that sample crews are on-site during the initial periods of the storm. A professional meteorologist should be consulted.

SECTION 2
INTRODUCTION

2.1 BACKGROUND

To determine the presence of priority toxic pollutants in wastewater discharges, the U.S. Environmental Protection Agency (EPA) has conducted several studies focusing on: 1) priority pollutants from residential, commercial, and industrial areas[1]; 2) priority pollutants associated with urban runoff[2]; 3) the occurrence and fate of priority pollutants in publicly owned treatment works (POTWs) (two separate studies totaling 50 POTWs)[3]; and 4) a 30 consecutive day evaluation of the variability and fate of priority pollutants at one POTW[4]. One potential source of priority toxic pollutants that had not been studied until now was combined sewer flow and combined sewer overflow (CSO).

Combined sewers are conduits that serve to transport sanitary sewage during dry weather conditions and combined sanitary sewage and storm water runoff during wet weather periods. The concept of combined sewers was developed when the primary objective of collection networks was to transport sewage to the local receiving streams. Treatment of dry weather flows has evolved over the years. The capacity of municipal treatment plants is usually not adequate, however, for the large quantities of combined wastewater that may result during storm conditions. The excess wastewater that cannot be treated at the publicly owned treatment works (POTW) is usually diverted directly to the receiving streams untreated (shown as CSO in Figure 2.1).

A hypothetical CSO scenario is as follows: sanitary sewage flowing at a dry weather design discharge rate is intercepted at a regulator chamber, conveyed to a publicly owned treatment works (POTW) for physical, biological, or chemical treatment, and discharged to the receiving stream. Precipitation begins to fall, first accumulating in depressions and storage areas within the drainage area. The normal dry weather sanitary waste stream continues to flow to the POTW; the volume of precipitation continues to increase and the depressions and storage areas within the drainage area are exceeded, resulting in runoff. The runoff is gentle at first, increasing in velocity and volume as the storm progresses. The runoff contacts dry weather pollutants that have accumulated on the streets, in the gutters, and on the roofs of buildings. Portions of this debris are transported to the sewerage system as runoff and enter the collection system, combining with the dry weather sanitary sewage.

The combined sewer flow enters the regulator chamber that diverts the flow to either the treatment plant or, if flows are excessive, directly to the receiving waters untreated. As the storm continues, the volume of

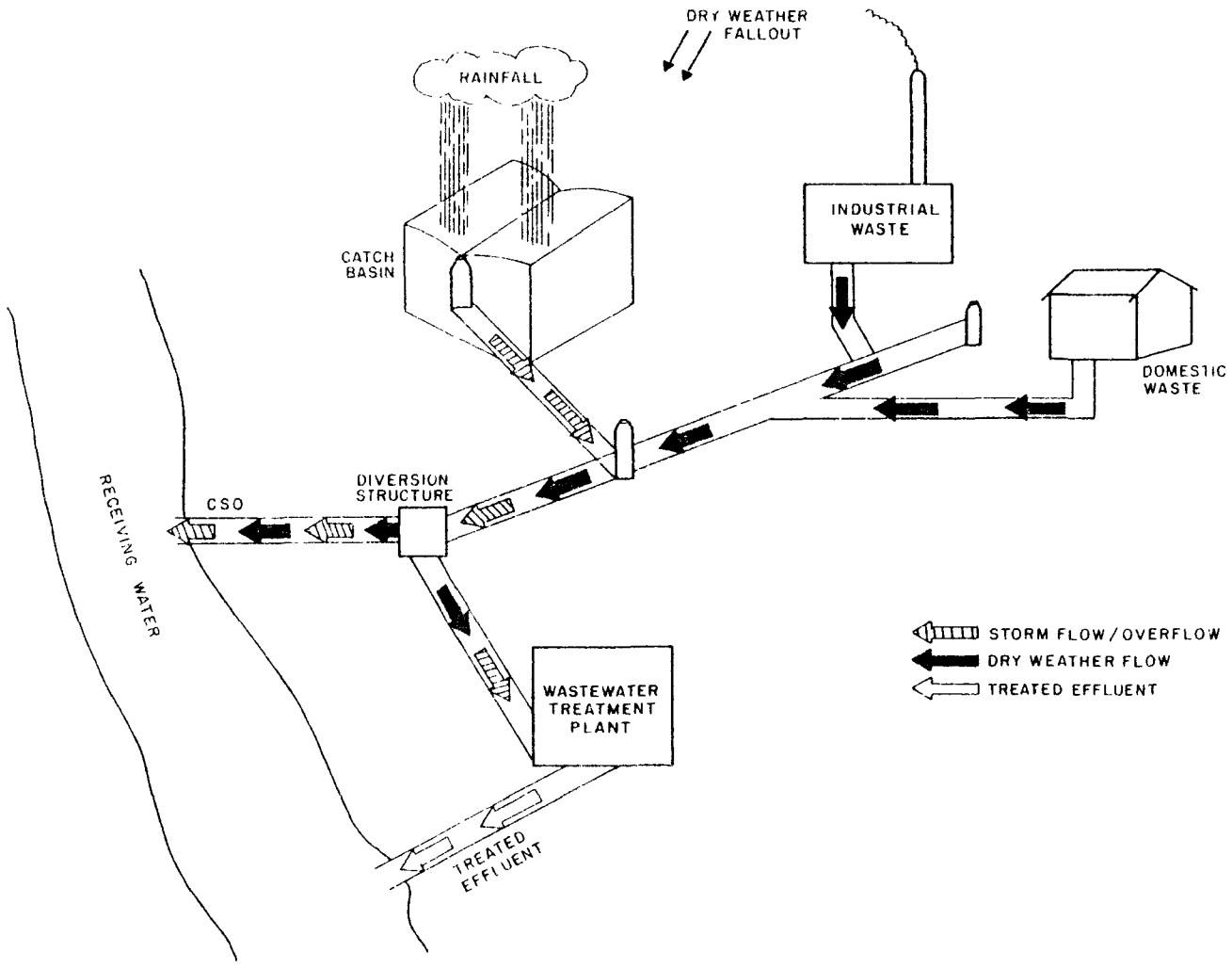

FIGURE 2.1 TYPICAL COMBINED SEWER COLLECTION NETWORK

untreated wastewater increases as does the cumulative mass of pollutants discharged. At the conclusion of the storm event, the flow gradually recedes until overflow conditions no longer exist.

Results of the studies conducted by EPA at 50 POTWs indicated that the concentration of priority toxic pollutants (particularly metals) in the influent to POTWs served by a combined sewer collection network increased significantly during and immediately following a storm event. The toxic metal influent load was up to three times greater during a storm[3]. Based on these results, EPA initiated this study to obtain information to characterize priority pollutants associated with combined sewer flows and combined sewer overflows.

Because the EPA study represents the first effort to specifically assess priority pollutants in CSOs, development of a sampling protocol was needed before a full-scale investigation could be initiated. EPA's study is being conducted, therefore, in two phases: Phase I, a pilot-scale study and Phase II, a full-scale study. This report summarizes the results of the pilot-scale CSO study.

2.2 PURPOSE

The pilot study was initiated to:

1. Establish site selection and sampling criteria for conducting the full-scale study; and

2. To characterize the levels of priority pollutants in combined sewer flows, combined sewer sediments, storm runoff, and combined sewer overflows.

2.3 SCOPE

The scope of the pilot study included:

1. Selecting sample sites within two sewerage systems.

2. Sampling the dry weather influent to the POTWs or to the appropriate regulator chamber that receives wastewater from the selected catchment areas.

3. Collecting sediment samples that accumulate in the collection system tributary to the selected regulator locations.

4. Collecting samples of the combined sewer flow, storm runoff, rainfall, combined sewer overflow, and "first flush" discharges.

5. Shipping samples to EPA-designated laboratories for toxic pollutant analyses.

6. Analyzing samples for selected conventional and nonconventional pollutants.

7. Characterizing the drainage areas served by the selected sample locations (e.g., determining land use, imperviousness, and related factors).

8. Evaluating various techniques for wastewater and rainfall sample collection, rainfall measurement, and flow monitoring.

9. Evaluating results of conventional, nonconventional, and priority pollutant analyses.

10. Preparing a final report summarizing the project activities.

The sewerage systems selected for sampling during the pilot-scale study were located in the New York City Metropolitan area to facilitate access to the EPA's Storm and Combined Sewer Section (SCSS) in Edison, New Jersey.

SECTION 3
SITE SELECTION

3.1 CRITERIA

To accomplish the objectives of this study, specific criteria were established for selecting study areas. These criteria included:

1. Combined sewers should serve most, if not all, of the study area.

2. Each selected catchment area should have well-defined boundaries.

3. Each catchment area should have a minimum number of regulating chambers; areas served by one regulator should receive priority.

4. The sewerage system, including the regulator chambers, should be well-operated and in good condition.

5. The sewerage system should be accessible at specified sampling points.

6. Sample locations should facilitate evaluations of various flow monitoring and sample collection techniques.

7. Area land use should enhance the objectives of the study (i.e., populated versus vacant areas) and should include industrial development.

8. General information on an area's land use, industrial dischargers, slopes, and sewer characteristics should be readily available.

9. The municipality should be willing to participate in the study.

3.2 SEWERAGE SYSTEMS INSPECTED

Available information on the combined sewer systems located in the New York Metropolitan area was reviewed to identify sewerage systems that would be suitable for sampling during the pilot-scale study. This information included the EPA's 1978 Needs Survey, an EPA SCSS report "Combined Sewer Overflow Study for the Hudson River Conference" (January 1973), and other data obtained from the personnel at SCSS. Based on this review, four potential study areas, each tributary to one of the following pollution control facilities, were selected: the 26th Ward Wastewater Pollution Control Plant, Brooklyn, New York; the City of Elizabeth Wastewater Treatment Plant, Elizabeth, New Jersey; Passaic Valley Wastewater Treatment Facility, Newark, New Jersey; and the Hoboken Wastewater Treatment Plant, Hoboken, New Jersey.

Based on the criteria listed in Section 3.1 and the results of the field reconnaissance visits to inspect potential sampling locations in each of the four cities, catchment areas tributary to the Passaic Valley Wastewater Treatment Facility (Newark, New Jersey) and the 26th Ward Wastewater Pollution Control Plant (Brooklyn, New York) were identified as the primary drainage areas to be sampled. Catchment areas tributary to the Hoboken Wastewater Treatment Plant were eliminated because of inadequate sampling locations and the poor conditions of the overflow regulators, conditions that would not be conducive to the requirements of the sampling program. Sampling catchment areas within the Elizabeth city limits were not pursued because of unreasonable indemnification requirements specified by the city.

SECTION 4

DESCRIPTION OF SELECTED STUDY AREAS

4.1 26TH WARD DRAINAGE AREA - BROOKLYN, NEW YORK[5]

The estimated 6,000 acres included in this drainage district are bordered by Brooklyn, Queens, and Jamaica Bay. The land is generally low and flat with a hilly section along the northern border; elevations range from sea level at Jamaica Bay to approximately 150 feet above sea level near the top of the steeper section. The drainage area averages slightly over 43 inches of precipitation per year.

Land is used primarily for residential purposes though industrial sections have been developed at Broadway Junction, Flatland Industrial Park, Spring Creek Industrial Park, and along Atlantic Avenue. Large tracts of vacant land are also present, including cemetaries and parklands to the north, marshland along Jamaica Bay, and a sanitary landfill in the Spring Creek area. Housing and other neighborhood characteristics vary widely. Older areas range from the well-maintained communities of Cypress Hills, Highland Park, and City Line to the abandoned buildings and poorly-maintained structures in East New York and Brownsville. Recently constructed public housing projects are located throughout the area.

A combined sewer collection system serves all of the study area except Starrett City, the Spring Creek urban renewal area, and the proposed Gateway National Park. Sewer diameters range from 12 inches to a combined 252-inch triple-barrel sewer. The combined sewerage system consists of approximately 20 miles of sewer at least 48 inches in diameter and 160 miles of sewer less than 48 inches in diameter. Many of the larger sewers are constructed of plain or reinforced monolithic concrete, with brick or vitrified clay liner plates; small sewers are predominantly vitrified clay. Pipe joints throughout the system consist of caulked hemp or oakum and cement, though new pipes have rubber gasket or bitumastic joints. Sewer shapes include rectangular pipes with V-shaped inverts; circular or flat pipes; semi-circular or U-shaped; or one of the many old conduit shapes (e.g., banked handle, catenary, egg-shaped, horseshoe).

To minimize the pollutant levels from combined sewer overflows during storms, the City of New York has proposed an Auxiliary Water Pollution Control Plant program, projected to provide six storm overflow treatment facilities. The first and only operating control plant, the Spring Creek Plant, is designed to control storm water overflow to Jamaica Bay. The plant, located in the 26th Ward drainage area, consists of six 50-feet by 476-feet contact basins and an operations building. It captures sediment material washed from city streets as well as settled material scoured from

the sewers at the beginning of storms. Runoff from minor storms is retained at the Spring Creek Plant and pumped to the 26th Ward Treatment Facility during dry weather periods; short-term settling and disinfection is provided for combined sewer overflows during larger storms. Unrestricted flow enters the basins through four 10x14-foot extensions of the Autumn Avenue sewer from the north and two 10x15-foot extensions of the Queens sewer from the east. Chlorination is generally practiced from May 15th through September 30th.

The Spring Creek Auxiliary Plant was considered as an excellent layout for sampling as part of the CSO pilot study. The plant would provide a simulated laboratory model for monitoring combined sewer flows, overflows, and the effects of sedimentation. Unfortunately, because of the complexity of identifying the source of the influent waste stream and of the current operational mode at the plant (detention basins are not routinely "bled" back into the system during dry weather conditions), it was not practical to monitor this location. Alternative catchment areas not tributary to the Spring Creek facility were sought. The overflow regulators that were selected for sampling in the 26th Ward tributary area were located at Hendrix Street and Williams Avenue, respectively. The location of the catchment areas are shown in Figure 4.1.

Hendrix Street Regulator Chamber

The Hendrix Creek drainage area is long, narrow, and approximately 492 acres in area. Figures 4.2 and 4.3 present the Hendrix Creek catchment boundaries and regulator diversion plan view, respectively. The land use in the catchment area is predominately multi-family residential development with a mix of commercial establishments. The sampling station throughout this program was located on the 26th Ward Treatment Plant premises. The existing diversion weir (41 feet long) was available for flow monitoring overflow events.

Flow through the regulator chamber may be controlled by throttling either the main tide gate at the 26th Ward Treatment Plant or the sluice gate at the regulator chamber. During a typical storm, when the combined sewer flow reaches a predetermined level, the regulator gate is throttled (closed), thus reducing the flow to the treatment plant. As the flow rises in the regulating chamber above the freeboard of the overflow weir, combined sewage passes through a series of tide gates and then discharges to Hendrix Creek. Due to the size of the drainage area and the low hydraulic capacity of the interceptor to the treatment plant, this regulator is sensitive to overflow.

Williams Avenue Regulator Chamber

The drainage area tributary to the Williams Avenue regulator (also referred to as the Fresh Creek catchment area) is approximately twice as large in area as the Hendrix Street drainage area. Figure 4.4 presents the tributary area boundary. This predominately residential (multi-family apartment dwellings) and commercial land use area borders the Hendrix Street catchment area.

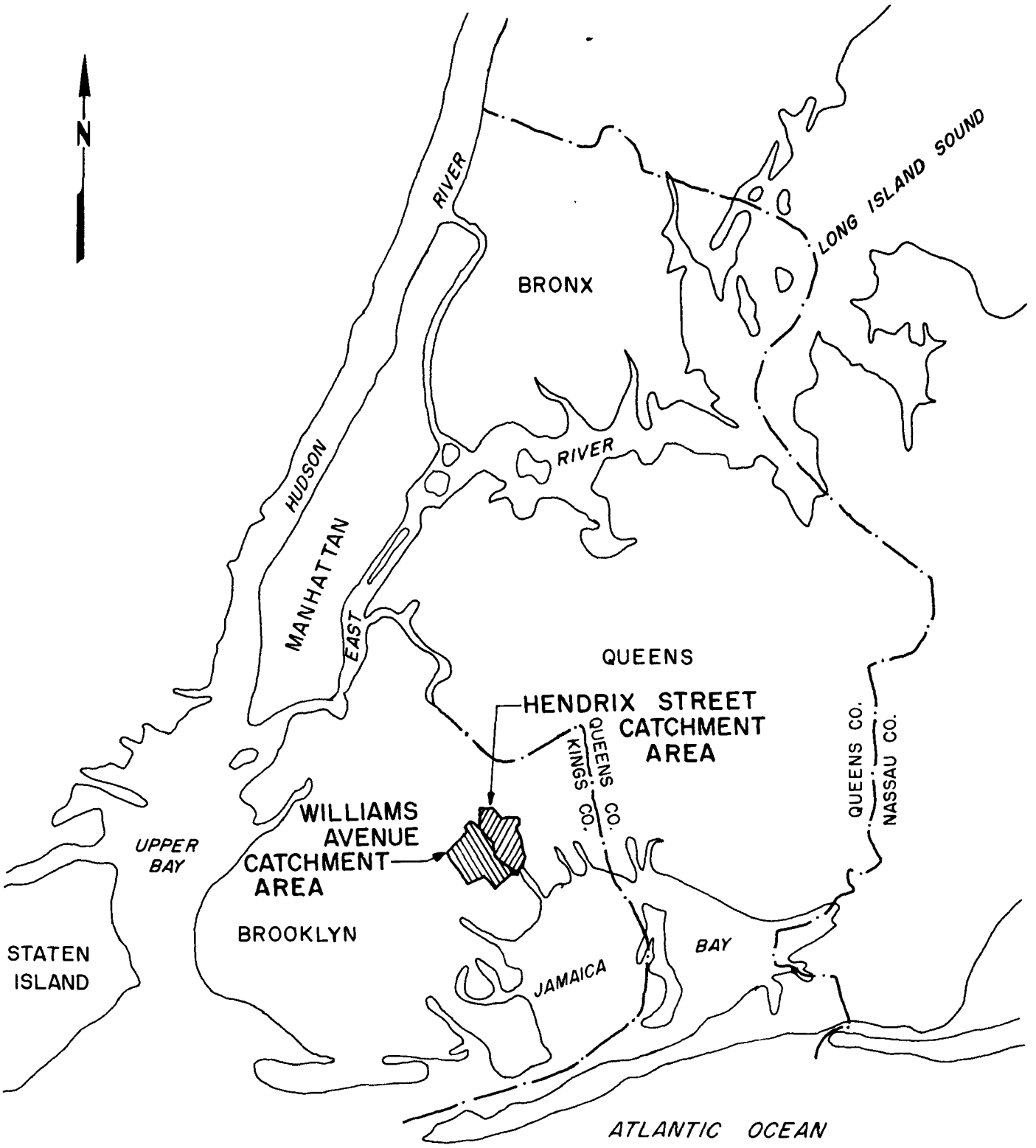

FIGURE 4.1 LOCATION OF THE HENDRIX STREET AND WILLIAMS AVENUE CATCHMENT AREAS

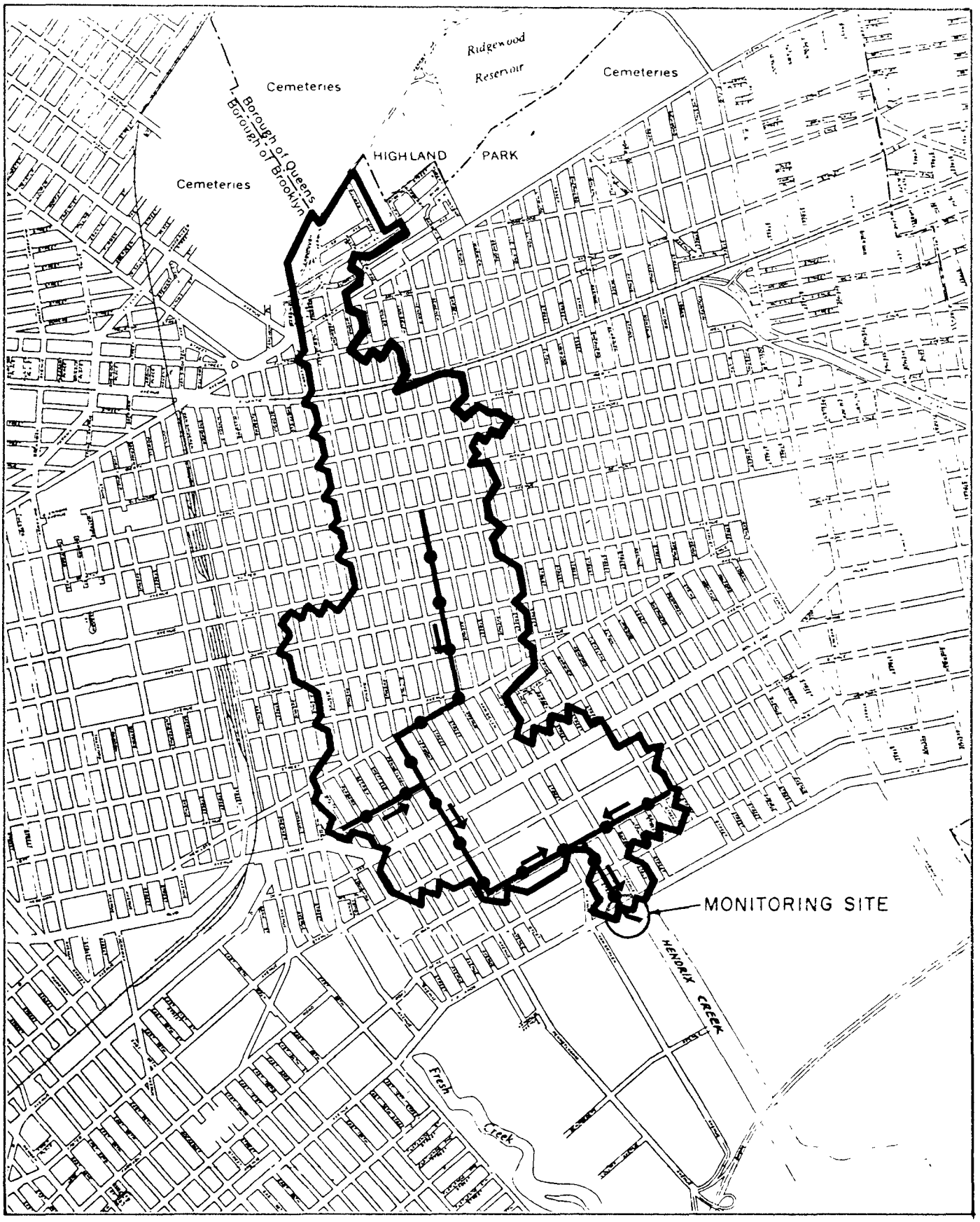

0 1000 2000 4000 FEET

INTERCEPTOR & FLOW DIRECTION

FIGURE 4.2
HENDRIX CREEK COMBINED SEWER DRAINAGE AREA

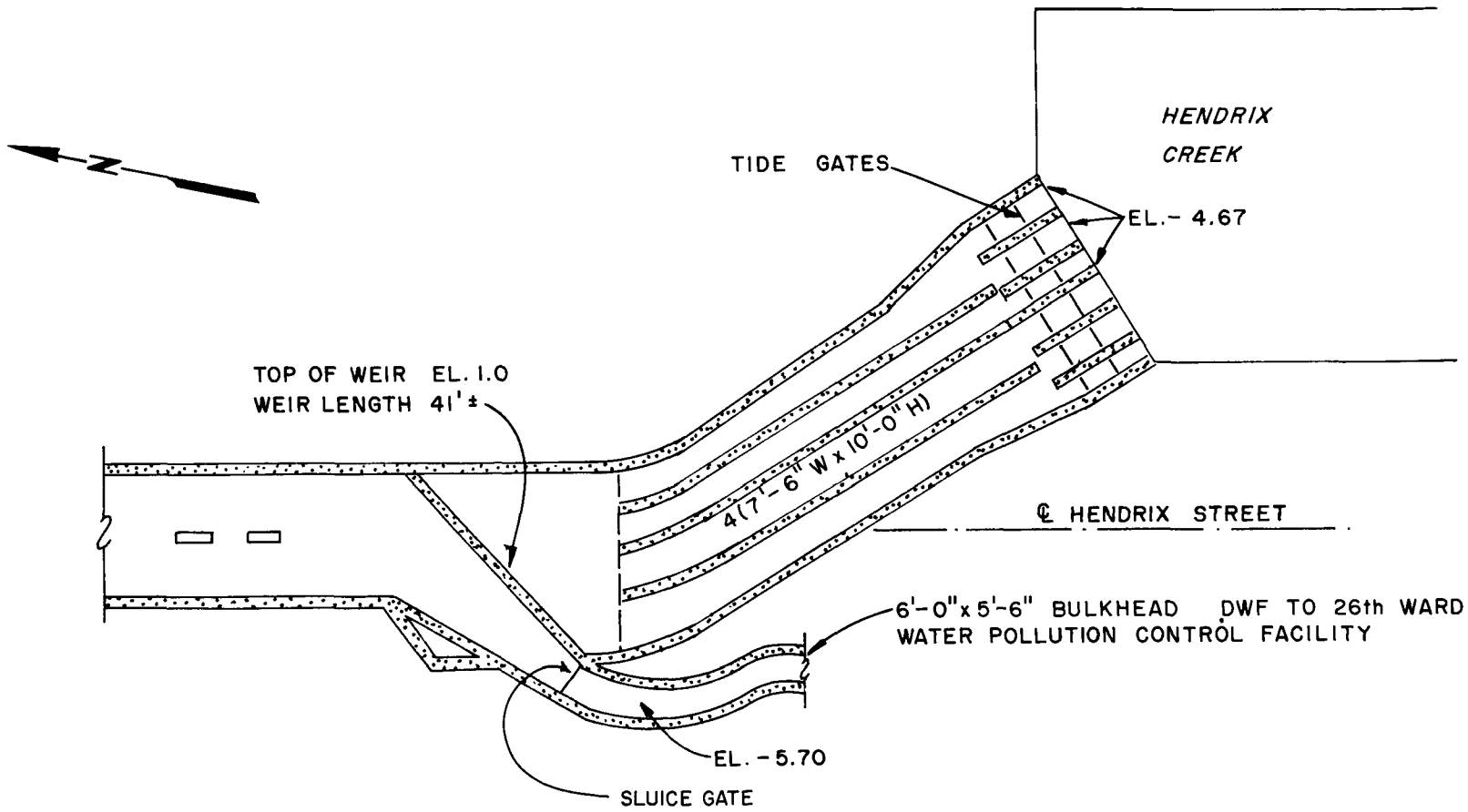

FIGURE 4.3 HENDRIX STREET REGULATOR
PLAN VIEW

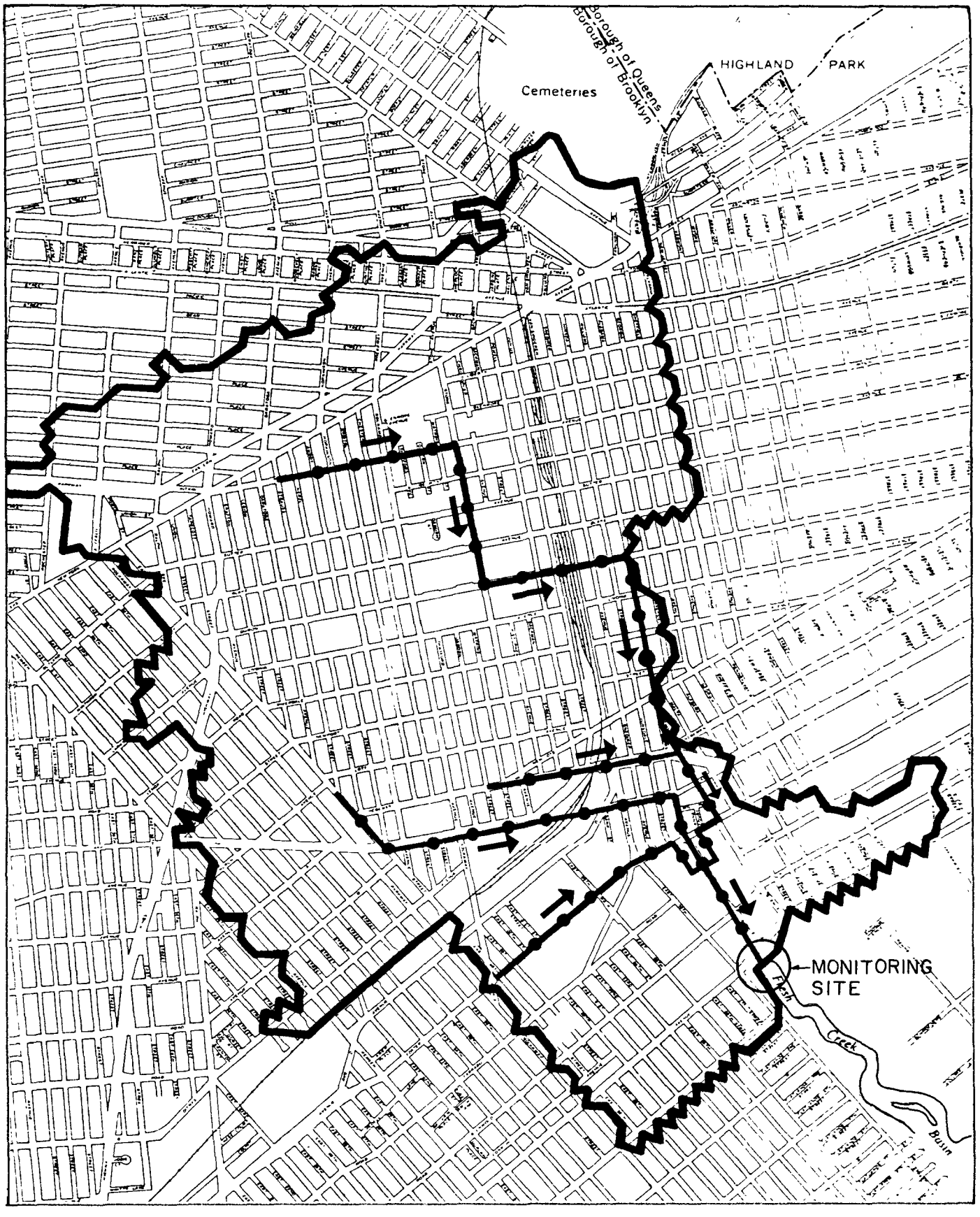

0 1000 2000 4000 FEET

INTERCEPTOR
FLOW DIRECTION

FIGURE 4.4
WILLIAMS AVENUE COMBINED SEWER DRAINAGE AREA

Due to the larger catchment area, the regulator structure is very sensitive to overflow during wet weather conditions. The regulator diversion functions similarly to the Hendrix regulator. Once the level of the flow reaches a predetermined elevation in the regulator chamber, the regulator gate is closed, thus regulating the flow to the treatment plant. The elevation of the combined sewer flow rises quickly at this point until the flow cascades over the existing weir diversion. The overflow then passes through a series of tide gates before discharging to Fresh Creek. The diversion weir is 12 feet long at an elevation of 3.7 feet above mean sea level. This low elevation presented difficulties in monitoring flow rates when overflow conditions occurred during high tide periods. Figure 4.5 presents the plan view of the Williams Avenue regulator structure.

4.2 PASSAIC VALLEY DRAINAGE AREA - NEWARK, NEW JERSEY[6]

The Passaic Valley Sewage Commission (PVSC), located in Newark, New Jersey, serves 30 communities in the northeastern New Jersey area (see Figure 4.6). The City of Newark covers approximately 15,360 acres with an average elevation of 55 feet above sea level. The population of Newark is an estimated 310,000, although during the business day the estimated population swells to over two million. The Newark area receives an average of 40 inches of precipitation per year.

Land is used for both residential and industrial purposes. More than 5,000 industries are served by the PVSC sewage collection system, including leather, jewelry, malt liquor, electrical equipment, auto parts, chemical, and plastic manufacturers as well as several major educational facilities. Approximately 260 million gallons per day (mgd) of sewage is currently treated at the PVSC plant; this is expected to increase to 300 mgd by the year 2000, with a peak daily capacity of 680 mgd.

Ten of the 15 overflow points within Newark's collection system have recently been renovated to allow remote control of the regulator gates from the main sewage treatment plant. To alleviate surcharge conditions at the treatment plant, the regulator at the Clay Street location is opened first and excess combined sewer flow is allowed to overflow to Newark Bay. If surcharge conditions persist, the remaining nine regulators are then opened. When flow at any one of the regulators backs up to a level higher than the regulator stop logs, overflow occurs. This arrangement affords maximum usage of in-line storage.

After in-depth field investigations, regulator locations at Herbert Place, Rector Street, and Saybrook Place were selected for sampling during the pilot study. The Herbert Place drainage area is shown in Figure 4.7 and the Rector Street and Saybrook drainage areas are shown in Figure 4.8. Each of these regulators (illustrated in Figures 4.9, 4.10, and 4.11, respectively) receives flow from separate, well-defined catchment areas within Newark.

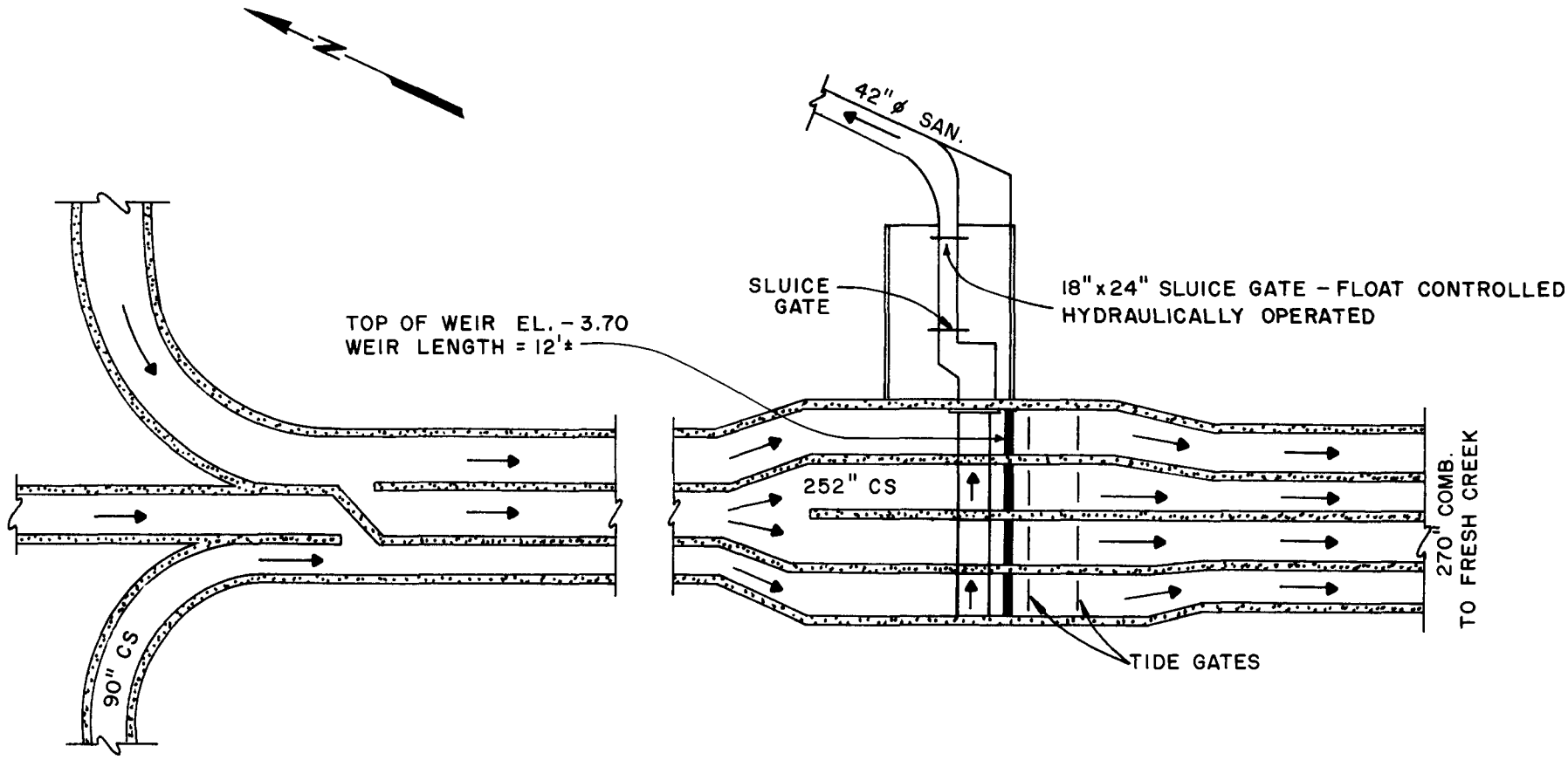

FIGURE 4.5 WILLIAMS AVENUE REGULATOR
PLAN VIEW

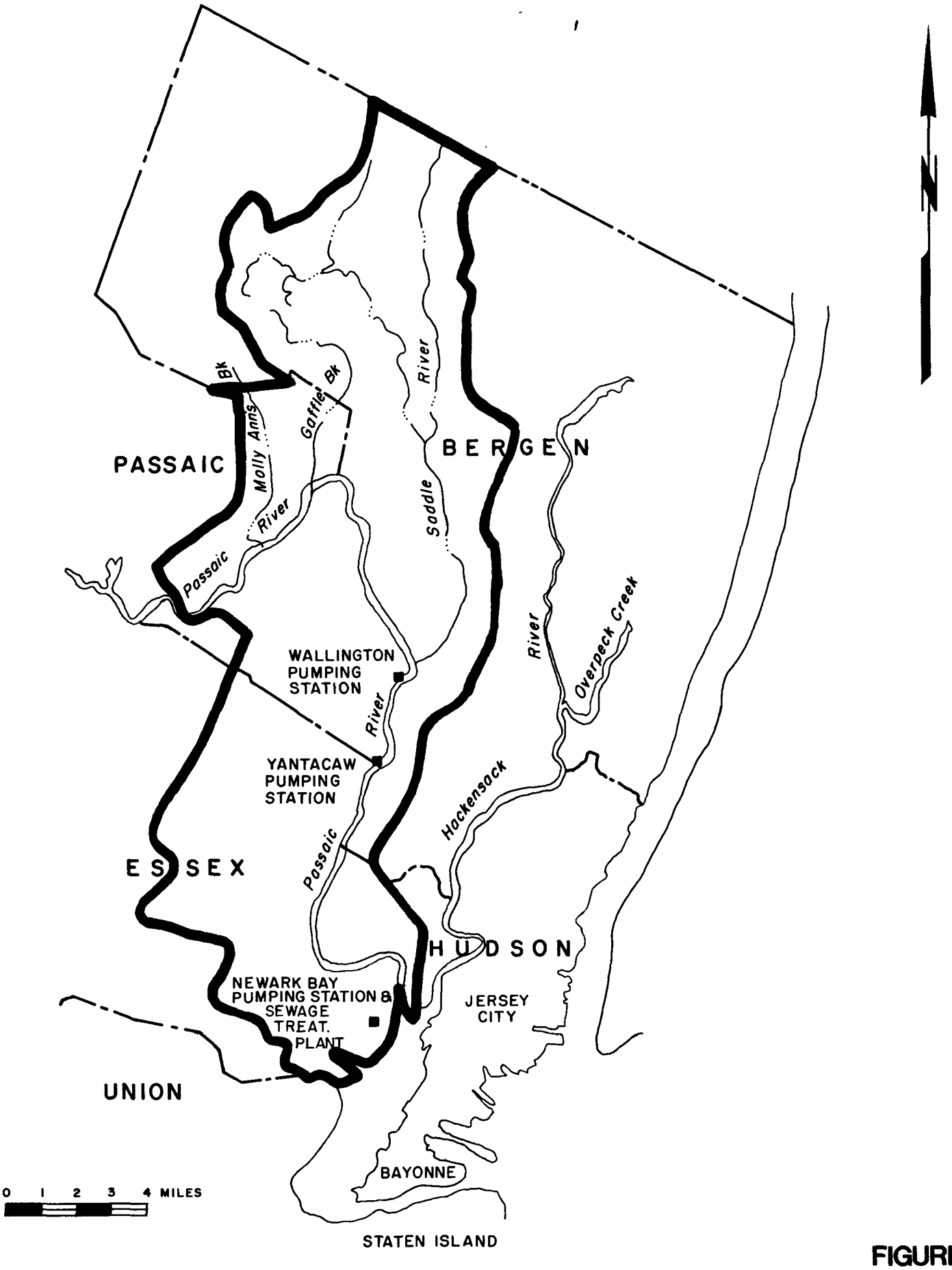

FIGURE 4.6
DRAINAGE AREA TRIBUTARY TO THE PASSAIC VALLEY SEWAGE TREATMENT FACILITY

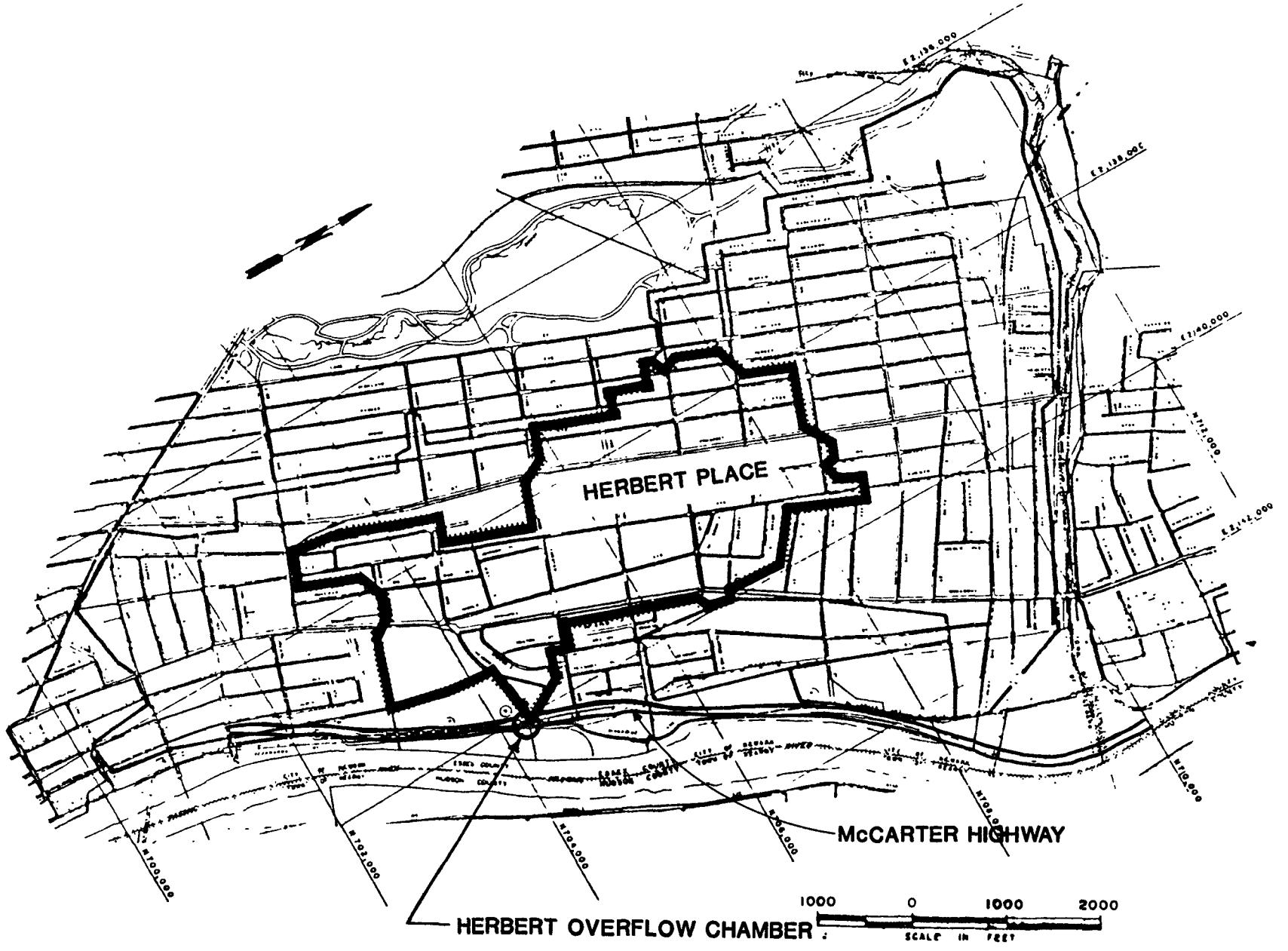

FIGURE 4.7
HERBERT PLACE DRAINAGE AREA
NEWARK, NEW JERSEY

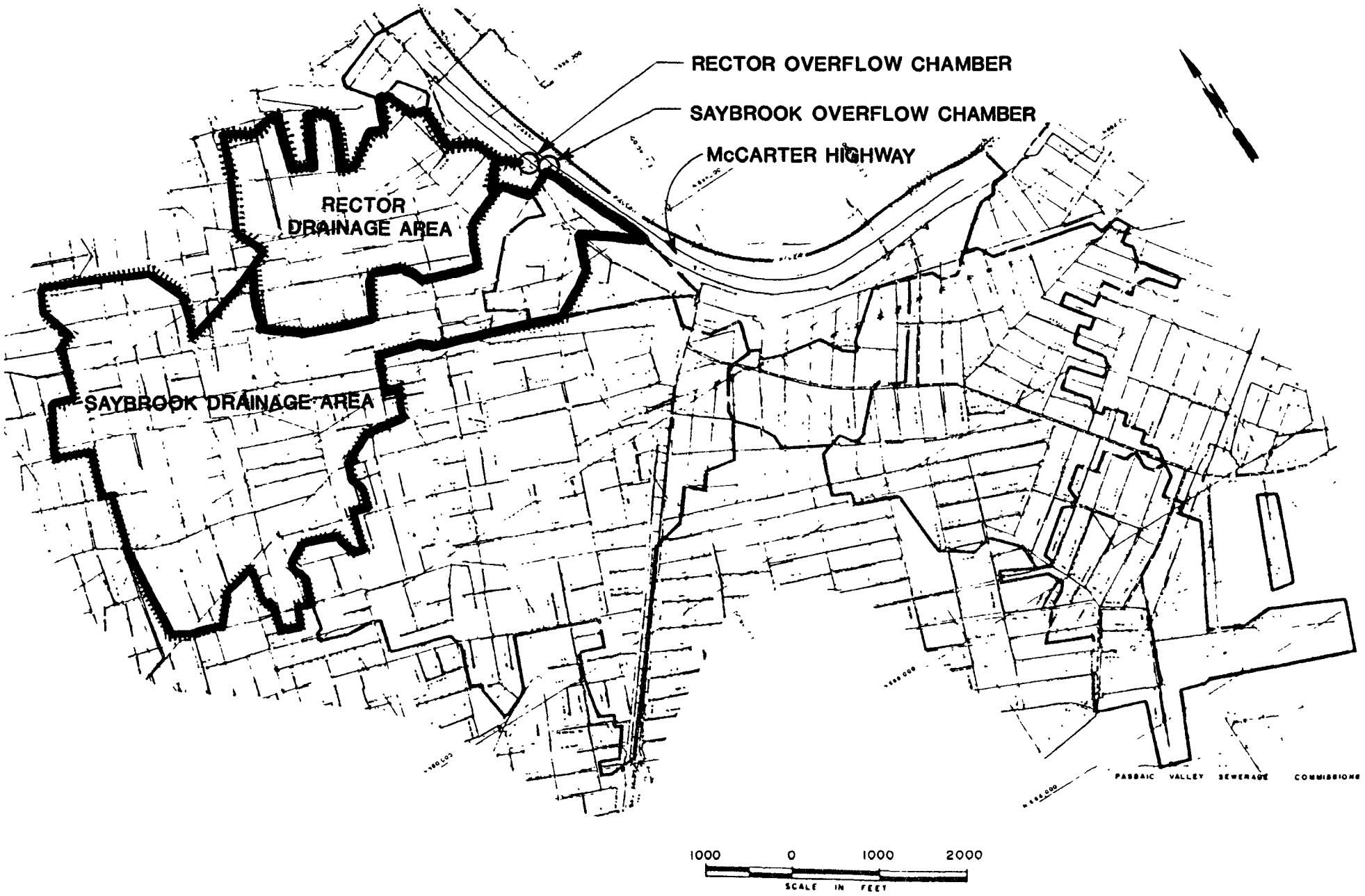

FIGURE 4.8
RECTOR STREET & SAYBROOK PLACE DRAINAGE AREA
NEWARK, NEW JERSEY

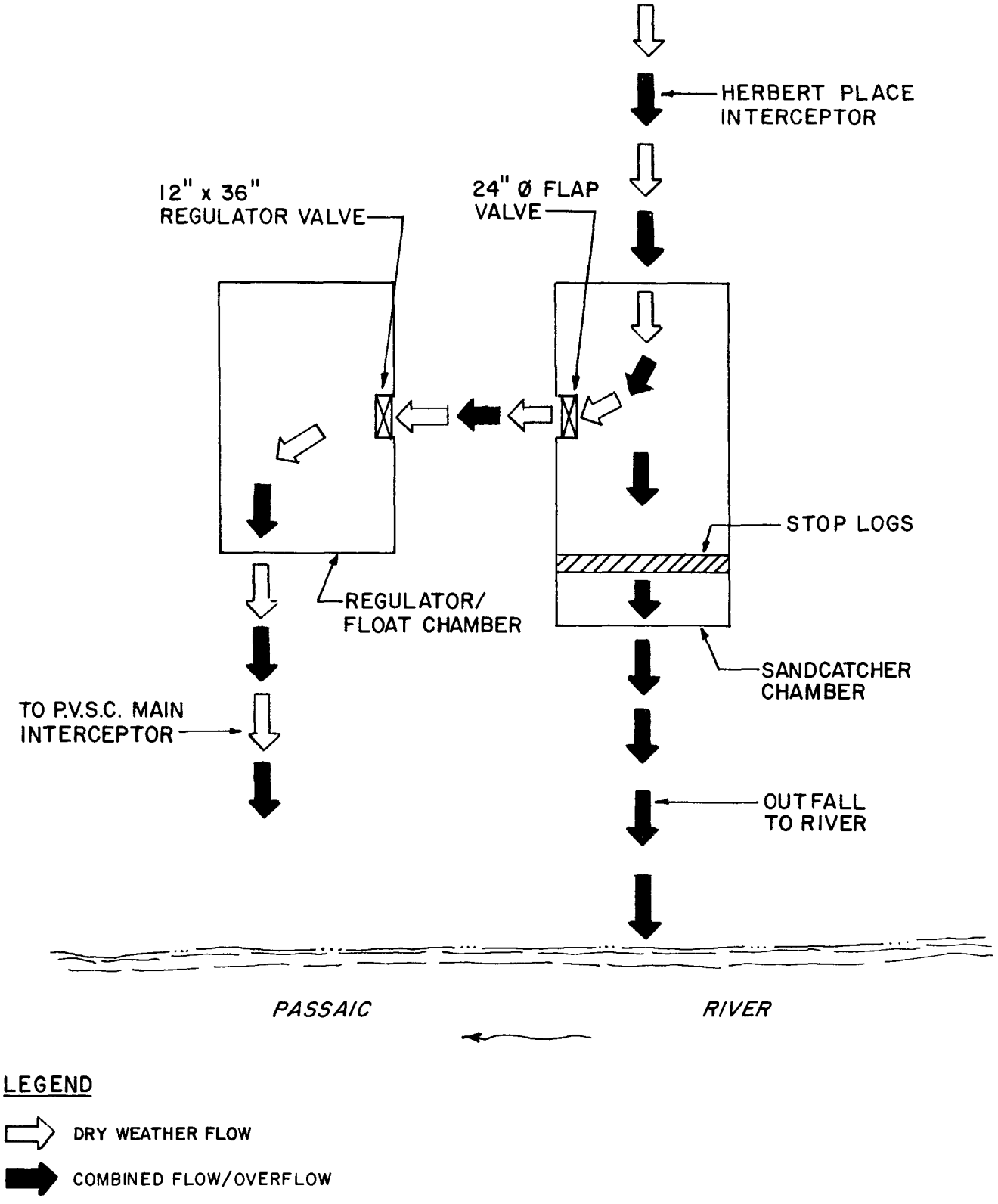

FIGURE 4.9
SCHEMATIC OF HERBERT PLACE REGULATOR CHAMBER

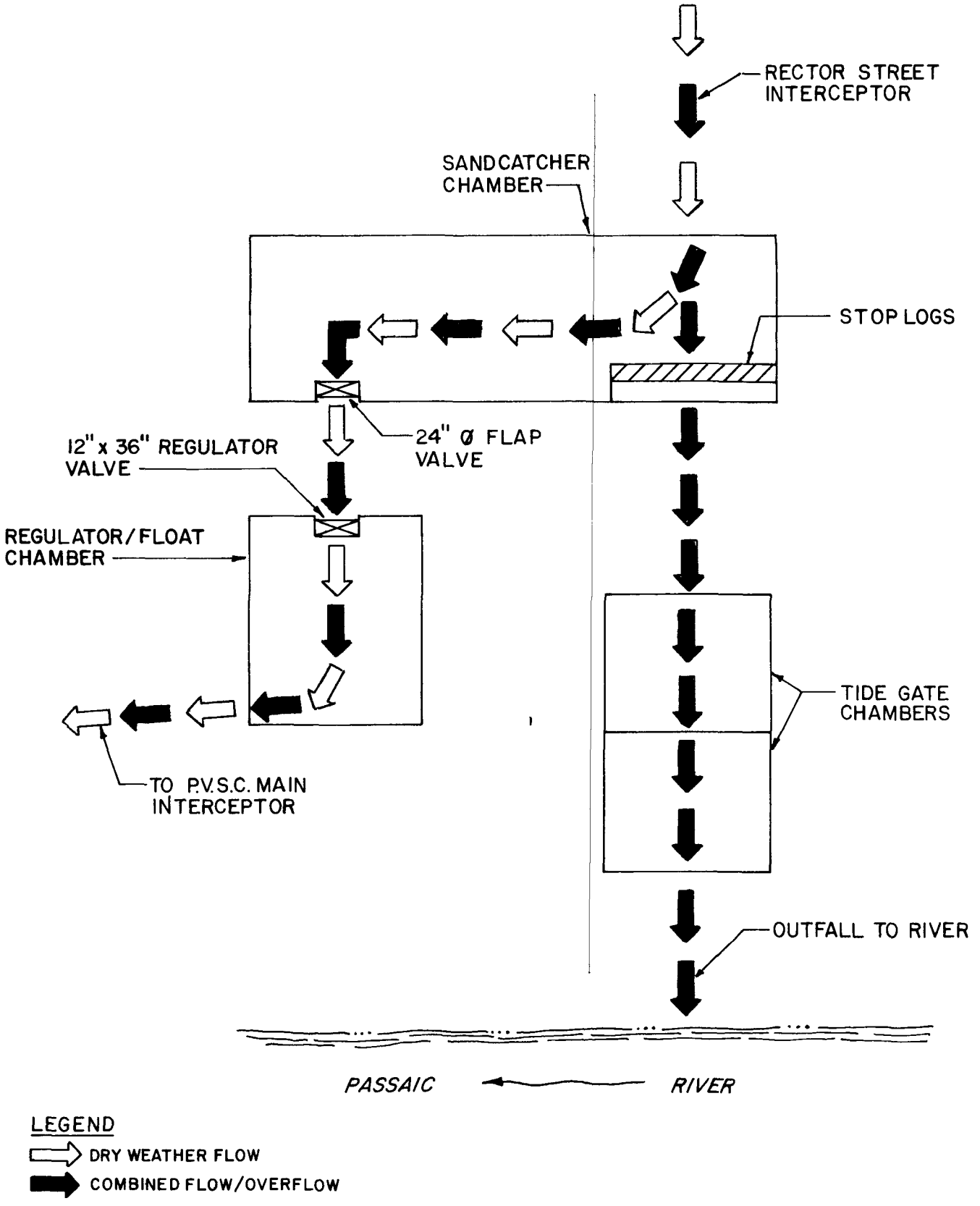

FIGURE 4.10
SCHEMATIC OF RECTOR STREET REGULATOR CHAMBER

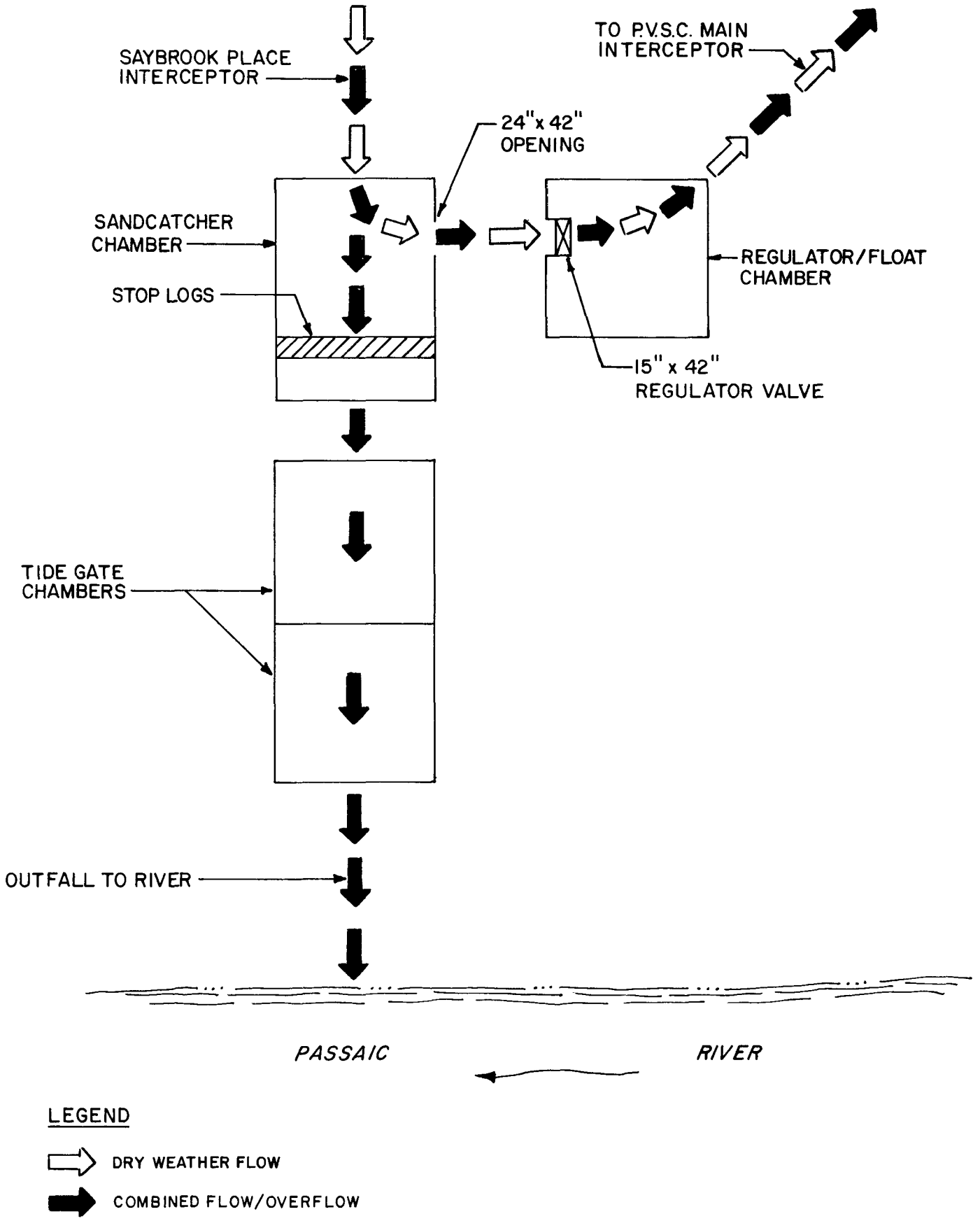

FIGURE 4.11
SCHEMATIC OF SAYBROOK PLACE REGULATOR CHAMBER

Herbert Place Overflow Chamber

This chamber is located at the southwest corner of the Chester Avenue exit off McCarter Highway at an elevation sufficiently above the Passaic River to eliminate tidal influences on the chamber performance. The chamber serves a 298-acre predominately residential and commercial area that includes 47,000 linear feet of combined sewers as listed below:

- 38,000 feet with eight- to 24-inch diameter
- 1,000 feet with 27- to 36-inch diameter
- 3,000 feet with 36- to 54-inch diameter
- 5,000 feet of egg, oval, and rectangular sewer with 18x27-inch to 44x66-inch diameters

Average daily seasonal dry weather flow at the chamber location is 1.20 mgd. Overflow conditions result when flows reach approximately 11.3 mgd. The overflow discharges by gravity through two 380-foot lines (72x48-inch horseshoe brick and a 51-inch circular reinforced concrete pipe) with a 2.1 percent slope to the Passaic River. The chamber is served by a 48-inch circular concrete pipe at a 3.11 percent slope.

Before flow enters the chamber, it is accessible through two upstream manholes (80 feet east of the chamber on Herbert Street and 314 feet east of the Herbert Street manhole). The invert slope between the two manholes is 2.99 percent. Under normal conditions, flow drops approximately 13 feet to the main interceptor under McCarter Highway.

Rector Street Overflow Chamber

This chamber is located at the northwest corner of an existing warehouse building on Ogden Street, south of the Rector Street and McCarter Highway intersection. Due to the low elevation, tidal gates are in place to control backwater intrusion.

The drainage area tributary to the Rector Street overflow chamber contains approximately 177 acres; 20 percent of the area is residential and the remainder is used for commercial/industrial purposes. The chamber is served by 25,600 linear feet of combined sewers as listed below:

- 11,800 feet with eight to 18-inch diameters
- 3,500 feet with 24 to 60-inch diameters
- 10,300 feet of egg, oval, and rectangular sewer with 20x30-inch to 54x66-inch diameters

The chamber is served by a 54x60-inch rectangular pipe with a 2.14 percent slope. Dry weather flow averages 1.88 mgd. Overflow conditions occur when flows reach approximately 11.00 mgd. Overflow travels by gravity through a 115-foot long by 60-inch diameter brick pipe at a 6.47 percent slope and discharge to the Passaic River.

Before flow enters the chamber, it is accessible through two upstream manholes (100 feet northwest of the chamber on McCarter Highway and 74 feet northwest of the McCarter Highway manhole). The invert slope between the

two manholes in 1.97 percent. Under normal flow condition, the flow drops approximately 19 feet to the main interceptor under McCarter Highway.

Saybrook Place Overflow Chamber

The area tributary to this chamber consists of approximately 306 acres of highly developed residential, commercial, and industrial land. The chamber is located south of an existing warehouse, east of the Saybrook Place and McCarter Highway intersection. The elevation of the chamber requires the use of well-operated tide gates to control backwater intrusion.

Approximately 56,500 linear feet of combined sewers are tributary to he chamber:

- 27,000 feet with six to 18-inch diameters
- 6,000 feet with 30 to 60-inch diameters
- 3,500 feet with 72 to 105-inch diameters
- 20,000 feet of egg, oval, and rectangular shape sewer with 20x30-inch to 30x70-inch diameters

The chamber receives an average daily seasonal dry weather flow of 4.8 mgd. Two interceptors are tributary to the chamber: a 48-inch brick pipe flowing northeast on McCarter Highway enters at a 3.97 percent slope; and a 90x80-inch pipe flowing northeast on Saybrook Place enters at a 1.48 percent slope. Flow is accessible at manholes on both interceptors.

SECTION 5
SAMPLING PROGRAM

5.1 INTRODUCTION

To determine the mass and source of priority pollutants in combined sewer flows and overflows and the relation of the pollutant mass to urban runoff, storm intensity, land use, industrial dischargers, and other elements, the characteristics of both dry and wet weather sewage flow must be documented. By selectively identifying sample locations tributary to drainage areas in which a mass balance framework for the respective drainage areas can be established, definite sources of priority pollutants should be identifiable. In this study, sampling methodologies were specifically developed to establish the characteristics within a tributary area for the dry weather background flow, and deposition and the wet weather precipitation, runoff, CSO, and combined wet and dry weather flow. In addition, samples were collected to assess the character and fate of any observed first flush. Detailed procedures were considered for the priority pollutant sampling during dry and wet weather conditions. These procedures were then evaluated for flexibility and accuracy.

5.2 METHODOLOGIES

5.2.1 Dry Weather Sampling

Background Sampling. The purpose of the background sampling is to document the expected base line mass loadings attributable to dry weather flow. By subtracting the respective background dry weather pollutant mass from the combined wet weather pollutant mass, the mass generated as a result of a given storm event can be calculated.

Since the background sample represents the dry weather baseline pollutant mass, the sample period and location should be chosen carefully. Collecting samples at the influent to the treatment plant provides a datum to evaluate the increase/decrease of pollutants in the influent to the POTW as a result of combined sewer flow conditions. In contrast, samples collected at the regulator locations tributary to the selected catchment areas provide a datum to assess the increase/decrease of pollutants emanating from within the defined drainage area boundaries.

The sample period duration, similar to the sample location, has an impact on the character of the background sample. Ideally, the dry weather background sample period would extend during the same day of the week and the exact time interval that the storm events occur. However, even if replicate samples were collected during the same time intervals, there is no guarantee that industrial discharge patterns will coincide from week to week.

A purpose of the pilot study was to determine which sample location should be selected for the background datum location, and further, whether the samples should be collected as a composite over an extended time period or simply as a grab sample immediately prior to the storm event. As for all samples collected throughout this program, it was critical that sample locations be situated such that well-mixed representative samples and reliable flow information be obtained. Accessibility to the sample location is likewise imperative. Extended dry weather periods should additionally precede any dry weather background sampling to minimize potential effects as a result of infiltration.

Sediment Sampling. The deposition of solids in a combined sewerage system during dry weather periods is recognized as a major contributor to the first flush phenomenon that generally occurs during the early stage of a storm event. For this reason, it is desirable to collect sediment samples during dry weather periods since they are representative of the material that may be scoured from the collection system during storm periods.

Flat sections of the large combined sewers where low velocity flows may be expected should be inspected before sampling. If this inspection proves futile, sediment sampling should be pursued further into the collection system. Of particular concern for sediment sampling is the period of antecedent dry weather conditions. A period of seven consecutive days is desirable as a minimum so that sediments from each day of the week can accumulate in the sewer.

5.2.2 Wet Weather Sampling

Precipitation Sampling. The volume, length, and intensity of a storm event are major factors influencing the volume of wastewater and the mass of pollutants discharged to receiving streams in combined sewer overflow. To adequately address the source of pollutants in combined sewers and to correlate the level of those pollutants to variables such as rainfall intensity, an indepth evaluation of precipitation patterns (e.g., volume, intensity, duration) and precipitation quality should be undertaken. Sampling and monitoring precipitation in a specific area must be tailored precisely for that catchment area. Rain gauges and collection instruments must be placed in strategic locations that will not be influenced by aerial obstructions, large buildings, pedestrian and automotive traffic, and the possibility of unstable ground support. Furthermore, the number of monitoring locations is influenced by the acreage in the collection district. Rainfall collectors should be in the center of the catchment area whenever possible, in locations not likely to be vandalized.

Rainfall collectors should be made of stainless steel, pyrex, or teflon. For this program, 2.5 gallons of rain per storm event were needed for all priority pollutant, conventional, and nonconventional analyses. The collectors must be sized accordingly (i.e., a 0.25 inch rain storm requires 16 square feet of collector area).

Precipitation may be measured by recording and nonrecording gauges as water depth with respect to time. The U.S. Weather Service standard nonrecording precipitation gauge consists of a 203-mm diameter collector with a knife-sharp edge, a receiver, an overflow chamber, and a measuring stick. Precipitation is caught in the collector and funneled into the receiver, a brass tube with a cross-sectional area one-tenth that of the collector. Precipitation accumulated in the receiver is measured with a stick graduated in millimeters. Any overflow from the receiver is held in the overflow chamber and poured into the receiver for measuring. Any time after rainfall begins, a manual measurement of the collected precipitation can be taken with the measuring stick. Figure 5.1 shows a typical nonrecording rain gauge[7].

Three types of recording precipitation gauges are commonly used: tipping bucket, float, and weighing gauges. The weighing gauge is suitable for measuring rain and snow, while the tipping bucket measures only rain. A weighing gauge is shown in Figure 5.2. Precipitation is caught in the funnel shaped collector and diverted to a bucket resting on a scale. As the weight of the catch increases, a pen moves across a recorder chart (rotated by a timer) indicating the cumulative rainfall. The chart and the spring-powered chart drive can be geared for 6, 12, 24, 48, 96, 168, and 192 hour periods. An electric chart drive is also available up to 861 hours (35.9 days). However, chart readings above 24 hours are very difficult to read at less than 15-minute intervals.

A problem associated with the use of most rain gauges is that the gauge itself causes turbulent air currents; subsequently, part of the rainfall passes the gauge in an amount that varies according to wind velocity. If possible, precipitation gauges should be protected from wind influence in all directions. If placed near trees or buildings, overhead obstructions should be at a vertical angle of at least 30 degrees (°), and not more than 40°, from the gauge. However, suitable areas protected by trees or buildings are not always available, and precipitation gauges in exposed areas should be equipped with a windshield, if possible. The U.S. Weather Service uses an alter shield as shown in Figure 5.3. However, even this cannot protect against severe winds. The alter gauge is used in more permanent gauging studies[7]. For this project, the weighing bucket recording gauge was used.

Good judgement is required to interpret observations and reduce inaccuracies caused by poor gauge exposure. For example, the measurement may be greater than the rainfall because of drip from overhead tree limbs. If the opening of a vessel is not level, the horizontal projection of the opening should be measured before the vessel is disturbed. Many containers have sloping or irregular shapes. In these instances, the catch is easily measured by pouring the contents into a calibrated container and adjusting the measured volume for the size of opening. Photographs of vessels in their undisturbed locations are helpful in evaluating the effect of surroundings and angle of the opening on the catch.

In areas of high population densities, locating rainfall collectors and rain gauges throughout the system may be difficult. Contacts with local police, fire, or municipal wastewater treatment departments may be helpful

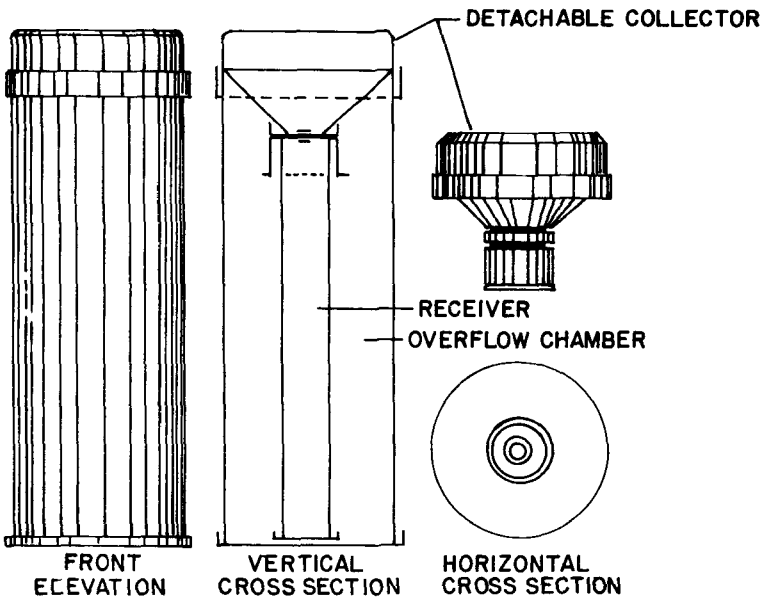

FIGURE 5.1 TYPICAL NONRECORDING PRECIPITATION GAUGE[7]

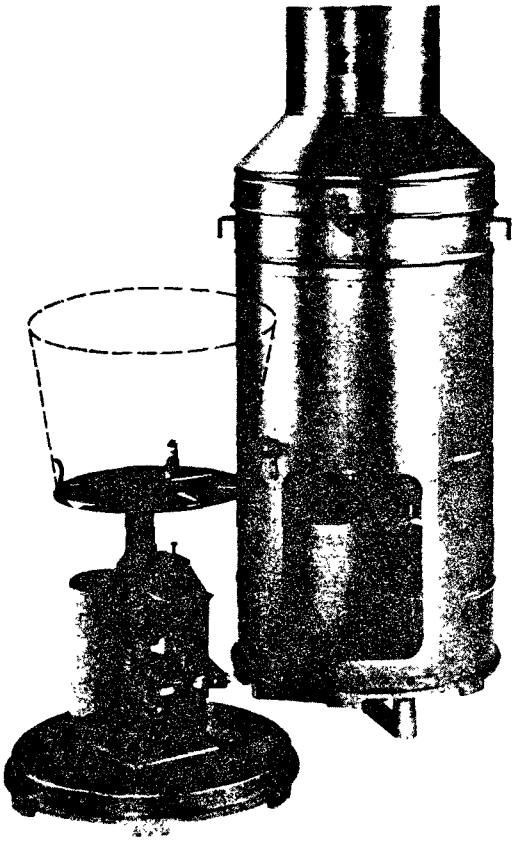

FIGURE 5.2 TYPICAL WEIGHING-TYPE RECORDING RAIN GAUGE[7]
(Courtesy of Belfort Instrument Company)

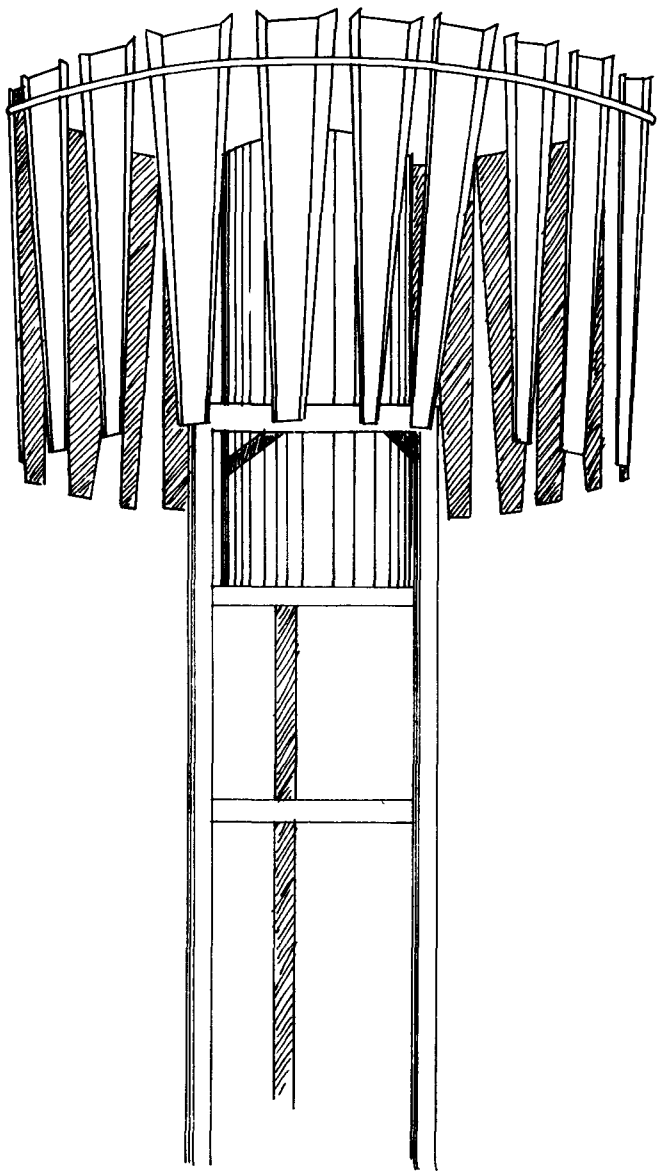

FIGURE 5.3 ALTER PRECIPITATION GAUGE[7]

in positioning the equipment on selected roofs or within a restricted area. If long-term placement of this equipment is required, a long-term maintenance schedule should be implemented. Particulate accumulation on the collector during extended dry weather periods is of concern. This accumulation, followed by a rainfall event, could cause sample contamination. Rainfall collectors must be properly cleaned prior to each sampling event. In addition, flushing the collector with deionized water and then collecting and analyzing this sample as a sampler blank allows evaluation of any contamination.

Combined Sewer Overflow Sampling. One objective of the full-scale CSO toxic pollutant study is to determine whether toxic pollutants are present in CSOs, and if so, to what degree. Various sampling techniques could be incorporated to characterize the overflow. A single grab sample, a series of random grab samples, or a series of constant volume-constant time samples that are equally composited throughout the CSO period to form a single sample could be collected. However, results from that type of sampling provide little information on the mass of pollutants discharged, which is directly dependent on the flow, as CSO. Therefore, the CSO composite sample should be a flow proportioned sample. Automatic samplers may be used to collect CSO samples that are analyzed for extractable organics, metals, and certain conventional/nonconventional pollutants. Samples that will be analyzed for volatile compounds, cyanides, and certain conventional/nonconventional pollutants must be procured as grab samples, preserved, and forwarded to the laboratory. These samples should be composited in the laboratory based on the instantaneous flow rates at the time the samples were collected.

The flow proportioned sample represents the overall character of the combined wastewater/storm water discharged in the CSO. The sample collection period should extend only during overflow periods. It is important for the sample location to yield a quality sample representive of the CSO. Sample locations should avoid zones of insufficient mixing and surcharging. Access to the regulator chamber and/or overflow line is necessary to properly sample and monitor the flow of the CSO. Entrance to the sewerage system during storm flow conditions is extremely dangerous and should be avoided. Arrangements should be made to collect all samples from street elevation, if possible.

A last consideration for CSO sampling is that of the regulator chamber arrangement. The regulator chamber or diversion structure may be mechanically operated or a static control structure may exist (horizontal or vertical orifices, leaping weirs). If the drainage area is situated along the river or lake that receives the CSO, tide or flood gates may be installed to prevent the inflow of extraneous waters to the collection system. For each situation, a different flow monitoring and/or sampling methodology may be required. A static regulator chamber located upstream of any tidal and/or flood influence is better for obtaining accurate flow data and representative samples than a mechanically operated regulator chamber situated in series with several tide gates. In the absence of tidal or flood gates, static regulators avoid potential surcharge conditions and "throttling" effects that may induce questionable flow monitoring and/or sample quality results. Though the regulator layout should be justly considered, other

criteria of the sampling program (such as land use, industries tributary to the regulator, etc.) must be weighed accordingly.

Combined Sewer Flow Sampling. Secondary to documenting whether toxic pollutants are present in CSOs is the task of identifying the source of priority pollutants emanating from the selected drainage areas and the fate of these pollutants. The first stream that should be monitored is the combined sanitary and storm water flow prior to the flow being diverted to the POTW or to the receiving waters as CSO. The mass of pollutants in this combined sewer flow (CSF) stream represents a total inventory of the pollutants that may be present in precipitation, runoff, dry weather sediments scoured by high velocities, and dry weather wastewater flow. The difference between the CSF and the CSO mass loads represents the mass discharge to a POTW. Thus the fate of toxic pollutants may be assessed by monitoring the CSF and CSO lines simultaneously.

The CSF composite should be collected from the start of the storm event and extend throughout the storm period and finally terminate when the flow again recedes to approximately the anticipated dry weather level. CSF sampling techniques must be selected to assure, to the extent feasible, that samples are representative of the character of the wastewater throughout the storm event. With few exceptions, samples must be procured in a flow proportioned manner. CSF and CSO samples may be drawn from the exact same sample location, assuming stratified flow patterns do not exist at the regulator chamber. Sample locations must be carefully selected and field inspections conducted prior to the sampling episode to assure the sites are suitable for sampling. Grab sample schedules and sampling techniques for the CSF should be the same as those for CSO.

Runoff Sampling. One source of water pollution in urban areas is that of runoff. Runoff may contain a number of pollutants including suspended solids, heavy metals, bacteria, oxygen-consuming matter, nitrogen, phosphorus, oil and grease, and associated polynuclear aromatic hydrocarbons (PAH). The quality of runoff is affected by air pollution, littered and dirty streets and sidewalks, traffic byproducts, corrosion, hazardous spill materials, chemicals applied as fertilizers, deicing agents, insecticides, and herbicides. The quantity of urban runoff that may originate in a defined catchment area is also important. Highly impervious areas can generate large volumes of runoff at velocities that may transport material from the catchment area and scour the sewerage collection network of any accumulated deposition. For these reasons, the quality and quantity of urban runoff is of special interest in attempting to identify sources of toxic pollutants that may ultimately be discharged in the CSO.

The mass of pollutants attributed to storm water runoff for a given catchment area is highly variable. Factors that contribute to the overall pollutant mass are: the length of antecedent dry weather periods; the volume, duration and intensity of a storm event; the size, shape, land use, surface composition, and slope of the catchment area; the industrial activities and traffic volume in the drainage area; and pollutant control technologies used such as street cleaning.

Characterizing urban runoff is an impossible undertaking unless runoff samples are obtained before the flow enters the collection system. The first task to be addressed involves identifying a representative runoff location for sampling. As mentioned previously, the quality and quantity of runoff is expected to differ immensely among catchment areas.

Runoff samples should be collected as the storm water cascades into the selected inlet structure or from the gutter adjacent to the inlet structure, assuming that a well-mixed flowing stream exists. If automatic samplers are selected for composite sampling, rigid conduit or its equivalent must be incorporated to position the sampler inlet tubing into the waste stream. Manual compositing may be performed by using a intermediate pyrex, stainless steel or teflon container to obtain the samples. Samples are more representative if composited in a flow proportioned manner.

First Flush Analysis. Throughout this study, the term "first flush" applies to the portion of a rainfall event that scours pollutants accumulated in the streets, gutters, catch basins, and sewer lines during dry weather conditions. During the "first flush" period, the mass of pollutants significantly increases in the combined sewer flow.

The "first flush" phenomenon provides much information on the nature, source, mass, fate, and treatability of wet weather discharges. "First flush" occurrences, duration, and intensity depend on a number of factors. The type of rainfall event (intensity, volume, spatial distribution, time distribution), the watershed characteristics (shape, size, slope, and time of concentration of the drainage area), sewer system characteristics (slope, hydraulic capacity, and in-line storage capacity) and catchment area management techniques (sewer, catch basin and street cleaning practices) all have a direct impact on the "first flush." For instance, little if any evidence of a first flush may be observed if a long duration-low intensity storm event does not result in any significant increase in runoff or CSF velocities. In contrast, short duration-high intensity storm events may yield a very pronounced first flush as a result of high runoff or CSF velocities that scour the pollutants from the drainage areas and sewers.

During a rainfall event, the rain first wets the land surface, then fills the depression storage areas, and finally results in runoff. The first rain most likely dissolves the available soluble pollutants. As the storm event progresses, surface runoff begins, carrying with it dissolved material. The suspended solids and settleable solids are later transported by the runoff in that order. Of course, this may not be true during thundershowers where the rainfall intensity at the beginning of a storm may be such that resulting runoff may concurrently carry suspended and settleable matter into the sewerage system at the same time. Therefore, the type and sequence of solids that appear during the first flush period from surface runoff depends primarily on pollutant availability and rainfall intensity.

The ratio of concentrations of the total volatile suspended solids to total suspended solids (TVSS/TSS) provides an indication of the types of pollutants in the "first flush". Generally, high organic suspended solids mass, identified by a high TVSS/TSS ratio, occurs during the early stages

of a storm event (when the flow increase is very small). The organic matter is suspected to originate from the colloidal material accumulated in catchbasins and the sewer lines. Suspended and settleable materials from the catchment area are expected to occur later during the higher runoff period.

As discussed above, the "first flush" event is site-specific and must be evaluated in detail at each separate sampling location based on the factors listed above. The first step in analyzing this flushing period is to determine what constitutes a first flush. Does a given increase in the flow rate, or decrease in the solids content, temperature, or conductivity define the "first flush" period? The wastewater flow or concentration of any one pollutant may provide much information on the character of the "first flush" period. However, it is important to note that the mass flux of pollutants is the variable of concern in discussing the first flush period.

The advantages and disadvantages of the use of indicator pollutants to define the first flush period were considered. Lead, for instance, may provide a perspective of the first flush period. However, the cost and time required to perform the lead analysis is not responsive to the objectives of this study since in-situ determinations are required so that samples can be composited immediately. The first flush period must be defined within a short period of time (six to eight hour period at maximum) because of the limited holding time for certain organic priority pollutant samples. The indicator parameters that were evaluated in detail during the pilot study were total solids (TS), total suspended solids (TSS), and settleable solids (SS). The use of temperature and conductivity measurements to define the "first flush" period was not evaluated during the pilot study. However, a brief discussion of these in-situ measurments is presented in Section 5.3.

5.3 PILOT STUDY EVALUATIONS

Background Sampling

A seven-day, 24-hour background sampling program was conducted at the 26th Ward Facility. By sampling for seven consecutive days, a dry weather datum point was established for each day of the week. The influent to the 26th Ward treatment plant was selected as the dry weather background sample location. Because of the physical constraints at the head of the treatment plant, the influent could not be sampled prior to combining with the gravity thickener overflow and digested sludge recycle lines. Adequate characterization of the influent required, therefore, sampling each recycle line as well as the influent. In addition to these sample locations, the low level wet well (Williams Avenue and Spring Creek drainage areas) and high level wet well (Hendrix Street drainage area) locations at the influent to the treatment plant were sampled. Figure 5.4 shows the sample locations and a plan view of the interceptors tributary to the 26th Ward treatment plant. Sampling commenced on April 24, 1981, and was completed on April 30, 1981. An antecedent dry weather period of 12 days preceded the sampling episode.

The dry weather sampling conducted at the 26th Ward treatment plant provides a baseline data base for the total pollutant influent mass to the plant. It does not, however, directly represent the baseline pollutant mass

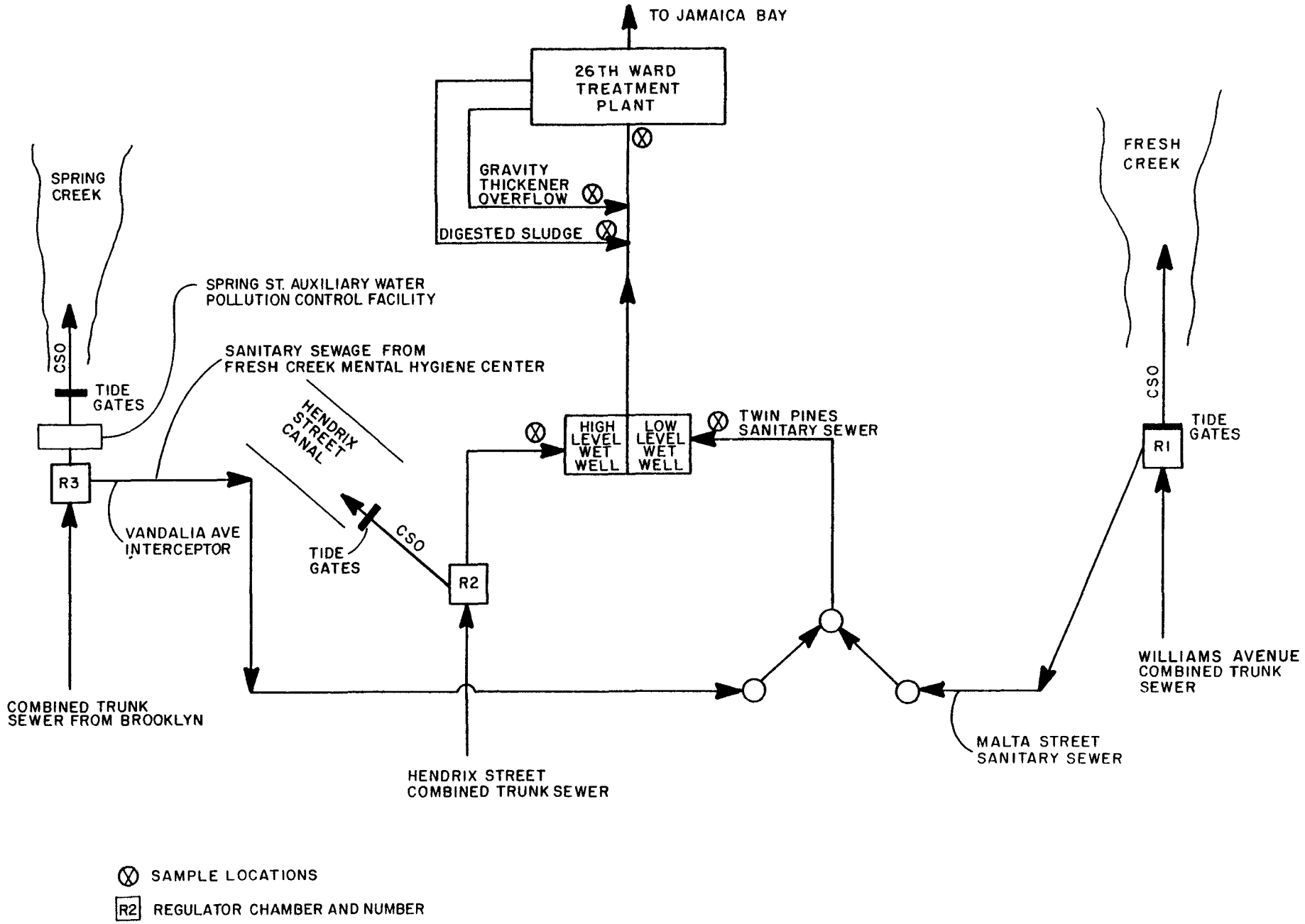

FIGURE 5.4
PLAN VIEW OF THE 26th WARD INTERCEPTOR SYSTEM

at the regulator locations of the Williams Avenue and Hendrix Street drainage areas because of the fact that the samples collected include combined sewer flow from the entire 26th Ward drainage area. The background sampling program in Newark was altered to address this deficiency. The Saybrook Place, Rector Street, and Hebert Place sandcatcher chambers were each sampled for a five-day period (24-hour composites collected). Sampling began on August 17, 1981 and continued through August 21, 1981. Twenty-five days of dry weather conditions preceded the dry weather sampling.

Further evaluations assessed the validity of background samples collected days, weeks, or months prior to storm sampling. Since the background data represents the wastewater characteristics prior to a storm event, sampling should be conducted as close to the start of the storm event as possible. Sampling immediately before the storm event provides direct comparison between dry and wet weather conditions, while advance sampling of dry weather conditions limits the credibility of the data. Sampling frequencies and duration of pre-storm sampling periods should be based on the characteristics of the collection system, manpower requirements, and weather characteristics. Supervising field personnel are responsible for initiating and terminating the background sampling. Collection system lag-time, storm direction, speed, and intensity are key factors in deciding when to commence or terminate sampling.

Background sampling in Newark included procurement of samples immediately prior to storm conditions. The focus in evaluating a background sample immediately prior to a storm event during the pilot study was to first establish if it is reasonable to physically collect this type of sample; secondly, to evaluate the discrepency, if any, between data results from this sample versus extended dry weather sample results; and thirdly, to determine the sample frequency and volume that should be procured to obtain a representative background sample.

Results from sampling in Newark, N.J., indicated that collection of background samples prior to a storm event is feasible and that data from these background samples do vary significantly from the data for samples collected during an extended dry weather period. Detailed results are presented in Section 7 - Data Evaluation. Samples were collected as instantaneous grab samples as close to the start of a storm event as possible. This provided a data base that projects the actual pollutant mass at the beginning of the storm event. Analytical results of the background samples may not reflect changes in the baseline wastewater characteristics as a result of industrial flow or flow variations during the storm event. However, an extended dry weather sample period prior to the storm event likewise does not reflect those types of changes.

Samples collected during both background sampling programs were collected using automatic composite and manual grab techniques. Volatile organic, total phenol, cyanide, and oil and grease samples were collected as grab samples every four hours, preserved, and forwarded to the laboratories. The samples were composited in the laboratory in equal proportions prior to analysis. Extractable organics, metals, BOD_5, solids, chloride, COD, TOC, and ammonia samples were collected using automatic samplers. Aliquots of no less than 110 ml collected every 30 minutes were composited over the sample

period, distributed to the respective sample containers, preserved, forwarded to the appropriate laboratories, and analyzed. The composites represent constant time - constant volume samples. The selection of manual or automatic sampling techniques is influenced by the physical characteristics of the selected sampling points in the sewerage system and by EPA Sampling Protocol. Priority pollutant sampling techniques for specific fractions are established by EPA Sampling Protocol. Consequently, some of the sampling can only be conducted manually. In other cases, the placement of automatic sampling equipment may be limited by the physical constraints of the sampling locations.

Sediment Sampling

Sediment sampling proved to be more difficult than originally perceived. Ideally, sediment samples should be obtained by constructing a temporary dam structure and diverting the flow from a segment of sewer, entering the drained line and simply collecting the "scum sediment" layer along the normally wetted perimeter of the sewer. However, the ability to interrupt the flow and enter a manhole to access a sewer line upstream or downstream of the regulator was not possible during this study. Consequently, all of the sediment samples were collected from active sewer lines within the confines of a manhole. In addition, the larger sewer lines in the system near the regulator sample location always contained too much flow to permit the collection of sediment samples.

Sewer maps were used to locate possible sewer lines and access points that might promote sewage deposition. Many of the small lines in the further reaches of the drainage area had solids deposits. Only by repeated inspections of manholes could adequate volumes of sediment samples be collected. The collection procedure proved to be laborious and a questionable sampling methodology. All of the deposition sampled was obtained well upstream of the wet weather sampling points, thus making correlation of these data questionable.

Samples were collected by scraping the bottom of the manhole with a stainless steel beaker. In only one case was enough deposition collected from a manhole to fill two quart-size glass bottles, two pint-size glass bottles, and two VOA vials. Because of the dilutions required for analytical purposes, these volumes were satisfactory. If, as was usually the case, the deposition volume from a manhole was insufficient for the complete spectrum of analysis, the deposition from one manhole was blended with the deposition from other manholes to construct a complete composite sample.

Rainfall Sampling

Precipitation sampling and monitoring for the pilot study was only conducted in the city of Newark, N.J. Rain gauges and rain collectors were positioned between the Rector and Saybrook sampling locations. Two types of rain gauges were used to collect cumulative rainfall data: Belfort Instrument Company's eight-inch nonrecording rain and snow gauge, and a Belfort Universal recording rain gauge (weighing bucket). Since rainfall intensity analyses are a primary concern during the full-scale study, the weighing bucket recorder is better suited for this program. The recorder should be

sensitive enough to provide intensity data at least every 10 to 15 minutes. Therefore, either a six-, 12- or 24-hour gear ratio should be used.

Rainfall sampling collectors used in the pilot study consisted of three flat metal pans covered with aluminum foil. Aluminum foil was used to minimize cost and expedite the time to construct an acceptable collector. The area of the three pans was sized to collect the volume of sample necessary for conventional, nonconventional, and priority pollutant analyses during a 0.25 inch rainfall. During the field sampling, the three pans and two rain gauges were positioned in an open area. The three rain catch pans were arranged so the rainfall would drain into a common 2.5-gallon collection bottle throughout the rainfall event. At the conclusion of the storm event, the collected rainfall was distributed among the appropriate sample bottles.

Runoff Sampling

During the pilot study sampling, several alternatives were investigated for assessing the pollutant mass associated with urban runoff. One alternative was to sample a drainage area comparable to the selected catchment, with the exception that the second catchment be serviced by separated storm and sanitary sewers. In this manner, the storm water from the entire drainage area could be isolated at one or several locations for sampling in contrast to sampling only one small segment of the drainage area. Efforts to find such a drainage area were not successful. This exercise did indicate several variables to consider when searching for a surrogate drainage area or, for that matter, identifying a subcatchment area to represent a typical runoff location.

The second alternative was to locate catchbasins within the selected drainage area to represent the runoff. Several catchbasins were identified during a dry weather period for sampling based on land use, traffic volume, percent imperviousness, slope, and apparent size of the tributary area. The deficiencies of this selection process were apparent during the first storm event sampled. The first of two catchbasins selected was inundated with runoff to the point that a portion of the runoff bypassed the catchbasin. On the other hand, the flow to the second inlet basin was only a trickle. This demonstrated the critical need to select runoff locations during wet weather periods when the boundaries of the catchment and flow rates to the inlet structures can be determined.

An additional suggestion for runoff sampling is to select several runoff locations within the catchment area and composite these samples into a single sample at the conclusion of the storm event. Manpower and cost constraints may limit the number of runoff locations that may be monitored.

To determine the effects of surface runoff related to combined sewer flow, storm water runoff samples should be collected before the runoff enters the collection system (i.e., at street elevation). Automatic sampling equipment may be employed for extractable toxic organics, toxic metals, and some conventional/nonconventional samples. However, the advantages, if any, of collecting samples in this manner are limited. The fact that each

runoff location must be manned to properly collect VOA samples favors the use of manual grab collection procedures for all parameters.

Regardless of the sample collection technique used, the samples must next be composited. Though flow proportioning the runoff samples will yield a more accurate characterization of the runoff, the manpower and field logistics for such an endeavor must be considered. Sampling the runoff locations on a constant time-constant volume basis in lieu of flow proportioning was considered. A comparison of these compositing techniques was to be attempted during the pilot study, but was not possible because of the lack of flow information.

Qualitative results were obtained during the pilot study, indicating that certain pollutant concentrations (TSS and metals in particular) increase significantly during the early stages of the storm event (flushing of the drainage area) and decrease during the final stages. To approximate the runoff loadings (a secondary objective of the CSO program), the following procedures should be used: 1) collect constant time-constant volume samples at as many locations in the selected catchment area as possible throughout the storm event; 2) composite the samples proportionately based on area or approximate flow volume, if available, into a single runoff sample per catchment area; and 3) approximate the runoff volume by monitoring the CSF rate during the storm event and subtracting the measured or estimated dry weather flow.

First Flush Sampling

In an effort to define the first flush period, several indicator measurements or parameters such as solids, temperature, and conductivity should be considered.

Conductivity is the measure of the ability of the wastewater to conduct an electrical current. This measure is proportional to the ionic concentration of a given stream. While most inorganic salts, acids, and bases are relatively good conductors, organic compounds that do not dissociate in water have a low conductivity. For wastewaters with discernible amounts of free acids or alkalinity (such as those anticipated during the full-scale study), the conductivity of the wastewater should approximate 30 to 50 percent of the total dissolved solids (TDS) concentration of the wastewater. The advantages of using conductivity readings as a measure of the first flush period are: 1) no sampling and analysis are required; 2) continuous instantaneous readouts are possible in the field; and 3) the conductivity range is sensitive to changes in the characteristic of the wastewater. Conductivity readings in the range of 300 to 700 micromhos per centimeter (μmhos/cm) for sanitary/industrial sewage and from 50 to 100 μmhos/cm for a dilute CSF during a storm event could be expected. The major disadvantage in using this method is that organic materials that do not dissociate in solution are not accounted.

Temperature is an in-situ measurement that can yield a qualitative representation of first flush periods. However, the lack of sensitivity of this parameter (change of only 5°C to 10°C throughout the storm event) requires much discretion on the field sampling crews' part in explicitly

identifying the first flush period. The advantages of using this technique are no sampling requirements and immediate in-situ results.

Use of solids analyses (TS, TSS, and SS) to define the first flush period was evaluated. Grab samples were collected at equal time intervals throughout a storm event. At the conclusion of the storm event, each grab sample was analyzed for the various solid constituents. The concentrations of the solids were then plotted with respect to time. The concentration of the TS, TSS, and SS remain comparable to the dry weather solids concentration, then decrease substantially as the effects of dilution become apparent. The settleable solids analysis was determined to be a more satisfactory method to define the first flush for the pilot study based on a qualitative evaluation. Due to the lack of available flow information, a more detailed analysis could not be formulated.

5.4 GENERAL CONSIDERATIONS

Practical operational considerations such as safety, meteorological support, field and laboratory personnel scheduling, transportation, supplies, and insurance/indemnification requirements are important factors that are necessary for both the initiation and success of a wet weather sampling effort. These considerations are discussed below.

Safety

Sampling locations, such as regulator chambers or manholes, are often located in the middle of streets and intersections. Therefore, special attention must be given to protecting the job site(s) from traffic. Advance warning devices such as barricades, signs, cones, and flashers are necessary to alert traffic and allow drivers time to take appropriate action.

In order to minimize the chance of injury, precautions should be taken whenever working in or around manholes. Proper tools and equipment must be utilized at all times. When entering a manhole, a hardhat, gloves, boots, and harness are necessities. A bucket should be used to lower and raise equipment needed by crewpersons within a manhole.

The hazardous atmosphere of manholes and sewers dictate the need to check for combustible gases and vapors, oxygen deficiencies, and toxic gases, particularly hydrogen sulfide. In the event any of these situations develop, the use of a blower while personnel are in manholes or sewers is recommended. A self contained breathing apparatus may be needed in some instances. However, locations that require their use are not likely to be suitable for sampling.

At the very least, a general knowledge of first aid procedures by all members of the sampling crew is vital. Crew members should know the locations of the nearest telephone, hospital, and police and fire stations.

Meteorological Support

Sampling crews must receive adequate advance warning so they can travel to the sites, set up and prepare equipment, and collect wet weather

background samples prior to the start of a storm event. The success of a sampling effort is highly dependent on a rapid and orderly response to an approaching storm. Accurate weather forecasting information is essential to minimize the number of false starts. Because of the complexity of accurate storm forecasting, communication with a professional meteorologist should occur daily to obtain short and long term weather predictions for the area of concern.

A storm forecast should indicate the type of storm, the expected time of the rainfall, and the total amount of rainfall. The storm intensity/duration forecasting should be used to select storm events that cause overflow conditions to occur at the regulator sites.

Field and Laboratory Personnel Scheduling

Sampling crews should be kept informed as to the weather status, especially on weekends and during periods they are away from their assigned work areas. Each individual should have a listing of telephone numbers for each crew member. If a crew member plans on being away from his home or business telephone number for any length of time, the crew chief should be informed. This allows for scheduling a replacement. When sampling is initiated, the laboratories scheduled for sample analysis should be informed of incoming samples as far in advance as possible.

Transportation

Equipment necessary for the successful undertaking of a sampling episode should be packed and ready to go at a moment's notice. Two vehicles for each sample location are needed. Vehicles used should be of proper size to allow comfortable working conditions at the job site and enough space to safely transport samples. One vehicle should be of a large size; a van is best suited for working at the sample point. The second vehicle is needed for contingencies (such as going for ice or other supplies) and possibly for use in travel for collection of runoff samples.

Equipment and Supplies

All equipment and supplies needed throughout an entire study should be on hand before the study is initiated. Sample containers should be properly prepared, labeled, and packed at least one storm in advance. Employing a safe, convenient staging area for the purposes of storing equipment such as rain gear, ladders, rain gauges and collectors, traffic signs and cones, etc. is helpful. The staging area should be located as close to the sampling site(s) as possible. The local public works department may be able to recommend or provide such an area.

Insurance and Indemnification

One of the first considerations in the design of a wet weather sampling study is to check with officials of the town or city regarding the need for specific insurance and/or indemnification requirements. If the requirements are deemed excessive, the town or city may be eliminated from further consideration.

A review of the legal and physical requirements for entering a sewerage system prior to any field sampling activities is an important factor that must be investigated. Local governing authorities, in most cases, require legal authorization for any contract work conducted within their jurisdiction. Furthermore, site specific, physical entry requirements have to be reviewed to tailor the individual sampling programs to site conditions.

Basically, there are two ways to insure both parties for liability coverage. The first is to include the owner as a rider on the contractor's existing comprehensive general liability policy, or for the contractor to purchase, in the name of the owner, an "Owners and Contractors Protective Liability" policy. This policy can be written with fixed combined limits for bodily injury and property damage. When a policy holder includes a rider on an existing general liability policy, that rider is then subject to any specific terms, conditions, and exclusions included in the policy. However, if the contractor insures the owner on a separate "Owners and Contractors Protective Liability" policy, he protects the owner and contractor against any liabilities incurred by the potential hazards of the contracted work. In either case, the contractor assumes full legal liability for injuries incurred, up to a said limit, due to the contractor's negligence during the course of the contracted work.

Additionally, in some cases the owner may require the contractor to sign an indemnification agreement. In essence, this document releases the owner, his officers, agents, or officials from any loss, claims, and/or suits against bodily injury, property damage, or death that result from the contractor's or subcontractor's negligence.

SECTION 6
FLOW MONITORING

6.1 GENERAL

Determination of accurate flow rates is a critical element for a program such as the full-scale CSO toxic pollutant study. Flow rates are required for the calculation of mass pollutant loadings as well as to determine the proportions of a sample when compositing. The choice of flow monitoring methods for combined sewers is highly dependent on the physical characteristics of each site. Flow monitoring techniques for use at a specific location cannot be determined before a field reconnaissance investigation is conducted even when historical information indicates existing monitoring equipment is in place at a potential site. The methods for combined sewer monitoring must be flexible enough to monitor flows ranging from near zero during dry weather night periods to full capacity during heavy rainfall periods. The discussion presented below briefly reviews flow monitoring techniques applicable to combined sewer monitoring. Specific monitoring techniques were not evaluated during the pilot study.

6.2 METHODOLOGIES

The first method of flow monitoring is the slope-area method that, when substituted into Manning's equation

$$Q = \frac{1.49}{n} AR^{0.66}S^{0.5}$$

provides an estimate of the instantaneous discharge. This method is very popular because of its simplicity. Only depth measurements are required once the sewer slope(s) and surface roughness coefficient (n) have been estimated. A separate primary velocity flow measuring device is not needed since the sewer itself serves as the primary monitoring device. The area (A) and hydraulic radius (R) are determined by measuring the flow depth and knowing the geometry of the conduit. A straight course of channel between 200 to 1,000 feet in length prior to the monitoring station is required[8]. Submergence or backwater effects must be avoided completely.

The accuracy of this method is low because of the difficulties in estimating roughness coefficients (n) and slopes of the sewer line. In addition, the requirements of uniform flow, the presence of a straight channel upstream, and other physical characteristics of the site make obtaining highly accurate results even more difficult. The accuracy of this method is reported to be in the 80 to 85 percent range[8] and 80 to 90 percent

under careful application of the method.[9] Otherwise, the error may rise to 20 to 50 percent or more.[10]

The parameter that must be monitored for the slope-area determination, as well as a number of other flow monitoring methods, is the depth of flow of the stream. Depth measurements may be taken manually (such as by a staff gauge), or automatically by float activated level recorders, bubbler tubes, electrical sensors, or accoustic sensors. Situating the level recorders in the proper location is critical to obtain reliable flow information. Manual depth readings may be obtained by inserting a staff gauge directly into the wastewater and recording the depth directly or by measuring the elevation between the water surface and a datum point (for instance the rim of a manhole) and subtracting this distance from the total distance between the sewer invert and the selected datum. The latter of these two options is especially useful if entrance to the sewer system is restricted during storm conditions.

Float activated level recorders are capable of providing reliable, continuous depth measurements throughout a storm event. Floats are usually used in conjunction with a stilling well, although they are available in designs to measure open channel flow in a sewer. Limited vertical range because of the float arms is a major disadvantage of this type of recorder. However, if the vertical range is adequate for the application, the ease of installation, cost, and accuracy make the float level activated recorder attractive.

Bubbler tube recorders release a gas (usually nitrogen or carbon dixoide) at a constant rate through a tube attached to the bottom of the channel to be monitored. The recorded pressure that permits the gas to escape the tube is directly proportional to the water depth. This method of depth recording is simple, requires no moving parts, and presents no resistance to flow. Although the installation procedures are not as simple as float recorders, the cost and time required are reasonable.

Electrical sensors make use of a change in capacitance to sense liquid level. Advantages of using electrical sensors are the absence of any moving parts, and the elimination of the need for gas supplies or stilling well installations. The main disadvantage is the need for the sensing element to be situated directly in the wastewater. The presence of large amounts of foam and oil and grease may also cause erroneous readings.

Ultrasonic sensors are placed in a manhole or chamber above the wastewater. The depth to the water surface is recorded in this instance rather than the actual wastewater depth. Concern should be given for potential problems from echos in deep narrow channels, pipes, and manholes at low flows.

Another flow monitoring method involves velocity measurements that, when monitored in conjunction with the cross-sectional area of the waste stream, yield instantaneous flow rates ($Q = A\ V$). The previous discussion addressed methods for depth calculations that provide appropriate cross-sectional areas. Normally, a series of velocity measurements are necessary to determine the average or mean velocity. Mean velocities are estimated by

assuming that a relationship exists between the average and the measured velocity. The velocity is measured and converted to an average value based on a empirical relationship observed. The methods most applicable to monitoring the velocity of combined sewers are current meters, floats, tracers, electromagnetic velocity meters, and ultrasonic flow meters.

Current meters are designed to take direct velocity measurements at various depths to obtain an average cross-sectional velocity. Average readings of those reported at 0.2 and 0.8 the cross-sectional depth approximate the actual average velocity[11]. Velocity readings taken at 0.6 the depth have also been used to approximate the average cross-sectional velocity. A disadvantage of several of the current meters is their non-applicability at low flow.

Floats can be used to approximate the surface velocity of a stream which, when multiplied by a factor of 0.85, should roughly estimate the average cross-sectional velocity[12]. The specifics of the conduit slope, length of float run, and depth of flow all may effect this method. This analysis provides a quick, inexpensive, rough approximation of the velocity that can be used to check the range of more sophisticated methods.

Tracers, such as salt, dye and radioactive substances, have also been used to monitor flow rates. In this method, a slug of the tracer is instantaneously injected upstream and the time of its travel along a known distance is measured. Considerable judgement is required to determine the center of the mass of the dye pattern and, consequently, the accuracy of this velocity measurement is limited. Salt is a preferential tracer since the electrical conductivity of the tracer may be better documented than visual inspection for dyes. Similar to floats, tracers provide insight to the accuracy of other velocity methods.

A number of commercially available electromagnetic velocity meters provide extremely accurate (± 1 percent) direct velocity readings[10]. Similar to current meters, the electromagnetic sensor must be inserted at different depths to obtain a representative average velocity. Most meters have the capacity to cover a wide flow range. Cost for such a meter may be a limiting factor, however.

The discussion to this point has focused on open channel sewer flow monitoring. Many of the overflow lines in combined sewer collection systems are constructed with modified broad crested weirs. The weirs prohibit extraneous waters from entering the collection system, provide some in-line storage of CSF, and also minimize the occurrence of peak dry weather overflows. This built-in feature is attractive for monitoring CSOs. Flows are computed by measuring the head over the weir. Several considerations for flow measurements using weirs include:

- The height of the weir must be at least twice the maximum expected head of liquid above the crest of the weir[8]. This ratio is necessary to lower the velocity of approach. In no case should the height be less than one foot.

- The approach section to the weir should be straight for a distance of at least 20 times the maximum expected head and should have little or no slope.

- Head measurements should be conducted upstream at a distance three times the maximum expected head on the weir. Also the zero point of the head measuring device must be set exactly level with the weir crest.

- The crest and the upstream side of the weir must be cleaned periodically.

- The approach channel should provide a smooth flow with no turbulance and a uniform velocity across the channel.

- The velocity of approach must be kept to a minimum.

Most properly installed and maintained weirs have an accuracy of 90 percent[8]. Errors of more than 10 percent can be encountered if the weirs are not properly maintained and monitored. Weirs should be calibrated by a second flow monitoring technique after installation to determine the "C" and "r" values in the generalized weir formula ($Q=CLH^r$). The "C" value is a discharge coefficient specific to each installation while the "r" coefficient is a factor dependent on the type of weir (horizontal-crested, v-notch, etc.).

A final flow monitoring technique that is applicable to the wide range of flows experienced in combined sewer systems is that of dye dilution. The Law of Conservation of Mass defines the relationship between the dye concentration of a sewage sample and the flow rate.[13] In this method the flow is measured by injecting a known concentration of tracer at a fixed flow rate. The combined sewer flow value is calculated by collecting samples downstream and determining the dye concentration. This method is extremely applicable to CSF monitoring since it can be used in any shape conduit, whether it is flowing full, partially full, or under pressure.

As previously mentioned, the flow monitoring techniques to be incorporated in such a study are strictly site specific. Development of a stage height versus discharge relationship is strongly recommended prior to initiating the sampling phase of this study since dyes, velocity meters, floats, etc. may interfere with the sampling. A stage-discharge relationship is constructed by plotting the measured discharge against the stage (water-surface elevation) at the time of measurement. In constructing stage-discharge curves for the given sample locations, as many flow monitoring techniques as possible that are applicable should be undertaken to ensure accuracy. Similarly, before assuming the reliability of existing velocity and/or depth recording equipment that may be in-place, calibration efforts to verify their accuracy should be pursued.

SECTION 7
DATA EVALUATIONS

Post sampling trip reports that summarize the field sampling activities during this pilot study are presented in Appendix A. Analytical results for dry weather background and storm event sampling are presented in Appendix B. Summary analyses presented in this chapter are based on these analytical results.

7.1 26th WARD - DRAINAGE AREA

Dry Weather Background Results

Automatic samplers were used to collect composite samples from the influent wet well at the head of the primary settling tanks at the 26th Ward POTW. Grab samples were also collected every four hours for cyanide, VOA, oil and grease, and total phenol fractions. Seven consecutive 24-hour background samples were collected. Average daily flows were recorded during the sampling period.

Digested sludge and gravity thickener overflow return flows are recycled to the headworks of the POTW prior to the influent sample location. Access to the influent line prior to the return flows combining with the influent stream was not physically possible. Therefore, the two return flow lines were also sampled in order to characterize the pollutant contribution of the recycle lines.

There were two major deficiencies in the initial seven day background sampling program. First, the fact that the influent waste stream could not be isolated prior to combining with the recycle lines required that three times the number of samples initially projected be collected. Second, the influent to the POTW was not truly representative of the wastewater generated in the catchment area since wastewaters other than those from the Williams Avenue and Hendrix Street drainage areas were included in the total influent flow. For these reasons, the background data should be reviewed cautiously.

Wet Weather Sample Results

Three storm events were sampled in the 26th Ward drainage area as part of the CSO pilot study effort. Seven sets of CSO grab samples were collected at the Hendrix Street regulator during storm event number one. Flow measurements were not taken during this sampling episode. Therefore, data evaluations are based only on pollutant concentrations rather than mass flux.

A total of 29 priority pollutants were detected at least once in the seven overflow samples; 16 pollutants were detected 50 percent or more of

the time; and 12 pollutants were detected in each of the overflow grab samples. Chromium (19 µg/l to 88 µg/l), zinc (166 µg/l to 932 µg/l), bis(2-ethylhexy)phthalate (10 µg/l to 58 µg/l), trichloroethylene (12 µg/l to 24 µg/l), and methylene chloride (0.6 µg/l to 26 µg/l) were present in the highest concentrations. Most metal concentrations were observed to noticeably decrease as the storm progressed suggesting a flushing of the system during the initial stages of the storm event. The concentration of organic priority pollutants did not demonstrate any readily identifiable trends.

During the second strom event, two sets of runoff grab samples, one CSF grab sample, and one CSO grab sample were collected from the Hendrix Street drainage area. In addition, a single CSF grab sample was collected at the Williams Avenue regulator. Flow monitoring was also not conducted during this sampling episode. Therefore, data evaluations are based on pollutant concentrations only.

A total of 10 priority pollutants were detected in the runoff samples, 19 priority pollutants in the CSF sample, and 17 priority pollutants in the CSO sample at least once at the Hendrix Street location. Six priority pollutants were detected in both runoff grab samples. [Chromium (19 µg/l to 173 µg/l), copper (69 µg/l to 453 µg/l), lead (115 µg/l to 774 µg/l), zinc (163 µg/l to 1000 µg/l), nickel (25 µg/l to 78 µg/l) and cyanide (61 µg/l to 181 µg/l)]. Generally, the second runoff sample, which was collected 5 minutes after the first sample, showed a significant reduction in pollutant concentrations. This occurrence is likely attributable to the dilution of pollutants as a result of an increase in the runoff flow.

At the Williams Avenue regulator, a total of 15 priority pollutants were detected in the CSF grab sample. Copper (124 µg/l), lead (115 µg/l) and 1,1,2,2-tetrachloroethylene (270 µg/l) were present in the highest concentrations.

Four sets of runoff grab samples were collected from the Williams Avenue drainage area during the third storm event. A total of 13 priority pollutants were detected 50 percent or more of the times, and four pollutants were detected 100 percent of the time. [Copper (28 µg/l to 155 µg/l), lead (55 µg/l to 689 µg/l), zinc (178 µg/l to 498 µg/l) and cyanide (50 µg/l to 72 µg/l)]. The concentration of metals again showed a significant decrease as the storm progressed. Organic priority pollutants were not detected in a consistent pattern. Results are presented in Appendix B-2, B-3 and B-4.

7.2 PASSAIC VALLEY DRAINAGE AREA

Dry Weather Background Results

Automatic samplers were used to collect 24-hour dry weather background samples during a five day period. Composite samples were collected at the Saybrook Place, Rector Street, and Herbert Street regulator locations in Newark, New Jersey. Grab samples were also collected every four hours at each of the three locations for cyanide, oil and grease, VOA and total

phenol. Flow measurements (velocity and depth) were normally recorded every four hours at each location. However, as a result of incomplete flow data during the first two periods, the dry weather background pollutant mass analysis was only based on three of the five sampling days (days 3, 4 and 5). Appendix B-5 presents the dry weather background data for the Newark sites.

During the five day period, 21 organic priority pollutants were detected in the waste stream tributary to the Rector Street drainage area, in comparison to 16 and 25 organic priority pollutants at the Saybrook and Herbert Street drainage areas respectively. Of the priority pollutant metals, chromium, copper and zinc were detected at the highest concentrations at each regulator location. Table 6.1 presents a comparison of selected pollutant concentrations and mass loadings for the three catchment areas.

Table 6.1 Summary of Selected Pollutants Detected During Dry Weather Sampling - Newark, NJ

	Rector		Saybrook		Herbert	
	mg/l	lb/d	mg/l	lb/d	mg/l	lb/d
BOD_5	104	867	86	1449	205	855
TSS	20	167	41	691	107	446
chloroform	0.029	0.24	0.025	0.421	0.011	0.05
chromium	0.325	2.70	0.009	0.152	0.006	0.025
copper	0.048	0.400	0.043	0.724	0.110	0.471
zinc	0.057	0.475	0.053	0.893	0.125	0.52
cyanide	0.129	1.10	0.116	1.954	0.166	0.69

In addition to sampling during a five consecutive day period to characterize the pollutant mass during dry weather periods, an alternative sampling procedure investigated was to collect samples immediately prior to a storm event. Grab samples were collected at both the Rector and Saybrook regulator locations just before the second storm sampling episode (Table B-7). Table 6.2 presents a comparison of the average dry weather background results and the results of those grab samples taken just prior to the storm event for several conventional and priority pollutants. Generally, the concentrations and pollutant masses for the samples taken prior to a storm event are higher than for those collected during the extended dry weather period. This difference in pollutant loads identifies the significance of selecting the proper background period for characterizing dry weather pollutant mass.

Table 6.2 Comparison of Dry Weather and Wet Weather Background Results - Newark, NJ

		RECTOR				SAYBROOK			
		DW BKG		WW BKG		DW BKG		WW BKG	
	Units		lb/d		lb/d		lb/d		lb/d
BOD	mg/l	114	867	112	863	86	1449	70	922
TSS	mg/l	20	167	52	401	41	691	44	580
chloroform	µg/l	29	0.24	69	0.53	25	0.42	33	0.43
trichloroflurometh ane	µg/l	ND	ND	40	0.31	ND	ND	<10	0.13
1,1,1-trichloroethane	µg/l	0.84	0.006	<10	0.08	1.8	0.02	186	2.45
bis(2-ethylhexyl) phthalate	µg/l	4.3	0.03	ND	ND	3.3	0.043	24	0.32
2,4-dinitrophenol	µg/l	ND	ND	177	1.36	ND	ND	ND	ND
chromium	µg/l	325	2.70	50	0.38	9	0.152	20	0.26
copper	µg/l	48	0.4	100	0.77	43	0.72	60	0.79
zinc	µg/l	57	0.475	180	1.39	53	0.89	100	1.31
cyanide	µg/l	129	1.10	175	1.35	116	1.95	78	1.03

DW BKG - Dry weather background (25 days antecedent dry weather conditions).

WW BKG - Wet weather background (sample collected immediately prior to storm event).

Wet Weather Sample Results

Three storm events were sampled in Newark. Sampling during storm event number one consisted of collecting two runoff grab samples, a CSO grab sample and a CSF grab sample in the Saybrook catchment area and a single CSO grab sample at the Herbert Place regulator chamber. No flow measurements were obtained during this sampling episode. Therefore, data evaluations and analysis are strictly qualitative. In addition, because no time-history of the storm event is available, the samples cannot be correlated to a specific point on the system hydrograph (rising limb, peak, or recession of the hydrograph).

Of the samples collected in the Saybrook catchment area, the concentrations of lead, zinc and total phenols were higher in the runoff than those in the CSF and CSO samples. The only difference between the CSF and CSO samples is the time at which these samples were collected from the regulator manhole. Organic priority pollutants were not generally detected at concentrations above the analytical detection limits. Only chloroform (34 μg/l), methylene chloride (11 μg/l) and 1,1,1-trichloroethane (16 μg/l) were detected in the Saybrook CSF samples. Chloroform (39 μg/l) was the only organic priority pollutant detected in the CSO sample. Priority pollutant metal concentrations were generally higher in the CSO samples than those in CSF samples, an unanticipated occurrence. Again, lead, copper, and zinc were the pollutants present at the most significant concentrations in the CSO and CSF samples.

The Herbert Street CSO sample likewise showed high concentrations of lead, zinc, and copper. The organic pollutants 2,4-dinitrophenol (419 μg/l) and 2-methyl-4,6-dinitrophenol (118 μg/l) were also detected in this sample. Table 6.3 presents a summary of pollutant concentrations during this storm event.

Sampling efforts during the second storm event consisted of collecting a precipitation sample, background samples immediately prior to the storm event (wet weather background sample), a first flush composite sample, and five CSO samples at the Rector Street regulator. In addition to these samples, CSF and CSO grab samples of the influent and effluent from the regulator chamber were taken simultaneously in order to document any noticeable variation in the quality of the samples that may result from stratified flow conditions. At the Saybrook regulator, a background sample void of storm water flow (sanitary sewerage only) was collected, and a first flush composite determination (various methods of defining the first flush period) was pursued. The first flush analysis consisted of observing the settleable solids and settleable grit concentrations as a function of time. Flow monitoring efforts at the Saybrook regulator consisted of monitoring the CSF line; no CSO flow data were recorded. Similarly, no flow information was obtained at the Rector location.

During the first flush sampling at the Rector regulator, the total dissolved solids peak concentration occurred, as anticipated, during the very early part of the storm event with total suspended solids and settleable solids peaks occurring 20 minutes later. Appearance of solids in this order was not observed at the Saybrook regulator. Instead, during the first ten minutes of the storm at the Saybrook location, the suspended solids to total solids ratio was greater than that recorded at the Rector location. The TSS/TS ratio remained fairly stable, the peak dissolved solids concentration occurring 40 minutes into the storm period.

Table 6.3 Summary of Storm One Pollutant Concentrations - Newark, N.J.

Pollutant (Units)	Herbert CSO	Saybrook CSO	Saybrook Runoff A[1]	Saybrook Runoff B[1]	Saybrook CSF
BOD (mg/l)	167	233	78	67	170
TSS (mg/l)	100	164	166	100	100
total phenol (μg/l)	36	22	88	68	12
chloroform (μg/l)	27	39	ND	<10	34
2,4-dinitrophenol (μg/l)	419	ND	<10	<10	ND
2-methyl-4,6-dinitro phenol (μg/l)	118	ND	ND	ND	ND
copper (μg/l)	155	266	209	113	214
chromium (μg/l)	11	72	43	37	28
lead (μg/l)	338	288	1240	545	200
zinc (μg/l)	381	508	964	578	417

< = less than
ND = Not Detected
[1] = Runoff sample collected from adjacent inlet basins. Sample A was collected about 5 minutes prior to sample B.

Comparison of TSS/TS and TVS/TS at both the regulator and runoff locations would provide a simple means for evaluating the source and nature of residue material, namely, is the major source of residue material from runoff or a scouring of sediments from the drainage area or collection system. Because no runoff samples were collected during this storm event, further analysis to determine the source of the pollutants in the first flush samples could not quantitatively be identified.

All pollutants detected during the first flush period, with the exception of chloroform, were present at higher concentrations than those observed in the background samples procured immediately prior to the storm event. Metals in particular followed this trend. Table 6.4 presents a comparison of the concentration of selected priority pollutants detected in the first flush samples and the concentration of pollutants present in wet weather background samples. The amount of lead present during the first flush period increased by a factor of six while chromium, zinc, and copper increased by a factor of three. This analysis confirms the significance of the pollutant contribution during the early parts of a storm from surface runoff and/or scouring of the sewer system.

A comparison of simultaneous grab samples, one series of grabs being collected at the CSF location at the influent to the regulator chamber and the second series of grabs being procured downstream of the overflow structure (CSO), reveals very little difference between the samples. This analysis serves to demonstrate that sampling from a regulator chamber may represent both the CSF and CSO samples as long as turbulent flow conditions exist.

The precipitation sample showed a relatively high concentration of total phenol (127 μg/l) compared to that of the wet weather background sample (23 μg/l). The cyanide value of 54 μg/l was likewise unexpectedly high for this sample location. Few other priority pollutants were detected in the rainfall sample.

During the third storm event, four CSO grab samples at the Rector Street regulator, eight CSO grab samples at each the Saybrook and Herbert Street regulators, and a composite precipitation sample were collected. No flow monitoring was conducted during this storm event. Therefore, data analysis is qualitative only.

Seven priority pollutants (chromium, copper, lead, mercury, zinc, phenol, and cyanide) were detected in each of the four CSO grab samples at the Rector location in contrast to eight priority pollutants (methylene chloride, chromium, copper, lead, mercury, zinc, phenol and cyanide) detected in each of the eight CSO grab samples collected at the Saybrook location and eight priority pollutants (methylene chloride, bis(2-ethyhexyl) phthalate, copper, lead, mercury, zinc, phenol, and cyanide) in each of the eight CSO samples collected at the Herbert overflow location. Lead, copper, and zinc were detected in all of the CSO samples at significant concentration. Appendix B-8 summarizes the pollutant concentrations at each regulator location.

Because the time history of the storm and flow values are not available, the extent of the data evaluation is limited. Although pollutant concentra-

tions may show an increasing or decreasing trend as the storm progresses, the pollutant mass may show a different trend (due to flow variations).

Table 6.4 Comparision of First Flush Mass Flux to Background Mass Loadings - Newark, NJ

	Background (Immediately Prior to the Storm Event) lb/d	First Flush lb/d
trichloroflurometh ane	0.31	7.6
2,4-dinitrophenol	1.36	ND
1,1,1-trichloroethane	0.08	ND
chloroform	0.53	0.36
total phenol	0.18	0.30
chromium	0.40	1.34
copper	0.77	2.2
lead	0.31	1.95
zinc	1.4	3.9
cyanide	1.35	1.36

ND = Not Detected

SECTION 8
CRITERIA FOR FULL-SCALE CSO STUDY

8.1 GENERAL

To assess the presence, quantity, source, and fate of priority pollutants in combined sewer flows and combined sewer overflows on a nation-wide basis, uniform sampling and site selection criteria must be used. As a result of the pilot study, much information was obtained about the criteria for a full-scale CSO study. The following discussion presents those criteria.

8.2 SAMPLING PROGRAM

In order to establish baseline pollutant loads, several background samples should be collected. Samples of tap water, dry weather sanitary flow, wet weather background flows, precipitation, and sediments that accumulate in the collection system during dry weather periods should be collected. Composite samples of CSO, CSF, runoff, and first flush periods should similarly be collected in order to determine the presence and source of toxic pollutants. Table 8.1 lists suggested locations to sample as part of the full-scale study, and the respective compositing techniques. Figure 8.1 shows a typical scheme for dividing the collected samples into the appropriate sample fractions. It should be noted that these are recommendations and may be subjected to change depending on site-specific conditions during the full-scale study. Wet weather background grab samples for conventional/nonconventional and priority toxic pollutants collected immediately prior to each storm event provides an accurate background sample that reflects the dry weather wastewater contribution during a storm event.

A twenty-four hour dry weather composite sample provides daily dry weather flow and pollutant mass loads for comparisons. Automatic samplers should be programmed to draw equal volume sample aliquots at about 20 minute intervals. Grab samples for cyanide, oil and grease, total phenol, and VOAs should be collected every four hours, preserved, and forwarded to the designated laboratories to be composited and subsequently analyzed. Flow rates should be recorded throughout the 24-hour period.

One sediment sample should be collected for each catchment area under study. The samples should be taken from within the system (not from the debris accumulated at the regulator dam) in order for the sample to best represent the sediment that will be flushed from the collection system. Depending upon the specific construction of the collection system, these

TABLE 8.1 Recommended Sample Locations and Sampling Techniques.

Location	Composite Duration	Composite Technique	Aliquot Volume	Duration Between Samples	Comment
Dry Weather Background	24 Hours	Constant Time Constant Volume	135 ml	20 minutes	Composite aliquots of 135 ml every 20 minutes. Grab samples for VOA, CN, O&G and total phenol taken every 4 hours and composited in laboratory.
Tap Water	Grab Sample	Grab	2.5 gallons	Instantaneous Grab	One instantaneous grab sample for all sample fractions.
Sediment	Grab Sample	Grab	1 gallon	Instantaneous Grab	Grab samples for VOA, CN, metals and extractable organic toxic pollutants composited manually.
Wet Weather Background (prior to storm event)	Grab Sample	Grab	2.5 gallons	Instantaneous Grab	One instantaneous grab sample for all fractions taken as close to the start of the storm event as possible.
Combined Sewer Flow	Storm Duration	Flow Proportioned	1 gallon	To Be Determined	Composite aliquots and grab samples for VOA, CN and O&G taken at fixed time intervals and proportioned on a flow basis.
Combined Sewer Overflow	Overflow Duration	Flow Proportioned	1 gallon	To Be Determined	Composite aliquots and grab samples for VOA, CN and O&G taken at fixed time intervals and proportioned on a flow basis.
First Flush[1]	First Flush Duration	Flow Proportioned	1 gallon	To Be Determined	Composite aliquots and grab samples for VOA, CN and O&G taken at fixed time intervals and proportioned on a flow basis.
Runoff	Storm Duration	Constant Time Constant Volume	1 liter	To Be Determined	Composite aliquots and grab samples for VOA, CN and O&G taken at fixed time intervals and proportioned equally.
Precipitation	Storm Duration	Flow Proportioned	2.5 gallons	1 per Storm Event	All fractions taken from precipitation composite at conclusion of storm event.

[1] *First flush period determined based on conductivity or solids concentration.*

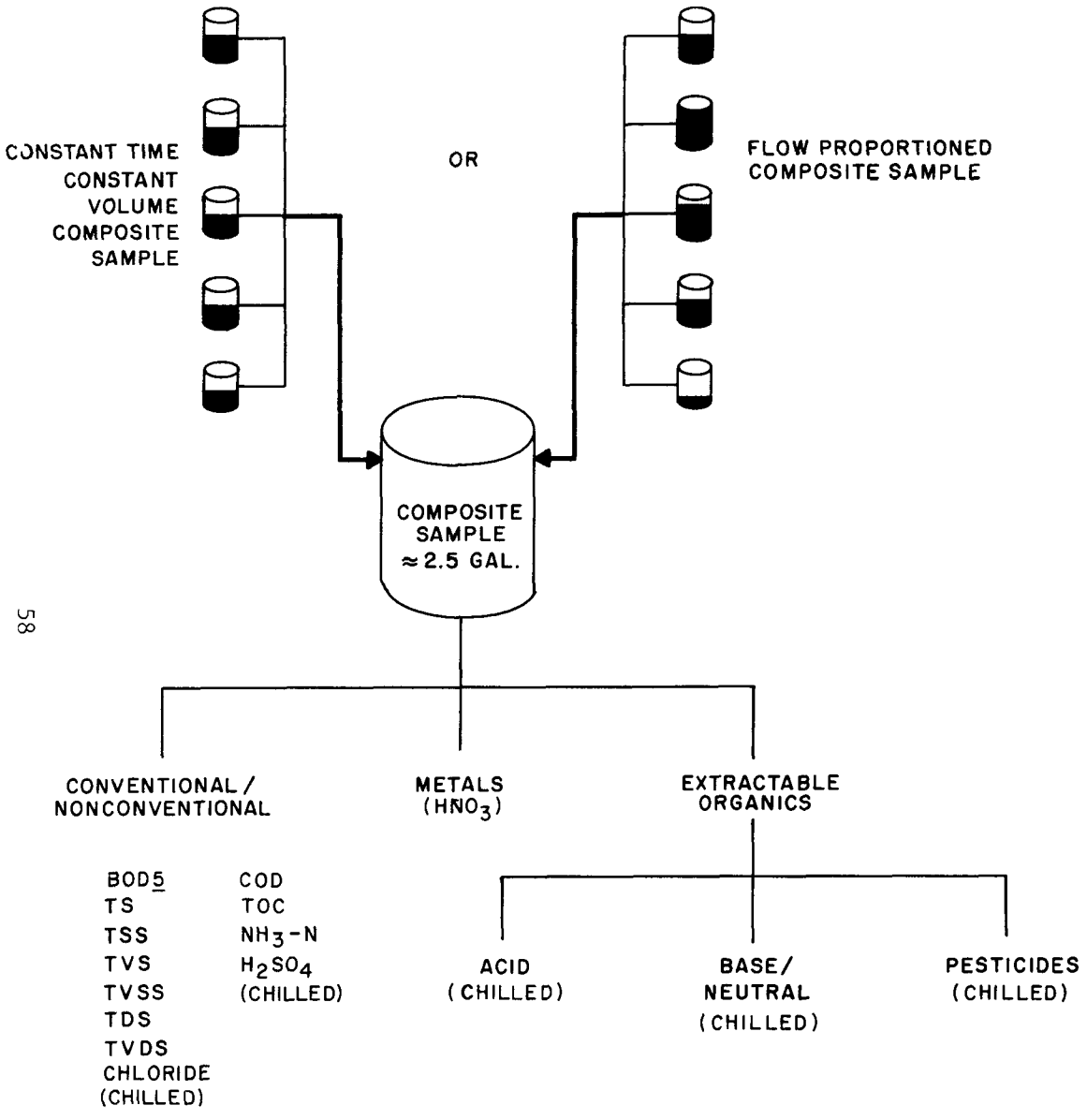

*GRAB SAMPLES IMMEDIATELY PRESERVED IN FIELD, THEN COMPOSITED IN LABORATORY EITHER IN CONSTANT VOLUME OR FLOW PROPORTIONED MANNER.

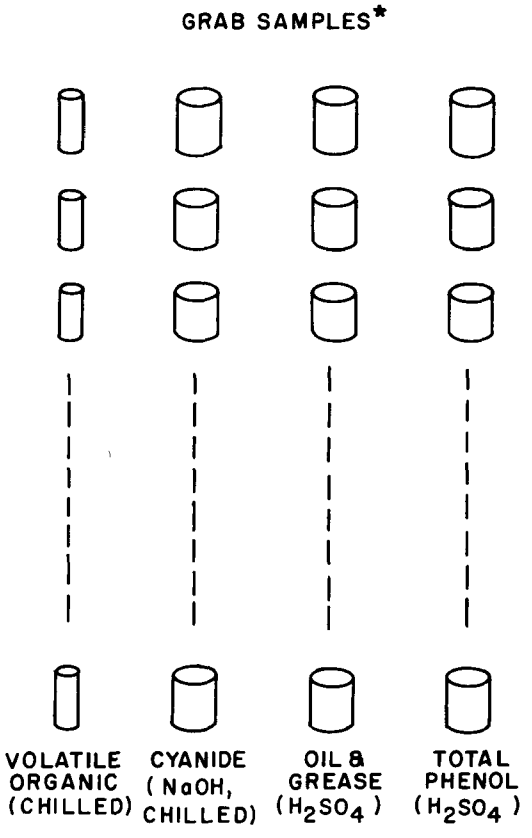

FIGURE 8.1
TYPICAL SAMPLE COMPOSITING SCHEME

samples may have to be composited from several locations in order to obtain the required sample volume. The sewer maintenance personnel may provide insight as to the best locations for sampling.

Sediment samples should be collected with a stainless steel or glass beaker. The container should skim the top layer of sediments from the accumulated debris in the sewer lines so the sample represents recently deposited sediments, i.e, settleable, scourable solids. The respective sample bottles should be continually filled until the sediments displace the liquid fractions. Volatile organic samples will be topped with the wastewater from the sewer lines to form a miniscus and then hermetically sealed. Minimum sample volumes required are as follows:

o	Extractable organic fractions	1 liter
o	Metals analysis	1 liter
o	Cyanide	250 ml
o	Volatile organic compounds	80 ml

Composite samples of combined sewer wet weather flow should be collected for each catchment area during each storm event. The samples should be flow proportionally composited over the duration of the storm event. Sample collection commences at the beginning of the storm event and terminates when the combined sewer flow returns to approximately the same rate as before the storm event. Composite aliquot grab samples collected every 15 - 30 minutes (depending on the size of the catchment area) and composited accordingly either at the termination of the storm event or as the storm procedes (aliquot volumes would be predetermined based on historical data) would constitute a representative sample. It is critical that the sample collection times be correlated with the continuous flow recording equipment so representative mass loadings can be calculated. Grab samples for cyanide, oil and grease, and volatile organic compounds should be collected at a predetermined constant interval. These samples should be flow proportionally composited in the laboratory. The sampling crew chief must provide written instructions about the proportions to be used for compositing these samples. These instructions must be shipped to the laboratory with the samples.

Combined sewer overflow samples should be collected in a manner similar to combined sewer flow samples. However, due to the anticipated shorter sampling period (overflow conditions should not extend during the entire storm event), the time interval between composite aliquot samples and grab samples for cyanide, oil and grease, and VOA should be decreased. The sample collection period should extend the entire duration of the overflow. Again, it is imperative that sample collection times be correlated to the overflow discharge record.

Runoff samples should be collected from street elevation (as the storm water discharges into the sewer). Samples should be collected from as many locations as possible per catchment area as constant time-constant volume composites, then composited according to tributary area to represent a single runoff sample for that catchment area. The selection of inlets to be sampled is dependent upon field personnel judgment. The sites should be

selected after observing potential locations during wet weather conditions. Samples should be collected during the duration of the storm event. Composite samples may either be automatically or manually collected while grab samples for cyanide, oil and grease, and VOA should be collected manually and immediately preserved at a constant time interval.

Separate first flush samples should be collected at the wet weather flow sampling location from the time the combined sewer flow increases until the completion of the first flush period. One liter extractable organic grab samples as well as one liter grabs for settleable solids should be collected at a constant time interval. Based on the volume of wastewater that is included in the first flush period, the samples should then be composited accordingly. Residue analyses are a viable indicator of the first flush period. Further evaluation on the method of defining the first flush period should be pursued prior to initiating a first flush analysis. In particular, conductivity measurements as a first flush indicator should be explored.

8.3 SITE SELECTION

Site selection criteria for the full-scale CSO toxic pollutant study include the following:

1. The study areas selected should be served by combined sewers. Although much pertinent information could be obtained by sampling separated collection systems and extrapolating data to simulate a combined sewer overflow, more representative data would be obtained by sampling combined sewer drainage areas.

2. The municipality should be willing to participate in the study. Experienced personnel employed by the local municipality can provide historical information on potential sample locations that otherwise may not be available. Communications should be maintained throughout the study directly with the field crews responsible for the operation and maintenance of the regulator locations.

3. Insurance/indemnification coverage required by the municipality must be reasonable. These requirements should be addressed as early in the study as possible to avert untimely delays and wasteful expenditures.

4. Catchment areas should have well-defined boundaries. The goal of the full-scale study is not only to measure the quantity of priority pollutants in CSOs, but also to identify the source of the pollutants and any observable correlations that may exist between pollutant mass, land use, rainfall intensity, and other elements. For this reason, it is important to locate drainage areas with definable boundaries.

5. Catchment areas should be served by a single regulator to reduce the number of samples that must be collected (a major consideration for priority pollutant sampling) and to reduce the field crew manpower requirements. Catchment areas with relief lines that do not discharge

to the regulator chamber should be avoided, as should catchment areas served by multiple regulators.

6. Selected regulator locations should be arranged such that both the CSF and CSO are accessible and adaptable for sampling. Regulator sample locations should be free of potential surcharge conditions as a result of tidal influences or river flooding.

7. Selected regulator locations should be arranged such that the CSF, CSO, and flow to the treatment plant can be adequately monitored. Locations with flow monitoring or level monitoring equipment in-place or where equipment can be adapted easily should receive priority.

8. Area land use should fulfill the objectives of the full-scale study. To monitor the fate of priority pollutants in combined sewer networks, it would be desirable to monitor industrial catchment areas where priority pollutants are suspected to exist. However, if only industrial catchments are sampled, the data base established will not be representative of CSO discharges on a national level. Mixed land use inclusive of industrial development is suggested as the selection criteria for the full-scale study.

9. Historical information (such as plans of the regulator chamber, drainage area acreage, land use, industries tributary to sample locations, slopes of the catchments, and frequency of overflows) should be available on the selected catchment areas.

10. The regulator chamber's sensitivity to overflow should be reasonable. The in-line storage capacity of the collection system should not be so large that overflows are limited to high intensity storm events. Similarly, the regulator selected should not exhibit a tendency to yield dry weather overflows.

11. Proximity of catchment areas to existing recording rain gauges should be investigated. Because storm intensities are a major consideration of this study, availability of an existing recording rain gauge is an asset.

12. Size and shape of the catchment area is a factor which must be considered in the selection process. The catchment area should be large enough such that it is not dominated by a single industry (an atypical system), yet small enough to be manageable for the study. Catchments less than 100 acres and greater than 1,000 acres should be screened carefully. The catchments chosen during the pilot study (177 acres to about 900 acres) are perceived as being acceptable for the scope of work of the full-scale study.

13. Accessability of the regulator locations is vital for the CSO study. Regulators situated at the intersection of major traffic arteries may not be attractive sample locations due to the potential delays and

additional manpower requirements to organize the sample location and re-route the traffic.

14. Safety of the sample crews and equipment must be assured.

In addition to these criteria, other site selection guidelines may be developed to further define the catchment areas selected if additional or more specific goals of the program are identified. In particular, attention should be given to developing a site selection criteria for land use in the catchment areas.

Combined sewers have been identified in about 1,300 communities across the nation, with the majority of the systems located in the northeastern and midwest sections of the country. Approximately 60 communities account for over 80 percent of the area served by combined sewers. A logical first step for the full-scale site selection is to evaluate these 60 cities. A priority list of cities to be considered for field reconnaissance visits should then be developed. It is important to recognize the need for site evaluations prior to final selection of sites for sampling.

REFERENCES

[1] Levins, P., J. Adams, P. Brenner, S. Coons, G. Harris, C. Jones, K. Thrun, and A. Wechsler. Sources of Toxic Pollutants Found in Influents to Sewage Treatment Plants - Volume I-IV. U.S. Environmental Protection Agency, Washington, D.C., 1979. 188 pp.

[2] Preliminary Results of the Nationwide Urban Runoff Program. U.S. Environmental Protection Agency, Washington, D.C., 1982. 16 pp.

[3] Burns and Roe Industrial Services Corporation. Fate of Priority Pollutants in Publicly Owned Treatment Works. EPA - 440/1-82/303, U.S. Environmental Protection Agency, Washington, D.C., 1982. 436 pp.

[4] E.C. Jordan Company. Fate of Priority Pollutants in Publicly Owned Treatment Works - 30 Day Study. EPA - 440/1-82/302, U.S. Environmental Protection Agency, Washington, D.C., 1982. 263 pp.

[5] Hazen and Sawyer Engineers. 26th Ward Water Pollution Control Plant Study of Excessive Wastewater Flows. Capital Project PW-206, 1977. 260 pp.

[6] E.T. Killam Associates. Overflow Analysis of the Passaic River. Prepared for the Passaic Valley Sewerage Commission. 1976.

[7] Hammer, M.J. and K.A. MacKichan. Hydrology and Quality of Water Resources. John Wiley and Sons, Inc., New York, New York, 1981. 486 pp.

[8] Shelley, P.E. and G.A. Kirkpatrick. Sewer Flow Measurements - A State-of-the-Art Assessment. EPA - 600/2-75-027, U.S. Environmental Protection Agency, Cincinnati, Ohio, 1975. 436 pp.

[9] American Society of Civil Engineers. Guide for Collection, Analysis and Use of Urban Stormwater Data. 1977. 115 pp.

[10] ISCO. ISCO Open Channel Flow Measurement Handbook, 1978. 221 pp.

[11] Linsley, R.K. and J.B. Franzini. Water Resources Engineering. McGraw Hill, Inc., New York, New York, 1979. 716 pp.

[12] Vennard, J.K. and R.L. Street. Elementary Fluid Mechanics. John Wiley and Sons, Inc., New York, New York, 1975. 740 pp.

[13] Duffy, D., "Fluorometric Flow Quantification in Twin Cities Sewer Studies," May 1982.

APPENDIX A

POST SAMPLING TRIP REPORTS

POST SAMPLING TRIP REPORT 1

W.O. 4896
Combined Sewer Overflow-Pilot Study

26th Ward S.T.P.
Brooklyn, New York

BRISC Sampling Team

H. Celestino
G. Martin

Characterization of Total Raw Sewage Received by the 26th Ward S.T.P. for Background Data

Set-Up: April 23, 1981

Sampling Period No. 1. April 24, 0800 hrs. - April 25, 0800 hrs.
2. April 25, 0800 hrs. - April 26, 0800 hrs.
3. April 26, 0800 hrs. - April 27, 0800 hrs.
4. April 27, 0800 hrs. - April 28, 0800 hrs.
5. April 28, 0800 hrs. - April 29, 0800 hrs.
6. April 29, 0800 hrs. - April 30, 0800 hrs.
7. April 30, 0800 hrs. - May 1, 0800 hrs.

Sample Point and Frequencies - See Table 1

Sample Point Description

Influent - Samples were collected at the influent wet well located outside at the head end of the primary settling tanks. Composite samples (24 hour) and grab samples (4 hour) were collected during the seven days of sampling. Phenol, cyanide, oil & grease, VOAs, BOD, TOC, COD, metals and extractables were collected during each 24 hour period.

Digested Sludge - Grab samples of the digested sludge were collected on the second, fourth, and sixth days of sampling. These samples were collected for all parameters. Sampling was conducted at the sludge splitter box in the digester building. Digester return flow is estimated at 100,000 GPD and 50+ percent of the influent BOD + TSS at the point in which we are sampling.

Gravity Thickener Overflow

Grab samples of the gravity thickener overflow ere collected during each of the 24 hour sampling periods. Samples were collected from two gravity thickeners on a rotating basis for all parameters. The gravity thickener return flow is estimated at 6 to 8 MGD.

Grab Samples - Single Grabs

Single grabs of the tap water taken from the laboratory, raw influent from the low level wet well, raw influent from the high level wet well were collected on the fourth and fifth days of sampling. Samples for all the parameters were collected at each of these sampling locations.

QA/QC Samples - During the first sampling period, duplicate extractable samples were taken at the influent, digested sludge and gravity thickener overflow sample points.

Summary of Operations

Flow Data - Influent flow was the only flow monitored in the plant during the seven days of sampling. The following table lists the flow and temperature recorded during the seven days of sampling.

FLOWS

Sample Period	Ambient Temp. Ave.	Influent	Average Daily Temp (^{o}C) Influent Temp.	Gravity Thick. Overflow	Digested Sludge	Tap Water	Low Level Wet Well	High Level Wet Well
1	7	79.01 MGD	14.5	16	x		x	x
2	9	52.54 MGD	14.5	16	23		x	x
3	16	52.65 MGD	15.5	17	x		x	x
4	17	53.24 MGD	14.5	17	23	12	x	x
5	16	74.20 MGD	14.5	17	x		16	16
6	22	57.00 MGD	16.5	16	24		x	x
7	16	54.05 MGD	16	19	x		x	x

CLIMATOLOGICAL DATA

Sample Period	Date	Temperature (°C) Maximum	Minimum	Average	Precipiation Inches	Conditions
1	4/25/81	18	9	14	0.10	Heavy Fog & Thunder
2	4/26/81	12	7	9	0.00	Clear
3	4/27/81	18	7	12	0.00	Clear
4	4/28/81	20	10	15	0.00	Clear
5	4/29/81	20	9	15	0.18	Fog & Thunder
6	4/30/81	22	12	17	0.06	Heavy Fog & Thunder
7	5/1/81	17	10	14	0.00	Clear

Sampling Operations

All sampling at the plant was conducted with no abnormalities or incidents which would affect the samples.

Sample Shipments

Samples	Laboratory	Carrier
All Conventionals	Burns and Roe	Hand Delivered
Water & Sludge Organics	Region VII	Trans World Airlines
Water & Sludge Metals	Region VII	Trans World Airlines

TABLE 1

26th WARD S.T.P.
SAMPLE POINT INFORMATION

Sample Point	Collection Method	Grab Frequency	Composite Samples	Collection Interval	Duration
Influent	Automatic Composite	6 times daily	24 hour	145 ml @ 21 min.[1] 225 ml @ 18 min.	7 days
Gravity Thickner Overflow	---	once daily	---	---	7 days
Digested Sludge	---	once daily	---	---	Day 2, 4, 6
Tap Water	---	single grab	---	---	Day 4 only
L.L.W.W.[2]	---	single grab	---	---	Day 5 only
H.L.W.W.[3]	---	single grab	---	---	Day 5 only

[1] Day 1 only

[2] Low Level Wet Well (L.L.W.W.)

[3] High Level Wet Well (H.L.W.W.)

TABLE 2

SAMPLING DETAILS

Sample Code	Sample Location	Sample Period	No. of Grabs
94000	Influent	1	6
94001	Gravity Thickener Overflow	1	1
94002	Influent	2	6
94003	Gravity Thickener Overflow	2	1
94009	Digested Sludge	2	1
94004	Influent	3	6
94005	Gravity Thickener Overflow	3	1
94006	Influent	4	6
94007	Gravity Thickener Overflow	4	1
94008	Tap Water	4	1
94010	Digested Sludge	4	1
94015	Influent	5	6
94012	Gravity Thickener Overflow	5	1
94018	Low Level Wet Well	5	1
94019	High Level Wet Well	5	1
94016	Influent	6	6
94013	Gravity Thickener Overflow	6	1
94011	Digested Sludge	6	1
94017	Influent	7	6
94014	Gravity Thickener Overflow	7	1

TABLE 3

SAMPLE BOTTLE SUMMARY
4/24/81 to 5/1/81

	94000	94001	94002	94003	94004	94005	94006	94007	94008	94009	94010	94011	94012	94013	94014	94015	94016	94017	94018	94019
Oil and Grease	0001	0061	0034	0072	0082	0107	0117	0142	0152	0162	0173	0183	0193	0203	0213	0223	0248	0273	0298	0308
Oil and Grease	0002		0035		0083		0118									0224	0249	0274		
Oil and Grease	0003		0036		0084		0119									0225	0250	0275		
Oil and Grease	0004		0037		0085		0120									0226	0251	0276		
Oil and Grease	0005		0038		0086		0121									0227	0252	0277		
Oil and Grease	0006		0039		0087		0122									0228	0253	0278		
VOA	0022	0064	0040	0075	0088	0110	0123	0145	0155	0168	0179	0189	0199	0209	0219	0229	0254	0279	0299	0309
VOA - Dup.	0023	0065	0041	0076	0089	0111	0124	0146	0156	0169	0180	0190	0200	0210	0220	0230	0255	0280	0300	0310
VOA	0024		0042		0090		0125									0231	0256	0281		
VOA - Dup.	0025		0043		0091		0126									0232	0257	0282		
VOA	0026		0044		0092		0127									0233	0258	0283		
VOA - Dup.	0027		0045		0093		0128									0234	0259	0284		
VOA	0028		0046		0094		0129									0235	0260	0285		
VOA - Dup.	0029		0047		0095		0130									0236	0261	0286		
VOA	0030		0048		0096		0131									0237	0262	0287		
VOA - Dup.	0031		0049		0097		0132									0238	0263	0288		
VOA	0032		0050		0098		0133									0239	0264	0289		
VOA - Dup.	0033		0051		0099		0134									0240	0265	0290		
Phenol	0007	0062	0052	0073	0100	0108	0135	0143	0153	0163	0174	0184	0194	0204	0214	0241	0266	0291	0301	0311
Cyanide	0009	0063	0054	0074	0101	0109	0136	0144	0154	0164	0175	0185	0195	0205	0215	0242	0267	0292	0302	0312
BOD	0011	0066	0056	0077	0102	0112	0137	0147	0157	0165	0176	0186	0196	0206	0216	0243	0260	0293	0303	0313
COD	0012	0067	0057	0078	0103	0113	0138	0148	0158	0166	0177	0187	0197	0207	0217	0244	0269	0294	0304	0314
TOC	0018	0068	0058	0079	0104	0114	0139	0149	0159	0167	0178	0188	0198	0208	0218	0245	0270	0295	0305	0315
Extractables	0015	0069	0060	0080	0105	0115	0140	0150	0160	0170	0181	0191	0201	0211	0221	0246	0271	0296	0306	0316
Extractables - Dup.	0017	0070								0172										
Metals	0013	0071	0059	0081	0106	0116	0141	0151	0161	0171	0182	0192	0202	0212	0222	0247	0272	0297	0307	0317
VOA Trip Blank	0020																			
VOA - Dup. Trip Blank	0021																			
Sampler Blank	0019																			
Metals Blanks	0014																			
Extractable Blank	0016																			
Finish Date	4/25	4/24	4/26	4/26	4/27	4/27	4/28	4/28	4/27	4/25	4/27	4/29	4/28	4/29	4/30	4/29	4/30	4/31	4/28	4/28
Sample Period	1	1	2	2	3	3	4	4	4	2	4	6	5	6	7	5	6	7	5	5

POST SAMPLING TRIP REPORT NO. 2

Subject: W.O. 4896-03
Combined Sewer Overflow - Pilot Study
(Hendrix Street Overflow)

Place: 26th Ward S.T.P.
Brooklyn, New York

Present: BRISC Sampling Team

H. Celestino
G. Martin

Purpose: Characterization of Raw Sewage at the Hendrix Street Overflow

Dates: May 11, 1981 to May 12, 1981

Discussion:

Hendrix Street Overflow - The Hendrix Street Overflow is located inside the 26th Ward S.T.P. Facility. Flow from the Hendrix Street interceptor to the 26th Ward Plant is regulated by a Brown & Brown regulator. During extreme flow conditions the regulator gate on the interceptor side of the regulating chamber closes and causes the flow to bypass to the Hendrix Street Overflow structure. The flow then passes through a set of four tide gates and into the Hendrix Street Canal.

The samples collected during this rainfall event were taken only during an overflow incident. Grab samples were collected every twenty minutes for the duration of the overflow period. Phenol, cyanide, oil & grease, TOC, COD, BOD, metals, extractables and VOA samples were collected for each grab sample.

Seven grab samples were collected during this rainfall period. A table of the sample times and clematological data are attached.

Clematological Data

Date	Temp °F Maximum	Temp °F Minimum	Temp °F Average	Precipitation	Conditions
5/11/81	59	55	57	.51	Fog and Thunder
5/12/81	60	52	56	.32	Heavy Fog & Thunder

cve

LOCATION - HENDRIX STREET OVERFLOW

DATE - 5/11/81 to 5/12/81

TIME	2100	2120	2140	2300	2400	0020	0040
SAMPLE CODE	94020	94021	94022	94023	94024	94027	94025
VOA	0323	0333	0343	0353	0363	0393	0373
VOA (DUP)	0324	0334	0344	0354	0364	0394	0374
Phenol	0320	0330	0340	0350	0360	0390	3070
TOC	0327	0337	0347	3057	3067	3097	0377
Oil & Grease	0322	0332	0342	0352	0362	0392	0372
COD	0326	0336	0346	0356	0366	0396	0376
Cyanide	0321	0331	0341	0351	0361	0391	0371
Metals	0329	0339	0349	0359	0369	0399	0379
Extractables	0328	0338	0348	0358	0368	0398	0378
BOD	0325	0335	0345	0355	0365	0395	0375

POST SAMPLING TRIP REPORT NO. 3

Subject: W.O. 4896
Combine Sewer Overflow Pilot Study

Place: 26th Ward Water Pollution Control Plant
Van Siclen Avenue
Brooklyn, NY
(Hendrix Street Regulator and Hendrix Street Line)

Present: BRISC Sampling Team

H. Celestino
G. Martin

Purpose: To Gather First Flush Samples from the Hendrix Street Line

Date: May 28, 1981

Discussion:

Weather forecasts for the New York area predicted heavy rainfall for the area beginning at noon (5/28/81) and continuing for 24 hours. All preparations were made to grab samples from the Hendrix Street Line as soon as the flow started to increase after the start of the rainfall) and to continue throughout the first flush period. A sample was also to be taken from the Hendrix Street Line prior to the rain for background information, and samples were to be taken at the overflow from the Hendrix Street Regulator if the flow reached the overflow level. Samples were to be taken every five minutes for solids (Pollutograph) analysis as well as individual aliquots for a composite (which aliquots to be used would be determined after the pollutograph analysis).

The rain did not begin until 1930 and it was so light and intermittant that there was no first flush effect. The flow to the plant (and the corresponding sewage level in the Hendrix Street Line) did not increase (actually decreased slightly) until 2330. During this four hour period the rain continued, and it was decided that any further rain after this period would not be representative of the first flush phenomenon and the sampling effort was aborted.

Rainfall readings from the weather station at J.F.K. Airport showed a total of 0.40 inches of rain from 1930 to 2400 with another 0.04 inches during the early morning hours. Temperatures ranged from 61°F to 70°F with an average temperature of 66°F.

cve

POST SAMPLING TRIP REPORT NO. 4

Subject: W.O. 4896
Combined Sewer Overflow Pilot Study

Place: 26th Ward Water Pollution Control Plant
Van Siclen Avenue
Brooklyn, N.Y.
(Hendrix and Williams Trunk Lines)

Present: BRISC Sampling Team

H. Celestino
G. Martin

Purpose: To Inspect Sewer Lines (Manholes) for Possible Sewer Sediment Sample Points.

Date: Monday, June 22, 1981

Discussion:

The regulator chamber for the Hendrix Street line was inspected and determined to be unsatisfactory for obtaining any type of sample, as the working area inside the chamber was too small to allow either the placement of sampling equipment or the gathering of grab samples.

The regulator chamber and overflow area for the Williams Street line was also inspected. There was no place within the overflow area/trunk line from which a sediment sample could be obtained, as the velocity and sewer shape was such that the normal scouring effect kept the area free of sediment. However, the line just beyond the regulator (downstream of the overflow weirs) had two disruptions in the channel shape where it appeared that sediment might deposit. One disruption was in the gate area and the other was in the stilling well chamber. In the gate area, an eight inch depression in the side wall of the main line extended for approximately five feet from the regulator gate, while in the stilling well area (not operating for its designed purpose). One foot depression in the side wall extended for approximately three feet. Both areas were void of sediment at the time of inspection, but this absence could be attributed to a heavy rain during the early morning hours. These two spots will be checked again at a time after a sustained dry weather period.

Using the sewer maps provided by the city, the Hendrix Street trunk line was followed away from the plant in an attempt to find suitable sediment sample points. Manholes were inspected within a three block distance from the 26th Ward Plant, and each one revealed a flow too great to find any appreciable sediment. For the first two blocks the sewer is a double trunk line (187 inch) after which it branches out to smaller lines. Some of the 132 inch lines were inspected and they too had too great a flow to have any appreciable sediment. Further inspection was focused on lines between 48 to 54 inches in diameter.

The smaller lines had either very little flow or very little average area or both and were deemed uncharacteristic of the type of sample we attempted to obtain.

In the size range between 48 and 54 inches the lines could be usually inspected from the manholes, and, in almost all cases, the depth of bottom sediment could be observed through the flow (observations done during the daytime off-peak hours).

GM/cve

POST SAMPLING TRIP REPORT NO. 5

Subject: W.O. 4896
Combined Sewer Overflow Pilot Study

Date: June 23, 1981

Place: 26th Ward Water Pollution Control Plant
Van Siclen Avenue
Brooklyn, NY
(Hendrix Street Line and Ditmas Avenue Area)

Present: BRISC Sampling Team
H. Celestino
G. Martin

Purpose: To inspect sewer lines for sediment sample points.

Discussion:

As a result of the inspection on June 22, 1981, a manhole on Schenck Avenue was chosen for a residential dry weather sediment sample. The second manhole south of Linden Boulevard on Schenck Avenue was the manhole chosen. The following details pertain to this sample:

Time: 1100 hours
Time since last rainfall: 36 hours
Ambient temperature: 74°F (23°C)
Sewer diameter: 24" (61 cm)
Flow depth: 2 to 3" (5.1 to 7.6 cm)
Sample code number: 94043

Bottles filled:

1 quart glass (metals analysis)
2 VOA vials (volatile organics analysis)
1 quart glass (extractable organics analysis)
2 pint glass (phenol, cyanide, BOD, TOC)

No further sediment could be obtained from this manhole area. Other analysis such as oil and grease, and solids were not run on this sample, as they would be highly dependent on the volume of sewage left or decanted from the bottles and dipping beaker while obtaining the sample.

Further inspection was then done in the area around Ditmas Avenue. This area has the most concentrated industrial use of the 26th Ward tributary area. All lines from this area feed into the Williams Avenue regulator. Just about all the side street lines serve single industries, or small areas, so they were not investigated. They also were mostly

12 inch (30.5 cm) lines. The line inspected was the main line running down the center of Ditmas Avenue. The line began as a 12 inch (30.5 cm) and increased in size each block up to 72 inches (183 cm). Each manhole was at the intersection of each successive cross street, requiring the rerouting of traffic to inspect any of these manholes. Each manhole inspected showed no signs of sediment.

Another manhole was inspected on Rockaway Avenue (south of Ditmas, first manhole south of overpass). This sewer was a 24 inch (61 cm) line and had a thick sediment layer. The line was also stagnant and the sediment did not appear to be of the type which would wash out with rainfall. This point was rejected for sediment sampling because of the lack of flow. This point may be worth investigating during rainfall for runoff sampling.

A possible industrial catch basin sample point was located at 94th and Ditmas (northeast corner). This catch basin is fed by an industrial area on one side and a residential area on the other and the grating may be removed to facilitate sampling.

Notes which should be made as a result of this inspection/sampling effort:

- The volume of sediment will be very dependent on a number of factors such as: sewer shape, slope, composition, and size; time since last significant rainfall; magnitude of last rainfall; duration of last rainfall; other sewer connections in the vicinity; surface (street) composition in the area; frequency and/or last time of street cleaning; size of manhole (corresponding to accessible length of sewer).

- Normal flow in sewer lines of diameter greater than 40 inches (122 cm) will probably prevent any sediment sampling unless obstructions or changes in pipe profile are such that significant flow restriction will occur with associated sediment depositing.

- Sediment samples taken from a flowing stream should be taken from the downstream area first, working upstream as the downstream deposits are exhausted.

- When opening a manhole for sediment sampling, care should be taken to avoid knocking any surface debris or debris from the manhole frame into the manhole, as this material will contaminate the sample.

GM/sft

POST SAMPLING TRIP REPORT NO. 6

Subject: W.O. 4896
Combined Sewer Overflow Pilot Study

Place: 26th Ward Water Pollution Control Plant
Van Siclen Avenue
Brooklyn, NY

Present: BRISC Sampling Team

H. Celestino
G. Martin

Purpose: To Gather Runoff and Overflow Samples

Date: June 25, 1981

Discussion:

One heavy downpour 1330 on June 25, 1981, provided sufficient rainfall to grab samples covering three of the sampling objectives of this study.

At the start of the rain two grab samples of the flow into a residential catch basin were grabbed. As the rain let up, flow to the 26th Ward Plant increased, causing the Hendrix Street line to overflow, allowing the grabbing of an overflow sample, and an associated influent sample. As the flow to the plant continued to rise, the influent gates were throttled, causing an overflow at the Williams Avenue Regulator. Because of the tidal conditions, separate overflow and influent samples could not be distinguished at the Williams Avenue Regulator so a single overflow/influent sample was grabbed.

Details on the specific samples are as follows.

Catch Basin Samples:

Sample Code Number:	94046
Sample Location:	Catch Basin on Northeast corner of intersection of Van Siclen and Cozine. (North side tributary area)
Time:	1330 Hours
Bottles Filled:	Full Spectrum
Area of Runoff:	Apartment building area, sidewalk, little grass off the edge of apartments; appox. 400 feet of Van Siclen North of Cozine with 2/3 of the width of the street (appox. 50 feet) contributing to the flow; head in parking on the street; area reasonably clean; no construction or other abnormal contributing factors.

Sample Code Number:	94041
Sample Location:	Same as 94046 (above) - South Side Tributary Area
Time:	1335 Hours
Bottles Filled:	Full Spectrum
Area of Runoff:	Same as above (94046) except that the street contribution is from appox. 150 feet of Cozine Avenue east of Van Siclen to the intersection of the two streets, including approx. 1/4 of the intersection.

This Catch Basin feeds directly into the Hendrix Street Interceptor. The rain lasted approximately 15 minutes. The last rainfall prior to this one occurred 3½ days earlier.

Hendrix Street Overflow Sample:

Sample Code Number:	94049
Sample Location:	Center Channel (1 of 5) of overflow structure to Hendrix Street Canal
Time:	1400 Hours
Bottles Filled:	Full Spectrum
Notes:	Sample taken between 5 and 10 minutes after the overflow began.

Hendrix Street Influent Sample:

Sample Code Number:	94044
Sample Location:	Influent Channel to high level wet well at 26th Ward Plant
Time:	1430 Hours
Bottles Filled:	Full Spectrum
Notes:	Sample taken immediately after taking overflow sample.

Williams Avenue Regulator Sample:

Sample Code Number:	94050
Sample Location:	Williams Avenue Interceptor just upstream of the regulator gate
Time:	1500 Hours
Bottles Filled:	Full Spectrum
Notes:	As the sample was being completed at the high level wet well (94044), plant personnel informed the sampling personnel that they were throttling the low level influent gate. This action initiates the back up in the Williams Avenue Interceptor, and corresponding overflow. Upon arrival at the Williams Avenue Regulator, the Sampling crew found that the interceptor had backed up, but that due to the tide level (high tide at 1442) both sides of the tide gates were submerged and separate samples of the overflow and the influent to the plant were not possible. A single sample of the flow at the regulator gate was grabbed and shall be considered as equivalent to both the influent and the overflow at the time of sampling.

Notes which should be made as a result of this sampling effort:

- Catch basin Sampling/Selection cannot be completely planned in advance. General areas can be chosen as desired locations, but individual catch basins cannot be chosen during dry weather periods. Initial surveillance by this sampling crew located a pair of intersections (Van Siclen and Cozine; Van Scilen and Wortman) with what appeared to be likely candidate catch basins. During the rain storm, one basin (of eight at these two intersections) was chosen. Six of the eight catch basins flooded shortly after the rain began, renderding them useless under two to ten inches of stagnent runoff. Other catch basins in the same general area illustrated another problem of pre-rain selection: no flow during rainfall. Some of the catch basins may have appeared to serve an area of which the runoff would be of interest, but when it rained, the flow either went in other directions or didn't flow into the catch basin but into surrounding areas. This was often due to road constuction, repavement, changes in the nearby area (abandonment, fire, etc), or even obstructions from debris or parked vehicles.

- Regulators may appear to be ideal sampling locations under normal flow periods, but they must be checked out during high flow/rainfall periods before they can be depended upon for wet weather points. The regulator chamber at Williams Avenue is a prime example of this fact, as the normal flow remains in a 60 inch (152 cm) line at a depth of 10-30 inches (25-76 cm). The chamber is inoperative at this time with the flow controlled by the influent gates at the plant. When the influent gate closes, the flow backs up to a level which is highly dependent on the tide level. During this sample episode, the tide and the back-up occurred concurrently, flooding the regulator chamber under 6-8 feet (1.8-2.4 m) of sewage. This point is not applicable for sampling under such conditions.

- Catch basin sampling to see the "first flush" runoff will have to be done as soon as the rain begins. This will require being in the vicinity of the catch basin when the rain begins with the samples grabbed on this sampling episode. The runoff samples only lasted for approximately 15 minutes which required being at the point, as soon as, if not immediately after, the rain began. This situation may require different samplers at different catch basins to obtain the necessary samples.

GM/cve

POST SAMPLING TRIP REPORT NO. 7

Subject: W.O. 4896
Combined Sewer Overflow Pilot Study

Place: 26th Ward Water Pollution Control Plant
Van Siclen Avenue, Brooklyn, N.Y.

Present: BRISC
P. Lanik
H. Celestino
G. Martin

Purpose: To Collect Storm Water Runoff and Overflow Samples. Inspection of In-stream Regulating Controls.

Date: July 28, 1981

Discussion:

Rain was predicted to start at approximately 1700 hours and continue through the morning of July 29.

During this predicted rainfall: sampling efforts would be concentrated on the collection of industrial area runoff (catchbasin sampling). A location was selected at the intersection of Ditmas and East 92nd Street. The catchbasins which would be sampled are located on the southwest and northeast corners of the intersection. The catchbasin cover was removed from the catchbasin on the southwest corner in anticipation of the rainfall (removed at 2230 hr).

Upon arrival in Brooklyn, investigations of the sewage system were made prior to the predicted rainfall. Two locations within the 26th Ward system are self-controlled overflows. For example, dry weather flow is routed through a separate sewage piping network and is treated after passing through the Hendrix Street regulator. During wet weather flow at these same locations (Linden Blvd. and Louisiana Ave., Wortman and New Jersey Avenue) it is assumed that if the flow is above a specific level, the storm water flow or surcharge flow is bypassed over a diversion into the Williams Avenue regulated system. As a result of these investigations, it was not evident that the diversion chambers could be visually inspected from the access manholes. However, approximately 12 manholes were open during this investigation and were evaluated for possible sediment sampling.

From these 12 manhole inspections two were considered. They were (1) Linden between Louisiana & Molta (a 12" line which is located between the first and second lanes of the Linden westbound traffic flow). (2) On New Jersey south of Wortman (a 126" line at the intersection of New Jersey on the south side of Wortman).

The sampling effort for this rainfall event was terminated at 0030 hours on 7/29/81 due to a lack of sufficient rainfall.

Rainfall concentration for 7/28/81 to 7/29/81:

Period (Hrs)	Inches of Rainfall
2242 to 0032	0.05
0144 to 0230	Trace
0240 to 0315	0.02

(Readings are recorded from J.F.K. Airport.)

Note: Hightide approximately 1.4 feet above normal. Stop logs were being installed on non-working tide gates at the Williams Avenue regulator.

HC/cve

POST SAMPLING TRIP REPORT NO. 8

Subject: W.O. 4896
Combined Sewer Overflow - Pilot Study

Place: 26th Ward S.T.P.
Brooklyn, New York

Date: August 8, 1981

Present: B&R Sampling Team

H. Celestino
T. Fieldsend

Purpose: CSO Sampling in New York 26th Ward

Discussion:

Sampling efforts were focussed on the collection of runoff rain water.

Four samples were collected during this rainfall event. All of the samples were collected from the industrial section of the 26th Ward tributary area. Samples with code numbers 94028, 94032, 94033, 94052 were collected at the intersection of Ditmas and 92nd Street.

Sample 94033 represents runoff into the catch basin on the northwest corner of the intersection (Ditmas runoff). Sample 94052 represents runoff into the catch basin on the northeast corner of the intersection (92nd Street runoff). Samples 94028 and 94032 represent the runoff into the catch basin on the southwest corner of the intersection (Ditmas and 92nd Street runoff, respectively).

HC/sft

POST SAMPLING TRIP REPORT NO. 9

Subject: W.O. 4896
Combined Sewer Overflow Pilot Study

Place: Newark (P.V.S.C.)

Present: BRISC
H. Celestino
P. Sisovsky
G. Martin (part time)
J. LaFond
M. Surdovel (part time)
B. Ligerman (part time)

Purpose: C.S.O. Background Sampling (5 Days)

Date: August 14, 1981

Sampling Period No.		
	1	August 17, 0800 hrs. - August 18, 0800 hrs.
	2	August 18, 0800 hrs. - August 19, 0800 hrs.
	3	August 19, 0800 hrs. - August 20, 0800 hrs.
	4	August 20, 0800 hrs. - August 21, 0800 hrs.
	5	August 21, 0800 hrs. - August 22, 0800 hrs.

Sample Point and Frequencies - See Table No. 1

Sample Point Description

Three sample locations were sampled for the five day background sampling program in Newark (Saybrook Place, Rector Street and Herbert Street). The Saybrook Place regulator is fed by two sewer lines. The larger line is a 75" diameter while the second is a 48" diameter sewer line. The Rector Street regulator is fed by a 66" diameter sewer line while the Herbert Street regulator is fed by a 48" diameter sewer line.

At all three locations automatic samplers were used to collect the 24 hour composite samples. A piece of 1" aluminum conduit was positioned at each of the three locations so that the submerged end of the conduit was parallel and facing into the flow. The end of the conduit was positioned prior to the flow's entry into the sand catcher chamber. Teflon tubing was then placed inside the aluminum conduit extending 2 to 3" past the end of the conduit. Samplers were placed adjacent to the manhole covers and covered with a 55 gallon drum. Concurrently, grab samples were taken every four hours at each of the three locations. Flow measurements (velocity and depth) were also taken every four hours from the four tributary lines.

Grab Samples - Single Grabs

A grab sample, for all the parameters, of the tap water was taken during the fourth sampling period.

QA/QC Samples

During the first sampling period, duplicate extractable samples were taken at each of the three sample locations.

Blank Sample Schedule

Three pairs of VOA trip blanks were taken at each sample location along with a metals and sampler blank. These samples were all taken prior to period No. 1.

Summary of Operations

Flow data was collected from four locations - two at Saybrook Place, one at Rector Street, and one at Herbert Street. Measurements for velocity and depth of flow were taken every four hours along with the grab samples. The recorded data is as follows:

	1200 Hrs.				1600 Hrs.				2000 Hrs.				2400 Hrs.				0400 Hrs.				0800 Hrs.			
	d(in)	Vel	d(in)	Vel	d(in)	Vel	d(in)	Vel	d(in)	Vel	d(in)	Vel	d(in)	Vel	d(in)	Vel	d(in)	Vel	d(in)	Vel	d(in)	Vel	d(in)	Vel
Saybrook Place																								
Day 1	-	-	-	-	4.5	6.0	2.5	8.0	3.4	5.4	3.0	1.5	-	-	-	-	-	-	-	-	-	-	-	-
2	4.4	6.0	2.3	0.8	-	-	-	-	3.4	5.4	3.0	1.5	5.3	4.8	1.1	1.5	-	-	1.0	0.8	-	-	-	-
3	4.75	5.0	2.0	1.9	4.0	5.8	2.4	2.0	4.5	6.4	1.6	1.2	5.25	6.2	-	-	3.4	4.5	-	-	4.5	3.4	-	-
4	4.5	4.8	-	-	4.25	4.8	-	-	2.5	5.2	-	-	5.4	5.5	-	-	4.6	5.2	-	-	5.5	3.5	-	-
5	3.4	5.6	-	-	3.75	5.8	-	-	4.4	6.8	-	-	2.6	6.0	-	-	3.75	6.0	-	-	-	-	-	-
Rector Street																								
Day 1	-	-			1.5	5.0			1.5	3.0			-	-			-	-			-	-		
2	-	-			1.5	5.0			1.5	3.0			1.5	4.5			2.1	5.5			1.5	3.0		
3	2.0	4.0			2.0	4.0			2.6	2.5			4.0	4.5			1.5	4.2			2.2	3.5		
4	1.5	4.0			2.4	5.0			2.75	5.6			3.75	4.8			5.5	4.0			4.5	5.0		
5	2.4	4.8			3.75	5.6			4.0	4.5			2.75	4.3			4.0	3.3			2.5	4.0		
Herbert Street																								
Day 1	-	-			-	-			1.5	3.0			-	-			-	-			-	-		
2	-	-			2.4	5.2			2.75	3.5			-	-			1.0	2.5			2.5	2.5		
3	1.0	4.0			0.75	4.0			0.75	8.0			1.5	1.7			1.25	2.7			-	-		
4	3.5	4.0			1.75	5.0			3.0	4.0			1.4	5.1			-	-			1.6	4.4		
5	3.0	5.8			3.0	5.2			3.0	5.2			1.25	3.5			1.9	4.0			2.0	2.0		

	1200		1600		2000		2400		0400		0800	
	Flow*	Flow	Flow	Flow	Flow	Flow	Flow	Flow	Flow	Flow	Flow	Flow
Saybrook Place												
75" ø Day 1	--	--	3.57	2.00	2.10	0.49	--	--	--	--	--	--
2	3.42	0.17	--	--	2.10	0.49	3.71	0.11	--	0.05	--	--
3	3.22	0.34	2.90	0.46	3.81	0.16	4.62	--	1.75	--	2.02	--
4	2.86	--	2.63	--	1.30	--	4.25	--	3.22	--	2.79	--
5	2.18	--	2.64	--	3.88	--	1.61	--	2.73	--	--	--
Rector Street												
66" ø Day 1	--		0.58		0.35		--		--		--	
2	--		0.58		0.35		0.53		1.08		0.35	
3	0.72		0.72		0.67		2.25		0.49		0.75	
4	0.47		1.56		1.61		2.18		3.19		2.97	
5	1.11		2.55		2.25		1.24		1.65		1.00	
Herbert Street												
48" ø Day 1	--		--		0.35		--		--		--	
2	--		1.20		1.01		--		0.16		0.62	
3	0.25		0.17		0.33		0.20		0.24		--	
4	1.64		0.73		1.31		0.52		--		0.58	
5	1.90		1.70		1.70		0.03		0.65		0.36	

* Units of Flow Are CFS

Weather Conditions

During the five day sampling program clear skies and warm weather prevailed. Temperatures ranged from 72°F to 80°F during the day and fell to 63°F to 70°F at night.

Sampling Operations

All sampling was conducted on schedule. Some abnormalities were experienced and are explained in the daily occurrence table below.

Sample Point	Day	Time (hrs)	Description
Saybrook	2	1200	Sampler was moved and tubing disconnected.
Rector	2	1200	Sampler was moved and tubing disconnected.
		1600	Two traffic cones stolen.
		0850	Sampler clogged.
Herbert	2	1200	Tubing severed, no sample.
Saybrook	3	0115	Manhole cover broke, pieces in sewer line obstructing flow.
Rector	3	1600	Sampler clogged.
	3	0100	Sampler clogged.
Rector	4	2100	Sampler clogged.
Rector	5	1200	Sampler clogged.
		1600	Sampler clogged.
		1600	Stolen traffic cone.

Sample Shipments

Sample	Laboratory	Carrier
Water Organics	EPA Region VII	Federal Express
Water Metals	EPA Region VII	Federal Express
All Conventionals	Burns and Roe Labs	Hand Delivered

TABLE 1

Sample Point	Collection Method	Grab Frequency	Composite Sample	Collection Interval[1]	Duration
Saybrook Place	Automatic Sampler	6 times daily	24 hours	245 ml/15 min : 125 ml/19 min	5 days
Rector Street	Automatic Sampler	6 times daily	24 hours	260 ml/15 min : 110 ml/18 min	5 days
Herbert Street	Automatic Sampler	6 times daily	24 hours	220 ml/13 min : 130 ml/20 min	5 days
Tap Water	Grab	Single Grab	24 hours	---	Day 4 only

(1) Larger Aliquots for Day 1 Only.

TABLE 2

Sample Code	Sample Location	Sample Period	No. of Grabs
94162	Saybrook Place	1	6
94161	Rector Street	1	6
94163	Herbert Street	1	6
94165	Saybrook Place	2	6
94164	Rector Street	2	6
94166	Herbert Street	2	6
94168	Saybrook Place	3	6
94167	Rector Street	3	6
94169	Herbert Street	3	6
94171	Saybrook Place	4	6
94170	Rector Street	4	6
94172	Herbert Street	4	6
94176	Tap Water	4	1
94174	Saybrook Place	5	6
94173	Rector Street	5	6
94175	Herbert Street	5	6

POST SAMPLING TRIP REPORT NO. 10

Subject: W.O. 4896
Combined Sewer Overflow-Pilot Study

Place: Newark, NJ

Present: BRISC
H. Celestino
G. Martin

Purpose: Collection of Combined Sewer Overflow Sample

Date: September 8, 1981

Discussion:

Rainfall was predicted for the metropolitan area throughout the day. After a few hours of no rain, a visit was made to the weather station at Newark Airport. While at the weather station we were given a tour and an explanation of the climatological apparatus. With rain gauging being one of our major concerns, we asked to see their rain gauge apparatus. This facility uses three types of rain gauge instruments. The first is a recording chart rain gauge that can be set up with various gears to complement reading durations. The second and third rain gauges are manual reading gauges. Specifically sized readings from both gauges can be calculated to obtain rainfall in inches/hour. Finally, prior to leaving the watch chief, he gave us his weather prediction for the remainder of the day, which was little to no rain with total accumulations of up to about 5/100 of an inch.

No samples were collected during this effort.

HC/cve

POST SAMPLING TRIP REPORT NO. 11

Subject: W.O. 4896
Combined Sewer Overflow - Pilot Study

Place: Newark, New Jersey

Present: B&R
H. Celestino
G. Martin

Purpose: Combined Sewer Overflow Sampling

Date: September 15, 1981

Discussion:

During this storm event, the sampling concentration was directed to the collection of runoff storm water. A total of five grab samples were collected. Two samples of runoff, two samples of combined sewer overflow, and one sample of the flow in the sewer line. Specifically, sample No. 94100 was collected from a catch basin on the northwest corner of Route 21 and Saybrook Place. This sample represents runoff from Route 21 and Saybrook Place north and east of the catch basin.

Sample No. 94110 is representative of the runoff from Routh 21 entering directly into the sand catcher chamber through the manhole cover.

Sample No. 94109 was collected to represent the flow in the sewer as it enters the sand catcher chamber (regulator). Overflow samples (No. 94102 and 94108) were collected from the Saybrook Place and Herbert Street sand catcher chambers.

Rainfall Occurrence

Start Time	Stop Time	Sample Times
1115	1140	1130 to 1145
1400	1500	1445

POST SAMPLING TRIP REPORT NO. 12

Subject: W.O. 4896
Combined Sewer Overflow-Pilot Study

Place: Newark, NJ

Present: BRISC
H. Celestino
G. Martin

Purpose: To compare velocity measuring equipment during wet weather conditions.

Date: September 16, 1981

Discussion:

In view of the rainfall on September 15, 1981, the field exercises for this predicted rainfall would be focussed on wet weather flow/velocity measurement comparisons. Equipment was made ready at both Saybrook Place and Rector Street. Flow measurements would be taken from the sewer line through the first manhole upstream of the sand catcher chambers.

Predicted rains did not prevail. Consequently, there were no flow comparisons conducted.

HC/cve

POST SAMPLING TRIP REPORT NO. 13

Subject: W.O. 4896
Combined Sewer Overflow Pilot Study

Place: Newark, NJ

Date: October 1, 1981

Present: B&R Sampling Team
H. Celestino
G. Martin
J. LaFond
J. Arnold
C. Dunleavy

Purpose: CSO Sampling in Newark.

Discussion:

Heavy rains were predicted for the afternoon. Sampling apparatus was set up at Saybrook and Rector Streets. A background sample was taken at each location prior to the start of the rainfall. Clearing skies and sunshine after about 4-1/2 hours prompted the termination of this sampling effort. Background samples taken during this effort were destroyed.

HC/sft

POST SAMPLING TRIP REPORT NO. 14

Subject: W.O. 4896
Combined Sewer Overflow

Place: Newark (P.V.S.C.)

Present: BRISC Sampling Team

H. Celestino	P. Sisovsky
P. Lanik	M. Surdovel
G. Martin	J. Arnold
B. Dunphy	J. LaFond

Purpose: C.S.O. Sampling in Newark, NJ

Date: October 6, 1981

Discussion:

Better than 80 percent chance of rain was predicted for early afternoon. Showers would continue through early evening. The sampling crew arrived at 1300 hours. Clearing skies and sunshine dominated later in the afternoon (1600 hours). Sampling effort was called off.

HC/cve

POST SAMPLING TRIP REPORT NO. 15

Subject: W.O. 4896
Combined Sewer Overflow

Place: Newark (P.V.S.C.)

Date: October 23, 1981

Present: BRISC Sampling Team
H. Celestino
G. Martin
P. Lanik
W. Dunphy
V. Johnson
M. Surdovel
J. LaFond
J. Arnold
C. Dunleavy

Purpose: C.S.O. Sampling in Newark, NJ

Discussion:

Sampling efforts commenced at 1015 hours at the Saybrook and Rector sampling locations. A set of background samples were collected from Saybrook and Rector sewer lines. Rain gauges and rain catchers were also positioned at these locations. Flow measurements, depth and velocity were taken in association with the background samples.

The rainfall pattern for this event consisted of light rain (drizzle) with intermittent periods of heavier rainfall.

Starting at 1330 hours, field crews collected the first of 24 first flush samples at both sample locations. Half-gallon plastic and quart glass bottles were collected every five minutes for a 2-hour period.

At 1445 hours, the first overflow sample was collected from the Rector overflow chamber. Additional sample sets were collected at 15-minute intervals until 1630 hours. A combined sewer flow sample was collected at 1600 hours to correspond with the combined sewer overflow samples.

A composite sample of the collected rainfall was distributed among a set of bottles and the sample bottles were was sent to their respective laboratories for analysis.

First Flush - The determination of samples to be included with first flush was governed by plotting the concentration of settleable solids for the samples collected during the 2-hour sampling period. Those samples indicative of the first peak in solids concentration were included for first flush (see Graphs #1 and #2). Additionally,

concentration values for the settled grit was plotted to verify the results of the settleable solids graph. The samples selected for the first flush were numbers 1 through 7 (Saybrook) and 25 through 31 (Rector).

Included in Graphs #1 and #2 are the results of the laboratory analysis for total solids, total suspended solids, settleable solids, and settled grit. On both graphs, the curves for settleable solids and settled grit reflect the rainfall pattern for this storm event. However, it is evident that on Graph #2 this relationship is much better for the 2-hour period. Consequently, the relationship of concentrations for the 2-hour period on Graph #2 could be related to the greater increase in flow and overflow occurrence at the Rector Street chamber. To further substantiate the concentration versus time relationships, additional laboratory analysis for total solids and total dissolved solids were run. These data, when plotted (see Graphs #1 and #2), reinforce the relationships indicated by the settleable solids and settleable grit curves.

Flow data associated with the first seven first flush samples (35 minutes) reveal a definite peaking effect. Recorded data after this point, for both locations, indicate a possible diurnal effect on the readings.

Field Data - The recorded rainfall for the period between 1030 hours and 1815 hours was 0.5 inches.

HC/sft

The following are the recorded flow depths, calculated flows, and times taken during the sampling effort:

		Flow Level		Time		Flow (CFS)	
		Saybrook	Rector	Saybrook	Rector	Saybrook	Rector
Background		4.75	3.50	1120	1125	2.4392	1.4218
Sample No.							
1	25	4.25	3.75	1320	1325	1.9221	1.6438
2	26	4.875	4.00	1330	1330	2.5787	1.8930
3	27	5.00	4.25	1335	1335	2.7222	2.1553
4	28	5.00	4.50	1340	1340	2.7222	2.4357
5	29	5.50	4.75	1345	1345	3.3375	2.7342
6	30	5.25	4.50	1350	1350	3.0217	2.4357
7	31	5.125	4.50	1355	1355	2.8699	2.4357
8	32	5.00	4.00	1400	1400	2.7222	1.8930
9	33	4.75	4.50	1405	1410	2.4392	2.4357
10	34	4.50	5.00	1410	1415	2.1725	3.0509
11	35	4.75	5.00	1415	1420	2.4392	3.0509
12	36	5.00	5.50	1420	1425	2.7222	3.7390
13	37	5.25	6.50	1425	1430	3.0217	5.3359
14	38	5.25	6.75	1430	1435	3.0217	5.7814
15	39	5.50	7.00	1435	1440	3.3375	6.2454
16	40	5.75	7.50	1440	1445	3.6699	7.2292
17	41	6.00	7.75	1445	1450	4.0189	7.7491
18	42	6.00	7.50	1450	1500	4.0189	7.2292
19	43	6.50	7.50	1455	1505	4.7668	7.2292
20	44	7.00	7.50	1500	1510	5.5816	7.2292
21	45	6.75	7.50	1505	1515	5.1659	7.2292
22	46	6.75	7.75	1510	1520	5.1659	7.4868
23	47	7.25	7.75	1515	1525	6.0142	7.4868
24	48	6.75	7.25	1520	1545	5.1659	6.7280
		7.00	7.00	1525	1600	5.5816	6.2454
		7.00		1530		5.5816	
		8.00		1545		7.4129	
		8.00		1600		7.4129	6.2454
		8.125		1615		7.6607	
		8.00		1630		7.4129	

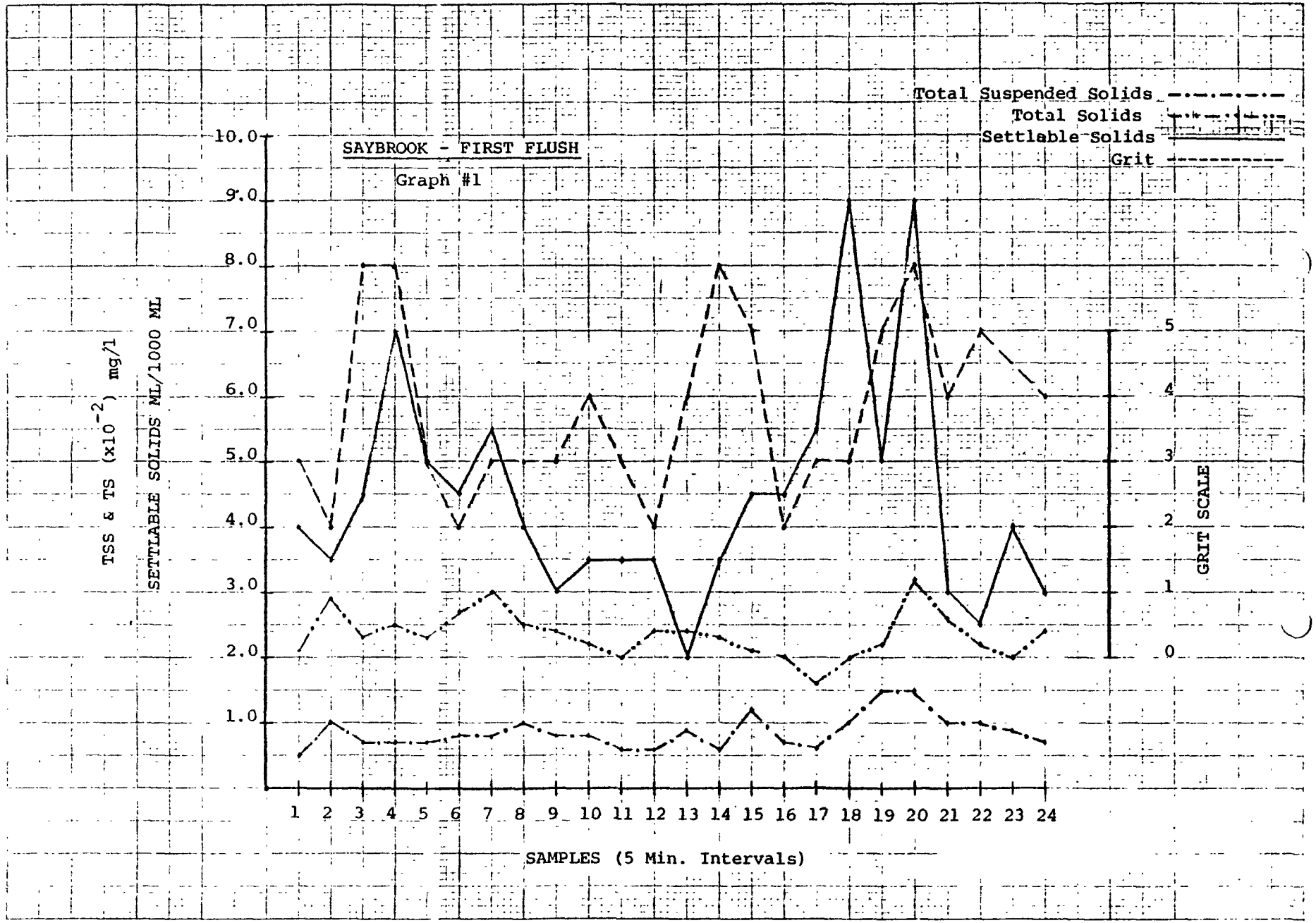
SAYBROOK - FIRST FLUSH
Graph #1
Total Suspended Solids
Total Solids
Settlable Solids
Grit
TSS & TS (x10^{-2}) mg/l
SETTLABLE SOLIDS ML/1000 ML
GRIT SCALE
10.0
9.0
8.0
7.0
6.0
5.0
4.0
3.0
2.0
1.0
5
4
3
2
1
0
1 2 3 4 5 6 7 8 9 10 11 12 13 14 15 16 17 18 19 20 21 22 23 24
SAMPLES (5 Min. Intervals)

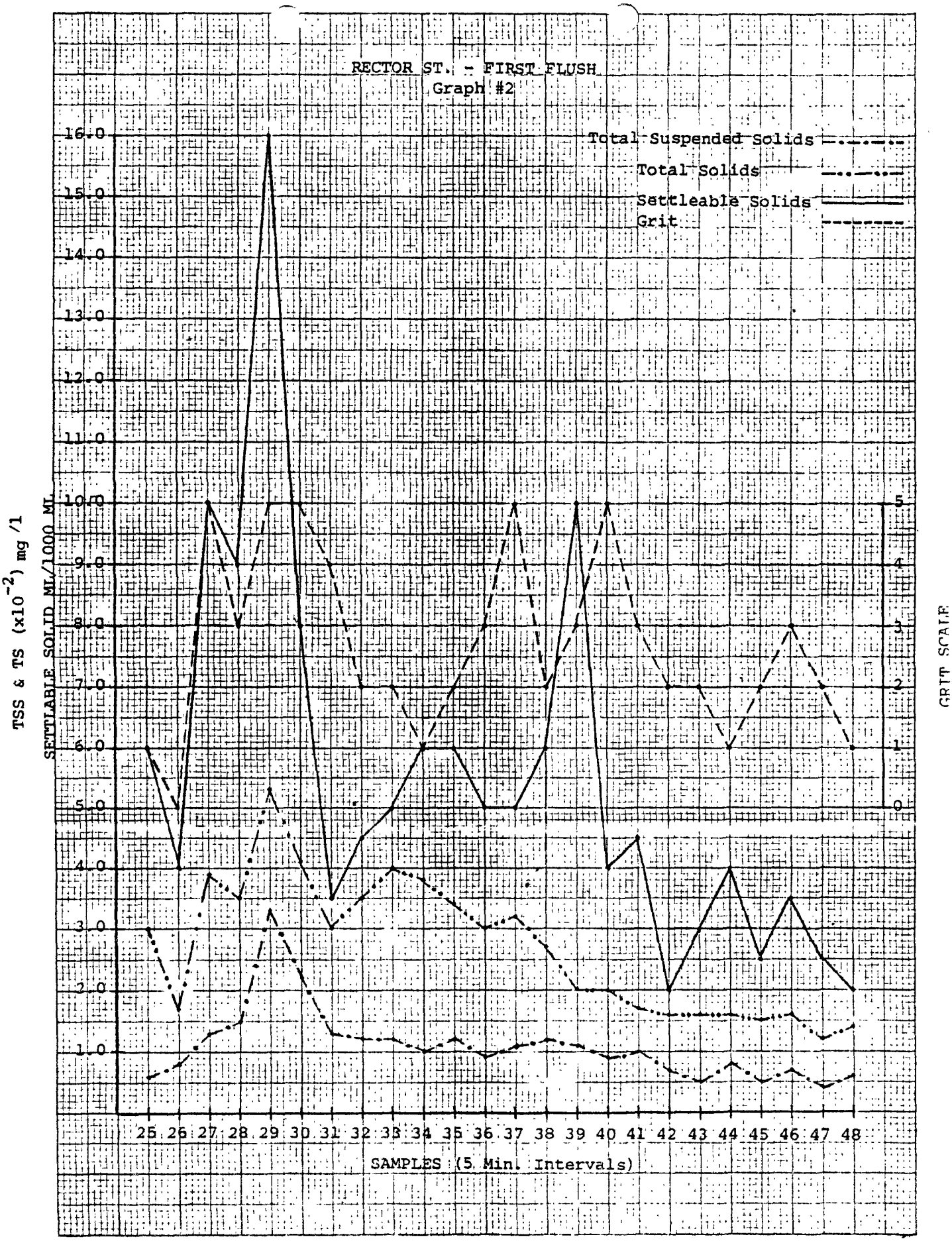
RECTOR ST. - FIRST FLUSH
Graph #2
Total Suspended Solids
Total Solids
Settleable Solids
Grit
TSS & TS (x10^{-2}) mg/l
SETTLEABLE SOLID ML/1000 ML
GRIT SCALE
16.0
15.0
14.0
13.0
12.0
11.0
10.0
9.0
8.0
7.0
6.0
5.0
4.0
3.0
2.0
1.0
5
4
3
2
1
0
25 26 27 28 29 30 31 32 33 34 35 36 37 38 39 40 41 42 43 44 45 46 47 48
SAMPLES (5 Min. Intervals)

SAYBROOK & RECTOR
SEWER FLOW
GRAPH #3
Rector
Saybrook
FLOW (C.F.S.)
10.0
9.0
8.0
7.0
6.0
5.0
4.0
3.0
2.0
1.0
1 2 3 4 5 6 7 8 9 10 11 12 13 14 15 16 17 18 19 20 21 22 23 24
(5 Minute Intervals)

TABLE 1

Sample Code	Sample Location	Time	Sample Date	No. of Grabs
94101	Saybrook (first flush)	Composite	10/23/81	7
94103	Rector (background)	1015	10/23/81	1
94104	Rainfall	1630	10/23/81	1
94105	Rector (overflow)	1445	10/23/81	1
94111	Rector (overflow)	1515	10/23/81	1
94116	Rector (overflow)	1500	10/23/81	1
94117	Rector (overflow)	1530	10/23/81	1
94118	Rector (overflow)	1545	10/23/81	1
94119	Rector (background)	1600	10/23/81	1
94120	Rector (first flush)	Composite	10/23/81	7
94122	Saybrook (background)	1015	10/23/81	1
94125	Rector (overflow)	1600	10/23/81	1
94140	Saybrook (first flush)	1350	10/23/81	1
94146	Rector (first flush)	1350	10/23/81	1

Note: Sample Code Numbers 94140 and 94146 consist of VOA's only.

POST SAMPLING TRIP REPORT NO. 16

Subject: W.O. 4896
Combined Sewer Overflow

Place: Newark (PVSC)

Date: December 1, 1981

Present: BRISC Sampling Team
Paul Lanik
Jeff Arnold
John LaFond
Bill Dunphy

Purpose: C.S.O. sampling in Newark

Discussion:

Sampling commenced at 1330 hours at the Herbert Street overflow chamber. Complete sets of samples were collected every 15 minutes, from 1330 hours through 1515 hours.

At 1600 hours, the sampling crew arrived at the Rector/Saybrook sampling location. A visual inspection of the flow condition was conducted at the Rector overflow chamber and then the Saybrook overflow chamber. The Rector Street chamber was already overflowing at the time the sampling crew arrived. Sampling commenced immediately (1630 hours) at the Rector Street location. Four sample sets were collected at 15 minute intervals from the Rector Street overflow.

Continuous checks of the flow conditions in the Saybrook chamber were conducted during the sampling at Rector Street. At 1700 hours, the flow increased enough to cause an overflow. Eight sample sets were collected at 15 minute intervals commencing at 1700 hours.

A precipitation sample was collected for this storm event. The precipitation collector was first set out at the Herbert Street location and then at the Saybrook/Rector location. A composite sample was made from the precipitation collected at both locations.

During this sampling, PVSC closed the regulator gates at 1603 hours at the Rector Street chamber and 1600 hours at the Saybrook chamber. Both regulator gates were closed through the sampling periods.

HC/sft

TABLE 1

Sample Code	Sample Location	Time	Sample Date	Number of Grabs
94138	Rector Street	1630	12/1/81	1
94156	Rector Street	1645	12/1/81	1
94123	Rector Street	1700	12/1/81	1
94158	Rector Street	1715	12/1/81	1
94115	Saybrook Place	1700	12/1/81	1
94114	Saybrook Place	1715	12/1/81	1
94113	Saybrook Place	1730	12/1/81	1
94121	Saybrook Place	1745	12/1/81	1
94112	Saybrook Place	1800	12/1/81	1
94157	Saybrook Place	1815	12/1/81	1
94106	Saybrook Place	1830	12/1/81	1
94124	Saybrook Place	1845	12/1/81	1
94136	Saybrook/Herbert	1900	12/1/81	1 (Precipitation)
94154	Herbert	1330	12/1/81	1
94155	Herbert	1345	12/1/81	1
94139	Herbert	1400	12/1/81	1
94152	Herbert	1415	12/1/81	1
94159	Herbert	1430	12/1/81	1
94107	Herbert	1445	12/1/81	1
94160	Herbert	1500	12/1/81	1
94153	Herbert	1515	12/1/81	1

APPENDIX B

ANALYTICAL RESULTS

ANALYTICAL RESULTS

B-1	Dry Weather Background Sampling - 26th Ward
B-2	Storm 1 (11 May 1981) Results - 26th Ward
B-3	Storm 2 (25 June 1981) Results - 26th Ward
B-4	Storm 3 (8 Sugust 1981) Results - 26th Ward
B-5	Dry Weather Background Sampling - Newark, NJ
B-6	Storm 1 (15 September 1981) Results - Newark, NJ
B-7	Storm 2 (23 October 1981) Results - Newark, NJ
B-8	Storm 3 (1 December 1981) Results - Newark, NJ

TABLE B-1. DRY WEATHER BACKGROUND SAMPLING - 26TH WARD

Parameter	Units	Tap Water (94008)	INFLUENT 4/24 (94000)	4/25 (94002)	4/26 (94004)	4/27 (94006)	4/28 (94015)	4/29 (94016)	4/30 (94017)	GRAVITY THICKENER OVERFLOW 4/24 (94001)	4/25 (94003)	4/26 (94005)	4/27 (94007)	4/28 (94012)	4/29 (94013)	4/30 (94014)
Conventional/ Nonconventional																
BOD5	mg/l	2	150	150	170	180	240	150	200	65	80	80	90	95	60	1500
COD	mg/l	4	560	550	560	360	540	280	330	320	256	360	280	180	150	2960
TOC	mg/l	4	63	73	87	169	130	80	83	30	61	103	56	63	45	420
Total Solids	mg/l	70	2940	3000	2930	2870	6350	2740	2460	2760	2640	2540	2230	2330	2420	4320
Total Volatile Solids	mg/l	40	450	530	510	610	550	520	530	450	440	540	440	440	420	1820
Total Suspended Solids	mg/l	0	100	11	83	153	207	107	171	40	37	65	80	84	27	1920
Total Vol. Sus. Solids	mg/l	0	60	60	50	93	113	67	114	30	27	40	57	40	20	1220
Total Dissolved Solids	mg/l	82	2960	2910	2570	2400	2170	2710	1600	2670	2570	2770	2200	2200	2450	1980
Total Vol. Dis. Solids	mg/l	48	610	510	480	450	1160	507	1130	530	510	540	460	640	483	1420
Settleable Solids	mℓ/ℓ	<0.1	3.4	2.0	2.8	3.1	5.0	1.7	4.5	0.3	0.3	2.6	0.9	0.3	<0.1	52
Chloride	mg/l	NS	NS	NS	NS	NS	NS	NS	NS	NS	NS	NS	NS	NS	NS	NS
Ammonia Nitrogen	mg/l	<1	8	9	8	8	10	7	6	NS	11	9	11	9	12	8
Oil and Grease	mg/l	6	34	31	26	27	31	26	34	3	10	6	10	12	4	124
Total Phenol	ug/l	4	16	21	60	19	21	34	31	4	3	12	24	25	10	31
Volatiles																
Benzene	µg/l	ND	0.4	ND	ND	ND	ND	0.4	ND	ND	ND	ND	ND	ND	ND	ND
Bromomethane	µg/l	ND	ND	3.0	ND	ND	3.0	36	49	ND	ND	ND	ND	3.0	7.0	ND
Chlorobenzene	µg/l	ND	0.3	0.2	0.3	ND	0.6	0.3	ND	ND	ND	ND	ND	ND	ND	0.2
Chloroform	µg/l	24	3.0	6.0	5.0	6.0	5.0	7.0	4.0	4.0	4.0	5.0	4.0	5.0	4.0	0.4
Chloromethane	µg/l	ND	ND	5.0	ND	ND	ND	ND	ND	ND	ND	ND	ND	ND	ND	6.0
1,1-Dichloroethane	µg/l	ND	0.9	0.2	0.4	0.3	0.3	0.600	0.8	ND	ND	ND	0.2	0.3	0.3	1.0
1,1-Dichloroethylene	µg/l	ND	ND	0.2	ND	0.4	0.2	0.5	0.4	ND	ND	ND	ND	0.2	ND	ND
Trans-1,2-Dichloroethylene	µg/l	ND	14	9.0	9.0	10	5.0	8.0	13	5.0	5.0	4.0	6.0	5.0	6.0	61
Trans-1,3-Dichloropropane	µg/l	ND	ND	ND	ND	ND	ND	0.3	ND	ND	ND	ND	ND	ND	ND	ND
Ethylbenzene	µg/l	ND	1.0	0.5	0.7	0.9	0.4	1.0	1.0	ND	ND	ND	0.3	0.4	ND	0.8
Methylene chloride	µg/l	0.5	25	0.9	0.4	0.8	1.0	1.0	0.8	2.0	0.6	0.5	0.9	1.0	0.7	0.7
Tetrachloroethene	µg/l	ND	8.0	14	12	17	ND	ND	ND	ND	ND	ND	ND	ND	ND	ND
1,1,1-Trichloroethane	µg/l	ND	1.0	1.0	1.0	2.0	2.0	3.0	4.0	2.0	6.0	ND	2.0	2.0	2.0	ND
1,1,2-Trichloroethane	µg/l	ND	ND	ND	ND	ND	ND	ND	ND	ND	ND	ND	ND	ND	ND	ND
Trichloroethylene	µg/l	ND	18	20	11	21	12	19	19	33	10	6.0	18	12	25	9.0
Toluene	µg/l	ND	11	3.0	ND	17	ND	6.0	10	ND	ND	0.3	0.7	ND	0.3	18
Vinyl chloride	µg/l	ND	ND	6.0	8.0	9.0	ND	ND	ND	ND	ND	ND	ND	ND	ND	27
Bromodichloromethane	µg/l	4.0	ND	3.0	5.0	2.0	3.0	ND	ND	ND	ND	ND	ND	3.0	ND	ND
1,1,2,2-Tetrachloroethene	µg/l	ND	8.0	14	12	17	11	14	9.0	10	12	8.0	13	11	ND	7.0
1,1,2,2-Tetrachloroethane	µg/l	ND	ND	ND	ND	ND	ND	0.3	ND	ND	ND	ND	ND	ND	12	ND

NS - Not sampled
< - Less than
ND - Not detected

TABLE B-1. DRY WEATHER BACKGROUND SAMPLING - 26TH WARD

Parameter	Units	Tap Water (94008)	INFLUENT 4/24 (94000)	4/25 (94002)	4/26 (94004)	4/27 (94006)	4/28 (94015)	4/29 (94016)	4/30 (94017)	GRAVITY THICKENER OVERFLOW 4/24 (94001)	4/25 (94003)	4/26 (94005)	4/27 (94007)	4/28 (94012)	4/29 (94013)	4/30 (94014)
Acids*																
Base/Neutrals																
Benzo-a-anthracene	µg/l	ND	ND	ND	ND	ND	3.4	ND	ND	ND	ND	ND	ND	10	5.5	ND
Benzo(g,h,i) perylene	µg/l	ND	ND	ND	ND	ND	16	ND	ND	ND	ND	ND	ND	9	ND	ND
Bis(2-ethylhexyl) phthalate	µg/l	ND	ND	ND	ND	ND	ND	2.3	ND	ND	ND	ND	ND	18	ND	11
Butyl benzyl phthalate	µg/l	ND	ND	ND	ND	ND	ND	ND	ND	ND	ND	ND	ND	ND	ND	ND
Diethyl phthalate	µg/l	ND	ND	ND	ND	ND	ND	ND	ND	ND	ND	ND	ND	ND	ND	2.0
Di-n-butyl phthalate	µg/l	ND	3.0	3.0	ND	7.6	4.7	3.0	3.0	<2.8	5.0	ND	ND	3.0	ND	ND
Dioctyl phthalate	µg/l	ND	ND	ND	ND	ND	ND	ND	ND	ND	ND	ND	ND	ND	ND	ND
Fluoranthene	µg/l	ND	ND	ND	ND	ND	ND	ND	ND	<2.3	ND	ND	ND	ND	ND	ND
Hexachlorobenzene	µg/l	ND	ND	ND	ND	ND	ND	<2.3	ND	ND	ND	ND	ND	ND	ND	ND
Indeno(1,2,3-cd) pyrene	µg/l	ND	ND	ND	ND	ND	2.9	ND	ND	ND	ND	ND	ND	12	5.4	ND
Naphthalene	µg/l	ND	ND	ND	ND	ND	ND	ND	ND	ND	ND	ND	ND	ND	ND	ND
Nitrobenzene	µg/l	ND	ND	ND	ND	ND	ND	ND	ND	ND	ND	ND	ND	ND	ND	ND
N-Nitrosodiphenylamine	µg/l	ND	ND	ND	ND	ND	ND	<5.2	ND	ND	ND	ND	ND	ND	ND	ND
Pyrene	µg/l	ND	ND	ND	ND	ND	ND	ND	ND	ND	ND	ND	ND	ND	ND	ND
Benzo-a-pyrene	µg/l	ND	ND	ND	ND	ND	ND	ND	ND	40	ND	ND	ND	11	ND	ND
Pesticides																
Alpha - BHC	µg/l	ND	ND	ND	ND	ND	ND	ND	ND	ND	ND	ND	ND	ND	0.03	ND
Gamma - BHC	µg/l	ND	ND	ND	ND	ND	ND	ND	ND	ND	ND	ND	ND	0.08	0.06	ND
4,4-DDD	µg/l	ND	ND	ND	ND	0.30	ND	ND	ND	ND	ND	ND	ND	ND	ND	ND

< - Less than
ND - Not detected
* - No acids were detected above the detection limit

TABLE B-1. DRY WEATHER BACKGROUND SAMPLING - 26TH WARD

Parameter	Units	Tap Water (94008)	INFLUENT 4/24 (94000)	4/25 (94002)	4/26 (94004)	4/27 (94006)	4/28 (94015)	4/29 (94016)	4/30 (94017)	GRAVITY THICKENER OVERFLOW 4/24 (94001)	4/25 (94003)	4/26 (94005)	4/27 (94007)	4/28 (94012)	4/29 (94013)	4/30 (94014)
Metals																
Antimony	µg/l	<50	<50	<50	<50	<50	<50	<50	<50	<50	<50	<50	<50	<50	<50	<50
Arsenic	µg/l	<50	<50	<50	<50	<50	<50	<50	<50	<50	<50	<50	<50	<50	<50	<50
Beryllium	µg/l	<2	<2	<2	<2	<2	<2	<2	<2	<2	<2	<2	<2	<2	<2	<2
Cadmium	µg/l	<2	8	<2	4	9	13	7	12	<2	<2	<2	3	5	<2	112
Chromium	µg/l	<5	101	76	88	217	241	220	286	42	29	29	105	118	63	1870
Copper	µg/l	12	256	205	251	453	488	273	409	105	63	70	171	199	64	3960
Lead	µg/l	<50	127	93	88	143	263	112	123	<50	<50	<50	65	56	<50	1440
Mercury	µg/l	<0.2	0.6	0.3	0.3	0.8	0.7	0.4	0.7	0.2	0.6	0.2	0.3	0.3	0.2	3.6
Nickel	µg/l	<10	321	37	25	102	93	89	93	263	56	20	85	84	82	445
Selenium	µg/l	<50	<50	<50	<50	<50	<50	<50	<50	<50	<50	<50	<50	<50	<50	<50
Silver	µg/l	<5	22	7	<5	9	13	10	10	5	<5	<5	8	6	<5	92
Thallium	µg/l	<5	<5	<5	<5	<5	<5	<5	<5	<5	<5	<5	<5	<5	<5	<5
Zinc	µg/l	<20	299	196	218	394	659	248	558	117	62	60	132	393	252	4950
Others																
Cyanide	µg/l	12	96	70	104	101	130	79	103	58	61	44	52	315	65	260
Non-Conventional Metals																
Aluminum	µg/l	<20	1300	1250	1450	2290	2850	1500	2450	495	328	388	788	952	357	20,900
Barium	µg/l	15	72	72	86	119	145	79	112	41	34	36	56	61	32	974
Iron	µg/l	<50	2590	2440	2670	4310	5270	3190	4020	1020	642	760	1490	1660	887	38,800
Manganese	µg/l	8	123	118	118	139	149	133	137	102	101	94	103	108	116	485
Calcium	mg/l	8	51	53	54	54	50	52	50	46	48	47	47	47	47	74
Magnesium	mg/l	<2	95	98	97	89	79	90	79	89	86	82	75	75	81	83
Sodium	mg/l	7	802	777	768	676	573	754	664	740	709	649	560	523	667	575

< - Less than

TABLE B-1. DRY WEATHER BACKGROUND RESULTS - 26TH WARD

Parameter	Units	Digested Sludge 4/25 (94009)	Digested Sludge 4/27 (94010)	Digested Sludge 4/29 (94011)	Low Level Wet Well 4/28 (94018)	High Level Wet Well 4/28 (94019)
Conventional/ Nonconventional						
BOD5	mg/l	15,400	16,000	20,000	120	150
COD	mg/l	32,600	33,300	32,200	360	230
TOC	mg/l	468	444	471	87	85
Total Solids	mg/l	35,000	35,200	35,200	5,000	309
Total Volatile Solids	mg/l	20,000	20,200	22,000	820	180
Total Suspended Solids	mg/l	24,800	27,300	29,700	50	44
Total Vol. Sus. Solids	mg/l	16,400	17,300	18,700	37	36
Total Dissolved Solids	mg/l	8,390	6,670	6,000	4,940	330
Total Vol. Dis. Solids	mg/l	4,850	5,330	2,670	893	85
Settleable Solids	ml/l	860	940	945	0.5	5.0
Chloride	mg/l	NS	NS	NS	NS	NS
Ammonia Nitrogen	mg/l	526	506	560	7	4
Oil and Grease	mg/l	1,930	730	870	18	22
Total Phenol	µg/l	170	165	104	20	26
Volatiles						
Benzene	µg/l	7	12	9	ND	ND
Bromomethane	µg/l	ND	ND	ND	7.0	2.3
Chlorobenzene	µg/l	ND	ND	ND	ND	0.3
Chloroform	µg/l	ND	ND	ND	8.0	12
1,1-Dichloroethane	µg/l	ND	ND	ND	0.3	ND
1,1-Dichloroethylene	µg/l	ND	ND	ND	0.5	0.3
Trans-1,2-Dichloro-ethylene	µg/l	ND	ND	ND	17	3.0
Ethylbenzene	µg/l	ND	ND	ND	2.0	1.0
Methylene chloride	µg/l	58	43	27	1.0	2.0
1,1,1-Trichloroethane	µg/l	ND	ND	ND	2.0	1.0
1,1,2-Trichloroethane	µg/l	ND	ND	ND	11	ND
Trichloroethylene	µg/l	ND	ND	ND	16	51
Toluene	µg/l	ND	ND	ND	21	57
Vinyl chloride	µg/l	ND	ND	ND	10	2.0
Bromodichloromethane	µg/l	ND	ND	ND	2.0	0.7
1,1,2,2-Tetra-chloroethene	µg/l	ND	ND	ND	18	61

NS - Not sampled
ND - Not detected

TABLE B-1. DRY WEATHER BACKGROUND RESULTS - 26TH WARD

Parameter	Units	Digested Sludge 4/25 (94009)	Digested Sludge 4/27 (94010)	Digested Sludge 4/29 (94011)	Low Level Wet Well 4/28 (94018)	High Level Wet Well 4/28 (94019)
Acids*						
Base/Neutrals						
Bis(2-ethylhexyl) phthalate	µg/l	3,700	6,200	2,600	ND	ND
Butyl benzyl phatalate	µg/l	560	400	180	ND	ND
Diethyl phthalate	µg/l	ND	ND	20	3.5	ND
Di-n-butyl phthalate	µg/l	90	100	80	6.0	ND
Dioctyl phthalate	µg/l	510	310	270	ND	ND
Fluoranthene	µg/l	75	55	23	ND	ND
Hexachlorobenzene	µg/l	ND	ND	ND	<2.3	ND
Indeno(1,2,3-cd) pyrene	µg/l	ND	ND	ND	7.0	ND
Naphthalene	µg/l	62	45	ND	ND	ND
Nitrobenzene	µg/l	24	ND	ND	ND	ND
N-Nitrosodiphenylamine	µg/l	ND	ND	ND	<5.2	ND
Pyrene	µg/l	140	150	62	ND	ND
Metals						
Antimony	µg/l	<500	<500	<500	<50	<50
Arsenic	µg/l	<500	<500	<500	<50	<50
Beryllium	µg/l	<20	<20	<20	<2	<2
Cadmium	µg/l	2,720	2,310	2,240	<2	10
Chromium	µg/l	36,500	25,600	35,000	22	398
Copper	µg/l	84,500	80,700	79,700	112	250
Lead	µg/l	30,200	29,400	27,200	<50	<50
Mercury	µg/l	1.4	0.4	<0.2	<0.2	<0.2
Nickel	µg/l	7,070	7,030	6,690	80	191
Selenium	µg/l	<500	<500	<500	<50	<50
Silver	µg/l	1,000	1,680	337	<5	<5
Thallium	µg/l	<50	<50	<50	<5	<5
Zinc	µg/l	85,400	77,000	78,400	170	144
Others						
Cyanide	µg/l	160	220	160	180	168
Non-Conventional Metals						
Aluminum	µg/l	450,000	434,000	440,000	463	570
Barium	µg/l	20,400	19,900	18,000	50	45
Iron	µg/l	780,000	776,000	759,000	895	570
Manganese	µg/l	8,880	8,500	8,480	163	47
Calcium	mg/l	799	759	712	75	26
Magnesium	mg/l	375	370	361	161	10
Sodium	mg/l	800	668	683	1,160	61

* - No acids or pesticides detected above the detection limit.
ND - Not detected
< - Less than

TABLE B-2. STORM 1 (11 MAY 1981) RESULTS - 26TH WARD

Parameter	Units	HENDRIX STREET Overflow 2100 Hours (94020)	Overflow 2120 Hours (94021)	Overflow 2140 Hours (94022)	Overflow 2300 Hours (94023)	Overflow 2400 Hours (94024)	Overflow 0020 Hours (94027)	Overflow 0040 Hours (94025)
Conventional/ Nonconventional								
BOD5	mg/l	220	130	120	120	120	110	100
COD	mg/l	540	200	190	90	180	130	130
TOC	mg/l	124	65	34	23	27	32	23
Total Solids	mg/l	430	230	200	168	210	190	210
Total Volatile Solids	mg/l	220	56	104	68	96	80	104
Total Suspended Solids	mg/l	245	113	46	40	43	40	67
Total Vol. Sus. Solids	mg/l	70	46	23	20	23	23	30
Total Dissolved Solids	mg/l	155	105	115	142	193	183	163
Total Vol. Dis. Solids	mg/l	85	44	47	51	75	100	82
Settleable Solids	ml/l	6.0	2.8	2.1	0.6	1.5	1.3	1.0
Chloride	mg/l	NS	NS	NS	NS	NS	NS	NS
Ammonia Nitrogen	mg/l	3.0	2.0	2.0	1.0	2.0	2.0	2.0
Oil and Grease	mg/l	46	19	10	6	9	6	2
Total Phenol	mg/l	47	50	29	56	39	41	40
Volatiles								
Methylene chloride	µg/l	0.6	11.0	4.0	21.0	6.0	6.0	26.0
1,1-Dichloroethylene	µg/l	ND	0.6	0.7	1.0	0.5	0.5	1.0
Trans-1,2-Dichloroethylene	µg/l	2.0	5.0	2.0	2.0	3.0	1.0	3.0
Chloroform	µg/l	2.0	1.0	1.0	2.0	4.0	3.0	3.0
1,2-Dichloroethane	µg/l	0.7	0.6	ND	ND	ND	ND	ND
1,1,1-Trichloroethane	µg/l	0.6	6.0	6.0	10.0	3.0	4.0	12.0
Benzene	µg/l	ND	ND	ND	0.4	0.5	0.4	0.4
Trichloroethylene	µg/l	12	24	22	15	15	15	17
1,1,2,2-Tetrachloroethene	µg/l	41	41	27	18	22	21	24
*Toluene	µg/l	ND	9.0	ND	4.0	9.0	10	20
Chlorobenzene	µg/l	1.0	1.0	0.8	0.3	ND	0.8	0.4
Ethylbenzene	µg/l	2.0	1.0	4.0	1.0	1.0	1.0	1.0
Acids*								
Base/Neutrals								
1,2-Dichlorobenzene	µg/l	9.6	ND	3.4	ND	ND	ND	ND
Napthalene	µg/l	2.0	ND	ND	ND	ND	ND	ND
Diethyl phthalate	µg/l	ND	ND	1.6	ND	1.5	1.6	ND
Phenanthrene	µg/l	13.0	ND	ND	ND	ND	ND	ND
Di-n-butyl phthalate	µg/l	5.9	ND	3.2	ND	ND	ND	ND
Flouranthene	µg/l	4.7	4.8	ND	ND	ND	ND	ND
Pyrene	µg/l	4.7	3.8	ND	ND	ND	ND	ND
Butyl benzyl phthalate	µg/l	ND	9.0	7.0	ND	ND	ND	ND
*Bis(2-ethylhexyl) phthalate	µg/l	18.0	58.0	40.0	10.0	16.0	21.0	11.0

NS - Not sampled
ND - Not detected

TABLE B-2. STORM 1 (11 MAY 1981) RESULTS - 26TH WARD

Parameter	Units	HENDRIX STREET Overflow 2100 Hours (94020)	Overflow 2120 Hours (94021)	Overflow 2140 Hours (94022)	Overflow 2300 Hours (94023)	Overflow 2400 Hours (94024)	Overflow 0020 Hours (94027)	Overflow 0040 Hours (94025)
Pesticides								
4,4-DDD	µg/l	ND	0.3	ND	ND	ND	ND	ND
Metals								
Antimony	µg/l	<50	<50	<50	<50	<50	<50	<50
Arsenic	µg/l	<50	<50	<50	<50	<50	<50	<50
Beryllium	µg/l	<2	<2	<2	<2	<2	<2	<2
Cadmium	µg/l	6	<2	<2	<2	<2	<2	<2
Chromium	µg/l	88	79	43	22	19	23	50
*Copper	µg/l	352	196	102	44	55	62	60
*Lead	µg/l	820	536	279	107	137	122	119
Mercury	µg/l	0.4	0.7	<0.2	<0.2	<0.2	<0.2	<0.2
Nickel	µg/l	38	26	16	31	23	<10	17
Selenium	µg/l	IP	IP	IP	IP	IP	IP	IP
Silver	µg/l	<5	<5	<5	<5	<5	<5	<5
Thallium	µg/l	IP	IP	IP	IP	IP	IP	IP
*Zinc	µg/l	785	932	398	169	166	193	198
Others								
Cyanide	µg/l	253	55	46	32	35	34	32
Non-Conventional Metals								
Aluminum	µg/l	5,080	3,760	2,100	1,240	1,040	1,390	1,110
Barium	µg/l	228	129	91	72	45	72	45
Iron	µg/l	10,600	7,120	3,960	1,940	1,990	2,470	2,060
Manganese	µg/l	172	162	91	57	60	69	75
Calcium	mg/l	20	12	12	12	16	16	15
Magnesium	mg/l	6	4	3	4	5	6	5
Sodium	mg/l	11	7	10	16	22	21	19

IP - Interference present
< - Less than
* - No acidss were detected above the detection limit.

TABLE B-3. STORM 2 (25 JUNE 1981) RESULTS - 26TH WARD

Parameter	Units	HENDRIX STREET Runoff 1330 Hours (94046)	Runoff 1335 Hours (94041)	CS Flow 1430 Hours (94044)	CSO 1400 Hours (94049)	WILLIAMS AVENUE CS Flow 1500 Hours (94050)
Conventional/ Nonconventional						
BOD5	mg/l	232	145	314	177	196
COD	mg/l	200	120	600	148	104
TOC	mg/l	88	112	115	47	33
Total Solids	mg/l	468	94	364	196	202
Total Volatile Solids	mg/l	172	42	164	118	108
Total Suspended Solids	mg/l	249	87	219	92	47
Total Vol. Sus. Solids	mg/l	80	38	111	29	27
Total Dissolved Solids	mg/l	75	42	130	108	87
Total Vol. Dis. Solids	mg/l	31	26	55	41	39
Settleable Solids	ml/l	1.5	5.0	8.0	2.0	0.8
Chloride	mg/l	3.5	2.5	16.5	19.0	11.0
Ammonia Nitrogen	mg/l	1.0	1.0	4.0	2.0	2.0
Oil and Grease	mg/l	16.6	8.3	23.9	15.1	12.4
Total Phenol	µg/l	25	27	62	39	79
Volatiles						
Trans-1,2-Dichloroethylene	µg/l	ND	ND	23	3	11
Chloroform	µg/l	ND	ND	3.0	ND	2.0
1,1,1-Trichloroethylene	µg/l	ND	ND	40	4	10
Trichloroethylene	µg/l	ND	ND	74	11	130
1,1,2,2-Tetra-chloroethylene	µg/l	ND	ND	400	52	270
1,1,2,2-Tetrachloroethane	µg/l	ND	ND	57	42	35
Chlorobenzene	µg/l	ND	ND	4	3	4
Ethylbenzene	µg/l	ND	ND	3	2	3
Methylene chloride	µg/l	ND	ND	15	ND	10
Acids*						
Base/Neutrals						
Napthalene	µg/l	ND	ND	ND	2.7	ND
Diethyl phthalate	µg/l	4.6	ND	ND	4.8	ND
Di-n-butyl phthalate	µg/l	9.6	8.6	ND	ND	ND
Butyl benzyl phthalate	µg/l	6.2	ND	3.3	3.3	ND
Bis(2-ethylhexyl) phthalate	µg/l	41	ND	14	16	45
Pesticides*						

*No Pesticides were detected above the detection limit.
ND - Not detected

TABLE B-3. STORM 2 (25 JUNE 1981) RESULTS - 26TH WARD

Parameter	Units	HENDRIX STREET Runoff 1330 Hours (94046)	Runoff 1335 Hours (94041)	CS Flow 1430 Hours (94044)	CSO 1400 Hours (94049)	WILLIAMS AVENUE CS Flow 1500 Hours (94050)
Metals						
Antimony	µg/l	<50	<50	<50	<50	<50
Arsenic	µg/l	<50	<50	<50	<50	<50
Beryllium	µg/l	<2	<2	<2	<2	<2
Cadmium	µg/l	<2	<2	<2	<2	<2
Chromium	µg/l	32	19	173	62	21
Copper	µg/l	69	47	453	94	124
Lead	µg/l	774	225	483	163	115
Mercury	µg/l	<0.2	0.9	0.3	<0.2	<0.2
Nickel	µg/l	<10	<10	78	25	21
Selenium	µg/l	<50	<50	<50	<50	<50
Silver	µg/l	<5	<5	<5	<5	<5
Thallium	µg/l	IP	IP	IP	IP	IP
Zinc	µg/l	637	163	1,000	251	238
Others						
Cyanide	µg/l	73	61	181	128	231
Non-Conventional Metals						
Aluminum	µg/l	2,890	721	6,170	2,270	1,480
Barium	µg/l	108	28	192	64	68
Iron	µg/l	5,770	1,720	7,690	2,770	2,470
Manganese	µg/l	124	32	135	63	70
Calcium	mg/l	16	5	18	11	10
Magnesium	mg/l	5	<2	4	3	<2
Sodium	mg/l	<2	<2	16	15	9

IP - Interference present
< - Less than

TABLE B-4. STORM 3 (8 AUGUST 1981) RESULTS 26TH WARD

Parameter	Units	WILLIAMS AVENUE Runoff (94028)	Runoff (94032)	Runoff (94033)	Runoff (94052)
Conventional/ Nonconventional					
BOD5	mg/l	204	92	79	85
COD	mg/l	328	116	192	236
TOC	mg/l	110	34	56	80
Total Solids	mg/l	264	120	220	218
Total Volatile Solids	mg/l	162	76	158	150
Total Suspended Solids	mg/l	140	50	41	33
Total Vol. Sus. Solids	mg/l	100	24	22	28
Total Dissolved Solids	mg/l	211	190	190	164
Total Vol. Dis. Solids	mg/l	117	50	63	82
Settleable Solids	ml/l	1.0	<0.1	0.4	0.8
Chloride	mg/l	8.0	4.5	10.0	13.5
Ammonia Nitrogen	mg/l	0.5	1.4	0.6	0.5
Oil and Grease	mg/l	38.8	10.6	11.5	1.5
Total Phenol	µg/l	30	4	14	165
Volatiles					
Benzene	µg/l	0.75	ND	ND	ND
Methylene chloride	µg/l	6.2	5.4	9.1	7.7
Acids*					
Base/Neutrals					
Diethyl phthalate	µg/l	ND	2.9	2.1	4.1
Di-n-butyl phthalate	µg/l	ND	4.8	ND	ND
Butyl benzyl phthalate	µg/l	3.0	ND	ND	ND
Bis(2-ethylhexyl) phthalate	µg/l	ND	13	ND	ND
Pesticides*					

< - Less than
ND - Not detected
*No acids were detected above the detection limit.

TABLE B-4. STORM 3 (8 AUGUST 1981) RESULTS 26TH WARD

Parameter	Units	WILLIAMS AVENUE Runoff (94028)	Runoff (94032)	Runoff (94033)	Runoff (94052)
Metals					
Antimony	µg/l	<50	<50	<50	<50
Arsenic	µg/l	<50	<50	<50	<50
Beryllium	µg/l	<2	<2	<2	<2
Cadmium	µg/l	3	4	<2	3
Chromium	µg/l	18	<5	<5	8
Copper	µg/l	155	63	49	28
Lead	µg/l	689	190	200	55
Mercury	µg/l	NS	NS	NS	NS
Nickel	µg/l	27	13	<10	37
Selenium	µg/l	<50	<50	<50	<50
Silver	µg/l	<5	<5	<5	<5
Thallium	µg/l	IP	IP	IP	IP
Zinc	µg/l	498	249	178	231
Others					
Cyanide	µg/l	60	72	50	58
Non-Conventional Metals					
Aluminum	µg/l	1,960	548	467	182
Barium	µg/l	120	33	40	21
Iron	µg/l	5,570	1,610	1,240	413
Manganese	µg/l	132	56	70	120
Calcium	mg/l	30	11	18	16
Magnesium	mg/l	6	<2	3	4
Sodium	mg/l	<7	4	5	4

< - Less than
NS - Not sampled
IP - Interference present

TABLE B-5. DRY WEATHER BACKGROUND RESULTS - NEWARK, NJ

Parameter	Units	Tap Water (94176)	Rector Catchment 8/17 (94161)	8/18 (94164)	8/19 (94167)	8/20 (94170)	8/21 (94173)	Saybrook Catchment 8/17 (94162)	8/18 (94165)	8/19 (94168)	8/20 (94171)	8/21 (94174)	Herbert Catchment 8/17 (94163)	8/18 (94166)	8/19 (94169)	8/20 (94172)	8/21 (94175)
Conventional/ Nonconventional																	
BOD5	mg/l	6	137	119	110	74	127	128	120	116	64	79	194	236	201	210	203
COD	mg/l	4	36	101	40	56	44	44	72	56	32	24	170	380	350	208	380
TOC	mg/l	2	20	27	15	12	19	4	17	24	23	13	45	104	89	78	66
Total Solids	mg/l	112	152	110	162	156	168	192	192	198	188	172	224	278	238	198	312
Total Volatile Solids	mg/l	38	56	64	68	110	68	74	78	68	160	48	90	122	81	72	122
Total Suspended Solids	mg/l	2	11	31	18	24	18	7	17	19	83	22	35	84	85	80	155
Total Vol. Sus. Solids	mg/l	2	11	31	18	14	19	7	15	7	19	22	26	76	77	76	134
Total Dissolved Solids	mg/l	128	152	160	254	137	165	169	175	176	176	173	180	238	250	273	259
Total Vol. Dis. Solids	mg/l	36	69	62	64	55	65	84	74	59	81	46	79	108	113	180	130
Settleable Solids	ml/l	<0.1	0.6	2.0	2.0	0.2	3.0	0.5	1.5	3	2	3	2	3	1	0.7	4
Chloride	mg/l	2	28	30	29.5	27.5	30.0	23.5	32	33.5	34	21.5	34.5	84	41	48	42.5
Ammonia Nitrogen	mg/l	1	2.6	3.5	4.9	3.2	4.8	1.6	2.5	3.6	5	3.1	23.4	24.5	36	38.1	33.6
Oil and Grease	mg/l	5.9	3.5	7.7	4.0	9.9	4.7	5.6	9.8	3.7	4.3	5.5	28.5	21.6	22	29.5	21.1
Total Phenol	µg/l	ND	ND	9	10	14	1	2	118	16	12	14	21	89	16	15	26
Volatiles																	
Chloromethane	µg/l	ND	1.9	ND	ND	ND	ND	ND	ND	ND	ND	ND	ND	ND	ND	ND	ND
Trichlorofluoromethane	µg/l	ND	1.3	ND	ND	ND	ND	ND	ND	ND	ND	ND	1.9	ND	ND	ND	ND
Chloroform	µg/l	79	24	33	37	25	25	23	28	23	21	31	ND	17	11	12	11
1,2-Dichloroethane	µg/l	ND	1.1	ND	6.8	2.6	2.0	ND	1.0	3.6	2.2	1.0	12	ND	1.2	0.65	2.0
1,1,1-Trichloroethane	µg/l	ND	ND	1.0	1.7	0.81	ND	3.0	ND	2.6	2.8	ND	0.79	ND	3.5	1.1	ND
Bromodichloromethane	µg/l	14	3.2	5.0	5.4	3.4	3.0	3.0	3.0	2.7	2.6	3.0	ND	0.8	ND	0.74	ND
1,2-Dichloropropane	µg/l	ND	ND	ND	ND	ND	ND	ND	ND	ND	ND	ND	0.48	ND	ND	ND	ND
Trichloroethylene	µg/l	ND	ND	ND	0.78	0.42	ND	ND	ND	0.44	0.73	ND	ND	ND	ND	ND	ND
Cis-1,3-Dichloropropene	µg/l	ND	ND	ND	ND	ND	ND	ND	ND	ND	ND	ND	0.46	ND	ND	ND	ND
Dibromochloromethane	µg/l	2.0	ND	ND	0.67	ND	ND	ND	ND	ND	ND	ND	ND	ND	ND	2.0	ND
1,1,2,2-Tetra-chloroethene	µg/l	ND	0.75	1.0	1.7	0.98	ND	1.0	2.0	1.5	2.3	2.0	ND	ND	1.6	13	37
Toluene	µg/l	ND	1.2	ND	8	2.4	2	ND	ND	15	2	2.0	ND	2.5	4.4	4.3	2
1,1,2,2-Tetra-chloroethane	µg/l	ND	ND	2.0	ND	ND	ND	ND	ND	ND	ND	ND	9.7	3.0	ND	ND	ND
Chlorobenzene	µg/l	ND	ND	ND	ND	ND	ND	ND	ND	ND	ND	ND	1.5	ND	ND	ND	ND
Ethylbenzene	µg/l	ND	0.85	1.0	2.1	0.7	ND	1.0	1.0	2.2	1.1	3.0	ND	ND	0.54	0.95	ND
1,3-Dichlorobenzene	µg/l	ND	1.3	2.0	2.3	2.1	ND	1.0	2.0	ND	ND	ND	ND	ND	ND	ND	ND
1,2-Dichlorobenzene	µg/l	ND	9.7	7.0	8.5	9.2	ND	7.0	4.0	ND	3.6	ND	ND	ND	ND	4.2	ND
1,4-Dichlorobenzene	µg/l	ND	9.7	7.0	8.5	9.2	ND	7.0	4.0	ND	3.6	ND	ND	ND	ND	4.2	ND
Acid Extractable																	
Phenol	µg/l	ND	ND	ND	ND	ND	ND	ND	ND	ND	ND	ND	ND	3	3	2	3

< - Less than
ND - Not detected

TABLE B-5. DRY WEATHER BACKGROUND RESULTS - NEWARK, NJ

Parameter	Units	Tap Water (94176	Rector Catchment 8/17 (94161)	8/18 (94164)	8/19 (94167)	8/20 (94170)	8/21 (94173)	Saybrook Catchment 8/17 (94162)	8/18 (94165)	8/19 (94168)	8/20 (94171)	8/21 (94174)	Herbert Catchment 8/17 (94163)	8/18 (94166)	8/19 (94169)	8/20 (94172)	8/21 (94175)
Base-Neutrals																	
Diethyl phthalate	µg/l	ND	2.0	3.0	4.0	ND	ND	ND	3.0	7.0	ND	2.0	ND	3.0	ND	4.0	6.0
Di-n-butyl phthalate	µg/l	ND	ND	ND	ND	ND	ND	ND	ND	ND	ND	ND	ND	ND	8.0	7.0	4.0
Butyl benzyl phthalate	µg/l	ND	ND	ND	ND	ND	ND	ND	ND	ND	ND	ND	ND	ND	ND	10	11
Bis(2-ethylhexyl) phthalate	µg/l	ND	4.0	6.0	7.0	ND	6.0	ND	3.0	4.0	ND	6.0	15	27	35	41	28
Di-n-octyl phthalate	µg/l	ND	ND	ND	ND	ND	ND	ND	ND	ND	ND	ND	ND	ND	4.0	5.0	2.0
Pesticides																	
Alpha-BHC	µg/l	ND	0.01	0.01	ND	ND	ND	ND	0.01	ND	ND	ND	ND	ND	ND	ND	ND
Beta-BHC	µg/l	ND	0.01	0.04	0.03	0.02	0.04	0.01	0.03	ND	0.01	0.03	0.10	0.2	0.04	ND	0.02
Gamma-BHC	µg/l	ND	ND	ND	0.02	ND	ND	ND	ND	ND	ND	ND	ND	0.1	ND	ND	0.08
Aldrin	µg/l	ND	ND	ND	ND	ND	ND	ND	ND	ND	ND	ND	0.40	ND	ND	ND	ND
Metals																	
Antimony	µg/l	<50	<50	<50	<50	<50	<50	<50	<50	<50	<50	<50	<50	<50	<50	<50	<50
Arsenic	µg/l	<50	<50	<50	<50	<50	<50	<50	<50	<50	<50	<50	<50	<50	<50	<50	<50
Beryllium	µg/l	<2	<2	<2	<2	<2	<2	<2	<2	<2	<2	<2	<2	<2	<2	<2	<2
Cadmium	µg/l	<2	<2	<2	<2	<2	<2	<2	<2	<2	<2	<2	<2	<2	<2	<2	<2
Chromium	µg/l	<5	354	375	260	270	446	9	8	<5	13	9	<5	<5	<5	<5	8
Copper	µg/l	17	35	74	51	44	50	36	36	42	43	44	75	118	95	109	133
Lead	µg/l	<50	<50	<50	<50	<50	<50	<50	<50	<50	<50	<50	<50	<50	<50	<50	88
Mercury	µg/l																
Nickel	µg/l	<10	<10	<10	<10	<10	<10	<10	<10	<10	<10	<10	<10	<10	<10	14	11
Selenium	µg/l	<50	<50	<50	<50	<50	<50	<50	<50	<50	<50	<50	<50	<50	<50	<50	<50
Silver	µg/l	<5	<5	6	<5	9	10	<5	<5	<5	<5	<5	<5	7	8	8	11
Thallium	µg/l	IP	IP	IP	IP	IP	IP	IP	IP	IP	IP	IP	IP	IP	IP	IP	IP
Zinc	µg/l	<20	40	83	57	54	61	40	40	56	48	54	57	121	85	94	197
Others																	
Cyanide	µg/l	90	126	134	103	156	128	110	87	90	128	131	180	183	163	171	164

< - Less than
ND - Not detected

TABLE B-5. DRY WEATHER BACKGROUND RESULTS - NEWARK, NJ

Parameter	Units	Tap Water (94176)	Rector Catchment 8/17 (94161)	8/18 (94164)	8/19 (94167)	8/20 (94170)	8/21 (94173)	Saybrook Catchment 8/17 (94162)	8/18 (94165)	8/19 (94168)	8/20 (94171)	8/21 (94174)	Herbert Catchment 8/17 (94163)	8/18 (94166)	8/19 (94169)	8/20 (94172)	8/21 (94175)
Non-Conventional Metals																	
Aluminum	µg/l	93	98	175	93	93	131	110	103	141	157	167	273	540	348	354	736
Barium	µg/l	11	35	81	54	67	53	25	25	30	25	29	22	32	22	18	39
Iron	µg/l	<50	375	808	399	327	425	416	401	500	622	506	691	1070	157	739	1320
Manganese	µg/l	41	124	134	122	117	114	205	98	228	199	212	124	140	21	126	132
Calcium	mg/l	16	16	17	17	16	17	19	20	20	19	19	17	17	15	16	17
Magnesium	mg/l	3	4	4	4	4	4	5	5	5	5	5	5	5	4	5	5
Sodium	mg/l	9	14	17	15	14	15	18	17	20	17	17	21	32	31	35	34

ND - Not detected
NS - Not sampled
IP - Interference present
< - Less than
Pollutants not listed were not detected above the analytical detection limits.

TABLE B-6. STORM 1 (15 SEPTEMBER 1981) RESULTS - NEWARK, NJ

Parameter	Units	Saybrook Catchment				Herbert Catchment
		CSF Grab (94109)	CSO Grab (94102)	Runoff A Grab (94100)	Runoff B Grab (94110)	CSO Grab (94108)
Conventional/Nonconventional						
BOD5	mg/l	170	233	78	67	167
COD	mg/l	188	228	300	152	252
TOC	mg/l	70	74	102	66	84
Total Solids	mg/l	212	270	208	138	136
Total Volatile Solids	mg/l	72	90	60	28	50
Total Suspended Solids	mg/l	100	164	166	100	100
Total Vol. Sus. Solids	mg/l	83	140	70	24	83
Total Dissolved Solids	mg/l	168	112	51	48	112
Total Vol. Dis. Solids	mg/l	67	76	25	34	58
Settleable Solids	ml/l	9.0	15	1.0	0.2	2.0
Chloride	mg/l	34.0	21.0	11.0	17.0	7.5
Ammonia Nitrogen	mg/l	3.8	3.3	1.7	1.5	3.4
Oil and Grease	mg/l	20.5	32	27.2	38.5	16.7
Total Phenol	µg/l	12	22	88	68	36
Volatiles						
Benzene	µg/l	ND	ND	<10	<10	<10
Bromodichloromethane	µg/l	<10	ND	ND	ND	<10
Bromoform	µg/l	<10	ND	ND	ND	ND
Chlorobenzene	µg/l	<10	<10	ND	ND	ND
Chloroethane	µg/l	ND	<10	ND	ND	ND
Chloroform	µg/l	34	39	ND	<10	27
Methyl chloride	µg/l	11	ND	ND	ND	<10
1,1-Dichloroethylene	µg/l	<10	<10	17	<10	<10
Ethylbenzene	µg/l	<10	<10	ND	ND	<10
Methylene chloride	µg/l	ND	<10	ND	ND	19
Tetrachloroethylene	µg/l	<10	<10	ND	ND	76
1,1,1-Trichloroethane	µg/l	16	<10	ND	ND	ND
Trichloroethylene	µg/l	ND	ND	ND	ND	<10
Toluene	µg/l	<10	<10	ND	<10	<10
Vinyl chloride	µg/l	<10	ND	ND	ND	ND

ND - Not detected
< - Less than

TABLE B-6. STORM 1 (15 SEPTEMBER 1981) RESULTS - NEWARK, NJ

Parameter	Units	Saybrook Catchment				Herbert Catchment
		CSF Grab (94109)	CSO Grab (94102)	Runoff A Grab (94100)	Runoff B Grab (94110)	CSO Grab (94108)
Acid Extractable						
2,4-Dimethylphenol	µg/l	ND	ND	<10	<10	ND
2,4-Dinitrophenol	µg/l	ND	ND	15	ND	419
2-Methyl-4,6-Dinitrophenol	µg/l	ND	ND	ND	ND	118
4-Nitrophenol	µg/l	ND	ND	<10	ND	14
Pentachlorophenol	µg/l	ND	ND	ND	ND	33
Phenol	µg/l	ND	ND	<10	<10	<10
Base-Neutrals						
Acemaphthylene	µg/l	ND	ND	<10	ND	<10
Bis(2-ethylhexyl) phthalate	µg/l	<10	<10	ND	<10	<10
Bis(2-chlorosiopropyl) ether	µg/l	ND	<10	ND	ND	ND
3,3-Dichlorobenzidine	µg/l	<10	<10	ND	ND	ND
Diethyl phthalate	µg/l	ND	ND	<10	<10	<10
Dimethyl phthalate	µg/l	ND	ND	ND	ND	ND
2,4-Dinitrotoluene	µg/l	ND	ND	ND	ND	<10
Di-n-butyl phthalate	µg/l	ND	ND	<10	<10	<10
Fluorene	µg/l	ND	ND	ND	ND	<10
Benzo(a)pyrene	µg/l	ND	ND	<10	ND	ND
Isophorane	µg/l	ND	ND	ND	ND	<10
Naphthalene	µg/l	ND	ND	ND	ND	<10
Nitrobenzene	µg/l	ND	ND	ND	ND	<10
N-nitro-n-propylamine	µg/l	<10	ND	ND	ND	<10
N-nitrosodiphenylamine	µg/l	ND	ND	<10	<10	<10
Phenanthrene	µg/l	ND	ND	ND	ND	<10
Pesticides						
Aldrin	µg/l	<0.1	<0.1	ND	<0.1	<0.1
Alpha-BHC	µg/l	<0.1	<0.1	<0.1	<0.1	<0.1
Beta-BHC	µg/l	ND	ND	ND	<0.1	<0.1
Delta-BHC	µg/l	<0.1	<0.1	<0.1	ND	<0.1
Gamma-BHC	µg/l	<0.1	<0.1	0.1	<0.1	<0.1
4,4'-DDD	µg/l	ND	ND	ND	ND	<0.1
4,4'-DDE	µg/l	ND	ND	ND	ND	<0.1
4,4'-DDT	µg/l	ND	ND	ND	ND	0.4
Alpha endosulfan	µg/l	ND	ND	<0.1	<0.1	ND
Beta endosulfan	µg/l	ND	ND	ND	ND	<0.1
Endrin	µg/l	ND	ND	0.1	<0.1	<0.1
Heptachlor	µg/l	ND	ND	0.2	<0.1	<0.1
Heptachlor epoxide	µg/l	ND	ND	<0.1	ND	ND

ND - Not detected
< - Less than

TABLE B-6. STORM 1 (15 SEPTEMBER 1981) RESULTS - NEWARK - NJ

Parameter	Units	Saybrook Catchment CSF Grab (94109)	Saybrook Catchment CSO Grab (94102)	Saybrook Catchment Runoff A Grab (94100)	Saybrook Catchment Runoff B Grab (94110)	Herbert Catchment CSO Grab (94108)
Metals						
Antimony	µg/l	<50	<50	<50	<50	<50
Arsenic	µg/l	<50	<50	<50	<50	<50
Beryllium	µg/l	<2	<2	<2	<2	<2
Cadmium	µg/l	<2	<2	5	5	<2
Chromium	µg/l	28	72	43	37	11
Copper	µg/l	214	266	209	113	155
Lead	µg/l	200	288	1240	545	338
Mercury	µg/l	1.1	1.2	0.8	0.7	0.3
Nickel	µg/l	22	27	51	28	14
Selenium	µg/l	<50	<50	<50	<50	<50
Silver	µg/l	12	8	<5	<5	<5
Thallium	µg/l	<100	<100	<100	<100	<100
Zinc	µg/l	417	508	964	578	381
Others						
Cyanide	µg/l	62	61	33	21	43
Non-Conventional Metals:						
Aluminum	µg/l	1190	2900	1630	2660	1600
Barium	µg/l	79	124	167	159	70
Iron	µg/l	3640	5420	11600	8300	4420
Manganese	µg/l	382	297	200	148	171
Calcium	mg/l	24	23	18	12	15
Magnesium	mg/l	5	4	3	<2	3
Sodium	mg/l	18	15	7	7	10

ND - Not detected
< - Less than
Pollutants not listed were not detected above the analytical detection limits.

TABLE B-7. STORM 2 (23 OCTOBER 1981) RESULTS - NEWARK, NJ

		Rector Catchment									Saybrook Composite		Precipi-
Parameter	Units	WW BKGD 1015 hr (94103)	CSO 1445 hr (94105)	CSO 1500 hr (94116)	CSO 1515 hr (94111)	CSO 1530 hr (94117)	CSO 1545 hr (94118)	CSO 1600 hr (94125)	CS FLOW 1600 hr (94119)	1st Flush Composite (94120)	WW BKGD 1015 hr (94122)	1st Flush Composite (94101)	tation Composite (94104)
Conventional/ Non-Conventional													
BOD5	mg/l	112	95	95	101	87	73	82	68	98	70	96	9
COD	mg/l	240	228	188	228	188	124	160	216	476	144	208	20
TOC	mg/l	70	79	69	57	56	42	11	63	121	48	73	4
Total Solids	mg/l	290	260	214	234	154	160	136	134	364	202	334	30
Total Volatile Solids	mg/l	142	112	94	126	76	74	52	58	210	76	172	0
Total Suspended Solids	mg/l	52	94	80	76	56	46	40	44	160	44	122	2.0
Total Vol.Sus. Solids	mg/l	40	58	52	52	42	26	32	26	128	32	94	2.0
Total Dissolved Solids	mg/l	232	164	110	158	118	160	106	128	204	196	208	10
Total Vol.Dis. Solids	mg/l	126	16	36	74	70	100	68	76	108	80	122	28
Settleable Solids	mg/l	10	7.5	3.5	3.5	4.0	2.0	1.0	1.0	7.5	2.0	12	0
Chloride	mg/l	44.5	18.5	15.5	17	15	19.5	17	16	38.5	30.5	35	5.5
Ammonia Nitrogen	mg/l	14.3	5.9	3.1	4.1	3.1	3.5	3.1	3.7	14.5	5.7	8.3	0.3
Oil and Grease	mg/l	14.3	11.2	12.7	9.6	6.8	7.8	4.6	11.5	7.4	7.3	8.4	1.5
Total Phenol	µg/l	23	20	13	23	0	12	15	6.0	25	14	16	127
Volatiles													
1,1,1-Trichloroethane	µg/l	<10	ND	ND	ND	ND	<10	19	52	ND	186	38	ND
Chloroform	µg/l	69	16	11	15	16	10	16	13	30	33	42	<10
Ethylbenzene	µg/l	<10	ND	ND	<10	<10	<10	<10	<10	<10	<10	ND	<10
Methylene chloride	µg/l	<10	<10	<10	<10	<10	<10	<10	<10	13	<10	17	13
Trichloroflurometh ane	µg/l	40	481	265	281	212	139	140	145	622	<10	ND	ND
Tetrachloroethylene	µg/l	<10	<10	ND	<10	<10	17	17	<10	<10	<10	ND	ND
Trichloroethylene	µg/l	<10	ND	ND	ND	ND	ND	ND	ND	ND	<10	ND	ND
Dichlorobromomethane	µg/l	ND	<10	<10	ND	<10	ND	<10	<10	<10	ND	ND	ND
Toluene	µg/l	ND	ND	ND	ND	ND	ND	ND	ND	<10	ND	ND	ND
1,2-Dichloroethane	µg/l	ND	ND	ND	ND	ND	ND	ND	ND	ND	<10	ND	ND
1,1-Dichloroethane	µg/l	ND	ND	ND	ND	ND	ND	ND	ND	ND	<10	ND	ND
1,1-Dichloroethylene	µg/l	ND	ND	ND	ND	ND	ND	ND	ND	ND	<10	ND	ND
Chlorodibromomethane	µg/l	ND	ND	ND	ND	ND	ND	ND	ND	ND	ND	ND	ND

< - Less than
ND - Not detected

TABLE B-7. STORM 2 (23 OCTOBER 1981) RESULTS - Newark, NJ

Parameter	Units	Rector Catchment									Saybrook Composite		Precipitation Composite
		WW BKGD 1015 hr (94103)	CSO 1445 hr (94105)	CSO 1500 hr (94116)	CSO 1515 hr (94111)	CSO 1530 hr (94117)	CSO 1545 hr (94118)	CSO 1600 hr (94125)	CS FLOW 1600 hr (94119)	1st Flush Composite (94120)	WW BKGD 1015 hr (94122)	1st Flush Composite (94101)	(94104)
Acids													
2,4-Dinitrophenol	µg/l	177	ND	ND	ND	ND	ND	ND	ND	ND	ND	ND	ND
4,6-Dinitro-o-cresol	µg/l	<10	ND	ND	ND	ND	ND	ND	ND	ND	ND	ND	ND
Phenol	µg/l	<10	ND	ND	ND	ND	ND	ND	ND	ND	ND	ND	<10
2,4-Dimethylphenol	µg/l	ND	ND	ND	ND	<10	<10	ND	ND	ND	ND	NS	<10
Base/Neutrals													
1,2-Dichlorobenzene	µg/l	<10	ND	ND	ND	ND	ND	ND	ND	ND	<10	ND	<10
1,4-Dichlorobenzene	µg/l	<10	ND	ND	ND	ND	ND	ND	ND	ND	<10	ND	ND
Isophorone	µg/l	ND	<10	ND	ND	ND	ND	ND	ND	<10	ND	<10	ND
Bis(2-ethylhexyl) phthalate	µg/l	ND	14	<10	<10	16	21	<10	<10	<10	24	14	<10
Butylbenzyl phthalate	µg/l	ND	<10	ND	ND	<10	<10	ND	ND	<10	<10	ND	ND
Di-n-butyl phthalate	µg/l	ND	<10	<10	<10	<10	<10	<10	<10	<10	<10	<10	<10
Diethyl phthalate	µg/l	ND	<10	<10	ND	<10	<10	ND	<10	<10	ND	ND	<10
1,3-Dichlorobenzene	µg/l	ND	ND	ND	ND	ND	ND	ND	ND	ND	ND	<10	ND
Pesticides													
Aldrin	µg/l	<0.1	<0.1	<0.1	<0.1	<0.1	<0.1	<0.1	ND	<0.1	ND	<0.1	ND
Aeptachlor	µg/l	<0.1	ND	ND	ND	ND	ND	ND	ND	<0.1	<0.1	<0.1	ND
Alpha-BHC	µg/l	<0.1	<0.1	<0.1	<0.1	<0.1	<0.1	<0.1	<0.1	<0.1	<0.1	<0.1	<0.1
Beta-BHC	µg/l	<0.1	<0.1	<0.1	<0.1	<0.1	<0.1	<0.1	<0.1	<0.1	<0.1	<0.1	<0.1
Delta-BHC	µg/l	0.2	<0.1	<0.1	<0.1	<0.2	<0.1	<0.1	0.1	0.1	<0.1	<0.1	<0.1
Gamma-BHC	µg/l	<0.1	<0.1	<0.1	<0.1	<0.1	<0.1	<0.1	<0.1	<0.1	<0.1	<0.1	<0.1
4,4'-DDT	µg/l	ND	ND	ND	ND	ND	ND	ND	ND	ND	<0.1	ND	ND
4,4'-DDE	µg/l	ND	ND	ND	ND	ND	ND	ND	ND	ND	<0.1	ND	ND

ND - Not detected
< - Less than

TABLE B-7. STORM 2 (23 OCTOBER 1982) RESULTS - NEWARK, NJ

Parameter	Units	Rector Catchment									Saybrook Composite		Precipitation Composite
		WW BKGD 1015 hr (94103)	CSO 1445 hr (94105)	CSO 1500 hr (94116)	CSO 1515 hr (94111)	CSO 1530 hr (94117)	CSO 1545 hr (94118)	CSO 1600 hr (94125)	CS FLOW 1600 hr (94119)	1st Flush Composite (94120)	WW BKGD 1015 hr (94122)	1st Flush Composite (94101)	(94104)
Metals													
Antimony	µg/l	<20	<20	<20	<20	<20	<20	<20	<20	<20	<20	<20	<20
Arsenic	µg/l	<10	<10	<10	<10	<10	<10	<10	<10	<10	<10	<10	<10
Beryllium	µg/l	<2	<2	<2	<2	<2	<2	<2	<2	<2	<2	<2	<2
Cadmium	µg/l	<5	<5	<5	<5	<5	<5	<5	<5	<5	<5	<5	<5
Chromium	µg/l	50	80	70	50	70	50	50	30	110	20	20	<10
Copper	µg/l	100	180	120	100	100	80	80	80	180	60	80	20
Lead	µg/l	<40	280	200	120	120	80	80	120	160	<40	80	<40
Mercury	µg/l	<1	<1	<1	<1	<1	<1	<1	<1	<1	<1	<1	<1
Nickel	µg/l	<20	<20	<20	<20	<20	<20	<20	<20	<20	<20	<20	<20
Selenium	µg/l	<10	<10	<10	<10	<10	<10	<10	<10	<10	<10	<10	<10
Silver	µg/l	20	<20	30	<20	<20	<20	<20	<20	40	<20	<20	<10
Thallium	µg/l	<10	<10	<10	<10	<10	<10	<10	<10	<10	<10	<10	<10
Zinc	µg/l	180	330	270	200	210	200	180	190	320	100	180	70
Others													
Cyanide	µg/l	175	164	89	91	83	78	73	76	119	78	83	54
Non-Conventional Metals													
Aluminum	µg/l	350	1400	1200	750	850	600	550	550	1000	200	500	150
Barium	µg/l	80	150	100	70	50	50	40	50	160	20	50	20
Iron	µg/l	1000	3280	2500	1560	1360	1200	1120	1260	2700	720	1520	100
Manganese	µg/l	210	150	130	100	100	100	80	90	220	240	280	<10
Calcium	µg/l	17500	13500	11700	11000	11000	11300	10400	10700	16600	17400	19200	2100
Magnesium	µg/l	4400	2700	2300	2200	2100	2300	1900	2000	3700	2100	4100	400
Sodium	µg/l	24500	12000	10600	15800	11500	9600	9700	8500	24700	19600	19600	1600
Tin	µg/l	<20	40	<20	<20	<20	<20	<20	<20	<20	<20	<20	<20
Vanadium	µg/l	<2	10	10	<10	<10	<10	<10	<10	<10	<10	<10	<10
Boron	µg/l	70	40	50	40	30	20	30	30	80	30	60	<10
Cobalt	µg/l	<10	<10	<10	<10	<10	<10	<10	<10	<10	<10	<10	<20

ND - Not detected
< - Less than
Pollutants not listed were not detected above the analytical detection limits.

TABLE B-8. STORM 3 (1 DECEMBER 1981) RESULTS - NEWARK, NJ

		Rector Catchment				Saybrook Catchment							
Parameters	Units	CSO 1630 hr (94138)	CSO 1645 hr (94156)	CSO 1700 hr (94123)	CSO 1715 hr (94158)	CSO 1700 hr (94115)	CSO 1715 hr (94114)	CSO 1730 hr (94113)	CSO 1745 hr (94121)	CSO 1800 hr (94112)	CSO 1815 hr (94157)	CSO 1830 hr (94106)	CSO 1845 hr (94124)
Conventional/ Non-conventional													
BOD5	mg/l	109	89	86	80	61	90	81	75	91	75	89	99
COD	mg/l	142	104	92	100	92	120	117	110	88	62	110	74
TOC	mg/l	30	30	27	27	28	33	22	25	27	23	26	25
Total Solids	mg/l	128	130	110	104	140	182	178	236	154	130	122	138
Total Volatile Solids	mg/l	51.0	74	56	54	42	106	106	46	52	44	64	62
Total Suspended Solids	mg/l	58.7	37	47	65.5	58	48.9	55	66.7	50	50	37	80.6
Total Vol.Sus.Solids	mg/l	38.6	21	21	48.7	27	25	23	22.7	20.8	18	22	52.7
Total Dissolved Solids	mg/l	77.1	79	73	68.4	94	78.3	89	76	94.4	92	82	74.2
Total Vol.Dis. Solids	mg/l	20	25	22	21.1	30	29.3	31	18.7	27.8	27	35	34.4
Settleable Solids	mg/l	2.0	1.5	2.0	2.1	1.5	2.0	2.0	1.0	0.5	1.0	1.0	3.5
Chloride	mg/l	14	15	13	12	17.5	14	14	13.5	17.5	16.5	16	13.5
Ammonia Nitrogen	mg/l	1.87	1.79	1.08	.81	.94	1.32	.77	.74	.95	.73	.85	.92
Oil and Grease	mg/l	11.4	2.7	10.6	1.2	9.0	10.9	6.1	8.0	6.6	1.9	0.1	4.9
Total Phenol	µg/l	29	17	38	36	39	47	35	120	22	17	39	31
Volatiles													
Methylene chloride	µg/l	ND	29.7	20.0	12.8	19.8	20.9	18.3	17.9	18.3	17.8	19.5	20.6
1,1,2,2-Tetrachloro-ethene	µg/l	ND	18.0	ND	ND	ND	ND	ND	ND	ND	ND	ND	ND
Chloroform	µg/l	ND	ND	ND	ND	ND	ND	ND	ND	10.2	ND	ND	ND
Toluene	µg/l	ND	ND	ND	ND	ND	ND	ND	ND	ND	ND	ND	ND
Acids*													
Base/Neutrals													
Bis(2-ethylhexyl) phthalate	µg/l	ND	ND	ND	ND	11.1	11.1	ND	ND	ND	ND	11.9	ND
Butyl benzyl phthalate	µg/l	ND	ND	ND	ND	ND	ND	ND	ND	ND	ND	ND	ND
Pesticides*													

*No pollutants detected above detection limit.
< - Less than
ND - Not detected

TABLE B-8. STORM 3 (1 DECEMBER 1981) RESULTS - NEWARK, NJ

		Rector Catchment				Saybrook Catchment							
Parameters	Units	CSO 1630 hr (94138)	CSO 1645 hr (94156)	CSO 1700 hr (94123)	CSO 1715 hr (94158)	CSO 1700 hr (94115)	CSO 1715 hr (94114)	CSO 1730 hr (94113)	CSO 1745 hr (94121)	CSO 1800 hr (94112)	CSO 1815 hr (94157)	CSO 1830 hr (94106)	CSO 1845 hr (94124)
Metals													
Cadmium	µg/l	ND	ND	ND	ND	ND	4	ND	ND	ND	ND	ND	ND
Chromium	µg/l	37	35	28	21	9	24	10	7	7	8	10	7
Copper	µg/l	50	50	48	54	50	59	58	53	38	36	44	42
Lead	µg/l	81	81	105	116	91	121	108	105	76	78	92	95
Mercury	µg/l	0.75	0.22	0.56	1.22	0.74	0.35	0.25	0.30	0.29	0.17	0.19	0.24
Nickel	µg/l	ND	ND	ND	ND	ND	ND	ND	ND	ND	ND	ND	ND
Silver	µg/l	7	6	ND	ND	ND	35	ND	ND	35	ND	ND	ND
Zinc	µg/l	154	150	174	206	188	222	226	190	195	157	182	156
Others													
Cyanide	µg/l	69	71	69	57	84	59	76	65	64	60	65	89
Non-Conventional Metals													
Aluminum	µg/l	476	474	581	461	880	1210	1570	1180	1030	813	953	885
Barium	µg/l	40	42	77	137	34	38	36	35	31	28	30	30
Iron	µg/l	1160	1130	1410	1090	1860	59	58	53	38	36	44	42
Manganese	µg/l	46	48	47	44	114	124	76	70	70	105	64	89
Calcium	mg/l	9	10	9	9	12	11	11	11	13	12	11	10
Magnesium	mg/l	ND	ND	ND	ND	3	3	3	ND	3	3	3	ND
Sodium	mg/l	9	9	8	6	10	9	8	8	11	10	9	8

< - Less than
ND - Not detected

TABLE B-8. STORM 3 (1 DECEMBER 1981) RESULTS - NEWARK, NJ

Parameter	Units	Precipitation Composite (94136)	Herbert Catchment CSO 1330 hr (94154)	CSO 1345 hr (94155)	CSO 1400 hr (94139)	CSO 1415 hr (94152)	CSO 1430 hr (94159)	CSO 1445 hr (94107)	CSO 1500 hr (94160)	CSO 1515 hr (94153)
Conventional/ Non-conventional										
BOD5	mg/l	8	140	143	99	128	128	123	122	87
COD	mg/l	14	276	358	264	216	180	190	152	184
TOC	mg/l	3	71	90	67	64	61	47	50	51
Total Solids	mg/l	16	246	378	218	206	170	168	164	158
Total Volatile Solids	mg/l	6.0	126	282	128	94	92	88	96	70
Total Suspended Solids	mg/l	5.0	81.8	124.6	68.4	103	61.4	53.2	42.4	41
Total Vol.Sus.Solids	mg/l	3.0	52.7	89.5	66.7	75	50.6	29	27.1	27.9
Total Dissolved Solids	mg/l	11	109.1	98.2	112.3	123.3	71.1	112.9	84.7	60.7
Total Vol.Dis. Solids	mg/l	11	43.6	36.8	59.6	45	36.1	43.3	30.5	32.8
Settleable Solids	mg/l	0	4.5	7.0	4.0	4.0	3.0	2.5	2.0	8.0
Chloride	ml/l	2.5	12.5	13	16.5	15	13	11.5	12.5	12.5
Ammonia Nitrogen	mg/l	.35	4.04	4.04	6.1	3.6	2.63	2.18	2.83	2.36
Oil and Grease	mg/l	0	4.9	23.3	5.0	19.1	22	4.8	8.7	5.0
Total Phenol	µg/l	29	40	40	36	30	23	40	27	33
Volatiles										
Methylene chloride	µg/l	12.5	186	32.4	49.2	10.4	ND	13.3	34.2	46.2
1,1,2,2-Tetrachloro-ethene	µg/l	ND	ND	ND	ND	14.5	ND	ND	ND	ND
Chloroform	µg/l	ND	ND	ND	ND	ND	ND	ND	ND	ND
Toluene	µg/l	ND	28.7	22.4	14.9	ND	ND	ND	ND	ND
Acids*										
Base/Neutrals										
Bis(2-ethylhexyl) phthalate	µg/l	ND	20.1	24.1	12.8	11.2	ND	11.7	12.3	10.9
Butyl benzyl phthalate	µg/l	ND	ND	ND	ND	ND	ND	ND	ND	35.0
Pesticides*										

*No pollutants detected above detection limit.
< - Less than
ND - Not detected

TABLE B-8. STORM 3 (1 DECEMBER 1981) RESULTS - NEWARK, NJ

Parameter	Units	Precipitation Composite (94136)	Herbert Catchment CSO 1330 hr (94154)	CSO 1345 hr (94155)	CSO 1400 hr (94139)	CSO 1415 hr (94152)	CSO 1430 hr (94159)	CSO 1445 hr (94107)	CSO 1500 hr (94160)	CSO 1515 hr (94153)
Metals										
Cadmium	µg/l	ND	ND	ND	ND	ND	ND	ND	ND	ND
Chromium	µg/l	ND	ND	ND	ND	ND	ND	ND	ND	ND
Copper	µg/l	10	88	115	85	77	57	50	66	57
Lead	µg/l	ND	137	112	77	85	89	92	79	98
Mercury	µg/l	0.12	0.71	0.30	0.22	0.22	0.18	0.22	0.14	0.16
Nickel	µg/l	ND	11	ND	ND	ND	ND	ND	12	ND
Silver	µg/l	ND	ND	7	ND	ND	ND	ND	ND	8
Zinc	µg/l	92	239	330	209	175	159	139	145	151
Others										
Cyanide	µg/l	52	107	224	112	80	94	105	71	85
Non-Conventional Metals										
Aluminum	µg/l	132	1125	1180	833	850	608	684	505	1020
Barium	µg/l	3	39	39	25	27	22	21	24	26
Iron	µg/l	10	2285	2220	1690	1440	1280	1310	1100	1500
Manganese	µg/l	6	167	142	118	105	97	98	94	96
Calcium	mg/l	ND	10	10	9	9	8	7	8	8
Magnesium	mg/l	ND	ND	ND	ND	ND	ND	ND	ND	ND
Sodium	mg/l	ND	9	10	14	12	9	9	8	10

ND - Not detected