AP42315
Supplement 15 c.2

SUPPLEMENT NO. 15

FOR

COMPILATION OF AIR POLLUTANT EMISSION FACTORS, THIRD EDITION (INCLUDING SUPPLEMENTS 1-7)

Environmental Protection Agency
Region V, Library
230 South Dearborn Street
Chicago, Illinois 60604

U.S. ENVIRONMENTAL PROTECTION AGENCY
Office of Air, Noise and Radiation
Office of Air Quality Planning and Standards
Research Triangle Park, North Carolina 27711

January 1984

U.S. Environmental Protection Agency

INSTRUCTIONS FOR INSERTING

SUPPLEMENT 15

INTO

AP-42

Add page x. New Publications In Series
Pages 3.3.4-1 and 3.3.4-2 replace same. Editorial Changes.
Pages 4.2.2.1-1 through 4.2.2.1-5,
4.2.2.2-1 through 4.2.2.2-5,
4.2.2.3-1 through 4.2.2.3-3,
4.2.2.4-1 through 4.2.2.4-6,
4.2.2.5-1 through 4.2.2.5-5,
4.2.2.6-1 through 4.2.2.6-4, and
4.2.2.7-1 through 4.2.2.7-3 replace pp. 4.2.2-1 through 4.2.2-31. New Format.
Pages 4.8-3 and 4.8-4 replace same. Editorial Changes.
Pages 6.6-3 and 6.6-4 replace same. Editorial Changes.
Pages 6.8-1 through 6.8-8 replace pp. 6.8-1 through 6.8-4. Major Revision.
Pages 6.14-1 through 6.14-7 replace pp. 6.14-1 and 6.14-2. Major Revision.
Pages 7.1-1 through 7.1-8 replace pp. 7.1-1 through 7.1-9. Technical Clarification.
Pages 7.3-1 through 7.3-12 replace pp. 7.3-1 through 7.3-10. Major Revision.
Pages 8.1-7 and 8.1-8 replace same. Editorial Changes.
Pages 8.4-1 through 8.4-4 replace pp. 8.4-1 and 8.4-2. Major Revision.
Pages 11.2.2-1 and 11.2.2-2 replace same. Editorial Changes.

PUBLICATIONS IN SERIES (CONT'D)

Issuance		Release Date
Supplement No. 13		8/82
Section 1.1	Bituminous and Subbituminous Coal Combustion	
Section 1.3	Fuel Oil Combustion	
Section 1.4	Natural Gas Combustion	
Section 1.5	Liquefied Petroleum Gas Combustion	
Section 1.6	Wood Waste Combustion In Boilers	
Section 1.7	Lignite Combustion	
Section 3.3.4	Stationary Large Bore Diesel and Dual Fuel Engines	
Section 4.2.2.8	Automobile and Light Duty Truck Surface Coating	
Section 4.2.2.9	Pressure Sensitive Tapes and Labels	
Section 4.2.2.10	Metal Coil Surface Coating	
Section 4.11	Textile Fabric Printing	
Section 5.16	Sodium Carbonate	
Section 5.20	Synthetic Rubber	
Section 7.15	Storage Battery Production	
Section 8.23	Metallic Minerals Processing	
Supplement No. 14		5/83
Section 1.2	Anthracite Coal Combustion	
Section 1.6	Wood Waste Combustion In Boilers	
Section 1.9	Residential Fireplaces	
Section 1.10	Wood Stoves	
Section 2.4	Open Burning	
Section 4.2.2.11	Large Appliance Surface Coating	
Section 4.2.2.12	Metal Furniture Surface Coating	
Section 5.1	Adipic Acid	
Section 5.2	Synthetic Ammonia	
Section 5.3	Carbon Black	
Section 5.4	Charcoal	
Section 5.6	Explosives	
Section 5.10	Paint And Varnish	
Section 5.12	Phthalic Anhydride	
Section 5.14	Printing Ink	
Section 5.15	Soap And Detergents	
Section 5.21	Terephthalic Acid	
Section 5.24	Maleic Anhydride	
Section 7.1	Primary Aluminum Production	
Section 7.5	Iron And Steel Production	
Section 8.14	Gypsum Manufacturing	
Section 8.19	Construction Aggregate Processing	
Section 8.19.1	Sand And Gravel Processing	
Section 8.22	Taconite Ore Processing	
Section 8.24	Western Surface Coal Mining	
Section 11.2	Fugitive Dust Sources	
Section 11.2.1	Unpaved Roads	
Section 11.2.2	Agricultural Tilling	
Section 11.2.3	Aggregate Handling And Storage	
Section 11.2.6	Industrial Paved Roads	

PUBLICATIONS IN SERIES (CONT'D)

Issuance		Release Date
Supplement 15		1/84
Section 3.3.4	Stationary Large Bore Diesel And Dual Fuel Engines	
Section 4.2.2.1	General Industrial Surface Coating	
Section 4.2.2.2	Can Coating	
Section 4.2.2.3	Magnet Wire Coating	
Section 4.2.2.4	Other Metal Coating	
Section 4.2.2.5	Flat Wood Interior Panel Coating	
Section 4.2.2.6	Paper Coating	
Section 4.2.2.7	Fabric Coating	
Section 4.8	Drum Burning	
Section 6.6	Fish Processing	
Section 6.8	Ammonium Nitrate	
Section 6.14	Urea	
Section 7.1	Primary Aluminum Production	
Section 7.3	Primary Copper Smelting	
Section 8.1	Asphaltic Concrete Plants	
Section 8.4	Calcium Carbide Manufacturing	
Section 11.2.2	Agricultural Tilling	

3.3.4 STATIONARY LARGE BORE DIESEL AND DUAL FUEL ENGINES

3.3.4.1 General

The primary domestic use of large bore diesel engines, i.e., those greater than 560 cubic inch displacement per cylinder (CID/CYL), is in oil and gas exploration and production. These engines, in groups of three to five, supply mechanical power to operate drilling (rotary table), mud pumping and hoisting equipment, and may also operate pumps or auxiliary power generators. Another frequent application of large bore diesels is electricity generation for both base and standby service. Smaller uses include irrigation, hoisting and nuclear power plant emergency cooling water pump operation.

Dual fuel engines were developed to obtain compression ignition performance and the economy of natural gas, using a minimum of 5 to 6 percent diesel fuel to ignite the natural gas. Dual fuel large bore engines (greater than 560 CID/CYL) have been used almost exclusively for prime electric power generation.

3.3.4.2 Emissions and Controls

The primary pollutant of concern from large bore diesel and dual fuel engines is NO_x, which readily forms in the high temperature, pressure and excess air environment found in these engines. Lesser amounts of carbon monoxide and hydrocarbons are also emitted. Sulfur dioxide emissions will usually be quite low because of the negligible sulfur content of diesel fuels and natural gas.

The major variables affecting NO_x emissions from diesel engines are injection timing, manifold air temperature, engine speed, engine load and ambient humidity. In general, NO_x emissions decrease with increasing humidity.

Because NO_x is the primary pollutant from diesel and dual fuel engines, control measures to date have been directed mainly at limiting NO_x emissions. The most effective NO_x control technique for diesel engines is fuel injection retard, achieving reductions (at eight degrees of retard) of up to 40 percent. Additional NO_x reductions are possible with combined retard and air/fuel ratio change. Both retarded fuel injection (8°) and air/fuel ratio change of five percent are also effective in reducing NO_x emissions from dual fuel engines, achieving nominal NO_x reductions of about 40 percent and maximum NO_x reductions of up to 70 percent.

Other NO_x control techniques exist but are not considered feasible because of excessive fuel penalties, capital cost, or maintenance or operational problems. These techniques include exhaust gas recirculation (EGR), combustion chamber modification, water injection and catalytic reduction.

TABLE 3.3.4-1. EMISSION FACTORS FOR STATIONARY LARGE BORE DIESEL AND DUAL FUEL ENGINES[a]

EMISSION FACTOR RATING: C

Engine type	Particulate[b]	Nitrogen oxides[c]	Carbon monoxide	VOC[d]		Sulfur dioxide[e]
				Methane	Nonmethane	
Diesel						
$lb/10^3$ hph	2.4	24	6.4	0.07	0.63	2.8
g/hph	1.1	11	2.9	0.03	0.29	1.3
g/kWh	1.5	15	3.9	0.04	0.04	1.7
$lb/10^3$ gal[f]	50	500	130	1	13	60
g/l[e]	6	60	16	0.2	1.6	7.2
Dual fuel						
$lb/10^3$ hph	NA	18	5.9	4.7	1.5	0.70
g/hph	NA	8	2.7	2.1	0.7	0.32
g/kWh	NA	11	3.6	2.9	0.9	0.43

[a]Representative uncontrolled levels for each fuel, determined by weighting data from several manufactures. Weighting based on % of total horsepower sold by each manufacturer during a five year period. NA = not available.
[b]Emission Factor Rating: E. Approximation based on test of a medium bore diesel. Emissions are minimum expected for engine operating at 50 - 100% full rated load. At 0% load, emissions would increase to 230 g/l.
[c]Measured as NO_2. Factors are for engines operated at rated load and speed.
[d]Nonmethane VOC is 90% of total VOC from diesel engines but only 25% of total VOC emissions from dual fuel engines. Individual chemical species within the nonmethane fraction are not identified. Molecular weight of nonmethane gas stream is assumed to be that of methane.
[e]Based on assumed sulfur content of 0.4% by weight for diesel fuel and 0.46 g/sc (0.20 gr/scf) for pipeline quality natural gas. Dual fuel SO_2 emissions based on 5% oil/95% gas mix. Emissions should be adjusted for other fuel ratios.
[f]These factors calculated from the above factors assuming a heating value of 40 MJ/l (145,000 Btu/gal) for oil, 41 MJ/scm (1100 Btu/scf) for natural gas, and an average fuel consumption of 9.9 MJ/kWh (7000 Btu/hph).

References for Section 3.3.4

1. Standards Support and Environmental Impact Statement Volume I - Stationary Internal Combustion Engines, EPA-450/2-78-125a, U. S. Environmental Protection Agency, Research Triangle Park, NC, July 1979.

2. Telephone communication between William H. Lamason, Office of Air Quality Planning and Standards, U. S. Environmental Protection Agency, Research Triangle Park, NC, and John H. Wasser, Office of Research and Development, U. S. Environmental Protection Agency, Research Triangle Park, NC, July 15, 1983.

4.2.2 INDUSTRIAL SURFACE COATING

4.2.2.1 GENERAL INDUSTRIAL SURFACE COATING[1-4]

Process Description - Surface coating is the application of decorative or protective materials in liquid or powder form to substrates. These coatings normally include general solvent type paints, varnishes, lacquers and water thinned paints. After application of coating by one of a variety of methods such as brushing, rolling, spraying, dipping and flow coating, the surface is air and/or heat dried to remove the volatile solvents from the coated surface. Powder type coatings can be applied to a hot surface or can be melted after application and caused to flow together. Other coatings can be polymerized after application by thermal curing with infrared or electron beam systems.

Coating Operations - There are both "toll" ("independent") and "captive" surface coating operations. Toll operations fill orders to various manufacturer specifications, and thus change coating and solvent conditions more frequently than do captive companies, which fabricate and coat products within a single facility and which may operate continuously with the same solvents. Toll and captive operations differ in emission control systems applicable to coating lines, because not all controls are technically feasible in toll situations.

Coating Formulations - Conventional coatings contain at least 30 volume percent solvents to permit easy handling and application. They typically contain 70 to 85 percent solvents by volume. These solvents may be of one component or of a mixture of volatile ethers, acetates, aromatics, cellosolves, aliphatic hydrocarbons and/or water. Coatings with 30 volume percent of solvent or less are called low solvent or "high solids" coatings.

Waterborne coatings, which have recently gained substantial use, are of several types: water emulsion, water soluble and colloidal dispersion, and electrocoat. Common ratios of water to solvent organics in emulsion and dispersion coatings are 80/20 and 70/30.

Two part catalyzed coatings to be dried, powder coatings, hot melts, and radiation cured (ultraviolet and electron beam) coatings contain essentially no volatile organic compounds (VOC), although some monomers and other lower molecular weight organics may volatilize.

Depending on the product requirements and the material being coated, a surface may have one or more layers of coating applied. The first coat may be applied to cover surface imperfections or to assure adhesion of the coating. The intermediate coats usually provide the required color, texture or print, and a clear protective topcoat is often added. General coating types do not differ from those described, although the intended use and the material to be coated determine the composition and resins used in the coatings.

Coating Application Procedures - Conventional spray, which is air atomized and usually hand operated, is one of the most versatile coating methods. Colors can be changed easily, and a variety of sizes and shapes can be painted under

many operating conditions. Conventional, catalyzed or waterborne coatings can be applied with little modification. The disadvantages are low efficiency from overspray and high energy requirements for the air compressor.

In hot airless spray, the paint is forced through an atomizing nozzle. Since volumetric flow is less, overspray is reduced. Less solvent is also required, thus reducing VOC emissions. Care must be taken for proper flow of the coating, to avoid plugging and abrading of the nozzle orifice. Electrostatic spray is most efficient for low visocity paints. Charged paint particles are attracted to an oppositely charged surface. Spray guns, spinning discs or bell shaped atomizers can be used to atomize the paint. Application efficiencies of 90 to 95 percent are possible, with good "wraparound" and edge coating. Interiors and recessed surfaces are difficult to coat, however.

Roller coating is used to apply coatings and inks to flat surfaces. If the cylindrical rollers move in the same direction as the surface to be coated, the system is called a direct roll coater. If they rotate in the opposite direction, the system is a reverse roll coater. Coatings can be applied to any flat surface efficiently and uniformly and at high speeds. Printing and decorative graining are applied with direct rollers. Reverse rollers are used to apply fillers to porous or imperfect substrates, including papers and fabrics, to give a smooth uniform surface.

Knife coating is relatively inexpensive, but it is not appropriate for coating unstable materials, such as some knit goods, or when a high degree of accuracy in the coating thickness is required.

Rotogravure printing is widely used in coating vinyl imitation leathers and wallpaper, and in the application of a transparent protective layer over the printed pattern. In rotogravure printing, the image area is recessed, or "intaglio", relative to the copper plated cylinder on which the image is engraved. The ink is picked up on the engraved area, and excess ink is scraped off the nonimage area with a "doctor blade". The image is transferred directly to the paper or other substrate, which is web fed, and the product is then dried.

Dip coating requires that the surface of the subject be immersed in a bath of paint. Dipping is effective for coating irregularly shaped or bulky items and for priming. All surfaces are covered, but coating thickness varies, edge blistering can occur, and a good appearance is not always achieved.

In flow coating, materials to be coated are conveyed through a flow of paint. Paint flow is directed, without atomization, toward the surface through multiple nozzles, then is caught in a trough and recycled. For flat surfaces, close control of film thickness can be maintained by passing the surface through a constantly flowing curtain of paint at a controlled rate.

Emissions and Controls - Essentially all of the VOC emitted from the surface coating industry is from the solvents which are used in the paint formulations, used to thin paints at the coating facility or used for cleanup. All unrecovered solvent can be considered potential emissions. Monomers and low molecular weight organics can be emitted from those coatings that do not include solvents, but such emissions are essentially negligible.

Emissions from surface coating for an uncontrolled facility can be estimated by assuming that all VOC in the coatings is emitted. Usually, coating consumption volume will be known, and some information about the types of coatings and solvents will be available. The choice of a particular emission factor will depend on the coating data available. If no specific information is given for the coating, it may be estimated from the data in Table 4.2.2.1-2.

TABLE 4.2.2.1-1. VOC EMISSION FACTORS FOR UNCONTROLLED SURFACE COATING[a]

EMISSION FACTOR RATING: B

Available information on coating	Emissions of VOC[b]	
	kg/liter of coating	lb/gal of coating
Conventional or waterborne paints		
VOC, wt % (d)	$\frac{d \cdot \text{coating density}^c}{100}$	$\frac{d \cdot \text{coating density}^c}{100}$
VOC, vol % (V)	$\frac{V \cdot 0.88^d}{100}$	$\frac{V \cdot 7.36^d}{100}$
Waterborne paint		
VOC as weight % of total volatiles - including water (X); total volatiles as weight % of coating (d)	$\frac{d \cdot X \cdot \text{coating density}^c}{100}$	$\frac{d \cdot X \cdot \text{coating density}^c}{100}$
VOC as volume % of total volatiles - including water (Y); total volatiles as volume % of coating (V)	$\frac{V \cdot Y \cdot 0.88^d}{100}$	$\frac{V \cdot Y \cdot 7.36^d}{100}$

[a]Material balance, when coatings volume use is known.

[b]For special purposes, factors expressed kg/l of coating less water may be desired. These may be computed as follows:

$$\underline{\text{Factor as kg/l of coating}}$$

$$= \text{Factor as kg/l of coating less water } 1 - \frac{\text{volume \% water}}{100}$$

[c]If coating density is not known, it can be estimated from the information in Table 4.2.2.1-2.

[d]The values 0.88 (kg/l) and 7.36 (lb/gal) use the average density of solvent in coatings. Use the densities of the solvents in the coatings actually used by the source, if known.

TABLE 4.2.2.1-2. TYPICAL DENSITIES AND SOLIDS CONTENTS OF COATINGS

Type of coating	Density		Solids
	kg/liter	lb/gal	(volume %)
Enamel, air dry	0.91	7.6	39.6
Enamel, baking	1.09	9.1	42.8
Acrylic enamel	1.07	8.9	30.3
Alkyd enamel	0.96	8.0	47.2
Primer surfacer	1.13	9.4	49.0
Primer, epoxy	1.26	10.5	57.2
Varnish, baking	0.79	6.6	35.3
Lacquer, spraying	0.95	7.9	26.1
Vinyl, roller coat	0.92	7.7	12.0
Polyurethane	1.10	9.2	31.7
Stain	0.88	7.3	21.6
Sealer	0.84	7.0	11.7
Magnet wire enamel	0.94	7.8	25.0
Paper coating	0.92	7.7	22.0
Fabric coating	0.92	7.7	22.0

[a]Reference 1.

All solvents separately purchased as solvent that are used in surface coating operations and are not recovered subsequently can be considered potential emissions. Such VOC emissions at a facility can result from onsite dilution of coatings with solvent, from "makeup solvents" required in flow coating and, in some instances, dip coating, and from the solvents used for cleanup. Makeup solvents are added to coatings to compensate for standing losses, concentration or amount, and thus to bring the coating back to working specifications. Solvent emissions should be added to VOC emissions from coatings to get total emissions from a coating facility.

Typical ranges of control efficiencies are given in Table 4.2.2.1-3. Emission controls normally fall under one of three categories - modification in paint formula, process changes, or addon controls. These are discussed further in the specific subsections which follow.

TABLE 4.2.2.1-3. CONTROL EFFICIENCIES FOR SURFACE COATING OPERATIONS[a]

Control option	Reduction[b] (%)
Substitute waterborne coatings	60-95
Substitute low solvent coatings	40-80
Substitute powder coatings	92-98
Add afterburners/incinerators	95

[a]References 2-4.
[b]Expressed as % of total uncontrolled emission load.

References for Section 4.2.2.1

1. Controlling Pollution from the Manufacturing and Coating of Metal Products: Metal Coating Air Pollution Control, EPA-625/3-77-009, U. S. Environmental Protection Agency, Cincinnati, OH, May 1977.

2. H. R. Powers, "Economic and Energy Savings through Coating Selection", The Sherwin-Williams Company, Chicago, IL, February 8, 1978.

3. Air Pollution Engineering Manual, Second Edition, AP-40, U. S. Environmental Protection Agency, Research Triangle Park, NC, May 1973. Out of Print.

4. Products Finishing, 41(6A):4-54, March 1977.

4.2.2.2 CAN COATING[1-4]

Process Description - Cans may be made from a rectangular sheet (body blank) and two circular ends (three piece cans), or they can be drawn and wall ironed from a shallow cup to which an end is attached after the can is filled (two piece cans). There are major differences in coating practices, depending on the type of can and the product packaged in it. Figure 4.2.2.2-1 depicts a three piece can sheet printing operation.

There are both "toll" and "captive" can coating operations. The former fill orders to customer specifications, and the latter coat the metal for products fabricated within one facility. Some can coating operations do both toll and captive work, and some plants fabricate just can ends.

Three piece can manufacturing involves sheet coating and can fabricating. Sheet coating includes base coating and printing or lithographing, followed by curing at temperatures of up to 220°C (425°F). When the sheets have been formed into cylinders, the seam is sprayed, usually with a lacquer, to protect the exposed metal. If they are to contain an edible product, the interiors are spray coated, and the cans baked up to 220°C (425°F).

Two piece cans are used largely by beer and other beverage industries. The exteriors may be reverse roll coated in white and cured at 170 to 200°C (325 to 400°F). Several colors of ink are then transferred (sometimes by lithographic printing) to the cans as they rotate on a mandrel. A protective varnish may be roll coated over the inks. The coating is then cured in a single or multipass oven at temperatures of 180 to 200°C (350 to 400°F). The cans are spray coated on the interior and spray and/or roll coated on the exterior of the bottom end. A final baking at 110 to 200°C (225 to 400°F) completes the process.

Emissions and Controls - Emissions from can coating operations depend on composition of the coating, coated area, thickness of coat and efficiency of application. Post-application chemical changes, and nonsolvent contaminants like oven fuel combustion products, may also affect the composition of emissions. All solvent used and not recovered can be considered potential emissions.

Sources of can coating VOC emissions include the coating area and the oven area of the sheet base and lithographic coating lines, the three piece can side seam and interior spray coating processes, and the two piece can coating and end sealing compound lines. Emission rates vary with line speed, can or sheet size, and coating type. On sheet coating lines, where the coating is applied by rollers, most solvent evaporates in the oven. For other coating processes, the coating operation itself is the major source. Emissions can be estimated from the amount of coating applied by using the factors in Table 4.2.2.1-1 or, if the number and general nature of the coating lines are known, from Table 4.2.2.2-1.

Incineration and the use of waterborne and low solvent coatings both reduce organic vapor emissions. Other technically feasible control options, such as electrostatically sprayed powder coatings, are not presently applicable to the whole industry. Catalytic and thermal incinerators both can be used,

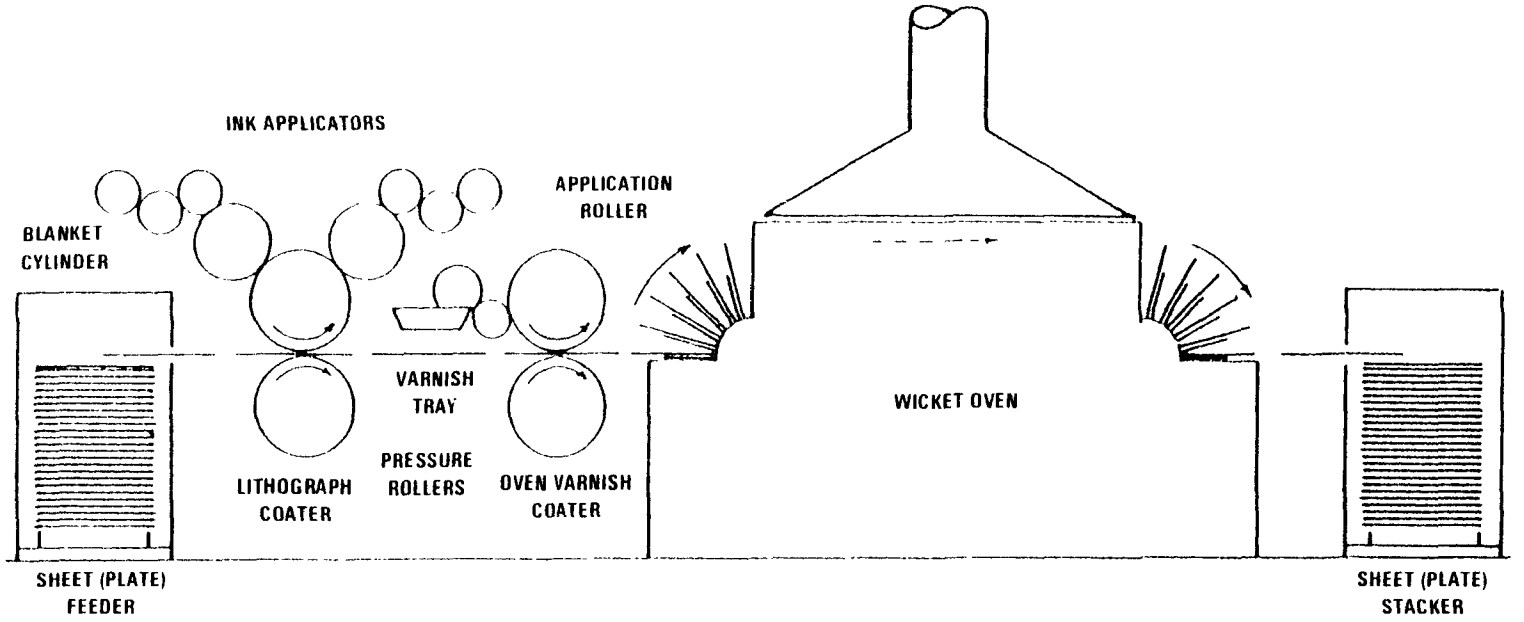

Figure 4.2.2 2-1 Three piece can sheet printing operation.[7]

TABLE 4.2.2.2-1. VOC EMISSION FACTORS FOR CAN COATING PROCESSES[a]

EMISSION FACTOR RATING: B

Process	Typical emissions from coating line[b]		Estimated fraction from coater area (%)	Estimated fraction from oven (%)	Typical organic emissions[c]	
	lb/hr	kg/hr			Mg/yr	ton/yr
Three piece can sheet base coating line	112	51	9-12	88-91	160	176
Three piece can sheet lithographic coating line	65	30	8-11	89-92	50	55
Three piece beer and beverage can - side seam spray coating process	12	5	100	air dried	18	20
Three piece beer and beverage can - interior body spray coating process	54	25	75-85	15-25	80	88
Two piece can coating line	86	39	NA	NA	260	287
Two piece can end sealing compound line	8	4	100	air dried	14	15

[a]Reference 3. NA = not available.
[b]Organic solvent emissions will vary according to line speed, size of can or sheet being coated, and type of coating used.
[c]Based upon normal operating conditions.

TABLE 4.2.2.2-2. CONTROL EFFICIENCIES FOR CAN COATING LINES[a]

Affected facility[b]	Control option	Reduction[c] (%)
Two Piece Can Lines		
Exterior coating	Thermal and catalytic incineration	90
	Waterborne and high solids coating	60-90
	Ultraviolet curing	≤100
Interior spray coating	Thermal and catalytic incineration	90
	Waterborne and high solids coating	60-90
	Powder coating	100
	Carbon adsorption	90
Three Piece Can Lines		
Sheet coating lines		
Exterior coating	Thermal and catalytic incineration	90
	Waterborne and high solids coating	60-90
	Ultraviolet curing	≤100
Interior spray coating	Thermal and catalytic incineration	90
	Waterborne and high solids coating	60-90
Can fabricating lines		
Side seam spray coating	Waterborne and high solids coating	60-90
	Powder (only for uncemented seams)	100
Interior spray coating	Thermal and catalytic incineration	90
	Waterborne and high solids coating	60-90
	Powder (only for uncemented seams)	100
	Carbon adsorption	90
End Coating Lines		
Sealing compound	Waterborne and high solids coating	70-95
Sheet coating	Carbon adsorption	90
	Thermal and catalytic incineration	90
	Waterborne and high solids coating	60-90

[a]Reference 3.
[b]Coil coating lines consist of coaters, ovens and quench areas. Sheet, can and end wire coating lines consist of coaters and ovens.
[c]Compared to conventional solvent base coatings used without any added

primers, backers (coatings on the reverse or backside of the coil), and some waterborne low to medium gloss topcoats have been developed that equal the performance of organic solventborne coatings for aluminum but have not yet been applied at full line speed in all cases. Waterborne coatings for other metals are being developed.

Available control technology includes the use of addon devices like incinerators and carbon adsorbers and a conversion to low solvent and ultraviolet curable coatings. Thermal and catalytic incinerators both may be used to control emissions from three piece can sheet base coating lines, sheet lithographic coating lines, and interior spray coating. Incineration is applicable to two piece can coating lines. Carbon adsorption is most acceptable to low temperature processes which use a limited number of solvents. Such processes include two and three piece can interior spray coating, two piece can end sealing compound lines, and three piece can side seam spray coating.

Low solvent coatings are not yet available to replace all the organic solventborne formulations presently used in the can industry. Waterborne basecoats have been successfully applied to two piece cans. Powder coating technology is used for side seam coating of noncemented three piece cans.

Ultraviolet curing technology is available for rapid drying of the first two colors of ink on three piece can sheet lithographic coating lines.

References for Section 4.2.2.2

1. T. W. Hughes, et al., Source Assessment: Prioritization of Air Pollution from Industrial Surface Coating Operations, EPA-650/2-75-019a, U. S. Environmental Protection Agency, Research Triangle Park, NC, November 1975.

2. Control of Volatile Organic Emissions from Existing Stationary Sources, Volume I: Control Methods for Surface Coating Operations, EPA-450/2-76-028, U. S. Environmental Protection Agency, Research Triangle Park, NC, May 1977.

3. Control of Volatile Organic Emissions from Existing Stationary Sources, Volume II: Surface Coating of Cans, Coils, Paper Fabrics, Automobiles, and Light Duty Trucks, EPA-450/2-77-008, U. S. Environmental Protection Agency, Research Triangle Park, NC, May 1977.

4. Air Pollution Control Technology Applicable to 26 Source of Volatile Organic Compounds, Office of Air Quality Planning and Standards, U. S. Environmental Protection Agency, Research Triangle Park, NC, May 27, 1977. Unpublished.

4.2.2.3 MAGNET WIRE COATING[1]

Process Description - Magnet wire coating is applying a coat of electrically insulating varnish or enamel to aluminum or copper wire used in electrical machinery. The wire is usually coated in large plants that both draw and insulate it and then sell it to electrical equipment manufacturers. The wire coating must meet rigid electrical, thermal and abrasion specifications.

Figure 4.2.2.3-1 shows a typical wire coating operation. The wire is unwound from spools and passed through an annealing furnace. Annealing softens the wire and cleans it by burning off oil and dirt. Usually, the wire then passes through a bath in the coating applicator and is drawn through an orifice or coating die to scrape off the excess. It is then dried and cured in a two zone oven first at 200°, then 430°C (400 and 806°F). Wire may pass through the coating applicator and the oven as many as twelve times to acquire the necessary thickness of coating.

Emissions and Controls - Emissions from wire coating operations depend on composition of the coating, thickness of coat and efficiency of application. Postapplication chemical changes, and nonsolvent contaminants such as oven fuel combustion products, may also affect the composition of emissions. All solvent used and not recovered can be considered potential emissions.

The exhaust from the oven is the most important source of solvent emissions in the wire coating plant. Emissions from the applicator are comparatively low, because a dip coating technique is used. See Figure 4.2.2.3-1.

Volatile organic compound (VOC) emissions may be estimated from the factors in Table 4.2.2.1-1, if the coating usage is known and if the coater has no controls. Most wire coaters built since 1960 do have controls, so the information in the following paragraph may be applicable. Table 4.2.2.3-1 gives estimated emissions for a typical wire coating line.

TABLE 4.2.2.3-1 ORGANIC SOLVENT EMISSIONS FROM A TYPICAL WIRE COATING LINE[a]

Coating Line[b]		Annual Totals[c]	
kg/hr	lb/hr	Mg/yr	ton/yr
12	26	84	93

[a]Reference 1.
[b]Organic solvent emissions vary from line to line by size and speed of wire, number of wires per oven, and number of passes through oven. A typical line may coat 544 kg (1,200 lb) wire/day. A plant may have many lines.
[c]Based upon normal operating conditions of 7,000 hr/yr for one line without incinerator.

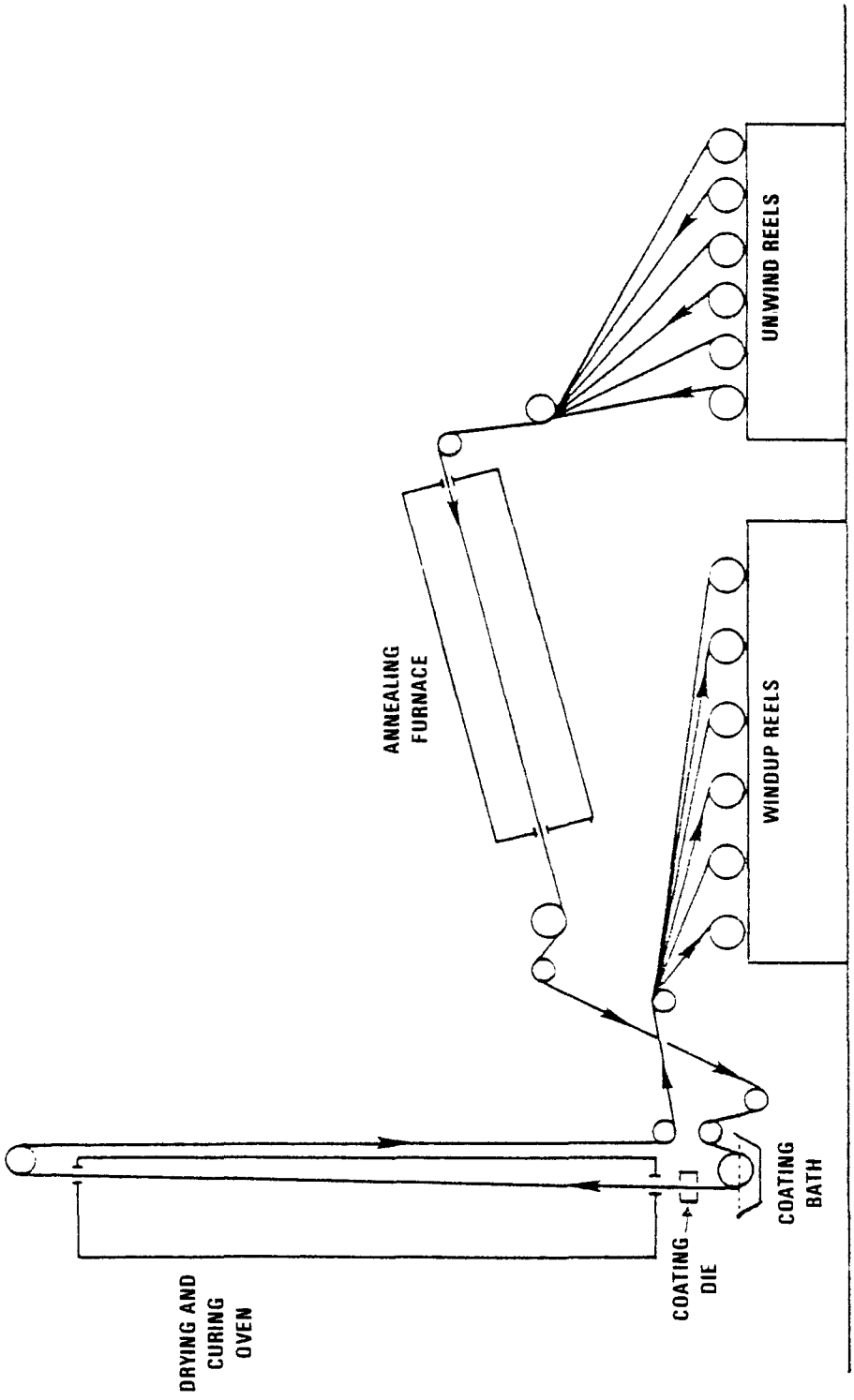

Figure 4.2.2.3-1. Wire coating line emission points[9]

Incineration is the only commonly used technique to control emissions from wire coating operations. Since about 1960, all major wire coating designers have incorporated catalytic incinerators into their oven designs, because of the economic benefits. The internal catalytic incinerator burns solvent fumes and circulates heat back into the wire drying zone. Fuel otherwise needed to operate the oven is eliminated or greatly reduced, as are costs. Essentially all solvent emissions from the oven can be directed to an incinerator with a combustion efficiency of a least 90 percent.

Ultraviolet cured coatings are available for special systems. Carbon adsorption is not practical. Use of low solvent coatings is only a potential control, because they have not yet been developed with properties that meet industry's requirements.

References for Section 4.2.2.3

1. Control of Volatile Organic Emissions from Existing Stationary Sources, Volume IV: Surface Coating for Insulation of Magnet Wire, EPA-450/2-77-033, U. S. Environmental Protection Agency, Research Triangle Park, NC, December 1977.

2. Controlled and Uncontrolled Emission Rates and Applicable Limitations for Eighty Processes, EPA Contract Number 68-02-1382, TRC of New England, Wethersfield, CT, September 1976.

4.2.2.4 OTHER METAL COATING[1-3]

Process Description - Large appliance, metal furniture and miscellaneous metal part and product coating lines have many common operations, similar emissions and emission points, and available control technology. Figure 4.2.2.4-1 shows a typical metal furniture coating line.

Large appliances include doors, cases, lids, panels and interior support parts of washers, dryers, ranges, refrigerators, freezers, water heaters, air conditioners, and associated products. Metal furniture includes both outdoor and indoor pieces manufactured for household, business or institutional use. "Miscellaneous parts and products" herein denotes large and small farm machinery, small appliances, commercial and industrial machinery, fabricated metal products and other industries that coat metal under Standard Industrial Classification (SIC) codes 33 through 39.

Large Appliances - The coatings applied to large appliances are usually epoxy, epoxy/acrylic or polyester enamels for the primer or single coat, and acrylic enamels for the topcoat. Coatings containing alkyd resins are also used. Prime and interior single coats are applied at 25 to 36 volume percent solids. Topcoats and exterior single coats are applied at 30 to 40 volume percent. Lacquers may be used to touch up any scratches that occur during assembly. Coatings contain 2 to 15 solvents, typical of which are esters, ketones, apliphatics, alcohols, aromatics, ethers and terpenes.

Small parts are generally dip coated, and flow or spray coating is used for larger parts. Dip and flow coating are performed in an enclosed room vented either by a roof fan or by an exhaust system adjoining the drain board or tunnel. Down or side draft booths remove overspray and organic vapors from prime coat spraying. Spray booths are also equipped with dry filters or a water wash to trap overspray.

Parts may be touched up manually with conventional or airless spray equipment. Then they are sent to a flashoff area (either open or tunneled) for about 7 minutes and are baked in a multipass oven for about 20 minutes at 180 to 230°C (350 to 450°F). At that point, large appliance exterior parts go on to the topcoat application area, and single coated interior parts are moved to the assembly area of the plant.

The topcoat, and sometimes primers, are applied by automated electrostatic disc, bell or other types of spray equipment. Topcoats often are more than one color, changed by automatically flushing out the system with solvent. Both the topcoat and touchup spray areas are designed with side or down draft exhaust control. The parts go through about a 10 minute flashoff period, followed by baking in a multipass oven for 20 to 30 minutes at 140 to 180°C (270 to 350°F).

Metal Furniture - Most metal furniture coatings are enamels, although some lacquers are used. The most common coatings are alkyds, epoxies and acrylics, which contain the same solvents used in large appliance coatings, applied at about 25 to 35 percent solids.

On a typical metal furniture coating line (see Figure 4.2.2.4-1), the prime coat can be applied with the same methods used for large appliances, but it may be cured at slightly lower temperatures, 150 to 200°C (300 to 400°F).

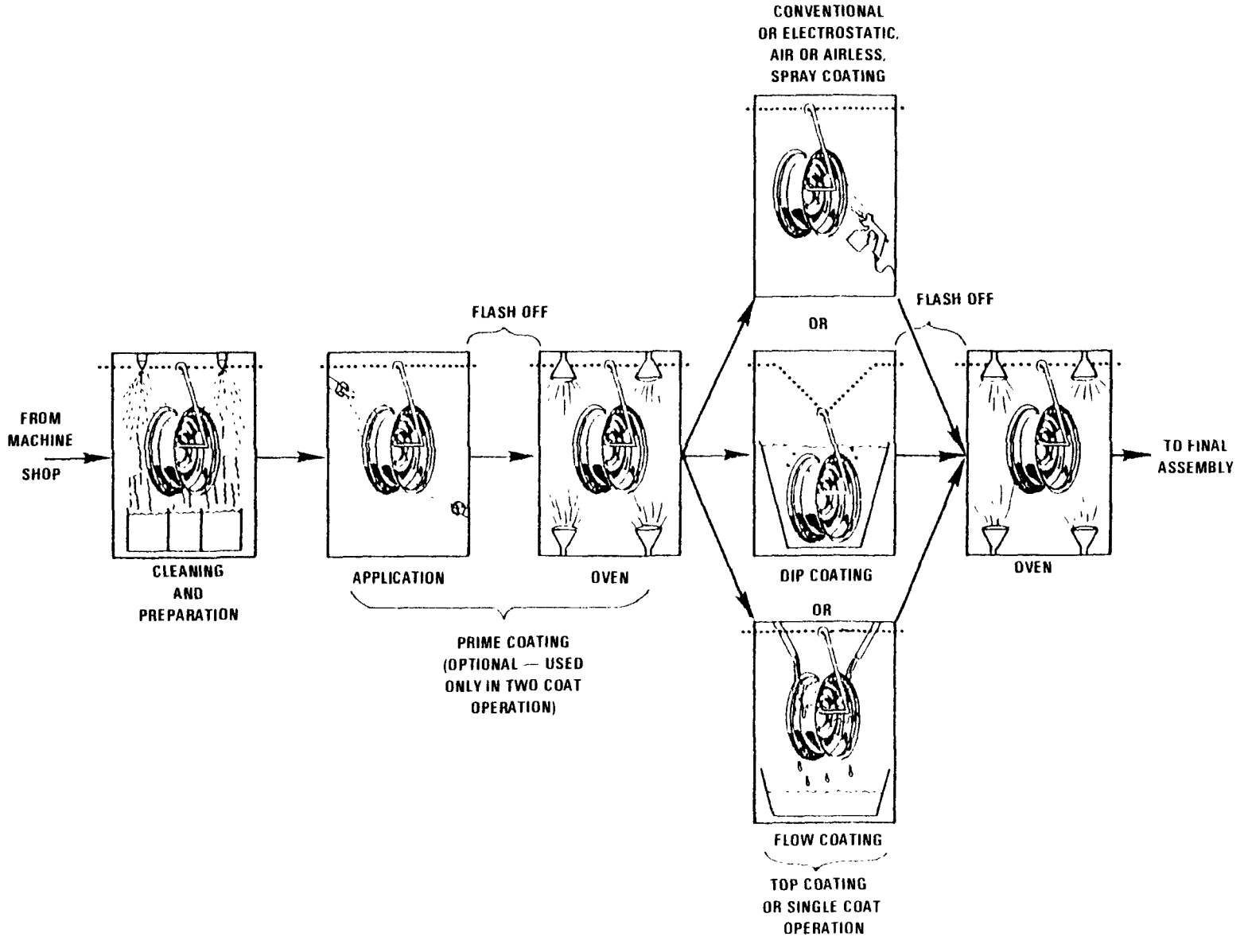

Figure 4 2 2.4-1 Metal product coating line emission points [11]

The topcoat, usually the only coat, is applied with electrostatic spray or with conventional airless or air spray. Most spray coating is manual, in contrast to large appliance operations. Flow coating or dip coating is done, if the plant generally uses only one or two colors on a line.

The coated furniture is usually baked, but in some cases it is air dried. If it is to be baked, it passes through a flashoff area into a multizone oven at temperatures ranging from 150 to 230°C (300 to 450°F).

Miscellaneous Metal Parts and Products - Both enamels (30 to 40 volume percent solids) and lacquers (10 to 20 volume percent solids) are used to coat miscellaneous metal parts and products, although enamels are more common. Coatings often are purchased at higher volume percent solids but are thinned before application (frequently with aromatic solvent blends). Alkyds are popular with industrial and farm machinery manufacturers. Most of the coatings contain several (up to 10) different solvents, including ketones, esters, alcohols, aliphatics, ethers, aromatics and terpenes.

Single or double coatings are applied in conveyored or batch operations. Spraying is usually employed for single coats. Flow and dip coating may be used when only one or two colors are applied. For two coat operations, primers are usually applied by flow or dip coating, and topcoats are almost always applied by spraying. Electrostatic spraying is common. Spray booths and areas are kept at a slight negative pressure to capture overspray.

A manual two coat operation may be used for large items like industrial and farm machinery. The coatings on large products are often air dried rather than oven baked, because the machinery, when completely assembled, includes heat sensitive materials and may be too large to be cured in an oven. Miscellaneous parts and products can be baked in single or multipass ovens at 150 to 230°C (300 to 450°F).

Emissions and Controls - Volatile organic compounds (VOC) are emitted from application and flashoff areas and the ovens of metal coating lines. See Figure 4.2.2.4-1. The composition of emissions varies among coating lines according to physical construction, coating method and type of coating applied, but distribution of emissions among individual operations has been assumed to be fairly constant, regardless of the type of coating line or the specific product coated, as Table 4.2.2.4-2 indicates. All solvent used can be considered potential emissions. Emissions can be calculated from the factors in Table 4.2.2.1-1 if coatings use is known, or from the factors in Table 4.2.2.4-2 if only a general description of the plant is available. For emissions from the cleansing and pretreatment area, see Section 4.6, Solvent Degreasing.

When powder coatings, which contain almost no VOC, are applied to some metal products as a coating modification, emissions are greatly reduced. Powder coatings are applied as single coats on some large appliance interior parts and as topcoat for kitchen ranges. They are also used on metal bed and chair frames, shelving and stadium seating, and they have been applied as single coats on small appliances, small farm machinery, fabricated metal product parts and industrial machinery components. The usual application methods are manual or automatic electrostatic spray.

TABLE 4.2.2.4-1. ESTIMATED CONTROL TECHNOLOGY EFFICIENCIES FOR METAL COATING LINES[a]

Control Technology	Application			Organic Emissions Reduction (%)		
	Large appliances	Metal furniture	Miscellaneous	Large appliances	Metal furniture	Miscellaneous
Powder	Top, exterior or interior single coat	Top or single coat	Oven baked single coat or topcoat	95-99[b]	95-99[b]	95-98[c]
Waterborne (spray, dip, flowcoat)	All applications	Prime, top or single coat	Oven baked single coat, primer and topcoat; air dried primer and topcoat	70-90[b]	60-90[b]	60-90[c]
Waterborne (electrodeposition)	Prime or interior single coat	Prime or single coat	Oven baked single coat and primer	90-95[b]	90-95[b]	90-95[c]
Higher solids (spray)	Top or exterior single coat and sound deadener	Top or single coat	Oven baked single coat and topcoat; air dried primer and topcoat	60-80[b]	50-80[b]	50-80[c]
Carbon absorption	Prime, single or topcoat application and flashoff areas	Prime, top or single coat application and flashoff areas	Oven baked single coat, primer and topcoat application and flash-off areas; air dried primer and topcoat application and drying areas	90[d]	90[d]	90[d]
Incineration	Prime, top or or single coat ovens	Ovens	Ovens	90[d]	90[d]	90+[d]

[a]References 1-3.
[b]the base case against which these % reductions were calculated is a high organic solvent coating which contains 25 volume % solids and 75 volume % organic solvents. Transfer efficiencies for liquid coatings are assumed to be about 80% for spray and 90% for dip or flowcoat, for powders about 93%, and for electrodeposition, 99%.
[c]Figures reflect the range of reduction possible. Actual reduction achieved depends on compositions of the conventional coating originally used and replacement low organic solvent coating, on transfer efficiency, and on relative film thicknesses of the two coatings.
[d]Reduction is only across the control device and does not account for capture efficiency.

TABLE 4.2.2.4-2. EMISSION FACTORS FOR TYPICAL METAL COATING PLANTS[a]

EMISSION FACTOR RATING: B

Type of Plant	Production Rate	Emissions		Estimated Emissions (%)	
		Mg/yr	ton/yr	Application and Flashoff	Ovens
Large appliances					
Prime and topcoat spray	768,000 units/yr	315	347	80	20
Metal furniture[b]					
Single spray[c]	48×10^6 ft^2/yr	500	550	65 - 80	20 - 35
Single dip[d]	23×10^6 ft^2/yr	160	176	50 - 60	40 - 50
Miscellaneous metal[b]					
Conveyor single flow[d]	16×10^6 ft^2/yr	111	122	50 - 60	40 - 50
Conveyor dip	16×10^6 ft^2/yr	111	122	40 - 50	50 - 60
Conveyor single spray[e]	16×10^6 ft^2/yr	200	220	70 - 80	20 - 30
Conveyor two coat, flow and spray	16×10^6 ft^2/yr	311	342	60 - 70	30 - 40
Conveyor two coat, dip and spray	16×10^6 ft^2/yr	311	342	60 - 70	30 - 40
Conveyor two coat, spray	16×10^6 ft^2/yr	400	440	70 - 80	30 - 30
Manual two coat, spray and air dry	8.5×10^6 ft^2/yr	212	233	100	0

[a]References 1-4.

[b]Estimated from area coated, assumed dry coating thickness of 1 mil, coating of 75% solvent by volume and 25% solids by volume, appropriate transfer efficiency (TE), and solvent density of 0.88 kg/liter (7.36 lb/gal). The equation to be used is:

$$E\ (\text{tons/yr}) = 2.29 \times 10^{-6}\ \text{area coated}\ (ft^2)\ \frac{V}{100 - V}\ \frac{1}{TE}$$

or

$$E\ (\text{Mg/yr}) = 2.09 \times 10^{-6}\ \text{area coated}\ (ft^2)\ \frac{V}{100 - V}\ \frac{1}{TE}$$

where V = VOC as volume %.

[c]Transfer efficiency assumed to be 60%, presuming the coater uses manual electrostatic equipment.

[d]Flow and dip coat transfer efficiencies assumed to be 90%.

[e]Transfer efficiency assumed to be 50%, presuming the coater uses electrostatic equipment but coats a wide range of product sizes and configurations.

Improving transfer efficiency is a method of reducing emissions. One such technique is the electrostatic application of the coating, and another is dip coating with waterborne paint. For example, many makers of large appliances are now using electrodeposition to apply prime coats to exterior parts and single coats to interiors, because this technique increases corrosion protection and resistance to detergents. Electrodeposition of these waterborne coatings is also being used at several metal furniture coating plants and at some farm, commercial machinery and fabricated metal products facilities.

Automated electrostatic spraying is most efficient, but manual and conventional methods can be used, also. Roll coating is another option on some miscellaneous parts. Use of higher solids coatings is a practiced technique for reduction of VOC emissions.

Carbon adsorption is technically feasible for collecting emissions from prime, top and single coat applications and flashoff areas. However, the entrained sticky paint particles are a filtration problem, and adsorbers are not commonly used.

Incineration is used to reduce organic vapor emissions from baking ovens for large appliances, metal furniture and miscellaneous products, and it is an option for control of emissions from application and flashoff areas.

Table 4.2.2.4-1 gives estimated control efficiencies for large appliance, metal furniture and miscellaneous metal part and product coating lines, and Table 4.2.2.4-2 gives their emission factors.

References for Section 4.2.2.4

1. Control of Volatile Organic Emissions from Existing Stationary Sources, Volume III: Surface Coating of Metal Furniture, EPA-450/2-77-032, U. S. Environmental Protection Agency, Research Triangle Park, NC, December 1977.

2. Control of Volatile Organic Emissions from Existing Stationary Sources, Volume V: Surface Coating of Large Appliances, EPA-450/2-77-034, U. S. Environmental Protection Agency, Research Triangle Park, NC, December 1977.

3. Control of Volatile Organic Emissions from Existing Stationary Sources, Volume V: Surface Coating of Miscellaneous Metal Parts and Products, EPA-450/2-78-015, U. S. Environmental Protection Agency, Research Triangle Park, NC, June 1978.

4. G. T. Helms, "Appropriate Transfer Efficiencies for Metal Furniture and Large Appliance Coating", Memorandum, Office of Air Quality Planning and Standards, U. S. Environmental Protection Agency, Research Triangle Park, NC, November 28, 1980.

4.2.2.5 FLAT WOOD INTERIOR PANEL COATING

Process Description[1] - Finished flat wood construction products are interior panels made of hardwood plywoods (natural and lauan), particle board, and hardboard.

Fewer than 25 percent of the manufacturers of such flat wood products coat the products in their plants, and in some of the plants that do coat, only a small percentage of total production is coated. At present, most coating is done by toll coaters who receive panels from manufacturers and undercoat or finish them according to customer specifications and product requirements.

Some of the layers and coatings that can be factory applied to flat woods are filler, sealer, groove coat, primer, stain, basecoat, ink, and topcoat. Solvents used in organic base flat wood coatings are usually component mixtures, including methyl ethyl ketone, methyl isobutyl ketone, toluene, xylene, butyl acetates, propanol, ethanol, butanol, naphtha, methanol, amyl acetate, mineral spirits, SoCal I and II, glycols, and glycol ethers. Those most often used in waterborne coatings are glycol, glycol ethers, propanol and butanol.

Various forms of roll coating are the preferred techniques for applying coatings to flat woods. Coatings used for surface cover can be applied with a direct roller coater, and reverse roll coaters are generally used to apply fillers, forcing the filler into panel cracks and voids. Precision coating and printing (usually with offset gravure grain printers) are also forms of roll coating, and several types of curtain coating may be employed, also (usually for topcoat application). Various spray techniques and brush coating may be used, too.

Printed interior panelings are produced from plywoods with hardwood surfaces (primarily lauan) and from various wood composition panels, including hardboard and particle board. Finishing techniques are used to cover the original surface and to produce various decorative effects. Figure 4.2.2.5-1 is a flow diagram showing some, but not all, typical production line variations for printed interior paneling.

Groove coatings, applied in different ways and at different points in the coating procedure, are usually pigmented low resin solids reduced with water before use, therefore yielding few, if any, emissions. Fillers, usually applied by reverse roll coating, may be of various formulations: (1) polyester (which is ultraviolet cured), (2) water base, (3) lacquer base, (4) polyurethane and (5) alkyd urea base. Water base fillers are in common use on printed paneling lines.

Sealers may be of water or solvent base, usually applied by airless spray or direct roll coating, respectively. Basecoats, which are usually direct roll coated, generally are of lacquer, synthetic, vinyl, modified alkyd urea, catalyzed vinyl, or water base.

Inks are applied by an offset gravure printing operation similar to direct roll coating. Most lauan printing inks are pigments dispersed in alkyd resin, with some nitrocellulose added for better wipe and printability. Water base

inks have a good future for clarity, cost and environmental reasons. After printing, a board goes through one or two direct or precision roll coaters for application of the clear protective topcoat. Some topcoats are synthetic, prepared from solvent soluble alkyd or polyester resins, urea formaldehyde cross linkings, resins, and solvents.

Natural hardwood plywood panels are coated with transparent or clear finishes to enhance and protect their face ply of hardwood veneer. Typical production lines are similar to those for printed interior paneling, except that a primer sealer is applied to the filled panel, usually by direct roll coating. The panel is then embossed and "valley printed" to give a "distressed" or antique appearance. No basecoat is required. A sealer is also applied after printing but before application of the topcoat, which may be curtain coated, although direct roll coating remains the usual technique.

Emissions and Controls[1-2] - Emissions of volatile organic compounds (VOC) at flat wood coating plants occur primarily from reverse roll coating of filler, direct roll coating of sealer and basecoat, printing of wood grain patterns, direct roll or curtain coating of topcoat(s), and oven drying after one or more of those operations (see Figure 4.2.2.5-1). All solvent used and not recovered can be considered potential emissions. Emissions can be calculated from the factors in Table 4.2.2.1-1, if the coating use is known. Emissions for interior printed panels can be estimated from the factors in Table 4.2.2.5-1, if the area of coated panels is known.

Waterborne coatings are increasingly used to reduce emissions. They can be applied to almost all flat wood except redwood and, possibly, cedar. The major use of waterborne flat wood coatings is in the filler and basecoat applied to printed interior paneling. Limited use has been made of waterborne materials for inks, groove coats, and topcoats with printed paneling, and for inks and groove coats with natural hardwood panels.

Ultraviolet curing systems are applicable to clear or semitransparent fillers, topcoats on particle board coating lines, and specialty coating operations. Polyester, acrylic, urethane and alkyd coatings can be cured by this method.

Afterburners can be used to control VOC emissions from baking ovens, and there would seem to be ample recovered heat to use. Extremely few flat wood coating operations have afterburners as addon controls, though, despite the fact that they are a viable control option for reducing emissions where product requirements restrict the use of other control techniques.

Carbon adsorption is technically feasible, especially for specific applications (e. g., redwood surface treatment), but the use of multicomponent solvents and different coating formulations in several steps along the coating line has thus far precluded its use to control flat wood coating emissions and to reclaim solvents. The use of low solvent coatings to fill pores and to seal wood has been demonstrated.

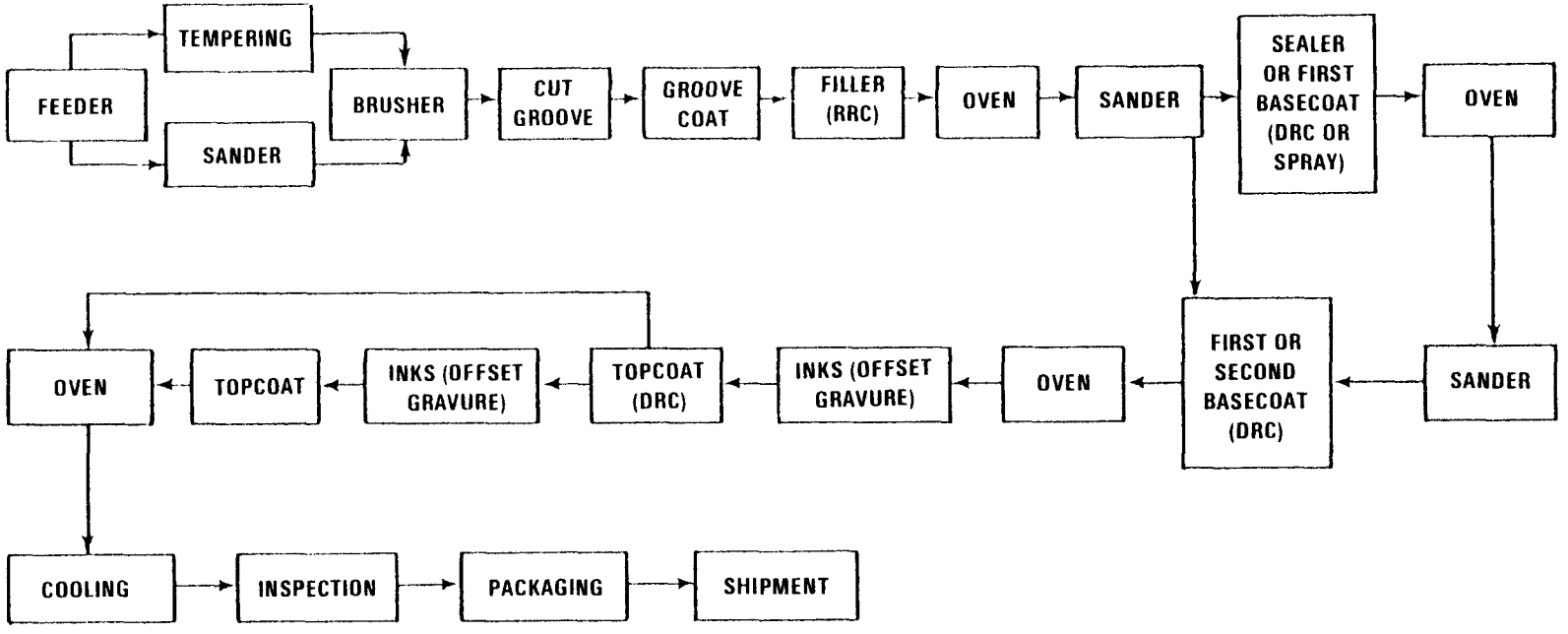

Figure 4.2.2.5-1. Flat Wood interior panel coating line emission points.[14]

RRC - REVERSE ROLL COATING
DRC - DIRECT ROLL COATING

TABLE 4.2.2.5-1. VOC EMISSION FACTORS FOR INTERIOR PRINTED PANELS[a]

EMISSION FACTOR RATING: B

Paint Category	Coverage[b]				Uncontrolled VOC Emissions					
	liter/100m^2		gal/1,000 ft^2		kg/100m^2 coated			lb/1,000 ft^2 coated		
	Water borne	Conventional	Water borne	Conventional	Water borne	Conventional	Ultraviolet[c]	Water borne	Conventional	Ultraviolet[c]
Filler	6.5	6.9	1.6	1.7	0.3	3.0	Neg	0.6	6.1	Neg
Sealer	1.4	1.2	0.35	0.3	0.2	0.5	0	0.4	1.1	0
Basecoat	2.6	3.2	3.2	0.65	0.8	0.2	0.24	0.5	5.0	0.5
Ink	0.4	0.4	0.1	0.1	0.1	0.3	0.10	0.2	0.6	0.2
Topcoat	2.6	2.8	0.65	0.7	0.4	1.8	Neg	0.8	3.7	Neg
TOTAL	13.5	14.5	3.4	3.6	1.2	8.0	0.4	2.5	16.5	0.8

[a]Reference 1. Organics are all nonmethane. Neg = negligible.
[b]Reference 3. From Abitibi Corp., Cucamonga, CA. Adjustments between water and conventional paints made using typical nonvolatiles content.
[c]UV line uses no sealer, uses waterborne basecoat and ink. Total adjusted to cover potential emissions from UV coatings.

References for Section 4.2.2.5

1. Control of Volatile Organic Emissions from Existing Stationary Sources, Volume VII: Factory Surface Coating of Flat Wood Interior Paneling, EPA-450/2-78-032, U. S. Environmental Protection Agency, Research Triangle Park, NC, June 1978.

2. Air Pollution Control Technology Applicable to 26 Sources of Volatile Organic Compounds, Office of Air Quality Planning and Standards, U. S. Environmental Protection Agency, Research Triangle Park, NC, May 27, 1977. Unpublished.

3. Products Finishing, 41(6A):4-54, March 1977.

4.2.2.6 PAPER COATING

Process Description[1-2] - Paper is coated for various decorative and functional purposes with waterborne, organic solventborne, or solvent free extruded materials. Paper coating is not to be confused with printing operations, which use contrast coatings that must show a difference in brightness from the paper to be visible. Coating operations are the application of a uniform layer or coating across a substrate. Printing results in an image or design on the substrate.

Waterborne coatings improve printability and gloss but cannot compete with organic solventborne coatings in resistance to weather, scuff and chemicals. Solventborne coatings, as an added advantage, permit a wide range of surface textures. Most solventborne coating is done by paper converting companies that buy paper from mills and apply coatings to produce a final product. Among the many products that are coated with solventborne materials are adhesive tapes and labels, decorated paper, book covers, zinc oxide coated office copier paper, carbon paper, typewriter ribbons, and photographic film.

Organic solvent formulations generally used are made up of film forming materials, plasticizers, pigments and solvents. The main classes of film formers used in paper coating are cellulose derivatives (usually nitrocellulose) and vinyl resins (usually the copolymer of vinyl chloride and vinyl acetate). Three common plasticizers are dioctyl phthalate, tricresyl phosphate and castor oil. The major solvents used are toluene, xylene, methyl ethyl ketone, isopropyl alcohol, methanol, acetone, and ethanol. Although a single solvent is frequently used, a mixture is often necessary to obtain the optimum drying rate, flexibility, toughness and abrasion resistance.

A variety of low solvent coatings, with negligible emissions, has been developed for some uses to form organic resin films equal to those of conventional solventborne coatings. They can be applied up to 1/8 inch thick (usually by reverse roller coating) to products like artificial leather goods, book covers and carbon paper. Smooth hot melt finishes can be applied over rough textured paper by heated gravure or roll coaters at temperatures from 65 to 230°C (150 to 450°F).

Plastic extrusion coating is a type of hot melt coating in which a molten thermoplastic sheet (usually low or medium density polyethylene) is extruded from a slotted die at temperatures of up to 315°C (600°F). The substrate and the molten plastic coat are united by pressure between a rubber roll and a chill roll which solidifies the plastic. Many products, such as the polyethylene coated milk carton, are coated with solvent free extrusion coatings.

Figure 4.2.2.6-1 shows a typical paper coating line that uses organic solventborne formulations. The application device is usually a reverse roller, a knife or a rotogravure printer. Knife coaters can apply solutions of much higher viscosity than roll coaters can, thus emitting less solvent per pound of solids applied. The gravure printer can print patterns or can coat a solid sheet of color on a paper web.

Ovens may be divided into from two to five temperature zones. The first zone is usally at about 43°C (110°F), and other zones have progressively higher temperatures to cure the coating after most solvent has evaporated. The typical curing temperature is 120°C (250°F), and ovens are generally limited to 200°C (400°F) to avoid damage to the paper. Natural gas is the fuel most often used in direct fired ovens, but fuel oil is sometimes used. Some of the heavier grades of fuel oil can create problems, because SO and particulate may contaminate the paper coating. Distillate fuel oil usually can be used satisfactorily. Steam produced from burning solvent retrieved from an adsorber or vented to an incinerator may also be used to heat curing ovens.

Emissions and Controls[2] - The main emission points from paper coating lines are the coating applicator and the oven (see Figure 4.2.2.6-1). In a typical paper coating plant, about 70 percent of all solvents used are emitted from the coating lines, with most coming from the first zone of the oven. The other 30 percent are emitted from solvent transfer, storage and mixing operations and can be reduced through good housekeeping practices. All solvent used and not recovered or destroyed can be considered potential emissions.

TABLE 4.2.2.6-1. CONTROL EFFICIENCIES FOR PAPER COATING LINES[a]

Affected facility	Control method	Efficiency (%)
Coating line	Incineration	95
	Carbon adsorption	90+
	Low solvent coating	80 - 99[b]

[a]Reference 2.
[b]Based on comparison with a conventional coating containing 35% solids and 65% organic solvent, by volume.

Volatile organic compounds (VOC) emissions from individual paper coating plants vary with size and number of coating lines, line construction, coating formulation, and substrate composition, so each must be evaluated individually. VOC emissions can be estimated from the factors in Table 4.2.2.1-1, if coating use is known and sufficient information on coating composition is available. Since many paper coating formulas are proprietary, it may be necessary to have information on the total solvent used and to assume that, unless a control device is used, essentially all solvent is emitted. Rarely would as much as 5 percent be retained in the product.

Almost all solvent emissions from the coating lines can be collected and sent to a control device. Thermal incinerators have been retrofitted to a large number of oven exhausts, with primary and even secondary heat recovery systems heating the ovens. Carbon adsorption is most easily adaptable to lines which use single solvent coating. If solvent mixtures are collected by adsorbers, they usually must be distilled for reuse.

Although available for some products, low solvent coatings are not yet available for all paper coating operations. The nature of the products, such

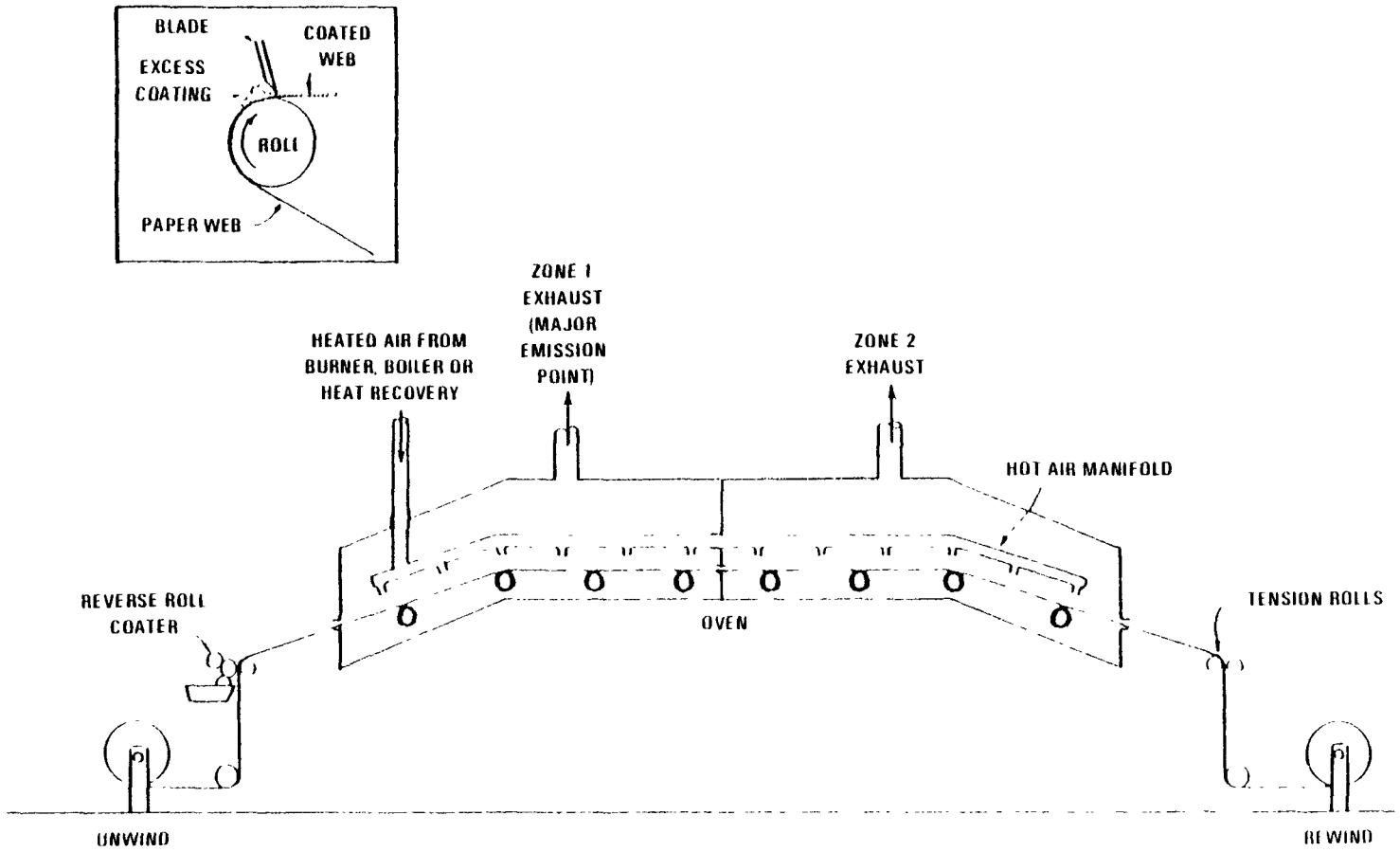

Figure 4.2.2.6-1 Paper coating line emission points [7]

as some types of photographic film, may preclude development of a low solvent option. Furthermore, the more complex the mixture of organic solvents in the coating, the more difficult and expensive to reclaim them for reuse with a carbon adsorption system.

References for Section 4.2.2.6

1. T. W. Hughes, et al., Source Assessment: Prioritization of Air Pollution from Industrial Surface Coating Operations, EPA-650/2-75-019a, U. S. Environmental Protection Agency, Research Triangle Park, NC, February 1975.

2. Control of Volatile Organic Emissions from Existing Stationary Sources, Volume II: Surface Coating of Cans, Coils, Paper Fabrics, Automobiles, and Light Duty Trucks, EPA-450/2-77-008, U. S. Environmental Protection Agency, Research Triangle Park, NC, May 1977.

4.2.2.7 FABRIC COATING[1-3]

Process Description - Fabric coating imparts to a fabric substrate properties such as strength, stability, water or acid repellence, or appearance. Fabric coating is the uniform application of an elastomeric or thermoplastic polymer solution, or a vinyl plastisol or organosol, across all of at least one side of a supporting fabric surface or substrate. Coatings are applied by blade, roll coater, reverse roll coater, and in some instances, by rotogravure coater. Fabric coating should not be confused with vinyl printing and top coating, which occur almost exclusively on rotogravure equipment. Textile printing also should not be considered a fabric coating process.

Products usually fabric coated are rainwear, tents, tarpaulins, substrates for industrial and electrical tape, tire cord, seals, and gaskets. The industry is mostly small to medium size plants, many of which are toll coaters, rather than specialists in their own product lines.

Figure 4.2.2.7-1 is of a typical fabric coating operation. If the fabric is to be coated with rubber, the rubber is milled with pigments, curing agents and fillers before being dissolved (mixed) in a suitable solvent. When other than rubber coatings are used, milling is rarely necessary.

Emissions and Controls[1] - The volatile organic compounds (VOC) emissions in a fabric coating plant originate at the mixer, the coating applicator and the oven (see Figure 4.2.2.7-1). Emissions from these three areas are from 10 to 25 percent, 20 to 30 percent and 40 to 65 percent, respectively. Fugitive losses, amounting to a few percent, escape during solvent transfer, storage tank breathing, agitation of mixing tanks, waste solvent disposal, various stages of cleanup, and evaporation from the coated fabric after it leaves the line.

The most accurate method of estimating VOC emissions from a fabric coating plant is to obtain purchase or use records of all solvents in a specified time period, add to that the amount of solvent contained in purchased coating solutions, and subtract any stockpiled solvent, such as cleanup solvent, that is recovered and disposed of in a nonpolluting manner. Emissions from the actual coating line, without any solvent recovery, can be estimated from the factors in Section 4.2.2.1, General Industrial Surface Coating, if coating use is known and sufficient information on coating composition is available. Because many fabric coatings are proprietary, it may be necessary for the user to supply information on the total solvent used and to assume that, unless a control device is used, all solvent is emitted. To calculate total plant emissions, the coatings mixing losses must be accounted. These losses can be estimated from the printline losses by using the relative split of plant emissions between the mixing area and the printline. For example,

$$\text{Emissions}_{\text{mixing}} = \text{Emissions}_{\text{printline}} \left(\frac{\text{10\% loss from mixing}}{\text{85\% loss from printline}}\right)$$

Incineration is probably the best way to control coating application and curing emissions on coating lines using a variety of coating formulations. Primary and secondary heat recovery are likely to be used to help reduce the fuel requirements of the coating process and, therefore, to increase the economy

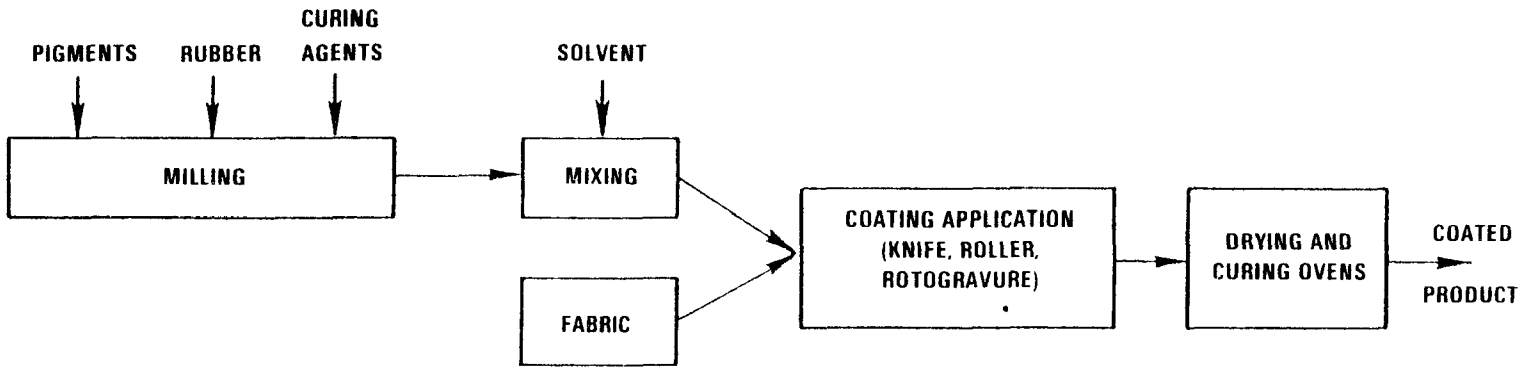

Figure 4.2.2.7-1. Fabric coating plant emission points [7]

of incineration. As with other surface coating operations, carbon adsorption is most easily accomplished by sources using a single solvent that can be recovered for reuse. Mixed solvent recovery is, however, in use in other web coating processes. Fugitive emissions controls include tight covers for open tanks, collection hoods for cleanup areas, and closed containers for storage of solvent wiping cloths. Where high solids or waterborne coatings have been developed to replace conventional coatings, their use may preclude the need for a control device.

References for Section 4.2.2.7

1. Control of Volatile Organic Emissions from Existing Stationary Sources, Volume II: Surface Coating of Cans, Coils, Paper Fabrics, Automobiles, and Light Duty Trucks, EPA-450/2-77-008, U. S. Environmental Protection Agency, Research Triangle Park, NC, May 1977.

2. B. H. Carpenter and G. K. Hilliard, Environmental Aspects of Chemical Use in Printing Operations, EPA-560/1-75-005, U. S. Environmental Protection Agency, Washington, DC, January 1976.

3. J. C. Berry, "Fabric Printing Definition", Memorandum, Office of Air Quality Planning and Standards, U. S. Environmental Protection Agency, Research Triangle Park, NC, August 25, 1980.

not more than 1000°F (480 - 540°C) to prevent warping of the drum. Emissions are vented to an afterburner or secondary combustion chamber, where the gases are raised to at least 1500°F (760°C) for a minimum of 0.5 seconds. The average amount of material removed from each drum is 4.4 lb (2 kg).

Table 4.8-2. EMISSION FACTORS FOR TANK TRUCK CLEANING[a]

EMISSION FACTOR RATING: D

Compound	Chemical Class		Total emissions	
	Vapor pressure	Viscosity	lb/truck	g/truck
Acetone	high	low	0.686	311
Perchloroethylene	high	low	0.474	215
Methyl methacrylate	medium	medium	0.071	32.4
Phenol	low	low	0.012	5.5
Propylene glycol	low	high	0.002	1.07

[a]Reference 1. One hour test duration.

4.8.2 Emissions and Controls

4.8.2.1 Rail Tank Cars and Tank Trucks - Atmospheric emissions from tank car and truck cleaning are predominantly volatile organic chemical vapors. To achieve a practical but representative picture of these emissions, the organic chemicals hauled by the carriers must be broken down into classes of high, medium and low viscosities and high, medium and low vapor pressures. This is because high viscosity materials do not drain readily, affecting the quantity of material remaining in the tank, and high vapor pressure materials volatilize more readily during cleaning and tend to lead to greater emissions.

Practical and economically feasible controls of atmospheric emissions from tank car and truck cleaning do not exist, except for containers transporting commodities that produce combustible gases and water soluble vapors (such as ammonia and chlorine). Gases which are displaced as tanks are filled are sent to a flare and burned. Water soluble vapors are absorbed in water and sent to the wastewater system. Any other emissions are vented to the atmosphere.

Tables 4.8-1 and 4.8-2 give emission factors for representative organic chemicals hauled by tank cars and trucks.

4.8.2.2 Drums - There is no control for emissions from steaming of drums. Solution or caustic washing yields negligible air emissions, because the drum is closed during the wash cycle. Atmospheric emissions from steaming or washing drums are predominantly organic chemical vapors.

Air emissions from drum burning furnaces are controlled by proper operation of the afterburner or secondary combustion chamber, where gases are raised to at least 1400°F (760°C) for a minimum of 0.5 seconds. This normally ensures complete combustion of organic materials and prevents the formation, and subsequent release, of large quantities of NO_x, CO and particulates. In open burning, however, there is no feasible way of controlling the release of incomplete combustion products to the atmosphere. Conversion of open cleaning operations to closed cycle cleaning and elimination of open air drum burning seem to be the only control alternatives immediately available.

Table 4.8-3 gives emission factors for representative criteria pollutants emitted from drum burning and cleaning.

TABLE 4.8-3. EMISSION FACTORS FOR DRUM BURNING[a]

EMISSION FACTOR RATING: E

Pollutant	Total Emissions			
	Controlled		Uncontrolled	
	lb/drum	g/drum	lb/drum	g/drum
Particulate	0.02646	12[b]	0.035	16
NO_x	0.00004	0.018	0.002	0.89
VOC	negligible		negligible	

[a]Reference 1. Emission factors are in terms of weight of pollutant released per drum burned, except for VOC, which are per drum washed.
[b]Reference 1, Table 17 and Appendix A.

Reference for Section 4.8

1. T. R. Blackwood, et al., Source Assessment: Rail Tank Car, Tank Truck, and Drum Cleaning, State of the Art, EPA-600/2-78-004g, U. S. Environmental Protection Agency, Research Triangle Park, NC, April 1978.

TABLE 6.6-1. EMISSION FACTORS FOR FISH PROCESSING PLANTS

EMISSION FACTOR RATING: C

Emission source	Particulates		Trimethylamine [$(CH_3)_3N$]		Hydrogen sulfide [H_2S]	
	kg/Mg	lb/ton	kg/Mg	lb/ton	kg/Mg	lb/ton
Cookers, canning	Neg[a]	Neg[a]	NA[b]	NA[b]	NA[b]	NA[b]
Cookers, fish scrap						
Fresh fish	Neg[a]	Neg[a]	0.15[c]	0.3[c]	0.005[c]	0.01[c]
Stale fish	Neg[a]	Neg[a]	1.75[c]	3.5[c]	0.10[c]	0.2[c]
Steam tube dryers	2.5	5[d]	NA[d]	NA[d]	NA[d]	NA[d]
Direct fired dryers	4[d]	8[d]	NA[d]	NA[d]	NA[d]	NA[d]

[a]Reference 1. Factors are for uncontrolled emissions, before cyclone. Neg = negligible. NA = not available.
[b]Although it is known that odors are emitted from canning cookers, quantitative estimates are not available.
[c]Reference 2.
[d]Reference 1.

References for Section 6.6

1. Air Pollution Engineering Manual, Second Edition, AP-40, U. S. Environmental Protection Agency, Research Triangle Park, NC, May 1973. Out of Print.

2. W. Summer, Methods of Air Deodorization, New York, Elsevier Publishing Company, 1963.

6.8 AMMONIUM NITRATE

6.8.1 General[1-2]

Ammonium nitrate (NH_4NO_3) is produced by neutralizing nitric acid with ammonia. The reaction can be carried out at atmospheric pressure or at pressures up to 410 kPa (45 psig) and at temperatures between 405 and 458K (270 - 365°F). An 83 weight percent solution of ammonium nitrate product is produced when concentrated nitric acid (56 - 60 weight percent) is combined with gaseous ammonia in a ratio of from 3.55 to 3.71 to 1, by weight. When solidified, ammonium nitrate is a hygroscopic colorless solid.

Ammonium nitrate is marketed in several forms, depending upon its use. The solution formed from the neutralization of acid and ammonia may be sold as a fertilizer, generally in combination with urea. The solution may be further concentrated to form a 95 to 99.5 percent ammonium nitrate melt for use in solids formation processes. Solid ammonium nitrate may be produced by prilling, graining, granulation or crystallization. In addition, prills can be produced in either high or low density form, depending on the concentration of the melt. High density prills, granules and crystals are used as fertilizer. Ammonium nitrate grains are used solely in explosives. Low density prills can be used as either.

The process for manufacturing ammonium nitrate can contain up to seven major unit operations. These operating steps, shown in Figure 6.8-1, are solution formation or synthesis, solution concentration, solids formation, solids finishing, solids screening, solids coating, and bagging and/or bulk shipping. In some cases, solutions may be blended for marketing as liquid fertilizers.

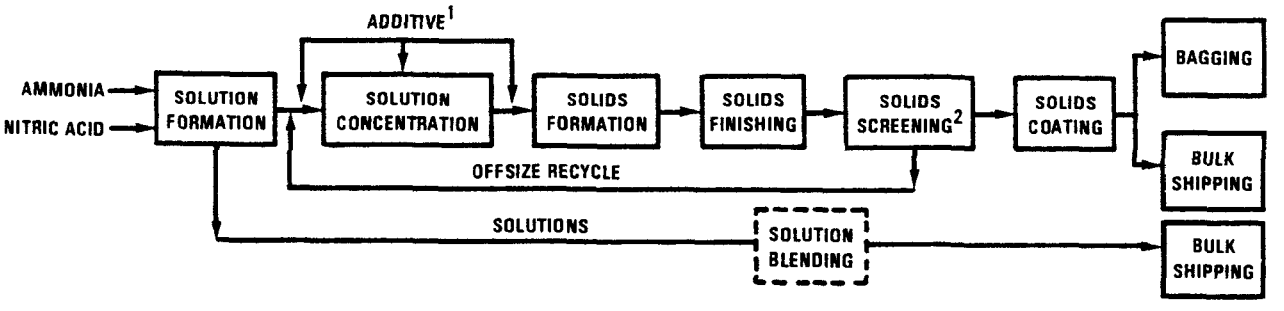

[1]ADDITIVE MAY BE ADDED BEFORE, DURING, OR AFTER CONCENTRATION
[2]SCREENING MAY BE BEFORE OR AFTER SOLIDS FINISHING

Figure 6.8-1. Ammonium nitrate manufacturing operations.

The number of operating steps employed is determined by the desired end product. For example, plants producing ammonium nitrate solutions alone use only the solution formation, solution blending and bulk shipping

operations. Plants producing a solid ammonium nitrate product can employ all of the operations.

All ammonium nitrate plants produce an aqueous ammonium nitrate solution through the reaction of ammonia and nitric acid in a neutralizer. To produce a solid product, the ammonium nitrate solution is concentrated in an evaporator or concentrator heated to drive off water. A melt is produced containing from 95 to 99.8 percent ammonium nitrate at approximately 422K (300°F). This melt is then used to make solid ammonium nitrate products.

Of the various processes used to produce solid ammonium nitrate, prilling and granulation are the most common. To produce prills, concentrated melt is sprayed into the top of a prill tower. Ammonium nitrate droplets form in the tower and fall countercurrent to a rising air stream that cools and solidifies the falling droplets into spherical prills. Prill density can be varied by using different concentrations of ammonium nitrate melt. Low density prills are formed from a 95 to 97.5 percent ammonium nitrate melt, and high density prills are formed from a 99.5 to 99.8 percent melt. High density prills are less porous than low density prills.

In the prilling process, an additive may be injected into the melt stream. This additive serves three purposes, to raise the crystalline transition temperature of the solid final product; to act as a desiccant, drawing water into the final product prills to reduce caking; and to allow prilling to be conducted at a lower temperature by reducing the freezing point of molten ammonium nitrate. Magnesium nitrate or magnesium oxide are examples of additives to the melt stream. Such additives account for 1 to 2.5 weight percent of the final product. While these additives are effective replacements for conventional coating materials, their use is not widespread in the industry.

Rotary drum granulators produce granules by spraying a concentrated ammonium nitrate melt (99.0 to 99.8 percent) onto small seed particles in a long rotating cylindrical drum. As the seed particles rotate in the drum, successive layers of ammonium nitrate are added to the particles, forming granules. Granules are removed from the granulator and screened. Offsize granules are crushed and recycled to the granulator to supply additional seed particles or are dissolved and returned to the solution process. Pan granulators operate on the same principle as drum granulators and produce a solid product with physical characteristics similar to those of drum granules, except the solids are formed in a large, rotating circular pan.

The temperature of the ammonium nitrate product exiting the solids formation process is approximately 339 - 397K (150 - 255°F). Rotary drum or fluidized bed cooling prevents deterioration and agglomeration of solids before storage and shipping. Low density prills, which have a high moisture content because of a lower melt concentration, require drying before cooling, usually in rotary drums or fluidized beds.

Since the solids are produced in a wide variety of sizes, they must be screened for consistently sized prills or granules. Cooled prills are screened, and offsize prills are dissolved and recycled to the solution concentration process. Granules are screened before cooling, undersize

particles are returned directly to the granulator, and oversize granules may be either crushed and returned to the granulator or sent to the solution concentration process.

Following screening, products can be coated in a rotary drum to prevent agglomeration during storage and shipment. The most common coating materials are clays and diatomaceous earth. However, the use of additives in the ammonium nitrate melt before prilling may preclude the use of coatings.

Solid ammonium nitrate is stored and shipped in either bulk or bags. Approximately 10 percent of solid ammonium nitrate produced in the United States is bagged.

6.8.2 Emissions and Controls

Emissions from ammonium nitrate production plants are particulate matter (ammonium nitrate and coating materials), ammonia and nitric acid. Ammonia and nitric acid are emitted primarily from solution formation and concentration processes, with ammonia also being emitted from prill towers and granulators. Particulate matter (largely as ammonium nitrate) is emitted from most of the process operations and is the primary emission addressed here.

The emission sources in solution formation and concentration processes are neutralizers and evaporators, primarily emitting nitric acid and ammonia. Specific plant operating characteristics, however, make these emissions vary depending upon use of excess ammonia or acid in the neutralizer. Since the neutralization operation can dictate the quantity of these emissions, a range of emission factors is presented in Table 6.8-1. Particulate emissions from these operations tend to be smaller in size than those from solids production and handling processes and generally are recycled back to the process.

Emissions from solids formation processes are ammonium nitrate particulate matter and ammonia. The sources of primary importance are prill towers (for high density and low density prills) and granulators (rotary drum and pan). Emissions from prill towers result from carryover of fine particles and fume by the prill cooling air flowing through the tower. These fine particles are from microprill formation, attrition of prills colliding with the tower or one another, and from rapid transition of the ammonium nitrate between crystal states. The uncontrolled particulate emissions from prill towers, therefore, are affected by tower airflow, spray melt temperature, condition and type of melt spray device, air temperature, and crystal state changes of the solid prills. The amount of microprill mass that can be entrained in the prill tower exhaust is determined by the tower air velocity. Increasing spray melt temperature causes an increase in the amount of gas phase ammonium nitrate generated. Thus, gaseous emissions from high density prilling are greater than from low density towers. Microprill formation resulting from partially plugged orifices of melt spray devices can increase fine dust loading and emissions. Certain designs (spinning buckets) and practices (vibration of spray plates) help reduce microprill formation. High ambient air temperatures can cause increased emissions because of entrainment as a

TABLE 6.8-1. EMISSION FACTORS FOR PROCESSES IN AMMONIUM NITRATE MANUFACTURING PLANTS[a]
kg/Mg (lb/ton)

Process	Particulate Matter		Ammonia		Nitric Acid	Emission Factor Rating
	Uncontrolled	Controlled[b]	Uncontrolled[c]			
Neutralizer	0.045 - 4.3 (0.09 - 8.6)	0.002 - 0.22 (0.004 - 0.43)	0.43 - 18.0	(0.86 - 36.0)	0.042 - 1[d] (0.084 - 2)[d]	B
Evaporation/concentration Operations	0.26 (0.52)	-	0.27 - 16.7	(0.54 - 33.4)	-	A
Solids Formation Operations						A
High density prill towers	1.59 (3.18)	0.60 (1.20)	28.6	(57.2)	-	
Low density prill towers	0.46 (0.92)	0.26 (0.52)	0.13	(0.26)	-	
Rotary drum granulators	146 (292)	0.22 (0.44)	29.7	(59.4)	-	
Pan granulators	1.34 (2.68)	0.02 (0.04)	0.07	(0.14)	-	
Coolers and Dryers						A
High density prill coolers[e]	0.8 (1.6)	0.01 (0.02)	0.02	(0.04)	-	
Low density prill coolers[e]	25.8 (51.6)	0.26 (0.52)	0.15	(0.30)	-	
Low density prill dryers[e]	57.2 (114.4)	0.57 (1.14)	0 - 1.59	(0 - 3.18)	-	
Rotary drum granulator coolers[e]	8.1 (16.2)	0.08 (0.16)	0.59	(1.188)	-	
Pan granulator coolers[e]	18.3 (36.6)	0.18 (0.36)	0	(0)	-	
Coating Operations[f]	≤2.0 (≤4.0)	≤0.02 (≤0.04)	-		-	B
Bulk Loading Operations[f]	≤0.01 (≤0.02)	-	-		-	B

[a]Factors are g/kg (kg/Mg) and lb/ton of ammonium nitrate fertilizer produced. Some ammonium nitrate emission factors are based on data gathered using a modification to EPA Method 5 (See Reference 1). Dash = no data.

[b]Based on the following control efficiencies for wet scrubbers, applied to uncontrolled emissions: neutralizers, 95%; high density prill towers, 62%; low density prill towers, 43%; rotary drum granulators, 99.9%; pan granulators, 98.5%; coolers, dryers and coaters, 99%.

[c]Given as ranges because of variation in data and plant operations. Factors for controlled emissions not presented due to conflicting results on control efficiency.

[d]Based on 95% recovery in a granulator recycle scrubber.

[e]Factors for coolers represent combined precooler and cooler emissions, and factors for dryers represent combined predryer and dryer emissions.

[f]Fugitive particulate emissions arise from coating and bulk loading operations.

result of the higher air flow required to cool prills and because of increased fume formation at the higher temperatures.

The granulation process in general provides a larger degree of control in product formation than does prilling. Granulation produces a solid ammonium nitrate product that, relative to prills, is larger and has greater abrasion resistance and crushing strength. The air flow in granulation processes is lower than that in prilling operations. Granulators, however, cannot produce low density ammonium nitrate economically with current technology. The design and operating parameters of granulators may affect emission rates. For example, the recycle rate of seed ammonium nitrate particles affects the bed temperature in the granulator. An increase in bed temperature resulting from decreased recycle of seed particles may cause an increase in dust emissions from granule disintegration.

Cooling and drying are usually conducted in rotary drums. As with granulators, the design and operating parameters of the rotary drums may affect the quantity of emissions. In addition to design parameters, prill and granule temperature control is necessary to control emissions from disintegration of solids caused by changes in crystal state.

Emissions from screening operations are generated by the attrition of the ammonium nitrate solids against the screens and against one another. Almost all screening operations used in the ammonium nitrate manufacturing industry are enclosed or have a cover over the uppermost screen. Screening equipment is located inside a building, and emissions are ducted from the process for recovery or reuse.

Prills and granules are typically coated in a rotary drum. The rotating action produces a uniformly coated product. The mixing action also causes some of the coating material to be suspended, creating particulate emissions. Rotary drums used to coat solid product are typically kept at a slight negative pressure, and emissions are vented to a particulate control device. Any dust captured is usually recycled to the coating storage bins.

Bagging and bulk loading operations are a source of particulate emissions. Dust is emitted from each type of bagging process during final filling when dust laden air is displaced from the bag by the ammonium nitrate. The potential for emissions during bagging is greater for coated than for uncoated material. It is expected that emissions from bagging operations are primarily the kaolin, talc or diatomaceous earth coating matter. About 90 percent of solid ammonium nitrate produced domestically is bulk loaded. While particulate emissions from bulk loading are not generally controlled, visible emissions are within typical state regulatory requirements (below 20 percent opacity).

Table 6.8-1 summarizes emission factors for various processes involved in the manufacture of ammonium nitrate. Uncontrolled emissions of particulate matter, ammonia and nitric acid are given in the Table. Emissions of ammonia and nitric acid depend upon specific operating practices, so ranges of factors are given for some emission sources.

Emission factors for controlled particulate emissions are also in Table 6.8-1, reflecting wet scrubbing particulate control techniques. The particle size distribution data presented in Table 6.8-2 indicate the applicability of wet scrubbing to control ammonium nitrate particulate emissions. In addition, wet scrubbing is used as a control technique because the solution containing the recovered ammonium nitrate can be sent to the solution concentration process for reuse in production of ammonium nitrate, rather than to waste disposal facilities.

TABLE 6.8-2. PARTICLE SIZE DISTRIBUTION DATA FOR UNCONTROLLED EMISSIONS FROM AMMONIUM NITRATE MANUFACTURING FACILITIES[a]

	CUMULATIVE WEIGHT %		
	≤ 2.5 μm	≤ 5 μm	≤ 10 μm
Solids Formation Operations			
Low density prill tower	56	73	83
Rotary drum granulator	0.07	0.3	2
Coolers and Dryers			
Low density prill cooler	0.03	0.09	0.4
Low density prill predryer	0.03	0.06	0.2
Low density prill dryer	0.04	0.04	0.15
Rotary drum granulator cooler	0.06	0.5	3
Pan granulator precooler	0.3	0.3	1.5

[a]References 4, 11-12, 22-23. Particle size determinations were not done in strict accordance with EPA Method 5. A modification was used to handle the high concentrations of soluble nitrogenous compounds (See Reference 1). Particle size distributions were not determined for controlled particulate emissions.

References for Section 6.8

1. Ammonium Nitrate Manufacturing Industry - Technical Document, EPA-450/3-81-002, U. S. Environmental Protection Agency, Research Triangle Park, NC, January 1981.

2. W. J. Search and R. B. Reznik, Source Assessment: Ammonium Nitrate Production, EPA-600/2-77-107i, U. S. Environmental Protection Agency, Research Triangle Park, NC, September 1977.

3. Memo from C. D. Anderson, Radian Corporation, Durham, NC, to Ammonium Nitrate file, July 2, 1980.

4. D. P. Becvar, et al., Ammonium Nitrate Emission Test Report: Union Oil Company of California, EMB-78-NHF-7, U. S. Environmental Protection Agency, Research Triangle Park, NC, October 1979.

5. K. P. Brockman, Emission Tests for Particulates, Cominco American, Beatrice, NE, 1974.

6. Written communication from S. V. Capone, GCA Corporation, Chapel Hill, NC, to E. A. Noble, U. S. Environmental Protection Agency, Research Triangle Park, NC, September 6, 1979.

7. Written communication from D. E. Cayard, Monsanto Agricultural Products Company, St. Louis, MO, to E. A. Noble, U. S. Environmental Protection Agency, Research Triangle Park, NC, December 4, 1978.

8. Written communication from D. E. Cayard, Monsanto Agricultural Products Company, St. Louis, MO, to E. A. Noble, U. S. Environmental Protection Agency, Research Triangle Park, NC, December 27, 1978.

9. Written communication from T. H. Davenport, Hercules Incorporated, Donora, PA, to D. R. Goodwin, U. S. Environmental Protection Agency, Research Triangle Park, NC, November 16, 1978.

10. R. N. Doster and D. J. Grove, Source Sampling Report: Atlas Powder Company, Entropy Environmentalists, Inc., Research Triangle Park, NC, August 1976.

11. M. D. Hansen, et al., Ammonium Nitrate Emission Test Report: Swift Chemical Company, EMB-79-NHF-11, U. S. Environmental Protection Agency, Research Triangle Park, NC, July 1980.

12. R. A. Kniskern, et al., Ammonium Nitrate Emission Test Report: Cominco American, Inc., Beatrice, Nebraska, EMB-79-NHF-9, U. S. Environmental Protection Agency, Research Triangle Park, NC, April 1979.

13. Written communication from J. A. Lawrence, C. F. Industries, Long Grove, IL, to D. R. Goodwin, U. S. Environmental Protection Agency, Research Triangle Park, NC, December 15, 1978.

14. Written communication from F. D. McCauley, Hercules Incorporated, Louisiana, MO, to D. R. Goodwin, U. S. Environmental Protection Agency, Research Triangle Park, October 31, 1978.

15. W. E. Misa, Report of Source Test: Collier Carbon and Chemical Corporation (Union Oil), Test No. 5Z-78-3, Anaheim, CA, January 12, 1978.

16. Written communication from L. Musgrove, Georgia Department of Natural Resources, Atlanta, GA, to R. Rader, Radian Corporation, Durham, NC, May 21, 1980.

17. Written communication from D. J. Patterson, N-ReN Corporation, Cincinnati, OH, to E. A. Noble, U. S. Environmental Protection Agency, Research Triangle Park, NC, March 26, 1979.

18. Written communication from H. Schuyten, Chevron Chemical Company, San Francisco, CA, to D. R. Goodwin, U. S. Environmental Protection Agency, March 2, 1979.

19. Emission Test Report: Phillips Chemical Company, Texas Air Control Board, Austin, TX, 1975.

20. Surveillance Report: Hawkeye Chemical Company, U. S. Environmental Protection Agency, Research Triangle Park, NC, December 29, 1976.

21. W. A. Wade and R. W. Cass, Ammonium Nitrate Emission Test Report: C. F. Industries, EMB-79-NHF-10, U. S. Environmental Protection Agency, Research Triangle Park, NC, November 1979.

22. W. A. Wade, et al., Ammonium Nitrate Emission Test Report: Columbia Nitrogen Corporation, EMB-80-NHF-16, U. S. Environmental Protection Agency, Research Triangle Park, NC, January 1981.

23. York Research Corporation, Ammonium Nitrate Emission Test Report: N-ReN Corporation, EMB-78-NHF-5, U. S. Environmental Protection Agency, Research Triangle Park, NC, May 1979.

6.14 UREA

6.14.1 General[1]

Urea ($CO[NH_2]_2$), also known as carbamide or carbonyl diamide, is produced by reacting ammonia and carbon dioxide at 448 - 473K (347 - 392°F) and 13.7 - 23.2 MPa (2,000[2] - 3,400 psi) to form ammonium carbamate ($NH_2CO_2NH_4$). Pressure may be as high as 41.0 MPa (6,000 psi).[3] Urea is formed by a dehydration decomposition of ammonium carbamate.

Urea is marketed as a solution or in a variety of solid forms. Most urea solution produced is used in fertilizer mixtures, with a small amount going to animal feed supplements. Most solids are produced as prills or granules, for use as fertilizer or protein supplement in animal feeds, and use in plastics manufacturing. Five U. S. plants produce solid urea in crystalline form.

The process for manufacturing urea involves a combination of up to seven major unit operations. These operations, illustrated by the flow diagram in Figure 6.14-1, are solution synthesis, solution concentration, solids formation, solids cooling, solids screening, solids coating, and bagging and/or bulk shipping.

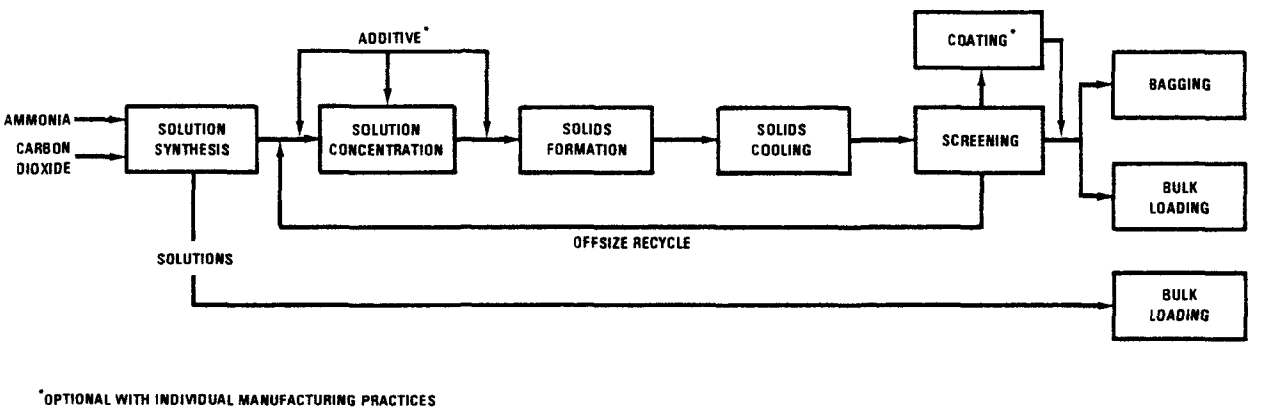

Figure 6.14-1. Major urea manufacturing operations.

The combination of processing steps is determined by the desired end products. For example, plants producing urea solution use only the solution formulation and bulk shipping operations. Facilities producing solid urea employ these two operations and various combinations of the remaining five operations, depending upon the specific end product being produced.

In the solution synthesis operation, ammonia and CO_2 are reacted to form ammonium carbamate. The carbamate is then dehydrated to yield 70 to 77 percent aqueous urea solution. This solution can be used as an

ingredient of nitrogen solution fertilizers, or it can be concentrated further to produce solid urea.

The concentration process furnishes urea melt for solids formation. The three methods of concentrating the urea solution are vacuum concentration, crystallization and atmospheric evaporation. The method chosen depends upon the level of biuret ($NH_2CONHCONH_2$) impurity allowable in the end product. The most common method of solution concentration is evaporation.

Urea solids are produced from the urea melt by two basic methods, prilling and granulation. Prilling is a process by which solid particles are produced from molten urea. Molten urea is sprayed from the top of a prill tower, and as the droplets fall through a countercurrent air flow, they cool and solidify into nearly spherical particles. There are two types of prill towers, fluidized bed and nonfluidized bed. The major difference between these towers is that a separate solids cooling operation may be required to produce agricultural grade prills in a nonfluidized bed prill tower.[4]

Granulation is more popular than prilling in producing solid urea for fertilizer. There are two granulation methods, drum granulation and pan granulation. In drum granulation, solids are built up in layers on seed granules in a rotating drum granulator/cooler approximately 14 feet in diameter. Pan granulators also form the product in a layering process, but different equipment is used, and pan granulators are not common in this country.

The solids cooling operation generally is accomplished during solids formation, but for pan granulation processes and for some agricultural grade prills, some supplementary cooling is provided by auxiliary rotary drums.

The solids screening operation removes offsize product from solid urea. The offsize material may be returned to the process in the solid phase or be redissolved in water and returned to the solution concentration process.

Clay coatings are used in the urea industry to reduce product caking and urea dust formation, even though they also reduce the nitrogen content of the product, and the coating operation creates clay dust emissions. The popularity of clay coating has diminished considerably because of the practice of injecting formaldehyde additives into the liquid or molten urea before solids formation.[5-6] Additives reduce solids caking during storage and urea dust formation during transport and handling.

The majority of solid urea product is bulk shipped in trucks, enclosed railroad cars, or barges, but approximately 10 percent is bagged.

6.14.2 Emissions and Controls

Emissions from urea manufacture include ammonia and particulate matter. Ammonia is emitted during the solution synthesis and solids production processes. Particulate matter is the primary emission being addressed here. There have been no reliable measurements of free gaseous formaldehyde emissions. The chromotropic acid procedure that has been used to measure

formaldehyde is not capable of distinguishing between gaseous formaldehyde and methylenediurea, the principle compound formed when the formaldehyde additive reacts with hot urea.[7-8]

In the synthesis process, some emission control is inherent in the recycle process where carbamate gases and/or liquids are recovered and recycled. Typical emission sources from the solution synthesis process are noncondensable vent streams from ammonium carbamate decomposers and separators. Emissions from synthesis processes are generally combined with emissions from the solution concentration process and are vented through a common stack. Combined particulate emissions from urea synthesis and concentration are much less than particulate emissions from a typical solids producing urea plant. The synthesis and concentration operations are usually uncontrolled except for recycle provisions to recover ammonia. For these reasons, no factor for controlled emissions from synthesis and concentration processes is given in this section.

Uncontrolled emission rates from prill towers may be affected by the following factors:

- product grade being produced
- air flow rate through the tower
- type of tower bed
- ambient temperature and humidity

The total of mass emissions per unit is usually lower for feed grade prill production than for agricultural grade prills, due to lower airflows.[5] Uncontrolled particulate emission rates for fluidized bed prill towers are higher than those for nonfluidized bed prill towers making agricultural grade prills and are approximately equal to those for nonfluidized bed feed grade prills.[4] Ambient air conditions can affect prill tower emissions. Available data indicate that colder temperatures promote the formation of smaller particles in the prill tower exhaust.[9] Since smaller particles are more difficult to remove, the efficiency of prill tower control devices tends to decrease with ambient temperatures. This can lead to higher emission levels for prill towers operated during cold weather. Ambient humidity can also affect prill tower emissions. Air flow rates must be increased with high humidity, and higher air flow rates usually cause higher emissions.

The design parameters of drum granulators and rotary drum coolers may affect emissions.[10-11]

Drum granulators have an advantage over prill towers in that they are capable of producing very large particles without difficulty. Granulators also require less air for operation than do prill towers. A disadvantage of granulators is their inability to produce the smaller feed grade granules economically. To produce smaller granules, the drum must be operated at a higher seed particle recycle rate. It has been reported that, although the increase in seed material results in a lower bed temperature, the corresponding increase in fines in the granulator causes a higher emission rate.[10] Cooling air passing through the drum granulator entrains approximately 10 to 20 percent of the product.[8] This air stream is

controlled with a wet scrubber which is standard process equipment on drum granulators.

In the solids screening process, dust is generated by abrasion of urea particles and the vibration of the screening mechanisms. Therefore, almost all screening operations used in the urea manufacturing industry are enclosed or are covered over the uppermost screen. This operation is a small emission source, and particulate emissions from solids screening are not treated here.[12-13]

Emissions attributable to coating include entrained clay dust from loading, inplant transfer, and leaks from the seals of the coater. No emissions data are available to quantify this fugitive dust source.

Bagging operations are a source of particulate emissions. Dust is emitted from each bagging method during the final stages of filling, when dustladen air is displaced from the bag by urea. Bagging operations are conducted inside warehouses and are usually vented to keep dust out of the workroom area, according to OSHA regulations. Most vents are controlled with baghouses. Nationwide, approximately 90 percent of urea produced is bulk loaded. Few plants control their bulk loading operations. Generation of visible fugitive particles is slight.

Table 6.14-1 summarizes the uncontrolled and controlled emission factors, by processes, for urea manufacture. Table 6.14-2 summarizes particle sizes for these emissions.

TABLE 6.14-2. UNCONTROLLED PARTICLE SIZE DATA FOR UREA PRODUCTION[a]

OPERATION	PARTICLE SIZE (Cummulative Weight %) ≤ 10 μm	≤ 5 μm	≤ 2.5 μm
Solution Formation and Concentration	NA	NA	NA
Solids Formation			
Nonfluidized bed prilling			
agricultural grade	90	84	79
feed grade	85	74	50
Fluidized bed prilling			
agricultural grade	60	52	43
feed grade	24	18	14
Drum granulation	b	b	b
Rotary Drum Cooler	0.70	0.15	0.04
Bagging	NA	NA	NA
Bulk Loading	NA	NA	NA

[a]NA = not available. No data were available on particle sizes of controlled emissions. Particle size information was collected uncontrolled in the ducts and may not reflect particle size in the ambient air.

[b]All particulate matter ≥ 5.7 μm was collected in the cyclone precollector sampling equipment.

TABLE 6.14-1. EMISSION FACTORS FOR UREA PRODUCTION[a]
EMISSION FACTOR RATING: A[b]

Operation	Particulates[c]				Ammonia			
	Uncontrolled		Controlled		Uncontrolled		Exiting Control Device	
	kg/Mg	lb/ton	kg/Mg	lb/ton	kg/Mg	lb/ton	kg/Mg	lb/ton
Solution formation and concentration[d]	0.0105[e]	0.021[e]	-	-	9.12[f]	18.24[f]	-	-
Solids formation								
Nonfluidized bed prilling								
agricultural grade[g]	1.9[h]	3.8[h]	0.032	0.064	0.43	0.87	i	i
feed grade[j]	1.8	3.6	NA	NA	NA	NA	NA	NA
Fluidized bed prilling								
agricultural grade[j]	3.1	6.2	0.39	0.78	1.46	2.91	i	i
feed grade[j]	1.8	3.6	0.24	0.48	2.07	4.14	1.04	2.08
Drum granulation[k]	120	241	0.115	0.234	1.07[l]	2.15[l]	h	h
Rotary drum cooler	3.72	7.45	0.10[m]	0.20[m]	0.0256	0.051	NA	NA
Bagging	0.095[n]	0.19[n]	NA	NA	NA	NA	NA	NA

[a]Based on emissions per unit of production output. Dash = not applicable. NA = not available.

[b]Emission Factor Rating is C for controlled particulate emissions from rotary drum coolers and uncontrolled particulate emissions from bagging.

[c]Particulate test data were collected using a modification of EPA Reference Method 5. Reference 1, Appendix B explains these modifications.

[d]References 14 - 16, 19. Emissions from the synthesis process are generally combined with emissions from the solution concentration process and vented through a common stack. In the synthesis process, some emission control is inherent in the recycle process where carbamate gases and/or liquids are recovered and recycled.

[e]EPA test data indicated a range of 0.0052 - 0.0150 kg/Mg (0.0104 - 0.0317 lb/ton).

[f]EPA test data indicated a range of 3.79 - 14.44 kg/Mg (7.58 - 28.89 lb/ton).

[g]Reference 20. These factors were determined at an ambient temperature of 288K - 294K (57°F - 69°F). The controlled emission factors are based on ducting exhaust through a downcomer and then a wetted fiber filter scrubber achieving a 98.3 percent efficiency. This represents a higher degree of control than is typical in this industry.

[h]Figures are based on EPA test data. Industry test data ranged from 0.39 - 1.79 kg/Mg (0.78 - 3.58 lb/ton).

[i]No ammonia control demonstrated by scrubbers installed for particulate control. Some increase in ammonia emissions exiting the control device was noted.

[j]Reference 19. Feed grade factors were determined at an ambient temperature of 302K (85°F) and agricultural grade factors at an ambient temperature of 299K (80°F). For fluidized bed prilling, controlled emission factors are based on use of an entrainment scrubber.

[k]References 14 - 16. Controlled emission factors are based on use of a wet entrainment scrubber. Wet scrubbers are standard process equipment on drum granulators. Uncontrolled emissions were measured at the scrubber inlet.

[l]EPA test data indicated a range of 0.955 - 1.20 kg/Mg (1.91 - 2.40 lb/ton).

[m]EMISSION FACTOR RATING: C; Reference 1.

[n]EMISSION FACTOR RATING: C; Reference 1.

Urea manufacturers presently control particulate matter emissions from prill towers, coolers, granulators and bagging operations. With the exception of bagging operations, urea emission sources usually are controlled with wet scrubbers. The preference of scrubber systems over dry collection systems is primarily for the easy recycling of dissolved urea collected in the device. Scrubber liquors are recycled to the solution concentration process to eliminate waste disposal problems and to recover the urea collected.[1]

Fabric filters (baghouses) are used to control fugitive dust from bagging operations, where humidities are low and blinding of the bags is not a problem. However, many bagging operations are uncontrolled.[1]

References for Section 6.14

1. Urea Manufacturing Industry - Technical Document, EPA-450/3-81-001, U. S. Environmental Protection Agency, Research Triangle Park, NC, January 1981.

2. D. F. Bress, M. W. Packbier, "The Startup of Two Major Urea Plants," Chemical Engineering Progress, May 1977, p. 80.

3. A. V. Slack, "Urea," Fertilizer Development Trends, Noyes Development Corporation, Park Ridge, NJ, 1968, p. 121.

4. Written communication from J. M. Killen, Vistron Corporation, Lima, OH, to D. R. Goodwin, U. S. Environmental Protection Agency, Research Triangle Park, NC, December 21, 1978.

5. Written communication from J. P. Swanburg, Union Oil of California, Brea, CA, to D. R. Goodwin, U. S. Environmental Protection Agency, Research Triangle Park, NC, December 20, 1978.

6. Written communication from M. I. Bornstein and S. V. Capone, GCA Corporation, Bedford, MA, to E. A. Noble, U. S. Environmental Protection Agency, Research Triangle Park, NC, June 22, 1978.

7. Written communication from Gary McAlister, U. S. Environmental Protection Agency, Emission Measurement Branch, to Eric Noble, U. S. Environmental Protection Agency, Industrial Studies Branch, Research Triangle Park, NC, July 28, 1983.

8. Formaldehyde Use in Urea-Based Fertilizers, Report of the Fertilizer Institute's Formaldehyde Task Group, The Fertilizer Institute, Washington, D. C., February 4, 1983.

9. J. H. Cramer, "Urea Prill Tower Control Meeting 20% Opacity," Presented at the Fertilizer Institute Environmental Symposium, New Orleans, LA, April 1980.

10. Written communication from M. I. Bornstein, GCA Corporation, Bedford, MA, to E. A. Noble, U. S. Environmental Protection Agency, Research Triangle Park, NC, August 2, 1978.

11. Written communication from M. I. Bornstein and S. V. Capone, GCA Corporation, Bedford, MA, to E. A. Noble, U. S. Environmental Protection Agency, Research Triangle Park, NC, June 23, 1978.

12. Written communication from J. P. Alexander, Agrico Chemical Company, Donaldsonville, LA, to D. R. Goodwin, U. S. Environmental Protection Agency, NC, December 21, 1978.

13. Written communication from N. E. Picquet, W. R. Grace and Company, Memphis, TN, to D. R. Goodwin, U. S. Environmental Protection Agency, Research Triangle Park, NC, December 14, 1978.

14. Urea Manufacture: Agrico Chemical Company Emission Test Report, EMB Report 79-NHF-13a, U. S. Environmental Protection Agency, Research Triangle Park, NC, September 1980.

15. Urea Manufacture: Agrico Chemical Company Emission Test Report, EMB Report 78-NHF-4, U. S. Environmental Protection Agency, Research Triangle Park, NC, April 1979.

16. Urea Manufacture: CF Industries Emission Test Report, EMB Report 78-NHF-8, U. S. Environmental Protection Agency, Research Triangle Park, NC, May 1979.

17. Urea Manufacture: Union Oil of California Emission Test Report, EMB Report 78-NHF-7, U. S. Environmental Protection Agency, Research Triangle Park, NC, October 1979.

18. Urea Manufacture: Union Oil of California Emission Test Report, EMB Report 80-NHF-15, U. S. Environmental Protection Agency, Research Triangle Park, NC, September 1980.

19. Urea Manufacture: W. R. Grace and Company Emission Test Report, EMB Report 78-NHF-3, U. S. Environmental Protection Agency, Research Triangle Park, NC, December 1979.

20. Urea Manufacture: Reichhold Chemicals Emission Test Report, EMB Report 80-NHF-14, U. S. Environmental Protection Agency, Research Triangle Park, NC, August 1980.

7.1 PRIMARY ALUMINUM PRODUCTION

7.1.1 Process Description[1-2]

The base ore for primary aluminum production is bauxite, a hydrated oxide of aluminum consisting of 30 to 70 percent alumina (Al_2O_3) and lesser amounts of iron, silicon and titanium. The bauxite ore is first purified to alumina by the Bayer process, and this is then reduced to elemental aluminum. The production of alumina and the reduction of alumina to aluminum are seldom accomplished at the same facility. A schematic diagram of the primary production of aluminum is shown at Figure 7.1-1.

In the Bayer process, the ore is dried, ground in ball mills and mixed with a leaching solution of sodium hydroxide at an elevated temperature and pressure, producing a sodium aluminate solution which is separated from the bauxite impurities and cooled. As the solution cools, the hydrated aluminum oxide ($Al_2O_3 \cdot 3H_2O$) precipitates. Following separation and washing to remove iron oxide, silica and other impurities, the hydrated aluminum oxide is dried and calcined to produce a crystalline form of alumina (Al_2O_3), advantageous for electrolysis.

Aluminum metal is manufactured by the Hall-Heroult process, which involves the electrolytic reduction of alumina dissolved in a molten salt bath of cryolite (Na_3AlF_6) and various salt additives:

$$\underset{\text{Alumina}}{2Al_2O_3} \xrightarrow[\text{(reduction)}]{\text{Electrolysis}} \underset{\text{Aluminum}}{4Al} + \underset{\text{Oxygen}}{3O_2} \qquad (1)$$

The electrolytic reduction occurs in shallow rectangular cells, or "pots", which are steel shells lined with carbon. Carbon electrodes extend into the pot and serve as the anodes, and the carbon lining the steel shell is the cathode. Molten cryolite functions as both the electrolyte and the solvent for the alumina. Electrical resistance to the current passing between the electrodes generates heat that maintains cell operating temperatures between 950° and 1000°C (1730° and 1830°F). Aluminum is deposited at the cathode, where it remains as molten metal below the surface of the cryolite bath. The carbon anodes are continuously depleted by the reaction of oxygen (formed during the reaction) and anode carbon, to produce carbon monoxide and carbon dioxide. Carbon consumption and other raw material and energy requirements for aluminum production are summarized in Table 7.1-1. The aluminum product is periodically tapped beneath the cryolite cover and is fluxed to remove trace impurities.

Aluminum reduction cells are distinguished by the anode type and configuration used in the pots. Three types of pots are currently used, prebaked (PB), horizontal stud Soderberg (HSS), and vertical stud Soderberg (VSS). Most of the aluminum produced in the U. S. is processed in PB cells.

Anodes are produced as an ancillary operation at the reduction plant. In the paste preparation plant, petroleum coke is mixed with a pitch binder

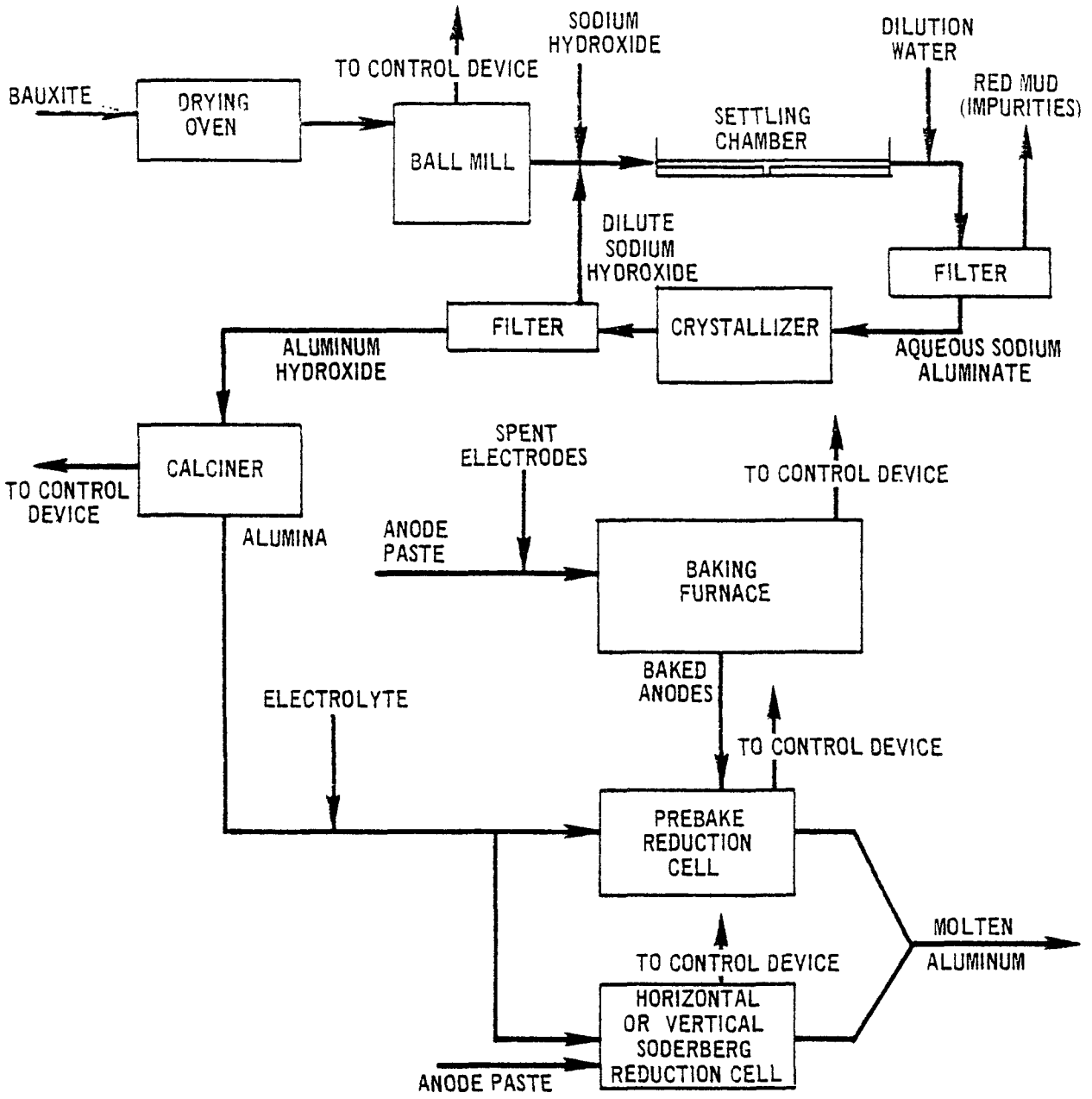

Figure 7.1-1. Schematic diagram of primary aluminum production process.

to form a paste which is used for Soderberg cell anodes, and for green anodes for prebake cells. Paste preparation includes crushing, grinding and screening of coke and cleaned spent anodes (butts), and blending with a pitch binder in a steam jacketed mixer. For Soderberg anodes, the thick paste mixture is transferred directly to the potroom for addition to the anode casings. In prebake anode preparation, the paste mixture is molded to form self supporting green anode blocks. The blocks are baked in a direct fired ring furnace or an indirect fired tunnel kiln. Baked anodes are then transferred to the rodding room, where the electrodes are attached. Volatile organic vapors from the pitch paste are emitted during anode baking, and most are destroyed in the baking furnace. The baked anodes, typically 14 to 24 per cell, are attached to metal rods and serve as replaceable anodes.

TABLE 7.1-1. RAW MATERIAL AND ENERGY REQUIREMENTS FOR ALUMINUM PRODUCTION

Parameter	Typical value
Cell operating temperature	~ 950°C (~ 1740°F)
Current through pot line	60,000 - 125,000 amperes
Voltage drop per cell	4.3 - 5.2
Current efficiency	85 - 90%
Energy required	13.2 - 18.7 kwh/kg aluminum (6.0 - 8.5 kwh/lb aluminum)
Weight alumina consumed	1.89 - 1.92 kg(lb) Al_2O_3/kg(lb) aluminum
Weight electrolyte fluoride consumed	0.03 - 0.10 kg(lb) fluoride/kg(lb) aluminum
Weight carbon electrode consumed	0.45 - 0.55 kg(lb) electrode/kg(lb) aluminum

In the electrolytic reduction of alumina, the carbon anodes are lowered into the cell and consumed at a rate of about 2.5 centimeters (1 inch) per day. Prebaked cells are preferred over Soderberg cells for their lower power requirements, reduced generation of volatile pitch vapors from the carbon anodes, and provision for better cell hooding to capture emissions.

The second most commonly used reduction cell is the horizontal stud Soderberg (HSS). This type of cell uses a "continuous" carbon anode. Green anode paste is periodically added at the top of the anode casing of the pot and is baked by the heat of the cell to a solid carbon mass as the material moves down the casing. The cell casing consists of aluminum sheeting and perforated steel channels, through which electrode connections (studs) are inserted horizontally into the anode paste. During reduction, as the baking anode is lowered, the lower row of studs and the bottom channel are removed, and the flexible electrical connectors are moved to a higher row of studs. High molecular weight organics from the anode paste are released, along with other cell emissions. The heavy tars can cause plugging of exhaust ducts, fans and emission control equipment.

The vertical stud Soderberg (VSS) cell is similar to the HSS cell, except that the studs are mounted vertically in the anode paste. Gases from the VSS

cells can be ducted to gas burners, and the tar and oils combusted. The construction of the HSS cell prevents the installation of an integral gas collection device, and hooding is restricted to a canopy or skirt at the base of the cell, where the hot anode enters the cell bath.

Casting involves pouring molten aluminum into molds and cooling it with water. At some plants, before casting, the molten aluminum may be batch treated in furnaces to remove oxide, gaseous impurities and active metals such as sodium and magnesium. One process consists of adding a flux of chloride and fluoride salts and then bubbling chlorine gas, usually mixed with an inert gas, through the molten mixture. Chlorine reacts with the impurities to form HCl, Al_2O_3 and metal chloride emissions. A dross forms and floats on the molten aluminum and is removed before casting.[11]

7.1.2 Emissions and Controls[1-3,10]

Controlled and uncontrolled emission factors for total particulate matter, fluoride and sulfur oxides are presented in Table 7.1-2. Fugitive particulate and fluoride emission factors for reduction cells are also presented in this Table.

In the preparation of refined alumina from bauxite, large amounts of particulates are generated during the calcining of hydrated aluminum oxide, but the economic value of this dust is such that extensive controls are employed to reduce emissions to relatively small quantities. Small amounts of particulates are emitted from the bauxite grinding and materials handling processes.

Emissions from aluminum reduction processes consist primarily of gaseous hydrogen fluoride and particulate fluorides, alumina, carbon monoxide, volatile organics, and sulfur dioxide from the reduction cells, and fluorides, vaporized organics and sulfur dioxide from the anode baking furnaces.

The source of fluoride emissions from reduction cells is the fluoride electrolyte, which contains cryolite, aluminum fluoride (AlF_3), and fluorspar (CaF_2). For normal operation, the weight, or "bath", ratio of sodium fluoride (NaF) to AlF_3 is maintained between 1.36 and 1.43 by the addition of AlF_3. This increases the cell current efficiency and lowers the bath melting point, permitting lower operating temperature in the cell. Cell fluoride emissions are decreased by lowering the operating temperature. The ratio of gaseous (mainly hydrogen fluoride and silicon tetrafluoride) to particulate fluorides varies from 1.2 to 1.7 with PB and HSS cells, but attains a value of approximately 3.0 with VSS cells.

Particulate emissions from reduction cells consist of alumina and carbon from anode dusting, cryolite, aluminum fluoride, calcium fluoride, chiolite ($Na_5Al_3F_{14}$) and ferric oxide. Representative size distributions for particulate emissions from PB cells and HSS cells are presented in Table 7.1-3. Particulates less than 1 micron in diameter represent the largest fraction (35 - 44 percent) for uncontrolled emissions. In one HSS cell, uncontrolled particulate emissions from one HSS cell had a mass mean particle diameter of 5.5 microns. Thirty percent by mass of the particles were submicron, and 16 percent were less than 0.2 microns in diameter.[7]

TABLE 7.1-2. EMISSION FACTORS FOR PRIMARY ALUMINUM PRODUCTION PROCESSES[a]

EMISSION FACTOR RATING: A

Operation	Total Particulate[b]		Gaseous Fluoride (HF)		Particulate Fluoride (F)		Sulfur Oxides		References
	Kg/Mg	lb/ton	kg/Mg	lb/ton	kg/Mg	lb/ton	kg/Mg	lb/ton	
Bauxite grinding									
Uncontrolled	3.0	6.0	Neg	Neg	NA	NA	NA	NA	1,3
Spray tower	0.9	1.8	Neg	Neg	NA	NA	NA	NA	1,3
Floating bed scrubber	0.85	1.7	Neg	Neg	NA	NA	NA	NA	1,3
Quench tower and spray screen	0.5	1.0	Neg	Neg	NA	NA	NA	NA	1,3
Electrostatic precipitator (ESP)	0.06	0.12	Neg	Neg	NA	NA	NA	NA	1,3
Aluminum hydroxide									
Calcining									
Uncontrolled	100.0	200.0	Neg	Neg	NA	NA	NA	NA	1,3
Spray tower	30.0	60.0	Neg	Neg	NA	NA	NA	NA	1,3
Floating bed scrubber	28.0	56.0	Neg	Neg	NA	NA	NA	NA	1,3
Quench tower	17.0	34.0	Neg	Neg	NA	NA	NA	NA	1,3
ESP	2.0	4.0	Neg	Neg	NA	NA	NA	NA	1,3
Anode baking furnace									
Uncontrolled	1.5	3.0	0.45	0.9	0.05	0.1	c	c	2,9,10
Fugitive	NA	NA	NA	NA	NA	NA	NA	NA	
Spray tower	0.375	0.75	0.02	0.04	0.015	0.03	NA	NA	9
ESP	0.375	0.75	0.02	0.04	0.015	0.03	NA	NA	2
Dry alumina scrubber	0.03	0.06	0.0045	0.009	0.001	0.002	NA	NA	2,9
Prebake cell									
Uncontrolled	47.0	94.0	12.0	24.0	10.0	20.0	c	c	1,2,9,10
Fugitive	2.5	5.0	0.6	1.2	0.5	1.0	NA	NA	2,9
Emissions to collector	44.5	89.0	11.4	22.8	9.5	19.0	NA	NA	2
Multiple cyclones	9.8	19.6	11.4	22.8	2.1	4.2	NA	NA	2
Dry alumina scrubber	0.9	1.8	0.1	0.2	0.2	0.4	NA	NA	2,9
Dry ESP + spray tower	2.25	4.5	0.7	1.4	1.7	3.4	NA	NA	2,9
Spray tower	8.9	17.8	0.7	1.4	1.9	3.8	NA	NA	2
Floating bed scrubber	8.9	17.8	0.25	0.5	1.9	3.8	NA	NA	2
Coated bag filter dry scrubber	0.9	1.8	1.7	3.4	0.2	0.4	NA	NA	2
Cross flow packed bed	13.15	26.3	3.25	6.7	2.8	5.6	NA	NA	9
Dry + second scrubber	0.35	0.7	0.2	0.4	0.15	0.3	NA	NA	9

TABLE 7.1-2 (CONT.). EMISSION FACTORS FOR PRIMARY ALUMINUM PRODUCTION PROCESSES[a]

EMISSION FACTOR RATING: A

Operation	Total Particulate[b] kg/Mg	Total Particulate[b] lb/ton	Gaseous Fluoride (HF) kg/Mg	Gaseous Fluoride (HF) lb/ton	Particulate Fluoride (F) kg/Mg	Particulate Fluoride (F) lb/ton	Sulfur Oxides kg/Mg	Sulfur Oxides lb/ton	References
Vertical Soderberg stud cell									
Uncontrolled	39.0	78.0	16.5	33.0	5.5	11.0	NA	NA	2,9
Fugitive	6.0	12.0	2.45	4.9	0.85	1.7	NA	NA	9
Emissions to collector	33.0	66.0	14.05	28.1	4.65	9.3	NA	NA	9
Spray tower	8.25	16.5	0.15	0.3	1.15	2.3	NA	NA	2
Venturi scrubber	1.3	2.6	0.15	0.3	0.2	0.4	NA	NA	2
Multiple cyclones	16.5	33.0	14.05	28.1	2.35	4.7	NA	NA	2
Dry alumina scrubber	0.65	1.3	0.15	0.3	0.1	0.2	NA	NA	2
Scrubber + ESP + spray screen + scrubber	3.85	7.7	0.75	1.5	0.65	1.3	NA	NA	
Horizontal Soderberg stud cell									
Uncontrolled	49.0	98.0	11.0	22.0	6.0	12.0	NA	NA	2,9
Fugitive	5.0	10.0	1.1	2.2	0.6	1.2	NA	NA	2,9
Emissions to collector	44.0	88.0	9.9	19.8	5.4	10.8	NA	NA	2,9
Spray tower	11.0	22.0	3.75	7.5	1.35	2.7	NA	NA	2,9
Floating bed scrubber	9.7	19.4	0.2	0.4	1.2	2.4	NA	NA	2
Scrubber + wet ESP	0.9	1.8	0.1	0.2	0.1	0.2	NA	NA	2,9
Web ESP	0.9	1.8	0.5	1.0	0.1	0.2	NA	NA	9
Dry alumina scrubber	0.9	1.8	0.2	0.4	0.1	0.2	NA	NA	9

[a]For bauxite grinding, expressed as kg/Mg (lb/ton) of bauxite processed. For calcining of aluminum hydroxide, expressed as kg/Mg (lb/ton) of alumina produced. All other factors are per Mg (ton) of molten aluminum product. Emission factors for sulfur oxides have C ratings. NA = not available.

[b]Includes particulate fluorides.

[c]Anode baking furnace, uncontrolled SO_2 emissions (excluding furnace fuel combustion emissions):

$$20(C)(S)(1-.01\ K)\ \text{kg/Mg}\ [40(C)(S)(1-.01\ K)\ \text{lb/ton}]$$

Prebake (reduction) cell, uncontrolled SO_2 emissions:

$$0.2(C)(S)(K)\ \text{kg/Mg}\ [0.4(C)(S)(K)\ \text{lb/ton}]$$

Where: C = Anode consumption* during electrolysis, lb anode consumed/lb Al produced
S = % sulfur in anode before baking
K = % of total SO_2 emitted by prebake (reduction) cells

*Anode consumption weight is weight of anode paste (coke + pitch) before baking.

TABLE 7.1-3. REPRESENTATIVE PARTICLE SIZE DISTRIBUTIONS OF UNCONTROLLED EMISSIONS FROM PREBAKED AND HORIZONTAL STUD SODERBERG CELLS[a]

Size range (μ)	Particles (wt %)	
	PB	HSS
<1	35	44
1 to 5	25	26
5 to 10	8	8
10 to 20	5	6
20 to 44	5	4
>44		

[a]Reference 1.

Emissions from reduction cells also include hydrocarbons or organics, carbon monoxide and sulfur oxides. Small amounts of hydrocarbons are released by PB pots, and larger amounts are emitted from HSS and VSS pots. In vertical cells, these organics are incinerated in integral gas burners. Sulfur oxides originate from sulfur in the anode coke and pitch. The concentrations of sulfur oxides in VSS cell emissions range from 200 to 300 parts per million. Emissions from PB plants usually have SO_2 concentrations ranging from 20 to 30 parts per million.

Emissions from anode bake ovens include the products of fuel combustion; high boiling organics from the cracking, distillation and oxidation of paste binder pitch; sulfur dioxide from the sulfur in carbon paste, primarily from the petroleum coke, fluorides from recycled anode butts; and other particulate matter. The concentrations of uncontrolled SO_2 emissions from anode baking furnaces range from 5 to 47 parts per million (based on 3 percent sulfur in coke.)[8]

A variety of control devices has been used to abate emissions from reduction cells and anode baking furnaces. To control gaseous and particulate fluorides and particulate emissions, one or more types of wet scrubbers (spray tower and chambers, quench towers, floating beds, packed beds, venturis, and self induced sprays have been applied to all three types of reduction cells and to anode baking furnaces. Also, particulate control methods such as electrostatic precipitators (wet and dry), multiple cyclones and dry alumina scrubbers (fluid bed, injected, and coated filter types) are employed with baking furnaces and on all three cell types. Also, the alumina adsorption systems are being used on all three cell types to control both gaseous and particulate fluorides by passing the pot offgases through the entering alumina feed, which adsorbs the fluorides. This technique has an overall control efficiency of 98 to 99 percent. Baghouses are then used to collect residual fluorides entrained in the alumina and to recycle them to the reduction cells. Wet electrostatic precipitators approach adsorption in particulate removal efficiency but must be coupled to a wet scrubber or coated baghouse to catch hydrogen fluoride.

Scrubber systems also remove a portion of the SO_2 emissions. These emissions could be reduced by wet scrubbing or by reducing the quantity of sulfur in the anode coke and pitch, i. e., calcining the coke.

In the hydrated aluminum oxide calcining, bauxite grinding and materials handling operations, various dry dust collection devices (centrifugal collectors, multiple cyclones, or electrostatic precipitators and/or wet scrubbers) have been used.

Potential sources of fugitive particulate emissions in the primary aluminum industry are bauxite grinding, materials handling, anode baking and three types of reduction cells (see Table 7.1-2). These fugitives probably have particle size distributions similar to those presented in Table 7.1-3.

References for Section 7.1

1. Engineering and Cost Effectiveness Study of Fluoride Emissions Control, Volume I, APTD-0945, U. S. Environmental Protection Agency, Research Triangle Park, NC, January 1972.

2. Air Pollution Control in the Primary Aluminum Industry, Volume I, EPA-450/3-73-004a, U. S. Environmental Protection Agency, Research Triangle Park, NC, July 1973.

3. Particulate Pollutant System Study, Volume I, APTD-0743, U. S. Environmental Protection Agency, Research Triangle Park, NC, May 1971.

4. Emissions from Wet Scrubbing System, Report Number Y-7730-E, York Research Corp., Stamford, CT, May 1972.

5. Emissions from Primary Aluminum Smelting Plant, Report Number Y-7730-B, York Research Corp., Stamford, CT, June 1972.

6. Emissions from the Wet Scrubber System, Report Number Y-7730-F, York Research Corp., Stamford, CT, June 1972.

7. T. R. Hanna and M. J. Pilat, "Size Distribution of Particulates Emitted from a Horizontal Spike Soderberg Aluminum Reduction Cell", Journal of the Air Pollution Control Association, 22:533-536, July 1972.

8. Background Information for Standards of Performance: Primary Aluminum Industry, Volume 1: Proposed Standards, EPA-450/2-74-020a, U. S. Environmental Protection Agency, Research Triangle Park, NC, October 1974.

9. Primary Aluminum: Guidelines for Control of Fluoride Emissions from Existing Primary Aluminum Plants, EPA-450/2-78-049b, U. S. Environmental Protection Agency, Research Triangle Park, NC, December 1979.

10. Written communication from T. F. Albee, Reynolds Aluminum, Richmond, VA, to A. A. MacQueen, U. S. Environmental Protection Agency, Research Triangle Park, NC, October 20, 1982.

11. Environmental Assessment: Primary Aluminum, Interim report, U. S. Environmental Protection Agency, Cincinnati, OH, October 1979.

7.3 PRIMARY COPPER SMELTING

7.3.1 Process Description[1-3]

In the United States, copper is produced from sulfide ore concentrates principally by pyrometallurgical smelting methods. Because the copper ores usually contain less than 1 percent copper, they must be concentrated before transport to a smelter. Concentrations of 15 to 35 percent copper are accomplished at the mine site by crushing, grinding and flotation. Sulfur content of the concentrate ranges from 25 to 35 percent, and most of the remainder is iron (25 percent) and water (10 percent). Some concentrates also contain significant quantities of arsenic, cadmium, lead, antimony and other heavy metals.

The conventional pyrometallurgical copper smelting process is illustrated in Figure 7.3-1. The process includes roasting of ore concentrates to produce calcine, smelting of roasted (calcine feed) or unroasted (green feed) ore concentrates to produce matte, and converting of the matte to yield blister copper product (about 99 percent pure). Typically, the blister copper is fire refined in an anode furnace, cast into "anodes" and sent to an electrolytic refinery for further impurity elimination.

In roasting, charge material of copper concentrate mixed with a siliceous flux (often a low grade ore) is heated in air to about 650°C (1,200°F), eliminating 20 to 50 percent of the sulfur as sulfur dioxide (SO_2). Portions of such impurities as antimony, arsenic and lead are driven off, and some of the iron is converted to oxide. The roasted product, called calcine, serves as a dried and heated charge for the smelting furnace. Either multiple hearth or fluidized bed roasters are used for roasting copper concentrate. The fluid bed roaster is similar in appearance to a multihearth roaster but has fewer intricate internal mechanical systems. Multihearth roasters accept moist concentrate, whereas fluid bed roasters are fed finely ground material (60 percent minus 200 mesh). With both of these types, the roasting is autogenous. Because there is less air dilution, higher SO_2 concentrations are present in fluidized bed roaster gases than in multiple hearth roaster gases.

In the smelting process, either hot calcines from the roaster or raw unroasted concentrate are melted with siliceous flux in a smelting furnace to produce copper matte, a molten mixture of cuprous sulfide (Cu_2S) and ferrous sulfide (FeS) and some heavy metals. The required heat comes from partial oxidation of the sulfide charge and from burning external fuel. Most of the iron and some of the impurities in the charge oxidize and combine with the fluxes to form a slag on top of the molten bath, which is periodically removed and discarded. Copper matte remains in the furnace until tapped. Mattes produced by the domestic industry range from 35 to 65 percent copper, with about 45 percent the most common. This copper content percentage is referred to as the matte grade. Currently, four smelting furnace technologies are used in the U.S., reverberatory, electric, Noranda and Outokumpu (flash).

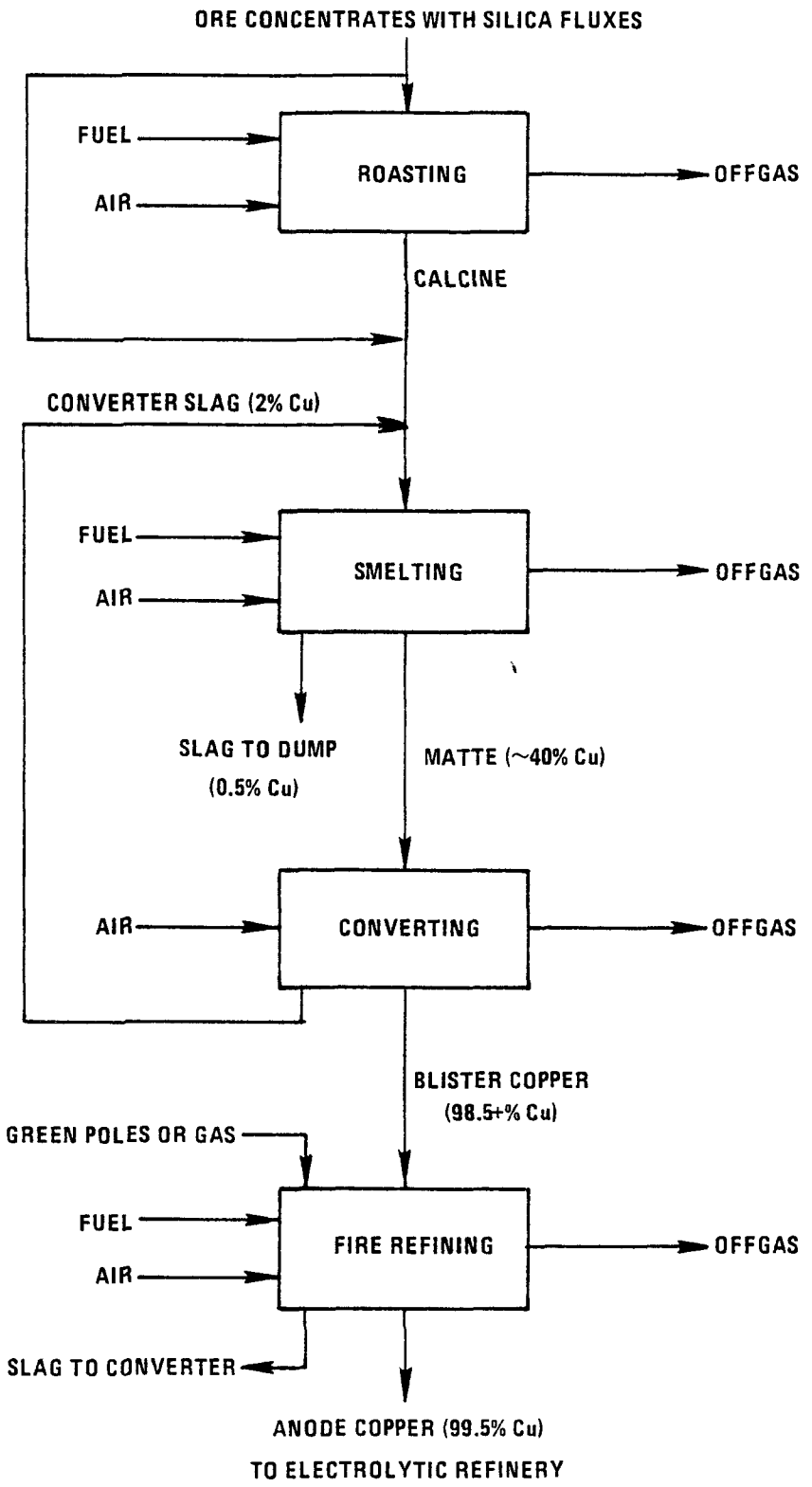

Figure 7.3-1. A conventional copper smelting process.

Reverberatory furnace operation is a continuous process, with frequent charging of input materials and periodic tapping of matte and skimming of slag. Reverberatory furnaces typically process from 800 to 1,200 Mg (900 to 1,300 tons) of charge per day. Heat is supplied by combustion of oil, gas or pulverized coal. Furnace temperatures may exceed 1,500°C (2,730°F).

For smelting in electric arc furnaces, heat is generated by the flow of an electric current in submerged carbon electrodes lowered through the furnace roof into the slag layer of the molten bath. The feed generally consists of dried concentrates or calcines, and charging wet concentrates is avoided. The chemical and physical changes occurring in the molten bath are similar to those occurring in the molten bath of a reverberatory furnace. Also, the matte and slag tapping practices are similar at both furnaces. Electric furnaces do not produce fuel combustion gases, so flow rates are lower and SO_2 concentrations higher in effluent gas than in that of reverberatory furnaces.

Flash furnace smelting combines the operations of roasting and smelting to produce a high grade copper matte from concentrates and flux. In flash smelting, dried ore concentrates and finely ground fluxes are injected together with oxygen, preheated air, or a mixture of both into a furnace of special design, where temperature is maintained at approximately 1,000°C (1,830°F). Flash furnaces, in contrast to reverberatory and electric furnaces, use the heat generated from partial oxidation of their sulfide sulfur charge to provide much or all of the energy (heat) required for smelting. They also produce offgas streams containing high concentrations of SO_2.

Slag produced by flash furnace operations contains significantly higher amounts of copper than does that from reverberatory or electric furnace operations. As a result, the flash furnace and converter slags produced at flash smelters are treated in a slag cleaning furnace to recover the copper. Slag cleaning furnaces usually are small electric arc furnaces. The flash furnace and converter slags are charged to a slag cleaning furnace and are allowed to settle under reducing conditions with the addition of coke or iron sulfide. The copper, which is in oxide form in the slag, is converted to copper sulfide, subsequently removed from the furnace and charged to a converter with the regular matte.

The Noranda process, as originally designed, allowed the continuous production of blister copper in a single vessel, by effectively combining roasting, smelting and converting into one operation. Metallurgical problems, however, led to the operation of these reactors for the production of copper matte. As in flash smelting, the Noranda process takes advantage of the heat energy available from the copper ore. The remaining thermal energy required is supplied by oil burners or by coal mixed with the ore concentrates.

The final step in the production of blister copper is converting. The purpose of converting is to eliminate the remaining iron and sulfur present in the matte, leaving molten "blister" copper. All but one U. S. smelter use Pierce-Smith converters, which are refractory lined cylindrical steel shells mounted on trunnions at either end and rotated about the major axis for charging and pouring. An opening in the center of the converter functions as

a mouth, through which molten matte, siliceous flux and scrap copper are charged and gaseous products are vented. Air or oxygen rich air is blown through the molten matte. Iron sulfide (FeS) is oxidized to iron oxide (FeO) and SO_2, and the FeO combines with the flux to form a slag on the surface. At the end of this segment of the converter operation, termed the slag blow, the slag is skimmed and generally recycled back to the smelting furnace. The process of charging, blowing and slag skimming is repeated until an adequate amount of relatively pure Cu_2S, called "white metal", accumulates in the bottom of the converter. A renewed air blast oxidizes the remaining copper sulfide sulfur to SO_2, leaving blister copper in the converter. The blister copper is subsequently removed and transferred to refining facilities. This segment of converter operation is termed the finish blow. The SO_2 produced throughout the operation is vented to pollution control devices.

One smelter uses Hoboken converters, the primary advantage of which lies in emission control. The Hoboken converter is essentially like a conventional Pierce-Smith converter, except that this vessel is fitted with a side flue at one end shaped as an inverted U. This flue arrangement permits siphoning of gases from the interior of the converter directly to offgas collection, leaving the converter mouth under a slight vacuum.

Blister copper usually contains from 98.5 to 99.5 percent pure copper. Impurities may include gold, silver, antimony, arsenic, bismuth, iron, lead, nickel, selenium, sulfur, tellurium and zinc. To purify blister copper further, fire refining and electrolytic refining are used. In fire refining, blister copper is placed in a fire refining furnace, a flux is usually added, and air is blown through the molten mixture to oxidize remaining impurities, which are removed as a slag. The remaining metal bath is subjected to a reducing atmosphere to reconvert cuprous oxide to copper. Temperature in the furnace is around 1,100°C (2,010°F). The fire refined copper is cast into anodes and further refined electrolytically. Electrolytic refining separates copper from impurities by electrolysis in a solution containing copper sulfate and sulfuric acid. Metallic impurities precipitate from the solution and form a sludge that is removed and treated to recover precious metals. Copper is dissolved from the anode and deposited at the cathode. Cathode copper is remelted and made into bars, ingots or slabs for marketing purpose. The copper produced is 99.95 to 99.97 percent pure.

7.3.2 Emissions and Controls

Particulate matter and sulfur dioxide are the principal air contaminants emitted by primary copper smelters. These emissions are generated directly from the processes involved, as in the liberation of SO_2 from copper concentrate during roasting or in the volatilization of trace elements as oxide fumes. Fugitive emissions are generated by leaks from major equipment during material handling operations.

Roasters, smelting furnaces and converters are sources of both particulate matter and sulfur oxides. Copper and iron oxides are the primary constituents of the particulate matter, but other oxides such as arsenic, antimony, cadmium, lead, mercury and zinc may also be present, with metallic sulfates and sulfuric

acid mist. Fuel combustion products also contribute to particulate emissions from multihearth roasters and reverberatory furnaces.

Single stage electrostatic precipitators (ESP) are widely used in the primary copper industry for the control of particulate emissions from roasters, smelting furnaces and converters. Many of the existing ESPs are operated at elevated temperatures, usually at 200 to 340°C (400 to 650°F) and are termed "hot ESPs". If properly designed and operated, these ESPs remove 99 percent or more of the condensed particulate matter present in gaseous effluents. However, at these elevated temperatures, a significant amount of volatile emissions such as arsenic trioxide (As_2O_3) and sulfuric acid mist is present as vapor in the gaseous effluent and thus can not be collected by the particulate control device at elevated temperatures. At these temperatures, the arsenic trioxide in the vapor state will pass through an ESP. Therefore, the gas stream to be treated must be cooled sufficiently to ensure that most of the arsenic present is condensed before entering the control device for collection. At some smelters, the gas effluents are cooled to about 120°C (250°F) temperature before entering a particulate control system, usually an ESP (termed "cold ESP"). Spray chambers or air infiltration are used for gas cooling. Fabric filters can also be used for particulate matter collection.

Gas effluents from roasters are usually sent to an ESP or spray chamber/ESP system or are combined with smelter furnace gas effluents before particulate collection. Overall, the hot ESPs remove only 20 to 80 percent of the total particulate (condensed and vapor) present in the gas. The cold ESPs may remove more than 95 percent of the total particulate present in the gas. Particulate collection systems for smelting furnaces are similar to those for roasters. Reverberatory furnace offgases are usually routed through waste heat boilers and low velocity balloon flues to recover large particles and heat, then are routed through an ESP or spray chamber/ESP system.

In the standard Pierce-Smith converter, flue gases are captured during the blowing phase by the primary hood over the converter mouth. To prevent the hood's binding to the converter with splashing molten metal, there is a gap between the hood and the vessel. During charging and pouring operations, significant fugitives may be emitted when the hood is removed to allow crane access. Converter offgases are treated in ESPs to remove particulate matter and in sulfuric acid plants to remove SO_2.

Remaining smelter processes handle material that contains very little sulfur, hence SO_2 emissions from these processes are insignificant. Particulate emissions from fire refining operations, however, may be of concern. Electrolytic refining does not produce emissions unless the associated sulfuric acid tanks are open to the atmosphere. Crushing and grinding systems used in ore, flux and slag processing also contribute to fugitive dust problems.

Control of SO_2 emissions from smelter sources is most commonly performed in a single or double contact sulfuric acid plant. Use of a sulfuric acid plant to treat copper smelter effluent gas streams requires that gas be free from particulate matter and that a certain minimum inlet SO_2 concentration be maintained. Practical limitations have usually restricted sulfuric acid plant application to gas streams that contain at least 3.0 percent SO_2. Table 7.3-1 shows typical average SO_2 concentrations for the various smelter unit offgases.

TABLE 7.3-1. TYPICAL SULFUR DIOXIDE CONCENTRATIONS IN OFFGASES FROM PRIMARY COPPER SMELTING SOURCES

Unit	SO_2 concentration Volume %
Multiple hearth roaster	1.5 - 3
Fluidized bed roaster	10 - 12
Reverberatory furnace	0.5 - 1.5
Electric arc furnace	4 - 8
Flash smelting furnace	10 - 20
Continuous smelting furnace	5 - 15
Pierce-Smith converter	4 - 7
Hoboken converter	8
Single contact H_2SO_4 plant	0.2 - 0.26
Double contact H_2SO_4 plant	0.05

Currently, converter gas effluents at most of the smelters are treated for SO_2 control in sulfuric acid plants. Gas effluents from some multihearth roaster operations and all fluid bed roaster operations are also treated in sulfuric acid plants. The weak SO_2 content gas effluents from the reverberatory furnace operations are usually released to the atmosphere with no reduction of SO_2. The gas effluents from the other types of smelter furnaces, due to their higher contents of SO_2, are treated in sulfuric acid plants before being vented. Typically, single contact acid plants achieve 92.5 to 98 percent conversion of SO_2 to acid, with approximately 2000 ppm SO_2 remaining in the acid plant effluent gas. Double contact acid plants collect from 98 to more than 99 percent of the SO_2 and emit about 500 ppm SO_2. Absorption of the SO_2 in dimethylaniline (DMA) solution has also been used in U. S. smelters to produce liquid SO_2.

Emissions from hydrometallurgical smelting plants generally are small in quantity and are easily controlled. In the Arbiter process, ammonia gas escapes from the leach reactors, mixer/settlers, thickeners and tanks. For control, all of these units are covered and vented to a packed tower scrubber to recover and recycle the ammonia.

Actual emissions from a particular smelter unit depend upon the configuration of equipment in that smelting plant and its operating parameters. Table 7.3-2 gives emission factors for the major units for various smelter configurations.

7.3.3 Fugitive Emissions

The process sources of particulate matter and SO_2 emissions are also the potential fugitive sources of these emissions, roasting, smelting, converting, fire refining and slag cleaning. Table 7.3-3 presents the potential fugitive emission factors for these sources. The actual quantities of emissions from these sources depend on the type and condition of the equipment and on the smelter operating techniques. Although emissions from many of these sources are released inside a building, ultimately they are discharged to the atmosphere.

Fugitive emissions are generated during the discharge and transfer of hot calcine from multihearth roasters, and negligible amounts of fugitive emissions

TABLE 7.3-2. EMISSION FACTORS FOR PRIMARY COPPER SMELTERS[a,b]

EMISSION FACTOR RATING: B

Configuration[c]	Unit	Particulate matter		SO_2[d]		References
		Kg/Mg	lb/ton	Kg/Mg	lb/ton	
Reverberatory furnace (RF)	RF	25	50	160	320	4-10,
followed by converters (C)	C	18	36	370	740	9, 11-15
Multihearth roaster (MHR)	MHR	22	45	140	280	4-5, 16-17
followed by reverberatory	RF	25	50	90	180	4-9, 18-19
furnace (RF) and converters (C)	C	18	36	300	600	8, 11-13
Fluid bed roaster (FBR) followed	FBR	NA	NA	180	360	20
by reverberatory furnace (RF)	RF	25	50	90	160	e
and converters (C)	C	18	36	270	540	e
Concentrate dryer (CD) followed	CD	5	10	0.5	1	21-22
by electric furnace (EF) and	EF	50	100	120	240	15
converters (C)	C	18	36	410	820	8, 11-13, 15
Fluid bed roaster (FBR) followed	FBR	NA	NA	180	360	20
by electric furnace (EF) and	EF	50	100	45	90	15, 23
converters (C)	C	18	36	300	600	e
Concentrate dryer (CD) followed	CD	5	10	0.5	1	21-22
by flash furnace (FF),	FF	70	140	410	820	24
cleaning furnace (SS) and	SS[f]	5	10	0.5	1	22
converters (C)	C[e]	NA[g]	NA[g]	120	240	22
Concentrate dryer (CD) followed	CD	5	10	0.5	1	21-22
by Noranda reactors (NR) and	NR	NA	NA	NA	NA	
converters (C)	C	NA	NA	NA	NA	

[a]Expressed as units per unit weight of concentrated ore processed by the smelter. Approximately 4 unit weights of concentrate are required to produce 1 unit weight of blister copper. NA = not available.

[b]For particulate matter removal, gaseous effluents from roasters, smelting furnaces and converters are usually treated in hot ESPs at 200 - 340°C (400 - 650°F) or in cold ESPs with gases cooled to about 120°C (250°F) before ESP. Particulate emissions from copper smelters contain volatile metallic oxides which remain in vapor form at higher temperatures and which condense to solid particulate at lower temperatures (120°C or 250°F). Therefore, overall particulate removal in hot ESPs may range from 20 - 80%, and overall particulate removal in cold ESPs may be 99%. Converter gas effluents and, at some smelters, roaster gas effluents are treated in single contact acid plants (SCAP) or double contact acid plants (DCAP) for SO_2 removal. Typical SCAPs are about 96% efficient, and DCAPs are up to 99.8 % efficient in SO_2 removal. They also remove over 99% of particulate matter.

[c]In addition to sources indicated, each smelter configuration contains fire refining anode furnaces after the converters. Anode furnaces emit negligible SO_2. No particulate emission data are available for anode furnaces.

[d]Factors for all configurations except reverberatory furnace followed by converters were developed by normalizing test data for several smelters to represent 30% sulfur content in concentrated ore.

[e]Based on the test data for the configuration multihearth roaster followed by reverberatory furnace and converters.

[f]Used to recover copper from furnace slag and converter slag.

[g]Since the converters at flash furnace and Noranda furnace smelters treat high copper content matte, converter particulate emissions from flash furnace smelters are expected to be lower than corresponding emissions from conventional smelters consisting of multihearth roasters, reverberatory furnace, and converters.

may also come from the charging of these roasters. Fluid bed roasting, a closed loop operation, has negligible fugitive emissions.

Matte tapping and slag skimming operations are sources of fugitive emissions from smelting furnaces. Fugitive emissions can also result from charging of a

TABLE 7.3-3. FUGITIVE EMISSION FACTORS FOR PRIMARY COPPER SMELTERS[a]

EMISSION FACTOR RATING: B

Source	Particulate matter		SO_2	
	Kg/Mg	lb/ton	Kg/Mg	lb/ton
Roaster calcine discharge	1.3	2.6	0.5	1
Smelting furnace[b]	0.2	0.4	2	4
Converters	2.2	4.4	65	130
Converter slag return	NA	NA	0.05	0.1
Anode furnace	0.25	0.5	0.05	0.1
Slag cleaning furnace[c]	4	8	3	6

[a]References 16, 22, 25-31. Expressed as mass units per unit weight of concentrated ore processed by the smelter. Approximately 4 unit weights of concentrate are required to produce 1 unit weight of copper metal. Factors for flash furnace smelters and Noranda furnace smelters may be slightly lower than reported values. NA = not available.
[b]Includes fugitive emissions from matte tapping and slag skimming operations. About 50% of fugitive particulate matter emissions and about 90% of total SO_2 emissions are from matte tapping operations. The remainder is from slag skimming.
[c]Used to treat slags from smelting furnaces and converters at the flash furnace smelter.

smelting furnace or from leaks, depending upon the furnace type and condition. A typical single matte tapping operation lasts from 5 to 10 minutes, and a single slag skimming operation lasts from 10 to 20 minutes. Tapping frequencies vary with furnace capacity and type. In an 8 hour shift, matte is tapped 5 to 20 times, and slag is skimmed 10 to 25 times.

Each of the various stages of converter operation, the charging, blowing, slag skimming, blister pouring, and holding, is a potential source of fugitive emissions. During blowing, the converter mouth is in stack (i. e., a close fitting primary hood is over the mouth to capture offgases). Fugitive emissions escape from the hoods. During charging, skimming and pouring operations, the converter mouth is out of stack (i. e., the converter mouth is rolled out of its vertical position, and the primary hood is isolated). Fugitive emissions are discharged during the rollout.

At times during normal smelting operations, slag or blister copper can not be transferred immediately from or to the converters. This condition, the holding stage, may occur for several reasons, including insufficient matte in the smelting furnace, the unavailability of a crane, and others. Under these conditions, the converter is rolled out of vertical position and remains in a holding position, and fugitive emissions may result.

Fugitive emissions from primary copper smelters are captured by applying either local or general ventilation techniques. Once captured, emissions may

be vented directly to a collection device or be combined with process offgases before collection. Close fitting exhaust hood capture systems are used for multihearth roasters, and hood ventilation systems for smelter matte tapping and slag skimming operations. For converters, secondary hood systems or building evacuation systems are used.

7.3.4 Lead Emission Factors

Both the process and the fugitive particulate matter emissions from various equipment at primary copper smelters contain oxides of many inorganic elements, including lead. The lead content of particulate matter emissions depends upon both the lead content of concentrate feed into the smelter and the process offgas temperature. Lead emissions are effectively removed in particulate control systems operating at low temperatures of about 120°C (250°F).

Table 7.3-4 presents lead emission factors for various operations of primary copper smelters. These emission factors represent totals of both process and fugitive emissions.

TABLE 7.3-4. LEAD EMISSION FACTORS FOR PRIMARY COPPER SMELTERS[a]

EMISSION FACTOR RATING: C

Operation	Lead emissions[b]	
	kg/Mg	lb/ton
Roasting[c]	0.075	0.15
Smelting[d]	0.036	0.072
Converting[e]	0.13	0.27
Refining	NA	NA

[a]Reference 32. Expressed as units per unit weight of concentrated ore processed by the smelter. Approximately 4 unit weights of concentrate are required to produce 1 unit weight of copper metal. Based on test data for several smelters containing from 0.1 to 0.4% lead in feed throughput. NA = not available.
[b]For process and fugitive emissions totals.
[c]Based on test data on multihearth roasters. Includes the total of process emissions and calcine transfer fugitive emissions. Calcine transfer fugitive emissions constitute about 10 percent of the total of process and fugitive emissions.
[d]Based on test data on reverberatory furnaces. Includes total process emissions and fugitive emissions from matte tapping and slag skimming operations. Fugitive emissions from matte tapping and slag skimming operations amount to about 35% and 2%, respectively.
[e]Includes the total of process and fugitive emissions. Fugitive emissions constitute about 50 percent of the total.

References for Section 7.3

1. Background Information for New Source Performance Standards: Primary Copper, Zinc, and Lead Smelters, Volume I, Proposed Standards, EPA-450/2-74-002a, U. S. Environmental Protection Agency, Research Triangle Park, NC, October 1974.

2. Arsenic Emissions from Primary Copper Smelters - Background Information for Proposed Standards, Preliminary Draft, EPA Contract No. 68-02-3060, Pacific Environmental Services, Durham, NC, February 1981.

3. Background Information Document for Revision of New Source Performance Standards for Primary Copper Smelters, Draft Chapters 3 through 6, EPA Contract Number 68-02-3056, Research Triangle Institute, Research Triangle Park, NC, March 31, 1982.

4. Air Pollution Emission Test: ASARCO Copper Smelter, El Paso, Texas, EMB-77-CUS-6, U. S. Environmental Protection Agency, Research Triangle Park, NC, June 1977.

5. Written communication from W. F. Cummins, ASARCO, Inc., El Paso, TX, to A. E. Vervaert, U. S. Environmental Protection Agency, Research Triangle Park, NC, August 31, 1977.

6. AP-42 Background Files, Office of Air Quality Planning and Standards, U. S. Environmental Protection Agency, Research Triangle Park, NC.

7. Source Emissions Survey of Kennecott Copper Corporation, Copper Smelter Converter Stack Inlet and Outlet and Reverberatory Electrostatic Precipitator Inlet and Outlet, Hurley, New Mexico, File Number EA-735-09, Ecology Audits, Inc., Dallas, TX, April 1973.

8. Trace Element Study at a Primary Copper Smelter, EPA-600/2-78-065a and -065b, U. S. Environmental Protection Agency, Research Triangle Park, NC, March 1978.

9. Systems Study for Control of Emissions, Primary Nonferrous Smelting Industry, Volume II: Appendices A and B, PB-184885, National Technical Information Service, Springfield, VA, June 1969.

10. Design and Operating Parameters For Emission Control Studies: White Pine Copper Smelter, EPA-600/2-76-036a, U. S. Environmental Protection Agency, Washington, DC, February 1976.

11. R. M. Statnick, Measurement of Sulfur Dioxide, Particulate and Trace Elements in Copper Smelter Converter and Roaster/Reverberatory Gas Streams, PB-238095, National Technical Information Service, Springfield, VA, October 1974.

12. AP-42 Background Files, Office of Air Quality Planning and Standards, U. S. Environmental Protection Agency, Research Triangle Park, NC.

13. Design and Operating Parameters For Emission Control Studies, Kennecott - McGill Copper Smelter, EPA-600/2-76-036c, U. S. Environmental Protection Agency, Washington, DC, February 1976.

14. Emission Test Report (Acid Plant) of Phelps Dodge Copper Smelter, Ajo, Arizona, EMB-78-CUS-11, U. S. Environmental Protection Agency, Research Triangle Park, NC, March 1979.

15. S. Dayton, "Inspiration's Design for Clean Air", Engineering and Mining Journal, 175:6, June 1974.

16. Emission Testing of ASARCO Copper Smelter, Tacoma, Washington, EMB 78-CUS-12, U. S. Environmental Protection Agency, Research Triangle Park, NC, April 1979.

17. Written communication from A. L. Labbe, ASARCO Inc., Tacoma, WA, to S. T. Cuffe, U. S. Environmental Protection Agency, Research Triangle Park, NC, November 20, 1978.

18. Design and Operating Parameters for Emission Control Studies: ASARCO - Hayden Copper Smelter, EPA-600/2-76-036j, U. S. Environmental Protection Agency, Washington, DC, February 1976.

19. Pacific Environmental Services, Incorporated, Design and Operating Parameters for Emission Control Studies: Kennecott, Hayden Copper Smelter, EPA-600/2-76-036b, U. S. Environmental Protection Agency, Washington, DC, February 1976.

20. R. Larkin, Arsenic Emissions at Kennecott Copper Corporation, Hayden, AZ, EPA-76-NFS-1, U. S. Environmental Protection Agency, Research Triangle Park, NC, May 1977.

21. Emission Compliance Status, Inspiration Consolidated Copper Company, Inspiration, AZ, U. S. Environmental Protection Agency, San Francisco, CA, 1980.

22. Written communication from M. P. Scanlon, Phelps Dodge Corporation, to D. R. Goodwin, U. S. Environmental Protection Agency, Research Triangle Park, NC, October 18, 1978.

23. Written communication from G. M. McArthur, The Anaconda Company, to D. R. Goodwin, U. S. Environmental Protection Agency, Research Triangle Park, NC, June 2, 1977.

24. Telephone communication from V. Katari, Pacific Environmental Services, Inc., Durham, NC, to R. Winslow, Hidalgo Smelter, Phelps Dodge Corporation, Hidalgo, AZ, April 1, 1982.

25. Emission Test Report, Phelps Dodge Copper Smelter, Douglas, Arizona, EMB-78-CUS-8, U. S. Environmental Protection Agency, Research Triangle Park, NC, February 1979.

26. Emission Testing of Kennecott Copper Smelter, Magna, Utah, EMB-78-CUS-13, U. S. Environmental Protection Agency, Research Triangle Park, NC, April 1979.

27. Emission Test Report, Phelps Dodge Copper Smelter, Ajo, Arizona, EMB-78-CUS-9, U. S. Environmental Protection Agency, Research Triangle Park, NC, February 1979.

28. Written communication from R. D. Putnam, ASARCO, Inc., to M. O. Varner, ASARCO, Inc., Salt Lake City, UT, May 12, 1980.

29. Emission Test Report, Phelps Dodge Copper Smelter, Playas, New Mexico, EMB-78-CUS-10, U. S. Environmental Protection Agency, Research Triangle Park, NC, March 1979.

30. ASARCO Copper Smelter, El Paso, Texas, EMB-78-CUS-7, U. S. Environmental Protection Agency, Research Triangle Park, NC, April 25, 1978.

31. A. D. Church, et al., "Measurement of Fugitive Particulate and Sulfur Dioxide Emissions at Inco's Copper Cliff Smelter", Paper A-79-51, The Metallurgical Society of American Institute of Mining, Metallurgical, and Petroleum Engineers (AIME), New York, NY.

32. Copper Smelters, Emission Test Report - Lead Emissions, EMB-79-CUS-14, U. S. Environmental Protection Agency, Research Triangle Park, NC, September 1979.

Thus, fugitive particulate emissions from hot mix asphalt plants are mostly dust from aggregate storage, handling and transfer. Stone dust may range from 0.1 to more than 300 micrometers in diameter. On the average, 5 percent of cold aggregate feed is less than 74 micrometers (minus 200 mesh). Dust that may escape before reaching primary dust collection generally is 50 to 70 percent less than 74 micrometers. Materials emitted are given in Tables 8.1-1 and 8.1-4.

Emission factors for various materials emitted from the stack are given in Table 8.1-1. With the exception of aldehydes, the materials listed in this Table are also emitted from the mixer, but mixer concentrations are 5 to 100 fold smaller than stack concentrations, lasting only during the discharge of the mixer.

TABLE 8.1-1. EMISSION FACTORS FOR SELECTED MATERIALS FROM AN ASPHALTIC CONCRETE PLANT STACK[a]

Material emitted[b]	Emission factor[c]		Emission Factor Rating
	g/Mg	lb/ton	
Particulate[d]	137	.274	B
Sulfur oxides (as SO_2)[d,e]	146S	.292S	C
Nitrogen oxides (as NO_2)[f]	18	.036	D
Volatile organic compounds[f]	14	.028	D
Carbon monoxide[f]	19	.038	D
Polycyclic organic matter[f]	0.013	.000026	D
Aldehydes[f]	10	.020	D
Formaldehyde	0.077	.00015	D
2-Methylpropanal (isobutyraldehyde)	0.63	.0013	D
1-Butanal (n-butyraldehyde)	1.2	.0024	D
3-Methylbutanal (isovaleraldehyde)	8.3	.016	D

[a]Reference 16.
[b]Particulates, carbon monoxide, polycyclics, trace metals and hydrogen sulfide were observed in the mixer emissions at concentrations that were small relative to stack concentrations.
[c]Expressed as g/Mg and lb/ton of asphaltic concrete produced.
[d]Mean of 400 plant survey source test results.
[e]Reference 21. S = % sulfur in fuel. SO_2 may be attenuated >50% by adsorption on alkaline aggregate.
[f]Based on limited test data from the single asphaltic concrete plant described in Table 8.1-2.

Reference 16 reports mixer concentrations of SO_x, NO_x, VOC and ozone as less than certain values, so they may not be present at all, while particulates, carbon monoxide, polycyclics, trace metals and hydrogen sulfide were observed at concentrations that were small relative to stack amounts. Emissions from the mixer are thus best treated as fugitive.

The materials listed in Table 8.1-1 are discussed below. Factor ratings are listed for each material in the table. All emission factors are for controlled operation, based either on average industry practice shown by survey or on actual results of testing in a selected typical plant. The characteristics of this representative plant are given in Table 8.1-2.

TABLE 8.1-2. CHARACTERISTICS OF AN ASPHALTIC CONCRETE PLANT SELECTED FOR SAMPLING[a]

Parameter	Plant Sampled
Plant type	Conventional permanent batch plant
Production rate, Mg/hr (ton/hr)	160.3 ± 16% (177 ± 16%)
Mixer capacity, Mg (tons)	3.6 (4.0)
Primary collector	Cyclone
Secondary collector	Wet scrubber (venturi)
Fuel	Oil
Release agent	Fuel oil
Stack height, m (ft)	15.85 (52)

[a]Reference 16, Table 16.

The industrial survey showed that over 66 percent of operating hot mix asphalt plants use fuel oil for combustion. Possible sulfur oxide emissions from the stack were calculated assuming that all sulfur in the fuel oil is oxidized to SO_x. The amount of sulfur oxides actually released through the stack may be attenuated by water scrubbers or even by the aggregate itself, if limestone is being dried. No. 2 fuel oil has an average sulfur content of 0.22 percent.

Emission factors for nitrogen oxides, nonmethane volatile organics, carbon monoxide, polycyclic organic material and aldehydes

8.4 CALCIUM CARBIDE MANUFACTURING

8.4.1 General

Calcium carbide (CaC_2) is manufactured by heating a lime and carbon mixture to 2,000 to 2,100°C (3,632 to 3,812°F) in an electric arc furnace. At those temperatures, the lime is reduced by carbon to calcium carbide and carbon monoxide, according to the following reaction:

$$CaO + 3C \rightarrow CaC_2 + CO$$

Lime for the reaction is usually made by reducing limestone in a kiln at the plant site. The sources of carbon for the reaction are petroleum coke, metallurgical coke or anthracite coal. Because impurities in the furnace charge remain in the calcium carbide product, the lime should contain no more than 0.5 percent each of magnesium oxide, aluminum oxide and iron oxide, and 0.004 percent phosphorous. Also, the coke charge should be low in ash and sulfur. Analyses indicate that 0.2 to 1.0 percent ash and 5 to 6 percent sulfur are typical in petroleum coke. About 991 kilograms (2,185 lb) of lime, 683 kilograms (1,506 lb) of coke, and 17 to 20 kilograms (37 to 44 lb) of electrode paste are required to produce one megagram (2,205 lb) of calcium carbide.

The process for manufacturing calcium carbide is illustrated in Figure 8.4-1. Moisture is removed from coke in a coke dryer, while limestone is converted to lime in a lime kiln. Fines from coke drying and lime operations are removed and may be recycled. The two charge materials are then conveyed to an electric arc furnace, the primary piece of equipment used to produce calcium carbide. There are two basic types of electric arc furnaces, the open furnace, in which the carbon monoxide burns to carbon dioxide when it contacts the air above the charge, and the closed furnace, in which the gas is collected from the furnace and either used as fuel for other processes or flared. Electrode paste composed of coal tar pitch binder and

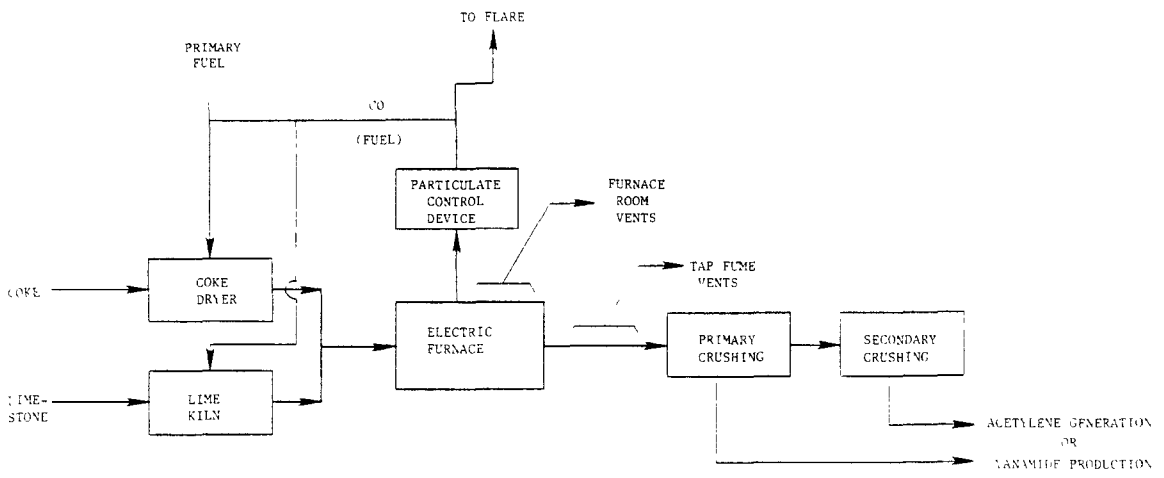

Figure 8.4-1. Calcium carbide manufacturing process.

anthracite coal is continuously fed into a steel casing where it is baked by heat from the electric arc furnace before introduction into the furnace. The baked electrode exits the steel casing just inside the furnace cover and is consumed in the calcium carbide production process. Molten calcium carbide is tapped continuously from the furnace into chill cars and is allowed to cool and solidify. Then, primary crushing of the solidified calcium carbide by jaw crushers is followed by secondary crushing and screening for size. To prevent explosion hazards from acetylene generated by reaction of calcium carbide with ambient moisture, crushing and screening operations may be performed in an air swept environment before the calcium carbide has completely cooled or may be carried out in an inert atmosphere. The calcium carbide product is used primarily in acetylene generation and also as a desulfurizer of iron.

8.4.2 Emissions and Controls

Emissions from calcium carbide manufacturing include particulate matter, sulfur oxides, carbon monoxide and hydrocarbons. Particulate matter is emitted from a variety of equipment and operations in the production of calcium carbide, including the coke dryer, lime kiln, electric furnace, tap fume vents, furnace room vents, primary and secondary crushers, and conveying equipment. (Lime kiln emission factors are presented in Section 8.15.) Particulate matter emitted from process sources such as the electric furnace are ducted to a particulate control device, usually fabric filters and wet scrubbers. Fugitive particulate matter from sources such as tapping operations, furnace room and conveyors is captured and sent to a particulate control device. The composition of the particulate matter emissions varies according to the specific equipment or operation, but the primary components are magnesium, calcium and carbon compounds. Sulfur oxides are emitted by the electric furnace from volatilization and oxidation of sulfur in the coke feed and by the coke dryer and lime kiln from fuel combustion. These process sources are not controlled specifically for sulfur oxide emissions. Carbon monoxide is a byproduct of calcium carbide formation in the electric furnace. Carbon monoxide emissions to the atmosphere are usually negligible. In open furnaces, carbon monoxide is oxidized to carbon dioxide, thus eliminating carbon monoxide emissions. In closed furnaces, a portion of the generated carbon monoxide is burned in the flames surrounding the furnace charge holes, and the remaining carbon monoxide is used as fuel for other processes or is flared. The only potential source of hydrocarbon emissions from the manufacture of calcium carbide is the coal tar pitch binder in the furnace electrode paste. Since the maximum volatiles content in the electrode paste is about 18 percent, the electrode paste represents only a small potential source of hydrocarbon emissions. In closed furnaces, actual hydrocarbon emissions from consumption of electrode paste typically are negligible due to high furnace operating temperature and flames surrounding the furnace charge holes. Hydrocarbon emissions from open furnaces are also expected to be negligible because of high furnace operating temperature and the presence of excess oxygen above the furnace.

Table 8.4-1 gives controlled and uncontrolled emission factors for various processes in the manufacture of calcium carbide. Controlled factors are based on test data and permitted emissions for operations with the fabric filters and wet scrubbers that are typically used to control particulate emissions in calcium carbide manufacturing.

TABLE 8.4-1. EMISSION FACTORS FOR CALCIUM CARBIDE MANUFACTURING PLANTS[a]

Process	Particulate Matter[b] Uncontrolled	Particulate Matter[b] Controlled[c]	Sulfur Oxides[d]	Emission Factor Rating
Electric furnace main stack[e]	12 (24)	0.39 (0.78)	1.5 (3.0)	B, C
Coke dryer	1.0 (2.0)	0.13 (0.26)	1.5 (3.0)	C
Tap fume vents	ND	0.07 (0.14)	0	C
Furnace room vents	13 (26)	0.07 (0.14)	0	C
Primary and secondary crushing	ND	0.57 (1.14)	0	C
Circular charging conveyor	ND	0.17 (0.34)	0	C

[a]Factors are in kg/Mg (lb/ton) of calcium carbide produced. ND - No data.

[b]Electric furnace: primarily magnesium compounds with small amounts of calcium, carbon, aluminum, iron, silicon compounds. Coke dryer: carbon compounds. Tap fume vents and furnace room vents: carbon, calcium, magnesium, silicon, iron compounds. Primary and secondary crushing: calcium carbide. Circular charging conveyor: lime, coke.

[c]Based on emissions data and not on assumed control efficiencies.

[d]Uncontrolled.

[e]Rating is B for particulate matter emission factor, C for sulfur oxides. Factors applicable to open furnaces using petroleum coke.

References for Section 8.4

1. "Permits to Operate: Airco Carbide, Louisville, Kentucky", Jefferson County Air Pollution Control District, Louisville, KY, December 16, 1980.

2. "Manufacturing or Processing Operations: Airco Carbide, Louisville, Kentucky", Jefferson County Air Pollution Control District, Louisville, KY, September 1975.

3. Written communication from A. J. Miles, Radian Corp., Durham, NC, to Douglas Cook, U. S. Environmental Protection Agency, Atlanta, GA, August 20, 1981.

4. "Furnace Offgas Emissions Survey: Airco Carbide, Louisville, Kentucky", Environmental Consultants, Inc., Clarksville, IN, March 17, 1975.

5. J. W. Frye, "Calcium Carbide Furnace Operation", Electric Furnace Conference Proceedings, American Institute of Mechanical Engineers, New York, December 9-11, 1970.

6. The Louisville Air Pollution Study, U. S. Department of Health and Human Services, Robert A. Taft Center, Cincinnati, OH, 1961.

7. R. N. Shreve and J. A. Brink, Jr., Chemical Process Industries, Fourth Edition, McGraw Hill Company, New York, 1977.

8. J. H. Stuever, "Particulate Emissions - Electric Carbide Furnace Test Report: Midwest Carbide, Pryor, Oklahoma", Stuever and Associates, Oklahoma City, OK, April 1978.

9. L. Thomsen, "Particulate Emissions Test Report: Midwest Carbide, Keokuk, Iowa", Beling Consultants, Inc., Moline, IL, July 1, 1980.

10. D. M. Kirkpatrick, "Acetylene from Calcium Carbide Is an Alternate Feedstock Route", Oil and Gas Journal, June 7, 1976.

11. L. Clarke and R. L. Davidson, Manual for Process Engineering Calculations, Second Edition, McGraw-Hill Company, New York, 1962.

11.2.2 AGRICULTURAL TILLING

11.2.2.1 General

The two universal objectives of agricultural tilling are the creation of the desired soil structure to be used as the crop seedbed and the eradication of weeds. Plowing, the most common method of tillage, consists of some form of cutting loose, granulating and inverting the soil, and turning under the organic litter. Implements which loosen the soil and cut off the weeds but which leave the surface trash in place have recently become more popular for tilling in dryland farming areas.

During a tilling operation, dust particles from the loosening and pulverizing of the soil are injected into the atmosphere as the soil is dropped to the surface. Dust emissions are greatest during periods of dry soil and during final seedbed preparation.

11.2.2.2 Emissions and Correction Parameters

The quantity of dust from agricultural tilling is proportional to the area of land tilled, and to the surface soil texture and moisture content of the particular field being tilled.

Dust emissions from agricultural tilling have been found to vary directly with the silt content (defined as particles <75 micrometers in diameter) of the surface soil depth (0 to 10 centimeters [0 to 4 inches]). The soil silt content is determined by measuring the proportion of dry soil that passes a 200 mesh screen, using ASTM-C-136 method. Note that this definition of silt differs from that customarily used by soil scientists, for whom silt is particles from 2 to 50 micrometers in diameter.

Field measurements[2] indicate that dust emissions from agricultural tilling are not significantly related to surface soil moisture, although limited earlier data had suggested such a dependence.[1] This is now believed to reflect the fact that most tilling is performed under dry soil conditions, as were the majority of the field tests.[1-2]

Available test data indicate no substantial dependence of emissions on the type of tillage implement, if operating at a typical speed (8 to 10 kilometers per hour [5 to 6 miles per hour]).[1-2]

11.2.2.3 Predictive Emission Factor Equation

The quantity of dust emissions from agricultural tilling, per acre of land tilled, may be estimated with a rating of A or B (see below) using the following empirical expression[2]:

$$E = k(5.38)(s)^{0.6} \quad \text{(kg/hectare)} \qquad (1)$$

$$E = k(4.80)(s)^{0.6} \quad \text{(lb/acre)}$$

where: E = emission factor
k = particle size multipler (dimensionless)
s = silt content of surface soil (%)

The particle size multiplier (k) in the equation varies with aerodynamic particle size range as follows:

Aerodynamic Particle Size Multiplier for Equation 1

Total particulate	< 30 μm	< 15 μm	< 10 μm	< 5 μm	< 2.5 μm
1.0	0.33	0.25	0.21	0.15	0.10

Equation 1 is rated A if used to estimate total particulate emissions, and B if used for a specific particle size range. The equation retains its assigned quality rating if applied within the range of surface soil silt content (1.7 to 88 percent) that was tested in developing the equation. Also, to retain the quality rating of Equation 1 applied to a specific agricultural field, it is necessary to obtain a reliable silt value(s) for that field. The sampling and analysis procedures for determining agricultural silt content are given in Reference 2. In the event that a site specific value for silt content cannot be obtained, the mean value of 18 percent may be used, but the quality rating of the equation is reduced by one level.

11.2.2.4 Control Methods[3]

In general, control methods are not applied to reduce emissions from agricultural tilling. Irrigation of fields before plowing will reduce emissions, but in many cases, this practice would make the soil unworkable and would adversely affect the plowed soil's characteristics. Control methods for agricultural activities are aimed primarily at reduction of emissions from wind erosion through such practices as continuous cropping, stubble mulching, strip cropping, applying limited irrigation to fallow fields, building windbreaks, and using chemical stabilizers. No data are available to indicate the effects of these or other control methods on agricultural tilling, but as a practical matter, it may be assumed that emission reductions are not significant.

References for Section 11.2.2

1. C. Cowherd, Jr., et al., Development of Emission Factors for Fugitive Dust Sources, EPA-450/3-74-037, U. S. Environmental Protection Agency, Research Triangle Park, NC, June 1974.

2. T. A. Cuscino, Jr., et al., The Role of Agricultural Practices in Fugitive Dust Emissions, California Air Resources Board, Sacramento, CA, June 1981.

3. G. A Jutze, et al., Investigation of Fugitive Dust - Sources Emissions And Control, EPA-450/3-74-036a, U. S. Environmental Protection Agency, Research Triangle Park, NC, June 1974.

TECHNICAL RE...
(Please read Instructions on the reverse before completing)

1. REPORT NO. AP-42, Supplement 15	2.	3. RECIPIENT'S ACCESSION NO.
TITLE AND SUBTITLE Supplement 15 to Compilation of Air Pollutant Emission Factors, AP-42		5. REPORT DATE January 1984
		6. PERFORMING ORGANIZATION CODE
7. AUTHOR(S)		8. PERFORMING ORGANIZATION REPORT NO.
9. PERFORMING ORGANIZATION NAME AND ADDRESS U. S. Environmental Protection Agency Office Of Air And Radiation Office Of Air Quality Planning And Standards Research Triangle, NC 27711		10. PROGRAM ELEMENT NO.
		11. CONTRACT/GRANT NO.
12. SPONSORING AGENCY NAME AND ADDRESS		13. TYPE OF REPORT AND PERIOD COVERED
		14. SPONSORING AGENCY CODE

15. SUPPLEMENTARY NOTES

EPA Editor: Whitmel M. Joyner

16. ABSTRACT

In this Supplement for AP-42, new, revised or reformatted emissions data are presented for Stationary Large Bore And Dual Fuel Engines; General Industrial Surface Coating; Can Coating; Magnet Wire Coating; Other Metal Coating; Flat Wood Interior Panel Coating; Fabric Coating; Tank And Drum Cleaning; Fish Processing; Ammonium Nitrate; Urea; Primary Aluminum Production; Primary Copper Smelting; Asphaltic Concrete Plants; Calcium Carbide Manufacturing; and Agricultural Tilling.

Region V, Library
230 South Dearborn Street
Chicago, Ill...

17. KEY WORDS AND DOCUMENT ANALYSIS

a. DESCRIPTORS	b. IDENTIFIERS/OPEN ENDED TERMS	c. COSATI Field/Group
Fuel Combustion Emissions Emission Factors Stationary Sources		

18. DISTRIBUTION STATEMENT	19. SECURITY CLASS (This Report)	21. NO. OF PAGES 92
	20. SECURITY CLASS (This page)	22. PRICE

EPA Form 2220-1 (Rev. 4-77) PREVIOUS EDITION IS OBSOLETE