United States
Environmental Protection
Agency

Office of Water
Regulations and Standards
Washington DC 20460

EPA-440/2-82-007
November 1982

Water

EPA

Economic Impact Analysis of Effluent Limitations and Standards for the Petroleum Refining Industry

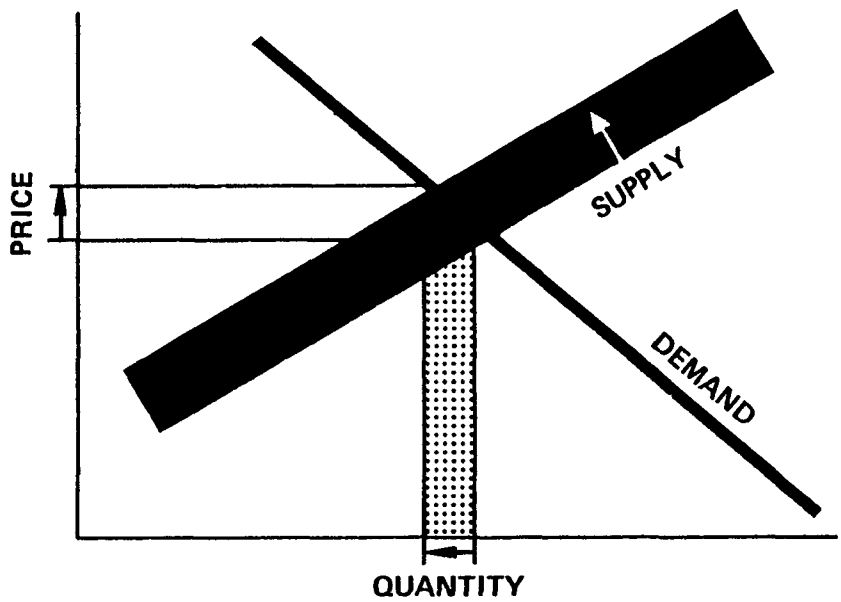

This document is available from the National Technical Information Service, 5282 Port Royal Road, Springfield, Virginia 22161.

ECONOMIC IMPACT ANALYSIS OF EFFLUENT LIMITATIONS AND STANDARDS FOR THE PETROLEUM REFINING INDUSTRY

PREPARED FOR
U.S. ENVIRONMENTAL PROTECTION AGENCY
OFFICE OF WATER REGULATIONS AND STANDARDS,
OFFICE OF ANALYSIS AND EVALUATION

U.S. Environmental Protection Agency
Chicago, Illinois

NOVEMBER 1982

U.S. Environmental Protection Agency

This document is an economic impact assessment of the recently-issued effluent guidelines. The report should be directed to the staff responsible for writing industrial discharge permits. The report includes detailed information on the costs and economic impacts of various treatment technologies. It is should be helpful to the permit writer in evaluating the economic impacts on an industrial facility that must comply with BAT limitations or water quality standards.

If you have any questions about this report, or if you would like additional information on the economic impact of the regulation, please contact the Economic Analysis Staff in the Office of Water Regulations and Standards at EPA Headquarters:

401 M Street, S.W. (WH-586)
Washington, D.C. 20460
(202) 382-5397

The staff economist for this project is John Kukulka (202/382-5388).

PREFACE

This document is a contractor's study prepared for the Office of Water Regulations and Standards of the Environmental Protection Agency (EPA). The purpose of the study is to analyze the economic impact which could result from the application of effluent standards and limitations issued under Sections 301, 304, 306 and 307 of the Clean Water Act to the petroleum refining industry.

The study supplements the technical study (EPA Development Document) supporting the issuance of these regulations. The Development Document surveys existing and potential waste treatment control methods and technology within particular industrial source categories and supports certain standards and limitations based upon an analysis of the feasibility of these standards in accordance with the requirements of the Clean Water Act. Presented in the Development Document are the investment and operating costs associated with various control and treatment technologies. The attached document supplements this analysis by estimating the broader economic effects which might result from the application of various control methods and technologies. This study investigates the effect in terms of product price increases, effects upon employment and the continued viability of affected plants, effects upon foreign trade and other competitive effects.

The study has been prepared with the supervision and review of the Office of Water Regulations and Standards of EPA. This report was submitted in fulfillment of Contract No. 68-01-6341 by Sobotka & Company, Inc. The work on this analysis was completed August 1982.

TABLE OF CONTENTS

		Page
Chapter I	EXECUTIVE SUMMARY	
	A. Introduction	I-1
	B. Structure of the Industry	I-1
	C. Methodology	I-3
	D. Costs of Conforming to Revised Guidelines and New Source Standards	I-3
	E. Impact Analysis	I-6
	F. Limitations of the Analysis	I-8
Chapter II	STRUCTURE OF THE PETROLEUM REFINING INDUSTRY	
	A. Principal Statistics of the Industry	II-1
	B. Coverage of the Analysis	II-3
	C. Economic and Financial Structure of the Industry	II-3
Chapter III	METHODOLOGY	
	A. Price Analysis	III-1
	B. Quantity Analysis	III-2
Chapter IV	COSTS OF CONFORMING PETROLEUM REFINERIES TO REVISED BATEA GUIDELINES, NEW SOURCE PERFORMANCE STANDARDS, PRETREATMENT GUIDELINES, AND PRETREATMENT STANDARDS FOR NEW SOURCES	
	A. Existing Sources	IV-1
	B. New Sources	IV-4
Chapter V	ECONOMIC IMPACT ANALYSIS WITH HIGH LEVEL OF PROTECTION AGAINST PETROLEUM PRODUCT IMPORTS	
	A. Price Effects of Revised Guidelines	V-1
	B. Financial Effects	V-2
	C. Production Effects	V-3
	D. Employment Effects	V-4
	E. Community and Balance of Trade Effects	V-4
Chapter VI	ECONOMIC IMPACT ANALYSIS WITH LOW LEVEL OF PROTECTION AGAINST PETROLEUM PRODUCT IMPORTS	
	A. Price Effects	VI-1
	B. Financial Effects	VI-1
	C. Production Effects	VI-2
	D. Summary of Economic Impacts of Revised Guidelines on Existing Plants	VI-18
	E. Impacts on New Plants	VI-19
Chapter VII	LIMITATIONS OF THE ANALYSIS	

TABLE OF CONTENTS (continued)

		Page
Appendix A	PETROLEUM REFINING PROCESSES AND THE REFINING INDUSTRY	
	A. Types of Refineries	A-1
	B. Location of Refineries	A-8
	C. Financial Structure of the Industry	A-10
	D. Refining Industry Growth	A-11
	E. Types of Refining Processes	A-13

LIST OF EXHIBITS

		Page
Exhibit I.1	SUMMARY OF COSTS TO PETROLEUM REFINERIES OF CONFORMING TO REVISED EFFLUENT DISCHARGE STANDARDS	I-4
Exhibit I.2	COSTS TO A NEW PETROLEUM REFINERY OF CONFORMING TO REVISED EFFLUENT DISCHARGE STANDARDS	I-5
Exhibit II.1	SUMMARY OF RESPONSES TO 1976 PETROLEUM REFINING INDUSTRY SECTION 308 QUESTIONNAIRE	II-4
Exhibit II.2	THE EFFECT OF PRODUCT IMPORT TARIFFS ON CONSUMPTION, DOMESTIC MANUFACTURE AND IMPORTS OF PETROLEUM PRODUCTS	II-13
Exhibit IV.1	COSTS TO DIRECTLY DISCHARGING PETROLEUM REFINERIES OF CONFORMING TO REVISED BATEA GUIDELINES	IV-6
Exhibit IV.2	COSTS TO INDIRECTLY DISCHARGING PETROLEUM REFINERIES OF CONFORMING TO REVISED BATEA GUIDELINES	IV-16
Exhibit IV.3	SUMMARY OF COSTS TO PETROLEUM REFINERIES OF CONFORMING TO REVISED EFFLUENT DISCHARGE GUIDELINES	IV-19
Exhibit IV.4	COSTS TO A NEW PETROLEUM REFINERY OF CONFORMING TO REVISED EFFLUENT DISCHARGE GUIDELINES	IV-20
Exhibit VI.1	EXISTING REFINERIES WITH ANNUALIZED COST TO CONFORM TO REVISED GUIDELINES OF MORE THAN 4.1 CENTS PER BARREL OF CRUDE OIL PROCESSED	VI-4
Exhibit VI.2	COMPARISON OF PROCESS UNIT VALUES VERSUS COST TO CONFORM TO REVISED GUIDELINES	VI-11
Exhibit A.1	FLOW DIAGRAM FOR TOPPING REFINERY PROCESSING LOW SULFUR CRUDE OIL	A-2
Exhibit A.2	FLOW DIAGRAM FOR HYDROSKIMMING REFINERY PROCESSING LOW SULFUR CRUDE OIL	A-3
Exhibit A.3	FLOW DIAGRAM FOR FUELS REFINERY PROCESSING LOW SULFUR CRUDE OIL	A-4
Exhibit A.4	FLOW DIAGRAM FOR HIGH CONVERSION REFINERY PROCESSING LOW SULFUR CRUDE OIL	A-5
Exhibit A.5	U.S. REFINERY CRUDE DISTILLATION CAPACITY AND OPERATIONAL ABILITY MATRIX	A-7
Exhibit A.6	GEOGRAPHIC DISTRIBUTION OF REFINERIES AND REFINERY CAPACITY	A-9
Exhibit A.7	FUNCTIONAL CHARACTERIZATION OF PETROLEUM REFINERY PROCESSES	A-14

Chapter I
EXECUTIVE SUMMARY

A. Introduction

The Environmental Protection Agency (EPA) is in the process of developing and issuing revised "best available technology economically achievable" (BATEA) limitations and "pretreatment" standards for aqueous effluents discharged by existing petroleum refineries. It is also issuing revised new source standards for future refineries. The standards and limitations will be issued in accordance with Sections 301, 304, 306 and 307 of the Clean Water Act. The purpose of this study was to analyze the economic impacts that could result from the implementation of revised limitations and standards.

This study was restricted to 212 U.S. refineries that operated in 1976 and were expected to discharge aqueous effluents in 1984 into receiving bodies or publicly/jointly owned treatment plants. (Fifty refineries will discharge no effluents; twenty-one, including eight known dischargers, did not respond to EPA's Section 308 Survey Questionnaire and were not included in the analysis.)

Most of the data underlying the analyses in this report were taken from a development document and a cost manual prepared by EPA. These publications include information on the size and process unit configuration of each discharging refinery and on the estimated capital and operating costs that may be required to bring each refinery into conformance with revised guidelines.

B. Structure of the Industry

The petroleum refining industry had been subject to a set of raw material and refined product price controls that severely distorted competition. This study assumed that these controls would have lapsed by 1984 when the revised

guidelines will become effective. In fact, these controls were terminated by presidential decree on January 28, 1981.

In the absence of price controls, the market for refined petroleum products is competitive between domestic and foreign plants. Product prices are determined by the marginal costs of the highest cost supply needed to clear the market. For several reasons, e.g., preferentially-priced raw materials and/or fuel, advantageous tax treatment, less severe environmental controls, less severe occupational safety and health requirements, etc., many foreign refineries face lower costs than do U.S. plants. So the maintenance of a domestic refinery industry of roughly the same size that existed in 1978 would have required that some protection be afforded against unrestricted competition from imported products.

For the purpose of economic analysis, it is useful to segregate the industry on the basis of four characteristics:

B.1 Disposition of Aqueous Effluent. Refineries discharge either directly or indirectly to publicly or jointly owned treatment plants, or not at all.

B.2 New or Existing Source of Effluent.

B.3 Refinery Configuration. Configuration is a good proxy for value added by refineries. The more highly configured a refinery is, the greater will be the value added per unit of crude oil processed.

B.4 Geographical Location. Because transportation is an important component of delivered product cost, the location of a refinery relative to its crude oil supply and its product markets, and to its competition, has a significant impact on its value.

C. Methodology

The price analysis, described below, was simple. For the quantity analysis, the cost estimates were restated as annualized costs per unit volume of crude oil processed. Twenty-seven refineries were found to be facing costs to conform to revised guidelines which exceeded 4.1 cents per (42 gallon) barrel of crude oil processed. For each of these the cost to conform was compared to the value of the refinery. Value was defined from an investors' viewpoint: the present value of future cash flows. Value estimates were derived for each of two premised future levels of federal protection against petroleum product imports: a level high enough to encourage construction of new capacity, and a lower level adequate to preserve the industry at about its current capacity. For each level of protection, value estimates were developed from factual information about refinery process unit costs, historic product manufacturing margins, and transportation costs for raw materials and refined products.

D. Costs of Conforming to Revised Guidelines and New Source Standards

Costs of conforming existing refineries to revised guidelines (BAT and PSES) will apparently range from zero to 42 cents per barrel of crude oil processed, i.e., from zero to about 1.1 cents per gallon of refined product manufactured. Costs of conforming new source refinery capacity to revised new source standards (NSPS and PSNS) will apparently range from zero to 6.2 cents per barrel crude oil processed, i.e., from zero to about 0.2 cents per gallon of refined product manufactured.

The cost data are summarized in Exhibits I.1 and I.2.

Exhibit I.1

SUMMARY OF COSTS TO PETROLEUM REFINERIES
OF CONFORMING TO REVISED EFFLUENT DISCHARGE STANDARDS

	Crude Oil Distillation Capacity	Capital Costs	Operating Costs	Annualized Costs	
				Total	Unit
	(1000 bpd)	(1000 $)	(1000 $/year)	(1000 $/year)	(cents/barrel)
DIRECT DISCHARGERS					
BAT-					
Level 1	14,142	19,281	3,678	7,730	0.2
Level 2	14,142	112,956	24,985	48,703	1.0
INDIRECT DISCHARGERS					
PSES-					
Option 1	2,402	9,591	3,163	5,175	0.7
Option 2	2,402	84,807	14,432	35,267	4.1

According to the Development Document:

BAT-Level 1 is current BPT quality plus reduction in effluent flow to 73% of "model" flow,

BAT-Level 2 is the same flow reduction plus addition of powdered activated carbon to the biological treater,

PSES-Option 1 is current PSES quality plus removal of chromium from cooling tower blowdown, and

PSES-Option 2 is flow reduction, equalization, biological treatment, and filtration of total effluent.

Exhibit I.2

COSTS TO A NEW PETROLEUM REFINERY*
OF CONFORMING TO REVISED EFFLUENT DISCHARGE STANDARDS

	Capital Costs	Operating Costs	Annualized Costs	
			Total	Unit*
	(1000 $)	(1000 $/year)	(1000 $/year)	(cents/barrel)
DIRECT DISCHARGER (NSPS)§				
Level 1	0	0	0	0
Level 2	75	218	234	0.4
INDIRECT DISCHARGER (PSNS)†				
Option 1	260	140	195	0.3
Option 2	5,800	2,230	3,450	5.5
NO AQUEOUS DISCHARGE§	9,500	1,880	3,875	6.2

* 200,000 barrels per stream day capacity, equipped for high conversion.

§ Costs are additional above current NSPS (BADT).

† Costs are additional above current pretreatment standards for existing refineries.

According to the Development Document:

NSPS-Level 1 corresponds to current NSPS (BADT) regulations,

NSPS-Level 2 adds powdered activated carbon to the Level 1 biological treater,

PSNS-Option 1 is current PSES quality plus removal of chromium from cooling tower blowdown, and

PSNS-Option 2 is flow reduction, equalization, biological treatment and filtration of total effluent.

E. Impact Analysis

E.1 Price Impacts. It was discussed above that market-clearing prices of petroleum products are determined by either the long-run costs of products manufactured domestically or the short-run cost of imports plus tariff. Under a high level of federal protection against imports, the revised new source standards would increase product prices by zero to 0.15 cents per gallon. Under a low level of protection, prices will be determined by the costs of imports (including tariff costs). So revised guidelines would have no price impact.

E.2 Financial Impacts. With a high level of federal protection, the financial effect for existing refineries of revised new source standards and revised guidelines would range from a net cost of 81 million dollars per year to a net benefit of 327 million dollars per year. The range exists because there are five possible new source standards that might be price-determining, and four combinations of revised direct/indirect guidelines that may be imposed. Under a low level of federal protection, and depending on which combination of revised direct/indirect guidelines was imposed, the costs to be absorbed by existing refineries would range from 13 million to 81 million dollars per year. The larger number represents an average cost increase for the industry of about 0.1 percent, or roughly one percent of value added by refining.

At the time of this study, petroleum refineries faced major business uncertainties. The size of the "small refiner bias" in the crude oil entitlements program was under review; price controls on most products had been allowed to lapse, and further decontrol was under study; crude oil prices were being increased to world levels by price decontrol; the long range level of protection against imports to be afforded U.S. refineries was unknown, etc. Compared to the financial implications of these uncertainties, the estimates of the costs of conforming to revised guidelines were inconsequential.

E.3 Production Impacts. Twenty-seven existing refineries were estimated to face conformance costs exceeding 0.1 cents per gallon of product manufactured.

Under a high level of federal protection all of these were expected to be willing to undertake effluent treating revisions and to continue operating. Under a low level of federal protection, three refineries were identified as apparently not worth the cost of conforming to revised Option 2 pretreatment standards for existing sources (PSES) guidelines. These refineries accounted for only 0.1 percent of industry capacity, so the loss would have no effect on overall industry outturn.

E.4 Employment Impacts. Under a high level of federal protection, revised standards and guidelines would lead to the following increases in industry employment:

	New Jobs
Existing Direct Dischargers	
Level 1	40
Level 2	600
Existing Indirect Dischargers	
Option 1	10
Option 2	250

New employment could range from 50 to 750 jobs, depending on the combination of Level/Option chosen for implementation.

Under a low level of protection, total industry employment would increase by about 50 people if Level 1 and Option 1 are implemented. If Level 2 and Option 2 are implemented instead, employment in surviving refineries would increase by about 850 jobs; but 100 to 150 jobs would be lost at the three refineries which shut down.

E.5 Community Effects. The three refineries that may shut down are all small employers located in or near metropolitan areas. Hence, no community impacts are expected if the plants shut down.

E.6 Balance of Trade Effects. There apparently will be no balance of trade effects of revised guidelines.

F. Limitations of the Analysis

The analysis is based entirely on costs developed by the Effluent Guidelines Division of EPA. The costs are based on a statistical analysis of 1976 effluent flow data. Also, land costs were assumed to be negligible for all refineries.

Existing federal policy currently does not substantially protect domestic refineries against low priced imports of petroleum products. The lowest level of protection assumed in this study was a level that would maintain domestic refining industry throughput at roughly its 1978 level. But in 1978, there was no clear indication of what the refinery protection policy would eventually be, if any, or when it might become effective.

At the time this study was made, it was not possible to foresee the dramatic changes that eventually took place in the world and the U.S. petroleum market places. Large price increases significantly reduced consumption. In January 1981, all U.S. petroleum price controls were removed, small refiner subsidies were rescinded and the U.S. industry was given essentially no tariff protection. U.S refining utilization decreased from 89.4 percent of capacity in 1977 to below 70 percent in 1981. More than fifty U.S. refineries have discontinued operations since decontrol.

If the economic impact analysis were redone in the context of the current economic environment, some changes would be noted. But the impacts on the existing industry (BAT and PSES) would be small since compliance costs represent such a small fraction of value added. There would be essentially no construction of new refining sources. Market prices for petroleum products would be determined by the costs of imports, so there would be no price effects of revised guidelines applicable to U.S. plants. Therefore, BAT and PSES compliance costs would have to be absorbed by existing refineries.

Even though current forecasts indicate that little construction of new refining sources will take place, it can be concluded that the NSPS or PSNS standards considered in this analysis would have negligible impact on the economic viability of new plants. A new refinery of the type noted in Exhibit I.2 would have to generate a net cash flow before taxes (product revenues minus the sum of raw material costs plus cash operating expenses) of roughly $150 million dollars per year to be commercially feasible. In this context, the annual costs of even the more severe treatment options considered for new sources - PSNS Option 2 or zero discharge - represent roughly two percent of the cash flow. Relative costs of this magnitude are too small to influence overall project economics.

Chapter II

STRUCTURE OF THE PETROLEUM REFINING INDUSTRY

(NOTE: The material contained in this chapter is updated in Appendix A.)

A. Principal Statistics of the Industry

As of January 1, 1978, the petroleum refining industry in the United States and its possessions consisted of about 280 plants, owned by about 150 firms, and located in 41 of the 50 states, Guam, Puerto Rico, and the Virgin Islands.[1] Industry capacity for processing crude oil was about 17 million barrels (715 million gallons) per calendar day.[2] The refineries had a replacement value in excess of 40 billion dollars. The industry employed about 160,000 persons in 1977.[3]

The bulk of refining is done by firms which also market refined products or produce crude oil, or do both. In most firms the refining portion of the business is not the major activity. Refinery investment is less than 15 percent of total investment in the domestic oil industry.[4]

U.S. refineries vary in capacity by over three orders of magnitude - from 500 to 730,000 barrels crude oil per day.[5] The degree of refinery complexity (measured by total refinery replacement value per barrel of crude oil distillation capacity) varies between refineries by a factor of fifteen.[6] Consequently,

---

[1] U.S. Department of Energy, Petroleum Refineries in the United States and Puerto Rico, January 1, 1978, July 1978.

[2] Ibid.

[3] American Petroleum Institute, Basic Petroleum Data Book, Petroleum Industry Statistics, October 1975 and later years.

[4] Ibid.

[5] U.S. Department of Energy, op. cit.

[6] Sobotka & Co., Inc., Capital and Operating Costs for Grass Roots Petroleum Refineries with Several Different Process Unit Configurations, Department of Energy Contract EJ-78-C-01-2834, April 12, 1979.

the replacement value of refineries ranges from roughly one million dollars to perhaps two billion dollars.

The delivered price of crude oil to U.S. refineries in December 1978 varied from about six dollars per barrel for domestic "lower tier" crude oil to about sixteen dollars per barrel for imported low-sulfur crude oil.[1] The weighted average composite price was thirteen dollars per barrel (thirty-one cents per gallon). It was anticipated that imports would account for about forty-three percent of crude oil intake by U.S. refineries in 1979 and about ten percent of product consumption.[2]

Average wholesale prices for refined petroleum fuel products in December 1978 were:[3]

Motor gasoline	42	cents per gallon
Kerosene	39.5	" " "
Distillate fuel oil	38	" " "
Residual fuel oil	25	" " "

Average product yields from U.S. refineries during 1977 were:[4]

	Percent of Crude Oil Processed
Gasoline	43.4
Jet fuel and kerosene	7.8
Distillate fuel oil	22.4
Residual fuel oil	12.0
Petrochemical feedstocks	3.6
Liquefied gases	2.4
Asphalt	3.0
Lubricants	1.2
All other	4.2
	100.0

---

[1] Chase Manhattan Bank, The Petroleum Situation - February 1979.

[2] Oil and Gas Journal, May 14, 1979, p. 86.

[3] Chase Manhattan Bank, op. cit.

[4] Department of Energy, Crude Petroleum, Petroleum Products, and Natural Gas Liquids: 1977, DOE/EIA - 0108/77, December 8, 1978.

Not all domestic gasoline was manufactured from crude oil. Roughly ten percent was supplied predominantly by natural gas liquids.[1] Also, natural gas processing plants supplied much more liquefied gases than did refineries.

B. Coverage of the Analysis

The refineries for which revised BAT guidelines or revised pretreatment guidelines costs were derived are those which answered a survey questionnaire issued under authority of Section 308 of Public Law 92-217. A total of 299 questionnaires were issued; responses are summarized in Exhibit II.1.

C. Economic and Financial Structure of the Industry

Revised effluent guidelines require compliance by July 1, 1984. Consequently, the economic structure of the industry in 1978 or 1979 is not necessarily relevent to the impact analysis. Rather, the structure in 1984 as it would be without revised guidelines is the appropriate base for analysis. The 1984 structure was estimated to be the result of five years of endogenous and exogenous influences on the 1978-79 structure of the industry.

The financial status of the industry in 1978 is not a good base from which to forecast the 1984 status because then-current conditions will not exist in 1984. At the time that this analysis was performed, the industry was subject to price controls and allocation rules for both raw materials and refined products. Product price controls had been in effect since 1971, and crude oil price controls and allocations rules since 1973-74. The controls worked in two directions. On the one hand, the costs of raw materials to U.S. refineries were lower than the costs faced by essentially all of the rest of the free world non-OPEC refiners. On the other hand, product prices in the United States were controlled at levels lower than in most of the rest of the

---

[1] Ibid.

Exhibit II.1

SUMMARY OF RESPONSES TO
1976 PETROLEUM REFINING INDUSTRY SECTION 308 QUESTIONNAIRE

Forecast 1984 Waste Water Discharge Mode	Number of Refineries	Reported 1976 Crude Oil Processing Capacity (1000 bpd)
No waste water discharge	50	846.3
Direct discharge to receiving body	165	14,141.8
Indirect discharge to publicly or jointly owned treatment plants	47	2,401.5
Facility not refinery	12	--
Refinery did not operate in 1976	4	--
No response	21*	219.0§
	299†	17,389.6

* Includes nine with known discharge modes - 6 indirect, 1 direct, 1 both direct and indirect, 1 zero.

§ Estimated.

† Includes all refineries reported by the Bureau of Mines as existing in 1976.

world. The balance of this chapter is devoted to developing a reasonable estimate of the structure of the industry in 1984.

C.1 Exogenous Economic Factors. The legislation which established crude oil and product price controls and allocations was scheduled to lapse before 1984. Crude oil price controls were lifted in 1981. The prices of several major product classes, notably distillate fuel oil, had already been decontrolled in 1979. Motor gasoline was the only significant product still controlled in 1979. Based on the foregoing, it was assumed that the markets for crude oil and for refined petroleum products in 1984 will not be subject to price controls.

The quality of some refined products was forecast to change between 1979 and 1984. The predominant change was expected in gasoline. By 1984, at least three-fourths of motor gasoline will not contain any lead anti-knock additive, whereas in 1978, about one-third of gasoline was unleaded.[1] In addition, the average sulfur content of fuel oils was expected to decrease steadily in response to State Implementation Plans for sulfur dioxide emissions from existing facilities and new source performance standards for new facilities. At the same time, the average sulfur content of crude oils available to U.S. refineries was expected to increase. Both Alaskan North Slope and Mexican Reforma crude oils are higher than average in sulfur, as are most Middle Eastern crude oils. The effect of these quality trends is to increase the cost of manufacturing refined petroleum products.

The structure of U.S. domestic demand was also expected to change from 1979 to 1984.[2] It had been widely forecast that, because of federally mandated efficiency rules, domestic gasoline consumption would reach a peak around 1980 and stay at that level for four to five years before resuming growth. Conversely, the consumption of distillate fuel oil was forecast to increase slowly

---

[1] Hydrocarbon Processing, April 1979, p. 13.

[2] Projections of Energy Supply and Demand and Their Impacts, Annual Report to Congress, 1977, Volume II, Energy Information Administration, April 1978, p. 115.

rather than to follow the pattern of gasoline. It was thought that domestic manufacture of residual fuel oil might grow even if consumption were to stagnate, since a large fraction of supply was imported, and could therefore be cut back in favor of domestic production. In reality, the large petroleum price increases which took place in 1979/1980 caused consumption of all products to fall much faster than was premised for this analysis.

It was assumed that as current natural gas price controls and allocations lapsed, energy consumed by refineries (except purchased electricity) would come to cost about the same per BTU, regardless of its form. This was not yet the case in 1979, because some refineries had a cost advantage by being able to use as plant fuel natural gas which was contracted several years earlier at low prices, or was priced controlled.

Outside the U.S., it was forecast that OPEC would continue as an effective cartel, maintaining crude oil prices at the 1979 real price or higher. Additionally, because all OECD countries were reducing the allowable sulfur content of fuel oils,[1] and low-sulfur crude oil reserves accounted for only about one-fifth of total free world reserves,[2] low-sulfur crude oils were commanding premiums more than justified by the costs of desulfurization. Consequently, substantial construction of fuel oil desulfurization facilities was expected.[3] It was reasonable to assume that the price difference between high-sulfur and low-sulfur crude oils would eventually reach an equilibrium which would reflect the long run full cost of desulfurization. That is, the difference between high-sulfur and low-sulfur crude oil prices would be such that a refinery owner would be indifferent between two options: purchasing high-priced low-sulfur crude oil, or purchasing low-priced high-sulfur crude oil and installing desulfurization equipment.

---

[1] Oil and Gas Journal, November 28, 1977, page 56.

[2] International Petroleum Encyclopedia, 1975, page 296.

[3] In the years between 1978 and 1982, demand for low sulfur residual fuel oils declined substantially, so there was a reduced need to construct desulfurization facilities. But an increasing need developed to install conversion facilities to convert both high and low sulfur residual materials into lighter products.

There existed in 1978, and still exists today, a large worldwide excess of crude oil distillation capacity.[1] This surplus capacity means that high-sulfur fuel oils will be available indefinitely on the world market at prices averaging less than ten percent above the acquisition cost of crude oil.

C.2 Price Determination. The petroleum refining industry had been subject to product price controls between 1971 and 1981. Before that time the domestic market for wholesale oil products was competitive in the economic meaning of the term.[2] That is, the price elasticity of demand facing individual firms was high.

Despite a strong and continuing industry effort to establish brand differentiation for retail consumers, the wholesale petroleum product market operates on a commodity basis. Perhaps one-third of gasoline,[3] about half of intermediates and almost all of residuals are sold as commodities. With such large volumes sold as commodities by many refiners, an active brokerage business exists. Nonbrand marketers maintain aggressive purchasing staffs and oil companies compete vigorously in the various governmental, institutional and commercial "bid" markets.

Before price controls, prices on the various wholesale markets typically were close to, and varied with, short-run marginal costs.[4] This indicated that the industry was highly competitive and that refinery gate (wholesale) product prices were based on short-run marginal costs. Because of this,

---

[1] Oil and Gas Journal, June 12, 1978, page 40.

[2] Executive Office of The President, Energy Policy and Planning, The National Energy Plan, April 2, 1977, p. 59; and Federal Trade Commission, Staff Report on Effect of Federal Price and Allocation Regulations on the Petroleum Industry, December 1976, p. 1.

[3] So-called "unbranded" sales at retail by independent oil companies, commercial sales directly to users and sales to government combine to roughly over 30 percent of total gasoline sales.

[4] Stephen Sobotka & Company, The Impact of Costs Associated With New Environmental Standards upon the Petroleum Refining Industry, Council on Environmental Quality unnumbered contract, November 23, 1971, p. 37.

wholesale product prices changed essentially instantly when short-run marginal costs changed. For example, crude oil price changes were immediately reflected in product prices.[1]

Short-run marginal costs, of course, vary with capacity utilization. As the demand for products increases, more and more of total industry capacity must be brought into use to clear the market. Naturally, the highest cost, least efficient, capacity is the last to be brought into operation. So increased capacity utilization also means higher marginal costs. At some point in the expansion of production, short-run marginal costs become equal to long-run marginal costs. Long-run marginal costs are the total costs of financing, building and operating new manufacturing capacity. Long-run marginal costs include raw material costs, cash operating costs (labor, purchased power and fuel, chemicals, materials, etc.) and the capital-related costs of owning the new facilities (ad valorem and income taxes, insurance, return of capital, and return on capital).

To restate, in the absence of price controls, wholesale product prices for petroleum products have been priced close to short-run marginal refining costs. Consequently, product prices increase as more and more of industry capacity is utilized to meet product demand. At some point, product prices are sufficiently high that investment in new refining capacity becomes attractive, that is, a desirable rate-of-return can be foreseen from an investment in additional refining capacity.

It is at this stage of the capacity growth cycle that increased fixed costs become a permanent part of the price structure, since the new capacity necessarily incurs all total-cost changes. For example, increases in property taxes have no impact on short-run marginal costs but must be fully reflected in product prices before new refinery capacity will become an attractive investment.

---

[1] Short-run marginal costs always include raw materials, purchased power and fuel, and chemicals. In some cases, labor and maintenance costs will also vary with output.

The above reasoning applies to effluent water treating costs faced by new refinery capacity, and also to other environmental expenditures. The costs are essentially fixed once the facilities are in place. So the costs enter long-run, but not short-run, marginal costs.

U.S. petroleum refineries face competition not only from each other but also from foreign refineries. As was stated above, there was substantial unutilized crude oil distillation capacity in the world in 1978.[1] Despite this spare capacity, large new refineries were under construction or planned in several Middle East petroleum exporting countries.[2] From a world point-of-view these refineries were economically unjustified. They apparently were being constructed for strategic reasons[3] and to provide employment for nationals. Regardless of cause, the effect of this construction has perpetuated a low utilization rate for world refineries, particularly those in Europe.

In 1978, it was less expensive to manufacture products in U.S. refineries than in most foreign plants because of domestic crude oil price controls. However, this crude oil price advantage was to be phased out and U.S. crude oil was to be priced at world prices. Therefore, by 1984 all refineries in the world were considered to have approximately identical crude oil acquisition costs.

Note that refineries controlled by petroleum exporting countries do not necessarily face the same crude oil acquisition costs as other refineries. For competitive, political or strategic reasons, an exporting country can choose to offer crude oil to its own refineries at a lower price than to anyone else. Given time and a lack of tariff protection, a substantial portion of world refining capacity could be acquired by crude oil exporting countries through use of preferential crude oil pricing.

---

[1] Oil and Gas Journal, June 12, 1978, p. 40.

[2] Ibid.

[3] Crude oil exporting countries that own refineries have more pricing freedom than do countries that do not, since prices for crude oil sales (but not refined products) are fixed by OPEC.

The National Energy Plan implied, but did not specifically state, that maintenance of a viable U.S. petroleum refining industry was a part of the plan. For example, the strategic petroleum reserve program was planned to acquire only crude oil, and crude oil is useless without refineries. Moreover, the Deputy Secretary of the Department of Energy told a Senate Subcommittee that refining capacity on the East Coast "must be increased."[1] These observations established that it was reasonable to assume that a viable refining industry would be maintained in the United States.

In 1979, it seemed that the industry might have required protection against low-priced imports from oil exporting companies in order to remain viable. Protection could have taken many forms: domestic crude oil price controls, quotas on imported finished products, and tariffs on imported finished products. Each of these methods could have been used to achieve a desired size for the domestic industry. However, the balance of this report was written as if tariffs would be the method utilized to protect the domestic industry. This is because product tariffs are the most straightforward and easiest to understand protection method. However, other alternatives are available and might, in practice, be utilized.[2]

Of the possible levels of tariff that could be imposed, four are of particular interest:

C.2.a No tariff. In this case, industry capacity would gradually decline if OPEC nations engage in competitive practices. But there is a minimum level of capacity that would be maintained. That level is the capacity required to process crude oil produced in the U.S.[3] If U.S. refining capacity were to fall below that level, some domestic crude oil would have to be exported for refining, which would result in lower wellhead value. Consequently, in the

---

[1] Oil Daily, June 22, 1978.

[2] In practice, an import quota is likely to be most effective in protection is desired against excessive product imports from petroleum importing countries.

[3] The most economic location for refining Alaskan North Slope oil is Japan. However, legislation requires this oil to be domestically refined.

absence of tariff protection, U.S. crude oil prices would adjust to protect enough domestic refining capacity to process all domestic production.

C.2.b A tariff designed to maintain industry capacity at approximately the current level. Such a tariff would lead to attrition of the least efficient refineries that currently exist in the U.S., offset by "debottlenecking" expansion of efficient, existing refineries. The average differential between product prices and crude oil acquisition costs resulting from the tariff would probably be greater than the average differential experienced in 1978. This observation was based on an FTC analysis[1] which concluded that most refinery capacity expansion begun in the U.S. since 1975 was associated with the small refiner bias in the crude oil entitlement system. In other words, almost no expansion took place in refineries that faced average U.S. price differentials.

C.2.c A tariff designed to encourage construction of enough new domestic refinery capacity to equal the future growth in domestic product consumption. This tariff would have to be high enough that the difference between tariff-paid imported product prices and (tariff-paid) imported crude oil prices would be adequate to justify construction of new domestic capacity.

C.2.d A tariff designed to provide for growth and also to phase out the currently substantial quantity of residual fuel oil imports. To achieve a more rapid growth of output of residual fuel oil than other products, the tariff on residual fuel oil imports would need to be higher than in the preceding case.

Of the four tariff levels just discussed, the second (hold constant capacity) and the third (encourage refining capacity growth equal to product consumption growth) were of interest. The no tariff case seemed to be inconsistent with U.S. policy, although it was the case actually implemented. The highest tariff case (phase out residual imports) would lead to substantial windfall

---

[1] Federal Trade Commission, op. cit.

profits for existing refineries and did not seem to be necessary for strategic reasons.[1] Consequently, the economic impact analysis performed in this study included tariff level as a parameter to be evaluated at two levels. The effects of differing tariff levels are depicted in Exhibit II.2.

C.3 Industry Segmentation. The proper basis upon which to segment the petroleum refining industry for an economic impact analysis of effluent guidelines is the individual refinery, including its raw material acquisition and wholesale product shipping activities. There were several reasons for this conclusion:

C.3.a Revised effluent guidelines will be established for each individual refinery, not for refining companies, or for subdivisions of refineries.

C.3.b There is an active market for all domestic crude oil which guarantees that every barrel produced will be purchased at the same delivered price that the purchaser pays for other domestic crude oils of the same quality at that location. Consequently, a decision to close down a refinery will disadvantage the crude oil suppliers of that refinery only by the amount of additional transportation expense they may have to incur to deliver the material to a different location. Note that if the location disadvantage is severe, it may be cheaper for crude oil suppliers to reduce their price to the existing nearby refinery to enable it to keep going rather than to absorb substantial additional transportation costs.

C.3.c Most refined petroleum products are fungible and widely available in large quantities at wholesale prices that are quoted daily in such publications as "Platts Oilgram Price Service" and "Oil Daily." As noted earlier, over half of the industry's outturn is sold as commodities without

---

[1] Most residual fuel oil imports come from refineries located in the Caribbean. These same refineries would be available, in the event of an embargo, to process crude oil stored under the strategic storage plan.

Exhibit II.2

THE EFFECT OF PRODUCT IMPORT TARIFFS ON CONSUMPTION, DOMESTIC MANUFACTURE AND IMPORTS OF PETROLEUM PRODUCTS

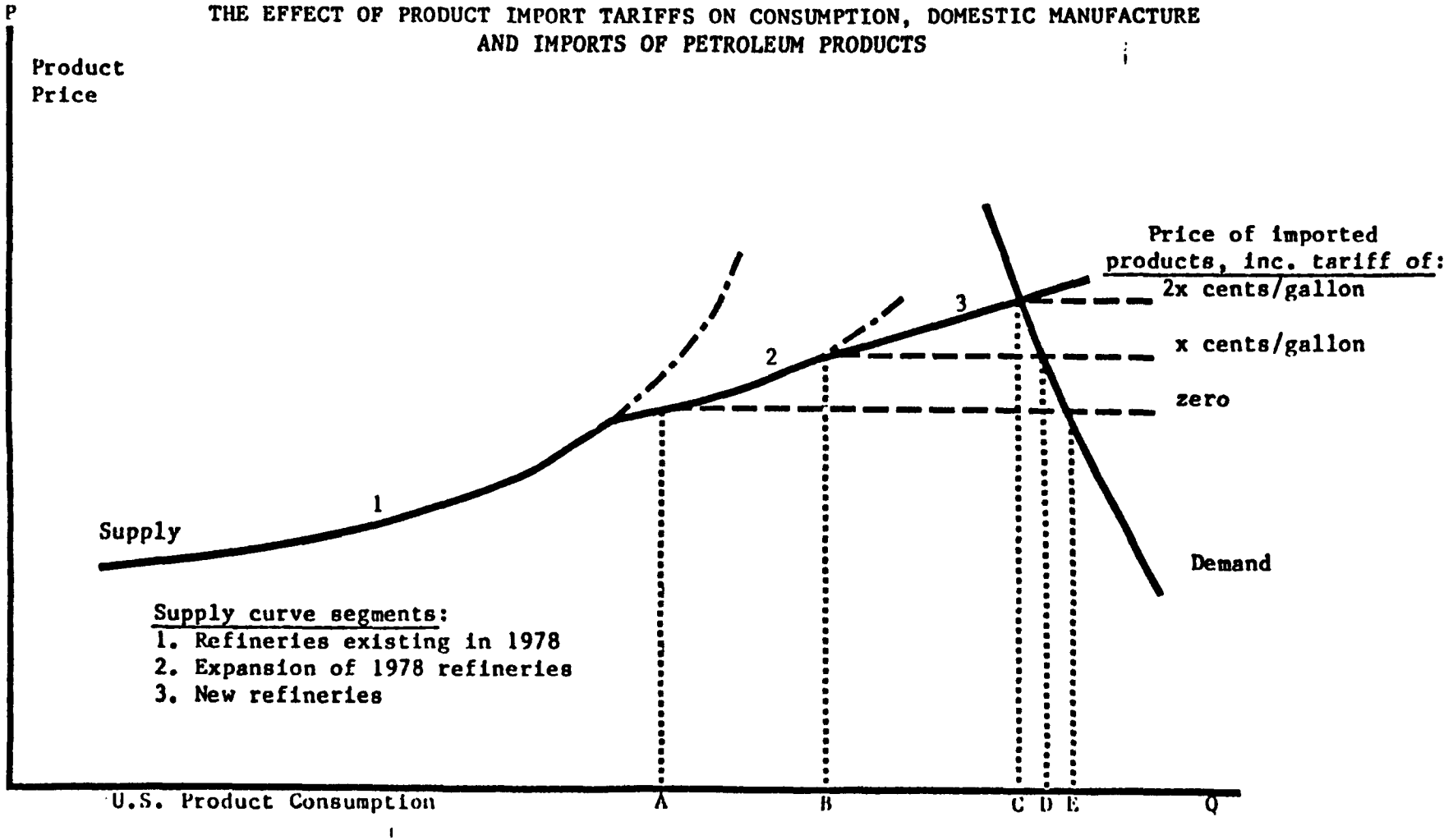

	Tariff		
	Zero	x	2x
Total Consumption	OE	OD	OC
Domestic Manufacture	OA	OB	OC
Imports	AE	BD	--

brand identification. Moreover, in order to reduce transportation costs, there is substantial trading between suppliers of products that are eventually sold on the branded market.

The decision to shut down a refinery, because of pollution control costs or any other reason, is based on economic criteria. The criteria will be the same for an independent refinery as for one that is part of a company integrated forward to the retail market and backwards to crude oil production. The decision to shut down would be based on an evaluation of the cash flow from the refining/marketing system. If the present value of expected future net cash flow generated by keeping the refinery going is less than the plant's salvage value, it would be better to scrap the refinery than to keep it in operation. There are no unusual or hidden profits of integration that need to be considered.[1]

The preceding discussion shows that the individual refinery rather than the company is the proper level at which to analyze the industry for refinery closures. More important than intercompany differences are the different types of refineries that will each be uniquely affected by revised effluent treatment guidelines.

C.3.c.i Discharge mode. There are four modes of waste water discharge from refineries: 1) Many refineries discharge no effluent water. In some cases effluent water can all be disposed by such methods as treatment and reuse, underground disposal via injection wells, percolation into sandy or gravelly soil, or open pit evaporation. Such refineries will be unaffected by effluent guidelines. 2) Several refineries discharge their effluent to publicly-owned treatment works (POTWs) for treatment. Such arrangements will be regulated by revised pretreatment guidelines. 3) A few refineries, notably in the San Joaquin Valley in California and along the Houston ship channel,

---

[1] This has not always been the case. Before the crude oil production depletion allowance was repealed, there probably were gains from integration. Also, transportation facilities probably were not in the past, and it is alleged, may not presently be equally accessible to all refiners and marketers.

discharge effluent to jointly-owned industrial treatment plants. It was unclear whether such refinery/treatment plant combinations will be governed by a combination of revised pretreatment guidelines and municipal secondary treatment regulations, or by revised BATEA guidelines. It was assumed that these refineries are not subject to revised BATEA guidelines. 4) All other refineries discharge directly into receiving bodies. These plants will be subject to revised BAT guidelines. A summary of refinery capacity by waste water discharge mode was provided in Exhibit II.1.

C.3.c.ii New or existing source. New refineries will be subject to new source performance standards (NSPS or PSNS). Refineries or major expansions of existing refineries for which construction starts after proposal of these regulations will be subject to these new source standards.

C.3.c.iii Refinery process unit configuration. Refinery configuration is a good proxy for determining the value added by refining. The more highly configured a refinery is -- that is, the more complex it is -- the higher will be the average unit value of its products and hence its value added per unit of throughput. It is useful to distinguish between five levels of refinery complexity. 1) The most simple plants are those that have only one significant processing facility, a crude oil distillation, or "topping", unit. Such refineries process crude oil into residual and distillate fuel or chemical plants). 2) Slightly more complex refineries consist of topping capacity plus vacuum distillation of residual fuel oil. Such refineries process high-sulfur crude oils into asphalt, high-sulfur distillate and naphtha. 3) Refineries equipped with both topping and catalytic reforming facilities are able to process crude oils into gasoline and fuel oils. 4) Refineries equipped with topping and catalytic reforming plus cracking (catalytic, hydro or thermal) are able to "convert" into gasoline some material that would otherwise be fuel oil. Consequently, such refineries typically process crude oils into a high fraction of gasoline, plus kerosene jet fuel (for commercial aircraft) and low-sulfur fuel oils. 5) Refineries equipped for the manufacture of lubricating oils are highly complex, requiring large investment per unit volume of finished lubricating oil. Small lubricating oil refineries typically include only catalytic reforming in addition to topping and lubricating oil processes.

C.3.c.iv Geographic location. Location is important for judging a refinery's competitive position. The least advantageously located refinery would be one sited in an area, such as Houston, that has many other refineries which bring in crude oil and process it into products that must be shipped to markets elsewhere in the United States. The most advantageously located refinery would be adjacent to an oil producing field with most of its sales within short truck delivery distance, and no other refineries or product pipeline terminals in the area.

Because so few refineries will be significantly affected by revised guidelines it was not necessary to develop a formal methodology for describing the competitive strength or weakness of geographic locations. Rather, this factor was evaluated on an individual basis.

C.4 Financial Status of Industry Segments. As was discussed in the first part of this section, the financial status of the petroleum refining industry in 1978 was not considered relevant for judging the impacts of 1984 of revised guidelines. Instead, the impact assessment was based on the financial status that would be expected without price controls but with one or the other of two levels of government protection of the industry.

C.4.a Low protection. A level of protection was assumed that would hold industry capacity roughly constant. Some capacity increase would take place in refineries that are competitively well situated and can be inexpensively "debottlenecked," and some abandonment of inefficient facilities would take place. With this level of protection the industry would be financially marginal.

C.4.b High protection. A level of protection was assumed that would cause the industry to grow at a rate equal to the growth in domestic consumption of petroleum products. With this level of protection the industry would be financially strong. The difference in price between crude oil and finished products would have to be significantly greater than it was in 1978 to attract new refining investments. Then-existing refineries therefore would experience greatly increased cash flows.

Chapter III
METHODOLOGY

This chapter outlines the methodology used in the economic analysis of revised effluent guidelines for the petroleum refining industry. The economic impact analysis included two keys steps: determination of the price effects of the revised guidelines, and determination of quantity and employment effects associated with price changes and with the shutdown of plants faced with high costs to conform.

A. Price Analysis

The analysis is based on two alternative levels of protective tariff on imported petroleum products. The two levels are explained and justified on pages II-10 and II-11.

The price in a competitive market for any manufactured product is determined by the cost of the highest-cost supplier whose output clears the market. In the case of petroleum products in the U.S. market, there was not enough existing domestic refinery capacity to clear the market for most products. So the market clearing supply came from either imports or domestic capacity expansions.

Foreign refineries had substantial idle capacity that could have been operated at lower costs than can many existing U.S. refineries. So, in the absence of crude oil price controls the U.S. market price would, up to a point, be determined by foreign refining costs plus U.S. import tariff costs. However, at some level of tariff, the cost of imports would have become greater than the cost of products manufactured in new U.S. facilities.

The price of imports was not affected at all by revised guidelines. So revised guidelines would have had no impact on market prices of petroleum products at all tariff/quota levels below that necessary to encourage construction of new domestic capacity.

At tariff levels sufficiently high to encourage new domestic refinery construction, revised guidelines for new plants (NSPS or PSNS) would have had a price effect. U.S. market prices for petroleum products would have had to fully reflect the full long-run cost of installing more stringent treatment facilities, or the new construction would not have been economically attractive and hence would not have taken place.

B. Quantity Analysis

At high tariff levels, revised NSPS and PSNS could have had a price effect and an associated quantity effect. The quantity was determined by the price elasticity of demand for petroleum products. However, at that overall market price level, no existing refineries were forced to shutdown by the costs of meeting the revised guidelines.

At low levels of tariff, there would be no quantity effects due to price. But there might have been shutdowns of existing refineries with high costs-to-conform to revised guidelines. The shutdown analysis entailed comparing the value of each existing discharging refinery with the costs of conforming it to revised guidelines. The value of the existing refinery was established from an investor's point of view: that is, as a source of cash income. From that viewpoint, past capital investments or the cost to reproduce the refinery were irrelevant. The only criteria that established value were the amount and timing of future cash to be returned to the investor. The analysis, then, consisted of two steps: estimation of future cash flows from the refineries, and comparison of these cash flows with the costs of conforming effluent quality from those refineries to the requirements of revised guidelines.

Since product prices and consumption would not be affected by the costs of conforming existing refineries to revised guidelines, the shutdown analysis was straightforward. The cost to conform each refinery to revised guidelines was compared with the value of each refinery as defined above. Refineries which faced conforming costs greater than their value would shut down. All others

would continue to operate, though their value would diminish by the capitalized value of the costs to conform.

It was conceivable that the salvage value of a plant could have been greater than its value from an investor's viewpoint. If this were so, the plant would be scrapped even though it showed a positive present value cash flow. But this could not happen in practice, for the salvage value of refinery equipment was predominantly based on its usefulness to other refiners. Prices for salvaged refinery equipment were high when it was profitable to construct and operate new refineries. Conversely, when refinery operations were marginal, salvage values were also low.

The balance of trade effects of revised guidelines would reflect only the necessity to replace volume from the very few refineries that would have chosen to shut down rather than conform to the guidelines. Employment effects of revised guidelines would reflect the number of new employees required to operate and maintain the new effluent treating equipment offset by the number of employees losing work due to refinery shutdowns.

Chapter IV

COSTS OF CONFORMING PETROLEUM REFINERIES TO REVISED BATEA GUIDELINES, NEW SOURCE PERFORMANCE STANDARDS, PRETREATMENT GUIDELINES, AND PRETREATMENT STANDARDS FOR NEW SOURCES

The cost data used in this study consisted of two sets of capital costs and operating costs for most refineries that discharged during 1976 (see "Coverage" in Section B of Chapter II). Five sets of costs were furnished for a model new refinery. The data were prepared by the Effluent Guidelines Division, Office of Water and Hazardous Materials, U.S. Environmental Protection Agency; and Burns and Roe Industrial Services Corp.[1] All costs were stated in dollars of 1977 purchasing power. These costs had been approved for use in this report by EPA. The contractor was instructed to use the costs as revised in the latest document.

A. Existing Sources

For indirectly discharging existing refineries, costs were developed for two alternative treatment methods. Either method was assumed to be applied to effluent that has already been treated to the quality defined in Draft Supplement for Pretreatment to the Development Document for the Petroleum Refining Industry Existing Point Source Category, EPA 440/1-76/083, December 1976. "Option 1" is to treat cooling tower blowdown water to remove chromium. "Option 2" is a combination of flow reduction, biological treatment, equalization and filtration that is intended to bring pollutant mass discharge into conformance with revised PSES.[2]

---

[1] The data for direct dischargers were reported in March, 1979, in Cost Manual for the Direct Discharge Segment of the Petroleum Refining Industry as revised on September 15, 1979. The data for indirect dischargers were reported in a letter from Burns and Roe to Sobotka & Co., Inc., dated May 18, 1979. The data for new source dischargers were reported in a letter from Burns and Roe to Effluent Guidelines Division, U.S. Environmental Protection Agency, dated April 11, 1979.

[2] The revised PSES definition used for Option 2 is not the same as the revised BAT guideline for direct dischargers. The Option 2 definition is associated with a version of the Cost Manual that was issued in April 1978.

For directly discharging existing refineries, costs were also developed for two alternative levels of treatment. Either alternative was assumed to be applied to effluent that has already been treated to best practical technology (BPT) quality. For both levels the flow was based on 73 percent of the "model flow" computed for that refinery. Details of the model flow equation were presented in the March 1979 "Cost Manual."

Costs for the two levels of treatment were derived from the following treatment schemes: Level 1 - flow reduction to 73 percent of model flow, plus installation of equalization and filtration (if not already installed). Level 2 - all Level 1 installations plus installation of either powdered activated carbon addition facilities or rotating biological contractors.

The cost data are presented for direct and indirect dischargers in Exhibits IV.1 and IV.2, respectively. Exhibit IV.3 contains a summary of costs for these refineries.

A term appears in Exhibits IV.1, IV.2 and IV.3 that may require explanation. "Annualized costs" combine capital cost and operating cost into a single value that represents average total annual disbursements required to finance, operate, and amortize a facility. The "annualized costs" presented in the exhibits are the sum of two components:

A.1 The first component is annual cash operating costs for labor, materials, chemicals, energy, insurance, and ad valorem taxes. These costs were those provided in the Cost Manual and the Burns and Roe letters plus the estimated value of increased and ad valorem taxes. The latter costs together amount annually to about four percent of original capital investment.[1]

---

[1] Sobotka & Company, Inc., Economic Impact of EPA's Regulations on the Petroleum Refining Industry, April 1976, EPA 230/3-76-004, Part Two, p. II-2. The data were supplied by Turner, Mason & Solomon from a survey of Gulf refiners.

A.2 The second component is capital recovery and return-on-investment at the rate of 12 percent per year, the rate recommended by EPA.[1] It was assumed that the investments would have the following characteristics: Twenty-year physical life, sixteen-year life for depreciation, double declining balance depreciation schedule, fifty percent income tax rate, no investment tax credit, no working capital, no salvage value, and construction funds spent over a two-year period: thirty percent in the first year and seventy percent in the second.

These parameters led to an annual before-tax cash flow requirement of twenty-one percent of capital cost. In other words, the owners of such an asset could, on average, have taken this much cash out of the business each year of its useful life. Some of it, of course, must have been paid as income tax.

The derivation of annual capital charges could have included other factors. On the one hand, inclusion of the investment tax credit and of rapid amortization (allowed for pollution control facilities) would have led to lower annual charges. Alternatively, inclusion of land costs (assumed to be zero) and of "sustaining" investments[2] would have led to higher charges. The excluded factors roughly offset each other. The effect of higher annual charges was derived in Chapter VII.

Costs were converted to a per-barrel basis on the assumption that crude oil throughput would average ninety percent of calendar day capacity. It was noted that such a rate of capacity utilization might not be achievable by

---

[1] Gerald A. Pogue, Estimation of the Cost of Capital for Major U.S. Industries, November 1975, EPA 230/3-76-001.

[2] Replacement of worn out equipment; installation of facilities required to meet new and/or revised environmental, safety and health regulations; replacement of obsolescent equipment with new equipment that costs less to operate and/or maintain, such as more efficient furnaces and motors; and installation of new equipment to take advantage of technological advances, e.g., new cracking or reforming catalysts, process control computers, etc. See David F. Hart, Harvard Business Review, Vol. 46, No. 5 (September/October 1968), p. 32.

some asphalt refineries with highly seasonal demand. Reported annual average operating rates in 1976 for asphalt refineries ranged from 17 percent to 100 percent of capacity. Had several years of data been available, it would have been better to use a historical average rate for each plant rather than an assumed rate, but such data were not available.

B. New Sources

The costs of conforming new source refineries to revised guidelines were computed for a specific model refinery. The model[1] was sized for a capacity of 190,000 barrels per calendar day of Arabian Light crude oil. The model was configured for a high yield of gasoline, commercial jet fuel and distillate fuel oil to correspond with demand growth forecasts published by the Department of Energy.[2]

Current NSPS (BADT) regulations for new, directly-discharging refineries corresponded closely to revised Level 1 NSPS guidelines, so there was no cost for conforming the model to this level. Revised Level 2 NSPS guideline costs represented the addition of a powdered activated carbon facility to the (assumed) existing activated sludge unit.

Level 1 revised guideline PSNS costs were based on chromium removal from cooling tower blowdown. Level 2 revised PSNS costs were based on installing BPT technology, including activated sludge treatment, filtration, and appropriate inplant controls.

---

[1] Memorandum from Sobotka & Co., Inc., to Office of Analysis and Evaluation, NSPS Refinery Configuration, February 14, 1979.

[2] Energy Information Administration, Annual Report to Congress 1977, Volume II - Projections of Energy Supply and Demand and Their Impacts, DOE/EIA - 0036/2, April 1978, Chapter 5.

Costs of conforming the model new refinery to revised NSPS and PSNS are presented in Exhibit IV.4. Also shown are costs for achieving no aqueous discharge.[1]

---

[1] EPA Internal Memorandum from Effluent Guidelines Division to Office of Analysis and Evaluation, Compliance Cost for Achieving No Discharge - New Petroleum Refineries, 5 June 1979. These 1972 costs were inflated to 1977 using cost indices published in the Oil and Gas Journal.

Exhibit IV.1

COSTS TO DIRECTLY DISCHARGING PETROLEUM REFINERIES
OF CONFORMING TO REVISED BATEA GUIDELINES

Refinery Code	Crude Oil Distillation Capacity (1000 bpd)	Capital Costs (1000 $)		Operating Costs (1000 $/year)		Annualized Costs Total (1000 $/year)		Annualized Costs Unit (cents/barrel)	
		Lev 1	Lev 2	Lev 1	Lev 2	Lev 1	Lev 2	Lev 1	Lev 2
TOPPING CONFIGURATION									
2	20.0	0	50	0	11	0	22	0	0.3
6	22.0	0	85	0	11	0	29	0	0.4
70	13.0	12	160	9	33	12	67	0.3	1.6
100	11.0	0	35	0	11	0	18	0	0.5
189	5.0	0	53	0	8	0	19	0	1.2
197	4.4	0	50	0	8	0	18	0	1.3
199	9.7	125	197	13	23	39	64	1.2	2.0
255	29.5	0	115	0	15	0	39	0	0.4
266	5.9	130	190	13	74	40	114	2.1	5.9
292	1.0	0	0	0	0	0	0	0	0
Subtotal	121.5	267	935	35	194	91	390		
ASPHALT CONFIGURATION									
3	1.2	0	35	0	6	0	13	0	3.4
9	3.5	0	52	0	8	0	19	0	1.6
19	2.5	0	0	0	0	0	0	0	0
52	4.0	0	240	0	26	0	76	0	5.8
53	14.0	0	35	0	19	0	26	0	0.6
54	3.0	0	35	0	12	0	19	0	2.0
72	8.5	0	35	0	18	0	25	0	0.9

Exhibit IV.1 (continued)

COSTS TO DIRECTLY DISCHARGING PETROLEUM REFINERIES
OF CONFORMING TO REVISED BATEA GUIDELINES

Refinery Code	Crude Oil Distillation Capacity (1000 bpd)	Capital Costs (1000 $)		Operating Costs (1000 $/year)		Annualized Costs Total (1000 $/year)		Annualized Costs Unit (cents/barrel)	
		Lev 1	Lev 2	Lev 1	Lev 2	Lev 1	Lev 2	Lev 1	Lev 2
ASPHALT CONFIGURATION (CONTINUED)									
108	13.9	0	35	0	9	0	16	0	0.4
118	6.0	0	55	0	9	0	21	0	1.0
119	11.0	0	115	0	15	0	39	0	1.1
120	4.2	0	100	0	13	0	34	0	2.5
236	4.5	0	35	0	14	0	21	0	1.4
237	5.0	0	35	0	7	0	14	0	0.9
260	3.0	0	58	0	9	0	21	0	2.2
Subtotal	84.2	0	865	0	165	0	344		
TOPPING PLUS CHEMICALS									
109	23.5	0	40	0	27	0	35	0	0.5
REFORMING CONFIGURATION									
1	30.0	0	50	0	23	0	34	0	0.3
7	38.0	0	70	0	10	0	25	0	0.2
24	53.3	0	240	0	26	0	76	0	0.4
30	22.8	180	230	18	44	56	92	0.7	1.2
87	5.2	125	220	13	26	39	72	2.3	4.2
88	45.0	0	175	0	20	0	57	0	0.4
91	3.9	0	35	0	5	0	12	0	1.0

Exhibit IV.1 (continued)

COSTS TO DIRECTLY DISCHARGING PETROLEUM REFINERIES
OF CONFORMING TO REVISED BATEA GUIDELINES

Refinery Code	Crude Oil Distillation Capacity (1000 bpd)	Capital Costs (1000 $)		Operating Costs (1000 $/year)		Annualized Costs Total (1000 $/year)		Annualized Costs Unit (cents/barrel)	
		Lev 1	Lev 2	Lev 1	Lev 2	Lev 1	Lev 2	Lev 1	Lev 2
REFORMING CONFIGURATION (CONTINUED)									
93	6.5	0	35	0	7	0	14	0	0.7
103	36.0	0	78	0	11	0	27	0	0.2
112	12.5	160	330	16	36	50	105	1.2	2.6
190	9.0	0	60	0	9	0	22	0	0.7
210	18.1	0	35	0	6	0	13	0	0.2
213	21.6	0	73	0	10	0	25	0	0.4
239	22.7	0	35	0	18	0	25	0	0.3
259	655.0	0	75	0	172	0	188	0	0.1
265	200.0	0	48	0	53	0	63	0	0.1
Subtotal	1,179.6	465	1,789	47	476	145	850		
CRACKING CONFIGURATION									
11	47.0	0	60	0	70	0	83	0	0.5
20	100.0	0	75	0	153	0	169	0	0.5
32	110.0	0	4,000	0	352	0	1,192	0	3.3
37	103.0	0	1,600	0	148	0	484	0	1.4
40	405.0	435	555	35	550	126	667	0.1	0.5
41	365.0	0	6,400	0	546	0	1,890	0	1.6
43	80.0	0	2,100	0	186	0	627	0	2.4
46	65.5	0	60	0	75	0	88	0	0.4

Exhibit IV.1 (continued)

COSTS TO DIRECTLY DISCHARGING PETROLEUM REFINERIES
OF CONFORMING TO REVISED BATEA GUIDELINES

Refinery Code	Crude Oil Distillation Capacity (1000 bpd)	Capital Costs (1000 $)		Operating Costs (1000 $/year)		Annualized Costs Total (1000 $/year)		Annualized Costs Unit (cents/barrel)	
		Lev 1	Lev 2	Lev 1	Lev 2	Lev 1	Lev 2	Lev 1	Lev 2
CRACKING CONFIGURATION (CONTINUED)									
49	33.5	0	120	0	15	0	40	0	0.4
50	21.5	0	565	0	57	0	176	0	2.5
51	150.0	865	3,140	602	1,030	784	1,689	1.6	3.4
56	40.0	195	1,100	22	106	63	337	0.5	2.6
57	107.0	530	630	112	678	223	810	0.6	2.3
59	57.0	0	75	0	88	0	104	0	0.6
60	195.0	0	75	0	148	0	164	0	0.3
61	200.0	0	80	0	208	0	225	0	0.3
62	295.0	0	100	0	377	0	398	0	0.4
63	91.0	0	1,900	0	125	0	524	0	1.8
64	78.0	235	310	25	221	74	286	0.3	1.1
65	154.0	370	470	42	328	120	427	0.2	0.8
67	380.0	2,610	5,860	379	869	927	2,100	0.7	1.7
68	140.0	385	485	54	434	135	536	0.3	1.2
71	21.0	0	200	0	230	0	65	0	0.9
74	22.5	0	170	0	20	0	56	0	0.8
76	42.5	180	1,430	19	135	57	435	0.4	3.1
77	23.2	0	40	0	30	0	38	0	0.5
80	52.0	0	90	0	13	0	32	0	0.2

Exhibit IV.1 (continued)

COSTS TO DIRECTLY DISCHARGING PETROLEUM REFINERIES
OF CONFORMING TO REVISED BATEA GUIDELINES

Refinery Code	Crude Oil Distillation Capacity (1000 bpd)	Capital Costs (1000 $)		Operating Costs (1000 $/year)		Annualized Costs Total (1000 $/year)		Annualized Costs Unit (cents/barrel)	
		Lev 1	Lev 2	Lev 1	Lev 2	Lev 1	Lev 2	Lev 1	Lev 2
CRACKING CONFIGURATION (CONTINUED)									
81	57.0	160	1,040	16	99	50	317	0.3	1.7
83	90.0	0	85	0	195	0	213	0	0.7
84	80.0	0	75	0	142	0	158	0	0.6
85	138.0	0	95	0	268	0	288	0	0.6
92	270.0	480	2,810	50	479	151	1,069	0.2	1.2
94	85.0	228	303	22	169	70	233	0.3	0.8
96	528.0	0	2,480	0	442	0	963	0	0.6
97	50.0	0	35	0	12	0	19	0	0.1
98	202.3	0	1,600	0	144	0	480	0	0.7
99	28.7	0	83	0	11	0	28	0	0.3
102	90.0	230	305	23	45	71	109	0.2	0.4
104	298.0	0	4,100	0	344	0	1,205	0	1.2
105	89.0	305	380	34	218	98	298	0.3	1.0
106	154.9	0	1,100	0	104	0	335	0	0.7
113	42.0	0	330	0	34	0	103	0	0.7
115	131.9	0	90	0	220	0	239	0	0.6
116	68.0	0	900	0	84	0	273	0	1.2
117	30.0	355	945	23	80	98	278	1.0	2.8
121	295.0	0	3,100	0	275	0	926	0	1.0

Exhibit IV.1 (continued)

COSTS TO DIRECTLY DISCHARGING PETROLEUM REFINERIES
OF CONFORMING TO REVISED BATEA GUIDELINES

Refinery Code	Crude Oil Distillation Capacity (1000 bpd)	Capital Costs (1000 $)		Operating Costs (1000 $/year)		Annualized Costs Total (1000 $/year)		Annualized Costs Unit (cents/barrel)	
		Lev 1	Lev 2	Lev 1	Lev 2	Lev 1	Lev 2	Lev 1	Lev 2
CRACKING CONFIGURATION (CONTINUED)									
122	107.0	520	4,920	104	485	213	1,518	0.6	4.3
124	42.0	0	365	0	38	0	115	0	0.8
125	56.0	0	340	0	35	0	106	0	0.6
126	46.0	260	4,660	36	422	91	1,400	0.6	9.3
127	6.5	0	150	0	18	0	50	0	2.3
129	5.0	120	220	13	26	38	72	2.3	4.4
131	168.0	0	90	0	240	0	259	0	0.5
132	300.0	740	3,070	138	577	293	1,222	0.3	1.2
133	100.0	660	785	161	767	300	932	0.9	2.8
134	103.0	350	450	48	366	122	460	0.4	1.4
144	49.9	0	113	0	14	0	38	0	0.2
146	4.9	125	220	13	26	39	72	2.4	4.5
147	65.0	0	40	0	53	0	61	0	0.3
149	44.0	170	970	18	92	54	296	0.4	2.0
150	51.0	0	52	0	83	0	94	0	0.6
151	177.0	330	3,030	32	272	101	908	0.2	1.6
152	120.0	630	745	143	760	275	916	0.7	2.3
153	125.0	0	100	0	304	0	325	0	0.8
155	14.5	0	95	0	13	0	33	0	0.7

Exhibit IV.1 (continued)

COSTS TO DIRECTLY DISCHARGING PETROLEUM REFINERIES
OF CONFORMING TO REVISED BATEA GUIDELINES

Refinery Code	Crude Oil Distillation Capacity (1000 bpd)	Capital Costs (1000 $)		Operating Costs (1000 $/year)		Annualized Costs Total (1000 $/year)		Annualized Costs Unit (cents/barrel)	
		Lev 1	Lev 2	Lev 1	Lev 2	Lev 1	Lev 2	Lev 1	Lev 2
CRACKING CONFIGURATION (CONTINUED)									
156	55.0	0	475	0	48	0	148	0	0.8
157	130.3	0	75	0	164	0	180	0	0.4
158	54.6	0	40	0	51	0	59	0	0.3
159	19.0	0	225	0	24	0	71	0	1.1
160	23.5	0	35	0	22	0	29	0	0.4
161	51.0	0	275	0	29	0	87	0	0.5
162	90.0	0	75	0	201	0	217	0	0.7
163	52.0	0	700	0	70	0	217	0	1.3
165	60.0	0	234	0	26	0	75	0	0.4
167	195.0	575	675	82	482	203	624	0.3	1.0
168	170.0	0	80	0	231	0	248	0	0.4
169	188.0	720	845	125	799	276	976	0.4	1.6
176	52.0	0	285	0	30	0	90	0	0.5
179	26.0	0	225	0	25	0	72	0	0.8
180	80.0	315	390	41	261	107	343	0.4	1.3
181	363.0	980	3,540	145	590	351	1,333	0.3	1.1
183	63.0	0	420	0	42	0	130	0	0.6
184	67.0	0	75	0	103	0	119	0	0.5
186	185.0	0	75	0	149	0	165	0	0.3

Exhibit IV.1 (continued)

COSTS TO DIRECTLY DISCHARGING PETROLEUM REFINERIES
OF CONFORMING TO REVISED BATEA GUIDELINES

Refinery Code	Crude Oil Distillation Capacity (1000 bpd)	Capital Costs (1000 $)		Operating Costs (1000 $/year)		Annualized Costs Total (1000 $/year)		Annualized Costs Unit (cents/barrel)	
		Lev 1	Lev 2	Lev 1	Lev 2	Lev 1	Lev 2	Lev 1	Lev 2
CRACKING CONFIGURATION (CONTINUED)									
194	405.0	750	10,100	74	945	232	3,066	0.2	2.3
196	319.0	1,280	4,380	244	724	513	1,644	0.5	1.6
201	66.0	0	60	0	82	0	95	0	0.4
204	103.0	268	358	29	297	85	372	0.3	1.1
205	103.4	270	1,970	27	180	84	594	0.2	1.8
208	310.0	0	100	0	394	0	415	0	0.4
211	125.0	0	60	0	71	0	84	0	0.2
212	60.0	0	50	0	63	0	74	0	0.4
216	476.0	0	3,250	0	488	0	1,170	0	0.7
219	80.7	0	850	0	82	0	260	0	1.0
221	129.5	300	390	34	297	97	379	0.2	0.9
222	13.5	155	430	16	45	49	135	1.1	3.1
226	7.5	0	65	0	10	0	24	0	1.0
227	45.0	0	60	0	98	0	111	0	0.8
230	25.0	0	520	0	52	0	161	0	2.0
232	55.0	0	60	0	92	0	105	0	0.6
233	100.0	0	60	0	87	0	100	0	0.3
234	75.0	0	60	0	87	0	100	0	0.4
235	94.0	0	75	0	123	0	139	0	0.4

Exhibit IV.1 (continued)

COSTS TO DIRECTLY DISCHARGING PETROLEUM REFINERIES
OF CONFORMING TO REVISED BATEA GUIDELINES

Refinery Code	Crude Oil Distillation Capacity (1000 bpd)	Capital Costs (1000 $)		Operating Costs (1000 $/year)		Annualized Costs Total (1000 $/year)		Annualized Costs Unit (cents/barrel)	
		Lev 1	Lev 2	Lev 1	Lev 2	Lev 1	Lev 2	Lev 1	Lev 2
CRACKING CONFIGURATION (CONTINUED)									
238	78.0	243	318	27	181	78	248	0.3	1.0
243	42.0	0	145	0	17	0	47	0	0.3
252	10.6	0	115	0	15	0	39	0	1.1
256	40.0	0	285	0	30	0	90	0	0.7
257	150.0	0	1,400	0	128	0	422	0	0.9
261	40.0	180	228	18	59	56	107	0.4	0.8
Subtotal	12,568.9	17,504	106,094	3,026	22,935	6,704	45,217		
LUBRICATING OIL CONFIGURATION									
10	6.0	0	70	0	10	0	25	0	1.3
12	4.5	0	441	0	45	0	138	0	9.3
89	4.0	0	77	0	12	0	28	0	2.1
90	2.2	0	60	0	9	0	22	0	3.0
154	5.5	0	700	0	68	0	215	0	11.9
172	12.0	185	235	22	88	61	137	1.5	3.5
173	3.5	160	200	16	61	50	103	4.3	9.0
174	7.1	135	565	13	57	41	176	1.8	7.5
177	7.6	175	225	19	86	56	133	2.2	5.3
240	5.5	0	40	0	26	0	34	0	1.9
241	12.0	0	45	0	42	0	51	0	1.3

Exhibit IV.1 (continued)

COSTS TO DIRECTLY DISCHARGING PETROLEUM REFINERIES
OF CONFORMING TO REVISED BATEA GUIDELINES

Refinery Code	Crude Oil Distillation Capacity (1000 bpd)	Capital Costs (1000 $)		Operating Costs (1000 $/year)		Annualized Costs Total (1000 $/year)		Annualized Costs Unit (cents/barrel)	
		Lev 1	Lev 2	Lev 1	Lev 2	Lev 1	Lev 2	Lev 1	Lev 2
LUBRICATING OIL CONFIGURATION (CONTINUED)									
242	5.2	0	40	0	30	0	38	0	2.3
258	85.5	0	60	0	86	0	99	0	0.4
Subtotal	160.0	655	2,758	70	620	208	1,199		
PLANT DOES NOT PROCESS CRUDE OIL[1]									
295	0.0	170	210	18	44	54	88		
309	0.0	220	265	482	524	528	580		
Subtotal	0.0	390	475	500	568	582	668		
Grand Total Direct	14,141.8	19,281	112,956	3,678	24,985	7,730	48,703		

[1] No entry for Item II.A in reply to Section 308 Questionnaire.

Exhibit IV.2

COSTS TO INDIRECTLY DISCHARGING PETROLEUM REFINERIES
OF CONFORMING TO REVISED BATEA GUIDELINES

Refinery Code	Crude Oil Distillation Capacity	Capital Costs		Operating Costs		Annualized Costs			
						Total		Unit	
		Opt 1	Opt 2	Opt 1	Opt 2	Opt 1	Opt 2	Opt 1	Opt 2
	(1000 bpd)	(1000 $)		(1000 $/year)		(1000 $/year)		(cents/barrel)	
TOPPING CONFIGURATION									
23	16.0	0	315	0	73	0	139	0	2.7
110	6.0	0	250	0	67	0	120	0	6.1
128	3.8	0	277	0	41	0	99	0	10.0
145	5.2	59	247	9	65	21	117	1.3	6.9
193	3.2	59	247	9	65	21	117	2.0	11.1
195	1.0	0	247	0	65	0	117	0	35.7
206	36.5	70	437	11	113	26	205	0.2	1.7
231	10.0	0	1,110	0	422	0	655	0	20.0
264	23.0	0	250	0	66	0	119	0	1.6
305	13.0	103	277	15	41	37	99	0.9	2.3
Subtotal	116.9	291	3,657	44	1,018	105	1,787		
ASPHALT CONFIGURATION									
8	5.0	63	0	10	0	23	0	1.4	0
18	19.5	145	495	19	78	49	182	0.8	2.8
31	12.0	100	247	14	65	35	117	0.9	3.0
79	3.0	0	0	0	0	0	0	0	0
107	17.0	100	255	14	68	35	122	0.6	2.2
148	20.0	0	493	0	131	0	235	0	3.6
166	14.0	118	273	17	108	42	165	0.9	3.6
Subtotal	90.5	526	1,763	74	450	184	821		

Exhibit IV.2 (continued)

COSTS TO INDIRECTLY DISCHARGING PETROLEUM REFINERIES
OF CONFORMING TO REVISED BATEA GUIDELINES

Refinery Code	Crude Oil Distillation Capacity	Capital Costs		Operating Costs		Annualized Costs			
						Total		Unit	
		Opt 1	Opt 2	Opt 1	Opt 2	Opt 1	Opt 2	Opt 1	Opt 2
	(1000 bpd)	(1000 $)		(1000 $/year)		(1000 $/year)		(cents/barrel)	
TOPPING PLUS CHEMICALS									
207	46.0	166	375	23	108	58	187	0.4	1.2
REFORMING CONFIGURATION									
16	48.0	188	826	28	169	67	342	0.4	2.2
21	20.0	102	373	14	78	35	156	0.5	2.4
291	15.2	202	250	39	61	81	114	1.6	2.3
Subtotal	83.2	492	1,449	81	308	183	612		
CRACKING CONFIGURATION									
13	193.0	620	5,800	211	858	341	2,076	0.5	3.3
14	12.4	114	315	12	64	36	130	0.9	3.2
25	53.8	232	375	51	70	100	149	0.6	0.8
29	131.1	357	4,650	88	707	163	1,684	0.4	3.9
33	44.0	206	1,090	37	196	80	425	0.6	2.9
38	93.0	425	4,350	152	629	241	1,542	0.8	5.1
45	111.0	480	3,900	176	575	277	1,394	0.8	3.8
58	70.0	284	1,900	74	235	134	634	0.6	2.8
73	44.5	225	915	45	121	92	313	0.6	2.1
78	30.0	143	1,390	17	175	47	467	0.5	4.7
86	25.0	211	800	44	136	88	304	1.1	3.7

Exhibit IV.2 (continued)

COSTS TO INDIRECTLY DISCHARGING PETROLEUM REFINERIES
OF CONFORMING TO REVISED BATEA GUIDELINES

Refinery Code	Crude Oil Distillation Capacity	Capital Costs		Operating Costs		Annualized Costs			
						Total		Unit	
		Opt 1	Opt 2	Opt 1	Opt 2	Opt 1	Opt 2	Opt 1	Opt 2
	(1000 bpd)	(1000 $)		(1000 $/year)		(1000 $/year)		(cents/barrel)	
CRACKING CONFIGURATION (CONTINUED)									
111	66.0	470	2,450	213	309	312	824	1.4	3.8
114	24.0	0	683	0	130	0	273	0	3.5
130	5.4	0	1,310	0	473	0	748	0	42.2
142	63.0	216	2,450	38	309	83	824	0.4	4.0
143	44.0	0	2,190	0	262	0	744	0	5.2
175	165.0	972	13,300	701	2,892	905	5,685	1.7	10.5
182	324.5	1,000	7,000	354	1,061	564	2,531	0.5	2.4
188	100.0	500	3,660	202	486	307	1,255	0.9	3.8
200	29.3	285	1,150	91	152	151	394	1.6	4.1
203	335.0	1,062	13,800	382	2,062	605	4,960	0.6	4.5
224	20.0	0	655	0	138	0	276	0	4.2
225	40.4	0	2,220	0	266	0	732	0	5.5
228	25.0	216	710	40	140	85	289	1.0	3.5
229	5.6	98	242	13	35	34	86	1.8	4.7
Subtotal	2,055.0	8,116	77,305	2,941	12,481	4,645	28,739		
LUBRICATING OIL CONFIGURATION									
220	10.0	0	258	0	67	0	121	0	3.7
Grand Total Indirect	2,401.6	9,591	84,807	3,163	14,432	5,175	32,267		

Exhibit IV.3

SUMMARY OF COSTS TO PETROLEUM REFINERIES
OF CONFORMING TO REVISED EFFLUENT DISCHARGE GUIDELINES

	Crude Oil Distillation Capacity	Capital Costs	Operating Costs	Annualized Costs	
				Total	Unit
	(1000 bpd)	(1000 $)	(1000 $/year)	(1000 $/year)	(cents/barrel)
DIRECT DISCHARGERS					
Level 1	14,142	19,281	3,678	7,730	0.2
Level 2	14,142	112,956	24,985	48,703	1.0
INDIRECT DISCHARGERS					
Option 1	2,402	9,591	3,163	5,175	0.7
Option 2	2,402	84,807	14,432	35,267	4.1

Exhibit IV.4

COSTS TO A NEW PETROLEUM REFINERY*
OF CONFORMING TO REVISED EFFLUENT DISCHARGE GUIDELINES

	Capital Costs	Operating Costs	Annualized Costs	
			Total	Unit
	(1000 $)	(1000 $/year)	(1000 $/year)	(cents/barrel)
DIRECT DISCHARGE (NSPS)§				
Level 1	0	0	0	0
Level 2	75	218	234	0.4
INDIRECT DISCHARGE (PSNS)†				
Option 1	260	140	195	0.3
Option 2	5,800	2,230	3,450	5.5
NO AQUEOUS DISCHARGE§				
	9,500	1,880	3,875	6.2

* Based on 171,000 barrels per day annual average throughput.

§ Costs are additional above current NSPS (BADT).

† Costs are additional above current pretreatment guidelines for existing refineries.

Chapter V

ECONOMIC IMPACT ANALYSIS WITH HIGH LEVEL OF PROTECTION AGAINST PETROLEUM PRODUCT IMPORTS

It was established in Chapter III that either of two levels of protection against refined petroleum product imports might have been reasonably expected to be in place in 1984. In this chapter, a high level of protection was assumed. Specifically, the level was high enough to support growth of U.S. domestic refinery capacity at about the same rate as the rate of growth of consumption of petroleum products. In this situation, the market would have cleared at prices determined by the full cost of products manufactured in new facilities.

A. Price Effects of Revised Guidelines

If new refinery capacity is to be built, the entire plant must earn an adequate rate of return. This includes the effluent-treating facilities. Consequently, prices with revised new source guidelines will be higher by an amount equal to the full annualized cost of the facilities needed to achieve them. The costs are:[1]

Direct dischargers (NSPS)	
Level 1	no cost
Level 2	0.009 cents per gallon refined product
Indirect dischargers (PSNS)	
Option 1	0.007 cents per gallon refined products
Option 2	0.13 " " " " "
No aqueous discharge	0.15 cents per gallon refined product

---

[1] Costs are from Chapter IV, Exhibit 6 divided by 0.94, the approximate fractional yield of products from crude oil in new refineries.

There was no way to estimate which of the above four options, in fact, would have turned out to be associated with the price-determining (market clearing) refinery at any specific time. All that could be concluded was that the price effect of revised new source guidelines would have ranged from zero to 0.15 cents per gallon of product manufactured (stated in 1977 purchasing power).

B. Financial Effects

This chapter assumed that new refineries would be fully compensated for all costs by tariff protection. Consequently, revised new source guidelines, by premise, had no financial effect on new refinery capacity.

For existing refineries, the financial impact of revised guidelines would have been the difference between the benefits associated with higher product prices caused by revised new source guidelines, and the costs associated with meeting revised guidelines for existing sources. As developed above, the benefits might have been as low as zero or as high as 0.15 cents per gallon of refined product. Existing refineries would process roughly 5,435 million barrels per year of crude oil.[1] So the annual benefit to existing refineries from revised new source guidelines might have been as low as zero or as high as 340 million dollars per year.[2]

The total annualized cost to existing refineries of revised guidelines for existing sources would range from 13 million dollars per year (BATEA Level 1 and PSES Option 1) to 81 million dollars per year (BATEA Level 2 and PTES Option 2).[3] So the net financial effect on existing refineries of revised guidelines might have been as adverse as a cost of (zero minus 81 =) 81 million dollars

---

[1] Chapter IV, Exhibit IV.3: (14.142 + 2.402) million barrels per day x 0.9 operating ratio x 365 days per year.

[2] 5,435 million barrels per year x 0.062 dollars per barrel crude oil processed = 340 million dollars per year.

[3] Chapter IV, Exhibit IV.3.

per year or as beneficial as a revenue increase of (340 minus 13 =) 327 million dollars per year.

C. Production Effects

This chapter was based on a premise of protection against imports sufficiently high to support growth of U.S. domestic refinery capacity. Hence "by definition" there could be no production impacts of revised new source guidelines on new refineries. Whether or not revised existing source guidelines had an impact depended on how much the condition of the industry would change from its current status if a high protection policy were to be implemented.

New refinery capacity[1] required a difference between product sales revenue and raw material acquisition cost of about three dollars per barrel of crude oil processed[2] to justify its construction. During 1978 the difference between revenue and raw material was approximately 2.3 dollars per barrel.[3] Thus, the gap between 1978 conditions and a high protection policy was 0.7 dollars per barrel crude oil processed. This improvement in condition was greater than the highest cost estimated for conforming an existing refinery to revised guidelines: 0.42 dollars per barrel.[4] So the combination of high protection and revised guidelines would have left the highest cost-to-conform refinery better off than in 1978 by roughly 0.28 dollars per barrel of crude oil processed. Clearly, there would be no production effects of revised guidelines if a high protection policy was implemented.

---

[1] Size and configuration as outlined in Chapter IV, Section B.

[2] Sobotka & Co., Inc., Capital and Operating Costs for Grass Roots Refineries with Several Different Process Unit Configurations, Department of Energy Contract No. EJ-78-C-01-2834, Task No. 10, April 12, 1979.

[3] Chase Manhattan Bank, The Petroleum Situation, March 1979.

[4] Chapter IV, Exhibit 4, Refinery 130.

D. Employment Effects

Given high protection, no jobs would be lost in the U.S. petroleum refining industry because of revised effluent guidelines. New jobs would have been created by revised guidelines. New effluent-treating facilities would have needed to be operated, maintained, and supervised. It was possible to develop rough estimates of employment from the data prepared by Effluent Guidelines Division. The estimates were:

	New Jobs
Existing Direct Dischargers	
Level 1	40
Level 2	600
Existing Indirect Dischargers	
Option 1	10
Option 2	250

Hence, new employment could have ranged from 50 to 850 jobs, depending on which combination of Level/Option was chosen for implementation.

E. Community and Balance of Trade Effects

Given high protection, revised effluent guidelines were expected to have no community or balance-of-trade effects.

Chapter VI

ECONOMIC IMPACT ANALYSIS WITH LOW LEVEL OF PROTECTION AGAINST PETROLEUM PRODUCT IMPORTS

It was noted in Chapter II that either of two levels of protection against refined product imports might have been expected to be in place in 1984. In this chapter, a low level of protection was assumed. Specifically, the level was such that the capacity of the industry would remain roughly constant during the period 1979-1990. Of course, there would be some shifting of capacity as inefficient and/or poorly located plants were abandoned while efficient and/or well-located plants expand modestly by "debottlenecking" existing facilities. In this situation, the market would clear at prices determined by the costs of imports (including the cost of tariffs, if any).

A. Price Effects

Market prices for petroleum products will be determined by the costs of imports. Import costs would be unaffected by U.S. effluent guidelines. So there would be no price effects of revised guidelines.

B. Financial Effects

Because petroleum product prices would be unaffected by revised guidelines, the costs of revised guidelines would have been absorbed by the petroleum refining industry. The total costs of revised guidelines to the existing industry were shown in Exhibit IV.3 and are repeated here. The costs for a "model" new source were shown in Exhibit IV.4.

	Capital Costs (1000 $)	Operating Cost (1000 $/year)	Annualized Costs Total (1000 $/year)	Annualized Costs Unit (cents/barrel)
Direct Dischargers				
Level 1	19,281	3,678	7,730	0.2
Level 2	112,956	24,985	48,703	1.0
Indirect Dischargers				
Option 1	9,591	3,163	5,175	0.7
Option 2	84,807	14,432	32,267	4.1

These were small costs compared to other cost elements incurred by refineries, e.g., raw material cost was about 14 dollars per barrel, cash operating costs ranged from 0.50 to 2 dollars per barrel, and capital charges ranged from 0.50 to 3 dollars per barrel. It was concluded that revised guidelines would have a negligible impact on the financial status of the industry as a whole.

C. Production Effects

Although the average cost of revised guidelines would be small, there were some refineries that would have faced significant cost increases. If such costs were sufficiently high, refiners would have been better off shutting down than incurring the costs. It was the purpose of this section to identify high-cost refineries and to judge whether or not they were likely to shut down.

A reasonable minimum value for judging the significance of conformance cost was one-tenth cent per gallon, or 4.2 cents per barrel. One-fourth cent per gallon is the usual increment by which price quotes for almost all products are changed. Also, it was essentially impossible to measure unit manufacturing costs within one-tenth cent per gallon, because product volume measurement was not sufficiently accurate.

The 27 refineries with revised-guideline costs greater than 4.1 cents per barrel of crude oil processed were listed in Exhibit VI.1.

C.1 Values of Existing Refineries. As was stated in Chapter III, the value of an asset to an investor is the present value of its expected future cash flow. Of course, no one can compute the present value with certainty because all the facts required for the computation lie in the unknown future. But it is possible to infer present values from actions that informed investors are taking. For example, if several informed investors decided independently to invest in new catalytic cracking capacity, it was reasonable and useful to assume that they expected the present value of future cash flow from new catalytic cracking units to equal (or exceed) the cost of such units. Conversely, if existing crude oil distillation capacity in the world was more than adequate to meet forecast 1990 needs, it was reasonable and useful to assume that competition would have restricted cash flow from less efficient crude units to zero; and no unit would have come anywhere near generating a cash flow commensurate with its replacement costs.

In the following paragraphs, estimates of the values of new processing units were developed. Except where otherwise indicated, evidence of new construction was based on listings in Hydrocarbon Processing, February 1979, and/or Oil and Gas Journal, May 7, 1979. Construction costs of new processing units (stated in dollars of 1977 purchasing power), were from Sobotka & Co., Inc., op. cit., April 12, 1979. Adjustments for unit capacity and age were developed after unit values are derived.

C.1.a Conversion processes and catalytic reforming. In 1979, many units of each of these processes were under construction. This established that many different investors had concluded that acceptable rates of return could be expected from investments in such units. For consistency with the annualized costs computed for revised guidelines (Exhibit IV.1) it was assumed that a discounted cash flow rate-of-return of twelve percent per year was "acceptable." The expected annual before-tax cash flow from such new units, then, was 21 percent of capital cost. Expected before-tax cash flows from new large conversion and reforming units are

Exhibit VI.1

EXISTING REFINERIES WITH ANNUALIZED COST TO CONFORM TO REVISED GUIDELINES OF MORE THAN 4.1 CENTS PER BARREL OF CRUDE OIL PROCESSED

Refinery Code	Crude Oil Distillation Capacity (1000 bpd)	Configuration*	Discharge Mode§	Compliance Costs (cents/barrel) Lev/Opt	Lev/Opt 2
130	5.4	C	I		42.2
195	1.0	T	I		35.7
231	10.0	T	I		20.0
154	5.5	L	D		11.9
193	3.2	T	I	2.0	11.1
175	165.0	C	I	1.7	10.5
128	3.0	T	I		10.0
12	4.5	L	D		9.3
126	46.0	C	D	0.6	9.3
173	3.5	L	D	4.3	9.0
174	7.1	L	D	1.8	7.5
145	5.2	T	I	1.3	6.9
110	6.0	T	I		6.1
266	5.9	T	D	2.1	5.9
52	4.0	A	D		5.8
225	40.4	C	I		5.5
177	7.6	L	D	2.2	5.3
143	44.0	C	I		5.2
38	93.0	C	I	0.8	5.1
78	30.0	C	I	0.5	4.7

* As defined in Chapter III: T = topping, A = asphalt, R = reforming, C = cracking, and L = lube.

§ Direct or Indirect

Exhibit VI.1 (continued)

EXISTING REFINERIES WITH ANNUALIZED COST TO CONFORM TO REVISED GUIDELINES OF MORE THAN 4.1 CENTS PER BARREL OF CRUDE OIL PROCESSED

Refinery Code	Crude Oil Distillation Capacity (1000 bpd)	Configuration*	Discharge Mode§	Compliance Costs (cents/barrel) Lev/Opt	Lev/Opt 2
229	5.6	C	I	1.8	4.7
146	4.9	C	D	2.4	4.5
203	335.0	C	I	0.6	4.5
129	5.0	C	D	2.3	4.4
122	107.0	C	D	0.6	4.3
87	5.2	R	D	2.3	4.2
224	20.0	C	I		4.2

* As defined in Chapter III: T = topping, A = asphalt, R = reforming, C = cracking, and L = lube.

§ Direct or Indirect

Process	Capacity, Thousand (barrels/day)	Total Cost * (million 1978 $)	Expected Annual Cash Flow: Total (million $)	Expected Annual Cash Flow: Unit § ($/barrel/day cap.)
Catalytic cracking	55	127	26.7	485
Alkylation	20 §	61	12.8	640
Hydrocracking	45	126	26.5	590
Thermal cracking †	20	27	5.7	285
Delayed coking	20	40	8.4	420
Catalytic reforming (including naphtha desulfurization)	35	83	17.4	500

* Including offsite and associated costs.

§ Thousand barrels per day of product.

† Estimated.

C.1.b Lubricating oil manufacture. The operation of this complex combination of processes created substantial cash flow. Since World War II,[1] lubricating oil manufacture had generated a before-tax cash flow ranging between two and four dollars per barrel manufactured.[2] Also, the demand facing U.S. and free world lubricating oil manufacturers was growing at least as rapidly as is manufacturing capacity.[3] Consequently, a continuation of before-tax cash flows at historical levels seemed assured for many years. On the same basis as tabulated above, the expected annual cash flow from lubricating oil manufacture was about 1,200 dollars per barrel of calendar day capacity.[4]

---

[1] With the exception of the Arab oil boycott of 1973 and 1974.

[2] R.F. Sommerville, Hydrocarbon Processing, August 1977, p. 127.

[3] Ibid.

[4] ($3.00 per barrel x 365 days per year)/0.9 capacity utilization.

C.1.c Crude oil distillation. There existed in 1978 a large worldwide surplus of crude oil distillation capacity.[1] Consequently, in the absence of tariff or quota protection, the only cash flow that would have been expected from a large new crude unit would have been a reduction in company income taxes due to tax depreciation of the new unit. This amounted to 3.5 percent of capital cost, which was about fifteen dollars per year per barrel of calendar day capacity (for a 150,000 barrel per day unit).[2]

Small crude oil distillation units owned by small refiners were in a different situation in 1978. Such units received an outright subsidy from the federal government via the "entitlements" system. The amounts of the subsidy were:[3]

Company Refining Capacity (thousand barrels per day)	Subsidy (cents per barrel)
below 10	96
10 - 30	53
30 - 50	28
50 - 100	9

This study assumed that the subsidy would be negligible by 1984.

C.1.d Adjustments for size and age of process units. All else equal, a small process unit would cost more to build, per barrel of capacity, than a large unit. It follows that, if they were to be economical to build, small units must also have generated more cash flow per barrel than large ones. But this logic was overlooked here. Rather, all units of a given process, regardless of size, were assumed to generate the same annual cash flow per barrel of capacity. This assumption may have understated the value of small units. But

---

[1] Oil and Gas Journal, June 12, 1978, p. 40.

[2] Capital cost about sixty million dollars.

[3] Oil and Gas Journal, May 9, 1979, p. 48.

it seemed better to risk overstating the impact of revised guidelines (by understating the value of affected refineries) than to risk understating them.

All else equal, an old process unit was less valuable than a new one of the same size and capability, both because a new unit was expected to generate cash for more years than an old one, and because a new unit should have costed less to maintain.

It was difficult to judge the remaining life of a process unit. For example, there were more than a dozen catalytic cracking units that were first built in 1944 and 1945 that had been so thoroughly rebuilt and modernized that they were almost as efficient as brand new units, despite 33 years of operation. Nevertheless, it was appropriate to recognize old units are not as valuable as new ones. A useful way to account for this lower value was to utilize lower values for the annual cash flow estimates that were tabulated in Sections C.1.a and b. above. A reasonable factor is one-half. That is, the average annual cash flow expected from an "old" unit over the next, say, thirty years was one-half that expected from a new unit.[1]

From the above and, for convenience, averaging the costs of processes of nearly equal value, the following estimates were used for computing the value of an existing refinery:

---

[1] This is equivalent to estimating that the old unit will last for six years and the new unit for thirty: The present value of an annuity of $1 per year for 6 years at 12 percent per year is $4.3. The present value of an annuity of $1 per year for 30 years at 12 percent per year is $8.5.

Process	Expected Annual Cash Flow, ($/barrel/day capacity)
Lubricating oil	600
Alkylation	300
Hydrocracking	300
Catalytic reforming (including naphtha desulfurization)	250
Catalytic cracking	250
Delayed coking	200
Thermal cracking	150
Crude oil distillation	10

C.1.e Asphalt manufacture. This process was not included in the above table, because in contrast to other refinery processes, the value of most asphalt manufacturing facilities was determined predominantly by the level and relative location of roadbuilding activity. If roadbuilding activity was strong (so that the asphalt plant is operating near capacity) and located nearby (so that the plant has a shipping cost advantage over its competitors) the plant generated a high cash flow. On the other hand, sporadic roadbuilding activity located well away from the plant might have led to essentially no cash flow.

For these reasons, the asphalt refinery listed in Exhibit VI.1 was evaluated on the basis of implied roadbuilding activities rather than on process unit value.

C.2 Guidelines Cost Versus Refinery Value. In Exhibit VI.2, the values and revised guidelines compliance costs for the 26 non-asphalt refineries listed in Exhibit 7 were compared. Costs and values were stated on an annual basis. Compliance costs are from Exhibit IV.1; values were computed by multiplying process unit capacities reported by the refineries in their replies to the "Section 308 Questionnaire" times the estimated annual per-barrel cash flows tabulated in Section C.1.d. above.

Exhibit VI.2 has shown that nineteen refineries had expected cash flows from their process units that were substantially greater than the cash flows required to meet revised guidelines. These plants clearly would have been willing to conform to revised guidelines in order to preserve their cash flow. The remaining seven (non-asphalt) refineries had Level 2 or Option 2 compliance costs greater than their process unit values. All of these refineries were of "topping" configuration.

C.3 Evaluation of High Cost Refineries. The seven topping refineries are discussed individually in order of refinery code number. Then the asphalt refinery is discussed.

C.3.a Refinery 110 was located in Michigan about 125 miles northwest of Detroit. This plant faced revised guideline costs (indirect, Option 2) of six cents per barrel crude oil processed, compared to an estimated process unit value of six cents per barrel.

Refinery 110 began operating before 1970.[1] The plant sold one-tenth of its 1976 output as gasoline, and one-quarter as military jet fuel.[2] The principal competition for gasoline and fuel oil sales comes from a forty thousand barrel-per-day cracking refinery located about fifteen miles away.

It appeared that the future of Refinery 110 was independent of revised guideline costs. If a small refiner subsidy had been maintained, even at a low level, this plant most probably would have been willing to incur revised guideline costs and keep operating. But, without such a benefit, the refinery had little or no value and might have chosen to shut down. (However, the plant operated in the early 1970s without subsidy.) Revised guideline costs did not appear to be large enough to significantly influence the decision of whether or not to shut down.

---

[1] U.S. Bureau of Mines, Petroleum Refineries in the United States and Puerto Rico, published annually.

[2] Reply to Section 308 questionnaire.

Exhibit VI.2

COMPARISON OF PROCESS UNIT VALUES
VERSUS COST TO CONFORM TO REVISED GUIDELINES

	Process Unit Capacity								Estimated Annual Cash Flow			
Refinery Code	Crude Oil	Lube Oil	Alkylation	Hydrocracking	Catalytic Reforming	Catalytic Cracking	Coking	Thermal Cracking	From Process Unit Values	To Revised Guidelines Cost	Value Minus Cost	Process Unit Value Minus Revised Guidelines Cost
	(1000 barrels per day)									(1000 $)		(cents/barrel)
130	5.4				1.0	2.1			883	748	135	8
195	1.0								20	117	(97)	(30)
231	10.0								200	655	(455)	(14)
154	5.5	1.0							710	215	495	27
193	3.2								64	117	(53)	(5)
175	165.0	17.0	12.0		45.0	75.0			47,100	5,685	41,415	76
128	3.0								60	99	(39)	(4)
12	4.5	2.0							1,290	138	1,152	78
126	46.0		3.4	4.6	14.5	19.2	5.2		12,785	1,400	11,385	75
173	3.5	1.7			1.2				1,390	103	1,287	112
174	7.1	2.5			2.1				2,167	176	1,991	85
145	5.2								104	117	(13)	(1)
110	6.0								120	120	0	0
266	5.9								118	114	(4)	0

Exhibit VI.2 (continued)

COMPARISON OF PROCESS UNIT VALUES
VERSUS COST TO CONFORM TO REVISED GUIDELINES

	Process Unit Capacity								Estimated Annual Cash Flow			
Refinery Code	Crude Oil	Lube Oil	Alkylation	Hydrocracking	Catalytic Reforming	Catalytic Cracking	Coking	Thermal Cracking	From Process Unit Values	To Revised Guidelines Cost	Value Minus Cost	Process Unit Value Minus Revised Guidelines Cost
	(1000 barrels per day)									(1000 $)		(cents/barrel)
225	40.4		3.8			18.0			6,448	732	5,716	43
177	7.6	1.4							992	133	859	34
143	44.0				11.5	19.0			8,505	744	7,761	54
38	93.0		8.6		21.0	40.0	37.0		27,090	1,542	25,548	84
78	30.0		2.6		5.0	11.5	4.0		6,303	467	5,836	59
229	5.6					4.6			1,262	86	1,176	64
146	4.9				2.0			1.1	763	72	691	43
203	335.0	8.8	12.0	29.0	102.0	140.0	27.0		90,180	4,960	85,220	77
129	5.0				0.1			2.2	455	72	383	23
122	107.0		4.5		14.0	41.0	11.0		19,440	1,518	17,922	51
87	5.2				1.0				354	72	282	17
224	20.0					3.5			1,275	276	1,000	15

C.3.b Refinery 128 was located in Northeastern Montana. This plant faced revised guideline costs (indirect, Option 2) of ten cents per barrel crude oil processed, compared to an estimated process unit value of six cents per barrel.

Refinery 128 began operation before 1970. It changed ownership in 1977[1] and the new owners increased capacity from 3,000 to 4,500 barrels per day during 1978.[2] During 1976, forty percent of the refinery's outturn was military jet fuel. No gasoline was manufactured.[3] Principal competition for residual fuel oil sales came from another small refinery located about 100 miles east; jet fuel, diesel fuel, and distillate fuel oil competition also arises from a pipeline terminal located about 100 miles south.

This plant was located in a crude oil producing area. The local crude oil gave high yields of jet and diesel fuels. Operations associated with crude oil production and transportation consumed diesel fuel.

It was concluded that this refinery was viable without subsidy. And its strong location, adjacent to both its crude oil supply and markets, made it probable that the owners would have been willing to absorb guideline conformance costs and to continue operations. It was also possible that they might have persuaded their crude oil suppliers to share some of the costs.

C.3.c Refiner 145 was located in Southwest North Dakota. It faced revised guideline costs (indirect, Option 2) of seven cents per barrel of crude oil processed, compared to an estimated process unit value of six cents per barrel.

Refinery 145 began operations in 1974, after the small refiner subsidy program went into effect. The plant processed crude oil produced nearby. It

---

[1] Bureau of Mines/Department of Energy, Petroleum Refineries, op. cit.

[2] Oil and Gas Journal, March 26, 1979, p. 129.

[3] Reply to Section 308 Questionnaire.

manufactured no gasoline or jet fuel in 1976. Principal competition came from a fifty thousand barrel-per-day refinery located about eighty miles east, and from a products pipeline terminal located about ninety miles northwest.

Because of its location, Refinery 145 appeared to be viable as a diesel fuel and fuel oil manufacturer without federal subsidy or tariff protection. It would probably not have been economic to build without subsidy. But, once built, its transportation cost advantage relative to its competition should have enabled it to continue in business. Revised guideline costs did not appear to be high enough to jeopardize its viability.

C.3.d Refinery 193 was located in the Houston, Texas, metropolitan area. It faced revised guideline costs (indirect, Option 2) of eleven cents per barrel crude oil processed, compared to an estimated process unit value of six cents per barrel.

This refinery began operations before 1970. It expanded by about fifty percent after the small refiner subsidy program went into effect. The plant reported an outturn of fifty percent gasoline in 1976. Since it had neither cracking nor reforming facilities, it was assumed that much of the gasoline, perhaps as much as two-thirds, was high-octane blending stocks purchased from nearby refineries. Competition arose from these same refineries; over one million barrels per day of refining capacity was located within thirty miles of Refinery 193.

The estimated conformance costs for this plant included no provision for land. It was understood informally that the plant had such severe space restrictions that the installation of a water treatment facility that required any significant land area could be accomplished only by removing some existing tankage or by purchasing expensive adjacent land. If this information was correct, Refinery 193 was facing higher conformance costs than eleven cents per barrel.

It was not possible to estimate the actual cost for this plant without engineering and real estate data. However, it appeared that this refinery might have chosen to shut down rather than incur revised guideline costs.

C.3.e Refinery 195 was located near San Antonio, Texas. It faced revised guideline costs (indirect, Option 2) of 36 cents per barrel of crude oil processed, compared to an estimated process unit value of six cents per barrel.

Refinery 195 began operations before 1970. The plant manufactured no gasoline or jet fuel in 1976. Principal competition came from two small nearby refineries, and from five nearby pipeline terminals that distributed products refined along the Texas Gulf Coast.

Refinery 195 and its neighbors appeared to have a significant transportation advantage compared to their competitors. Texas crude oil flowed past San Antonio on its way east to Gulf Coast refineries and products flowed back west to San Antonio. However, it seemed doubtful that the advantage was enough to compensate for the high revised-guideline costs.

It was concluded that Refinery 195 would have incurred revised-guideline costs only if federal subsidies to small refiners continued at fairly high levels. Without subsidy, revised guidelines costs apparently would have caused it to choose to shut down.

C.3.f Refinery 231 was located near Salt Lake City, Utah. It faced revised guideline costs (indirect, Option 2) of twenty cents per barrel crude oil processed, compared to an estimated process unit value of six cents per barrel.

This plant began operations in 1973, and expanded from one thousand to ten thousand barrels per day capacity in 1974, after the small refiner subsidy program went into effect. Forty percent of outturn in 1976 was motor gasoline. As was the case for Refinery 193, it could be assumed that much of this product

was high octane blending components procured from one or more of six nearby refineries. These plants were equipped with catalytic cracking and catalytic reforming. Competition for Refinery 231 arose from these same plants.

It appeared that Refinery 231 was an "entitlements refinery," i.e., its existence was dependent on federal subsidy.[1] It was likely that this plant's outturn could have been more economically supplied by minor expansion of one or more of the nearby refineries. If this analysis was correct, the refinery's future was determined by federal subsidy policies rather than revised guidelines.

However, even if the refinery was competively viable without subsidy, revised guideline costs probably would have caused it to shut down. Revised guideline costs faced by every neighboring refinery were less than four cents per barrel.[2] The revised guideline cost disadvantage of over one-half million dollars per year,[3] and the capital requirement of 1.1 million dollars[4] appeared to be too large to face.

C.3.g Refinery 266 was located in Southwestern Michigan, roughly equidistant from Chicago, Detroit, and Toledo, where the nearest refineries were located. This plant faced revised guideline costs (direct, Level 2) of six cents per barrel crude oil processed, compared to an estimated process unit value of six cents per barrel. In 1976 the plant processed mostly Canadian crude oil (transported in the nearby lakehead pipeline) and some local crude oil.[5]

---

[1] However, it must be noted that Refinery 193 in Houston has even less reason to exist, but has been in business for over a decade.

[2] Exhibits IV.1: Refinery 288.

[3] (0.2 - 0.035 cents/barrel) x (10,000 barrels/day capacity) x (0.9 utilization factor) x (365 days/year) = $0.54 million/year.

[4] Exhibit VI.1.

[5] Reply to Section 308 questionnaire.

Refinery 266 began operation before 1970. It expanded to its 1978 capacity, 5,600 barrels per day, during 1974. Refinery 266 manufactured military jet fuel, fuel oils, and a small quantity of leaded motor gasoline.[1] Principal competition was from two pipeline terminals, each located about fifty miles away.

The area around Refinery 266 was well populated and industrialized. It appeared that all of the plant's output was delivered within a radius of twenty or thirty miles. The refinery appeared to have a significant transportation cost advantage over other refineries, perhaps twenty cents per barrel of product. This would have been true regardless of the level of federal protection against imports. So the revised guideline cost was not enough to cause this refinery to cease operation.

C.3.h In summary, the impact of revised guidelines on topping refineries would have depended strongly on the future level of federal subsidies for small refiners. The subsidy level in 1978 for firms processing less than ten thousand barrels per day was about 95 cents per barrel crude oil processed. If the subsidy had continued at even a fraction (one-third?) of this level, revised guideline costs probably would not have caused any refineries to shut down.

If, however, the small refiner subsidy was eliminated, it was anticipated that the following topping refineries might choose to shut down rather than incur revised Option 2 PSES costs. (They would not have been affected by Level 1, Level 2, or Option 1 revised guideline costs.)

Refinery Code	Capacity (thousand barrels per day)	Located Near
193	3.2	Houston
195	1.	San Antonio
231	10.2	Salt Lake City
Total	14.2	

1 Ibid.

C.3.i The asphalt refiner, Code 52, was located at the east end of the panhandle of Florida. It faced revised guideline costs (direct, Level 2) of six cents per barrel crude oil processed.

Refinery 52 began operation before 1970 and increased its capacity from 3,000 barrels per day in 1970 to 5,000 barrels per day by 1974 and to 9,000 barrels per day by 1979. Almost half of 1976 product outturn was asphalt. Some military jet fuel was also manufactured, but no gasoline. Imported Venezuelan crude oil accounted for all raw material requirements.

Because Refiner 52 was located on the Gulf of Mexico, it faced competition from all other Gulf Coast asphalt manufacturers. And when U.S. refiners' crude oil acquisition costs were allowed to equalize with offshore refiners' costs, this plant would again face competition from Caribbean refiners, as it did before the OPEC price increase of late 1973. However, it was important to point out that finished asphalt was much more expensive to ship and to store than asphaltic crude oil. So relatively short distances created significant transportation/storage cost advantage in the asphalt manufacturing industry.

It seemed highly unlikely that Refiner 52 would have been unwilling to incur revised guideline costs. The costs were moderate, the refinery appeared to be well located, and it had sufficient confidence to triple its capacity over the last eight years.

D. Summary of Economic Impacts of Revised Guidelines on Existing Plants

D.1 The analysis indicated that no petroleum refineries were likely to be shut down under the Level 1/Option 1 guidelines. It also identified three small petroleum refiners that, in the absence of a small refiner subsidy, might have elected to shut down rather than to incur revised Option 2 PSES costs. However, if a small refiner subsidy was continued they would have probably incurred the costs and continued operations.

These refineries accounted for one-thousandth, i.e., 0.1 percent, of total industry capacity. Industry output would not have been affected if they shut down.

D.2 Employment Effects. Under Level 1/Option 1 there would have been no employment effects because no petroleum refineries were likely to shut down. It was estimated that 100 to 150 persons were employed in the three small refineries that may have shut down under the Option 2 guidelines.

New jobs would be created by revised guidelines in existing refineries. The new effluent treatment facilities would need to be operated, maintained, and supervised. It appeared that about 50 to 850 jobs would have been created.[1] A net increase of 50 (Level 1/Option 1) to 725 (Level 2/Option 2, net of three shut down refineries) was expected.

D.3 Community Effects. The three refineries that may have shut down were all small employers located in or near metropolitan areas. Hence, no community impacts were expected if the plants did shut down.

D.4 Balance of Trade Effects. No balance of trade effects of revised guidelines were expected.

E. Impacts on New Plants

With no tariff protection compliance costs for new sources (NSPS and PSNS) would have to be absorbed by new sources. However, the magnitude of compliance costs would have negligible impact on the economic viability of new plants.

---

1 Chapter V, Section D.

Chapter VII
LIMITATIONS OF THE ANALYSIS

There are two principal limitations to the analysis presented in this report, the cost data, and the necessity of assuming future federal government policy for protecting domestic refineries.

The estimated costs of conforming refineries to revised guidelines were based on a survey that was conducted in 1976. Twenty-one refineries did not respond to the survey, and several refineries might have altered their actual or planned effluent treatment and flow since then, as well as their size and configuration.

Estimated costs for conforming directly-discharging refineries to revised BAT guidelines, and indirectly-discharging refineries to Option 2 pretreatment guidelines, were based on a flow model. The flow model was derived by statistical analysis of a nonhomogeneous universe: two different types of refineries were subjected to a single analysis: those that complied with existing BPT regulations and those that did not. Moreover, the resulting model stated that the following important refining processes discharge no effluent water at all: catalytic reforming, alkylation, delayed coking, fluid coking, and hydrodesulfurization. Finally, it was assumed by Effluent Guidelines Division that land costs were negligible for all refineries. This probably is not the case.

If costs to conform were increased by twenty percent, the number of refineries with compliance costs greater than 4.1 cents per barrel crude oil processed (Exhibit VI.1) would have increased from 22 to 40. And the number of (non-asphalt) refineries with compliance costs greater than process unit values (Exhibit VI.2) would have increased from five to eight. Two of the added three refineries had already been analyzed in detail because compliance costs and process unit values were equal. The third - Refiner 130 - was quite well located and appeared to enjoy a significant transportation advantage relative to its competition.

At the time this study was made, it was not possible to foresee the dramatic changes that eventually took place in the world and the U.S. petroleum market places. Large price increases significantly reduced consumption. In January 1981, all U.S. petroleum price controls were removed, small refiner subsidies were rescinded and the U.S. industry was given essentially no tariff protection. U.S refining utilization decreased from 89.4 percent of capacity in 1977 to below 70 percent in 1981. Currently (July 1982), the utilization rates is about 71 percent. More than fifty U.S. refineries have discontinued operations since decontrol. Except for modifications in refineries to change output states and to enhance their capabilities to process low valued crude oils, little new process capability is under construction.

If the economic impact analysis were redone in the context of the current economic environment, some changes would be noted. But the impacts on the existing industry would be small. Except as noted above, there currently is essentially no construction of new refining facilities. Consequently, BAT and PSES compliance costs would have to be absorbed by existing refineries.

These costs were generally small compared to the capital values of most existing plants. (The methodology and results of the capital values for existing refineries that were computed in this study are still valid. At that time, crude distillation capacity was assigned little capital value. But most refining downstream processing capability was quite valuable.) This study determined that only three U.S. plants might experience compliance costs that exceeded residual capital values and thus might discontinue operations. All of these were simple refineries not equipped with much downstream processing capability. Of the fifty or so U.S. plants that have shutdown since decontrol, by far the largest number are plants of this type. It is quite likely that the three plants identified as candidates for closure as a result of PSES rules, have already discontinued operations for economic reasons other than PSES compliance costs.

Appendix A

PETROLEUM REFINING PROCESSES AND THE REFINING INDUSTRY

A. Types of Refineries

Crude oils, the primary raw material used in refining, are liquid mixtures of many hydrocarbon-containing chemical compounds. Crude oils differ from one another in the relative concentrations of the various compounds. The physical characteristics of a given crude oil can range from an almost colorless liquid similar to gasoline to a dark viscous material which must be heated to be pumped. Crude oils also contain varying concentrations of nonhydrocarbons, including compounds of sulfur, nitrogen, oxygen and heavy metals. These compounds create problems in the refining process and with product contamination. Sulfur is of principal concern because sulfur compounds can cause severe corrosion to refinery equipment and can be a major source of air pollution.

The purpose of an oil refinery is to process crude oil into various refined fractions and blend those components into the desired finished products. Although a typical oil refinery is technically complex, the manufacturing process is conceptually simple. A refinery consists of a number of modules or units integrated into a processing sequence. Each unit contains equipment to perform a refining or petrochemical operation on crude oil, or on a fraction of the crude, or on a similar substance derived from natural gas. These operations include: separation by fractionation; conversion by chemical reaction, often in the presence of a catalyst, to higher valued products; product treating; and auxillary support facilities for such purposes as utility generation, pollution control, and storage. The actual processing configuration will depend on the characteristics of the crude oil processed and on the desired final product mix. Exhibits A.1 through A.4 show flow charts and product yields of increasingly complex refinery configurations processing a typical light, low sulfur crude.

The configurations are chosen to show that gasoline yield can be increased from zero to at least seventy percent of crude oil processed. Process

Exhibit A.1

FLOW DIAGRAM OF TOPPING REFINERY
PROCESSING LOW SULFUR CRUDE OIL

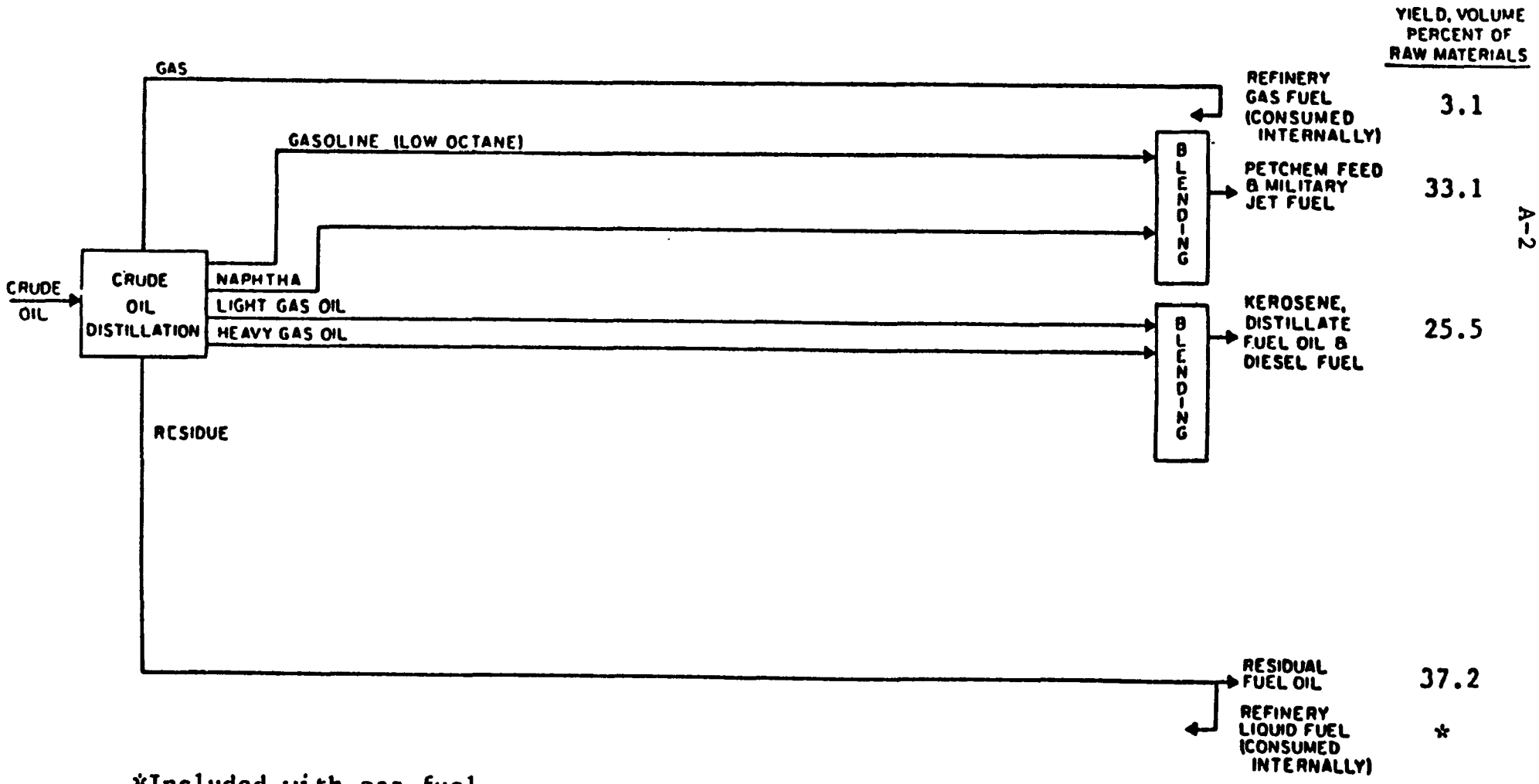

*Included with gas fuel

Exhibit A.2

FLOW DIAGRAM OF HYDROSKIMMING REFINERY
PROCESSING LOW SULFUR CRUDE OIL

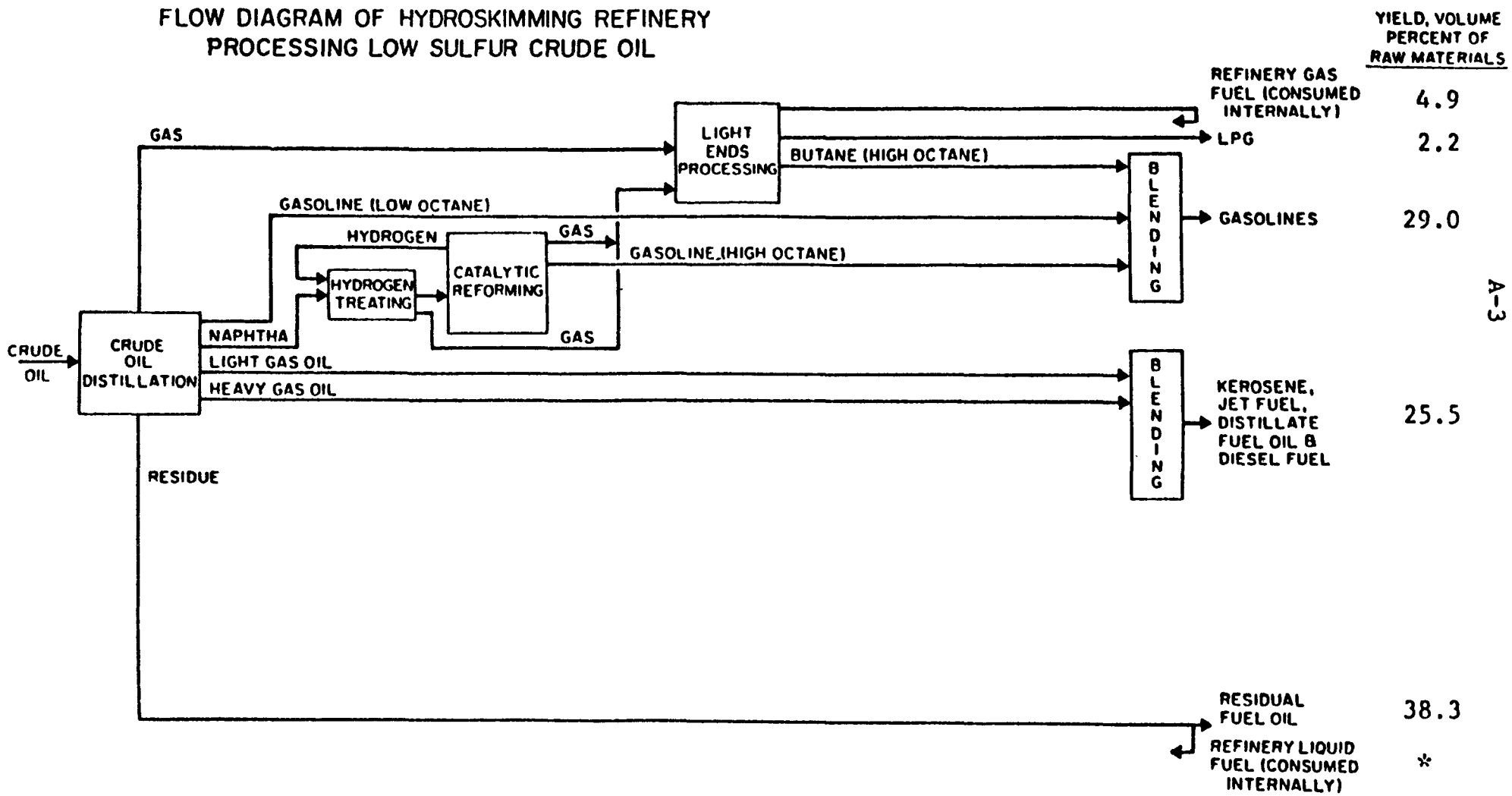

* Included with gas fuel

Exhibit A.3
FLOW DIAGRAM OF FUELS REFINERY
PROCESSING LOW SULFUR CRUDE OIL

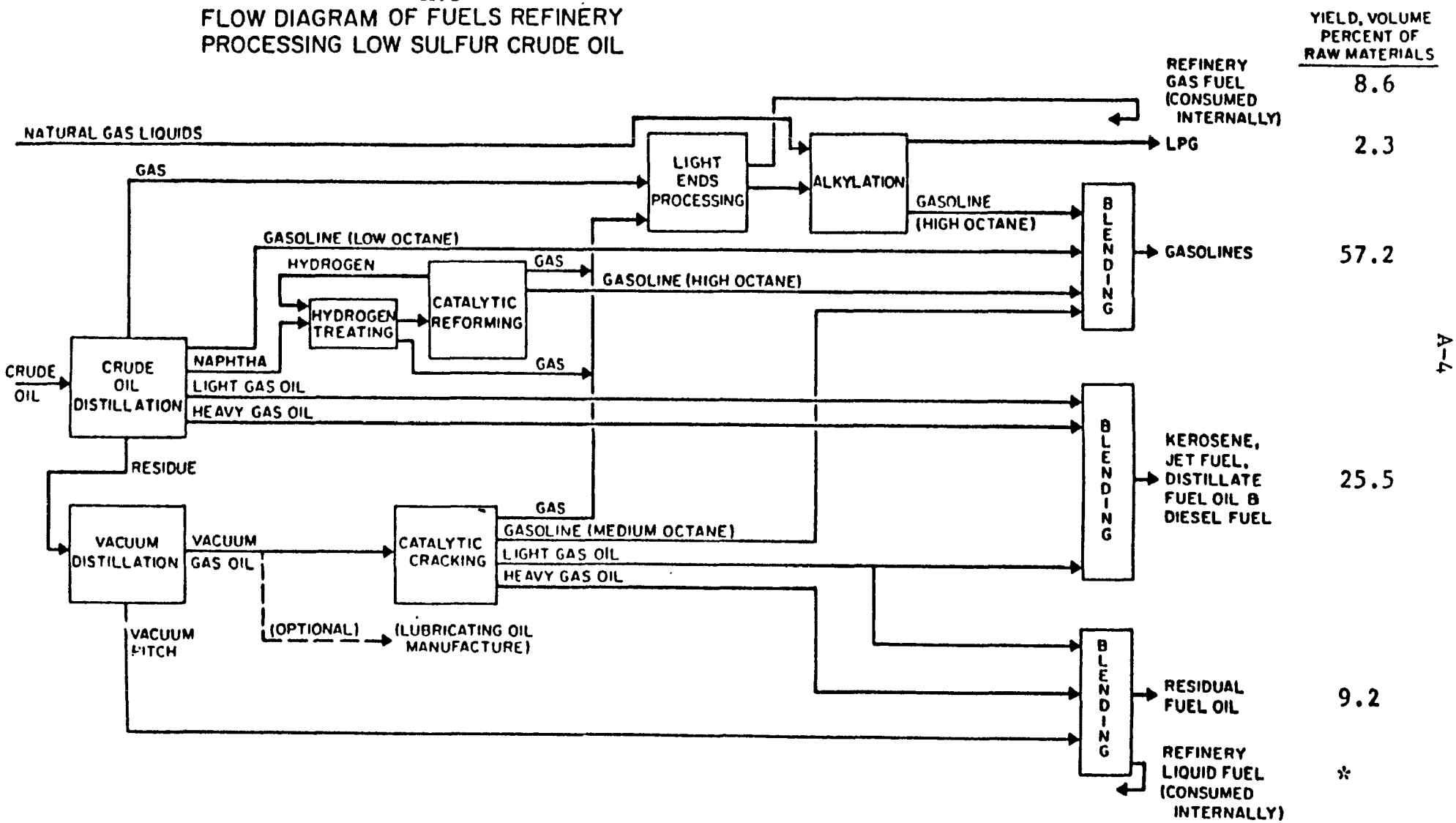

* Included with gas fuel

Exhibit A.4

FLOW DIAGRAM OF HIGH CONVERSION REFINERY PROCESSING LOW SULFUR CRUDE OIL

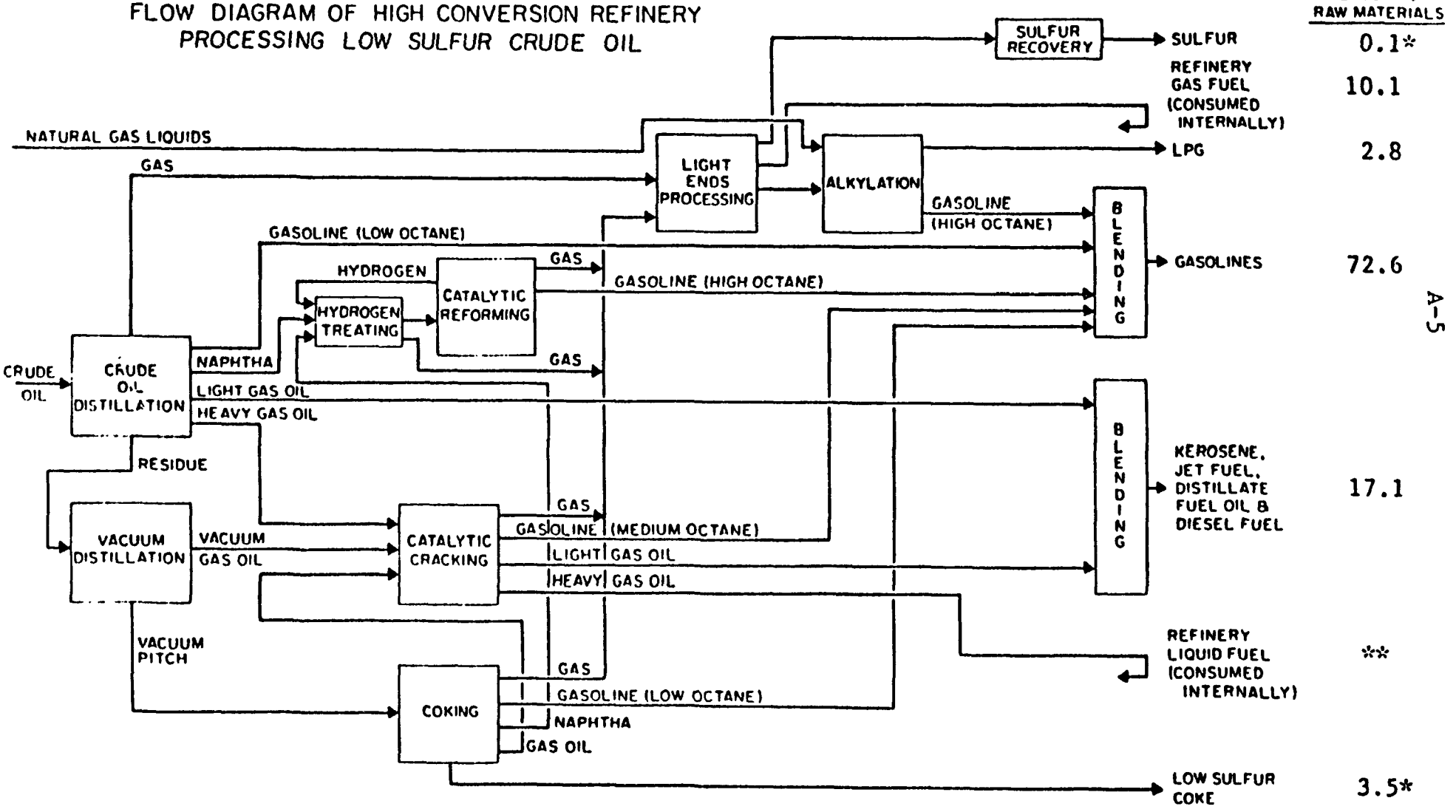

* Percent by weight
** Included with gas fuel

units are successively added to the simplest possible "topping" configuration (Exhibit A.1) as follows:

- Exhibit A.2 (hydroskimming configuration): Catalytic reforming is added to upgrade naphtha from military jet fuel and/or petrochemical feedstock to gasoline.
- Exhibit A.3 (fuels configuration): Catalytic cracking is added to convert about one-half of the Exhibit A.2 residual fuel oil outturn to gasoline. A further fraction of residual fuel oil is converted in catalytic cracking to olefins (propylene and butylenes). These compounds are reacted (alkylated) with isobutane (partly derived from refinery processing and partly purchased from the natural gas processing industry) to make additional gasoline.
- Exhibit A.4 (high conversion configuration): More catalytic cracking and alkylation are added. This increment converts about half of distillate fuel oil to gasoline. Also, coking is added to convert remaining residual fuel oil to coke and (mostly) catalytic cracking feedstock. And catalytic reforming is expanded to accommodate naphtha from coking. This configuration represents a practical maximum of gasoline manufacture. Additional increments are feasible, but uneconomic except in unusual cases.

In addition to configuration, oil refineries can be categorized by size, product mix and type of feedstock which can be processed (high or low sulfur). Exhibit A.5 shows the distribution of U.S. refineries by size and configuration as of January 1, 1982. Refineries with capacity over 120,000 barrels per day account for nearly 60 percent of total U.S. refinery capacity. However, only 44 plants (16 percent) of the total 273 plants are in this size group. The large number of small refineries is comprised of two groups: those located near isolated producing areas or small markets far from alternate product sources; and those which have been built in recent years in response to the government's small refinery subsidy programs and still continue to operate. During 1981 roughly 50 refineries, mainly small inefficient plants, discontinued operations.

Exhibit A.5

U.S. REFINERY CRUDE DISTILLATION CAPACITY AND OPERATIONAL ABILITY MATRIX
(number of plants in each category and
their combined crude distillation capacity)

CRUDE DISTILLATION CAPACITY (barrels per stream day)	OPERATIONAL ABILITY* A Topping 1/	B Hydro-Skimming 2/	C Medium Conversion 3/	D High Conversion 4/	TOTALS
SIZE 1 (0 - 20,000)	63 plants (599,830) V = 44% H = 59% T = 3%	26 plants (255,051) V = 32% H = 25% T = 1%	11 plants (124,760) V = 1% H = 12% T = 0.7%	2 plants (37,814) V = 1% H = 4% T = 0.2%	102 PLANTS (1,017,455) V = 5% H = 100% T = 5%
SIZE 2 (20,0001 - 50,000)	23 plants (692,485) V = 50% H = 27% T = 4%	11 plants (369,205) V = 46% H = 14% T = 2%	32 plants (1,177,342) V = 13% H = 46% T = 6%	9 plants (317,447) V = 4% H = 12% T = 2%	73 PLANTS (2,556,479) V = 14% H = 100% T = 14%
SIZE 3 (50,001 - 120,000)	1 plant (80,000) V = 6% H = 2% T = 0.4%	3 plants (183,526) V = 23% H = 4% T = 1%	32 plants (2,419,693) V = 27% H = 57% T = 13%	18 plants (1,572,323) V = 21% H = 37% T = 8%	54 PLANTS (4,255,542) V = 23% H = 100% T = 23%
SIZE 4 (120,001 - 250,000)			12 plants (1,971,142) V = 22% H = 44% T = 11%	15 plants (2,510,537) V = 33% H = 56% T = 13%	27 PLANTS (4,481,679) V = 24% H = 100% T = 24%
SIZE 5 (250,001+)			9 plants (3,219,948) V = 36% H = 51% T = 17%	8 plants (3,074,684) V = 41% H = 49% T = 17%	17 PLANTS (6,294,632) V = 34% H = 100% T = 34%
TOTALS	85 PLANTS (1,372,315) V = 100% H = 7% T = 7%	40 PLANTS (807,782) V = 100% H = 4% T = 4%	96 PLANTS (8,912,885) V = 100% H = 48% T = 48%	52 PLANTS (7,512,805) V = 100% H = 40% T = 40%	273 PLANTS (18,605,787) V = 100% H = 100% T = 100%

1/ Topping (no further processing)
2/ Hydroskimming (Category 1 plus reforming but no conversion)
3/ Medium conversion (Category 2 plus cracking or coking)
4/ High conversion (Category 2 plus cracking and coking)

* Within each category, three capacity percentages are given:
V = capacity as percent of total vertical column (operation category)
H = capacity as percent of total horizontal column (size category)
T = capacity as percent of total U.S. refinery crude distillation capacity

SOURCE: Oil and Gas Journal, March 22, 1982

The total sulfur content and hydrogen sulfide contained in the crude oil are important determinants of the configuration of a refinery, the equipment metallurgy and the size of the pollution control units needed to control sulfur emissions. In comparing high and low sulfur refineries, the major difference is that the distillate fractions of the high sulfur refineries must be desulfurized prior to blending or further processing. For plants of equal total crude processing capacity, high sulfur refineries will require more capacity in such units as hydrotreating, sour water strippers, acid gas treating plants, sulfur recovery plants and tail gas treating units.

The categorization of U.S. plants in Exhibit A.5 does not reflect differences in sulfur content of crude oils processed. Within most of the size and operational-ability categories distinguished in the exhibit, there are refineries that process exclusively low-sulfur crudes and refineries that process essentially all high-sulfur crudes. But most U.S. refineries process a mix of both low-sulfur and high-sulfur crude oils, so it is difficult to quantify feedstock differences as a useful parameter for categorization.

B. Location of Refineries

As of January 1, 1982, there were 273 refineries in the United States located in 41 states. A large number, however, are concentrated in a few major refining centers located along the California Coast, the Gulf Coast, the East Coast, the Washington Coast and the Chicago area.

Exhibit A.6 provides a summary of the geographic distribution of domestic refineries. Approximately 37 percent of all refineries are located in six major refining centers. Refineries in these areas tend to be large complex facilities with a full complement of downstream processing facilities. These six refining areas provide approximately 64 percent of total crude distillation capacity and 67 percent of cracking capacity.

Exhibit A.6

GEOGRAPHIC DISTRIBUTION OF REFINERIES AND REFINING CAPACITY
as of January 1, 1982

Location	Number of Refineries	Distillation Capacity	Cracking Capacity*
		(thousand barrels per day)	
Texas Gulf Coast	34	4,457	1,501
Lousiana Gulf Coast	21	2,679	968
California Coast	27	2,327	877
New Jersey, Philadelphia, Delaware	8	1,194	465
Chicago Area	5	842	348
Washington Coast	7	412	141
All Other	171	6,690	2,122
TOTAL	273	18,601	6,422

* Includes catalytic cracking, hydrocracking and coking.

SOURCE: Oil and Gas Journal, March 22, 1982.

For the most part, the major refinery centers are located in highly industrialized areas with numerous air emission sources. Many of the large refineries, particularly those along the Gulf Coast, are integrated with or adjacent to petrochemical and chemical plants which rely on the refineries for feedstock. Some major utilities are located near refineries; fuel and utilities are exchanged between nearby plants.

C. Financial Structure of the Industry

It is difficult to analyze the financial structure of the petroleum refining industry using published data. Most major refining firms are part of larger enterprises which are not exclusively, or even primarily, in the refining business. Many of the smaller firms are privately held. Those for which published refining profitability data are available are not typical of the industry.

While profitability of the business as a whole has been subject to some variability, industry earnings have been adequate to attract capital to finance growth and replacement. In recent years about 80 percent of capital requirements of the industries have been met from internal sources. Record profits resulting from rising oil and gas prices have greatly increased resources available to the industry. But U.S. refineries were operating at about 65 percent of capacity in early 1982, a lower capacity utilization level than ever before. At these operating levels, refineries by themselves are not profitable. Several large and small plants have closed recently or have announced plans to do so.

Uncertainties about future product demand make it impractical to provide a detailed estimate of the refining industry's capital requirements for expansion and modernization for the years to come. A review of spending plans for 1982 however, provides some insight into the industry's capital requirements. In 1982 the U.S. petroleum industry plans to spend a record 95.3 billion dollars in domestic activities, and 32 of these U.S. firms plan to spend another

16 billion dollars outside the U.S.[1] About 10 percent of the domestic capital expenditures, roughly 9 to 10 billion dollars, represent planned investments in refineries and chemical plants. A large portion of these expenditures are to maintain the productive capacity of existing plants as they age, and much of the rest will be used to change the mix of products made or to adjust the industry's capacity to produce a mix of feedstocks that is gradually becoming more difficult to process. Essentially no capital is being spent to increase the industry's total capacity to process raw materials. By far the largest portion of the industry's total capital expenditures, about 70 percent, is budgeted for exploration and production.

Refinery employment as a whole has been fairly stable. In 1980 there were approximately 154,000 employees; in 1975, about 153,000; and in 1970, 154,000. About one-third of the people in the industry are skilled workers whose job opportunities at a comparable skill level are dependent on employment in the "process" industries. The other two-thirds are employable in other industries at their present skill levels if job opportunities exist for them.

D. Refining Industry Growth

There are a number of factors which will have significant impacts on the future of the domestic refining industry. The dramatic rise in crude oil prices following the political disruptions in Iran has reduced the level of petroleum demand worldwide from 1977 to 1982. Decontrol of U.S. crude and petroleum products in early 1981 has increased the prices of oil products in the U.S. and opened the domestic market to competition from foreign refineries. Finally, the average world supply of crude oil will become heavier and higher in sulfur content.

---

[1] Oil and Gas Journal, Feb. 15, 1982, p. 59.

These changes will tend to reshape the refining industry. Refinery crude oil runs will be lower than previously projected because of declining demand. At the same time, downstream processing will increase to keep pace with changing demand patterns: total gasoline demand will decline but demand for unleaded gasoline will increase; high quality middle distillate demand (jet and diesel fuel) and certain petrochemical demands will increase; residual fuel demand will decline at a greater rate than other products. While trying to adapt to these changes, refiners will be faced with heavier and higher sulfur crudes.

As a result of these changes refiners will be forced to shut down crude distillation facilities. The refining industry will not require the construction of additional new grassroots plants over the next decade but will still require downstream process expansion. U.S. refinery crude oil runs are projected to increase from current depressed levels (less than twelve million barrels per day) to the intake levels which prevailed in the late 1970s (about fourteen million barrels per day) over the next decade. At the same time, downstream processing will increase to keep pace with changing demand patterns which result in the output of larger percentage yields of light products and the need to process higher sulfur crudes. As a result, refiners will invest in additional facilities for heavy oil conversion, desulfurization and sulfur recovery.

Future processing requirements will be satisfied through modification of existing plants. No new refineries are now being built in the U.S., nor are any likely to be built over the next decade. Very few new refineries have been built in the last decade (except for "entitlement" refineries). This trend should continue due to industry economic considerations and general community resistance toward new refining centers.

Refinery expansions will involve revamping existing equipment, replacing old units with larger more efficient ones, and adding new facilities into the existing flow scheme. Expansions will tend to be concentrated in the larger more efficient refineries, particularly those in major refining centers.

E. Types of Refining Processes

In refining, crude oil is first separated by molecular size into fractions, each of which can be blended directly into final petroleum products or processed further. In the downstream processing operations, the molecular size and structure of petroleum fractions are altered to conform to desired characteristics of refined products. Exhibit A.7 classifies the various refinery processes according to their principal functions. These major processing steps are described briefly below.

Fluid catalytic cracking uses high temperature in the presence of a catalyst to convert or "crack" heavier fractions into lighter products, primarily gasoline and distillates. Feed is brought to process conditions (1000°F and 20 pounds per square inch pressure) and then mixed with a powdered catalyst in a reaction vessel. In the reactor, the cracking process is completed and the hydrocarbon products pass to a fractionating section for separation. Coke is formed on the catalyst as a by-product of the cracking reaction. Coked catalyst is transferred from the reactor to a regenerator vessel where air is injected to burn the coke to CO and CO_2. The regenerator flue gases are passed through cyclones and, sometimes, electrostatic precipitators, to remove entrained catalyst. They are then vented to the atmosphere or sent to a CO boiler where carbon monoxide is burned to CO_2. The regenerated catalyst is returned to the reactor.

Hydrotreating (also known as hydrodesulfurization) is a catalytic process designed to remove sulfur, nitrogen and heavy metals from petroleum fractions. Feed is heated to process temperature (650° to 750°F), mixed with hydrogen and fed to a reactor containing a fixed bed of catalyst. The primary reactions convert sulfur compounds in the feed to hydrogen sulfide (H_2S) and the nitrogen compounds to ammonia. The H_2S and ammonia are separated from the desulfurized product; the H_2S is sent to sulfur recovery facilities.

Catalytic reforming is used to upgrade low-octane naphtha to produce high-octane gasoline blending stocks. The flow pattern is similar to that of

Exhibit A.7

FUNCTIONAL CHARACTERIZATION OF PETROLEUM REFINERY PROCESSES

SEPARATION	ALTERATION (CONVERSION)
A. Separation on the Basis of Molecular Weight	A. Conversion on the basis of Molecular Weight
Distillation (atmospheric and vacuum fractionation of crude oil, naphtha splitting, depropanizing, stabilization)	Thermal cracking (visbreaking, coking)
Absorption (recovery of olefins from catalytic cracked gas, recovery of propane from natural gas or hydrocracked gas)	Catalytic cracking
Extraction (deasphalting of feedstock for lubricating oil manufacture or for catalytic cracking)	Hydrocracking
	Alkylation
	Polymerization
B. Separation on Basis of Molecular Structure	B. Conversion on Basis of Molecular Structure
Extraction (recovery of benzene, toluene and xylenes from catalytic reformate, removal of aromatics from lubricating oil feedstock)	Catalytic reforming (benzene, toluene, and xylene manufacture; and octane improvement)
Crystallization (dewaxing of lubricating oils, recovery of paraxylene from mixed xylenes)	Isomerization (normal butane to iso for alkylation, normal pentane and hexane to iso for octane improvement)

TREATMENT TO REMOVE IMPURITIES

Hydrogen treatment (hydrotreating)

Caustic treatment (Merox, Bender)

Clay treatment (of lubricating oils)

Acid treatment

hydrotreating except that several reactor vessels are used. The required temperature is about 1000°F and pressure about 200 psi. Reforming catalysts are readily poisoned by sulfur, nitrogen or heavy metals and therefore the feed is normally hydrotreated before being charged to the reforming unit.

In hydrocracking the cracking reaction takes place in the presence of hydrogen. The process produces high quality desulfurized gasolines and distillates from a wide variety of feedstocks. The process employs one or more fixed bed reactors and is similar in flow to the hydrotreating process. Process conditions are 800°F and 2000 psi. Like hydrotreating, hydrocracking produces by-product H_2S which is diverted to sulfur recovery.

Coking is another type of cracking which does not employ a catalyst or hydrogen. The process is utilized to convert heavy fuel oils into light products and a solid residue (coke). Feed is brought to process conditions (900°F and 50 psi) and fed to the coking vessel. Cracked products are routed to a fractionation section. Coke accumulates in the vessel and is drilled out about once every day. In one version of the coking process, fluid coking, a portion of the coke is used for process fuel and the balance is removed as small particles.

Acid gas treating and sulfur recovery units are used to recover hydrogen sulfide (H_2S) from refinery gas streams and convert it to elemental sulfur. Sour gas containing H_2S is produced in a number of refinery units, particularly cracking and hydrotreating. In the acid gas treating units, H_2S is removed from the fuel gas by absorbing it in an alkaline solution. This solution, in turn, is heated and steam-stripped to remove the H_2S which is sent to the sulfur recovery unit. In the process, a portion of the H_2S is burned to form SO_2. This reacts with the remaining H_2S to form sulfur and water. Sulfur recovery is high but never 100 percent. The remaining sulfur is incinerated and discharged to the atmosphere or removed by a tail gas treating unit.

The purpose of the tail gas treating unit is to convert any remaining sulfur compounds from the sulfur recovery unit to elemental sulfur. There are

several processes available, the most common of which are the Beavon and SCOT processes. In both processes, sulfur compounds in the sulfur unit tail gas are converted to H_2S. The Beavon process converts H_2S to sulfur through a series of absorption and oxidation steps. The SCOT process concentrates the H_2S and returns it to the sulfur recovery facilities. In both processes, the treated tail gas is virtually free of sulfur compounds when released to the atmosphere.

Appendix B

Cost per pound of pollutant removed

The exhibit below presents a summary of the cost per pound of pollutant removed for each of the options considered. Note that the incremental costs and loadings for existing dischargers are based on industry-wide data, while the new source data is reported on a per plant basis. The values are in dollars per pound of pollutant removed.

Cost per pound of pollutant

PETROLEUM REFINING

Control Option	Annual Cost (000)	Pounds Removed (per year)	($/pound removed)
Proposed BAT1	$ 7,730	73,000	$ 105.10
Proposed BAT2	48,703	114,000	427.22
Revised BAT1 (BAT8)	25,000	75,000	333.33
Revised BAT2 (BAT7)	37,000	112,000	330.35
PSES1A	5,180	90,000	57.55
PSES1B	32,300	333,000	97.00
PSNS	195	90,000	2.16
NSPS1	284	807.5	351.70
NSPS2	284	807.5	351.70
NSPS3	3,875	1,552.9	2,495.33
NSPS4	3,875	1,146.5	3,379.26

☆U.S. GOVERNMENT PRINTING OFFICE: 1982 381-082/331 1-3

U.S. [illegible] Agency
Re[illegible]
230 [illegible] Dearborn Street
Chicago, Illinois 60604